N65928.AR.002553
NTC ORLANDO
5090.3a

BACKGROUND SAMPLING REPORT NTC ORLANDO FL

8/1/1995

ABB ENVIRONMENTAL SERVICES, INC

BACKGROUND SAMPLING REPORT

NAVAL TRAINING CENTER, ORLANDO
ORLANDO, FLORIDA

Unit Identification Code (UIC): N65928

Contract No. N62467-89-D-0317/107

Prepared by:

ABB Environmental Services, Inc.
2590 Executive Center Circle, East
Tallahassee, Florida 32301

Prepared for:

Department of the Navy, Southern Division
Naval Facilities Engineering Command
2155 Eagle Drive
North Charleston, South Carolina 29418

Barbara Nwokike, Code 1873, Engineer-in-Charge

August 1995

This Final Background Sampling Report for the Naval Training Center, Orlando, Florida (dated August 1995) has been prepared under the direction of a Florida-Registered Professional Engineer. The work and professional opinions rendered in this document were conducted or developed in accordance with commonly accepted procedures consistent with applicable standards of practice.

James L. Manning

James L. Manning, P.E.

Professional Engineer No. 36124
Expires February 28, 1997

CERTIFICATION OF TECHNICAL
DATA CONFORMITY (MAY 1987)

The Contractor, ABB Environmental Services, Inc., hereby certifies that, to the best of its knowledge and belief, the technical data delivered herewith under Contract No. N62467-89-D-0317/107 are complete and accurate and comply with all requirements of this contract.

DATE: August 9, 1995

NAME AND TITLE OF CERTIFYING OFFICIAL: James L. Manning, P.E.
Task Order Manager

NAME AND TITLE OF CERTIFYING OFFICIAL: Rick Allen
Project Technical Lead

(DFAR 252.227-7036)

FOREWORD

To meet its mission objectives, the U.S. Navy performs a variety of operations, some requiring the use, handling, storage, or disposal of hazardous materials. Through accidental spills and leaks and conventional methods of past disposal, hazardous materials may have entered the environment in ways unacceptable by today's standards. With growing knowledge of the long-term effects of hazardous materials on the environment, the Department of Defense (DOD) initiated various programs to investigate and remediate conditions related to suspected past releases of hazardous materials at their facilities.

One of these programs is the Base Realignment and Closure (BRAC) Cleanup Program. This program complies with the Base Closure and Realignment Act of 1988 (Public Law (PL) 100-526, 102 Statute 2623) and the Defense Base Closure and Realignment Act of 1990 (PL 101-510, 104 Statute 1808), which require the DOD to observe pertinent environmental legal provisions of the Comprehensive Environmental Response, Compensation, and Liability Act (CERCLA), the 1992 Community Environmental Response Facilitation Act (CERFA), Executive Order 12580, and the statutory provisions of the Defense Environmental Restoration Program (DERP), the National Environmental Policy Act (NEPA), and any other applicable statutes that protect natural and cultural resources.

CERCLA requirements, in conjunction with corrective action requirements under Subtitle C of the Resource Conservation and Recovery Act (RCRA), govern most environmental restoration activities. Requirements under Subtitles C, D, and I, of RCRA, as well as the Toxic Substances Control Act (TSCA), the Clean Water Act (CWA), the Clean Air Act (CAA), the Safe Drinking Water Act (SDWA), and other statutes, govern most environmental mission or operational-related and closure-related compliance activities. These compliance laws may also be applicable or relevant and appropriate requirements (ARARs) for selecting and implementing remedial actions under CERCLA. NEPA requirements govern the Environmental Impact Analysis and Environmental Impact Statement preparation for the disposal and reuse of BRAC installations.

The BRAC program centers on a single goal: expediting and improving environmental response actions to facilitate the disposal and reuse of a BRAC installation, while protecting human health and the environment.

The Southern Division, Naval Facilities Engineering Command (SOUTHNAVFACENGCOM), the USEPA, and the Florida Department of Environmental Protection (FDEP) collectively coordinate the cleanup activities through the BRAC Cleanup Team. This team approach is intended to foster partnering, accelerate the environmental cleanup process, and expedite timely, cost-effective, and environmentally responsible disposal and reuse decisions.

Questions regarding the BRAC program at NTC, Orlando, should be addressed to the Southern Division's BRAC Environmental Coordinator, Mr. Wayne Hansel, Code 18B7, at (407) 646-5294 or Southern Division's Engineer-in-Charge (EIC), Ms. Barbara Nwokike, Code 1873, at (803) 743-0566.

EXECUTIVE SUMMARY

ABB Environmental Services, Inc. (ABB-ES), under contract to the Southern Division Naval Facilities Engineering Command, has prepared this Background Sampling Report to present the results of background sampling at Naval Training Center (NTC), Orlando, under Base Realignment and Closure (BRAC) 1993. All the sampling activities were performed as detailed in the Project Operations Plan (POP) (ABB-ES, 1994a) and the Background Sampling Plan (ABB-ES, 1995). The POP and the Background Sampling Plan were designed to incorporate the requirements of a Quality Assurance Project Plan (QAPP), Health and Safety Plan (HASP), and the elements of a Field Sampling Plan (FSP) related to sampling equipment, procedures, and sample handling and analysis. The POP provided much of the general information and procedures needed to conduct applicable field efforts at NTC, Orlando.

This Background Sampling Report documents the purpose, objectives, and rationale for collecting facility-wide background soil and groundwater samples, and discusses the evaluation and results from the background sampling activities at NTC, Orlando.

Background sampling provides a facility-wide database of background concentrations in soil and shallow groundwater. From the evaluation of sampling results, a list of values per detected analyte is presented to allow for comparison of analytes detected during site investigations and screening. This comparison will enable the support of site characterization and risk evaluations. Site management decisions that follow might include determination that a site needs no further evaluation or becomes part of the Installation Restoration (IR) program. These background analyte values would also support remedial alternative evaluations if sites are carried through the IR program.

TABLE OF CONTENTS

Background Sampling Report
Naval Training Center Orlando
Orlando, Florida

Chapter	Title	Page No.
1.0	INTRODUCTION	1-1
1.1	OBJECTIVES	1-1
1.2	OVERVIEW OF DOCUMENT	1-2
2.0	FACILITY BACKGROUND AND PHYSICAL SETTING	2-1
3.0	SAMPLING PROGRAM	3-1
3.1	SURFACE SOIL	3-1
3.2	SUBSURFACE SOIL AND GROUNDWATER	3-7
4.0	DATA QUALITY ASSESSMENT	4-1
4.1	FIELD QUALITY CONTROL ASSESSMENT	4-1
4.2	LABORATORY DATA QUALITY ASSESSMENT SUMMARY	4-1
4.2.1	Precision	4-2
4.2.2	Accuracy	4-2
4.2.3	Representativeness	4-3
4.2.4	Comparability	4-3
4.2.5	Completeness and Rejected Analytical Data	4-4
5.0	BACKGROUND SAMPLING RESULTS	5-1
5.1	SURFACE SOIL	5-1
5.1.1	Main Base Data Set Surface Soil	5-1
5.1.2	McCoy Annex Data Set Surface Soil	5-6
5.2	SUBSURFACE SOIL	5-6
5.2.1	Main Base Data Set Subsurface Soil	5-11
5.2.2	McCoy Annex Data Set Subsurface Soil	5-11
5.3	GROUNDWATER	5-12
5.3.1	Main Base Data Set Groundwater	5-12
5.3.2	McCoy Annex Data Set Groundwater	5-17
5.4	DATA EVALUATION	5-17
5.4.1	Evaluation of Surface Soil Background Data Sets	5-20
5.4.1.1	Main Base Data Set	5-20
5.4.1.2	McCoy Annex Data Set	5-20
5.4.2	Evaluation of Subsurface Soil Background Data Sets	5-31
5.4.2.1	Main Base Data Set	5-31
5.4.2.2	McCoy Annex Data Set	5-31
5.4.3	Groundwater Background Data Set	5-31
6.0	BACKGROUND COMPARISONS	6-1

TABLE OF CONTENTS (Continued)

Background Sampling Report
Naval Training Center Orlando
Orlando, Florida

Chapter	Title	Page No.
REFERENCES		
APPENDICES		
Appendix A:	Soil Boring Logs	
Appendix B:	Monitoring Well Construction Diagrams	
Appendix C:	Well Development Records	
Appendix D:	Groundwater Sampling Logs	
Appendix E:	Complete Analytical Data Set	
Appendix F:	Population Statistics	
Appendix G:	Precision, Accuracy, Representativeness, Completeness, and Comparability (PARCC) Summary Report	
Appendix H:	Summary of General Statistics	

LIST OF FIGURES

Background Sampling Report
Naval Training Center Orlando
Orlando, Florida

Figure	Title	Page No.
2-1	Facility Locations	2-2
2-2	Main Base	2-3
2-3	Area "C" and Herndon Annex	2-4
2-4	McCoy Annex	2-5
3-1	Soil Classifications and Background Sampling Locations - Main Base	3-4
3-2	Soil Classifications and Background Sampling Locations - Area "C" and Herndon Annex	3-5
3-3	Soil Classifications and Background Sampling Locations - McCoy Annex	3-6

LIST OF TABLES

Tables	Title	Page No.
3-1	Surficial Soil Types	3-3
3-2	Sample Summary and Corresponding Soil Types	3-8
3-3	Monitoring Well Construction Data	3-9
4-1	Rejected Analytical Data	4-5
5-1	Surface Soil, Main Base Data Set	5-2
5-2	Surface Soil, McCoy Annex Data Set	5-4
5-3	Subsurface Soil, Main Base Data Set	5-7
5-4	Subsurface Soil, McCoy Annex Data Set	5-9
5-5	Groundwater, Main Base Data Set	5-13
5-6	Groundwater McCoy Annex Data Set	5-15
5-7	Population Differences, Main Base and McCoy Annex Data Sets	5-19
5-8	Orlando Background Surface Soil, Main Base Data Set	5-21
5-9	Orlando Background Surface Soil, McCoy Annex Data Set	5-23
5-10	Orlando Background Subsurface Soil, Main Base Data Set	5-25
5-11	Orlando Background Subsurface Soil, McCoy Annex Data Set	5-27
5-12	Orlando Background Groundwater	5-29

GLOSSARY

ABB-ES	ABB Environmental Services, Inc.
bls	below land surface
BRAC	Base Realignment and Closure
CAA	Clean Air Act
CERCLA	Comprehensive Environmental Response Compensation and Liability Act
CERFA	Community Environmental Response Facilitation Act
CLP	Contract Laboratory Program
CPC	chemical of potential concern
CWA	Clean Water Act
DDE	dichlorodiphenyldichloroethene
DDT	dichlorodiphenyltrichloroethane
DERP	Defense Environmental Restoration Program
DOD	Department of Defense
DQOs	data quality objectives
EBS	Environmental Baseline Survey
ECBSOPQAM	Environmental Compliance Branch Standard Operating Procedures and Quality Assurance Manual
EIC	Engineer-in-Charge
FDEP	Florida Department of Environmental Protection
FLMCL	Florida Maximum Contaminant Levels
FSP	Field Sampling Plan
ft/bls	feet below land surface
HASP	Health and Safety Plan
HSA	hollow stem auger
ID	identification
IR	Installation Restoration
MCL	Maximum Contaminant Level
μg/kg	microgram per kilogram
μg/ℓ	microgram per liter
mg/kg	milligram per kilogram
mrem	millirem
MS/MSD	matrix spike/matrix spike duplicate
msl	mean sea level
NEESA	Naval Energy and Environmental Support Activity
NEPA	National Environmental Policy Act
NTC	Naval Training Center
PAH	polynuclear aromatic hydrocarbon
PARCC	precision, accuracy, representativeness, completeness, and comparability
PCB	polychlorinated biphenyl

GLOSSARY (Continued)

PCi/L	picocuries per liter
POP	Project Operations Plan
QAPP	Quality Assurance Project Plan
QC	quality control
RBC	risk-based concentrations
RPD	relative percent difference
SDWA	Safe Drinking Water Act
SOP	Standard Operating Procedures
SOUTHNAVFAC-ENGCOM	Southern Division, Naval Facility Engineering Command
SVOC	semivolatile organic compound
TAL	target analyte list
TCL	target compound list
TSCA	Toxic Substances Control Act
TSS	total suspended solids
UIC	Unit Identification Code
USDA	U.S. Department of Agriculture
USEPA	U.S. Environmental Protection Agency
VOC	volatile organic compound

1.0 INTRODUCTION

This Background Sampling Report presents and discusses site-specific data on naturally occurring compounds at the Naval Training Center (NTC), Orlando. The establishment of background concentrations for NTC, Orlando, is coincident with establishment of contaminant concentrations facility-wide. This report addresses the appropriateness of the selected sample locations and the need for establishing background data for other environmental media and determines representative site background concentrations.

1.1 OBJECTIVES. The term "background sample" is defined in the United States Environmental Protection Agency (USEPA) Region IV Environmental Compliance Branch Standard Operating Procedures and Quality Assurance Manual (ECBSOPQAM), February 1, 1991, as "a sample collected from an area, water body, or site similar to the one being studied, but located in an area known or thought to be free from pollutants of concern."

The purpose of the sampling program is to provide a facility-wide database of background concentrations in soil and shallow groundwater. Other environmental media (such as sediment and surface water) may be added to the background sampling program based on the results of site screening investigations. Of particular interest are the natural variations of inorganics (metals) in soil. Inorganics are natural constituents of all soil and, therefore, are detected in all soil samples, and, to a lesser degree, in suspended solids present in all water samples.

Also of concern are concentrations of organics often randomly detected in otherwise natural soils in developed areas. These include isolated pesticides or herbicides which represent residue from past use, but do not necessarily indicate a potential source of contamination, and polynuclear aromatic hydrocarbons (PAHs), which are commonly found in soil along almost any roadside or developed area, as a combustion byproduct. The detection of these compounds does represent background concentrations, as they are not associated with any source area, are generally randomly distributed, and are common in any developed area.

Another group of compounds which may occur both naturally and as contaminants is radionuclides in groundwater and surface water. These compounds do occur naturally in the Orlando area, the source being sediment in the Hawthorn Formation, approximately 50 to 100 feet below land surface (bls) (Lichtler and others, 1968). However, they may also be present as potential contaminants, based on previous analytical results from groundwater samples at the North Grinder Landfill at the Main Base, as well as the landfill at the McCoy Annex Golf Course (Geraghty and Miller, 1986). As with sampling and analysis for inorganics and some organics, the purpose of sampling and analysis for radionuclides is to provide data that can be used to evaluate and identify concentrations resulting from contaminant releases.

These data are essential for site characterization, public health and ecological risk assessment, evaluating remedial alternatives, treatability studies, remedial action, and monitoring.

1.2 OVERVIEW OF DOCUMENT. The planning documents to support the Background Sampling Report for NTC, Orlando, consist of the following:

- Background Sampling Plan (ABB Environmental Services, Inc. [ABB-ES], 1995)

- Project Operations Plan for Site Investigations and Remedial Investigations, NTC, Orlando, (POP), Volume I (ABB Environmental Services, Inc. [ABB-ES], 1994a)

- Project Operations Plan, Volume II Health and Safety Plan (ABB-ES, 1994a)

Together these documents establish the background, rationale, and plans for site investigations. This Background Sampling Report discusses the results of the background sampling activities and includes the following chapters:

1.0 Introduction
2.0 Facility Background and Physical Setting
3.0 Sampling Program
4.0 Data Quality Assessment
5.0 Background Sampling Results

Appendices

A Soil Boring Logs
B Monitoring Well Construction Diagrams
C Well Development Records
D Groundwater Sampling Logs
E Complete Analytical Data Set
F PARCC Summary Report
G Population Statistics
H Summary of General Statistics

2.0 FACILITY BACKGROUND AND PHYSICAL SETTING

NTC, Orlando, is located in Orlando, Florida, and encompasses a total of 2,072 acres within Orange County. NTC, Orlando, consists of four discrete facilities: Main Base, Area "C", Herndon Annex, and McCoy Annex (Figure 2-1). NTC, Orlando, provides recruit training of enlisted personnel and advanced or specialized training for officer and enlisted personnel of the regular Navy and Naval Reserve. In 1993 a bipartisan commission appointed by the President and confirmed by the Senate recommended the closure of NTC, Orlando, in accordance with the Department of Defense Base Closure and Realignment Act (BRAC) of 1990.

The operational history of the four facilities dates back to 1940 and includes operation by the Army Air Corps and the Air Force. The Air Force ceased operations at the Main Base, Area "C," and Herndon Annex in 1968. The property was officially commissioned as the Naval Training Center, Orlando, in July 1968. The Navy acquired McCoy Annex from the Air Force in 1973. A more detailed installation history can be found in the POP, Volume I, Section 1.3 Facility Background (ABB-ES, 1994a).

The Main Base (Figure 2-2) is the largest of the four facilities. It is composed of operational and training facilities. The Main Base occupies 1,095 acres approximately 3 miles east of Interstate 4 and directly north of State Road 50. It is surrounded by urban development, including single- and multifamily housing, schools, and commercial buildings. Herndon Public Airport is approximately 1.5 miles south of the Main Base. There are no industrial facilities adjacent to the Main Base, with the exception of auto repair facilities along Bennett Road on the southwest property line.

Area "C" (Figure 2-3) occupies 46 acres and is located approximately 1 mile west of the Main Base off Maguire Boulevard. Area "C" serves as a supply center for NTC, Orlando, and includes a laundry and dry cleaner and the Defense Reutilization and Marketing Office. It is surrounded by urban development, including single- and multifamily residential developments to the north and south, Lake Druid to the west, and an office park to the east. There are no industrial facilities adjacent to Area "C."

Herndon Annex (Figure 2-3) occupies 54 acres approximately 1.5 miles south of the Main Base. It is located within the confines of the general aviation Herndon Public Airport and on the fringe of a major residential area. Herndon Annex provides research, design, development, testing, evaluation, procurement, fabrication, maintenance, and logistic support for naval training devices and equipment. The Herndon Annex currently includes a computer center, flight-training building, uniform supply warehouse, and office buildings.

McCoy Annex (Figure 2-4) occupies 877 acres and is located 12 miles south of the Main Base. It serves primarily as a housing and community support activity for NTC, Orlando. The Beeline Expressway forms the northern boundary. The Orlando International Airport is directly east of the McCoy Annex. The western boundary of the McCoy Annex is flanked by industrially zoned, sparsely populated property. This zoning allows heavy industry and aviation-related development. The property north of the Beeline and within 0.75 mile of the McCoy Annex is used primarily by businesses directly related to the airport, such as rental agencies, hotels,

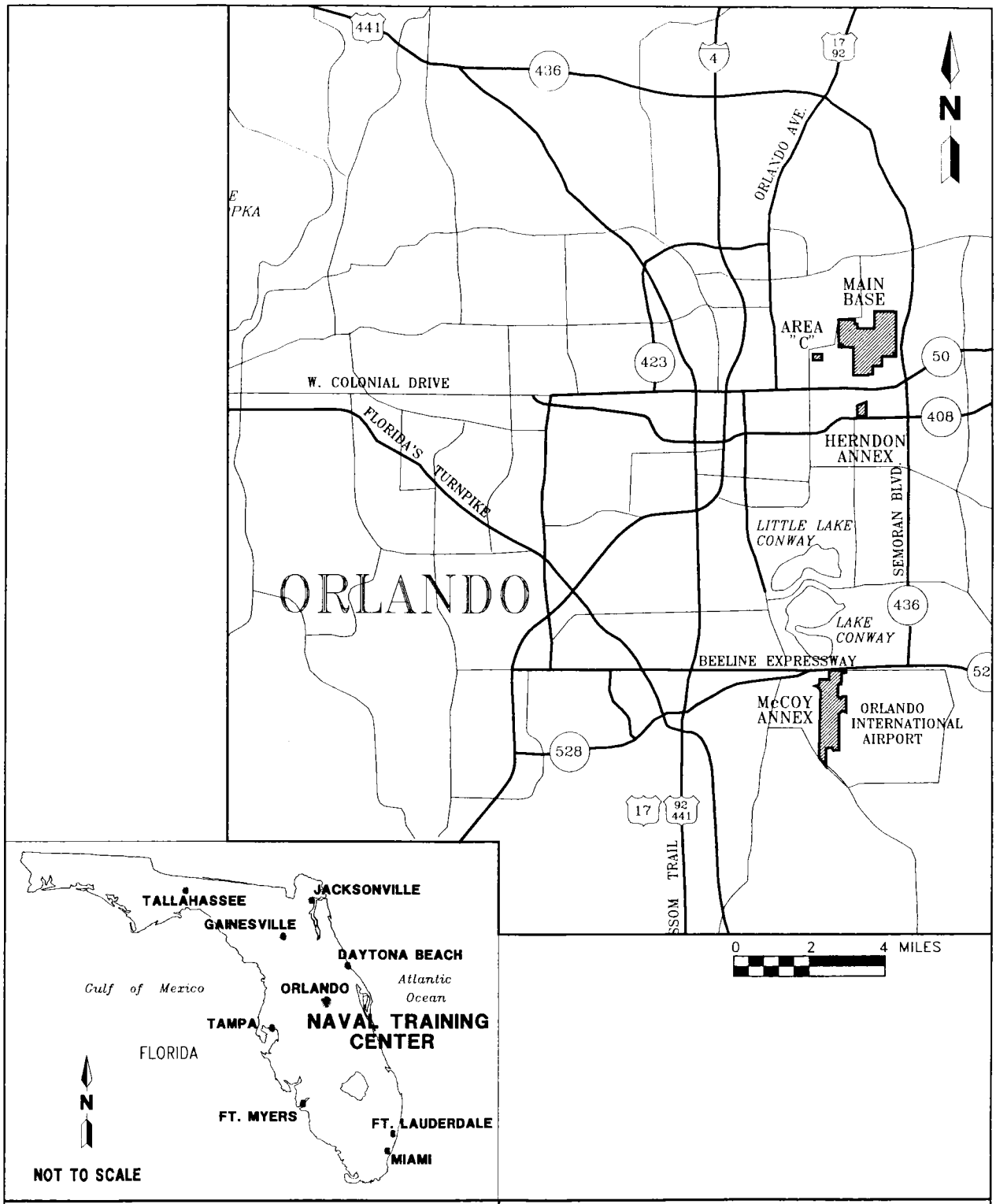

FIGURE 2-1
FACILITY LOCATION MAP

BACKGROUND SAMPLING REPORT

McCOY ANNEX
NTC ORLANDO, FLORIDA

H:\ORLANDO\SITELOC\KCP-WDW\04-12-95

ORLANDO NAVAL TRAINING CENTER

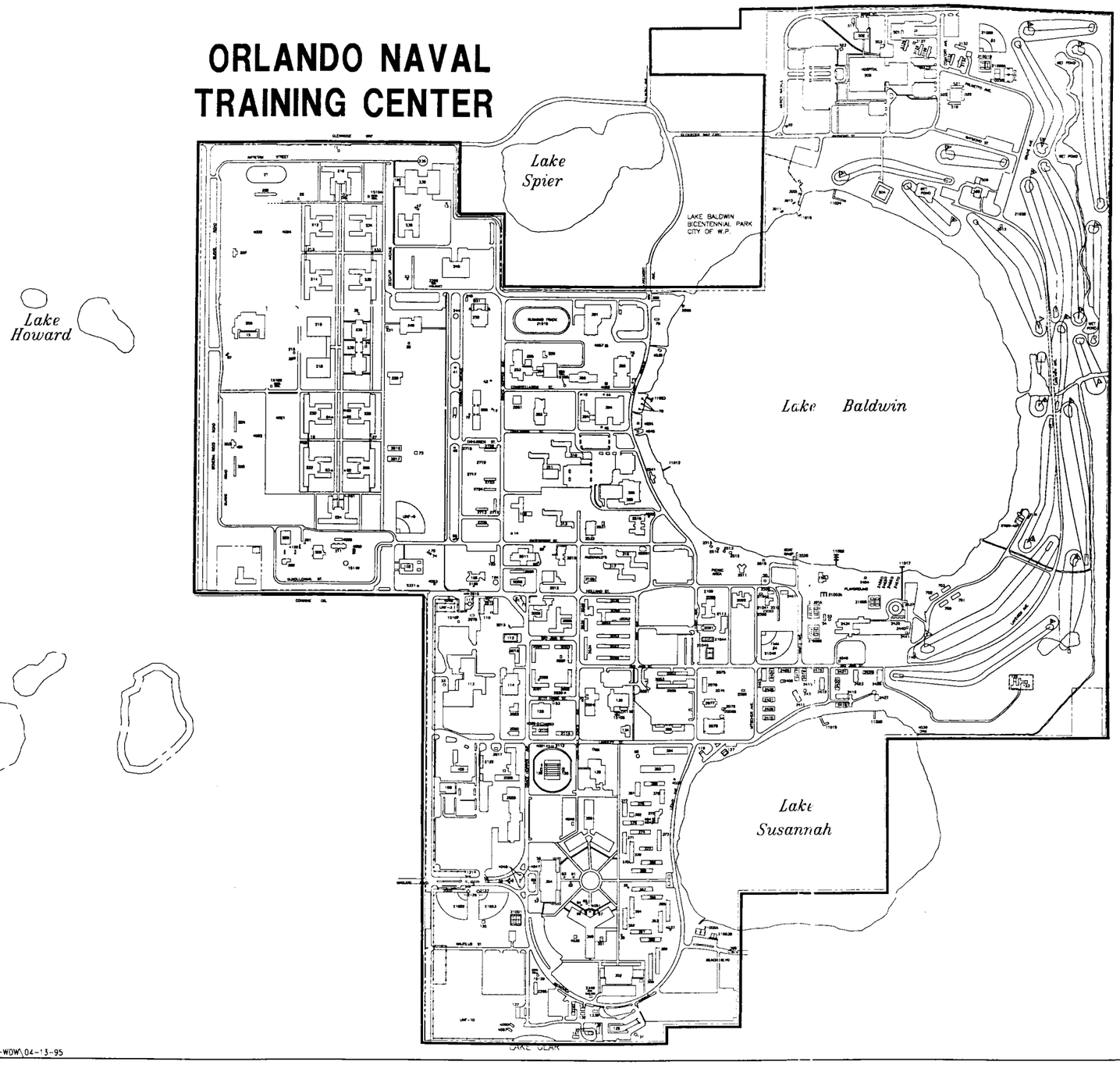

0 500 1000

APPROXIMATE SCALE: 1" = 1000'

FIGURE 2-2
MAIN BASE

BACKGROUND SAMPLING REPORT

NAVAL TRAINING CENTER
ORLANDO, FLORIDA

H:\ORLANDO\TANK-NTC\KCP-WDW\04-13-95

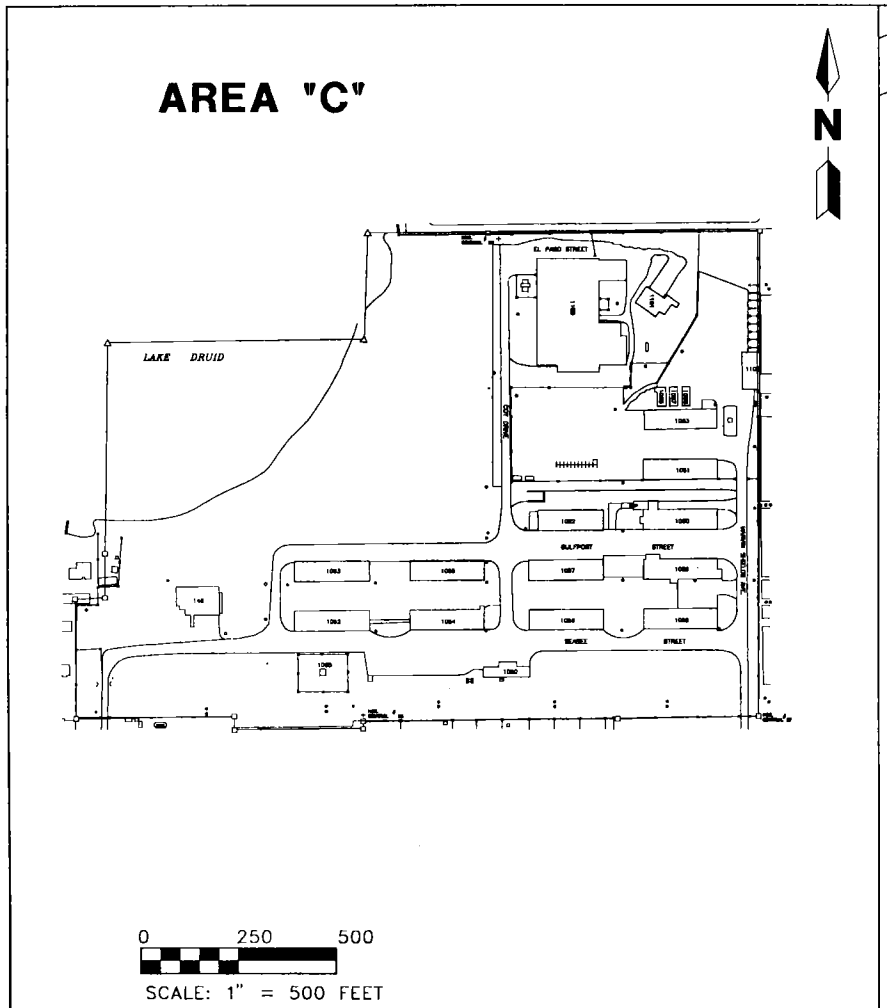

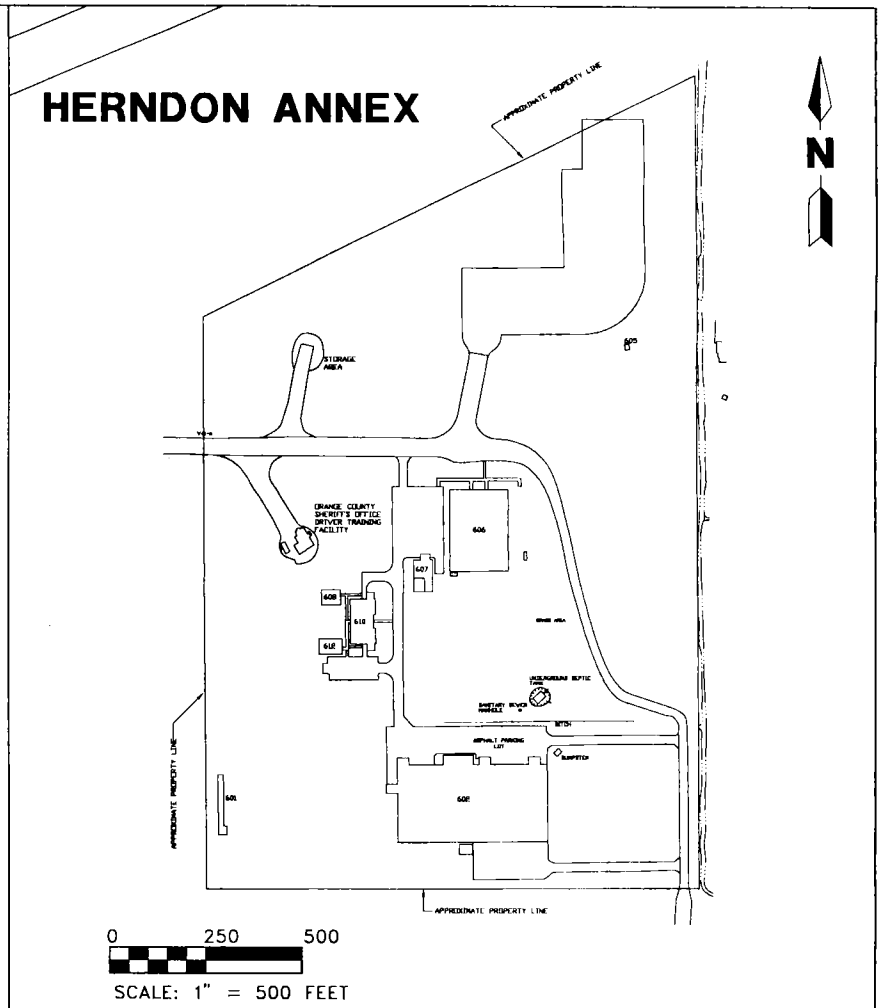

FIGURE 2-3
AREA 'C' AND HERNDON ANNEX

BACKGROUND SAMPLING REPORT

NAVAL TRAINING CENTER
ORLANDO, FLORIDA

H:\ORLANDO\TANK-NTC\KGP-WDW\04-12-95

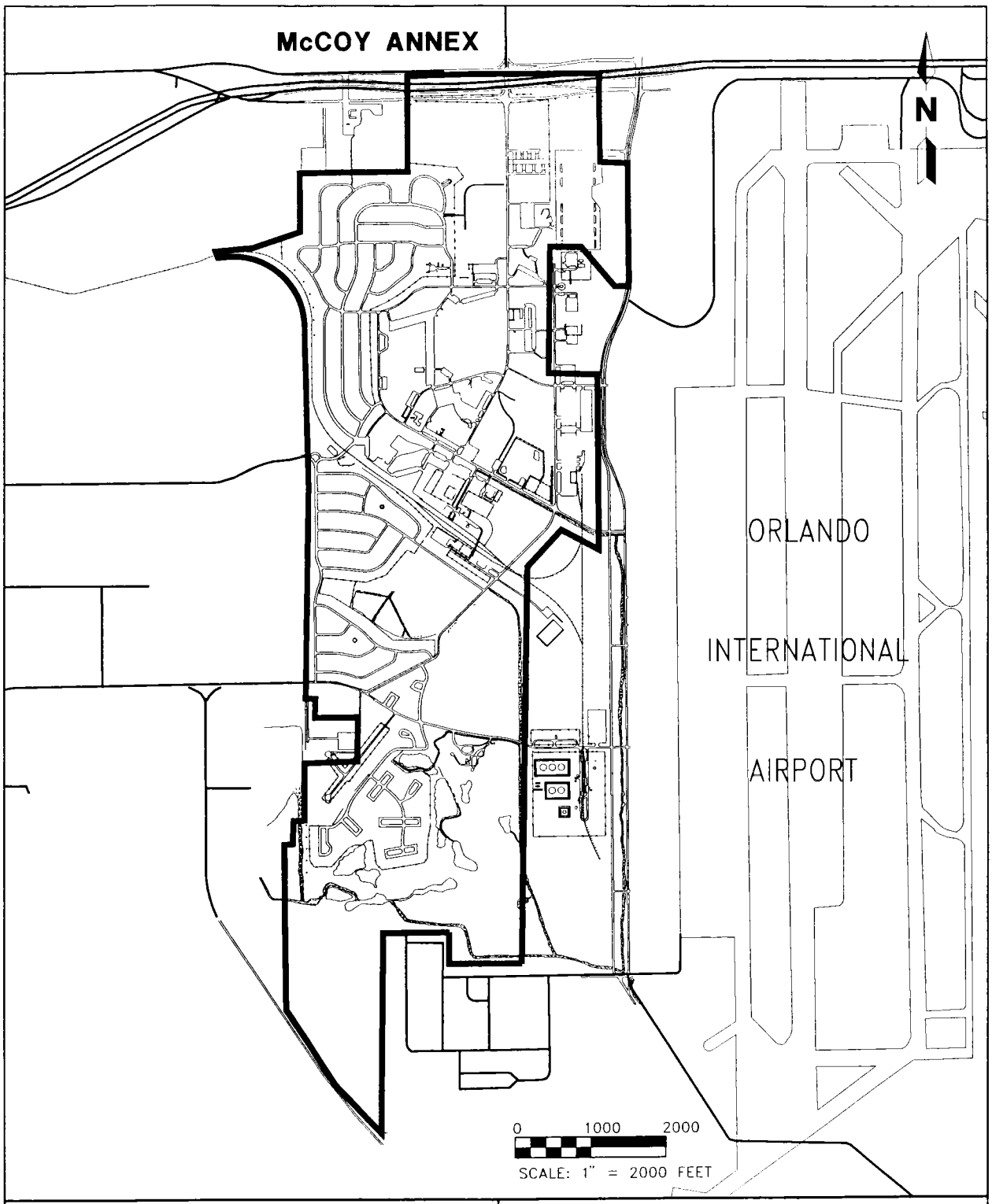

FIGURE 2-4
MCCOY ANNEX

BACKGROUND SAMPLING REPORT

NAVAL TRAINING CENTER
ORLANDO, FLORIDA

H:\ORLANDO\MCCOY\KGP-WDW\04-12-95

and restaurants. Adjacent to the southern boundary are undeveloped woodlands and a former munitions storage complex.

Most of the city of Orlando, as well as the NTC, Orlando facilities are considered to be in the highland topographic region of the county, where elevations are generally greater than 105 feet above mean sea level (msl), but range from 50 feet to 225 feet above msl. The topography of this region is characterized by closed depressions and sinkhole lakes, which commonly facilitate groundwater recharge (Lichtler, et al., 1968). The topography in the immediate area of Orlando is generally flat, with elevations ranging from approximately 65 feet to 125 feet above msl. The lakes in the area are prone to flooding. Regional drainage is poorly developed, but generally flows toward the south. More detailed information on physical conditions at NTC, Orlando may be found in the POP, Volume I (ABB-ES, 1994a).

3.0 SAMPLING PROGRAM

Surface soil, subsurface soil, and groundwater samples were collected during the background sampling program to characterize existing background conditions for NTC, Orlando. The first step was to assess, to the extent possible, if the locations selected had been affected by past practices. The approach used for selecting background locations consisted of:

- identifying the mapped soil types present at NTC, Orlando, using Orange County soil survey maps prepared by the Soil Conservation Service for the U.S. Department of Agriculture (USDA, 1989);
- correlating areas included in site screening investigations (i.e., confirmed or suspected release sources) with soil types, using the soil maps and Environmental Baseline Survey (EBS) maps (ABB-ES, 1994b);
- targeting areas with those soil types that appeared to be representative of local background conditions, using aerial photographs and onsite visual inspection;
- identifying locations likely upgradient (based on calculated groundwater flow directions derived from ongoing site investigation activities) of known or suspected onsite contaminant sources; and
- appropriately distributing soil and groundwater sampling locations among the targeted areas.

The following criteria were also applied, to the extent possible given the urban setting, in the selection of sample locations:

- avoid roads and railroads by at least 100 feet (or as far as possible);
- avoid areas where current human activities may influence samples (e.g., runoff pathway from car wash, downwind of painting operations); and
- avoid areas that appear stained, exhibit a chemical odor, or where the land surface has been obviously disturbed (i.e., depressions or uneven terrain, or debris at the land surface).

Surface soil samples, subsurface soil samples, and monitoring wells were distributed between locations that met these criteria.

3.1 SURFACE SOIL. A detailed review of the "Soil Survey of Orange County, Florida" (U.S. Department of Agriculture [USDA], Soil Conservation Service, 1989) was completed to guide the selection of background surface soil sampling locations.

The Soil Survey (USDA, 1989) presents a generalized description of surficial soil for Orange County. Surficial soil in Orange County has been divided into three groups: soil of the uplands and low ridges; soil of the flatwoods, low ridges, and knolls; and soil of the swamps, sloughs, and flood plains. NTC, Orlando,

located in central Orange County, lies primarily on soil of the flatwoods, with small portions of the Main Base on soil of the uplands.

Flatwoods soil are comprises the (1) Smyrna-Pomello-Immokalee, (2) Smyrna-Basinger-St. Johns, (3) Urban land-Smyrna-Pomello, and (4) Malabar-Felda map units. Upland soil comprises (1) Candler, (2) Candler-Urban land-Tavares, (3) Tavares-Zolfo-Millhopper, and (4) Urban land-Tavares-Pomello map units. Only the Smyrna-Basinger-St. Johns, Urban land-Smyrna-Pomello, and Urban land-Tavares-Pomello series are present at NTC, Orlando.

The Smyrna-Basinger-St. Johns map unit is described as nearly level, poorly drained, and very poorly drained sandy soil. In some cases, organic-stained subsoil is present at a depth of 30 to 50 inches below land surface (bls).

The Urban land-Smyrna-Pomello map unit is described as nearly level to gently sloping, poorly to moderately well drained, sandy with organic-stained subsoil at depth, and mostly modified for urban use. This soil occurs in broad flatwood areas, with shallow depressions and poorly defined drainageways scattered throughout.

The Urban land-Tavares-Pomello map unit is described as nearly level to gently sloping, moderately well drained, sandy, with an organic subsoil at depth, and mostly modified for urban use. This soil occurs on low ridges and knolls and in the uplands and flatwoods areas.

These general map unit complexes are used to describe the region. The map units have also been further divided into detailed soil map units based on soil characteristics. These characteristics include the inclination of slopes formed by the soil, the permeability of the soil, and the composition (e.g., sandy, loamy, etc.) of the soil horizons present. The detailed soil units include:

- Smyrna-Urban land,
- St. Lucie-Urban land,
- Zolfo-Urban land,
- Basinger fine sand,
- Smyrna fine sand, and
- Urban land.

Table 3-1 summarizes all detailed soil types mapped for each NTC, Orlando facility along with an estimate of the percentage of the total area for each facility in which the soil type occurs. Figures 3-1 to 3-3 show soil classifications for each NTC, Orlando facility.

As discussed in the Background Sampling Plan (ABB-ES, 1995), 16 samples were collected to generate a database for naturally occurring constituents in surficial soil at NTC, Orlando. Samples were located assuming one background data set would be established for Main Base, Herndon Annex, and Area "C", and a separate background data set would be established for McCoy Annex. Tentative sampling locations from each of the soil units were selected. Following the selection of the tentative locations, historical aerial photographs were reviewed to identify obvious signs of human activity in the targeted areas. Given the urban nature of most of NTC, Orlando, very few of the sampling locations could be located in completely natural areas. The aerial photograph review served to eliminate tentative locations primarily based on the former presence of a structure or

Table 3-1
Surficial Soil Types

Background Sampling Report
Naval Training Center, Orlando
Orlando, Florida

Area	Soil Type	Percentage
Main Base	Smyrna-Urban land	65 to 70 percent
	St. Lucie-Urban land	10 to 15 percent
	Pomello-Urban land	less than 5 percent
	Zolfo-Urban land	less than 5 percent
	Tavares-Urban land	less than 1 percent
	Sanibel Muck	less than 1 percent
McCoy Annex	Smyrna-Urban land	75 to 80 percent
	Basinger fine sand	10 to 12 percent
	Smyrna fine sand	5 to 7 percent
	Ona-Urban land	less than 5 percent
	Pomello fine sand	less than 1 percent
	Sanibel Muck	less than 1 percent
	Borrow Pits	less than 1 percent
	St. Johns fine sand	less than 1 percent
Area "C"	Basinger fine sand	10 to 20 percent
	Urban land	75 to 80 percent
Herndon Annex	St. Lucie-Urban land	90 to 95 percent
	Arents	5 to 10 percent

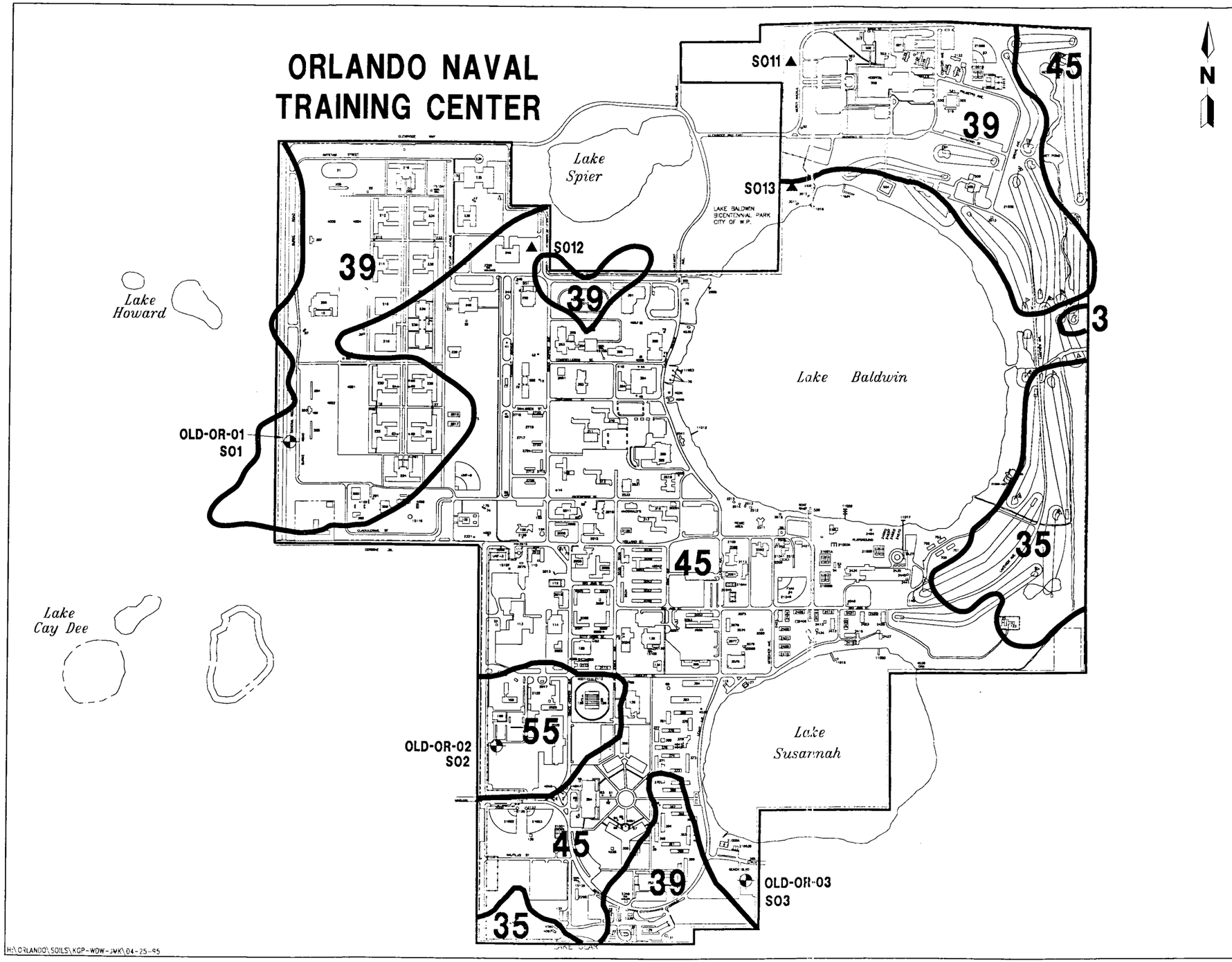

LEGEND

3	Basinger fine sand, depressional
35	Pomello – Urban land complex, 0 to 5 percent slopes
39	St. Lucie – Urban land complex, 0 to 5 percent slopes
45	Smyrna – Urban land complex
55	Zolfo – Urban land complex
SO11 ▲	Surface and subsurface soil sampling location
OLD-OR-01 SO1 ⊕	Surface soil sample, subsurface soil sample, and monitoring well location

Source:
USDA, Soil Survey of Orange County, Florida

0 500 1000
APPROXIMATE SCALE: 1" = 1000'

FIGURE 3-1
SOIL CLASSIFICATIONS AND BACKGROUND SAMPLING LOCATIONS, MAIN BASE

BACKGROUND SAMPLING REPORT

NAVAL TRAINING CENTER
ORLANDO, FLORIDA

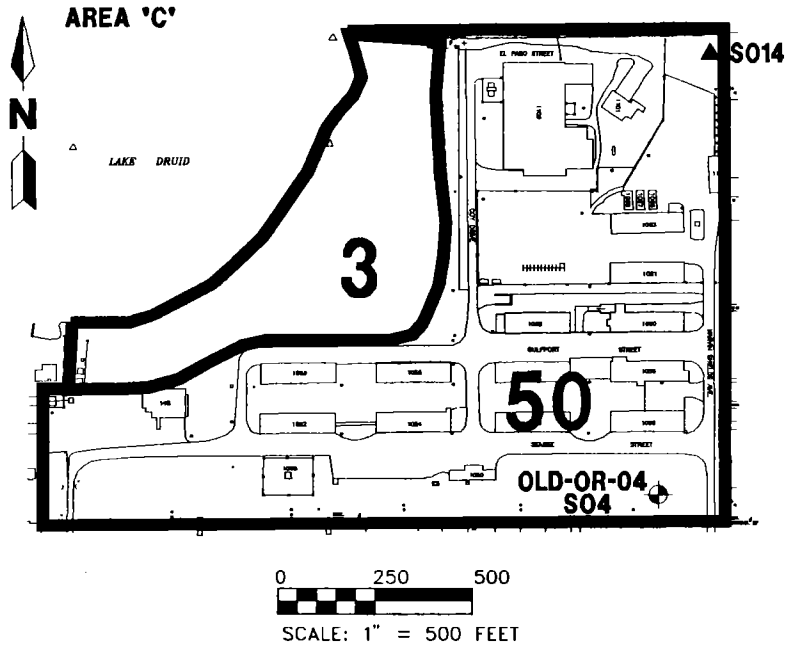

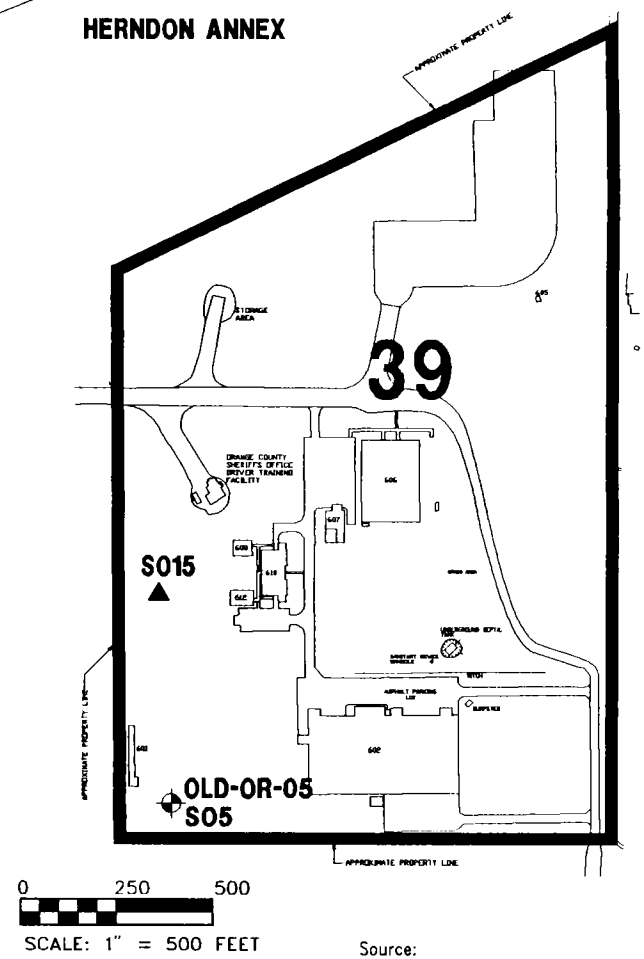

Source:
USDA, Soil Survey of Orange County, Florida

LEGEND

3 Basinger fine sand, depressional
39 St. Lucie – Urban land complex, 0 to 5 percent slopes
50 Urban land

S014 ▲ Surface and subsurface soil sampling location

OLD-OR-04 S04 ⊕ Surface soil sample, subsurface soil sample, and monitoring well location

FIGURE 3-2
SOIL CLASSIFICATIONS AND BACKGROUND SAMPLING LOCATIONS, AREA 'C' AND HERNDON ANNEX

BACKGROUND SAMPLING REPORT

NAVAL TRAINING CENTER ORLANDO, FLORIDA

H:\ORLANDO\SOILS\KGP-WDW-JMK\04-26-95

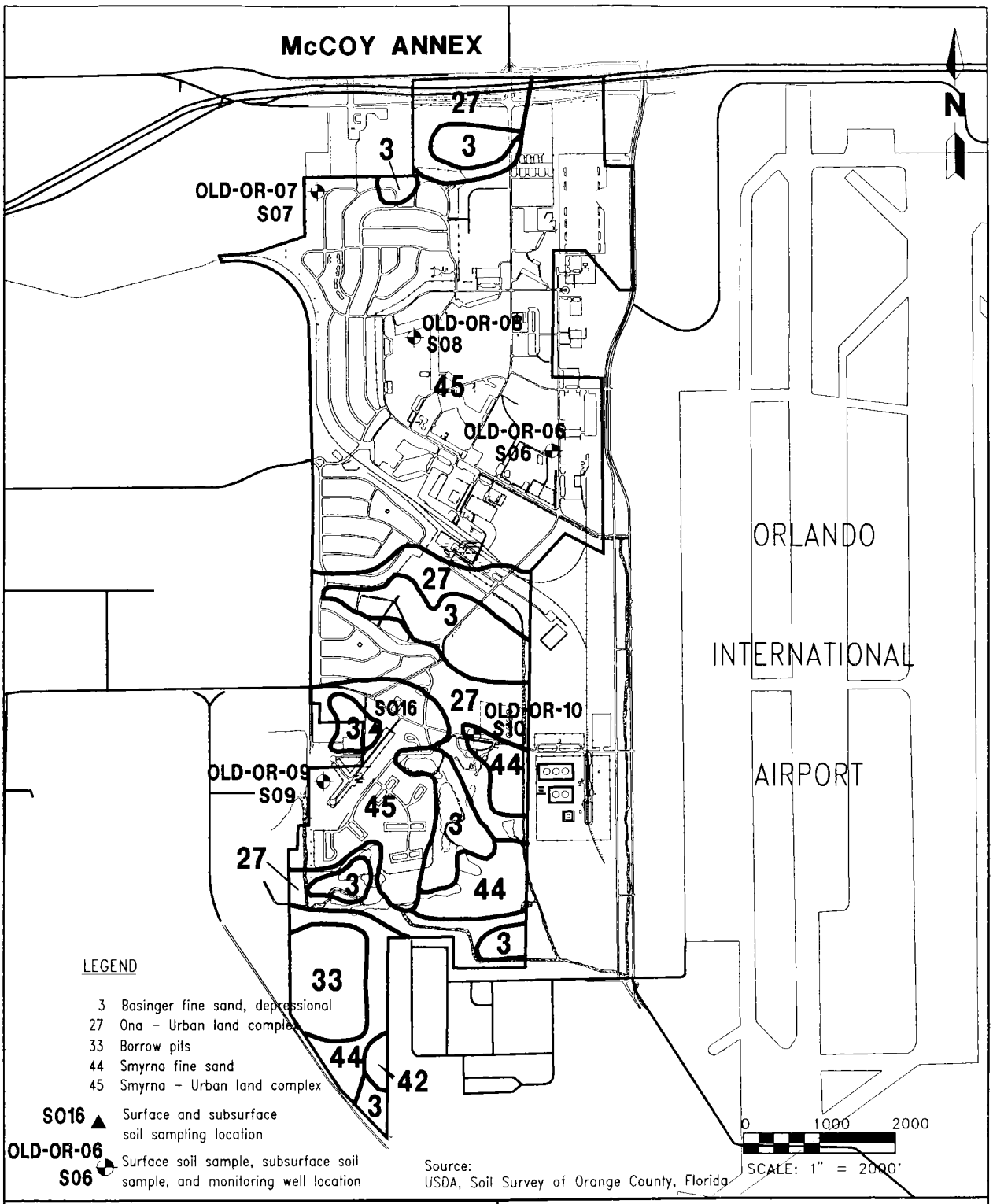

FIGURE 3-3
SOIL CLASSIFICATIONS AND BACKGROUND SAMPLING LOCATIONS, MCCOY ANNEX

H:\ORLANDO\MCSOILS\KGP-WDW-JMK\04-26-95

BACKGROUND SAMPLING REPORT

NAVAL TRAINING CENTER
ORLANDO, FLORIDA

storage area. Final locations were confirmed after a field reconnaissance was performed to check for recent activity and evaluate the accessibility of each location.

The distribution of background surface soil sample locations relative to soil types is summarized in Table 3-2 and shown on Figures 3-1, 3-2, and 3-3. The number of samples from each soil type was based on the frequency of occurrence of each soil type in each portion of NTC, Orlando,. Because the areas of investigation are fairly evenly distributed across the base, this approach established data sets that include samples from several different soil types, and represent natural inorganic concentrations of the collective soil types at NTC, Orlando,. This strategy eliminates the need to compare data from each site with its specific soil type, and allows a single background data set for the Main Base area and one for McCoy Annex to be sufficient for all background comparisons.

All surface soil samples were collected from a depth of 0 to 12 inches bls using hand-augers, in accordance with procedures outlined in the POP, Section 4.5, Sampling Techniques (ABB-ES, 1994a). Samples were submitted for laboratory analysis of Contract Laboratory Program (CLP) target compound list (TCL) volatile organics (VOCs), semivolatile organics (SVOCs), target analyte list (TAL) inorganics, pesticides and PCBs, and herbicides in accordance with USEPA Level IV data quality objectives (DQOs).

3.2 SUBSURFACE SOIL AND GROUNDWATER. Following the selection of the surface soil samples (described above), the monitoring wells were divided among the background locations selected. Three monitoring wells were located at the Main Base, one at Herndon Annex, and one at Area "C" to establish the Main Base background groundwater data set, and five wells were located at McCoy Annex to establish the McCoy Annex background groundwater data set.

The distribution of background monitoring well locations relative to soil types is summarized in Table 3-2 and shown on Figures 3-1, 3-2, and 3-3.

Monitoring wells were installed in the shallow surficial aquifer using hollow stem auger (HSA) drilling techniques to an approximate depth of 15 feet bls. Monitoring well construction details are shown in Table 3-3. Background subsurface soil samples were collected from each monitoring well location using split spoon sampling techniques from the 2-foot interval immediately above the water table. Subsurface soil samples were collected from background surface sample locations without monitoring wells by hand auger. Soil boring logs are presented in Appendix A, and monitoring well construction diagrams are included in Appendix B.

After installation, monitoring wells were developed in accordance with the POP, paragraph 4.4.6.4, Monitoring Well Development (ABB-ES, 1994a). Well Development Records are included in Appendix C.

Groundwater samples were collected from all background monitoring wells using a peristaltic pump and a low-flow technique as described in the POP, paragraph 4.5.2.2, Groundwater Sampling (ABB-ES, 1994a). Groundwater sampling logs, with measurements of temperature, conductivity, pH, and turbidity, are presented in Appendix D.

Table 3-2
Sample Summary and Corresponding Soil Types

Background Sampling Report
Naval Training Center, Orlando
Orlando, Florida

Sample Locations	Soil Type
Main Base	
S013, S03*, S012	Smyrna - Urban land complex: flatwood areas, black to grey fine sand, poorly drained
S01*, S011	St. Lucie - Urban land complex: upland areas, grey to white fine sand, very permeable
S02*	Zolfo - Urban land complex: slight upland areas, brown to grey fine sand, somewhat poorly drained
Area "C"	
S04*, S014	Urban land: 85 percent or more paved
Herndon Annex	
S05*, S015	St. Lucie - Urban land complex: upland areas, grey to white fine sand, very permeable
McCoy Annex	
S06*, S07*, S08*, S09*	Smyrna - Urban land complex: flatwood areas, black to grey fine sand, poorly drained
S016	Basinger fine sand, depressional: shallow depressions and sloughs, ponded, black to grey fine sand, very poorly drained
S10*	Smyrna fine sand: flatwood areas, black to grey fine sand, poorly drained

Note: Sample locations noted with asterisk (*) were coincident with a background monitoring well. Refer to Figures 3-1, 3-2, and 3-3 for locations.

Table 3-3
Monitoring Well Construction Data

Background Sampling Report
Naval Training Center, Orlando
Orlando, Florida

Monitoring Well Number	Borehole Depth (ft bls)	Total Well Depth (ft bls)	Screened Interval (ft bls)	Top of Sand Pack (ft bls)	Top of Bentonite (ft bls)	Water Table[1] (ft bls)
OLD-OR-01	14	13	3 to 13	2	1.5	5.0
OLD-OR-02	14	13	3 to 13	2	1.5	6.0
OLD-OR-03	14	13	3 to 13	2	1.5	5.0
OLD-OR-04	14	13	3 to 13	2	1.5	7.0
OLD-OR-05	14	13	3 to 13	2	1.5	4.0
OLD-OR-06	14	13	3 to 13	2	1.5	8.0
OLD-OR-07	14	13	3 to 13	2	1.5	4.0
OLD-OR-08	14	13	3 to 13	2	1.5	3.0
OLD-OR-09	14	13	3 to 13	2	1.5	3.0
OLD-OR-10	14	14	4 to 14	2	1.5	6.5

[1] Water table determined during well installation.

Notes: ft = feet.
bls = below land surface.

Subsurface soil and groundwater samples were submitted for laboratory analysis of CLP TCL VOCs, SVOCs, TAL inorganics, pesticides and PCBs, and herbicides, in accordance with USEPA Level IV DQOs. Groundwater samples were also submitted for determination of total suspended solids (TSS) and radiological (gross alpha, gross beta, and gamma scan) analysis.

4.0 DATA QUALITY ASSESSMENT

This chapter is an assessment of quality control for field sampling activities, and assessment of data quality and useability for samples collected during the background sampling program at NTC, Orlando,. Sampling of all media was conducted between October 25, 1994, and November 11, 1994.

4.1 FIELD QUALITY CONTROL ASSESSMENT. Field quality control (QC) samples (e.g., field blanks, trip blanks, rinsate blanks, and duplicates) were collected, stored, transported and analyzed per USEPA Region IV Standard Operating Procedures (SOP) (USEPA, 1991). Blank samples provide a measure of contamination that may have been introduced into a sample set either in the field while samples were being collected or transported to the laboratory or in the laboratory during sample preparation and analysis. Three types of blank samples (trip blanks, field blanks, and rinsate blanks) were collected during the background sampling program at NTC, Orlando,. Trip blanks are used to indicate potential contamination due to migration of VOCs from the air in sample shipping containers, through the septum or around the lid of sampling vials, and into the sample. Field blanks and rinsate blanks are used to determine if certain field sampling or decontamination procedures (e.g., insufficient cleaning of sampling equipment) result in cross contamination of site samples. The field blank sample is also used to evaluate the quality of the water used in the decontamination procedures. Field duplicate samples are two samples collected simultaneously from the same sampling location and are used as measures of either the homogeneity of the medium sampled or the precision in sampling. One field blank, eleven trip blanks, nine rinsate blanks, and six duplicate samples were collected during the background sampling program and analyzed for the same parameters as the field samples.

All field QC samples were collected in conformance with the requirements of the approved Quality Assurance Plan in the NTC, Orlando, POP (ABB-ES, 1994a), and USEPA Region IV SOP (USEPA, 1991).

4.2 LABORATORY DATA QUALITY ASSESSMENT SUMMARY. All analytical results for environmental samples collected during the background sampling program were evaluated and validated according to the Naval Energy and Environmental Support Activity (NEESA) and USEPA QC criteria to evaluate data quality and usability. The data tables included in Appendix E reflect validation according to these criteria. The NEESA documentation and validation requirements are described in the June 1988 NEESA *Sampling and Chemical Analysis Quality Assurance Requirements for the Navy Installation Restoration Program* (NEESA, 1988) (Document 20.2-047B). The USEPA functional guidelines for evaluating organic and inorganic laboratory data (USEPA, 1991a; 1988a) were used, where applicable, to validate the laboratory data. Data review and validation for the background sampling data was performed under subcontract by Heartland Environmental Services, Inc., of St. Peters, Missouri.

All laboratory data generated during the sampling program were reviewed and validated in terms of data quality objectives (DQOs). DQOs refer to a set of qualitative and quantitative statements that assess the quality of data generated during the sampling and analysis phases of the project as defined in Data Quality Objectives for Remedial Response Activities (USEPA, 1987). The DQOs are defined

by the parameters of precision, accuracy, representativeness, completeness, and comparability (PARCC). These parameters present an indication of data quality and the confidence that a particular compound may be present or absent in an associated environmental sample. The sampling program DQOs as stated in Section 6.1 of the Background Sampling Plan (ABB-ES, 1995) are USEPA Level IV.

The PARCCs Summary Report generated by the ABB-ES validation subcontractor is included in Appendix G. This report provides a detailed assessment of the analytical performance and quality of data generated during the background sampling field program. The report includes data tables summarizing analytical results for matrix spike and matrix spike duplicate (MS/MSD) samples, initial and continuing calibration standards, and compounds detected in field duplicate samples. These data were used to evaluate the precision and accuracy of analytical methods and sampling techniques used during the background sampling field program.

The following paragraphs discuss each of the PARCC criteria.

4.2.1 Precision Field duplicate samples were collected during field activities to assess sampling precision. Field duplicate groundwater samples and soil samples were collected in accordance with USEPA Level IV guidelines at a minimum frequency of 10 percent (NEESA, 1988) with the exception of surface soil samples. The actual frequency at which field duplicates were collected for each matrix is as follows: 2 groundwater duplicate samples out of 10; 3 subsurface soil duplicate samples out of 16; and 1 surface soil duplicate sample out of 12. Fewer, or more than 1 in 10, field duplicate samples per matrix were collected for the background sampling program because the background samples were combined with site screening samples in the same sample delivery groups.

Tables 2-1 through 2-8 for groundwater and 2-9 through 2-16 for soil in Appendix G summarize the results of assessing the USEPA Level IV data for field duplicate precision. The precision results are expressed as relative percent difference (RPD). Duplicate sample precision was also assessed by evaluation of reproduceability between MS/MSD samples for organics and between laboratory duplicate samples for inorganics (MSDs are not performed for inorganics). Tables summarizing percent recoveries and RPDs for these samples in comparison to the QC advisory limits are included in 2-17 through 2-23 in Appendix G for groundwater samples and Tables 2-24 through 2-31 in Appendix G for soil samples. Based on the assessment of duplicate precision, the water matrix analytical data was acceptable and did not require qualification. The metal analysis of the MSD of sample 0RB00701 exhibited noncompliant RPDs for the analytes iron and lead (Table 2-28, Appendix G). Positive results reported for lead and iron in associated samples were appropriately qualified as estimated and flagged with a "J." All other soil matrix analytical data were acceptable and did not require qualification.

Analytes detected in soil that did not meet the RPD criteria were largely due to low sample values at or below the quantitation limit, or soil matrix heterogeneity.

4.2.2 Accuracy The assessment of accuracy is determined by comparison of percent recoveries of MS for inorganic analyses and for MS and MSDs for organics. Accuracy was also assessed by surrogate spike recoveries in analytical fractions that use them. Matrix spike recoveries provide an indication of bias in reported

data toward overestimated or underestimated concentrations, and surrogate spikes provide an indication of method and analytical instrumentation performance.

A summarization of the percent recoveries for matrix spikes and surrogate standards in comparison to the QC advisory limits are found in Tables 2-17 through 2-23 in Appendix G for groundwater samples and in Tables 2-24 through 2-41 in Appendix G for soil samples. Tables summarizing percent recoveries for surrogate standards are shown in Tables 3-1 through 3-7 in Appendix G for the groundwater samples and in Tables 3-8 through 3-11 in Appendix G for soil samples.

As discussed in the PARCCs Summary Report in Appendix G, the analytical results for matrix spikes were acceptable in the groundwater samples with low potential bias in the data for PAHs. All positive and non-detect results in samples which exhibited low matrix spike recoveries were qualified as estimated and flagged with a "J." Surrogate recoveries for pesticides and PCBs in background water samples 0R00014, 0RG00201, 0RG00401, 0RG00501, 0RG00601, 0RG00701, 0RG00901, and 0RG01001 were below the QC limits. All positive results in the samples exhibiting the noncompliant results for surrogate recoveries were qualified as estimated and flagged with a "J." The analytical results for matrix spikes were acceptable for all soil samples. Surrogate recoveries in four background soil samples were outside the laboratory control limits, soil sample results 0RB00901 and 0RS01202 were below the control limits, and soil samples 0RB00801 and 0RS00801 exhibited zero percent recovery. As a result, all positive results in these samples were qualified as estimated and flagged with a "J," and all nondetect values in the samples with zero percent are unreliable and were rejected and flagged with an "R."

4.2.3 Representativeness Representativeness is the degree to which the data obtained from a sample collection activity accurately reflect the contamination at a site. Factors such as the proper selection of analytical methodology and sampling strategies establish the degree of representativeness achieved. Measures used during the chemical analyses of environmental samples to confirm analytical representativeness included the analyses of analytical method blanks. Measures used during field sampling to confirm sampling representativeness included collection of source water blanks (field blanks), equipment rinsate blanks, and trip blanks. In accordance with NEESA guidance, one equipment rinsate blank was collected each day for each type of sampling equipment used that day, one source water blank was collected during each sampling event for each water source, and one trip blank was included in each cooler containing samples for VOC analysis. Rinsate blanks and source water blanks were analyzed for the same chemical parameters as associated environmental samples. The analytical results for the field, rinsate, and trip blanks collected during the background sampling program are presented in Appendix E of this document. A detailed assessment of compounds detected in analytical laboratory method blanks and field blanks collected and analyzed during the field program, and the subsequent impact on data quality and usability are included in the PARCCs Summary Report in Appendix G.

4.2.4 Comparability Comparability is the confidence with which one data set can be compared with another and the degree to which the data are found to be equivalent. Comparability cannot be accurately measured for data collected during the background sampling program because two separate analytical laboratories were not used to analyze duplicate samples. However, the environmental samples were collected and analyzed and the results were reported in accordance with standard procedures, which should assure comparability of the analytical data.

4.2.5 Completeness and Rejected Analytical Data A detailed narrative of fractions containing rejected data is presented in the PARCCs Summary Report in Appendix G. Completeness goal tables showing the number of compounds rejected per matrix for each of the analytical fractions are found in Tables C-1 through C-12 in Appendix G. The specific samples containing rejected data and corresponding rejected analytes are summarized in Table 4-1.

The compounds and analytes that have rejected data include pesticides and PCBs (rejected for noncompliant surrogate recoveries), selected volatile ketones (2-butanone, 2-hexanone, and acetone), and 1,3-dibromo-3-chloropropane (rejected for continuing calibration outliers).

For pesticides and PCBs, all samples (including quality control fractions) are spiked with two surrogate compounds prior to sample preparation to assess the overall efficiency of a method for that particular sample. The sample matrix may produce interfering effects which result in reduced recovery of the surrogate standards. In cases where the surrogate standard was not recovered at all (zero percent recovery) all pesticide and PCB results for that sample are considered unusable and qualified with an "R".

The data for the ketones are commonly rejected during validation because the instrument response factors for these compounds do not meet the criteria specified in the USEPA functional guidelines for evaluating data. This is likely due to the relatively high water solubility of ketones and, hence, low purge efficiency encountered during the sample preparation process.

The rejected data do not impact the conclusions and recommendations presented in this Background Sampling Report. None of the rejected compounds or analytes were detected in background samples at levels considered to be a concern, and no historical evidence suggests these constituents are likely to be a concern.

Table 4-1
Rejected Analytical Data

Background Sampling Report
Naval Training Center, Orlando
Orlando, Florida

Constituent	Sample Numbers
Background Subsurface Soil	
All pesticides and PCBs	ORB00801
Background Surface Soil	
All pesticides and PCBs	ORS00801
Background Groundwater	
1,2-Dibromo-3-chloropropane	ORG00301, ORG00401, ORG00501, ORG00601, ORG00701, ORG00801, ORG00901
2-Butanone	ORG00101, ORG00201, ORG00201D, ORG00301, ORG00401, ORG00501, ORG00601, ORG00701, ORG00701D, ORG00801, ORG00901, ORG01001
2-Hexanone	ORG00101, ORG00201, ORG00201D, ORG00701D, ORG01001
Acetone	ORG00101, ORG00201, ORG00201D, ORG00301, ORG00401, ORG00501, ORG00601, ORG00701, ORG00701D, ORG00801, ORG00901, ORG01001
Rinsate Blanks	
1,2-Dibromo-3-chloropropane, 2-Butanone, acetone	00R00024
Field Blanks	
2-Butanone, 2-hexanone, and acetone	00F00001
Trip Blanks	
2-Butanone, 2-hexanone, and acetone	00T00023, 00T00024, 00T00025

Note: PCBs = polychlorinated biphenyls.

5.0 BACKGROUND SAMPLING RESULTS

Figures 3-1, 3-2, and 3-3 indicate background soil and groundwater sample locations and monitoring well identification (ID) numbers. The 8-digit sample ID numbers used on the laboratory chains of custody and the analytical data tables in this report incorporate the location identifier. For example, a soil sample location designated as S03 on Figure 3-1 corresponds to surface soil sample ID ORS00301 and subsurface sample ORB00301, where the first two digits (OR) represent the Orlando background prefix, the third digit designates a surface soil (S) or subsurface soil (B) sample, the next three digits correspond to the location, and the last two (01) indicate this is the first sample from this location. For groundwater, the monitoring well ID OLD-OR-03 shown on Figure 3-1 corresponds with sample ID ORG00301. OLD indicates Orlando, OR designates a background well, and -03 indicates the third well in the background series. The G in the sample ID designates a groundwater sample; all other digits are as described for soil.

Surface and subsurface soil and groundwater samples were submitted for analysis of organic and inorganic parameters. This data was used to evaluate each background location and determine if potential contaminants were present. However, the intent of the Background Sampling Report is to establish background values for inorganics only. Organic compounds will be evaluated on a case-by-case and risk basis during the site screening process.

5.1 SURFACE SOIL. Chemical analytical data from the collection and analysis of background surface soil samples is summarized (detections only) in Tables 5-1 and 5-2. Table 5-1 presents results for the Main Base data set and Table 5-2 presents the McCoy Annex data set. Complete analytical data from the analysis of background surface soil samples is presented in Appendix E. Background sample locations are shown on Figures 3-1, 3-2, and 3-3.

5.1.1 Main Base Data Set Surface Soil Only one VOC (toluene) was detected in surface soil from the Main Base data set. Toluene was detected at trace concentrations (2J micrograms per kilogram [μg/kg] to 4J μg/kg) in two surface soil samples from the Main Base (S011 and S012) and in one sample from Herndon Annex (S015). Occasional detections of a fuel-related compound such as toluene are to be expected in an urban environment such as NTC, Orlando.

SVOCs detected in surface soil included the PAH benzo(g,h,i)perylene (locations S002 and S003; up to 110J μg/kg) and di-n-butylphthalate (locations S001, S002, S003, and S004, at concentrations between 320J μg/kg and 560 μg/kg). PAHs are commonly found byproducts of combustion and often occur in urban soil. Phthalates are common laboratory contaminants and may not be representative of actual site conditions.

The pesticides 4,4'-dichlorodiphenyldichloroethene (DDE), 4,4'-dichlorodiphenyltrichloroethane (DDT), and alpha- and gamma-chlordane were detected at two background surface soil locations (S012 and S015). Concentrations ranged between 0.6J μg/kg and 12 μg/kg. The presence of pesticides at trace concentrations may be residual from the proper application of these compounds at an earlier date. No herbicides were detected in surface soil from the Main Base data set.

Table 5-1
Surface Soil
Main Base Data Set

Background Sampling Report
Naval Training Center, Orlando
Orlando, Florida

Location [1]		S01	S02	S03	S04	S05	S011	S012	S012	S013	S014	S015
Lab Identifier		ORS00101	ORS00201	ORS00301	ORS00401	ORS00501	ORS01101	ORS01201	ORS01201D	ORS01301	ORS01401	ORS01501
Collect Date		25-Oct-94	25-Oct-94	25-Oct-94	26-Oct-94	26-Oct-94	29-Oct-94	29-Oct-94	29-Oct-94	11-Nov-94	29-Oct-94	28-Oct-94
	MCG[2]											
Volatiles µg/kg												
Toluene	270,000	--	--	--	--	--	4 J	--	2 J	--	--	2 J
Semivolatiles µg/kg												
Benzo(g,h,i)perylene	14,000	--	110 J	91 J	--	--	--	--	--	--	--	--
Di-n-butylphthalate	7,500,000	320 J	550	340 J	560	--	--	--	--	--	--	--
Pesticides/PCBs µg/kg												
4,4'-DDE	2,900	130	--	--	--	--	--	12	11	--	--	3.9
4,4'-DDT	3,100	62 NJ	--	--	--	--	--	11 J	10	--	--	8.1 J
alpha-Chlordane	800	20	--	--	--	--	--	2.1	1.6 J	--	--	0.6 J
gamma-Chlordane	800	13	--	--	--	--	--	1.9 J	1.4 NJ	--	--	0.84 NJ
Dieldrin	**70**	**95**	--	--	--	--	--	--	--	--	--	--
Inorganics, mg/kg												
Aluminum	75,000	127	1940	1460	1020	69.4	1170	828	1080	1640	1470	678
Arsenic	**0.7**	--	0.39 J	0.41 B	0.38 J	--	0.59 B	0.43 J	0.52 B	--	0.67 B	**0.75 B**
Barium	5,000	2.5 B	8.7 B	3.4 B	2.9 B	--	1.1 J	4.7 B	4.7 B	10 B	2.7 B	2.7 B
Beryllium	0.1	--	0.05 B	--	--	--	--	--	--	0.04 B	--	--
Cadmium	37	0.49 B	--	--	--	--	--	--	--	--	--	--
Calcium	--	816 B	124000	5620	293 B	39.6 J	105 B	4260	3220	103 B	390 B	275 B
Chromium	66,000/150[3]	2.1	5.6	2.9	1.2 B	0.62 B	1.1 B	2.3	2.4	2.2 B	1.4 B	3.3
Copper	2,900	1.5 B	2.6 B	2 B	--	--	--	--	--	--	--	--
Iron	--	139 J	512 J	575 J	357 J	25.6 J	487	314	373	473	152	511

See notes at end of table.

Table 5-1 (Continued)
Surface Soil
Main Base Data Set

Background Sampling Report
Naval Training Center, Orlando
Orlando, Florida

Location [1]		S01	S02	S03	S04	S05	S011	S012	S012	S013	S014	S015
Lab Identifier		ORS00101	ORS00201	ORS00301	ORS00401	ORS00501	ORS01101	ORS01201	ORS01201D	ORS01301	ORS01401	ORS01501
Collect Date		25-Oct-94	25-Oct-94	25-Oct-94	26-Oct-94	26-Oct-94	29-Oct-94	29-Oct-94	29-Oct-94	11-Nov-94	29-Oct-94	28-Oct-94
Inorganics--continued												
Lead	500	12.6 J	10.9 J	8.5 J	2.5 J	1.1 J	1.2	6.2	6.3	4.4	2.7	23.2
Magnesium	--	13.2 B	1330	98.4 B	33.5 B	6.5 B	43.7 J	80 B	77.2 B	38.5 J	48.1 J	34.2 J
Manganese	10,000	7.9	12.5	7.9	1.9 B	0.37 B	1.4 B	3.2	3.4	1.8 B	1.3 B	2.7 B
Mercury	23	0.01 B	--	0.02 B	0.02 B	--	--	--	--	--	--	0.08
Nickel	1,500	--	2.2 B	--	--	--	--	--	--	--	--	--
Potassium	--	--	--	77.4 B	--	--	--	--	--	79.9 B	--	--
Selenium	390	0.45 B	--	0.53 J	--	--	--	--	--	0.44 B	--	--
Silver	380	--	--	--	--	0.49 B	--	--	--	--	--	1.3 B
Sodium	--	--	45.7 B	--	--	--	--	--	--	--	--	--
Thallium	--	--	1 J	--	--	--	--	--	--	--	--	--
Vanadium	480	0.67 B	5.7 B	1.8 B	0.53 B	--	1.5 B	0.98 B	1.7 B	0.86 B	0.84 B	0.97 B
Zinc	23,000	10.1	20.9	4.3	1 B	0.42 B	--	3.5 B	3.7 B	--	1.8 B	31.5

[1]Location as shown on Figures 3-1 and 3-2.
[2]MCG = Soil Cleanup Goals for the Military Sites, Florida Department of Environmental Protection, memorandum from L. Mora-Applegate to J. Crane, April 5, 1995. Values are calculated based on exposure assumptions consistent with residential land use.
[3]For chromium, values are for Cr (III) and Cr (VI), respectively.

Notes:
Bold/shaded values indicate result exceeds MCG.
ug/kg = microgram per kilogram.
-- = Nondetect or cleanup goal not available.
J = Estimated Value.
PCB = polychlorinated biphenyl.
DDE = dichlorodiphenyldichbroethene.
DDT = dichlorodiphenyltrichloroethane.
NJ = Presumptive evidence for the presence of the material at an estimated value.
mg/kg = milligram per kilogram.
B = Reported concentration is between the instrument detection limit and the contract required detection limit.

Table 5-2
Surface Soil
McCoy Annex Data Set

Background Sampling Report
Naval Training Center, Orlando
Orlando, Florida

Location [1]		S06	S07	S08	S09	S010	S016
Lab Identifier		ORS00601	ORS00701	ORS00801	ORS00901	ORS01001	ORS01601
Collect Date		27-Oct-94	27-Oct-94	27-Oct-94	27-Oct-94	28-Oct-94	28-Oct-94
	MCG[2]						
Volatiles µg/kg							
Toluene	270,000	--	--	--	--	2 J	--
Semivolatiles, µg/kg							
Acenaphthene	2,000,000	--	--	--	--	--	260 J
Anthracene	16,000,000	--	--	--	--	--	600
Benzo(a)anthracene	**1,400**	--	--	--	**3000**	--	**7300 D**
Benzo(a)pyrene	**140**	--	--	--	**5500**	--	**8200 D**
Benzo(b)fluoranthene	**1,400**	--	--	--	**5900 J**	--	**8200 D**
Benzo(g,h,i)perylene	14,000	--	--	--	4400 J	--	5700 D
Benzo(k)fluoranthene	14,000	--	--	--	4400	--	8300 D
Carbazole	35,000	--	--	--	--	--	340 J
Chrysene	140,000	--	--	--	4700 J	--	8300 D
Di-n-octylphthalate	1,500,000	260 J	200 J	--	--	--	--
Dibenz(a,h)anthracene	**140**	--	--	--	--	--	**2400**
Fluoranthene	2,800,000	--	--	--	3500	--	14000 D
Fluorene	1,900,000	--	--	--	--	--	190 J
Indeno(1,2,3-cd)pyrene	**1400**	--	--	--	**4400**	--	**5800 D**
Phenanthrene	1,200,000	--	--	--	900 J	--	2100
Pyrene	2,200,000	--	--	--	3900	--	11000 D
Pesticides/PCBs, µg/kg							
alpha-Chlordane	800	--	--	R	41 J	--	--
gamma-Chlordane	800	--	--	R	39 NJ	--	--
Aroclor-1260	1000	99 J	--	R	--	--	--

See notes at end of table.

Table 5-2 (Continued)
Surface Soil
McCoy Annex Data Set

Background Sampling Report
Naval Training Center, Orlando
Orlando, Florida

Location [1]		S06	S07	S08	S09	S010	S016
Lab Identifier		ORS00601	ORS00701	ORS00801	ORS00901	ORS01001	ORS01601
Collect Date		27-Oct-94	27-Oct-94	27-Oct-94	27-Oct-94	28-Oct-94	28-Oct-94
Inorganics, mg/kg							
Aluminum	75,000	1680	2310	2270	1600	1570	5180
Arsenic	**0.7**	**1.1 J**	**0.9 B**	0.69 B	**0.81 B**	**1.3 B**	**0.8 B**
Barium	5000	4.2 B	3.7 B	1.8 B	6.7 B	4.2 B	44.3
Beryllium	**0.1**	--	--	--	0.05 B	--	**0.41 B**
Calcium	--	527 B	737 B	40800	12100	40400	6140
Chromium	66,000/150 [3]	2.4	2.4	2.8	2.7	3.6	9.3
Copper	2900	1.7 B	1.1 B	--	1.1 B	--	--
Iron	--	276 J	394 J	195 J	600 J	276	787
Lead	500	9.5 J	3.4 J	1.1 J	10 J	7	33
Magnesium	--	25.3 B	45.1 B	325 B	126 B	408 B	213 B
Manganese	10,000	2.6 B	1.1 B	4.5	3.5	5.9	14.8
Mercury	23	0.02 B	0.04 B	0.02 B	0.02 B	--	--
Potassium	--	--	--	--	--	--	105 B
Selenium	390	--	0.57 J	--	--	--	--
Vanadium	480	1.3 B	1.4 B	2.7 B	2.4 B	2.1 B	4.9 B
Zinc	23,000	3.4 B	0.8 B	0.4 B	2.8 B	--	4 B

[1]Location as shown on Figures 3-3.
[2]MCG = Soil Cleanup Goals for the Military Sites, Florida Department of Environmental Protection, memorandum from L. Mora-Applegate to J. Crane, April 5, 1995. Values are calculated based on exposure assumptions consistent with residential land use.
[3]For chromium, values are for Cr (III) and Cr (VI), respectively.

Notes:
μg/kg = microgram per kilogram.
-- = Nondetect or cleanup goal not available.
J = Estimated Value.
D = dilution.
R = unusable data.
mg/kg = milligram per kilogram.
NJ = Presumptive evidence for the presence of the material at an estimated value.
B = Reported concentration is between the instrument detection limit and the contract required detection limit.

Surface soil samples were also analyzed for full suite TAL inorganics. This data is summarized in Table 5-1. No detected concentrations of antimony and cobalt were reported. Eleven inorganics were present in the majority of the samples analyzed. These compounds and the range of values detected were as follows: aluminum, 69.4 milligrams per kilogram (mg/kg) to 1,940 mg/kg; arsenic, 0.38 mg/kg to 0.75 mg/kg; barium, 1.1 mg/kg to 10.0 mg/kg; calcium, 39.6 mg/kg to 124,000 mg/kg; chromium, 0.62 mg/kg to 5.6 mg/kg; iron, 25.6 mg/kg to 575 mg/kg; lead, 1.1 mg/kg to 23.2 mg/kg; magnesium, 6.5 mg/kg to 1,330 mg/kg; manganese, 0.37 mg/kg to 12.5 mg/kg; vanadium, 0.53 mg/kg to 5.7 mg/kg; and zinc 0.42 mg/kg to 31.5 mg/kg. Also reported were detections of beryllium, cadmium, copper, mercury, nickel, potassium, selenium, silver, sodium, and thallium. In all, the detections of inorganic constituents reported appear to be within expected ranges for such naturally occurring constituents.

5.1.2 McCoy Annex Data Set Surface Soil Only one volatile organic (toluene) was detected in surface soil from the McCoy Annex. Toluene was detected at 2J μg/kg in surface soil sample S010. As discussed above, occasional detections of a fuel-related compound such as toluene are to be expected in an urban environment such as NTC, Orlando,.

Semivolatiles detected in surface soil included PAHs (41 mg/kg at location S09 and 820 mg/kg at S016) and di-n-octylphthlalate (up to 260J μg/kg at locations S06 and S07). Phthalates are common laboratory contaminants and may not be representative of actual site conditions. Surface soil locations S09 and S016 are in the vicinity of the Family Camp, site screening Study Area 26. This area is being investigated because review of aerial photographs reveal possible storage of 55-gallon drums and other equipment along Family Camp Road. Locations S09 and S016 were believed to be located beyond the boundaries of the storage areas visible on the aerial photographs.

The pesticides alpha- and gamma-chlordane were detected in surface soil from location S09 at 41J μg/kg and 39NJ μg/kg, respectively. The PCB aroclor-1260 was detected at 99J μg/kg at location S06. No herbicides were detected in surface soil from the Main Base data set.

Surface soil samples from McCoy Annex were also analyzed for full suite TAL inorganics. This data is summarized in Table 5-2. No detected concentrations of antimony, cadmium, cobalt, nickel, silver, sodium, and thallium were reported. Twelve inorganics were present in the majority of the samples analyzed. These compounds and the range of values detected were as follows: aluminum, 1570 mg/kg to 5,180 mg/kg; arsenic 0.69 mg/kg to 1.3 mg/kg; barium, 1.8 mg/kg to 44.3 mg/kg; calcium 527 mg/kg to 40,800 mg/kg; chromium 2.4 mg/kg to 9.3 mg/kg; iron 195 mg/kg to 787 mg/kg; lead 1.1 mg/kg to 33 mg/kg; magnesium 25.3 mg/kg to 408 mg/kg; manganese 1.1 mg/kg to 14.8 mg/kg; mercury 0.02B mg/kg to 0.04 mg/kg; vanadium 1.3 mg/kg to 4.9 mg/kg; and zinc 0.4 mg/kg to 4.0 mg/kg. Also reported were detections of beryllium, copper, potassium, and selenium. In all, the detections of inorganic constituents reported appear to be within expected ranges for such naturally occurring constituents.

5.2 SUBSURFACE SOIL. Chemical analytical data from the collection and analysis of background subsurface soil samples is summarized (detections only) in Tables 5-3 and 5-4. Table 5-3 presents results for the Main Base data set, and Table 5-4 presents the McCoy Annex data set. Subsurface soil samples were collected

Table 5-3
Subsurface Soil
Main Base Data Set

Background Sampling Report
Naval Training Center, Orlando
Orlando, Florida

Location [1]		S01	S02	S03	S04	S05	S011	S012	S013	S014	S015
Lab Identifier		ORB00101	ORB00201	ORB00301	ORB00401	ORB00501	ORB01101	ORB01201	ORB01301	ORB01401	ORB01-501
Collect Date		25-Oct-94	25-Oct-94	25-Oct-94	26-Oct-94	26-Oct-94	29-Oct-94	29-Oct-94	11-Nov-94	29-Oct-94	28-Oct-94
Feet bls		4	6	4	6	2	6	4	4	4	5
	MCG[2]										
Volatiles µg/kg											
Toluene	200	--	--	--	--	--	--	2 J	--	--	--
Semivolatiles µg/kg											
bis(2-Ethylhexyl)phthalate	11,000	--	--	--	390 J	--	--	--	--	--	--
Di-n-butylphthalate	240,000	470	420	530	700	680	--	--	--	--	--
Di-n-octylphthalate	**	170 J	--	--	--	--	--	--	--	--	--
Pesticides/PCBs µg/kg											
4,4'-DDE	200	--	--	--	--	--	--	130 J	--	--	--
4,4'-DDT	500	--	--	--	--	--	--	87 J	--	--	--
alpha-Chlordane	2,100	--	--	--	--	--	--	43 J	--	--	--
gamma-Chlordane	2,100	--	--	--	--	--	--	43 J	--	--	--
Inorganics, mg/kg											
Aluminum	NC	--	3110	3010	357	--	525	42.8	1500	370	179
Arsenic	NC	--	0.6 B	0.75 B	--	--	0.78 B	--	--	--	0.37 J
Barium	NC	--	1.6 B	2.8 B	0.95 B	--	0.48 J	0.48 J	8.7 B	0.33	0.55 J
Beryllium	NC	--	--	--	--	--	--	--	--	--	--
Calcium	--	83.4 B	141 B	80.6 B	41.7 J	8.1 J	34.3 J	90.4 B	42 J	24.5 J	59.3 J
Chromium	NC	--	3.7	6.2	1.8 B	0.46 B	1.2 B	0.52 B	1.6 B	0.84	0.92 B
Cobalt	NC	--	--	--	0.78 B	--	--	--	--	--	--
Iron	--	39.9 J	239 J	368 J	88.9 J	3.8 J	111	21.7	400	42.6	76.6

See notes at end of table.

Table 5-3 (Continued)
Subsurface Soil
Main Base Data Set

Background Sampling Report
Naval Training Center, Orlando
Orlando, Florida

Location [1]		S01	S02	S03	S04	S05	S011	S012	S013	S014	S015
Lab Identifier		ORB00101	ORB00201	ORB00301	ORB00401	ORB00501	ORB01101	ORB01201	ORB01301	ORB01401	ORB01-501
Collect Date		25-Oct-94	25-Oct-94	25-Oct-94	26-Oct-94	26-Oct-94	29-Oct-94	29-Oct-94	11-Nov-94	29-Oct-94	28-Oct-94
Feet bls		4	6	4	6	2	6	4	4	4	5
Inorganics (Continued)											
Lead	NC	0.35 J	1.7 J	8.5 J	0.96 J	--	0.32 B	--	3.3	0.48	1.6
Magnesium	--	6.4 B	33.7 B	11.8 B	--	--	25 J	4.5 J	27.6 J	13.8	10.2 J
Manganese	NC	0.53 B	0.85 B	0.49 B	1.7 B	--	--	--	1.6 B	--	--
Potassium	--	--	--	--	--	--	--	--	92.4 B	--	--
Selenium	NC	0.8 J	0.55 J	0.53 B	--	--	--	--	--	--	--
Vanadium	NC	--	1.7 B	2.8 B	--	--	--	--	0.66 B	--	--
Zinc	NC	--	0.49 B	--	--	--	--	--	--	--	5.1

[1]Location as shown on Figures 3-1 and 3-2.
[2]MCG = Soil Cleanup Goals for the Military Sites, Florida Department of Environmental Protection, memorandum from L. Mora-Applegate to J. Crane, April 5, 1995. Leachability-based goals are shown for subsurface soil.

Notes: μg/kg = microgram per kilogram
-- = Nondetect or cleanup goal not available.
J = Estimated Value.
PCB = polychlorinated biphenyl.
DDE = dichlorodiphenyldichbroethene
DDT = dichlorodiphenyltrichloroethane.
mg/kg = milligram per kilogram.
NC = Not calculated.
B = Reported concentration is between the instrument detection limit and the contract required detection limit.

Table 5-4
Subsurface Soil
McCoy Annex Data Set

Background Sampling Report
Naval Training Center, Orlando
Orlando, Florida

Location [1]		S06	S06	S07	S08	S09	S010	S010	S016
Lab Identifier		ORB00601	ORB00601D	ORB00701	ORB00801	ORB00901	ORB01001	ORB01001D	ORB01601
Collect Date		27-Oct-94	27-Oct-94	27-Oct-94	27-Oct-94	27-Oct-94	28-Oct-94	28-Oct-94	28-Oct-94
Feet bls		6	6	2	4	2	4	4	4
	MCG[2]								
Semivolatiles µg/kg									
Benzo(g,h,i)perylene	320,000	--	98 J	--	--	--	--	230 J	--
Di-n-octylphthalate	**	--	--	--	230 J	--	--	--	--
Fluoranthene	280,000	--	--	--	--	--	--	--	120 J
Inorganics, mg/kg									
Aluminum	NC	10300	10800	1620	2340	379	8870	8410	1800
Arsenic	NC	1.3 B	1.5 B	0.68 B	0.52 B	1 J	1.5 B	1.1 B	0.39 B
Barium	NC	7.6 B	11.7 B	1.1 B	0.8 B	1 B	10.1 B	10.9 B	2 B
Beryllium	NC	0.1 B	0.1 B	--	0.11 B	--	0.06 B	0.08 B	--
Calcium	--	19.8 J	26.3 J	109 B	865 B	27.1 J	67 J	66.9 J	102 B
Chromium	NC	8.7	8.3	2.2 B	5.8	1 B	8.5	8.6	2.2 B
Cobalt	NC	0.67 B	0.64 B	--	0.7 B	--	--	--	--
Copper	NC	--	--	--	1.4 B	--	--	--	--
Iron	--	270 J	314 J	317 J	35.1 J	1810 J	269	239	63.2
Lead	NC	5.2 J	6.6 J	0.89 J	3.5 J	0.41 J	4.5	5.1	1.7
Magnesium	--	20.2 B	25.4 B	9.5 B	4.9 B	4.8 B	39.7 J	31.7 J	19.4 J

See notes at end of table.

Table 5-4 (Continued)
Subsurface Soil
McCoy Annex Data Set

Background Sampling Report
Naval Training Center, Orlando
Orlando, Florida

Location [1]		S06	S06	S07	S08	S09	S010	S010	S016
Lab Identifier		ORB00601	ORB00601D	ORB00701	ORB00801	ORB00901	ORB01001	ORB01001D	ORB01601
Collect Date		27-Oct-94	27-Oct-94	27-Oct-94	27-Oct-94	27-Oct-94	28-Oct-94	28-Oct-94	28-Oct-94
Feet bls		6	6	2	4	2	4	4	4
Inorganics (Continued)									
Manganese	NC	0.3 B	0.4 B	0.37 B	--	0.3 B	--	--	--
Mercury	NC	0.07	0.07	0.02 B	0.05	--	0.07	0.07	0.06
Nickel	NC	7.4 B	7.2 B	--	--	--	2.3 B	--	--
Selenium	NC	0.64 J	0.9 J	0.5 B	--	--	--	--	--
Silver	NC	--	--	0.53 B	--	--	--	--	--
Vanadium	NC	4.7 B	5.1 B	2.1 B	4.7 B	0.74 B	2.5 B	2.6 B	1.2 B
Zinc	NC	0.33 B	--	--	--	--	--	--	--

[1]Location as shown on Figures 3-3.
[2]MCG = Soil Cleanup Goals for the Military Sites, Florida Department of Environmental Protection, memorandum from L. Mora-Applegate to J. Crane, April 5, 1995. Leachability-based goals are shown for subsurface soil.

Notes: NC = not calculated.
μg/kg = microgram per kilogram
-- = Nondetect or cleanup goal not available.
J = Estimated Value.
** = extremely limited solubility; no upper limit on concentration.
mg/kg = milligram per kilogram.
NJ = Presumptive evidence for the presence of the material at an estimated value.
B = Reported concentration is between the instrument detection limit and the contract required detection limit.

at depths ranging from 2 feet to 6 feet bls, depending on the location of the water table. Complete analytical data from the analysis of background subsurface soil samples is presented in Appendix E.

5.2.1 Main Base Data Set Subsurface Soil Analyses of subsurface soil samples for volatile organic compounds showed the presence of toluene at a concentration of 2J µg/kg at sample location S012 at the Main Base. Toluene was also detected at this concentration in the surface soil sample from this location.

Three semivolatile organic compounds were detected in the subsurface soil in the Main Base data set. Bis(2-ethylhexyl)phthalate at a concentration of 390J µg/kg was detected at S04 (Area "C"). Di-n-octylphthalate at a concentration of 170J µg/kg was detected at S01 (Main Base). Di-n-butylphthalate was detected at concentrations of 470 µg/kg, 420 µg/kg, 530 µg/kg, 700 µg/kg, and 680 µg/kg at locations S01 (Main Base), S02 (Main Base), S03 (Main Base), S04 (Area "C"), and S05 (Herndon), respectively. These phthalate esters are common laboratory contaminants and may not be representative of existing site conditions at the background locations.

For the Main Base data set, no PCBs were detected in the samples analyzed. Four pesticides, 4,4'-DDE, 4,4'-DDT, alpha-chlordane and gamma-chlordane were reported at concentrations of 130J µg/kg, 87J µg/kg, 43J µg/kg, and 43J µg/kg, respectively. All four of these detections occurred at sample location S012 on the Main Base. These low level pesticide detections in the subsurface are consistent with detections of the same pesticides at this location in the surface soil. No herbicides were detected in Main Base subsurface soil.

Subsurface soil from the Main Base was also analyzed for full suite TAL inorganics. No detected concentrations of antimony, beryllium, cadmium, copper, mercury, nickel, silver, sodium, and thallium were reported. Six inorganics were present in most of the samples analyzed. These compounds and the range of values detected were as follows: aluminum, 42.8 mg/kg to 3,110 mg/kg; barium, 0.33 mg/kg to 2.8B mg/kg; calcium 8.1J mg/kg to 141B mg/kg; chromium 0.46B mg/kg to 6.2 mg/kg; iron 3.8J mg/kg to 400 mg/kg; lead 0.32B mg/kg to 8.5J mg/kg. Isolated detections of arsenic, cobalt, manganese, potassium, selenium, vanadium, and zinc were also reported. In all, the detections of inorganic constituents reported appear to be within expected ranges for such naturally occurring constituents.

5.2.2 McCoy Annex Data Set Subsurface Soil VOCs were not detected in subsurface soil samples from the McCoy Annex.

Three SVOCs were detected in McCoy Annex subsurface soil. Fluoranthene was detected at a concentration of 120J µg/kg at location S016. This result is consistent with the elevated concentrations of PAHs (including fluoranthene) found in surface soil at the same location. Di-n-octylphthalate was detected at a concentration of 230J µg/kg at location S08. This phthalate ester is a common laboratory contaminant and the results may not be reflective of existing site conditions at this background location. Benzo(g,h,i)perylene was detected at concentrations of 98J µg/kg and 230J µg/kg at locations S06 and S010 respectively.

No pesticides and/or PCBs or herbicides were detected in the subsurface soil samples collected from the McCoy Annex data set.

Subsurface soil from McCoy Annex was also analyzed for full suite TAL inorganics. No detected concentrations of antimony, cadmium, potassium, or sodium were reported. Eleven inorganics were present in the majority of the samples analyzed. These compounds and the range of values detected were as follows: aluminum, 379 mg/kg to 10,800 mg/kg; arsenic 0.39 mg/kg to 1.5 mg/kg; barium, 0.8 mg/kg to 11.7 mg/kg; calcium 19.8J mg/kg to 865B mg/kg; chromium 1.0B mg/kg to 8.7 mg/kg; iron 35.1J mg/kg to 1,810J mg/kg; lead 0.41J mg/kg to 6.6J mg/kg; magnesium 4.8B mg/kg to 39.75 mg/kg; mercury 0.02B mg/kg to 0.07 mg/kg, and vanadium 0.74B mg/kg to 5.1B mg/kg. Also reported were detections of beryllium, cobalt, copper, manganese, nickel, selenium, silver, and zinc. In all, the detections of inorganic constituents reported appear to be within expected ranges for such naturally occurring constituents.

5.3 GROUNDWATER. Chemical analytical data from the collection and analysis of background groundwater samples are summarized (detections only) in Tables 5-5 and 5-6. Table 5-5 presents results for the Main Base data set and Table 5-6 presents the McCoy Annex data set. Complete analytical data from the analysis of background groundwater samples is presented in Appendix E. Well locations are shown on Figures 3-1, 3-2, and 3-3. Groundwater samples were collected using a low-flow technique and were unfiltered.

5.3.1 Main Base Data Set Groundwater The only VOC detected in groundwater from the Main Base data set was chloroform, detected in a groundwater sample, and a duplicate from well OLD-OR-02 at 0.7J $\mu g/\ell$ and 0.6J $\mu g/\ell$, respectively. Chloroform concentrations are below the Florida Department of Environmental Protection (FDEP) Groundwater Guidance Concentration of 6 $\mu g/\ell$.

Di-n-octylphthalate was the only SVOC detected in groundwater from the Main Base data set, at a concentration of 2J $\mu g/kg$ in monitoring well OLD-OR-02. This phthalate ester is a common laboratory contaminant and the results may not be reflective of existing site conditions at this background location.

No pesticides and/or PCBs or herbicides were detected in groundwater from the Main Base data set.

Groundwater samples from the Main Base data set were also analyzed for full suite TAL inorganics. No detected concentrations of beryllium, cobalt, nickel, or silver were reported. Ten inorganics were present in most of the samples analyzed. These compounds and the range of values detected were as follows: aluminum, 22.7B $\mu g/\ell$ to 3,690 $\mu g/\ell$; arsenic, 2B $\mu g/\ell$ to 3.7B $\mu g/\ell$; barium, 2B $\mu g/\ell$ to 14.6B $\mu g/\ell$; calcium, 7,250J $\mu g/\ell$ to 35,500 $\mu g/\ell$; iron, 16B $\mu g/\ell$ to 1,100 $\mu g/\ell$; magnesium, 713J $\mu g/\ell$ to 4,350B $\mu g/\ell$; manganese, 2.4B $\mu g/\ell$ to 12.6B $\mu g/\ell$; potassium, 419B $\mu g/\ell$ to 5,460 $\mu g/\ell$; sodium, 814J $\mu g/\ell$ to 19,800 $\mu g/\ell$; and vanadium, 3.1B $\mu g/\ell$ to 11B $\mu g/\ell$. Isolated detections of antimony, cadmium, chromium, copper, lead, mercury, selenium, thallium, and zinc were also reported.

Radiological analysis of Main Base data set groundwater detected gross alpha radiation at 3.1J pCi/ℓ and 4.2J pCi/ℓ in wells OLD-OR-02 and OLD-OR-03, respectively. Gross beta radiation was detected in 3 of 5 wells at concentrations ranging from 4.4 pCi/ℓ to 6.3 pCi/ℓ. These concentrations are not unusual for the surficial aquifer in Orange County. All detections of gross alpha and beta radiation are below FDEP Groundwater Guidance Concentrations.

Table 5-5
Groundwater
Main Base Data Set

Background Sampling Report
Naval Training Center, Orlando
Orlando, Florida

Well ID		OLD-OR-01	OLD-OR-02	OLD-OR-02	OLD-OR-03	OLD-OR-04	OLD-OR-05
Lab Identifier		ORG00101	ORG00201	ORG00201D	ORG00301	ORG00401	ORG00501
Collect Date		11-Nov-94	10-Nov-94	10-Nov-94	10-Nov-94	10-Nov-94	10-Nov-94
	FLMCL[1]						
Volatiles µg/ℓ							
Chloroform	6 [2]	--	0.7 J	0.6 J	--	--	--
Semivolatiles µg/ℓ							
Di-n-octylphthalate	140 [3]	--	--	2 J	--	--	2 J
Inorganics, µg/ℓ							
Aluminum	**200** [4]	**434**	--	22.7 B	**970**	**688**	**3690**
Antimony	6	--	--	1.9 B	--	--	--
Arsenic	50	--	3.7 B	--	2 B	2 B	2.7 B
Barium	2,000	2 B	4.5 B	4.5 B	5.3 B	8.5 B	14.6 B
Cadmium	5	--	--	--	2.8 B	--	--
Calcium	--	35,500	28,500 J	27,900 J	7,250 J	27,000 J	16,600 J
Chromium	100	--	--	--	2.4 B	--	5.4 B
Copper	1,000 [4]	--	--	--	--	--	3.6 B
Iron	**300** [4]	**1060**	16 B	16.9 B	197	42.8 B	**1100**
Lead	15	1.7 B	--	--	--	--	2.3 J
Magnesium	--	4,350 B	2,990 J	2,890 J	713 J	1,540 J	3,470 J
Manganese	50 [4]	11.4 B	3 B	2.8 B	9.5 B	2.4 B	12.6 B
Mercury	2	--	--	0.05 J	--	--	0.12 J
Potassium	--	4,840 B	5,460	4,830 B	419 B	1,090 B	1,510 B
Selenium	50	--	5.4	4.3 J	--	--	--
Sodium	160,000	5,600	19,800 J	19,100 J	814 J	7,590 J	3,160 J
Thallium	2	--	--	1.9 B	--	--	--
Vanadium	49 [3]	--	11 B	9.3 B	3.1 B	7.4 B	10.6 B
Zinc	5,000 [4]	2 B	--	--	--	--	--

See notes at end of table.

Table 5-5 (Continued)
Groundwater
Main Base Data Set

Background Sampling Report
Naval Training Center, Orlando
Orlando, Florida

Well ID		OLD-OR-01	OLD-OR-02	OLD-OR-02	OLD-OR-03	OLD-OR-04	OLD-OR-05
Lab Identifier		ORG00101	ORG00201	ORG00201D	ORG00301	ORG00401	ORG00501
Collect Date		11-Nov-94	10-Nov-94	10-Nov-94	10-Nov-94	10-Nov-94	10-Nov-94
Radiological, pCi/ℓ							
Gross alpha	15	--	--	3.1 J	4.2 J	--	7.4 J
Gross beta	4 mrem/yr	4.4	6.3	5.7 J	--	--	4.4 J
Total Suspended Solids, mg/ℓ	--	3	1 U	1 U	1 U	1 U	21

[1] FLMCL = Florida Maximum Contaminant Levels, Florida Administrative Code 62-550, "Safe Drinking Water Act," September 1994. (Standard indicated for chloroform is the standard for total trihalomethanes, i.e., the sum of concentrations of chloroform, bromodichloromethane, dibromochloromethane, and bromoform.) Refer to 56 FR 3579 and Florida Administrative Code, 17-550. Values indicated for aluminum, copper, iron, manganese, and zinc are secondary MCL standards.
[2] Guidance (carcinogen).
[3] Guidance (systemic toxicant).
[4] Secondary standard.

Notes: Bold/shaded values indicate result exceeds MCG.
μg/ℓ = microgram per liter.
-- = Nondetect or MCL not available.
J = Estimated Value.
B = Reported concentration is between the instrument detection limit and the contract required detection limit.
pCi/ℓ = picocuries per liter.
mrem = millirem (roentgen equivalent man).

Table 5-6
Groundwater
McCoy Annex Data Set

Background Sampling Report
Naval Training Center, Orlando
Orlando, Florida

Well ID		OLD-OR-06	OLD-OR-07	OLD-OR-07	OLD-OR-08	OLD-OR-09	OLD-OR-010
Lab Identifier		ORG00601	ORG00701	ORG00701D	ORG00801	ORG00901	ORG01001
Collect Date		09-Nov-94	09-Nov-94	09-Nov-94	09-Nov-94	10-Nov-94	10-Nov-94
	FLMCL[1]						
Volatiles µg/ℓ							
Bromodichloromethane	0.6 [2]	1	--	--	--	--	--
Chloroform	6 [2]	4	1	1	0.6 J	--	0.5 J
Semivolatiles µg/ℓ							
Di-n-butylphthalate	--	--	2 J	--	--	--	--
Di-n-octylphthalate	--	--	--	3 J	2 J	--	--
Inorganics, µg/ℓ							
Aluminum	**200** [4]	**2,480**	118 B	115 B	**3,510**	**7,260**	**3,080**
Antimony	6	--	--	--	--	2.2 B	--
Arsenic	50	2.8 B	--	--	--	1.7 B	--
Barium	2,000	17.9 B	9.1 B	8.4 B	9.7 B	71 B	33 B
Calcium	--	2,660 J	4,690 J	4,560 J	42,500 J	9,320 J	14,500 J
Chromium	100	2.7 B	--	--	4.6 B	6 B	2.4 B
Copper	1,000 [4]	--	--	--	1.8 B	--	--
Iron	**300** [4]	270	**1,540**	**1,510**	239	**1,070**	**301**
Magnesium	--	722 J	1,560 J	1,500 J	805 J	4,930 J	1,890 J
Manganese	50 [4]	5.4 B	12.5 B	11.7 B	5.6 B	14.1 B	10.8 B
Mercury	2	--	0.05 J	0.03 J	0.06 J	0.06 J	0.06 J
Potassium	--	--	750 B	--	--	--	--
Sodium	160,000	16,700 J	6,860 J	7,080 J	1,170 J	2,860 J	18,600 J
Vanadium	49 [3]	16.8 B	6 B	2.9 B	19.2 B	13.5 B	13.7 B
Radiological, pCi/ℓ							
Bismuth-212	--	--	232 J	--	--	--	--
Gross Alpha	15	8.1 J	16.2 J	2.2 J	5.9 J	9 J	2.4 J
Gross Beta	4 mrem/yr	--	3 J	--	--	--	--

See notes at end of table.

Table 5-6 (Continued)
Groundwater
McCoy Annex Data Set

Background Sampling Report
Naval Training Center, Orlando
Orlando, Florida

Well ID		OLD-OR-06	OLD-OR-07	OLD-OR-07	OLD-OR-08	OLD-OR-09	OLD-OR-010
Lab Identifier		ORG00601	ORG00701	ORG00701D	ORG00801	ORG00901	ORG01001
Collect Date		09-Nov-94	09-Nov-94	09-Nov-94	09-Nov-94	10-Nov-94	10-Nov-94
Total Suspended Solids, mg/L	--	4	1U	1U	10	4	14

[1] FLMCL = Florida Maximum Contaminant Levels, Florida Administrative Code 62-550, "Safe Drinking Water Act," September 1994. (Standard indicated for bromodichloromethane and chloroform is the standard for total trihalomethanes, i.e., the sum of concentrations of chloroform, bromodichloromethane, dibromochloromethane, and bromoform). Refer to 56 FR 3579 and Florida Administrative Code, 17-550. Values indicated for aluminum, copper, iron, manganese and zinc are secondary MCL standards.
[2] Guidance (carcinogen).
[3] Guidance (systemic toxicant).
[4] Secondary standard.

Notes: Bold/shaded values indicate result exceeds MCG.
$\mu g/\ell$ = micrograms per liter.
-- = Nondetect or MCL not available.
J = estimated value.
mrem = millirem.

5.3.2 McCoy Annex Data Set Groundwater VOCs detected in groundwater from the McCoy Annex data set included bromodichloromethane (1 μg/ℓ in monitoring well OLD-OR-06) and chloroform, detected between 0.5J μg/ℓ and 4 μg/ℓ in all wells except OLD-OR-09. Bromodichloromethane exceeds the FDEP Groundwater Guidance Concentration of 0.6 μg/ℓ; chloroform concentrations are below the FDEP Groundwater Guidance Concentration of 6 μg/ℓ.

SVOCs detected in McCoy Annex groundwater included di-n-butylphthalate (2J μg/ℓ in well OLD-OR-07) and di-n-octylphthalate (3J μg/kg, well OLD-OR-07 and 2J μg/kg, well OLD-OR-08). These phthalate esters are common laboratory contaminants and the results may not be reflective of existing site conditions at this background location.

No pesticides and/or PCBs or herbicides were detected in groundwater from McCoy Annex.

Groundwater samples from the McCoy Annex were also analyzed for full suite TAL inorganics. No detected concentrations of beryllium, cadmium, cobalt, lead, nickel, selenium, silver, thallium, or zinc were reported. Ten inorganics were present in most of the samples analyzed. These compounds and the range of values detected were as follows: aluminum, 115B μg/ℓ to 7,260 μg/ℓ; barium, 8.4B μg/ℓ to 71B μg/ℓ; calcium, 2,660J μg/ℓ to 42,500 μg/ℓ; chromium, 2.4B μg/ℓ to 6B μg/ℓ; iron, 239 μg/ℓ to 1,540 μg/ℓ; magnesium, 722J μg/ℓ to 4,930J μg/ℓ; manganese, 5.4B μg/ℓ to 14.1B μg/ℓ; mercury, 0.03J μg/ℓ to 0.06J μg/ℓ; sodium, 1,170J μg/ℓ to 18,600J μg/ℓ; and vanadium, 2.9B μg/ℓ to 19.2B μg/ℓ. Isolated detections of antimony, arsenic, copper, and potassium were also reported.

Radiological analysis of McCoy Annex groundwater detected gross alpha radiation in all five wells between 2.2J pCi/ℓ and 16.2J pCi/ℓ. The FDEP Groundwater Guidance Concentration of 15 pCi/ℓ was exceeded in well OLD-OR-07. However, a duplicate analysis of groundwater from this well detected only 2.2J μg/ℓ. Gross beta radiation and bismuth-212 were detected in one sample from well OLD-OR-07 (3J pCi/ℓ and 232J pCi/ℓ, respectively), but were not detected in the duplicate sample. These concentrations are not unusual for the surficial aquifer in Orange County.

5.4 DATA EVALUATION. The data in each background data set were evaluated to determine if consistent populations were present, to confirm that the Main Base and McCoy Annex data sets truly represented separate background populations, and to establish if the data supported establishing background concentrations of anthropogenic organic compounds such as PAHs and pesticides. These evaluations were performed using a combination of statistics and professional judgement.

To determine if the data represented consistent populations which would define representative background values, questionable data points were identified through the use of a nonparametric outside value identification method (Hoaglin, Mosteller, and Tukey, 1983). This method is based on the definition of a "fourth spread" or "interquartile range," which is the numerical difference between the lower fourth and upper fourth; the lower fourth and upper fourth represent values greater than or equal to the 25th and 75th percentiles, respectively. By using the concept of the "fourth spread," extreme values at either end of the distribution do not affect the measurement of the spread of the population around its central (median) value.

Values that lie greater than 1.5 times the fourth spread were considered "outside" values. Outside values are defined by taking the difference between the upper and lower fourths, multiplying by 1.5, and adding the result to the upper fourth or subtracting the result from the lower fourth. These values are not true statistical outliers, but are distributed far enough from the sample's central value (or central tendency) to be suspect. Outside values were evaluated further as described below.

Samples were grouped by sample media. Outside values were then identified for each sample media (i.e., groundwater, subsoil, and surface soil). Analytical values rejected by the laboratory or validators were excluded from the procedure, but all other nonrejected values were included. Duplicate samples and re-analyses were included as separate and distinct entities. Details for the outside counts (including values and references) are included in Appendix G.

The resulting outside values were evaluated to determine if there were any field or acquisition factors that might explain their anomalous behavior. The general guideline followed was that samples would be retained unless there was specific evidence to exclude them (such as site contamination discovered after sampling, geographics, site history, acquisitional problems, laboratory artifacts, etc.).

Following the above evaluation, additional evaluations were performed to gain a better understanding of the underlying value distributions and systematic differences (such as varying detection limits) between the Main Base data set and the McCoy Annex data set. Thus, a comparison of populations from Main Base and McCoy was performed for each media to examine if the initial presumption that separate background data sets would be required was valid.

As part of this comparison, samples were grouped by sample media and background data set. As with the previous evaluation, analytical values that were rejected by the laboratory or validators were excluded from the procedure. All other nonrejected values were included. Duplicate samples and reanalyses were included as separate and distinct entities.

The population comparison was done using a Mann-Whitney U-test procedure with an alpha of 0.95. The U test is a nonparametric analog of the Student's t test, in that it determines if two samples are likely to have been drawn from a single population (at a specified confidence level). However, the U test does not depend on the assumption that the populations of the two samples are normally distributed and of equal variance as is true for the t test.

Results from each analytical parameter for the Main Base data set and the McCoy Annex data set were analyzed by media. The first determination was whether or not the two data sets were likely to have been derived from the same population. If this assumption was confirmed (with a 95 percent confidence level), then no further analysis was conducted for that analyte and it was concluded that there was no statistical difference between the background groups. If, on the other hand, this assumption was rejected (they were not derived from the same population), a determination was made as to which sample group had the larger central value. This determination was based on the relative values of the median of each group.

Table 5-7 lists by media the parameters with different populations between Main Base and McCoy. Parameters from the same population are not listed. Also listed

Table 5-7
Population Differences
Main Base and McCoy Annex Data Sets

Background Sampling Report
Naval Training Center, Orlando
Orlando, Florida

Groundwater

Main Base Higher
- Potassium

McCoy Annex Higher
- Barium
- Gross Alpha
- Magnesium

Subsurface Soil

Main Base Higher
- None

McCoy Annex Higher
- Aluminum
- Barium
- Beryllium
- Chromium
- Cobalt
- Mercury
- Nickel
- Vanadium

McCoy Annex (Higher Detection Limits)
- Arsenic
- Silver
- (bis)2-ethylhexyl phthalate

Surface Soil

Main Base Higher
- None

McCoy Annex Higher
- Aluminum
- Arsenic
- Vanadium

McCoy Annex (Higher Detection Limits)
- Aroclor-1260
- Benzo(g,h,i) perylene
- Di-n-butyl phthalate
- Dieldrin
- Potassium
- Sodium
- Alpha-Chlordane
- Gamma-Chlordane

are instances of elevated detection limits that influenced the population comparisons. Specific details for the outside values can be found in Appendix G.

In general, there are few differences between the Main Base and McCoy Annex groundwater data sets. Accordingly, groundwater will be reported as a single background group for both the main base and the McCoy Annex. For soil, however, there are appreciable differences, with McCoy Annex tending to report higher values than Main Base in almost every case. Because of the marked differences in the soil (surface and subsurface), the soil media were split into two distinct background groups representing the Main Base and McCoy Annex.

Accordingly, five background groups have been designated: (1) groundwater, (2) surface soil for the Main Base data set, (3) subsurface soil for the Main Base data set, (4) surface soil for the McCoy Annex data set, and (5) subsurface soil for the McCoy Annex data set.

To determine an appropriate background value for each analyte represented in a background group, descriptive statistics were run on each of the five background groups. These statistics are presented in Appendix G. From these statistics, the arithmetic mean of sample analytes that were above detection limits were selected as representative background analyte values. These background values will be used for data evaluation and comparison consistent with the NTC, Orlando, sites these background values represent. Background analyte values are presented in Tables 5-8 through 5-12 by background group and media. Inorganics that were not detected in the background sampling program and all organic compounds will be evaluated on a risk basis during the site screening process.

5.4.1 Evaluation of Surface Soil Background Data Sets

5.4.1.1 Main Base Data Set All outside values identified in Appendix G were deemed suitable for inclusion in this background data set. Organic compounds detected in surface soil were also evaluated, and professional judgement was used to eliminate all organics from the Main Base surface soil background data set.

Toluene was detected in trace concentrations at 3 of the 10 surface soil sample locations. Benzo(g,h,i)perylene was detected at two sample locations. The pesticides detected in Main Base surface soil were from 3 of 10 sample locations. All of the compounds were not detected frequently enough to warrant their inclusion in the surface soil background data set. Reported concentrations of di-n-butyl-phthalate were attributed to laboratory artifacts, and this compound was also eliminated from the surface soil background.

Calculated statistics for the Main Base surface soil background data set are provided in Table 5-8.

5.4.1.2 McCoy Annex Data Set All outside values identified in Appendix G were deemed suitable for inclusion in this background data set, with the exception of PAHs detected at sample locations S09 and S016. Other organic compounds detected in surface soil were also evaluated, and professional judgement was used to eliminate all organics from the McCoy Annex surface soil background data set.

Toluene was detected at a trace concentration at only one of the six surface soil sample locations. The PAHs detected in McCoy Annex surface soil were concentrated

Table 5-8
Orlando Background Surface Soil
Main Base Data Set

Background Sampling Report
Naval Training Center, Orlando
Orlando, Florida

Chemical Name	Number Detects/ Total Sampled	Minimum Level Reported	Maximum Level Reported	ADL Average Value	Background Screening [1]	MCG [2]	RBC [3]
Inorganics, mg/kg							
Aluminum	11/11	69.400	1940.000	1043.855	2088	75,000	78,000
Antimony	0/11	N/A	N/A	N/A	N/A	N/A	N/A
Arsenic	8/11	0.380	0.750	0.518	**1.0**	**0.7**	23
Barium	10/11	1.100	10.000	4.340	8.7	5,000	5,500
Beryllium	2/11	0.040	0.050	0.045	0.09	0.1	0.15
Cadmium	1/11	0.490	0.490	0.490	0.98	37	39
Calcium	11/11	39.600	124000.000	12647.418	25295	N/A	N/A
Chromium	11/11	0.620	5.600	2.284	4.6	66,000/150 [4]	78,000/390 [4]
Cobalt	0/11	N/A	N/A	N/A	N/A	N/A	N/A
Copper	3/11	1.500	2.600	2.033	4.1	2,900	2,900
Iron	11/11	25.600	575.000	356.236	712	N/A	N/A
Lead	11/11	1.100	23.200	7.236	14.5	500	N/A
Magnesium	11/11	6.500	1330.000	163.936	328	N/A	N/A
Manganese	11/11	0.370	12.500	4.034	8.1	10,000	390
Mercury	4/11	0.010	0.080	0.033	0.07	23	23
Nickel	1/11	2.200	2.200	2.200	4.4	1,500	1,600
Potassium	2/11	77.400	79.900	78.650	157	N/A	N/A
Selenium	3/11	0.440	0.530	0.473	0.95	390	390
Silver	2/11	0.490	1.300	0.895	1.8	380	390
Sodium	1/11	45.700	45.700	45.700	91.4	N/A	N/A
Thallium	1/11	1.000	1.000	1.000	2.0	N/A	N/A

See notes at end of table.

Table 5-8 (Continued)
Orlando Background Surface Soil
Main Base Data Set

Background Sampling Report
Naval Training Center, Orlando
Orlando, Florida

Chemical Name	Number Detects/ Total Sampled	Minimum Level Reported	Maximum Level Reported	ADL Average Value	Background Screening [1]	MCG [2]	RBC [3]
Inorganics (Continued)							
Vanadium	10/11	0.530	5.700	1.555	3.1	480	550
Zinc	9/11	0.420	31.500	8.580	17.2	23,000	23,000

[1]The background screening value is twice the average of detected concentrations for inorganic analytes.
[2]MCG = Soil Cleanup Goals for the Military Sites, Florida Department of Environmental Protection, memorandum from L. Mora-Applegate to J. Crane, April 5, 1995.
[3]RBC = Risk-based Concentration Table, USEPA Region III, January-June 1995 (issued March 7, 1995), R. L. Smith.
[4]For chromium, MCG and RBC values given are for Cr(III) and Cr(VI), respectively.

Notes: Bolded/shaded background screening value exceeds MCG and/or RBC value.
ADL = above detection level.
mg/kg = milligram per kilogram.
N/A = Not Available or Not Applicable.

Table 5-9
Orlando Background Surface Soil
McCoy Annex Data Set

Background Sampling Report
Naval Training Center, Orlando
Orlando, Florida

Chemical Name	Number Detects/ Total Sampled	Minimum Level Reported	Maximum Level Reported	ADL Average Value	Background Screening [1]	MCG [2]	RBC [3]
Inorganics, mg/kg							
Aluminum	6/6	1570.000	5180.000	2435.000	4,870	75,000	78,000
Antimony	0/6	N/A	N/A	N/A	N/A	N/A	N/A
Arsenic	6/6	0.690	1.300	0.933	**1.9**	**0.7**	23
Barium	6/6	1.800	44.300	10.817	21.6	5,000	5,500
Beryllium	2/6	0.050	0.410	0.230	0.46	0.1	0.15
Cadmium	0/6	N/A	N/A	N/A	N/A	37	39
Calcium	6/6	527.000	40800.000	16784.000	33,568	N/A	N/A
Chromium	6/6	2.400	9.300	3.867	7.7	66,000/150 [4]	78,000/390 [4]
Cobalt	0/6	N/A	N/A	N/A	N/A	N/A	N/A
Copper	3/6	1.100	1.700	1.300	2.6	2,900	2,900
Iron	6/6	195.000	787.000	421.333	843	N/A	N/A
Lead	6/6	1.100	33.000	10.667	21.3	500	N/A
Magnesium	6/6	25.300	408.000	190.400	381	N/A	N/A
Manganese	6/6	1.100	14.800	5.400	10.8	10,000	390
Mercury	4/6	0.020	0.040	0.025	0.05	23	23
Nickel	0/6	N/A	N/A	N/A	N/A	1,500	1,600
Potassium	1/6	105.000	105.000	105.000	210	N/A	N/A
Selenium	1/6	0.570	0.570	0.570	1.1	390	390
Silver	0/6	N/A	N/A	N/A	N/A	380	390
Sodium	0/6	N/A	N/A	N/A	N/A	N/A	N/A
Thallium	0/6	N/A	N/A	N/A	N/A	N/A	N/A

See notes at end of table.

Table 5-9 (Continued)
Orlando Background Surface Soil
McCoy Annex Data Set

Background Sampling Report
Naval Training Center, Orlando
Orlando, Florida

Chemical Name	Number Detects/ Total Sampled	Minimum Level Reported	Maximum Level Reported	ADL Average Value	Background Screening [1]	MCG [2]	RBC [3]
Inorganics (Continued)							
Vanadium	6/6	1.300	4.900	2.467	4.9	480	550
Zinc	5/6	0.400	4.000	2.280	4.6	23,000	23,000

[1]The background screening value is twice the average of detected concentrations for inorganic analytes.
[2]MCG = Soil Cleanup Goals for the Military Sites, Florida Department of Environmental Protection, memorandum from L. Mora-Applegate to J. Crane, April 5, 1995.
[3]RBC = Risk-based Concentration Table, USEPA Region III, January-June 1995 (issued March 7, 1995), R. L. Smith.
[4]For chromium, MCG and RBC values given are for Cr(III) and Cr(VI), respectively.

Notes: Bolded/shaded background screening value exceeds MCG and/or RBC value.
ADL = above detection level.
mg/kg = milligram per kilogram.
N/A = Not Available or Not Applicable.

Table 5-10
Orlando Background Subsurface Soil
Main Base Data Set

Background Sampling Report
Naval Training Center, Orlando
Orlando, Florida

Chemical Name	Number Detects/ Total Sampled	Minimum Level Reported	Maximum Level Reported	ADL Average Value	Background Screening [1]	MCG [2]	RBC [3]
Inorganics, mg/kg							
Aluminum	9/11	42.800	3110.000	1059.644	2,119	N/A	78,000
Antimony	0/11	N/A	N/A	N/A	N/A	N/A	N/A
Arsenic	5/11	0.370	0.780	0.574	1.1	N/A	23
Barium	9/11	0.330	8.700	1.822	3.6	N/A	5,500
Beryllium	0/11	N/A	N/A	N/A	N/A	N/A	0.15
Cadmium	0/11	N/A	N/A	N/A	N/A	N/A	39
Calcium	11/11	8.100	141.000	57.491	115	N/A	N/A
Chromium	10/11	0.460	6.200	1.834	3.7	N/A	78,000/390 [4]
Cobalt	1/11	0.780	0.780	0.780	1.6	N/A	N/A
Copper	0/11	N/A	N/A	N/A	N/A	N/A	2,900
Iron	11/11	3.800	400.000	131.773	264	N/A	N/A
Lead	9/11	0.320	8.500	1.963	3.9	N/A	N/A
Magnesium	9/11	4.500	33.700	16.389	32.8	N/A	N/A
Manganese	5/11	0.490	1.700	1.034	2.1	N/A	390
Mercury	0/11	N/A	N/A	N/A	N/A	N/A	23
Nickel	0/11	N/A	N/A	N/A	N/A	N/A	1,600
Potassium	1/11	92.400	92.400	92.400	185	N/A	N/A
Selenium	3/11	0.530	0.800	0.627	1.3	N/A	390
Silver	0/11	N/A	N/A	N/A	N/A	N/A	390
Sodium	0/11	N/A	N/A	N/A	N/A	N/A	N/A
Thallium	0/11	N/A	N/A	N/A	N/A	N/A	N/A

See notes at end of table.

Table 5-10 (Continued)
Orlando Background Subsurface Soil
Main Base Data Set

Background Sampling Report
Naval Training Center, Orlando
Orlando, Florida

Chemical Name	Number Detects/ Total Sampled	Minimum Level Reported	Maximum Level Reported	ADL Average Value	Background Screening [1]	MCG [2]	RBC [3]
Inorganics (Continued)							
Vanadium	3/11	0.600	2.800	1.720	3.4	N/A	550
Zinc	2/11	0.490	5.100	2.795	5.6	N/A	23,000

[1]The background screening value is twice the average of detected concentrations for inorganic analytes.
[2]MCG = Soil Cleanup Goals for the Military Sites, Florida Department of Environmental Protection, memorandum from L. Mora-Applegate to J. Crane, April 5, 1995.
[3]RBC = Risk-based Concentration Table, USEPA Region III, January-June 1995 (issued March 7, 1995), R. L. Smith.
[4]For chromium, MCG and RBC values given are for Cr(III) and Cr(VI), respectively.

Notes: ADL = above detection level.
mg/kg = milligram per kilogram.
N/A = Not Available or Not Applicable.

Table 5-11
Orlando Background Subsurface Soil
McCoy Annex Data Set

Background Sampling Report
Naval Training Center, Orlando
Orlando, Florida

Chemical Name	Number Detects/ Total Sampled	Minimum Level Reported	Maximum Level Reported	ADL Average Value	Background Screening [1]	MCG [2]	RBC [3]
Inorganics, mg/kg							
Aluminum	8/8	379.000	10800.000	5564.875	11,130	N/A	78,000
Antimony	0/8	N/A	N/A	N/A	N/A	N/A	N/A
Arsenic	8/8	0.390	1.500	0.999	2.0	N/A	23
Barium	8/8	0.800	11.700	5.650	11.3	N/A	5,500
Beryllium	5/8	0.060	0.110	0.090	0.18	N/A	0.15
Cadmium	0/8	N/A	N/A	N/A	N/A	N/A	39
Calcium	8/8	19.800	865.000	160.388	321	N/A	N/A
Chromium	8/8	1.000	8.700	5.663	11.3	N/A	78,000/390 [4]
Cobalt	3/8	0.640	0.700	0.670	1.3	N/A	N/A
Copper	1/8	1.400	1.400	1.400	2.8	N/A	2,900
Iron	8/8	35.100	1810.000	414.663	829	N/A	N/A
Lead	8/8	0.410	6.600	3.488	7.0	N/A	N/A
Magnesium	8/8	4.800	39.700	19.450	38.9	N/A	N/A
Manganese	4/8	0.300	0.400	0.343	0.69	N/A	390
Mercury	7/8	0.020	0.070	0.059	0.12	N/A	23
Nickel	3/8	2.300	7.400	5.633	11.3	N/A	1,600
Potassium	0/8	N/A	N/A	N/A	N/A	N/A	N/A
Selenium	3/8	0.500	0.900	0.680	1.4	N/A	390
Silver	1/8	0.530	0.530	0.530	1.1	N/A	390
Sodium	0/8	N/A	N/A	N/A	N/A	N/A	N/A
Thallium	0/8	N/A	N/A	N/A	N/A	N/A	N/A

See notes at end of table.

Table 5-11 (Continued)
Orlando Background Subsurface Soil
McCoy Annex Data Set

Background Sampling Report
Naval Training Center, Orlando
Orlando, Florida

Chemical Name	Number Detects/ Total Sampled	Minimum Level Reported	Maximum Level Reported	ADL Average Value	Background Screening [1]	MCG [2]	RBC [3]
Inorganics (Continued)							
Vanadium	8/8	0.740	5.100	2.955	5.9	N/A	550
Zinc	1/8	0.330	0.330	0.330	0.66	N/A	23000

[1]The background screening value is twice the average of detected concentrations for inorganic analytes.
[2]MCG = Soil Cleanup Goals for the Military Sites, Florida Department of Environmental Protection, memorandum from L. Mora-Applegate to J. Crane, April 5, 1995.
[3]RBC = Risk-based Concentration Table, USEPA Region III, January-June 1995 (issued March 7, 1995), R. L. Smith.
[4]For chromium, MCG and RBC values given are for Cr(III) and Cr(VI), respectively.

Notes: For chromium, RBC values given are for Cr(III) and Cr(IV), respectively.
ADL = above detection level.
mg/kg = milligram per kilogram.
N/A = Not Available or Not Applicable.

Table 5-12
Orlando Background Groundwater

Background Sampling Report
Naval Training Center, Orlando
Orlando, Florida

Chemical Name	Number Detects/ Total Sampled	Minimum Level Reported	Maximum Level Reported	ADL Average	Background Screening [1]	FDEPG [2]	FLMCL [3]	FEDMCL [4]
Inorganics, µg/ℓ								
Aluminum	11/12	22.700	7260.000	2033.427	**4,067**	**200** [6]	N/A	N/A
Antimony	2/12	1.900	2.200	2.050	4.1	6	6	6
Arsenic	6/12	1.700	3.700	2.483	5.0	50	50	50
Barium	12/12	2.000	71.000	15.708	31.4	2000	2,000	2,000
Beryllium	0/12	N/A	N/A	N/A	N/A	4	4	4
Cadmium	1/12	2.800	2.800	2.800	5.6	5	5	5
Calcium	12/12	2660.000	42500.000	18415.000	36,830	N/A	N/A	N/A
Chromium	6/12	2.400	6.000	3.917	7.8	100	100	100
Cobalt	0/12	N/A	N/A	N/A	N/A	N/A	N/A	N/A
Copper	2/12	1.800	3.600	2.700	5.4	1000 [5]	N/A	N/A
Iron	12/12	16.000	1540.000	613.558	**1,227**	**300** [5]	N/A	N/A
Lead	2/12	1.700	2.300	2.000	4.0	15	15	15
Magnesium	12/12	713.000	4930.000	2280.000	4,560	N/A	N/A	N/A
Manganese	12/12	2.400	14.100	8.483	17.0	50 [5]	N/A	N/A
Mercury	7/12	0.030	0.120	0.061	0.12	2	2	2
Nickel	0/12	N/A	N/A	N/A	N/A	100	100	100
Potassium	7/12	419.000	5460.000	2699.857	5,400	N/A	N/A	N/A
Selenium	2/12	4.300	5.400	4.850	9.7	50	50	50
Silver	0/12	N/A	N/A	N/A	N/A	100 [5]	N/A	N/A
Sodium	12/12	814.000	19800.000	9111.167	18222	160,000	160,000	20,000
Thallium	1/12	1.900	1.900	1.900	**3.8**	**2**	**2**	**2**
Vanadium	11/12	2.900	19.200	10.318	20.6	49 [6]	N/A	N/A
Zinc	1/12	2.000	2.000	2.000	4.0	5,000 [5]	N/A	N/A

See notes at end of table.

Table 5-12 (Continued)
Orlando Background Groundwater

Background Sampling Report
Naval Training Center, Orlando
Orlando, Florida

Chemical Name	Number Detects/ Total Sampled	Minimum Level Reported	Maximum Level Reported	ADL Average	Background Screening [1]	FDEPG [2]	FLMCL [3]	FEDMCL [4]
Radionuclides, pCi/ℓ								
Gross alpha	9/12	2.200	16.200	6.500	13.0	N/A	N/A	15
Gross beta	5/12	3.000	6.300	4.760	9.5	N/A	N/A	N/A

[1]The background screening value is twice the average of detected concentrations for inorganic analytes.
[2]FDEPG = Florida Department of Environmental Protection, Groundwater Guidance Concentrations, June, 1994.
[3]FLMCL = Florida Department of Environmental Protection, Primary Drinking Water Standards, June, 1994.
[4]FEDMCL = Federal Maximum Contaminant Levels, Primary Drinking Water Regulations and Health Advisories, May, 1993.
[5]Secondary standard.
[6]Systemic toxicant.

Notes: Bolded/shaded values indicate background screening value exceeding FDEPG, FLMCL and/or FEDMCL values.
ADL = above detection level.
μg/ℓ = microgram per liter.
N/A = Not Available or Not Applicable.
pCi/ℓ = picocuries per liter.

at two sample locations. Pesticides were detected at only one sample location; likewise for the single PCB detection. All of these compounds were not detected frequently enough to warrant their inclusion in the surface soil background data set. Reported concentrations of di-n-octylphthalate were attributed to laboratory artifacts, and this compound was also eliminated from the surface soil background.

The highest concentrations of PAHs were detected at surface soil location S016. Although surface soil at this location appears contaminated with SVOCs, there was no indication that the presence of the elevated levels of PAHs impacted the naturally occurring concentrations of inorganics. This sample was also the only sample collected from the Basinger fine sand soil type at McCoy Annex. For these reasons, the inorganic results from this location have been included in the McCoy Annex surface soil background data set.

Calculated statistics for the McCoy Annex surface soil background data set are provided in Table 5-9.

5.4.2 Evaluation of Subsurface Soil Background Data Sets

5.4.2.1 Main Base Data Set All outside values identified in Appendix G were deemed suitable for inclusion in this background data set. Organic compounds detected in subsurface soil were also evaluated, and professional judgement was used to eliminate all organics from the Main Base subsurface soil background data set.

Toluene was detected at a trace concentration at 1 of the 10 subsurface soil sample locations. The pesticides detected in Main Base subsurface soil were from a single sample location. All of these compounds were not detected frequently enough to warrant their inclusion in the subsurface soil background data set. Reported concentrations of di-n-butylphthalate, bis(2-ethylhexyl)phthalate, and di-n-octylphthalate were attributed to laboratory artifacts, and these compounds were also eliminated from the subsurface soil background.

Calculated statistics for the Main Base subsurface soil background data set are provided in Table 5-10.

5.4.2.2 McCoy Annex Data Set All outside values identified in Appendix G were deemed suitable for inclusion in this background data set. Organic compounds detected in subsurface soil were also evaluated, and professional judgement was used to eliminate all organics from the McCoy Annex subsurface soil background data set.

Benzo(g,h,i)perylene was detected at two of six sample locations. Fluoranthene was detected at one sample location. These compounds were not detected frequently enough to warrant their inclusion in the surface soil background data set.

Calculated statistics for the McCoy Annex subsurface soil background data set are provided in Table 5-11.

5.4.3 Groundwater Background Data Set All outside values identified in Appendix G were deemed suitable for inclusion in this background data set. Organic compounds detected in groundwater were also evaluated, and professional judgement was used to eliminate all organics from the groundwater background data set.

Bromodichloromethane was detected in one well at McCoy Annex. Chloroform was detected in four of five wells at McCoy Annex and one of five wells at Main Base, always at concentrations below the FDEP Groundwater Guidance Concentration of 6 $\mu g/\ell$. Chloroform may be present as a laboratory artifact. Reported concentrations of di-n-butylphthalate and di-n-octylphthalate were also attributed to laboratory artifacts, and these compounds were also eliminated from the groundwater background data set.

Calculated statistics for the groundwater background data set are provided in Table 5-12.

6.0 BACKGROUND COMPARISONS

Analytes detected during site screening activities will be compared to the background analyte values. This comparison will support site characterization and risk evaluations so that risk management decisions can be made. Such decisions may determine that a site needs no additional investigations or evaluations (i.e., it can be leased or transferred). Alternatively, risk management decisions may require additional investigations or evaluations as a site enters the Installation Restoration (IR) program. Background values will also aid in selecting a remedial alternative if sites are carried through the IR program.

Comparison of site-specific data to the corresponding background data set will be point-by-point. If the maximum detected concentration of an inorganic analyte exceeds two times the average inorganic concentration detected in the background samples, then the specific sample analyte will be identified and further evaluated using professional judgement to determine the need for risk evaluation, additional investigation, or remediation. This is similar to USEPA Region IV guidance (USEPA, 1991) for CPC selection. If the analyte is below two times the average inorganic concentration detected in the background sample, then the sample will be assumed indistinguishable from background.

REFERENCES

ABB-ES, 1994a, Project Operations Plan for Site Investigations and Remedial Investigations, Naval Training Center, Orlando, Florida.

ABB-ES, 1994b, Final Draft Environmental Baseline Survey (EBS) Report, Naval Training Center, Orlando, Florida.

ABB-ES, 1995, Background Sampling Plan, Naval Training Center, Orlando, Florida.

Geraghty & Miller, 1986, Verification Study, Assessment of Potential Soil and Ground-Water Contamination at Naval Training Center, Orlando, Florida; Tampa, Florida; December.

Hoaglin, D.C., F. Mosteller, and J.W. Tukey, 1983, Understanding Robust and Exploratory Data Analysis, John Wiley and Sons, Inc.

Lichtler, W.F., W. Anderson, and B.F. Joyner, 1968, Water Resources of Orange County, Florida: U.S. Geological Survey Report of Investigations No. 50, p. 150.

NEESA, 1988, Sampling and Chemical Analysis Quality Assurance Requirements for the Navy Installation Restoration Program, Naval Energy and Environmental Support Activity, Document 20.2-047B, June.

U.S. Department of Agriculture, 1989, Soil Conservation Service, Soil Survey of Orange County, Florida, August.

U.S. Environmental Protection Agency, 1987, Data Quality Objectives for Remedial Response Activities, Development Process, Office of Emergency Remedial Response, Document EPA/540/G-87/003, March.

U.S. Environmental Protection Agency, 1988a, Laboratory Data Validation: Functional Guidelines for Evaluation of Inorganic Analysis.

U.S. Environmental Protection Agency, 1991, Supplemental Region IV Risk Assessment Guidance, March 26.

U.S. Environmental Protection Agency, 1991a, National Functional Guidelines for Organic Data Review: June.

U.S. Environmental Protection Agency, 1991b, Environmental Compliance Branch, Standard Operating Procedures and Quality Assurance Manual: Region IV, Environmental Services Division, Athens, Georgia.

APPENDIX A

SOIL BORING LOGS

Project: BRAC NTC, Orlando, Background Sampling Program	**Well ID:** OLD-OR-01	**Boring ID:** OLD-OR-01
Client: SOUTHNAVFACENGCOM	**Contractor:** Groundwater Protection, Inc.	**Job No.:** CTO-107
Horizontal coordinate:	**Date started:** 10/25/94	**Compltd:** 10/25/94
Method: 8.25" Hollow stem auger	**Casing dia.:** 2 in.	**Screened int.:** 3-13 ft. bls	**Protection level:** D
TOC elev.: Ft.	**Type of OVM.:** Porta FID	**Total dpth:** 14.0Ft.	**Dpth to ∇** 5.0* Ft.
ABB Rep.: S. Grietens	**Well development date:** 10/30/94	**Site:** Background

Depth Ft.	Laboratory Sample ID.	Sample	Recovery	Headspace (ppm)	Soil/Rock Description and comments	Lithologic symbol	Soil class.	Blows/6-in.	Well diag.
				0	QUARTZ SAND: Tan/gray/white, fine grained, good sorting, good/ moderate rounding, with trace silts.		SP	posthole	
				0				posthole	
	ORB00101			0				2,4,5,7	
5			90%		QUARTZ SAND: Dark brown/black, same as .5 to 5 feet.				
				0				4,7,9,10	
			90%						
				0				8,12,15,18	
			95%						
10				0				3,10,14,18	
			95%						
				0				10,12,15,25	
			95%						
15									

 ABB ENVIRONMENTAL SERVICES, INC.

Project: BRAC NTC, Orlando, Background Sampling Program		**Well ID:** OLD-OR-02	**Boring ID:** OLD-OR-02
Client: SOUTHNAVFACENGCOM	**Contractor:** Groundwater Protection, Inc.		**Job No.:** CTO-107
Horizontal coordinate:		**Date started:** 10/25/94	**Compltd:** 10/25/94
Method: 8.25" Hollow stem auger	**Casing dia.:** 2 in.	**Screened int.:** 3-13 ft. bls	**Protection level:** D
TOC elev.: Ft.	**Type of OVM.:** Porta FID	**Total dpth:** 14.0Ft.	**Dpth to ∇** 6.0* Ft.
ABB Rep.: S. Grietens	**Well development date:** 10/31/94		**Site:** Background

Depth Ft.	Laboratory Sample ID.	Sample	Recovery	Headspace (ppm)	Soil/Rock Description and comments	Lithologic symbol	Soil class.	Blows/6-in.	Well diag.
				0	QUARTZ SAND: Dark brown/gray, fine grained, good sorting, good/ moderate rounding, with trace silts.		SP	posthole	
				0				posthole	
				0				posthole	
5									
	ORB00201			0	QUARTZ SAND: Dark brown/black, same as .5 to 6 feet.			posthole	
				0				posthole	
10				0				1,4,5,10	
			95%						
				0				4,7,9,11	
			95%						
15									

 ABB ENVIRONMENTAL SERVICES, INC.

Project: BRAC NTC, Orlando, Background Sampling Program	**Well ID:** OLD-OR-03	**Boring ID:** OLD-OR-03
Client: SOUTHNAVFACENGCOM	**Contractor:** Groundwater Protection, Inc.	**Job No.:** CTO-107
Horizontal coordinate:	**Date started:** 10/25/94	**Compltd:** 10/25/94
Method: 8.25" Hollow stem auger	**Casing dia.:** 2 in.	**Screened int.:** 3-13 ft. bls	**Protection level:** D
TOC elev.: Ft.	**Type of OVM.:** Porta FID	**Total dpth:** 14.0Ft.	**Dpth to ▽** 5.0* Ft.
ABB Rep.: S. Grietens	**Well development date:** 10/31/94	**Site:** Background

Depth Ft.	Laboratory Sample ID.	Sample	Recovery	Headspace (ppm)	Soil/Rock Description and comments	Lithologic symbol	Soil class.	Blows/6-in.	Well diag.
				0	QUARTZ SAND: Brown, fine grained, good sorting, good/ moderate rounding, with trace silts.		SP	posthole	
				0				posthole	
					QUARTZ SAND: Light brown/tan, same as .5 to 3 feet.				
	ORB00301			0				1,1,1,2	
5			95%		QUARTZ SAND: Red/brown black, same as .5 to 3 feet.				
				0				3,5,6,5	
			75%						
				0				5,6,9,9	
			100%						
10				0				2,3,10,13	
			95%						
				0				4,13,24,22	
			95%						
15									

 ABB ENVIRONMENTAL SERVICES, INC.

Project: BRAC NTC, Orlando, Background Sampling Program	**Well ID:** OLD-OR-04	**Boring ID:** OLD-OR-04
Client: SOUTHNAVFACENGCOM	**Contractor:** Groundwater Protection, Inc.	**Job No.:** CTO-107
Horizontal coordinate:	**Date started:** 10/28/94	**Compltd:** 10/28/94
Method: 6.25" Hollow stem auger	**Casing dia.:** 2 in.	**Screened int.:** 3-13 ft. bls	**Protection level:** D
TOC elev.: Ft.	**Type of OVM.:** Porta FID	**Total dpth:** 14.0Ft.	**Dpth to ▽** 7.0* Ft.
ABB Rep.: S. Grietens	**Well development date:** 10/31/94, 11/01/94	**Site:** Background

Depth Ft.	Laboratory Sample ID.	Sample	Recovery	Headspace (ppm)	Soil/Rock Description and comments	Lithologic symbol	Soil class.	Blows/6-in.	Well diag.
				0	QUARTZ SAND: Light tan/brown, fine grained, good sorting, good/ moderate rounding, with trace silts.		SP	posthole	
				0				posthole	
				0				1,3,4,6	
5			60%		QUARTZ SAND: Brown, same as .5 to 5 feet, with trace clays.				
	ORB00401			0				2,2,2,3	
			70%						
				0				1,1,2,3	
			90%						
10				0				1,1,2,2	
			95%						
				0				1,4,7,12	
			95%						
15									

 ABB ENVIRONMENTAL SERVICES, INC.

Project: BRAC NTC, Orlando, Background Sampling Program	**Well ID:** OLD-OR-05	**Boring ID:** OLD-OR-05
Client: SOUTHNAVFACENGCOM	**Contractor:** Groundwater Protection, Inc.	**Job No.:** CTO-107
Horizontal coordinate:	**Date started:** 10/28/94	**Completd:** 10/28/94
Method: 6.25" Hollow stem auger	**Casing dia.:** 2 in.	**Screened int.:** 3-13 ft. bls	**Protection level:** D
TOC elev.: Ft.	**Type of OVM.:** Porta FID	**Total dpth:** 14.0Ft.	**Dpth to ∇:** 4.0* Ft.
ABB Rep.: S. Grietens	**Well development date:** 11/01/94	**Site:** Background

Depth Ft.	Laboratory Sample ID.	Sample	Recovery	Headspace (ppm)	Soil/Rock Description and comments	Lithologic symbol	Soil class.	Blows/6-in.	Well diag.
				0	QUARTZ SAND: Gray/tan/white, fine grained, good sorting, good/ moderate rounding, with trace silts.		SP	posthole	
	ORB00501			0				posthole	
				5				1,4,6,10	
5			75%		QUARTZ SAND: Dark brown, black, same as .5 to 5 feet.				
				0				3,7,8,10	
			95%						
				0				3,4,9,15	
			100%						
10				0				3,4,6,11	
			100%						
				0				4,6,7,8	
			100%						
15									

 ABB ENVIRONMENTAL SERVICES, INC.

Project: BRAC NTC, Orlando, Background Sampling Program	**Well ID:** OLD-OR-06	**Boring ID:** OLD-OR-06
Client: SOUTHNAVFACENGCOM	**Contractor:** Groundwater Protection, Inc.	**Job No.:** CTO-107
Horizontal coordinate:	**Date started:** 10/26/94	**Compltd:** 10/26/94
Method: 8.25" Hollow stem auger	**Casing dia.:** 2 in.	**Screened int.:** 3-13 ft. bls / **Protection level:** D
TOC elev.: Ft.	**Type of OVM.:** Porta FID	**Total dpth:** 14.0Ft. / **Dpth to ∇** 8.0* Ft.
ABB Rep.: S. Grietens	**Well development date:** 11/02/94, 11/03/94	**Site:** Background

Depth Ft.	Laboratory Sample ID.	Sample	Recovery	Headspace (ppm)	Soil/Rock Description and comments	Lithologic symbol	Soil class.	Blows/6-in.	Well diag.
				0	QUARTZ SAND: Gray/tan/brown, fine grained, good sorting, good/ moderate rounding, with trace silts.		SP	posthole	
				0				posthole	
				0				2,5,13,14	
5			100%						
	ORB00601			0				1,4,8,7	
			100%						
				0	QUARTZ SAND: Tan/brown, same as .5 to 8 feet, some clays with slight plasticity.			3,11,12,19	
			90%						
10				0				8,11,11,13	
			95%						
				0				5,7,8,15	
			100%						
15									

 ABB ENVIRONMENTAL SERVICES, INC.

Project: BRAC NTC, Orlando, Background Sampling Program		**Well ID:** OLD-OR-07	**Boring ID:** OLD-OR-07
Client: SOUTHNAVFACENGCOM	**Contractor:** Groundwater Protection, Inc.		**Job No.:** CTO-107
Horizontal coordinate:		**Date started:** 10/27/94	**Completd:** 10/27/94
Method: 8.25" Hollow stem auger	**Casing dia.:** 2 in.	**Screened int.:** 3-13 ft. bls	**Protection level:** D
TOC elev.: Ft.	**Type of OVM.:** Porta FID	**Total dpth:** 14.0Ft.	**Dpth to ∇:** 4.0* Ft.
ABB Rep.: S. Grietens	**Well development date:** 11/02/94		**Site:** Background

Depth Ft.	Laboratory Sample ID.	Sample	Recovery	Headspace (ppm)	Soil/Rock Description and comments	Lithologic symbol	Soil class.	Blows/6-in.	Well diag.
				0	QUARTZ SAND: Gray/black, fine grained, good sorting, good/moderate rounding, with trace silts and trace organics.		SP	posthole	
	ORB00701			0				posthole	
				0	QUARTZ SAND: Light brown/dark brown, same as .5 to 4 feet.			1,2,2,2	
5			80%						
				0				1,1,3,3	
			95%						
				0				12"/0 3,5	
			90%						
10				0				1,2,1,3	
			80%						
				0				7,8,8,8	
			95%						
15									

 ABB ENVIRONMENTAL SERVICES, INC.

Project: BRAC NTC, Orlando, Background Sampling Program	**Well ID:** OLD-OR-08	**Boring ID:** OLD-OR-08
Client: SOUTHNAVFACENGCOM	**Contractor:** Groundwater Protection, Inc.	**Job No.:** CTO-107
Horizontal coordinate:	**Date started:** 10/27/94	**Compltd:** 10/27/94
Method: 8.25" Hollow stem auger	**Casing dia.:** 2 in.	**Screened int.:** 3-13 ft. bls	**Protection level:** D
TOC elev.: Ft.	**Type of OVM.:** Porta FID	**Total dpth:** 14.0Ft.	**Dpth to ▽** 3.0/u Ft.
ABB Rep.: S. Grietens	**Well development date:** 11/01/94, 11/02/94	**Site:** Background

Depth Ft.	Laboratory Sample ID.	Sample	Recovery	Headspace (ppm)	Soil/Rock Description and comments	Lithologic symbol	Soil class.	Blows/6-in.	Well diag.
				0	QUARTZ SAND: Tan/brown, fine grained, good sorting, good/moderate rounding, with trace silts.		SP	posthole	
				0				posthole	
	ORB00801		95%	0	QUARTZ SAND: Brown/black, same as .5 to 4 feet.			2,2,3,4	
5			100%	0				2,2,3,7	
			95%	0				8,12,18,20	
10			90%	0				5,12,18,18	
			95%	0				10,10,9,10	
15									

 ABB ENVIRONMENTAL SERVICES, INC.

Project: BRAC NTC, Orlando, Background Sampling Program	**Well ID:** OLD-OR-09	**Boring ID:** OLD-OR-09
Client: SOUTHNAVFACENGCOM	**Contractor:** Groundwater Protection, Inc.	**Job No.:** CTO-107
Horizontal coordinate:	**Date started:** 10/27/94	**Compltd:** 10/27/94
Method: 8.25" Hollow stem auger	**Casing dia.:** 2 in.	**Screened int.:** 3-13 ft. bls	**Protection level:** D
TOC elev.: Ft.	**Type of OVM.:** Porta FID	**Total dpth:** 14.0Ft.	**Dpth to ▽** 3.0* Ft.
ABB Rep.: S. Grietens	**Well development date:** 11/02/94	**Site:** Background

Depth Ft.	Laboratory Sample ID.	Sample	Recovery	Headspace (ppm)	Soil/Rock Description and comments	Lithologic symbol	Soil class.	Blows/6-in.	Well diag.
				0	QUARTZ SAND: Black, fine grained, good sorting, good/moderate rounding, with trace silts and trace organics.		SP	posthole	
	ORB00901			0	QUARTZ SAND: Tan/brown/dark brown, same as .5 to 2.0 feet.			posthole	
				0				1,1,3,5	
5			95%						
				0				5,4,3,3	
			95%						
				0				3,3,4,5	
			90%						
10				0				3,4,5,5	
			100%						
				0				2,3,5,5	
			100%						
15									

 ABB ENVIRONMENTAL SERVICES, INC.

Project: BRAC NTC, Orlando, Background Sampling Program		**Well ID:** OLD-OR-10	**Boring ID:** OLD-OR-10
Client: SOUTHNAVFACENGCOM	**Contractor:** Groundwater Protection, Inc.		**Job No.:** CTO-107
Horizontal coordinate:		**Date started:** 10/28/94	**Compltd:** 10/28/94
Method: 8.25" Hollow stem auger	**Casing dia.:** 2 in.	**Screened int.:** 4-14 ft. bls	**Protection level:** D
TOC elev.: Ft.	**Type of OVM.:** Porta FID	**Total dpth:** 15.0Ft.	**Dpth to ▽** 8.5* Ft.
ABB Rep.: G. Garadot	**Well development date:** 11/03/94		**Site:** Background

Depth Ft.	Laboratory Sample ID.	Sample	Recovery	Headspace (ppm)	Soil/Rock Description and comments	Lithologic symbol	Soil class.	Blows/6-in.	Well diag.
				0	QUARTZ SAND: Brown, fine grained, good sorting, good/moderate rounding, with trace silts and trace organics.		SP	posthole	
				0	QUARTZ SAND: Brown/gray, same as .5 to 2.0 feet.			posthole	
	ORB01001			0				2,3,4	
5			100%						
				0				4,4,7	
			100%						
				0				3,6,7	
			100%						
10				0	QUARTZ SAND: Light brown/white, same as .5 to 2.0 feet.			3,8,9	
			100%						
				0				4,7,8	
			100%						
15									

 ABB ENVIRONMENTAL SERVICES, INC.

APPENDIX B

MONITORING WELL CONSTRUCTION DIAGRAMS

DEPARTMENT OF THE NAVY

SOUTHERN DIVISION
NAVAL FACILITIES ENGINEERING COMMAND
CHARLESTON, SC

WELL CONSTRUCTION DETAIL

WELL NUMBER: OLD-OR-01

DATE OF INSTALLATION: 10/25/94

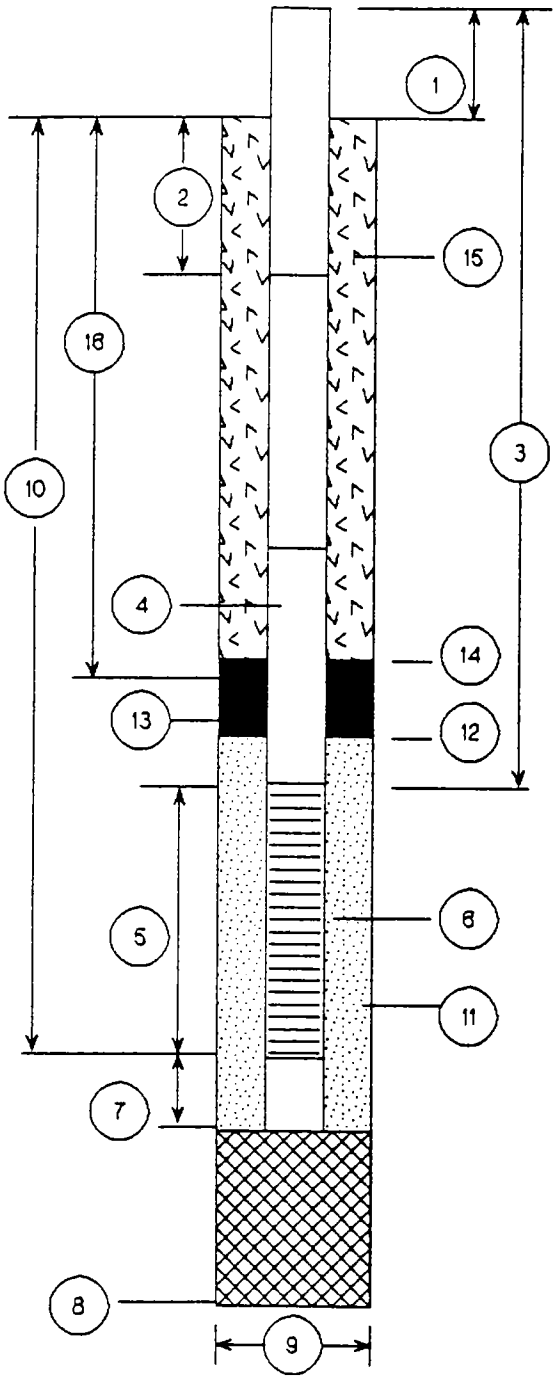

1. Height of Casing above ground: 0 (flush)
2. Depth to first Coupling: 3'

   Coupling Interval Depths: NA
3. Total Length of Riser Pipe: 3'
4. Type of Riser Pipe: 2-inch I.D. Schedule 40 PVC
5. Length of Screen: 10'
6. Type of Screen: 0.010-inch slot PVC
7. Length of Sump: NA
8. Total Depth of Boring: 14'
9. Diameter of Boring: 6.25"
10. Depth to Bottom of Screen: 13'
11. Type of Screen Filter: Silica Sand

    Quantity Used: 8 bags Size: 20/30
12. Depth to Top of Filter: 2'
13. Type of Seal: Bentonite

    Quantity Used: 20 lbs.
14. Depth to Top of Seal: 1.5'
15. Type of Grout: Neat

    Grout Mixture: 95% Portland, 5% Bentonite

    Method of Placement: Poured
16. Tot. Depth of 6 in. Steel Casing: NA

COMMENTS ON INSTALLATION

ABB ENVIRONMENTAL, INC.

DEPARTMENT OF THE NAVY

SOUTHERN DIVISION
NAVAL FACILITIES ENGINEERING COMMAND
CHARLESTON, SC

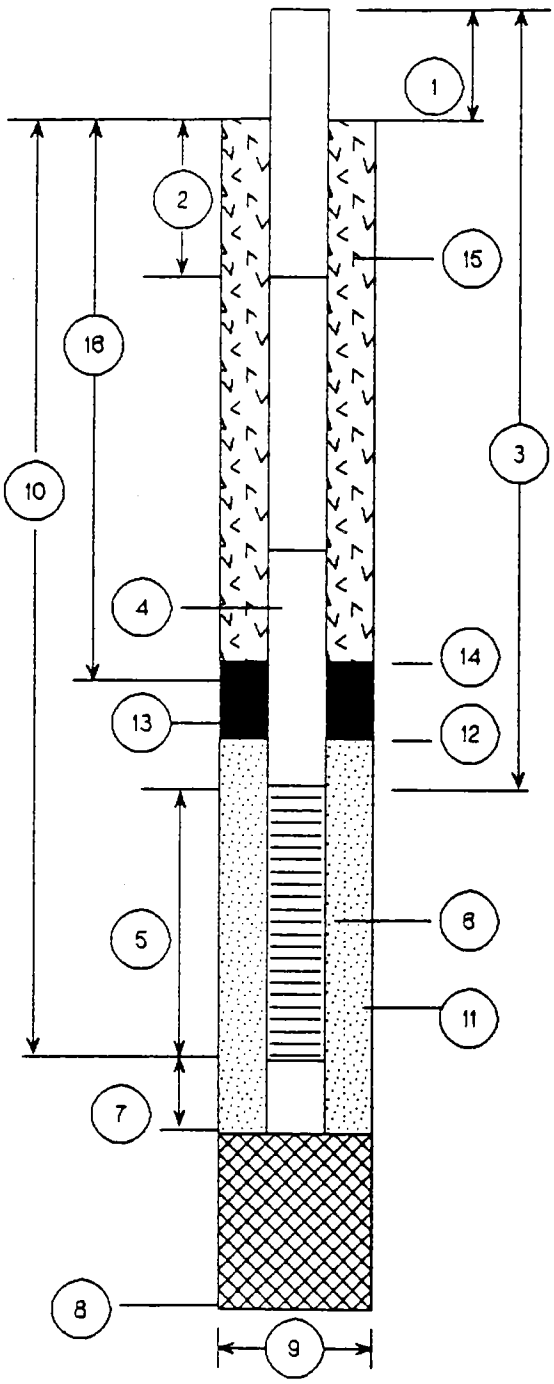

WELL CONSTRUCTION DETAIL

WELL NUMBER: OLD-OR-02

DATE OF INSTALLATION: 10/25/94

1. Height of Casing above ground: 0 (flush)
2. Depth to first Coupling: 3'
   Coupling Interval Depths: NA
3. Total Length of Riser Pipe: 3'
4. Type of Riser Pipe: 2-inch I.D. Schedule 40 PVC
5. Length of Screen: 10'
6. Type of Screen: 0.010-inch slot PVC
7. Length of Sump: NA
8. Total Depth of Boring: 14'
9. Diameter of Boring: 6.25"
10. Depth to Bottom of Screen: 13'
11. Type of Screen Filter: Silica Sand
    Quantity Used: 10 bags Size: 20/30
12. Depth to Top of Filter: 2'
13. Type of Seal: Bentonite
    Quantity Used: 20 lbs
14. Depth to Top of Seal: 1.5'
15. Type of Grout: Neat
    Grout Mixture: 95% Portland, 5% Bentonite
    Method of Placement: Poured
16. Tot. Depth of 6 in. Steel Casing: NA

COMMENTS ON INSTALLATION

ABB ENVIRONMENTAL, INC.

DEPARTMENT OF THE NAVY

SOUTHERN DIVISION
NAVAL FACILITIES ENGINEERING COMMAND
CHARLESTON, SC

WELL CONSTRUCTION DETAIL

WELL NUMBER: OLD-OR-03

DATE OF INSTALLATION: 10/25/94

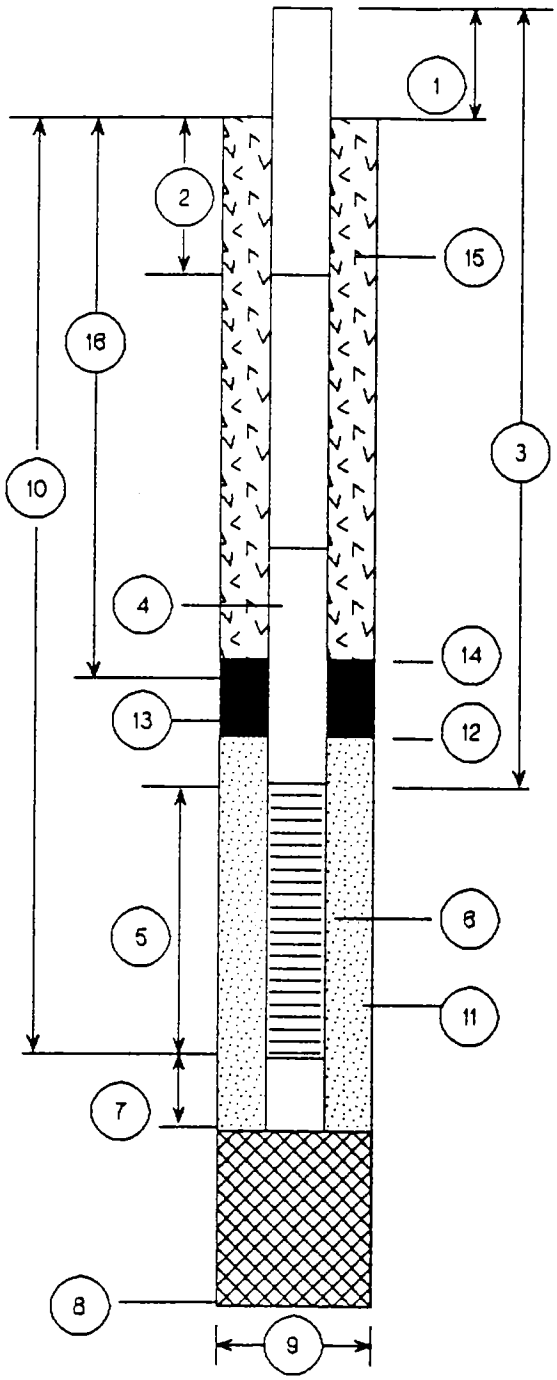

1. Height of Casing above ground: 0 (flush)
2. Depth to first Coupling: 3'
   Coupling Interval Depths: NA
3. Total Length of Riser Pipe: 3'
4. Type of Riser Pipe: 2-inch I.D. Schedule 40 PVC
5. Length of Screen: 10'
6. Type of Screen: 0.010-inch slot PVC
7. Length of Sump: NA
8. Total Depth of Boring: 14'
9. Diameter of Boring: 6.25"
10. Depth to Bottom of Screen: 13'
11. Type of Screen Filter: Silica Sand
    Quantity Used: 5.5 bags Size: 20/30
12. Depth to Top of Filter: 2'
13. Type of Seal: Bentonite
    Quantity Used: 20 lbs
14. Depth to Top of Seal: 1.5'
15. Type of Grout: Neat
    Grout Mixture: 95% Portland, 5% Bentonite
    Method of Placement: Poured
16. Tot. Depth of 8 in. Steel Casing: NA

COMMENTS ON INSTALLATION

ABB ENVIRONMENTAL, INC.

DEPARTMENT OF THE NAVY

SOUTHERN DIVISION
NAVAL FACILITIES ENGINEERING COMMAND
CHARLESTON, SC

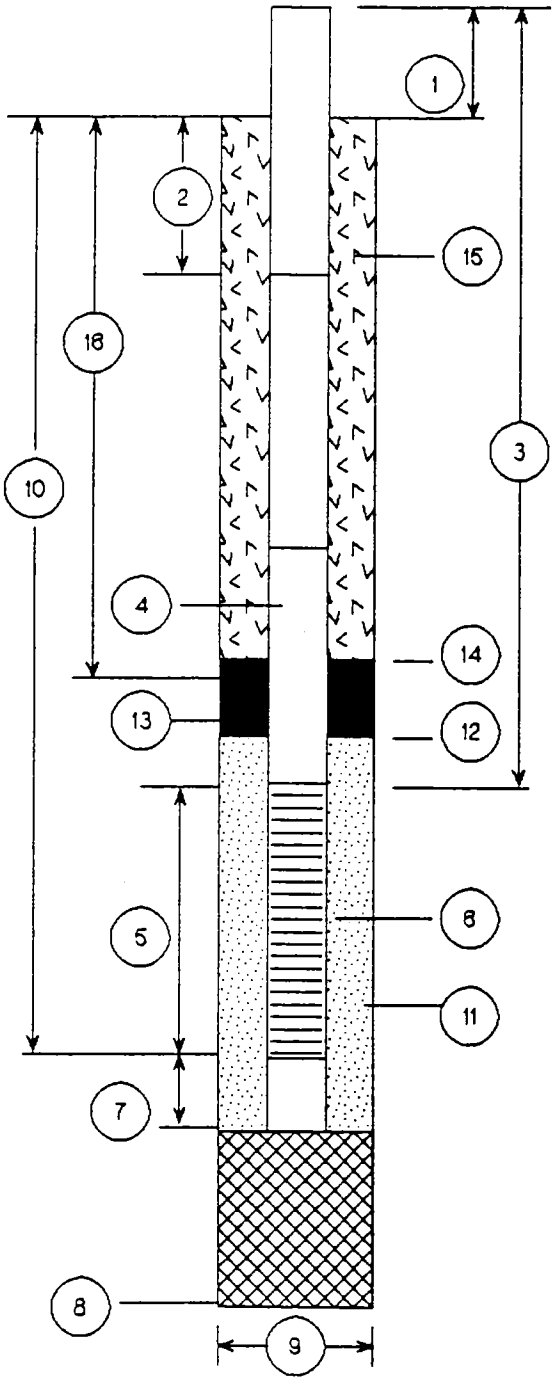

WELL CONSTRUCTION DETAIL

WELL NUMBER: OLD-OR-04

DATE OF INSTALLATION: 10/26/94

1. Height of Casing above ground: 0(flush)
2. Depth to first Coupling: 3'
   Coupling Interval Depths: NA
3. Total Length of Riser Pipe: 3'
4. Type of Riser Pipe: 2-inch I.D. Schedule 40 PVC
5. Length of Screen: 10'
6. Type of Screen: 0.010-inch slot PVC
7. Length of Sump: NA
8. Total Depth of Boring: 14'
9. Diameter of Boring: 6.25"
10. Depth to Bottom of Screen: 13'
11. Type of Screen Filter: Silica Sand
    Quantity Used: 8 bags Size: 20/30
12. Depth to Top of Filter: 2'
13. Type of Seal: Bentonite
    Quantity Used: 20 lb.s
14. Depth to Top of Seal: 1.5'
15. Type of Grout: Neat
    Grout Mixture: 95% Portland, 5% Bentonite
    Method of Placement: Poured
16. Tot. Depth of 8 in. Steel Casing: NA

COMMENTS ON INSTALLATION

ABB ENVIRONMENTAL, INC.

DEPARTMENT OF THE NAVY

SOUTHERN DIVISION
NAVAL FACILITIES ENGINEERING COMMAND
CHARLESTON, SC

WELL CONSTRUCTION DETAIL

WELL NUMBER: OLD-OR-05

DATE OF INSTALLATION: 10/26/94

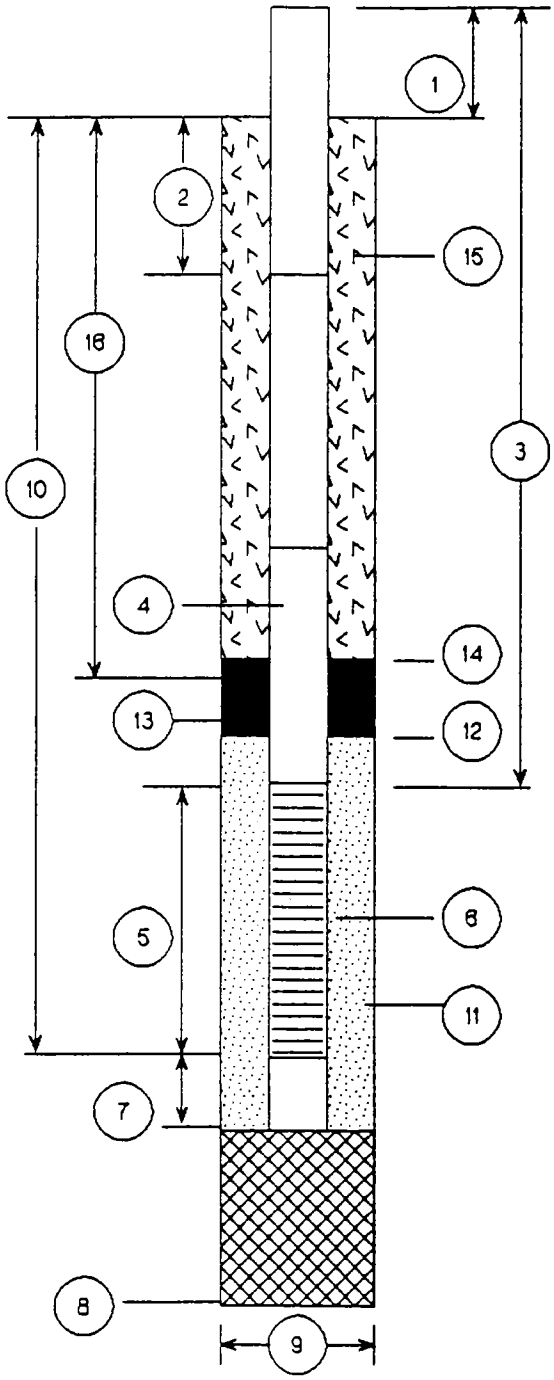

1. Height of Casing above ground: 0 (flush)
2. Depth to first Coupling: 3'
   Coupling Interval Depths: NA
3. Total Length of Riser Pipe: 3'
4. Type of Riser Pipe: 2-inch I.D. Schedule 40 PVC
5. Length of Screen: 10'
6. Type of Screen: 0.010-inch slot PVC
7. Length of Sump: NA
8. Total Depth of Boring: 14'
9. Diameter of Boring: 6.25"
10. Depth to Bottom of Screen: 13'
11. Type of Screen Filter: Silica Sand
    Quantity Used: 7 bags Size: 20/30
12. Depth to Top of Filter: 2'
13. Type of Seal: Bentonite
    Quantity Used: 20 lb.s
14. Depth to Top of Seal: 1.5'
15. Type of Grout: Neat
    Grout Mixture: 95% Portland, 5% Bentonite
    Method of Placement: Poured
16. Tot. Depth of 8 in. Steel Casing: NA

COMMENTS ON INSTALLATION

ABB ENVIRONMENTAL, INC.

DEPARTMENT OF THE NAVY

SOUTHERN DIVISION
NAVAL FACILITIES ENGINEERING COMMAND
CHARLESTON, SC

WELL CONSTRUCTION DETAIL

WELL NUMBER: OLD-OR-06

DATE OF INSTALLATION: 10/27/94

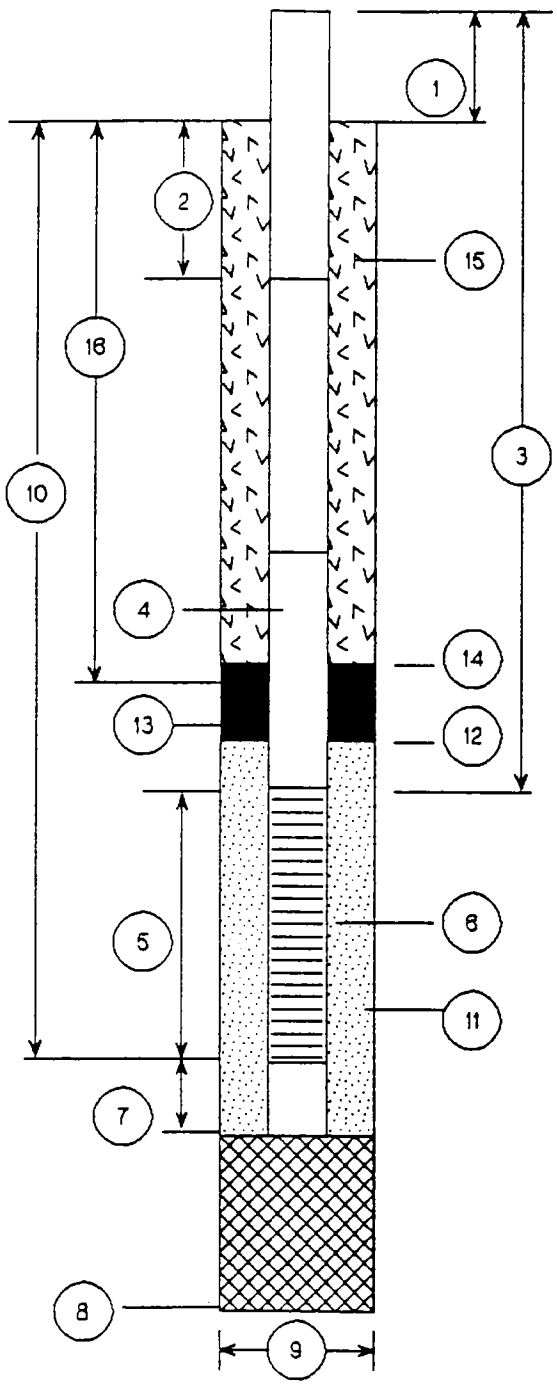

1. Height of Casing above ground: 0 (flush)
2. Depth to first Coupling: 3'
   Coupling Interval Depths: NA
3. Total Length of Riser Pipe: 3'
4. Type of Riser Pipe: 2-inch I.D. Schedule 40 PVC
5. Length of Screen: 10'
6. Type of Screen: 0.010-inch slot PVC
7. Length of Sump: NA
8. Total Depth of Boring: 14'
9. Diameter of Boring: 6.25"
10. Depth to Bottom of Screen: 13'
11. Type of Screen Filter: Silica Sand
    Quantity Used: 11 bags Size: 20/30
12. Depth to Top of Filter: 2'
13. Type of Seal: Bentonite
    Quantity Used: 20 lbs
14. Depth to Top of Seal: 1.5'
15. Type of Grout: Neat
    Grout Mixture: 95% Portland, 5% Bentonite
    Method of Placement: poured
16. Tot. Depth of 8 in. Steel Casing: NA

COMMENTS ON INSTALLATION

ABB ENVIRONMENTAL, INC.

DEPARTMENT OF THE NAVY

SOUTHERN DIVISION
NAVAL FACILITIES ENGINEERING COMMAND
CHARLESTON, SC

WELL CONSTRUCTION DETAIL

WELL NUMBER: OLD-OR-07

DATE OF INSTALLATION: 10/27/94

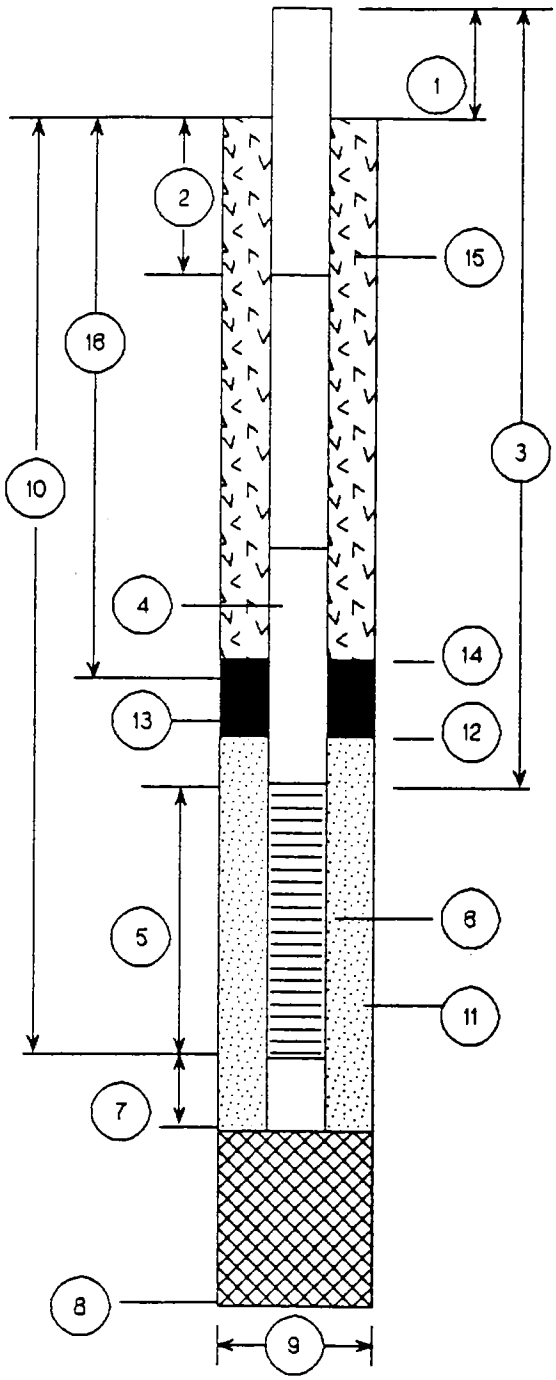

1. Height of Casing above ground: 0 (flush)
2. Depth to first Coupling: 3'
   Coupling Interval Depths: NA
3. Total Length of Riser Pipe: 3'
4. Type of Riser Pipe: 2-inch I.D. Schedule 40 PVC
5. Length of Screen: 10'
6. Type of Screen: 0.010-inch slot PVC
7. Length of Sump: NA
8. Total Depth of Boring: 14'
9. Diameter of Boring: 6.25"
10. Depth to Bottom of Screen: 13'
11. Type of Screen Filter: Silica Sand
    Quantity Used: 8 bags Size: 20/30
12. Depth to Top of Filter: 2'
13. Type of Seal: Bentonite
    Quantity Used: 20 lbs
14. Depth to Top of Seal: 1.5'
15. Type of Grout: Neat
    Grout Mixture: 95% Portland, 5% Bentonite
    Method of Placement: Poured
16. Tot. Depth of 6 in. Steel Casing: NA

COMMENTS ON INSTALLATION

ABB ENVIRONMENTAL, INC.

DEPARTMENT OF THE NAVY

SOUTHERN DIVISION
NAVAL FACILITIES ENGINEERING COMMAND
CHARLESTON, SC

WELL CONSTRUCTION DETAIL

WELL NUMBER: OLD-OR-08

DATE OF INSTALLATION: 10/27/94

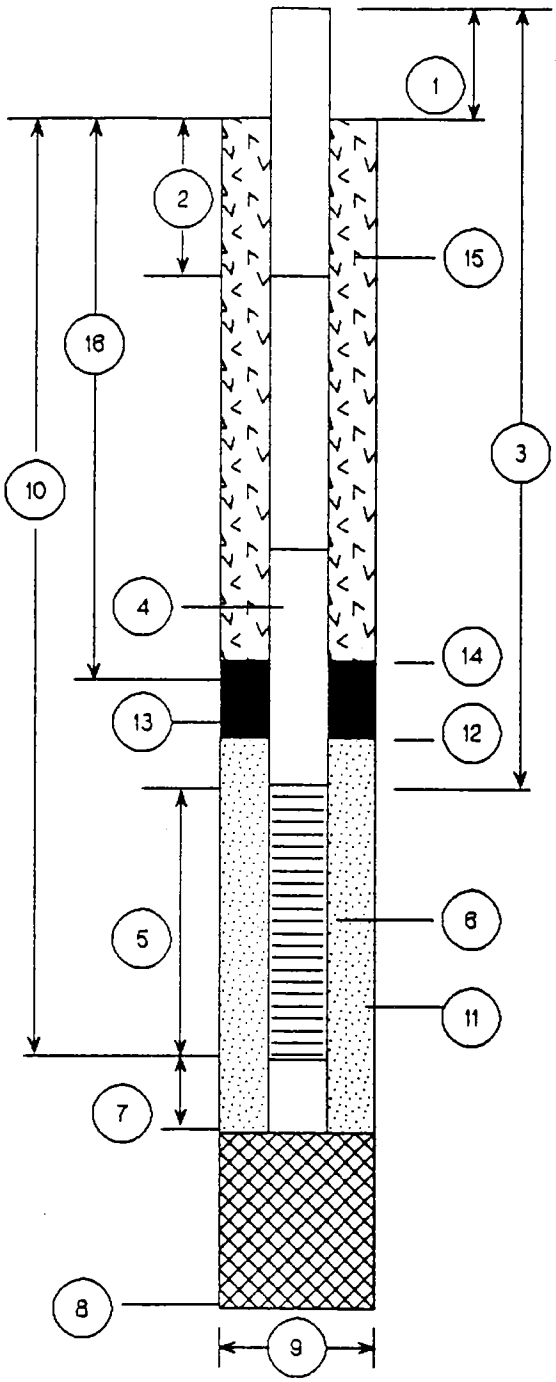

1. Height of Casing above ground: 0 (flush)
2. Depth to first Coupling: 3'
   Coupling Interval Depths: NA
3. Total Length of Riser Pipe: 3'
4. Type of Riser Pipe: 2-inch I.D. Schedule 40 PVC
5. Length of Screen: 10'
6. Type of Screen: 0.010-inch slot PVC
7. Length of Sump: NA
8. Total Depth of Boring: 14'
9. Diameter of Boring: 6.25"
10. Depth to Bottom of Screen: 13'
11. Type of Screen Filter: Silica Sand
    Quantity Used: 7 bags Size: 20/30
12. Depth to Top of Filter: 2'
13. Type of Seal: Bentonite
    Quantity Used: 20 lbs
14. Depth to Top of Seal: 1.5'
15. Type of Grout: Neat
    Grout Mixture: 95% Portland, 5% Bentonite
    Method of Placement: Poured
16. Tot. Depth of 8 in. Steel Casing: NA

COMMENTS ON INSTALLATION

ABB ENVIRONMENTAL, INC.

DEPARTMENT OF THE NAVY

SOUTHERN DIVISION
NAVAL FACILITIES ENGINEERING COMMAND
CHARLESTON, SC

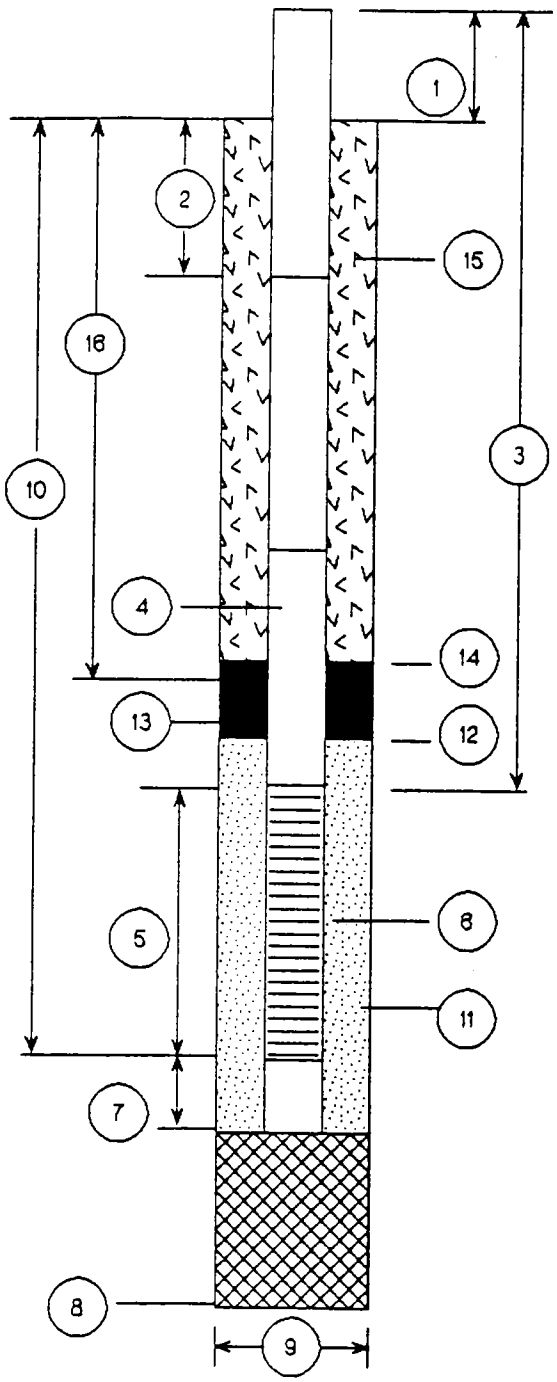

WELL CONSTRUCTION DETAIL

WELL NUMBER: OLD-OR-09

DATE OF INSTALLATION: 10/27/94

1. Height of Casing above ground: 0 (flush)
2. Depth to first Coupling: 3'
   Coupling Interval Depths: NA
3. Total Length of Riser Pipe: 3'
4. Type of Riser Pipe: 2-inch I.D. Schedule 40 PVC
5. Length of Screen: 10'
6. Type of Screen: 0.010-inch slot PVC
7. Length of Sump: NA
8. Total Depth of Boring: 14'
9. Diameter of Boring: 6.25"
10. Depth to Bottom of Screen: 13'
11. Type of Screen Filter: Silica Sand
    Quantity Used: 7 bags Size: 20/30
12. Depth to Top of Filter: 2'
13. Type of Seal: Bentonite
    Quantity Used: 20 lbs
14. Depth to Top of Seal: 1.5'
15. Type of Grout: Neat
    Grout Mixture: 95% Portland, 5% Bentonite
    Method of Placement: Poured
16. Tot. Depth of 6 in. Steel Casing: NA

COMMENTS ON INSTALLATION

ABB ENVIRONMENTAL, INC.

DEPARTMENT OF THE NAVY

SOUTHERN DIVISION
NAVAL FACILITIES ENGINEERING COMMAND
CHARLESTON, SC

WELL CONSTRUCTION DETAIL

WELL NUMBER: OLD-OR-10

DATE OF INSTALLATION: 10/28/94

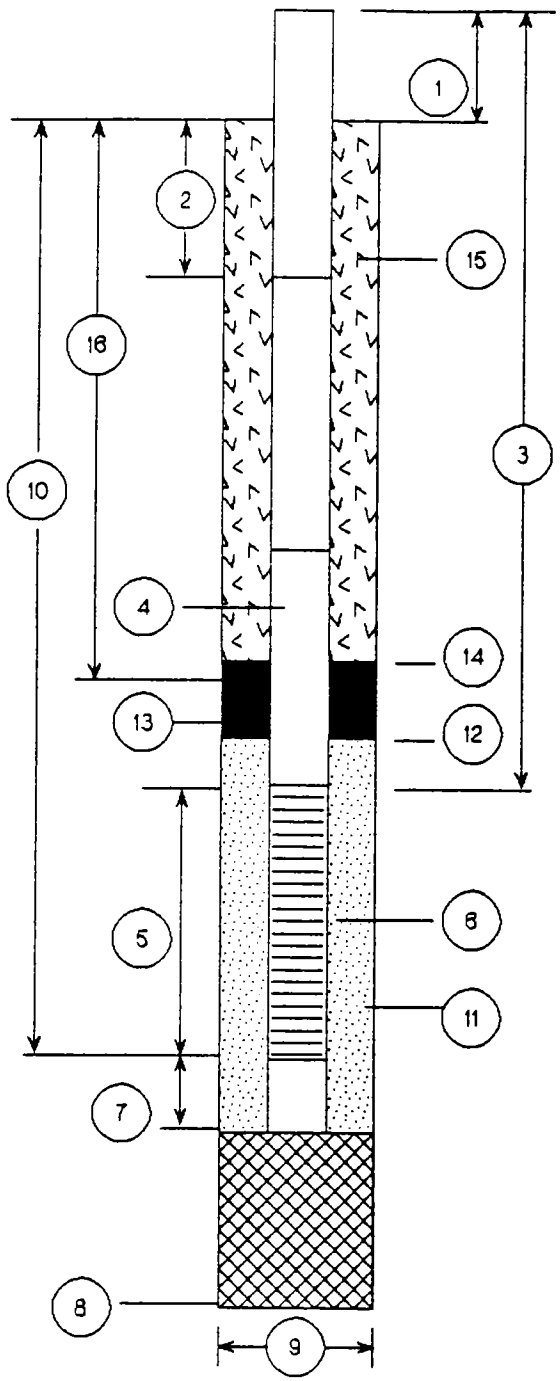

1. Height of Casing above ground: 0 (flush)
2. Depth to first Coupling: 4'
   Coupling Interval Depths: NA
3. Total Length of Riser Pipe: 4'
4. Type of Riser Pipe: 2-inch I.D. Schedule 40 PVC
5. Length of Screen: 10'
6. Type of Screen: 0.010-inch slot PVC
7. Length of Sump: NA
8. Total Depth of Boring: 15'
9. Diameter of Boring: 6.25"
10. Depth to Bottom of Screen: 14'
11. Type of Screen Filter: Silica Sand
    Quantity Used: 9 bags Size: 20/30
12. Depth to Top of Filter: 3'
13. Type of Seal: Bentonite
    Quantity Used: 50 lb.s
14. Depth to Top of Seal: 2'
15. Type of Grout: Neat
    Grout Mixture: 95% Portland, 5% Bentonite
    Method of Placement: Poured
16. Tot. Depth of 8 in. Steel Casing: NA

COMMENTS ON INSTALLATION

ABB ENVIRONMENTAL, INC.

APPENDIX C

WELL DEVELOPMENT RECORDS

WELL DEVELOPMENT RECORD

Project: BACKGROUND HTC ORLANDO	Well Installation Date and Time: 10/25/94		Project No. CTO 107
Client: SOUTH DIVNAV FAC ENG COM	Well Development Date and Time: 10/30/94 12:00	Logged by: GIRARDOT	Checked by: G.B.G.
Well/Site I.D.: OLD-OR-01	Weather: ≈ 80°F, HUMID, WINDY, CLOUDY	Start Date: 10/30/94	Finish Date: 10/30/94
Volume of Drilling Fluid Lost (gal.) N/A	Volume of Water in Well and Filter Pack (gal.) 5.0	Start Time: 12:00	Finish Time: 16:30

Installed Depth From Top of Well Casing to Bottom of Well: 13.00'

Initial Depth to Water (ft): 3.63	Initial Depth to Well Bottom: 12.81

Water Level during Initial Pumping/Purging (ft): 12.00

Depth to Water at Termination of Pumping/Purging (ft): NOT TAKEN	Depth to Well Bottom at Termination of Pumping/Purging (ft): 12.81

	TIME	F° TEMP.	pH	Conductivity	Approximate Pumping Rate (gal/min)
BEGINNING OF WELL DEVELOPMENT	12:00	—	—	—	2.
	15:40	81.4	5.77	105.6	1.
	15:55	75.0	5.65	124.9	1.
	16:05	75.4	5.50	126.5	1.
	16:20	76.5	5.53	150.6	1.
END OF WELL DEVELOPMENT	16:30			165.3	1.

NOTES: (Include physical character of removed water, type & size of pump, volume of water removed.)

PUMPED 210. gallons TOTAL. USED PERISTALTIC PUMP. ORGANIC ODOR.

WELL DEVELOPMENT RECORD	SOUTHERN DIVISION NAVAL FACILITIES ENGINEERING COMMAND	PROJECT OPERATIONS PLAN NAVAL TRAINING CENTER ORLANDO, FLORIDA

WELL DEVELOPMENT RECORD

Project: BACKGROUND NTC ORLANDO	Well Installation Date and Time: 10/25/94		Project No. CTO 107
Client: SOUTH DIV NAVFAC EHG COM	Well Development Date and Time: 10/31/94 0945	Logged by: GIRARDOT	Checked by: GBG
Well/Site I.D.: OLD-OR-02	Weather: ≈ 80° WINDY CLOUDY	Start Date: 10/31/94	Finish Date: 10/31/94
Volume of Drilling Fluid Lost (gal.) N/A	Volume of Water in Well and Filter Pack (gal.) 3.0	Start Time: 09:45	Finish Time: 11:30

Installed Depth From Top of Well Casing to Bottom of Well: 13.00

Initial Depth to Water (ft): 7.33	Initial Depth to Well Bottom: 12.80

Water Level during Initial Pumping/Purging (ft): 8.33

Depth to Water at Termination of Pumping/Purging (ft): NOT TAKEN	Depth to Well Bottom at Termination of Pumping/Purging (ft): NOT TAKEN

	TIME	TEMP.	pH	Conductivity	Approximate Pumping Rate (gal/min)
BEGINNING OF WELL DEVELOPMENT	09:45	84.5	6.0	75.4	1.
	10:00	80.8	5.9	79.0	1.
	10:10	81.3	5.8	79.5	1.
	10:20	81.3	5.6	139.4	1.
	11:10	82.3	5.7	156.8	1.
	11:20	82.0		158.6	1.
END OF WELL DEVELOPMENT	11:30				

NOTES: (Include physical character of removed water, type & size of pump, volume of water removed.)

USED PORA STALTIC PUMP. PUMPED ≈ 105 gallons.

WELL DEVELOPMENT RECORD	PROJECT OPERATIONS PLAN NAVAL TRAINING CENTER ORLANDO, FLORIDA

WELL DEVELOPMENT RECORD

Project: BACK GROUND HTC ORLAHDO	Well Installation Date and Time: 10/25/94		Project No. CTO 107
Client: SOUTH DIVNAVFACENGCOM	Well Development Date and Time: 10/31/94	Logged by: GIRARDOT	Checked by: GBG
Well/Site I.D.: OLD-012-03	Weather: HOT, SUNNY WITH BREEZE	Start Date: 10/31/94	Finish Date: 10/31/94
Volume of Drilling Fluid Lost (gal.) N/A	Volume of Water in Well and Filter Pack (gal.) 4.2	Start Time: 13:10	Finish Time: 16:45

Installed Depth From Top of Well Casing to Bottom of Well: 13.00

Initial Depth to Water (ft): 4.11	Initial Depth to Well Bottom: 11.8

Water Level during Initial Pumping/Purging (ft): 7.3

Depth to Water at Termination of Pumping/Purging (ft): NOT TAKEN	Depth to Well Bottom at Termination of Pumping/Purging (ft): 11.80

	TIME	TEMP.	pH	Conductivity	Approximate Pumping Rate (gal/min)
BEGINNING OF WELL DEVELOPMENT	13:10	—	—	—	1.
	13:25	82.1	4.8	80.5	1.
	13:45	81.5	4.8	56.8	1.
	14:10	81.2	4.8	50.1	1.
	14:30	81.3	—	45.5	1.
	15:40	81.5	4.9	47.0	1.
END OF WELL DEVELOPMENT	16:45				

NOTES: (Include physical character of removed water, type & size of pump, volume of water removed.)

USED PARASTALTIC PUMP. PUMPED ≈ 210 gal.

WELL DEVELOPMENT RECORD

PROJECT OPERATIONS PLAN

NAVAL TRAINING CENTER
ORLANDO, FLORIDA

WELL DEVELOPMENT RECORD

Project: BACKGROUND NTC ORLANDO	Well Installation Date and Time: 11/26/94		Project No. CTO107
Client: SOUTHDIVNAVFACENG.COM	Well Development Date and Time: 10/31/94	Logged by: GIRARDOT	Checked by: GBG
Well/Site I.D.: OLD-OR-04	Weather: NOT RECORDED	Start Date: 10/31/94	Finish Date: 11/1/94
Volume of Drilling Fluid Lost (gal.) N/A	Volume of Water in Well and Filter Pack (gal.) 3.4	Start Time: 17:24/8:20	Finish Time: 8:20/10:00

Installed Depth From Top of Well Casing to Bottom of Well: 13.00

Initial Depth to Water (ft): 6.62	Initial Depth to Well Bottom: 12.85

Water Level during Initial Pumping/Purging (ft): 8.

Depth to Water at Termination of Pumping/Purging (ft): NOT TAKEN	Depth to Well Bottom at Termination of Pumping/Purging (ft): 12.85

	TIME	TEMP.	pH	Conductivity	Approximate Pumping Rate (gal/min)
BEGINNING OF WELL DEVELOPMENT	08:20	78.5	5.9	185.3	1/2
	08:50	78.8	5.7	141.2	1/2
	09:15	79.7	5.6	106.8	1/2
	09:40	79.7	5.6	117.2	1/2
	09:50	STABLE	STABLE	162.8	1/2
END OF WELL DEVELOPMENT	10:00	STABLE	STABLE	143.5	1/2

NOTES: (Include physical character of removed water, type & size of pump, volume of water removed.)

WELL WAS PUMPED ON 10/31/94 WITH HONDA PUMP FOR ≈ 60 MINUTES @ 1gpm. NO READINGS. WELL WAS PUMPED WITH PERISTALTIC ON 11/1/94 AND READINGS WERE RECORDED. TOTAL VOLUME PUMPED FOR BOTH DAYS = 110 g.

WELL DEVELOPMENT RECORD	SOUTHERN DIVISION NAVAL FACILITIES ENGINEERING COMMAND	PROJECT OPERATIONS PLAN NAVAL TRAINING CENTER ORLANDO, FLORIDA

WELL DEVELOPMENT RECORD

Project: BACK GROUND NTC ORLANDO	Well Installation Date and Time: 10/26/94		Project No. CTO107
Client: SOUTHDIVNAVFACENGCOM	Well Development Date and Time: 11/1/94	Logged by: GRARDOT	Checked by: GBG
Well/Site I.D.: OLD-OR-05	Weather: NOT RECORDED	Start Date: 11/1/94	Finish Date: 11/1/94
Volume of Drilling Fluid Lost (gal.)	Volume of Water in Well and Filter Pack (gal.) 5.2	Start Time: 10:50	Finish Time: 15:15

Installed Depth From Top of Well Casing to Bottom of Well: 13.00

Initial Depth to Water (ft): 3.37	Initial Depth to Well Bottom: 12.76

Water Level during Initial Pumping/Purging (ft): 4.45

Depth to Water at Termination of Pumping/Purging (ft): 3.43	Depth to Well Bottom at Termination of Pumping/Purging (ft): 12.76

	TIME	TEMP.	pH	Conductivity	Approximate Pumping Rate (gal/min)
BEGINNING OF WELL DEVELOPMENT	11:40	79.5	3.7	163.5	1/2
	11:50	79.5	3.8	157.5	1/2
	12:00	79.3	NOT RECORDED	305.	1/2
	12:10	79.0	3.7	259.	1/2
	12:30	78.8	3.8	151.3	1/2
END OF WELL DEVELOPMENT	13:10	79.7	3.6	146.6	1/2

NOTES: (Include physical character of removed water, type & size of pump, volume of water removed.)

PUMPED 25g BEFORE READINGS START. USED PARASTALTIC AND HONDA PUMP. HONDA PUMP TO INCREASE DRAWDOWN. RETURNED TO PARASTALTIC. PUMPED TOTAL ≈ 150.g.

WELL DEVELOPMENT RECORD	SOUTHERN DIVISION NAVAL FACILITIES ENGINEERING COMMAND	PROJECT OPERATIONS PLAN NAVAL TRAINING CENTER ORLANDO, FLORIDA

WELL DEVELOPMENT RECORD

Project:	Well Installation Date and Time:		Project No.
Client:	Well Development Date and Time:	Logged by:	Checked by:
Well/Site I.D.: OLD-012-05	Weather:	Start Date:	Finish Date:
Volume of Drilling Fluid Lost (gal.)	Volume of Water in Well and Filter Pack (gal.)	Start Time:	Finish Time:

Installed Depth From Top of Well Casing to Bottom of Well:

Initial Depth to Water (ft):	Initial Depth to Well Bottom:

Water Level during Initial Pumping/Purging (ft):

Depth to Water at Termination of Pumping/Purging (ft):	Depth to Well Bottom at Termination of Pumping/Purging (ft):

	TIME	TEMP.	pH	Conductivity	Approximate Pumping Rate (gal/min)
BEGINNING OF WELL DEVELOPMENT	14:30	80.2	3.8	157.9	1/2
	15:00	79.7	3.7	135.6	1/2
	15:15	79.2	3.8	181.7	1/2
END OF WELL DEVELOPMENT					

NOTES: (Include physical character of removed water, type & size of pump, volume of water removed.)

WELL DEVELOPMENT RECORD

Project: BACKGROUND NTC ORLANDO	Well Installation Date and Time: 10/27/94		Project No. CTO107
Client: SOUTHDIV NAVFACENGCOM	Well Development Date and Time: 11/2/94	Logged by: GHERARDUT	Checked by: GRG
Well/Site I.D.: OLD-OR-06	Weather: NOT RECORDED	Start Date: 11/2/94	Finish Date: 11/3/94
Volume of Drilling Fluid Lost (gal.) N/A	Volume of Water in Well and Filter Pack (gal.)	Start Time: 08:45	Finish Time: 09:30

Installed Depth From Top of Well Casing to Bottom of Well: 13.00

Initial Depth to Water (ft): 6.31	Initial Depth to Well Bottom: 12.54

Water Level during Initial Pumping/Purging (ft): 7.8

Depth to Water at Termination of Pumping/Purging (ft): NOT RECORDED	Depth to Well Bottom at Termination of Pumping/Purging (ft): NOT RECORDED

	TIME	TEMP.	pH	Conductivity	Approximate Pumping Rate (gal/min)
BEGINNING OF WELL DEVELOPMENT	08:45	77.9	4.8	175.2	.2
	09:00	77.7	4.8	97.0	.2
	09:10	77.7	4.8	135.7	.2
	09:20	—	—	131.5	.2
	09:30	—	—	—	—
END OF WELL DEVELOPMENT					

NOTES: (Include physical character of removed water, type & size of pump, volume of water removed.)

PUMPED ≈ 30 g. ON 11/2/94. NO READINGS TAKEN.
PUMPED ≈ 10 g. ON 11/3/94 READING TAKEN.
USED PARASTALTIC PUMP.

WELL DEVELOPMENT RECORD	SOUTHERN DIVISION NAVAL FACILITIES ENGINEERING COMMAND	PROJECT OPERATIONS PLAN NAVAL TRAINING CENTER ORLANDO, FLORIDA

WELL DEVELOPMENT RECORD

Project: BACKGROUND NTC ORLANDO	Well Installation Date and Time: 10/27/94		Project No. CTO 107
Client: SOUTHDIVNAVFACENGCOM	Well Development Date and Time: 11/2/94	Logged by: GIRARDOT	Checked by: GBG
Well/Site I.D.: OLD-OR-07	Weather: NOT RECORDED	Start Date: 11/2/94	Finish Date: 11/2/94
Volume of Drilling Fluid Lost (gal.) N/A	Volume of Water in Well and Filter Pack (gal.) 5.9	Start Time: 14:45	Finish Time: 16:05

Installed Depth From Top of Well Casing to Bottom of Well: 13.00

Initial Depth to Water (ft): 2.13	Initial Depth to Well Bottom: 12.82

Water Level during Initial Pumping/Purging (ft): 3.8

Depth to Water at Termination of Pumping/Purging (ft): NOT RECORDED	Depth to Well Bottom at Termination of Pumping/Purging (ft): NOT RECORDED

	TIME	TEMP.	pH	Conductivity	Approximate Pumping Rate (gal/min)
BEGINNING OF WELL DEVELOPMENT	15:20	78.8	4.6	72.5	5
	15:45	76.6	4.4	62.3	5
	15:55	74.6	4.3	45.0	5
	16:05	76.3	4.4	53.6	5
END OF WELL DEVELOPMENT					

NOTES: (Include physical character of removed water, type & size of pump, volume of water removed.)

PUMPED WITH PARASTALTIC FOR 35 MINUTES, SWITCHED TO HONDA TO INCREASE PUMP RATE. TOTAL PUMPED ≈ 260g.

WELL DEVELOPMENT RECORD		PROJECT OPERATIONS PLAN NAVAL TRAINING CENTER ORLANDO, FLORIDA

WELL DEVELOPMENT RECORD

Project: BACKGROUND NTC ORLANDO	Well Installation Date and Time: 10/27/94		Project No. CTO 107
Client: SOUTHDIV NAVFACENGCOM	Well Development Date and Time: 11/1/94	Logged by: GHIRARDOT	Checked by: GBG
Well/Site I.D.: OLD-OR-08	Weather: HOT RECORDED	Start Date: 11/1/94	Finish Date: 11/2/94
Volume of Drilling Fluid Lost (gal.) N/A	Volume of Water in Well and Filter Pack (gal.) 5.5	Start Time: 08:00	Finish Time: 09:10

Installed Depth From Top of Well Casing to Bottom of Well: 13.00

Initial Depth to Water (ft): 2.75	Initial Depth to Well Bottom: 12.82

Water Level during Initial Pumping/Purging (ft): NOT RECORDED

Depth to Water at Termination of Pumping/Purging (ft): 3.15	Depth to Well Bottom at Termination of Pumping/Purging (ft): 12.82

	TIME	TEMP.	pH	Conductivity	Approximate Pumping Rate (gal/min)
BEGINNING OF WELL DEVELOPMENT	08:00	—	—	—	1.6
	08:15	78.8	5.5	195.1	1.6
	08:25	78.1	5.1	86.9	1.6
	08:40	78.8	4.8	55.6	1.6
	09:00	78.9	4.5	43.5	1.6
END OF WELL DEVELOPMENT	09:10	78.9	4.5	42.8	1.6

NOTES: (Include physical character of removed water, type & size of pump, volume of water removed.)

PUMPED ≈ 30g @ 2.5gpm WITH HONDA PUMP 11/1. COMPLETED WITH PERISTALTIC ON 11/2. TOTAL PUMPED ≈ 142g.

WELL DEVELOPMENT RECORD

PROJECT OPERATIONS PLAN

NAVAL TRAINING CENTER
ORLANDO, FLORIDA

WELL DEVELOPMENT RECORD

Project: BACKGROUND HTC ORLANDO	Well Installation Date and Time: 10/27/94		Project No. CTO 107
Client: SOUTH DIV NAVFACENGCOM	Well Development Date and Time: 11/2/94	Logged by: GIRARDOT	Checked by: GSG
Well/Site I.D.: OLD-OR-09	Weather: NOT RECORDED	Start Date: 11/2/94	Finish Date: 11/2/94
Volume of Drilling Fluid Lost (gal.) N/A	Volume of Water in Well and Filter Pack (gal.) 5.4	Start Time: 09:50	Finish Time: 14:10

Installed Depth From Top of Well Casing to Bottom of Well: 13.00

Initial Depth to Water (ft): 3.00	Initial Depth to Well Bottom: 12.82

Water Level during Initial Pumping/Purging (ft): 7.00

Depth to Water at Termination of Pumping/Purging (ft): NOT RECORDED	Depth to Well Bottom at Termination of Pumping/Purging (ft): 12.82

	TIME	TEMP.	pH	Conductivity	Approximate Pumping Rate (gal/min)
BEGINNING OF WELL DEVELOPMENT	11:00	79.8	5.2	123.9	
	11:30	81.7	5.0	92.8	
	12:00	79.9	5.0	85.4	
	12:45	79.9	5.2	86.7	
	13:45	78.3	5.1	75.5	
END OF WELL DEVELOPMENT	14:10	78.8	—	72.1	

NOTES: (Include physical character of removed water, type & size of pump, volume of water removed.)

PUMPED 15 g. WITH HONDA PUMP FIRST, THEN SWITCHED TO PERISTALTIC. PUMPED TOTAL ~ 110 g.

WELL DEVELOPMENT RECORD	SOUTHERN DIVISION NAVAL FACILITIES ENGINEERING COMMAND	PROJECT OPERATIONS PLAN NAVAL TRAINING CENTER ORLANDO, FLORIDA

WELL DEVELOPMENT RECORD

Project: BACKGROUND NTC ORLANDO	Well Installation Date and Time: 10/28/94		Project No. CTO 107
Client: SOUTHDIVNAVFAC ENG.COM	Well Development Date and Time: 11/3/94	Logged by: GIRARDOT	Checked by: GBG
Well/Site I.D.: OLD-OR-10	Weather: NOT RECORDED	Start Date: 11/3/94	Finish Date: 11/3/94
Volume of Drilling Fluid Lost (gal.)	Volume of Water in Well and Filter Pack (gal.) 5.6	Start Time: 09:45	Finish Time: 13:25

Installed Depth From Top of Well Casing to Bottom of Well: 14.00

Initial Depth to Water (ft): 3.72	Initial Depth to Well Bottom: 13.82

Water Level during Initial Pumping/Purging (ft): NOT RECORDED

Depth to Water at Termination of Pumping/Purging (ft): NOT RECORDED	Depth to Well Bottom at Termination of Pumping/Purging (ft): 13.84

	TIME	TEMP.	pH	Conductivity	Approximate Pumping Rate (gal/min)
BEGINNING OF WELL DEVELOPMENT	13:00	78.7	4.9	81.1	1/2
	13:10	77.4	4.9	72.3	1/2
	13:15	77.9	4.9	105.9	1/2
	13:20	77.4	—	102.9	1/2
END OF WELL DEVELOPMENT					

NOTES: (Include physical character of removed water, type & size of pump, volume of water removed.)

PUMPED 35 g. BEFORE READINGS, PUMPED TOTAL OF 50 g. WITH PERISTALTIC PUMP.

WELL DEVELOPMENT RECORD	SOUTHERN DIVISION NAVAL FACILITIES ENGINEERING COMMAND	PROJECT OPERATIONS PLAN NAVAL TRAINING CENTER ORLANDO, FLORIDA

APPENDIX D

GROUNDWATER SAMPLING LOGS

GROUNDWATER SAMPLING LOGS

WELL: OLD-OR-01
DATE: 11/11/94
FID READING AT WELL HEAD (PPM): 0-4
INITIAL DEPTH TO WATER (FT): 3.83

TIME	VOLUME PUMPED	PUMPING RATE (L/MIN)	pH	TEMP (C)	COND. mMHOS/CM	NTU
1145	2.5	0.5	6.88	27.5	250	>100
1150	5.0	0.5	6.88	27.5	253	>100
1155	7.5	0.5	6.91	27.0	253	CLEARING
1200	10.0	0.5	6.94	27.0	244	TAN COLOR
1205	12.5	0.5	6.89	27.0	246	TAN COLOR
1210	15.0	0.5	6.95	27.0	240	TAN COLOR
1215	17.5	0.5	6.99	27.0	246	TAN COLOR
1220	20.0	0.5	6.92	27.0	242	TAN COLOR

1225 TOOK GROUNDWATER SAMPLE
FINAL DEPTH TO WATER (FT): 3.94

WELL: OLD-OR-02
DATE: 11/10/94
FID READING AT WELL HEAD (PPM):
INITIAL DEPTH TO WATER (FT):

TIME	VOLUME PUMPED	PUMPING RATE (L/MIN)	pH	TEMP (C)	COND. mMHOS/CM	NTU
1420	2.5	0.5	6.88	28.0	308	0.58
1425	5.0	0.5	6.75	28.0	308	0.52
1430	7.5	0.5	6.66	28.0	308	0.45
1435	10.0	0.5	6.59	28.0	308	0.37
1440	12.5	0.5	6.58	28.0	308	0.32

1445 TOOK GROUNDWATER SAMPLE
FINAL DEPTH TO WATER (FT): 7.5

GROUNDWATER SAMPLING LOGS

WELL: OLD-OR-03
DATE: 11/10/94
FID READING AT WELL HEAD (PPM):
INITIAL DEPTH TO WATER (FT): 4.1

TIME	VOLUME PUMPED	PUMPING RATE (L/MIN)	pH	TEMP (F)	COND. mMHOS/CM	NTU
1330	2.5	0.75	6.90	80.2	62	CLEAR
1335	5.0	0.75	6.90	80.2	65	CLEAR
1340	7.5	0.75	6.90	80.3	69	CLEAR
1345	10.0	0.75	6.90	80.4	59	V. CLEAR
1350	12.5	0.75	6.90	80.5	55	V. CLEAR
1400	16.0	0.75	6.90	80.6	52	V. CLEAR

1440 TOOK GROUNDWATER SAMPLE
FINAL DEPTH TO WATER (FT):

WELL: OLD-OR-04
DATE: 11/10/94
FID READING AT WELL HEAD (PPM): 0
INITIAL DEPTH TO WATER (FT): 6.92

TIME	VOLUME PUMPED	PUMPING RATE	pH	TEMP (F)	COND. mMHOS/CM	NTU
745	4.0	0.8	5.80	78.8	219	EXT. CLEAR
755	8.0	0.8	5.90	79.2	159	EXT. CLEAR
805	12.0	0.8	6.00	79.2	223	EXT. CLEAR
810	16.0	0.8	5.70	79.4	217	EXT. CLEAR
815	20.0	0.8	5.70	79.5	215	EXT. CLEAR

905 TOOK GROUNDWATER SAMPLE
FINAL DEPTH TO WATER (FT):

GROUNDWATER SAMPLING LOGS

WELL: OLD-OR-05
DATE: 11/10/94
FID READING AT WELL HEAD (PPM): 0
INITIAL DEPTH TO WATER (FT):

TIME	VOLUME PUMPED	PUMPING RATE	pH	TEMP (F)	COND. mMHOS/CM	NTU
1000	4.0	0.8	3.90	78.8	139	BROWN & TURBID
1005	8.0	0.8	3.90	78.7	144	
1010	12.0	0.8	3.90	78.6	149	
1015	16.0	0.8	3.90	78.9	158	
1030	20.0	0.8	4.00	78.8	157	GRADUALLY CLARIFYING

1045 TOOK GROUNDWATER SAMPLE
FINAL DEPTH TO WATER (FT):

WELL: OLD-OR-06
DATE: 11/09/94
FID READING AT WELL HEAD (PPM):
INITIAL DEPTH TO WATER (FT):

TIME	VOLUME PUMPED	PUMPING RATE	pH	TEMP (F)	COND. mMHOS/CM	NTU
1720	2.5	0.5	6.00	78.8	158	V. CLEAR
1725	5.0	0.5	5.80	78.6	137	V. CLEAR
1735	7.5	0.5	5.50	78.6	127	V. CLEAR
1740	10.0	0.5	5.30	78.2	122	V. CLEAR

1800 TOOK GROUNDWATER SAMPLE
FINAL DEPTH TO WATER (FT):

GROUNDWATER SAMPLING LOGS

WELL: OLD-OR-07
DATE: 11/09/94
FID READING AT WELL HEAD (PPM): 0
INITIAL DEPTH TO WATER (FT): 2.85

TIME	VOLUME PUMPED	PUMPING RATE	pH	TEMP (C)	COND. mMHOS/CM	NTU
1540	2.5	0.5	6.20	27.0	98	VY CLEAR
1545	5.0	0.5	6.03	26.0	89	VY CLEAR
1550	7.5	0.5	6.08	26.0	82	VY CLEAR
1555	10.0	0.5	6.07	26.5	75	VY CLEAR
1600	12.5	0.5	6.04	26.0	68	VY CLEAR
1610	15.0	0.5	6.05	26.0	78	VY CLEAR
1615	17.5	0.5	6.03	26.0	62	0.4
1620	20.0	0.5	6.05	26.0	72	0.4

1730 TOOK GROUNDWATER SAMPLE
FINAL DEPTH TO WATER (FT):

WELL: OLD-OR-08
DATE: 09/09/94
FID READING AT WELL HEAD (PPM):
INITIAL DEPTH TO WATER (FT): 3.4

TIME	VOLUME PUMPED	PUMPING RATE	pH	TEMP (F)	COND. mMHOS/CM	NTU
1420	5.0	0.8	5.80	86.2	314	18.4
1440	20.0	0.8	6.20	86.0	--	17.9
1450	30.0	0.8	6.40	82.5	262	18.4
1500	35.0	0.8	6.20	82.4	250	18.6
1510	40.0	0.8	--	--	--	19
1520	45.0	0.8	--	--	--	18.6

1530 TOOK GROUNDWATER SAMPLE
FINAL DEPTH TO WATER (FT):

GROUNDWATER SAMPLING LOGS

WELL: OLD-OR-09
DATE: 11/10/94
FID READING AT WELL HEAD (PPM):
INITIAL DEPTH TO WATER (FT):

TIME	VOLUME PUMPED	PUMPING RATE	pH	TEMP (C)	COND. mMHOS/CM	NTU
1040	2.5	0.5	6.41	20.0	142	90
1045	5.0	0.5	6.34	25.5	125	15.4
1050	7.5	0.5	6.22	25.5	112	24.4
1055	10.0	0.5	6.19	25.5	110	19.1
1100	12.5	0.5	6.13	25.5	108	18.6
1105	15.0	0.5	6.10	25.5	102	22.9
1110	17.5	0.5	6.10	25.5	102	27.5
1115	20.0	0.5	6.13	25.5	102	31.2

1150 TOOK GROUNDWATER SAMPLE
FINAL DEPTH TO WATER (FT):

WELL: OLD-OR-10
DATE: 11/10/94
FID READING AT WELL HEAD (PPM): 4
INITIAL DEPTH TO WATER (FT): 4.37

TIME	VOLUME PUMPED	PUMPING RATE	pH	TEMP (C)	COND. mMHOS/CM	NTU
845	2.5	0.5	5.67	25.5	208	150.2
850	5.0	0.5	5.66	25.5	235	39.2
855	7.5	0.5	5.65	25.5	239	31.6
900	10.0	0.5	5.71	25.5	237	34.3
905	12.5	0.5	5.72	25.5	221	21.7
910	15.0	0.5	5.72	25.5	222	13.7
915	17.5	0.5	5.70	25.5	227	10.8
920	20.0	0.5	5.75	25.5	225	13.8

925 TOOK GROUNDWATER SAMPLE
FINAL DEPTH TO WATER (FT):

APPENDIX E

COMPLETE ANALYTICAL DATA SET

Summary of analytical results, Volatile Organic Compounds in Trip Blanks, Orlando Background Sampling Program.

Identifier	00T00015		00T00016		00T00017		00T00018		00T00019		00T00020		00T00021		00T00022		00T00023		00T00024		00T00025	
Collect Date	18-Oct-94		19-Oct-94		20-Oct-94		21-Oct-94		26-Oct-94		25-Oct-94		27-Oct-94		28-Oct-94		9-Nov-94		10-Nov-94		11-Nov-94	
Volatile Organics, ug/L																						
1,1,1-Trichloroethane	10	U	10	U	10	U	10	U	10	U	10	U	10	U	10	U	1	U	1	U	1	U
1,1,2,2-Tetrachloroethane	10	U	10	U	10	U	10	U	10	U	10	U	10	U	10	U	1	U	1	U	1	U
1,1,2-Trichloroethane	10	U	10	U	10	U	10	U	10	U	10	U	10	U	10	U	1	U	1	U	1	U
1,1-Dichloroethane	10	U	10	U	10	U	10	U	10	U	10	U	10	U	10	U	1	U	1	U	1	U
1,1-Dichloroethene	10	U	10	U	10	U	10	U	10	U	10	U	10	U	10	U	1	U	1	U	1	U
1,2-Dichloroethane	10	U	10	U	10	U	10	U	10	U	10	U	10	U	10	U	1	U	1	U	1	U
1,2-Dibromo-3-chloropropane	NR		NR		NR		NR		NR		NR		NR		NR		1	U	1	U	1	U
1,2-Dibromoethane	NR		NR		NR		NR		NR		NR		NR		NR		1	U	1	U	1	U
1,2-Dichlorobenzene	NR		NR		NR		NR		NR		NR		NR		NR		1	U	1	U	1	U
1,2-Dichloroethene (total)	10	U	10	U	10	U	10	U	10	U	10	U	10	U	10	U	NR		NR		NR	
1,2-Dichloropropane	10	U	10	U	10	U	10	U	10	U	10	U	10	U	10	U	1	U	1	U	1	U
1,3-Dichlorobenzene	NR		NR		NR		NR		NR		NR		NR		NR		1	U	1	U	1	U
1,4-Dichlorobenzene	NR		NR		NR		NR		NR		NR		NR		NR		1	U	1	U	1	U
2-Butanone	10	U	10	U	10	U	10	U	10	U	10	U	10	U	10	U	5	R	5	R	5	R
2-Hexanone	10	U	10	U	10	U	10	U	10	U	10	U	10	U	10	U	5	R	5	R	5	R
4-Methyl-2-pentanone	10	U	10	U	10	U	10	U	10	U	10	U	10	U	10	U	5	U	5	U	5	U
Acetone	10	U	10	U	10	U	10	U	10	U	17	J	10	U	10	U	5	R	5	R	5	R
Benzene	10	U	10	U	10	U	10	U	10	U	10	U	10	U	10	U	1	U	1	U	1	U
Bromodichloromethane	10	U	10	U	10	U	10	U	10	U	10	U	10	U	10	U	1	U	1	U	1	U
Bromoform	10	U	10	U	10	U	10	U	10	U	10	U	10	U	10	U	1	U	1	U	1	U
Bromomethane	10	U	10	U	10	U	10	U	10	U	10	U	10	U	10	U	1	U	1	U	1	U
Carbon disulfide	10	U	10	U	10	U	10	U	10	U	10	U	10	U	10	U	1	U	1	U	1	U
Carbon tetrachloride	10	U	10	U	10	U	10	U	10	U	10	U	10	U	10	U	1	U	1	U	1	U
Chlorobenzene	10	U	10	U	10	U	10	U	10	U	10	U	10	U	10	U	1	U	1	U	1	U
Chloroethane	10	U	10	U	10	U	10	U	10	U	10	U	10	U	10	U	1	U	1	U	1	U
Chloroform	10	U	10	U	10	U	10	U	10	U	10	U	10	U	10	U	1	U	1	U	1	U
Chloromethane	10	U	10	U	10	U	10	U	10	U	10	U	10	U	10	U	1	U	1	U	1	U
cis-1,2-Dichloroethene	NR		NR		NR		NR		NR		NR		NR		NR		1	U	1	U	1	U
cis-1,3-Dichloropropene	10	U	10	U	10	U	10	U	10	U	10	U	10	U	10	U	1	U	1	U	1	U
Dibromochloromethane	10	U	10	U	10	U	10	U	10	U	10	U	10	U	10	U	1	U	1	U	1	U
Ethylbenzene	10	U	10	U	10	U	10	U	10	U	10	U	10	U	10	U	1	U	1	U	1	U
Methylene chloride	10	U	10	U	10	U	10	U	10	U	10	U	17		10	U	1	U	1	U	1	U
Styrene	10	U	10	U	10	U	10	U	10	U	10	U	10	U	10	U	1	U	1	U	1	U
Tetrachloroethene	10	U	10	U	10	U	10	U	10	U	10	U	10	U	10	U	1	U	1	U	1	U
Toluene	10	U	10	U	10	U	10	U	10	U	10	U	10	U	10	U	1		1		0.8	J
trans-1,2-Dichloroethene	NR		NR		NR		NR		NR		NR		NR		NR		1	U	1	U	1	U
trans-1,3-Dichloropropene	10	U	10	U	10	U	10	U	10	U	10	U	10	U	10	U	1	U	1	U	1	U
Trichloroethene	10	U	10	U	10	U	10	U	10	U	10	U	10	U	10	U	1	U	1	U	1	U
Vinyl chloride	10	U	10	U	10	U	10	U	10	U	10	U	10	U	10	U	1	U	1	U	1	U
Xylene (total)	10	U	10	U	10	U	10	U	10	U	10	U	10	U	10	U	1	U	1	U	1	U

NOTES: All analytical results expressed in micrograms per liter (ug/L).

U = Compound not detected at the contract required quantitation limit (CRQL) or method detection limit (Samples 00T00023, 00T00024 and 00T00025).

J = Reported concentration is an estimated quantity.

R = Rejected data during data validation.

NR = Compound not analyzed or quantified.

Summary of analytical results, Field and Rinsate Blanks, Orlando Background Sampling Program.

Identifier	00F00001		00R00016	00R00017	00R00018	00R00019	00R00020	00R00021	00R00022	00R00023	00R00024
Collect Date	26-Aug-94	7-Sep-94	18-Oct-94	19-Oct-94	20-Oct-94	21-Oct-94	26-Oct-94	25-Oct-94	27-Oct-94	28-Oct-94	9-Nov-94
Inorganics, ug/L											
Aluminum	17.4 U	NR	17.4 UJ	17.4 UJ	17.4 UJ	17.4 UJ	17.4 UJ	14.6 U	14.6 U	14.6 U	14.6 U
Antimony	1.2 U	NR	19.4 U	19.4 U	19.4 U	19.4 U	19.4 U	24.1 U	24.1 U	24.1 U	1.2 U
Arsenic	1.9 U	NR	1.9 U	1.9 U	1.9 U	1.9 U	1.9 U	1.9 U	1.9 U	1.5 U	1.5 U
Barium	0.65 U	NR	0.65 U	0.65 U	0.75 B	0.66 B	0.65 U	0.5 U	0.5 U	0.5 U	0.5 U
Beryllium	0.21 U	NR	0.21 U	0.21 U	0.21 U	0.21 U	0.21 U	0.2 U	0.2 U	0.2 U	0.2 U
Cadmium	2.9 U	NR	2.9 U	2.9 U	2.9 U	2.9 U	2.9 U	2.1 U	2.1 U	2.1 U	2.1 U
Calcium	14.9 UJ	NR	14.9 U	14.9 U	14.9 U	14.9 U	14.9 U	14.5 UJ	14.5 UJ	14.5 U	14.5 U
Chromium	1.8 U	NR	1.8 U	1.8 U	2.6 U	1.8 U	1.8 U	1.9 U	1.9 U	1.9 U	1.9 U
Cobalt	3 U	NR	3 U	3 U	3 U	3 U	3 U	2.6 U	2.6 U	2.6 U	2.6 U
Copper	1.7 U	NR	1.7 U	1.7 U	1.7 U	3.9 B	2.2 B	1.5 U	4.4 B	1.5 U	1.5 U
Iron	2.1 U	NR	11.3 J	12.6 J	74.8 J	24.6 J	2.1 UJ	6 U	6 U	6.8 B	6 U
Lead	0.83 U	NR	0.83 U	0.83 U	0.83 U	0.83 U	0.94 B	0.83 U	0.83 U	1.3 U	1.3 UJ
Magnesium	18.4 U	NR	18.4 U	18.4 UJ	18.4 UJ	18.4 UJ	18.4 UJ	18.7 U	18.7 U	18.7 U	18.7 U
Manganese	0.52 U	NR	0.57 UJ	0.52 U	1.5 B	0.57 B	0.52 U	0.7 U	0.7 U	0.7 U	0.7 U
Mercury	0.06 U	NR	0.06 U	0.06 U	0.06 U	0.06 U	0.06 U	0.06 U	0.06 U	0.08 B	0.02 UJ
Nickel	9.2 U	NR	9.2 U	9.2 U	9.2 U	9.2 U	9.2 U	9.1 U	9.1 U	9.1 U	9.1 UJ
Potassium	302 U	NR	302 U	332 B	302 U	302 U	302 U	339 U	339 U	339 U	339 U
Selenium	2 U	NR	2 U	2 U	2 U	2 U	2 U	2 U	2 U	2 U	2 U
Silver	2.6 U	NR	2.6 U	2.6 U	2.6 U	2.6 U	2.6 U	2.2 U	2.2 U	2.2 U	2.2 U
Sodium	15.7 UJ	NR	42.4 U	31.5 U	25.5 U	37.5 U	42.1 U	30.2 U	30.2 U	35.7 B	30.2 UJ
Thallium	1.3 U	NR	1.3 U	1.3 U	1.3 U	1.3 U	1.3 U	1.3 U	1.3 U	1.3 UJ	1.3 U
Vanadium	2.7 U	NR	2.7 U	2.7 U	2.7 U	2.7 U	2.7 U	2.5 U	2.5 U	2.5 U	2.5 U
Zinc	1.3 UJ	NR	1.3 UJ	1.3 UJ	1.3 UJ	1.3 UJ	1.3 UJ	1.1 U	1.1 U	2.1 B	10 B
Volatile Organics, ug/L											
1,1,1-Trichloroethane	NR	1 U	10 U	10 U	10 U	10 U	10 U	10 U	10 U	10 U	1 U
1,1,2,2-Tetrachloroethane	NR	1 U	10 U	10 U	10 U	10 U	10 U	10 U	10 U	10 U	1 U
1,1,2-Trichloroethane	NR	1 U	10 U	10 U	10 U	10 U	10 U	10 U	10 U	10 U	1 U
1,1-Dichloroethane	NR	1 U	10 U	10 U	10 U	10 U	10 U	10 U	10 U	10 U	1 U
1,1-Dichloroethene	NR	1 U	10 U	10 U	10 U	10 U	10 U	10 U	10 U	10 U	1 U
1,2-Dibromo-3-chloropropane	NR	1 U	NR	NR	NR	NR	NR	NR	NR	NR	1 R
1,2-Dibromoethane	NR	1 U	NR	NR	NR	NR	NR	NR	NR	NR	1 U
1,2-Dichlorobenzene	NR	1 U	NR	NR	NR	NR	NR	NR	NR	NR	1 U
1,2-Dichloroethane	NR	1 U	10 U	10 U	10 U	10 U	10 U	10 U	10 U	10 U	1 U
1,2-Dichloroethene (total)	NR	NR	10 U	10 U	10 U	10 U	10 U	10 U	10 U	10 U	NR
1,2-Dichloropropane	NR	2	10 U	10 U	10 U	10 U	10 U	10 U	10 U	10 U	2
1,3-Dichlorobenzene	NR	1 U	NR	NR	NR	NR	NR	NR	NR	NR	1 U
1,4-Dichlorobenzene	NR	1 U	NR	NR	NR	NR	NR	NR	NR	NR	1 U
2-Butanone	NR	5 R	8 J	10 U	10 U	10 U	10 U	10 U	10 U	10 U	5 R

Identifier	00F00001		00R00016	00R00017	00R00018	00R00019	00R00020	00R00021	00R00022	00R00023	00R00024
Collect Date	26-Aug-94	7-Sep-94	18-Oct-94	19-Oct-94	20-Oct-94	21-Oct-94	26-Oct-94	25-Oct-94	27-Oct-94	28-Oct-94	9-Nov-94
2-Hexanone	NR	5 R	10 U	10 U	10 U	10 U	10 U	10 U	10 U	10 U	5 U
4-Methyl-2-pentanone	NR	5 U	10 U	10 U	10 U	10 U	10 U	10 U	10 U	10 U	5 U
Acetone	NR	3 R	10 U	10 U	10 U	10 U	10 U	10 U	14 J	12	5 R
Benzene	NR	1 U	10 U	10 U	10 U	10 U	10 U	10 U	10 U	10 U	1 U
Bromochloromethane	NR	1 U	NR	NR	NR	NR	NR	NR	NR	NR	1 U
Bromodichloromethane	NR	1 U	10 U	10 U	10 U	10 U	10 U	10 U	10 U	10 U	1 U
Bromoform	NR	1 U	10 U	10 U	10 U	10 U	10 U	10 U	10 U	10 U	1 U
Bromomethane	NR	1 U	10 U	10 U	10 U	10 U	10 U	10 U	10 U	10 U	1 U
Carbon disulfide	NR	0.8 J	10 U	10 U	10 U	10 U	10 U	10 U	10 U	10 U	1 U
Carbon tetrachloride	NR	1 U	10 U	10 U	10 U	10 U	10 U	10 U	10 U	10 U	1 U
Chlorobenzene	NR	1 U	10 U	10 U	10 U	10 U	10 U	10 U	10 U	10 U	1 U
Chloroethane	NR	1 U	10 U	10 U	10 U	10 U	10 U	10 U	10 U	10 U	1 U
Chloroform	NR	1 U	10 U	10 U	10 U	10 U	10 U	10 U	10 U	10 U	1 U
Chloromethane	NR	0.6 J	10 U	10 U	10 U	10 U	10 U	10 U	10 U	10 U	1 U
cis-1,2-Dichloroethene	NR	1 U	NR	NR	NR	NR	NR	NR	NR	NR	1 U
cis-1,3-Dichloropropene	NR	1 U	10 U	10 U	10 U	10 U	10 U	10 U	10 U	10 U	1 U
Dibromochloromethane	NR	1 U	10 U	10 U	10 U	10 U	10 U	10 U	10 U	10 U	1 U
Ethylbenzene	NR	1 U	10 U	10 U	10 U	10 U	10 U	10 U	10 U	10 U	1 U
Methylene chloride	NR	2 U	10 U	10 U	10 U	10 U	10 U	10 U	13	15	2 U
Styrene	NR	1 U	10 U	10 U	10 U	10 U	10 U	10 U	10 U	10 U	1 U
Tetrachloroethene	NR	1 U	10 U	10 U	10 U	10 U	10 U	10 U	10 U	10 U	1 U
Toluene	NR	1 U	10 U	10 U	10 U	10 U	10 U	10 U	10 U	10 U	1 U
trans-1,2-Dichloroethene	NR	1 U	NR	NR	NR	NR	NR	NR	NR	NR	1 U
trans-1,3-Dichloropropene	NR	1 U	10 U	10 U	10 U	10 U	10 U	10 U	10 U	10 U	1 U
Trichloroethene	NR	1 U	10 U	10 U	10 U	10 U	10 U	10 U	10 U	10 U	1 U
Vinyl chloride	NR	1 U	10 U	10 U	10 U	10 U	10 U	10 U	10 U	10 U	1 U
Xylene (total)	NR	1 U	10 U	10 U	10 U	10 U	10 U	10 U	10 U	10 U	1 U
Semivolatile Organics, ug/L											
1,2,4-Trichlorobenzene	10 U	NR	10 U	10 U	10 U	10 U	10 U	10 U	10 U	10 U	10 U
1,2-Dichlorobenzene	10 U	NR	10 U	10 U	10 U	10 U	10 U	10 U	10 U	10 U	10 U
1,3-Dichlorobenzene	10 U	NR	10 U	10 U	10 U	10 U	10 U	10 U	10 U	10 U	10 U
1,4-Dichlorobenzene	10 U	NR	10 U	10 U	10 U	10 U	10 U	10 U	10 U	10 U	10 U
2,2'-oxybis(1-Chloropropane)	10 U	NR	10 U	10 UJ	10 U	10 U	10 U	10 U	10 U	10 U	10 U
2,4,5-Trichlorophenol	25 U	NR	25 U	25 U	25 U	25 U	25 U	25 U	25 U	25 U	25 U
2,4,6-Trichlorophenol	10 U	NR	10 U	10 U	10 U	10 U	10 U	10 U	10 U	10 U	10 U
2,4-Dichlorophenol	10 U	NR	10 U	10 U	10 U	10 U	10 U	10 U	10 U	10 U	10 U
2,4-Dimethylphenol	10 U	NR	10 U	10 U	10 U	10 U	10 U	10 U	10 U	10 U	10 U
2,4-Dinitrophenol	25 U	NR	25 U	25 U	25 U	25 U	25 U	25 U	25 U	25 U	25 U
2,4-Dinitrotoluene	10 U	NR	10 U	10 U	10 U	10 U	10 U	10 U	10 U	10 U	10 U
2,6-Dinitrotoluene	10 U	NR	10 U	10 U	10 U	10 U	10 U	10 U	10 U	10 U	10 U
2-Chloronaphthalene	10 U	NR	10 U	10 U	10 U	10 U	10 U	10 U	10 U	10 U	10 U
2-Chlorophenol	10 U	NR	10 U	10 U	10 U	10 U	10 U	10 U	10 U	10 U	10 U

Identifier	00F00001		00R00016	00R00017	00R00018	00R00019	00R00020	00R00021	00R00022	00R00023	00R00024
Collect Date	26-Aug-94	7-Sep-94	18-Oct-94	19-Oct-94	20-Oct-94	21-Oct-94	26-Oct-94	25-Oct-94	27-Oct-94	28-Oct-94	9-Nov-94
2-Methylnaphthalene	10 U	NR	10 U	10 U	10 U	10 U	10 U	10 U	10 U	10 U	10 U
2-Methylphenol	10 U	NR	10 U	10 U	10 U	10 U	10 U	10 U	10 U	10 U	10 U
2-Nitroaniline	25 U	NR	25 U	25 U	25 U	25 U	25 U	25 U	25 U	25 U	25 U
2-Nitrophenol	10 U	NR	10 U	10 U	10 U	10 U	10 U	10 U	10 U	10 U	10 U
3,3'-Dichlorobenzidine	10 U	NR	10 U	10 U	10 U	10 U	10 U	10 U	10 U	10 U	10 U
3-Nitroaniline	25 U	NR	25 U	25 U	25 U	25 U	25 U	25 U	25 U	25 U	25 U
4,6-Dinitro-2-methylphenol	25 U	NR	25 U	25 U	25 U	25 U	25 U	25 U	25 U	25 U	25 U
4-Bromophenyl-phenylether	10 U	NR	10 U	10 U	10 U	10 U	10 U	10 U	10 U	10 U	10 U
4-Chloro-3-methylphenol	10 U	NR	10 U	10 U	10 U	10 U	10 U	10 U	10 U	10 U	10 U
4-Chloroaniline	10 U	NR	10 U	10 U	10 U	10 U	10 U	10 U	10 U	10 U	10 U
4-Chlorophenyl-phenylether	10 U	NR	10 U	10 U	10 U	10 U	10 U	10 U	10 U	10 U	10 U
4-Methylphenol	10 U	NR	10 U	10 U	10 U	10 U	10 U	10 U	10 U	10 U	10 U
4-Nitroaniline	25 U	NR	25 U	25 U	25 U	25 U	25 U	25 U	25 U	25 U	25 U
4-Nitrophenol	25 U	NR	25 U	25 U	25 U	25 U	25 U	25 U	25 U	25 U	25 U
Acenaphthene	10 U	NR	10 U	10 U	10 U	10 U	10 U	10 U	10 U	10 U	10 U
Acenaphthylene	10 U	NR	10 U	10 U	10 U	10 U	10 U	10 U	10 U	10 U	10 U
Anthracene	10 U	NR	10 U	10 U	10 U	10 U	10 U	10 U	10 U	10 U	10 U
Benzo(a)anthracene	10 U	NR	10 U	10 U	10 U	10 U	10 U	10 U	10 U	10 U	10 U
Benzo(a)pyrene	0.1 U	NR	10 U	10 U	10 U	10 U	10 U	10 U	10 U	10 U	0.1 U
Benzo(b)fluoranthene	10 U	NR	10 U	10 U	10 U	10 U	10 U	10 U	10 U	10 U	10 U
Benzo(g,h,i)perylene	10 U	NR	10 U	10 U	10 U	10 U	10 U	10 U	10 U	10 U	10 U
Benzo(k)fluoranthene	10 U	NR	10 U	10 U	10 U	10 U	10 U	10 U	10 U	10 U	10 U
bis(2-Chloroethoxy)methane	10 U	NR	10 U	10 U	10 U	10 U	10 U	10 U	10 U	10 U	10 U
bis(2-Chloroethyl)ether	10 U	NR	10 U	10 U	10 U	10 U	10 U	10 U	10 U	10 U	10 U
bis(2-Ethylhexyl)phthalate	1 U	NR	10 U	10 U	10 U	10 U	10 U	10 U	10 U	10 U	5 U
Butylbenzylphthalate	10 U	NR	10 U	10 U	10 U	10 U	10 U	10 U	10 U	10 U	10 U
Carbazole	10 U	NR	10 U	10 U	10 U	10 U	10 U	10 U	10 U	10 U	10 U
Chrysene	10 U	NR	10 U	10 U	10 U	10 U	10 U	10 U	10 U	10 U	10 U
Di-n-butylphthalate	10 U	NR	10 U	10 U	10 U	10 U	10 U	10 U	10 U	10 U	10 U
Di-n-octylphthalate	10 U	NR	10 U	10 U	10 U	10 U	10 U	10 U	10 U	10 U	10 U
Dibenz(a,h)anthracene	10 U	NR	10 U	10 U	10 U	10 U	10 U	10 U	10 U	10 U	10 U
Dibenzofuran	10 U	NR	10 U	10 U	10 U	10 U	10 U	10 U	10 U	10 U	10 U
Diethylphthalate	10 U	NR	10 U	10 U	10 U	10 U	10 U	10 U	10 U	10 U	10 U
Dimethylphthalate	10 U	NR	10 U	10 U	10 U	10 U	10 U	10 U	10 U	10 U	10 U
Fluoranthene	10 U	NR	10 U	10 U	10 U	10 U	10 U	10 U	10 U	10 U	10 U
Fluorene	10 U	NR	10 U	10 U	10 U	10 U	10 U	10 U	10 U	10 U	10 U
Hexachlorobenzene	1 U	NR	10 U	10 U	10 U	10 U	10 U	10 U	10 U	10 U	3 U
Hexachlorobutadiene	10 U	NR	10 U	10 U	10 U	10 U	10 U	10 U	10 U	10 U	10 U
Hexachlorocyclopentadiene	10 UJ	NR	10 U	10 U	10 U	10 U	10 U	10 U	10 U	10 U	10 U
Hexachloroethane	10 U	NR	10 U	10 U	10 U	10 U	10 U	10 U	10 U	10 U	10 U
Indeno(1,2,3-cd)pyrene	10 U	NR	10 U	10 U	10 U	10 U	10 U	10 U	10 U	10 U	10 U
Isophorone	10 U	NR	10 U	10 U	10 U	10 U	10 U	10 U	10 U	10 U	10 U
N-Nitroso-di-n-propylamine	10 U	NR	10 U	10 U	10 U	10 U	10 U	10 U	10 U	10 U	10 U

Identifier	00F00001		00R00016	00R00017	00R00018	00R00019	00R00020	00R00021	00R00022	00R00023	00R00024
Collect Date	26-Aug-94	7-Sep-94	18-Oct-94	19-Oct-94	20-Oct-94	21-Oct-94	26-Oct-94	25-Oct-94	27-Oct-94	28-Oct-94	9-Nov-94
N-Nitrosodiphenylamine (1)	10 U	NR	10 U	10 U	10 U	10 U	10 U	10 U	10 U	10 U	10 U
Naphthalene	10 U	NR	10 U	10 U	10 U	10 U	10 U	10 U	10 U	10 U	10 U
Nitrobenzene	10 U	NR	10 U	10 U	10 U	10 U	10 U	10 U	10 U	10 U	10 U
Pentachlorophenol	1 U	NR	25 U	25 U	25 U	25 U	25 U	25 U	25 U	25 U	5 U
Phenanthrene	10 U	NR	10 U	10 U	10 U	10 U	10 U	10 U	10 U	10 U	10 U
Phenol	10 U	NR	10 U	2 J	10 U	1 J	10 U	10 U	10 U	10 U	10 U
Pyrene	10 U	NR	10 U	10 U	10 U	10 U	10 U	10 U	10 U	10 U	10 U
Pesticides/PCBs, ug/L											
2,4,5-T	0.5 U	NR	0.5 U	0.5 U	NR	NR	NR	0.5 U	0.5 U	0.5 U	0.5 U
2,4-D	2.5 U	NR	2.5 U	2.5 U	NR	NR	NR	2.5 U	2.5 U	2.5 U	2.5 U
2,4-DB	2.5 U	NR	2.5 U	2.5 U	NR	NR	NR	2.5 U	2.5 U	2.5 U	2.5 U
2,4-DP (Dichloroprop)	2.5 U	NR	2.5 U	2.5 U	NR	NR	NR	2.5 U	2.5 U	2.5 U	2.5 U
4,4'-DDD	0.1 U	NR	0.1 U	0.1 U	0.1 U	0.1 U	0.1 U	0.1 U	0.1 U	0.1 U	0.1 U
4,4'-DDE	0.1 U	NR	0.1 U	0.1 U	0.1 U	0.1 U	0.1 U	0.1 U	0.1 U	0.1 U	0.1 U
4,4'-DDT	0.1 U	NR	0.1 U	0.1 U	0.1 U	0.1 U	0.1 U	0.1 U	0.1 U	0.1 U	0.1 U
Aldrin	0.05 U	NR	0.05 U	0.05 U	0.05 U	0.05 U	0.05 U	0.05 U	0.05 U	0.05 U	0.05 U
alpha-BHC	0.05 U	NR	0.05 U	0.05 U	0.05 U	0.05 U	0.05 U	0.05 U	0.05 U	0.05 U	0.05 U
alpha-Chlordane	0.05 U	NR	0.05 U	0.05 U	0.05 U	0.05 U	0.05 U	0.05 U	0.05 U	0.05 U	0.05 U
Aroclor-1016	0.5 U	NR	1 U	1 U	1 U	1 U	1 U	1 U	1 U	1 U	0.5 U
Aroclor-1221	0.5 U	NR	2 U	2 U	2 U	2 U	2 U	2 U	2 U	2 U	0.5 U
Aroclor-1232	0.5 U	NR	1 U	1 U	1 U	1 U	1 U	1 U	1 U	1 U	0.5 U
Aroclor-1242	0.5 U	NR	1 U	1 U	1 U	1 U	1 U	1 U	1 U	1 U	0.5 U
Aroclor-1248	0.5 U	NR	1 U	1 U	1 U	1 U	1 U	1 U	1 U	1 U	0.5 U
Aroclor-1254	0.5 U	NR	1 U	1 U	1 U	1 U	1 U	1 U	1 U	1 U	0.5 U
Aroclor-1260	0.5 U	NR	1 U	1 U	1 U	1 U	1 U	1 U	1 U	1 U	0.5 U
beta-BHC	0.05 U	NR	0.05 U	0.05 U	0.05 U	0.05 U	0.05 U	0.05 U	0.05 U	0.05 U	0.05 U
Dalapon	5 U	NR	5 U	5 U	NR	NR	NR	5 U	5 U	5 U	5 U
delta-BHC	0.05 U	NR	0.05 U	0.05 U	0.05 U	0.05 U	0.05 U	0.05 U	0.05 U	0.05 U	0.05 U
Dicamba	0.5 U	NR	0.5 U	0.5 U	NR	NR	NR	0.5 U	0.5 U	0.5 U	0.5 U
Dieldrin	0.1 U	NR	0.1 U	0.1 U	0.1 U	0.1 U	0.1 U	0.1 U	0.1 U	0.1 U	0.1 U
Dinoseb	0.5 U	NR	0.5 U	0.5 U	NR	NR	NR	0.5 U	0.5 U	0.5 U	0.5 U
Endosulfan I	0.05 U	NR	0.05 U	0.05 U	0.05 U	0.05 U	0.05 U	0.05 U	0.05 U	0.05 U	0.05 U
Endosulfan II	0.1 U	NR	0.1 U	0.1 U	0.1 U	0.1 U	0.1 U	0.1 U	0.1 U	0.1 U	0.1 U
Endosulfan sulfate	0.1 U	NR	0.1 U	0.1 U	0.1 U	0.1 U	0.1 U	0.1 U	0.1 U	0.1 U	0.1 U
Endothall	9 U	NR	NR	NR	NR	NR	NR	NR	NR	NR	NR
Endrin	0.1 U	NR	0.1 U	0.1 U	0.1 U	0.1 U	0.1 U	0.1 U	0.1 U	0.1 U	0.1 U
Endrin aldehyde	0.1 U	NR	0.1 U	0.1 U	0.1 U	0.1 U	0.1 U	0.1 U	0.1 U	0.1 U	0.1 U
Endrin ketone	0.1 U	NR	0.1 U	0.1 U	0.1 U	0.1 U	0.1 U	0.1 U	0.1 U	0.1 U	0.1 U
gamma-BHC (Lindane)	0.05 U	NR	0.05 U	0.05 U	0.05 U	0.05 U	0.05 U	0.05 U	0.05 U	0.05 U	0.05 U
gamma-Chlordane	0.05 U	NR	0.05 U	0.05 U	0.05 U	0.05 U	0.05 U	0.05 U	0.05 U	0.05 U	0.05 U
Heptachlor	0.05 U	NR	0.05 U	0.05 U	0.05 U	0.05 U	0.05 U	0.05 U	0.05 U	0.05 U	0.05 U
Heptachlor epoxide	0.05 U	NR	0.05 U	0.05 U	0.05 U	0.05 U	0.05 U	0.05 U	0.05 U	0.05 U	0.05 U

Identifier	00F00001		00R00016	00R00017	00R00018	00R00019	00R00020	00R00021	00R00022	00R00023	00R00024
Collect Date	26-Aug-94	7-Sep-94	18-Oct-94	19-Oct-94	20-Oct-94	21-Oct-94	26-Oct-94	25-Oct-94	27-Oct-94	28-Oct-94	9-Nov-94
MCPA	250 U	NR	250 U	250 U	NR	NR	NR	250 U	250 U	250 U	250 U
MCPP	250 U	NR	250 U	250 U	NR	NR	NR	250 U	250 U	250 U	250 U
Methoxychlor	0.5 U	NR	0.5 U	0.5 U	0.5 U	0.5 U	0.5 U	0.5 U	0.5 U	0.5 U	0.5 U
Silvex (2,4,5-TP)	0.5 U	NR	0.5 U	0.5 U	NR	NR	NR	0.5 U	0.5 U	0.5 U	0.5 U
Toxaphene	5 U	NR	5 U	5 U	5 U	5 U	5 U	5 U	5 U	5 U	5 U
Radiological, pCi/L											
Gross Alpha	1.6	NR	NR	NR	NR	NR	NR	NR	NR	NR	NR
Gross Beta	3 U	NR	NR	NR	NR	NR	NR	NR	NR	NR	NR
Misc. wet chemistry, mg/L											
Alkalinity as CaCO3	1 U	NR	NR	NR	NR	NR	NR	NR	NR	NR	NR
Hardness as CaCO3	1 U	NR	NR	NR	NR	NR	NR	NR	NR	NR	NR
Total Dissolved Solids	1 U	NR	NR	NR	NR	NR	NR	NR	NR	NR	NR
Total Petroleum Hydrocarbons	NR	NR	NR	NR	NR	NR	1 U	NR	NR	NR	NR
Total Suspended Solids	1 U	NR	NR	NR	NR	NR	NR	NR	NR	NR	NR

NOTES:

U = Compound not detected at the contract required quantitation limit (CRQL) or method detection limit.
J = Reported concentration is an estimated quantity.
R = Rejected data during data validation.
NR = Compound not requested to be analyzed or quantified.

Identifier	ORS00101		ORS00201		ORS00301		ORS00401		ORS00501		ORS00601		ORS00701		ORS00801		ORS00901		ORS01001	
Collect Date	25-Oct-94		25-Oct-94		25-Oct-94		26-Oct-94		26-Oct-94		27-Oct-94		27-Oct-94		27-Oct-94		27-Oct-94		28-Oct-94	
Inorganics, mg/kg																				
Aluminum	127		1940		1460		1020		69.4		1680		2310		2270		1600		1570	
Antimony	4.9	U	5	U	5.1	U	4.9	U	4.9	U	5.3	U	5.5	U	5.4	U	5.3	U	5.1	U
Arsenic	0.38	U	0.39	J	0.41	B	0.38	J	0.38	U	1.1	J	0.9	B	0.69	B	0.81	B	1.3	B
Barium	2.5	B	8.7	B	3.4	B	2.9	B	0.41	U	4.2	B	3.7	B	1.8	B	6.7	B	4.2	B
Beryllium	0.04	U	0.05	B	0.04	U	0.04	U	0.04	U	0.04	U	0.05	U	0.04	U	0.05	B	0.04	U
Cadmium	0.49	B	0.43	U	0.45	U	0.43	U	0.42	U	0.46	U	0.48	U	0.47	U	0.46	U	0.57	U
Calcium	816	B	124000		5620		293	B	39.6	J	527	B	737	B	40800		12100		40400	
Chromium	2.1		5.6		2.9		1.2	B	0.62	B	2.4		2.4		2.8		2.7		3.6	
Cobalt	0.53	U	0.54	U	0.55	U	0.53	U	0.53	U	0.57	U	0.6	U	0.58	U	0.58	U	0.55	U
Copper	1.5	B	2.6	B	2	B	0.85	U	0.54	U	1.7	B	1.1	B	0.56	U	1.1	B	0.99	U
Iron	139	J	512	J	575	J	357	J	25.6	J	276	J	394	J	195	J	600	J	276	
Lead	12.6	J	10.9	J	8.5	J	2.5	J	1.1	J	9.5	J	3.4	J	1.1	J	10	J	7	
Magnesium	13.2	B	1330		98.4	B	33.5	B	6.5	B	25.3	B	45.1	B	325	B	126	B	408	B
Manganese	7.9		12.5		7.9		1.9	B	0.37	B	2.6	B	1.1	B	4.5		3.5		5.9	
Mercury	0.01	B	0.01	U	0.02	B	0.02	B	0.01	U	0.02	B	0.04	B	0.02	B	0.02	B	0.05	U
Nickel	1.9	U	2.2	B	1.9	U	1.8	U	1.8	U	2	U	2.1	U	2	U	2	U	1.9	U
Potassium	69.5	U	70.2	U	77.4	B	68.7	U	68.5	U	74.1	U	77.7	U	75.7	U	75	U	72.4	U
Selenium	0.45	B	0.41	U	0.53	J	0.4	UJ	0.4	UJ	0.43	U	0.57	J	0.44	UJ	0.44	UJ	0.42	U
Silver	0.45	U	0.46	U	0.47	U	0.45	U	0.49	B	0.48	U	0.5	U	0.49	U	0.49	U	0.47	U
Sodium	6.2	U	45.7	B	6.4	U	6.1	U	6.1	U	6.6	U	6.9	U	6.7	U	6.7	U	16	U
Thallium	0.27	U	1	J	0.28	U	0.26	U	0.26	UJ	0.28	U	0.3	U	0.29	U	0.29	UJ	0.28	UJ
Vanadium	0.67	B	5.7	B	1.8	B	0.53	B	0.51	U	1.3	B	1.4	B	2.7	B	2.4	B	2.1	B
Zinc	10.1		20.9		4.3		1	B	0.42	B	3.4	B	0.8	B	0.4	B	2.8	B	1.7	U
Volatile Organics, ug/kg																				
1,1,1-Trichloroethane	10	U	10	U	11	U	10	U	10	U	11	U	11	U	11	U	11	U	11	U
1,1,2,2-Tetrachloroethane	10	U	10	U	11	U	10	U	10	U	11	U	11	U	11	U	11	U	11	U
1,1,2-Trichloroethane	10	U	10	U	11	U	10	U	10	U	11	U	11	U	11	U	11	U	11	U
1,1-Dichloroethane	10	U	10	U	11	U	10	U	10	U	11	U	11	U	11	U	11	U	11	U
1,1-Dichloroethene	10	U	10	U	11	U	10	U	10	U	11	U	11	U	11	U	11	U	11	U
1,2-Dichloroethane	10	U	10	U	11	U	10	U	10	U	11	U	11	U	11	U	11	U	11	U
1,2-Dichloroethene (total)	10	U	10	U	11	U	10	U	10	U	11	U	11	U	11	U	11	U	11	U
1,2-Dichloropropane	10	U	10	U	11	U	10	U	10	U	11	U	11	U	11	U	11	U	11	U
2-Butanone	10	U	10	U	11	U	10	U	10	U	11	U	11	U	11	U	11	U	11	U
2-Hexanone	10	U	10	U	11	U	10	U	10	U	11	U	11	U	11	U	11	U	11	U
4-Methyl-2-pentanone	10	U	10	U	11	U	10	U	10	U	11	U	11	U	11	U	11	U	11	U
Acetone	10	U	10	U	13	U	10	U	10	U	11	U	11	U	11	U	11	U	11	U
Benzene	10	U	10	U	11	U	10	U	10	U	11	U	11	U	11	U	11	U	11	U
Bromodichloromethane	10	U	10	U	11	U	10	U	10	U	11	U	11	U	11	U	11	U	11	U
Bromoform	10	U	10	U	11	U	10	U	10	U	11	U	11	U	11	U	11	U	11	U

Identifier	ORS00101		ORS00201		ORS00301		ORS00401		ORS00501		ORS00601		ORS00701		ORS00801		ORS00901		ORS01001	
Collect Date	25-Oct-94		25-Oct-94		25-Oct-94		26-Oct-94		26-Oct-94		27-Oct-94		27-Oct-94		27-Oct-94		27-Oct-94		28-Oct-94	
Bromomethane	10	U	10	U	11	U	10	U	10	U	11	U	11	U	11	U	11	U	11	U
Carbon disulfide	10	U	10	U	11	U	10	U	10	U	11	U	11	U	11	U	11	U	11	U
Carbon tetrachloride	10	U	10	U	11	U	10	U	10	U	11	U	11	U	11	U	11	U	11	U
Chlorobenzene	10	U	10	U	11	U	10	U	10	U	11	U	11	U	11	U	11	U	11	U
Chloroethane	10	U	10	U	11	U	10	U	10	U	11	U	11	U	11	U	11	U	11	U
Chloroform	10	U	10	U	11	U	10	U	10	U	11	U	11	U	11	U	11	U	11	U
Chloromethane	10	U	10	U	11	U	10	U	10	U	11	U	11	U	11	U	11	U	11	U
cis-1,3-Dichloropropene	10	U	10	U	11	U	10	U	10	U	11	U	11	U	11	U	11	U	11	U
Dibromochloromethane	10	U	10	U	11	U	10	U	10	U	11	U	11	U	11	U	11	U	11	U
Ethylbenzene	10	U	10	U	11	U	10	U	10	U	11	U	11	U	11	U	11	U	11	U
Methylene chloride	10	U	10	U	11	U	10	U	10	U	11	U	11	U	11	U	11	U	11	U
Styrene	10	U	10	U	11	U	10	U	10	U	11	U	11	U	11	U	11	U	11	U
Tetrachloroethene	10	U	10	U	11	U	10	U	10	U	11	U	11	U	11	U	11	U	11	U
Toluene	10	U	10	U	11	U	10	U	10	U	11	U	11	U	11	U	11	U	2	J
trans-1,3-Dichloropropene	10	U	10	U	11	U	10	U	10	U	11	U	11	U	11	U	11	U	11	U
Trichloroethene	10	U	10	U	11	U	10	U	10	U	11	U	11	U	11	U	11	U	11	U
Vinyl chloride	10	U	10	U	11	U	10	U	10	U	11	U	11	U	11	U	11	U	11	U
Xylene (total)	10	U	10	U	11	U	10	U	10	U	11	U	11	U	11	U	11	U	11	U
Semivolatile Organics, ug/kg																				
1,2,4-Trichlorobenzene	340	U	340	U	350	U	340	U	340	U	360	U	380	U	370	U	1500	U	350	U
1,2-Dichlorobenzene	340	U	340	U	350	U	340	U	340	U	360	U	380	U	370	U	1500	U	350	U
1,3-Dichlorobenzene	340	U	340	U	350	U	340	U	340	U	360	U	380	U	370	U	1500	U	350	U
1,4-Dichlorobenzene	340	U	340	U	350	U	340	U	340	U	360	U	380	U	370	U	1500	U	350	U
2,2'-oxybis(1-Chloropropane)	340	U	340	U	350	U	340	U	340	U	360	U	380	U	370	U	1500	U	350	U
2,4,5-Trichlorophenol	850	U	860	U	890	U	840	U	840	U	900	U	960	U	920	U	3700	U	890	U
2,4,6-Trichlorophenol	340	U	340	U	350	U	340	U	340	U	360	U	380	U	370	U	1500	U	350	U
2,4-Dichlorophenol	340	U	340	U	350	U	340	U	340	U	360	U	380	U	370	U	1500	U	350	U
2,4-Dimethylphenol	340	U	340	U	350	U	340	U	340	U	360	U	380	U	370	U	1500	U	350	U
2,4-Dinitrophenol	850	U	860	U	890	U	840	U	840	U	900	U	960	U	920	U	3700	U	890	U
2,4-Dinitrotoluene	340	U	340	U	350	U	340	U	340	U	360	U	380	U	370	U	1500	U	350	U
2,6-Dinitrotoluene	340	U	340	U	350	U	340	U	340	U	360	U	380	U	370	U	1500	U	350	U
2-Chloronaphthalene	340	U	340	U	350	U	340	U	340	U	360	U	380	U	370	U	1500	U	350	U
2-Chlorophenol	340	U	340	U	350	U	340	U	340	U	360	U	380	U	370	U	1500	U	350	U
2-Methylnaphthalene	340	U	340	U	350	U	340	U	340	U	360	U	380	U	370	U	1500	U	350	U
2-Methylphenol	340	U	340	U	350	U	340	U	340	U	360	U	380	U	370	U	1500	U	350	U
2-Nitroaniline	850	U	860	U	890	U	840	U	840	U	900	U	960	U	920	U	3700	U	890	U
2-Nitrophenol	340	U	340	U	350	U	340	U	340	U	360	U	380	U	370	U	1500	U	350	U
3,3'-Dichlorobenzidine	340	U	340	U	350	U	340	U	340	U	360	U	380	U	370	U	1500	U	350	U
3-Nitroaniline	850	U	860	U	890	U	840	U	840	U	900	U	960	U	920	U	3700	U	890	U
4,6-Dinitro-2-methylphenol	850	U	860	U	890	U	840	U	840	U	900	U	960	U	920	U	3700	U	890	U
4-Bromophenyl-phenylether	340	U	340	U	350	U	340	U	340	U	360	U	380	U	370	U	1500	U	350	U

Identifier	ORS00101		ORS00201		ORS00301		ORS00401		ORS00501		ORS00601		ORS00701		ORS00801		ORS00901		ORS01001	
Collect Date	25-Oct-94		25-Oct-94		25-Oct-94		26-Oct-94		26-Oct-94		27-Oct-94		27-Oct-94		27-Oct-94		27-Oct-94		28-Oct-94	
4-Chloro-3-methylphenol	340	U	340	U	350	U	340	U	340	U	360	U	380	U	370	U	1500	U	350	U
4-Chloroaniline	340	U	340	U	350	U	340	U	340	U	360	U	380	U	370	U	1500	U	350	U
4-Chlorophenyl-phenylether	340	U	340	U	350	U	340	U	340	U	360	U	380	U	370	U	1500	U	350	U
4-Methylphenol	340	U	340	U	350	U	340	U	340	U	360	U	380	U	370	U	1500	U	350	U
4-Nitroaniline	850	U	860	U	890	U	840	U	840	U	900	U	960	U	920	U	3700	U	890	U
4-Nitrophenol	850	U	860	U	890	U	840	U	840	U	900	U	960	U	920	U	3700	U	890	U
Acenaphthene	340	U	340	U	350	U	340	U	340	U	360	U	380	U	370	U	1500	U	350	U
Acenaphthylene	340	U	340	U	350	U	340	U	340	U	360	U	380	U	370	U	1500	U	350	U
Anthracene	340	U	340	U	350	U	340	U	340	U	360	U	380	U	370	U	1500	U	350	U
Benzo(a)anthracene	340	U	340	U	350	U	340	U	340	U	360	U	380	U	370	U	3000		350	U
Benzo(a)pyrene	340	U	340	U	350	U	340	U	340	U	360	U	380	U	370	U	5500		350	U
Benzo(b)fluoranthene	340	U	340	U	350	U	340	U	340	U	360	U	380	U	370	U	5900	J	350	U
Benzo(g,h,i)perylene	340	U	110	J	91	J	340	U	340	U	360	U	380	U	370	U	4400	J	350	U
Benzo(k)fluoranthene	340	U	340	U	350	U	340	U	340	U	360	U	380	U	370	U	4400		350	U
bis(2-Chloroethoxy)methane	340	U	340	U	350	U	340	U	340	U	360	U	380	U	370	U	1500	U	350	U
bis(2-Chloroethyl)ether	340	U	340	U	350	U	340	U	340	U	360	U	380	U	370	U	1500	U	350	U
bis(2-Ethylhexyl)phthalate	340	U	340	U	350	U	340	U	340	U	360	U	380	U	370	U	1500	U	350	U
Butylbenzylphthalate	340	U	340	U	350	U	340	U	340	U	360	U	380	U	370	U	1500	U	350	U
Carbazole	340	U	340	U	350	U	340	U	340	U	360	U	380	U	370	U	1500	U	350	U
Chrysene	340	U	340	U	350	U	340	U	340	U	360	U	380	U	370	U	4700	J	350	U
Di-n-butylphthalate	320	J	550		340	J	560		340	U	1000	U	380	U	370	U	1500	U	350	U
Di-n-octylphthalate	340	U	340	U	350	U	340	U	340	U	260	J	200	J	370	U	1500	U	350	U
Dibenz(a,h)anthracene	340	U	340	U	350	U	340	U	340	U	360	U	380	U	370	U	1500	U	350	U
Dibenzofuran	340	U	340	U	350	U	340	U	340	U	360	U	380	U	370	U	1500	U	350	U
Diethylphthalate	340	U	340	U	350	U	340	U	340	U	360	U	380	U	370	U	1500	U	350	U
Dimethylphthalate	340	U	340	U	350	U	340	U	340	U	360	U	380	U	370	U	1500	U	350	U
Fluoranthene	340	U	340	U	350	U	340	U	340	U	360	U	380	U	370	U	3500		350	U
Fluorene	340	U	340	U	350	U	340	U	340	U	360	U	380	U	370	U	1500	U	350	U
Hexachlorobenzene	340	U	340	U	350	U	340	U	340	U	360	U	380	U	370	U	1500	U	350	U
Hexachlorobutadiene	340	U	340	U	350	U	340	U	340	U	360	U	380	U	370	U	1500	U	350	U
Hexachlorocyclopentadiene	340	U	340	U	350	U	340	U	340	U	360	U	380	U	370	U	1500	U	350	U
Hexachloroethane	340	U	340	U	350	U	340	U	340	U	360	U	380	U	370	U	1500	U	350	U
Indeno(1,2,3-cd)pyrene	340	U	340	U	350	U	340	U	340	U	360	U	380	U	370	U	4400		350	U
Isophorone	340	U	340	U	350	U	340	U	340	U	360	U	380	U	370	U	1500	U	350	U
N-Nitroso-di-n-propylamine	340	U	340	U	350	U	340	U	340	U	360	U	380	U	370	U	1500	U	350	U
N-Nitrosodiphenylamine (1)	340	U	340	U	350	U	340	U	340	U	360	U	380	U	370	U	1500	U	350	U
Naphthalene	340	U	340	U	350	U	340	U	340	U	360	U	380	U	370	U	1500	U	350	U
Nitrobenzene	340	U	340	U	350	U	340	U	340	U	360	U	380	U	370	U	1500	U	350	U
Pentachlorophenol	850	U	860	U	890	U	840	U	840	U	900	U	960	U	920	U	3700	U	890	U
Phenanthrene	340	U	340	U	350	U	340	U	340	U	360	U	380	U	370	U	900	J	350	U
Phenol	340	U	340	U	350	U	340	U	340	U	360	U	380	U	370	U	1500	U	350	U
Pyrene	340	U	340	U	350	U	340	U	340	U	360	U	380	U	370	U	3900		350	U

Identifier	ORS00101		ORS00201		ORS00301		ORS00401		ORS00501		ORS00601		ORS00701		ORS00801		ORS00901		ORS01001	
Collect Date	25-Oct-94		25-Oct-94		25-Oct-94		26-Oct-94		26-Oct-94		27-Oct-94		27-Oct-94		27-Oct-94		27-Oct-94		28-Oct-94	
Pesticides/PCBs, ug/kg																				
2,4,5-T	20	U	10	U	21	U	20	U	10	U	22	U	11	U	11	U	44	U	21	U
2,4-D	200	U	100	U	210	U	200	U	100	U	110	U	57	U	56	U	220	U	110	U
2,4-DB	100	U	52	U	110	U	100	U	51	U	110	U	57	U	56	U	220	U	110	U
2,4-DP (Dichloroprop)	100	U	52	U	110	U	100	U	51	U	110	U	57	U	56	U	220	U	110	U
4,4'-DDD	17	U	3.4	U	3.5	U	3.4	U	3.3	U	7.3	U	7.5	U	3.7	UR	150	U	3.5	U
4,4'-DDE	130		3.4	U	3.5	U	3.4	U	3.3	U	7.3	U	7.5	U	3.7	UR	150	U	3.5	U
4,4'-DDT	62	NJ	3.4	U	3.5	U	3.4	U	3.3	U	7.3	U	7.5	U	3.7	UR	150	U	3.5	U
Aldrin	8.7	U	1.8	U	1.8	U	1.7	U	1.7	U	3.7	U	3.9	U	1.9	UR	76	U	1.8	U
alpha-BHC	8.7	U	1.8	U	1.8	U	1.7	U	1.7	U	3.7	U	3.9	U	1.9	UR	76	U	1.8	U
alpha-Chlordane	20		1.8	U	1.8	U	1.7	U	1.7	U	3.7	U	3.9	U	1.9	UR	41	J	1.8	U
Aroclor-1016	170	U	34	U	35	U	34	U	33	U	73	U	75	U	37	UR	1500	U	35	U
Aroclor-1221	340	U	69	U	71	U	68	U	68	U	150	U	150	U	74	UR	3000	U	71	U
Aroclor-1232	170	U	34	U	35	U	34	U	33	U	73	U	75	U	37	UR	1500	U	35	U
Aroclor-1242	170	U	34	U	35	U	34	U	33	U	73	U	75	U	37	UR	1500	U	35	U
Aroclor-1248	170	U	34	U	35	U	34	U	33	U	73	U	75	U	37	UR	1500	U	35	U
Aroclor-1254	170	U	34	U	35	U	34	U	33	U	73	U	75	U	37	UR	1500	U	35	U
Aroclor-1260	170	U	34	U	35	U	34	U	33	U	99	J	75	U	37	UR	1500	U	35	U
beta-BHC	8.7	U	1.8	U	1.8	U	1.7	U	1.7	U	3.7	U	3.9	U	1.9	UR	76	U	1.8	U
Dalapon	200	U	100	U	210	U	200	U	100	U	220	U	110	U	110	U	440	U	210	U
delta-BHC	8.7	U	1.8	U	1.8	U	1.7	U	1.7	U	3.7	U	3.9	U	1.9	UR	76	U	1.8	U
Dicamba	20	U	10	U	21	U	20	U	10	U	22	U	11	U	11	U	44	U	21	U
Dieldrin	95		3.4	U	3.5	U	3.4	U	3.3	U	7.3	U	7.5	U	3.7	UR	150	U	3.5	U
Dinoseb	20	U	10	U	21	U	20	U	10	U	22	U	11	U	11	U	44	U	21	U
Endosulfan I	8.7	U	1.8	U	1.8	U	1.7	U	1.7	U	3.7	U	3.9	U	1.9	UR	76	U	1.8	U
Endosulfan II	17	U	3.4	U	3.5	U	3.4	U	3.3	U	7.3	U	7.5	U	3.7	UR	150	U	3.5	U
Endosulfan sulfate	17	U	3.4	U	3.5	U	3.4	U	3.3	U	7.3	U	7.5	U	3.7	UR	150	U	3.5	U
Endrin	17	U	3.4	U	3.5	U	3.4	U	3.3	U	7.3	U	7.5	U	3.7	UR	150	U	3.5	U
Endrin aldehyde	17	U	3.4	U	3.5	U	3.4	U	3.3	U	7.3	U	7.5	U	3.7	UR	150	U	3.5	U
Endrin ketone	17	U	3.4	U	3.5	U	3.4	U	3.3	U	7.3	U	7.5	U	3.7	UR	150	U	3.5	U
gamma-BHC (Lindane)	8.7	U	1.8	U	1.8	U	1.7	U	1.7	U	3.7	U	3.9	U	1.9	UR	76	U	1.8	U
gamma-Chlordane	13		1.8	U	1.8	U	1.7	U	1.7	U	3.7	U	3.9	U	1.9	UR	39	NJ	1.8	U
Heptachlor	8.7	U	1.8	U	1.8	U	1.7	U	1.7	U	3.7	U	3.9	U	1.9	UR	76	U	1.8	U
Heptachlor epoxide	8.7	U	1.8	U	1.8	U	1.7	U	1.7	U	3.7	U	3.9	U	1.9	UR	76	U	1.8	U
MCPA	20000	U	10000	U	21000	U	20000	U	20000	U	22000	U	45000	U	5600	U	22000	U	11000	U
MCPP	20000	U	10000	U	21000	U	20000	U	10000	U	22000	U	45000	U	5600	U	22000	U	11000	U
Methoxychlor	87	U	18	U	18	U	17	U	17	U	37	U	39	U	19	UR	760	U	18	U
Silvex (2,4,5-TP)	20	U	10	U	21	U	20	U	10	U	22	U	11	U	11	U	44	U	21	U
Toxaphene	870	U	180	U	180	U	170	U	170	U	370	U	390	U	190	UR	7600	U	180	U

Identifier	ORS01101		ORS01201		ORS01201D		ORS01301		ORS01401		ORS01501		ORS01601	
Collect Date	29-Oct-94		29-Oct-94		29-Oct-94		11-Nov-94		29-Oct-94		28-Oct-94		28-Oct-94	
Inorganics, mg/kg														
Aluminum	1170		828		1080		1640		1470		678		5180	
Antimony	4.9	U	5	U	5.1	U	5.3	U	5.1	U	5.2	U	5.3	U
Arsenic	0.59	B	0.43	J	0.52	B	0.32	U	0.67	B	0.75	B	0.8	B
Barium	1.1	J	4.7	B	4.7	B	10	B	2.7	B	2.7	B	44.3	
Beryllium	0.04	U	0.04	U	0.04	U	0.04	B	0.04	U	0.04	U	0.41	B
Cadmium	0.43	U	0.44	U	0.44	U	0.46	U	0.78	U	1.1	U	0.53	U
Calcium	105	B	4260		3220		103	B	390	B	275	B	6140	
Chromium	1.1	B	2.3		2.4		2.2	B	1.4	B	3.3		9.3	
Cobalt	0.53	U	0.54	U	0.55	U	0.58	U	0.55	U	0.56	U	0.57	U
Copper	0.31	U	1.1	U	0.83	U	0.59	U	1.1	U	3.1	U	1.5	U
Iron	487		314		373		473		152		511		787	
Lead	1.2		6.2		6.3		4.4		2.7		23.2		33	
Magnesium	43.7	J	80	B	77.2	B	38.5	J	48.1	J	34.2	J	213	B
Manganese	1.4	B	3.2		3.4		1.8	B	1.3	B	2.7	B	14.8	
Mercury	0.03	U	0.02	U	0.04	U	0.04	U	0.03	U	0.08		0.04	U
Nickel	1.9	U	1.9	U	1.9	U	2	U	1.9	U	2	U	2	U
Potassium	69.6	U	70.8	U	71.1	U	79.9	B	71.9	U	73.4	U	105	B
Selenium	0.41	U	0.41	U	0.42	U	0.44	B	0.42	U	0.43	U	0.44	U
Silver	0.45	U	0.46	U	0.46	U	0.49	U	0.47	U	1.3	B	0.49	U
Sodium	6.2	U	6.3	U	6.3	U	6.7	U	6.4	U	7	U	10.9	U
Thallium	0.27	UJ	0.28	UJ	0.28	UJ	0.29	UJ	0.28	UJ	0.29	UJ	0.29	UJ
Vanadium	1.5	B	0.98	B	1.7	B	0.86	B	0.84	B	0.97	B	4.9	B
Zinc	0.97	U	3.5	B	3.7	B	1.6	U	1.8	B	31.5		4	B
Volatile Organics, ug/kg														
1,1,1-Trichloroethane	10	U	10	U	10	U	11	U	11	U	11	U	11	U
1,1,2,2-Tetrachloroethane	10	U	10	U	10	U	11	U	11	U	11	U	11	U
1,1,2-Trichloroethane	10	U	10	U	10	U	11	U	11	U	11	U	11	U
1,1-Dichloroethane	10	U	10	U	10	U	11	U	11	U	11	U	11	U
1,1-Dichloroethene	10	U	10	U	10	U	11	U	11	U	11	U	11	U
1,2-Dichloroethane	10	U	10	U	10	U	11	U	11	U	11	U	11	U
1,2-Dichloroethene (total)	10	U	10	U	10	U	11	U	11	U	11	U	11	U
1,2-Dichloropropane	10	U	10	U	10	U	11	U	11	U	11	U	11	U
2-Butanone	10	U	10	U	10	U	11	U	11	U	11	U	11	U
2-Hexanone	10	U	10	U	10	U	11	U	11	U	11	U	11	U
4-Methyl-2-pentanone	10	U	10	U	10	U	11	U	11	U	11	U	11	U
Acetone	10	U	10	U	10	U	11	U	11	U	11	U	11	U
Benzene	10	U	10	U	10	U	11	U	11	U	11	U	11	U
Bromodichloromethane	10	U	10	U	10	U	11	U	11	U	11	U	11	U
Bromoform	10	U	10	U	10	U	11	U	11	U	11	U	11	U

Identifier	ORS01101		ORS01201		ORS01201D		ORS01301		ORS01401		ORS01501		ORS01601	
Collect Date	29-Oct-94		29-Oct-94		29-Oct-94		11-Nov-94		29-Oct-94		28-Oct-94		28-Oct-94	
Bromomethane	10	U	10	U	10	U	11	U	11	U	11	U	11	U
Carbon disulfide	10	U	10	U	10	U	11	U	11	U	11	U	11	U
Carbon tetrachloride	10	U	10	U	10	U	11	U	11	U	11	U	11	U
Chlorobenzene	10	U	10	U	10	U	11	U	11	U	11	U	11	U
Chloroethane	10	U	10	U	10	U	11	U	11	U	11	U	11	U
Chloroform	10	U	10	U	10	U	11	U	11	U	11	U	11	U
Chloromethane	10	U	10	U	10	U	11	U	11	U	11	U	11	U
cis-1,3-Dichloropropene	10	U	10	U	10	U	11	U	11	U	11	U	11	U
Dibromochloromethane	10	U	10	U	10	U	11	U	11	U	11	U	11	U
Ethylbenzene	10	U	10	U	10	U	11	U	11	U	11	U	11	U
Methylene chloride	10	U	10	U	10	U	11	U	11	U	11	U	11	U
Styrene	10	U	10	U	10	U	11	U	11	U	11	U	11	U
Tetrachloroethene	10	U	10	U	10	U	11	U	11	U	11	U	11	U
Toluene	4	J	10	U	2	J	11	UJ	11	U	2	J	11	U
trans-1,3-Dichloropropene	10	U	10	U	10	U	11	U	11	U	11	U	11	U
Trichloroethene	10	U	10	U	10	U	11	U	11	U	11	U	11	U
Vinyl chloride	10	U	10	U	10	U	11	U	11	U	11	U	11	U
Xylene (total)	10	U	10	U	10	U	11	U	11	U	11	U	11	U
Semivolatile Organics, ug/kg														
1,2,4-Trichlorobenzene	340	U	350	U	350	U	340	U	350	U	360	U	380	U
1,2-Dichlorobenzene	340	U	350	U	350	U	340	U	350	U	360	U	380	U
1,3-Dichlorobenzene	340	U	350	U	350	U	340	U	350	U	360	U	380	U
1,4-Dichlorobenzene	340	U	350	U	350	U	340	U	350	U	360	U	380	U
2,2'-oxybis(1-Chloropropane)	340	U	350	U	350	U	340	U	350	U	360	U	380	U
2,4,5-Trichlorophenol	860	U	870	U	870	U	860	U	890	U	900	U	950	U
2,4,6-Trichlorophenol	340	U	350	U	350	U	340	U	350	U	360	U	380	U
2,4-Dichlorophenol	340	U	350	U	350	U	340	U	350	U	360	U	380	U
2,4-Dimethylphenol	340	U	350	U	350	U	340	U	350	U	360	U	380	U
2,4-Dinitrophenol	860	U	870	U	870	U	860	U	890	U	900	U	950	U
2,4-Dinitrotoluene	340	U	350	U	350	U	340	U	350	U	360	U	380	U
2,6-Dinitrotoluene	340	U	350	U	350	U	340	U	350	U	360	U	380	U
2-Chloronaphthalene	340	U	350	U	350	U	340	U	350	U	360	U	380	U
2-Chlorophenol	340	U	350	U	350	U	340	U	350	U	360	U	380	U
2-Methylnaphthalene	340	U	350	U	350	U	340	U	350	U	360	U	380	U
2-Methylphenol	340	U	350	U	350	U	340	U	350	U	360	U	380	U
2-Nitroaniline	860	U	870	U	870	U	860	U	890	U	900	U	950	U
2-Nitrophenol	340	U	350	U	350	U	340	U	350	U	360	U	380	U
3,3'-Dichlorobenzidine	340	U	350	U	350	U	340	U	350	U	360	U	380	U
3-Nitroaniline	860	U	870	U	870	U	860	U	890	U	900	U	950	U
4,6-Dinitro-2-methylphenol	860	U	870	U	870	U	860	U	890	U	900	U	950	U
4-Bromophenyl-phenylether	340	U	350	U	350	U	340	U	350	U	360	U	380	U

Identifier	ORS01101		ORS01201		ORS01201D		ORS01301		ORS01401		ORS01501		ORS01601	
Collect Date	29-Oct-94		29-Oct-94		29-Oct-94		11-Nov-94		29-Oct-94		28-Oct-94		28-Oct-94	
4-Chloro-3-methylphenol	340	U	350	U	350	U	340	U	350	U	360	U	380	U
4-Chloroaniline	340	U	350	U	350	U	340	U	350	U	360	U	380	U
4-Chlorophenyl-phenylether	340	U	350	U	350	U	340	U	350	U	360	U	380	U
4-Methylphenol	340	U	350	U	350	U	340	U	350	U	360	U	380	U
4-Nitroaniline	860	U	870	U	870	U	860	U	890	U	900	U	950	U
4-Nitrophenol	860	U	870	U	870	U	860	U	890	U	900	U	950	U
Acenaphthene	340	U	350	U	350	U	340	U	350	U	360	U	260	J
Acenaphthylene	340	U	350	U	350	U	340	U	350	U	360	U	380	U
Anthracene	340	U	350	U	350	U	340	U	350	U	360	U	600	
Benzo(a)anthracene	340	U	350	U	350	U	340	U	350	U	360	U	7300	D
Benzo(a)pyrene	340	U	350	U	350	U	340	U	350	U	360	U	8200	D
Benzo(b)fluoranthene	340	U	350	U	350	U	340	U	350	U	360	U	8200	D
Benzo(g,h,i)perylene	340	U	350	U	350	U	340	U	350	U	360	U	5700	D
Benzo(k)fluoranthene	340	U	350	U	350	U	340	U	350	U	360	U	8300	D
bis(2-Chloroethoxy)methane	340	U	350	U	350	U	340	U	350	U	360	U	380	U
bis(2-Chloroethyl)ether	340	U	350	U	350	U	340	U	350	U	360	U	380	U
bis(2-Ethylhexyl)phthalate	340	U	350	U	350	U	340	U	350	U	360	U	380	U
Butylbenzylphthalate	340	U	350	U	350	U	340	U	350	U	360	U	380	U
Carbazole	340	U	350	U	350	U	340	U	350	U	360	U	340	J
Chrysene	340	U	350	U	350	U	340	U	350	U	360	U	8300	D
Di-n-butylphthalate	340	U	350	U	350	U	340	U	350	U	360	U	380	U
Di-n-octylphthalate	340	U	350	U	350	U	340	U	350	U	360	U	380	U
Dibenz(a,h)anthracene	340	U	350	U	350	U	340	U	350	U	360	U	2400	
Dibenzofuran	340	U	350	U	350	U	340	U	350	U	360	U	380	U
Diethylphthalate	340	U	350	U	350	U	340	U	350	U	360	U	380	U
Dimethylphthalate	340	U	350	U	350	U	340	U	350	U	360	U	380	U
Fluoranthene	340	U	350	U	350	U	340	U	350	U	360	U	14000	D
Fluorene	340	U	350	U	350	U	340	U	350	U	360	U	190	J
Hexachlorobenzene	340	U	350	U	350	U	340	U	350	U	360	U	380	U
Hexachlorobutadiene	340	U	350	U	350	U	340	U	350	U	360	U	380	U
Hexachlorocyclopentadiene	340	U	350	U	350	U	340	U	350	U	360	U	380	U
Hexachloroethane	340	U	350	U	350	U	340	U	350	U	360	U	380	U
Indeno(1,2,3-cd)pyrene	340	U	350	U	350	U	340	U	350	U	360	U	5800	D
Isophorone	340	U	350	U	350	U	340	U	350	U	360	U	380	U
N-Nitroso-di-n-propylamine	340	U	350	U	350	U	340	U	350	U	360	U	380	U
N-Nitrosodiphenylamine (1)	340	U	350	U	350	U	340	U	350	U	360	U	380	U
Naphthalene	340	U	350	U	350	U	340	U	350	U	360	U	380	U
Nitrobenzene	340	U	350	U	350	U	340	U	350	U	360	U	380	U
Pentachlorophenol	860	U	870	U	870	U	860	U	890	U	900	U	950	U
Phenanthrene	340	U	350	U	350	U	340	U	350	U	360	U	2100	
Phenol	340	U	350	U	350	U	340	U	350	U	360	U	380	U
Pyrene	340	U	350	U	350	U	340	U	350	U	360	U	11000	D

Identifier	ORS01101		ORS01201		ORS01201D		ORS01301		ORS01401		ORS01501		ORS01601	
Collect Date	29-Oct-94		29-Oct-94		29-Oct-94		11-Nov-94		29-Oct-94		28-Oct-94		28-Oct-94	
Pesticides/PCBs, ug/kg														
2,4,5-T	20	U	11	U	11	U	21	U	11	U	11	U	22	U
2,4-D	100	U	53	U	53	U	100	U	53	U	54	U	110	U
2,4-DB	100	U	53	U	53	U	100	U	53	U	54	U	110	U
2,4-DP (Dichloroprop)	100	U	53	U	53	U	100	U	53	U	54	U	110	U
4,4'-DDD	3.4	U	3.5	U	3.5	U	3.4	U	3.5	U	3.6	U	180	U
4,4'-DDE	3.4	U	12		11		3.4	U	3.5	U	3.9		180	U
4,4'-DDT	3.4	U	11	J	10		3.4	U	3.5	U	8.1	J	180	U
Aldrin	1.7	U	1.8	U	1.8	U	1.8	U	1.8	U	1.8	U	94	U
alpha-BHC	1.7	U	1.8	U	1.8	U	1.8	U	1.8	U	1.8	U	94	U
alpha-Chlordane	1.7	U	2.1		1.6	J	1.8	U	1.8	U	0.6	J	94	U
Aroclor-1016	34	U	35	U	35	U	34	U	35	U	36	U	1800	U
Aroclor-1221	68	U	71	U	71	U	69	U	71	U	73	U	3700	U
Aroclor-1232	34	U	35	U	35	U	34	U	35	U	36	U	1800	U
Aroclor-1242	34	U	35	U	35	U	34	U	35	U	36	U	1800	U
Aroclor-1248	34	U	35	U	35	U	34	U	35	U	36	U	1800	U
Aroclor-1254	34	U	35	U	35	U	34	U	35	U	36	U	1800	U
Aroclor-1260	34	U	35	U	35	U	34	U	35	U	36	U	1800	U
beta-BHC	1.7	U	1.8	U	1.8	U	1.8	U	1.8	U	1.8	U	94	U
Dalapon	200	U	110	U	110	U	210	U	110	U	110	U	220	U
delta-BHC	1.7	U	1.8	U	1.8	U	1.8	U	1.8	U	1.8	U	94	U
Dicamba	20	U	11	U	11	U	21	U	11	U	11	U	22	U
Dieldrin	3.4	U	3.5	U	3.5	U	3.4	U	3.5	U	3.6	U	180	U
Dinoseb	20	U	11	U	11	U	21	U	11	U	11	U	22	U
Endosulfan I	1.7	U	1.8	U	1.8	U	1.8	U	1.8	U	1.8	U	94	U
Endosulfan II	3.4	U	3.5	U	3.5	U	3.4	U	3.5	U	3.6	U	180	U
Endosulfan sulfate	3.4	U	3.5	U	3.5	U	3.4	U	3.5	U	3.6	U	180	U
Endrin	3.4	U	3.5	U	3.5	U	3.4	U	3.5	U	3.6	U	180	U
Endrin aldehyde	3.4	U	3.5	U	3.5	U	3.4	U	3.5	U	3.6	U	180	U
Endrin ketone	3.4	U	3.5	U	3.5	U	3.4	U	3.5	U	3.6	U	180	U
gamma-BHC (Lindane)	1.7	U	1.8	U	1.8	U	1.8	U	1.8	U	1.8	U	94	U
gamma-Chlordane	1.7	U	1.9	J	1.4	NJ	1.8	U	1.8	U	0.84	NJ	94	U
Heptachlor	1.7	U	1.8	U	1.8	U	1.8	U	1.8	U	1.8	U	94	U
Heptachlor epoxide	1.7	U	1.8	U	1.8	U	1.8	U	1.8	U	1.8	U	94	U
MCPA	10000	U	5300	U	5300	U	10000	U	5300	U	5400	U	11000	U
MCPP	10000	U	5300	U	5300	U	10000	U	5300	U	5400	U	11000	U
Methoxychlor	17	U	18	U	18	U	18	U	18	U	18	U	940	U
Silvex (2,4,5-TP)	20	U	11	U	11	U	21	U	11	U	11	U	22	U
Toxaphene	170	U	180	U	180	U	180	U	180	U	180	U	9400	U

Identifier	ORB00101		ORB00201		ORB00301		ORB00401		ORB00501		ORB00601		ORB00601D		ORB00701		ORB00801		ORB00901	
Collect Date	25-Oct-94		25-Oct-94		25-Oct-94		26-Oct-94		26-Oct-94		27-Oct-94		27-Oct-94		27-Oct-94		27-Oct-94		27-Oct-94	
Inorganics, mg/kg																				
Aluminum	12.2	U	3110		3010		357		11.7	U	10300		10800		1620		2340		379	
Antimony	5.8	U	5.1	U	5.8	U	5.8	U	5.5	U	5.7	U	5.7	U	5.8	U	5.9	U	5.5	U
Arsenic	0.45	U	0.6	B	0.75	B	0.45	U	0.43	UJ	1.3	B	1.5	B	0.68	B	0.52	B	1	J
Barium	0.15	U	1.6	B	2.8	B	0.95	B	0.12	U	7.6	B	11.7	B	1.1	B	0.8	B	1	B
Beryllium	0.05	U	0.04	U	0.05	U	0.05	U	0.05	U	0.1	B	0.1	B	0.05	U	0.11	B	0.05	U
Cadmium	0.51	U	0.44	U	0.51	U	0.5	U	0.48	U	0.5	U	0.5	U	0.5	U	0.51	U	0.48	U
Calcium	83.4	B	141	B	80.6	B	41.7	J	8.1	J	19.8	J	26.3	J	109	B	865	B	27.1	J
Chromium	0.46	U	3.7		6.2		1.8	B	0.46	B	8.7		8.3		2.2	B	5.8		1	B
Cobalt	0.63	U	0.55	U	0.63	U	0.78	B	0.6	U	0.67	B	0.64	B	0.62	U	0.7	B	0.59	U
Copper	0.45	U	0.35	U	0.36	U	0.36	U	0.35	U	0.35	U	0.36	U	0.36	U	1.4	B	0.34	U
Iron	39.9	J	239	J	368	J	88.9	J	3.8	J	270	J	314	J	317	J	35.1	J	1810	J
Lead	0.35	J	1.7	J	8.5	J	0.96	J	0.19	U	5.2	J	6.6	J	0.89	J	3.5	J	0.41	J
Magnesium	6.4	B	33.7	B	11.8	B	4.5	U	4.3	U	20.2	B	25.4	B	9.5	B	4.9	B	4.8	B
Manganese	0.53	B	0.85	B	0.49	B	1.7	B	0.16	U	0.3	B	0.4	B	0.37	B	0.17	U	0.3	B
Mercury	0.01	U	0.01	U	0.01	U	0.01	U	0.01	U	0.07		0.07		0.02	B	0.05		0.01	U
Nickel	2.2	U	1.9	U	2.2	U	2.2	U	2.1	U	7.4	B	7.2	B	2.2	U	2.2	U	2.1	U
Potassium	81.7	U	71.5	U	81.8	U	81.3	U	78	U	80	U	80.2	U	81.1	U	83	U	77.5	U
Selenium	0.8	J	0.55	J	0.53	B	0.47	U	0.45	U	0.64	J	0.9	J	0.5	B	0.48	UJ	0.45	UJ
Silver	0.53	U	0.46	U	0.53	U	0.53	U	0.51	U	0.52	U	0.52	U	0.53	B	0.54	U	0.5	U
Sodium	7.3	U	6.4	U	7.3	U	7.2	U	7	U	7.1	U	7.1	U	7.2	U	7.4	U	6.9	U
Thallium	0.31	U	0.27	U	0.31	U	0.31	U	0.3	U	0.31	U	0.31	U	0.31	U	0.32	U	0.3	UJ
Vanadium	0.6	U	1.7	B	2.8	B	0.6	U	0.58	U	4.7	B	5.1	B	2.1	B	4.7	B	0.74	B
Zinc	0.27	U	0.49	B	0.27	U	0.26	U	0.25	U	0.33	B	0.26	U	0.26	U	0.27	U	0.25	U
Volatile Organics, ug/kg																				
1,1,1-Trichloroethane	25	U	10	U	12	U	12	U	11	U	12	U	12	U	12	U	12	U	11	U
1,1,2,2-Tetrachloroethane	25	U	10	U	12	U	12	U	11	U	12	U	12	U	12	U	12	U	11	U
1,1,2-Trichloroethane	25	U	10	U	12	U	12	U	11	U	12	U	12	U	12	U	12	U	11	U
1,1-Dichloroethane	25	U	10	U	12	U	12	U	11	U	12	U	12	U	12	U	12	U	11	U
1,1-Dichloroethene	25	U	10	U	12	U	12	U	11	U	12	U	12	U	12	U	12	U	11	U
1,2-Dichloroethane	25	U	10	U	12	U	12	U	11	U	12	U	12	U	12	U	12	U	11	U
1,2-Dichloroethene (total)	25	U	10	U	12	U	12	U	11	U	12	U	12	U	12	U	12	U	11	U
1,2-Dichloropropane	25	U	10	U	12	U	12	U	11	U	12	U	12	U	12	U	12	U	11	U
2-Butanone	25	U	10	U	12	U	12	U	11	U	12	U	12	U	12	U	12	U	11	U
2-Hexanone	25	U	10	U	12	U	12	U	11	U	12	U	12	U	12	U	12	U	11	U
4-Methyl-2-pentanone	25	U	10	U	12	U	12	U	11	U	12	U	12	U	12	U	12	U	11	U
Acetone	25	U	10	U	16	U	12	U	11	U	12	U	12	U	12	U	12	U	11	U
Benzene	25	U	10	U	12	U	12	U	11	U	12	U	12	U	12	U	12	U	11	U
Bromodichloromethane	25	U	10	U	12	U	12	U	11	U	12	U	12	U	12	U	12	U	11	U
Bromoform	25	U	10	U	12	U	12	U	11	U	12	U	12	U	12	U	12	U	11	U

Identifier	ORB00101		ORB00201		ORB00301		ORB00401		ORB00501		ORB00601		ORB00601D		ORB00701		ORB00801		ORB00901	
Collect Date	25-Oct-94		25-Oct-94		25-Oct-94		26-Oct-94		26-Oct-94		27-Oct-94		27-Oct-94		27-Oct-94		27-Oct-94		27-Oct-94	
Bromomethane	25	U	10	U	12	U	12	U	11	U	12	U	12	U	12	U	12	U	11	U
Carbon disulfide	25	U	10	U	12	U	12	U	11	U	12	U	12	U	12	U	12	U	11	U
Carbon tetrachloride	25	U	10	U	12	U	12	U	11	U	12	U	12	U	12	U	12	U	11	U
Chlorobenzene	25	U	10	U	12	U	12	U	11	U	12	U	12	U	12	U	12	U	11	U
Chloroethane	25	U	10	U	12	U	12	U	11	U	12	U	12	U	12	U	12	U	11	U
Chloroform	25	U	10	U	12	U	12	U	11	U	12	U	12	U	12	U	12	U	11	U
Chloromethane	25	U	10	U	12	U	12	U	11	U	12	U	12	U	12	U	12	U	11	U
cis-1,3-Dichloropropene	25	U	10	U	12	U	12	U	11	U	12	U	12	U	12	U	12	U	11	U
Dibromochloromethane	25	U	10	U	12	U	12	U	11	U	12	U	12	U	12	U	12	U	11	U
Ethylbenzene	25	U	10	U	12	U	12	U	11	U	12	U	12	U	12	U	12	U	11	U
Methylene chloride	25	U	10	U	12	U	12	U	11	U	12	U	12	U	12	U	12	U	11	U
Styrene	25	U	10	U	12	U	12	U	11	U	12	U	12	U	12	U	12	U	11	U
Tetrachloroethene	25	U	10	U	12	U	12	U	11	U	12	U	12	U	12	U	12	U	11	U
Toluene	25	U	10	U	12	U	12	U	11	U	12	U	12	U	12	U	12	U	11	U
trans-1,3-Dichloropropene	25	U	10	U	12	U	12	U	11	U	12	U	12	U	12	U	12	U	11	U
Trichloroethene	25	U	10	U	12	U	12	U	11	U	12	U	12	U	12	U	12	U	11	U
Vinyl chloride	25	U	10	U	12	U	12	U	11	U	12	U	12	U	12	U	12	U	11	U
Xylene (total)	25	U	10	U	12	U	12	U	11	U	12	U	12	U	12	U	12	U	11	U
Semivolatile Organics, ug/kg																				
1,2,4-Trichlorobenzene	400	U	350	U	400	U	400	U	380	U	400	U	390	U	400	U	400	U	380	U
1,2-Dichlorobenzene	400	U	350	U	400	U	400	U	380	U	400	U	390	U	400	U	400	U	380	U
1,3-Dichlorobenzene	400	U	350	U	400	U	400	U	380	U	400	U	390	U	400	U	400	U	380	U
1,4-Dichlorobenzene	400	U	350	U	400	U	400	U	380	U	400	U	390	U	400	U	400	U	380	U
2,2'-oxybis(1-Chloropropane)	400	U	350	U	400	U	400	U	380	U	400	U	390	U	400	U	400	U	380	U
2,4,5-Trichlorophenol	1000	U	880	U	1000	U	1000	U	960	U	990	U	980	U	990	U	990	U	950	U
2,4,6-Trichlorophenol	400	U	350	U	400	U	400	U	380	U	400	U	390	U	400	U	400	U	380	U
2,4-Dichlorophenol	400	U	350	U	400	U	400	U	380	U	400	U	390	U	400	U	400	U	380	U
2,4-Dimethylphenol	400	U	350	U	400	U	400	U	380	U	400	U	390	U	400	U	400	U	380	U
2,4-Dinitrophenol	1000	U	880	U	1000	U	1000	U	960	U	990	U	980	U	990	U	990	U	950	U
2,4-Dinitrotoluene	400	U	350	U	400	U	400	U	380	U	400	U	390	U	400	U	400	U	380	U
2,6-Dinitrotoluene	400	U	350	U	400	U	400	U	380	U	400	U	390	U	400	U	400	U	380	U
2-Chloronaphthalene	400	U	350	U	400	U	400	U	380	U	400	U	390	U	400	U	400	U	380	U
2-Chlorophenol	400	U	350	U	400	U	400	U	380	U	400	U	390	U	400	U	400	U	380	U
2-Methylnaphthalene	400	U	350	U	400	U	400	U	380	U	400	U	390	U	400	U	400	U	380	U
2-Methylphenol	400	U	350	U	400	U	400	U	380	U	400	U	390	U	400	U	400	U	380	U
2-Nitroaniline	1000	U	880	U	1000	U	1000	U	960	U	990	U	980	U	990	U	990	U	950	U
2-Nitrophenol	400	U	350	U	400	U	400	U	380	U	400	U	390	U	400	U	400	U	380	U
3,3'-Dichlorobenzidine	400	U	350	U	400	U	400	U	380	U	400	U	390	U	400	U	400	U	380	U
3-Nitroaniline	1000	U	880	U	1000	U	1000	U	960	U	990	U	980	U	990	U	990	U	950	U
4,6-Dinitro-2-methylphenol	1000	U	880	U	1000	U	1000	U	960	U	990	U	980	U	990	U	990	U	950	U
4-Bromophenyl-phenylether	400	U	350	U	400	U	400	U	380	U	400	U	390	U	400	U	400	U	380	U

Identifier	ORB00101		ORB00201		ORB00301		ORB00401		ORB00501		ORB00601		ORB00601D		ORB00701		ORB00801		ORB00901	
Collect Date	25-Oct-94		25-Oct-94		25-Oct-94		26-Oct-94		26-Oct-94		27-Oct-94		27-Oct-94		27-Oct-94		27-Oct-94		27-Oct-94	
4-Chloro-3-methylphenol	400	U	350	U	400	U	400	U	380	U	400	U	390	U	400	U	400	U	380	U
4-Chloroaniline	400	U	350	U	400	U	400	U	380	U	400	U	390	U	400	U	400	U	380	U
4-Chlorophenyl-phenylether	400	U	350	U	400	U	400	U	380	U	400	U	390	U	400	U	400	U	380	U
4-Methylphenol	400	U	350	U	400	U	400	U	380	U	400	U	390	U	400	U	400	U	380	U
4-Nitroaniline	1000	U	880	U	1000	U	1000	U	960	U	990	U	980	U	990	U	990	U	950	U
4-Nitrophenol	1000	U	880	U	1000	U	1000	U	960	U	990	U	980	U	990	U	990	U	950	U
Acenaphthene	400	U	350	U	400	U	400	U	380	U	400	U	390	U	400	U	400	U	380	U
Acenaphthylene	400	U	350	U	400	U	400	U	380	U	400	U	390	U	400	U	400	U	380	U
Anthracene	400	U	350	U	400	U	400	U	380	U	400	U	390	U	400	U	400	U	380	U
Benzo(a)anthracene	400	U	350	U	400	U	400	U	380	U	400	U	390	U	400	U	400	U	380	U
Benzo(a)pyrene	400	U	350	U	400	U	400	U	380	U	400	U	390	U	400	U	400	U	380	U
Benzo(b)fluoranthene	400	U	350	U	400	U	400	U	380	U	400	U	390	U	400	U	400	U	380	U
Benzo(g,h,i)perylene	400	U	350	U	400	U	400	U	380	U	400	U	98	J	400	U	400	U	380	U
Benzo(k)fluoranthene	400	U	350	U	400	U	400	U	380	U	400	U	390	U	400	U	400	U	380	U
bis(2-Chloroethoxy)methane	400	U	350	U	400	U	400	U	380	U	400	U	390	U	400	U	400	U	380	U
bis(2-Chloroethyl)ether	400	U	350	U	400	U	400	U	380	U	400	U	390	U	400	U	400	U	380	U
bis(2-Ethylhexyl)phthalate	400	U	350	U	400	U	390	J	380	U	400	U	390	U	400	U	400	U	380	U
Butylbenzylphthalate	400	U	350	U	400	U	400	U	380	U	400	U	390	U	400	U	400	U	380	U
Carbazole	400	U	350	U	400	U	400	U	380	U	400	U	390	U	400	U	400	U	380	U
Chrysene	400	U	350	U	400	U	400	U	380	U	400	U	390	U	400	U	400	U	380	U
Di-n-butylphthalate	470		420		530		700		680		1500	U	390	U	800	U	400	U	380	U
Di-n-octylphthalate	170	J	350	U	400	U	400	U	380	U	400	U	390	U	400	U	230	J	380	U
Dibenz(a,h)anthracene	400	U	350	U	400	U	400	U	380	U	400	U	390	U	400	U	400	U	380	U
Dibenzofuran	400	U	350	U	400	U	400	U	380	U	400	U	390	U	400	U	400	U	380	U
Diethylphthalate	400	U	350	U	400	U	400	U	380	U	400	U	390	U	400	U	400	U	380	U
Dimethylphthalate	400	U	350	U	400	U	400	U	380	U	400	U	390	U	400	U	400	U	380	U
Fluoranthene	400	U	350	U	400	U	400	U	380	U	400	U	390	U	400	U	400	U	380	U
Fluorene	400	U	350	U	400	U	400	U	380	U	400	U	390	U	400	U	400	U	380	U
Hexachlorobenzene	400	U	350	U	400	U	400	U	380	U	400	U	390	U	400	U	400	U	380	U
Hexachlorobutadiene	400	U	350	U	400	U	400	U	380	U	400	U	390	U	400	U	400	U	380	U
Hexachlorocyclopentadiene	400	U	350	U	400	U	400	U	380	U	400	U	390	U	400	U	400	U	380	U
Hexachloroethane	400	U	350	U	400	U	400	U	380	U	400	U	390	U	400	U	400	U	380	U
Indeno(1,2,3-cd)pyrene	400	U	350	U	400	U	400	U	380	U	400	U	390	U	400	U	400	U	380	U
Isophorone	400	U	350	U	400	U	400	U	380	U	400	U	390	U	400	U	400	U	380	U
N-Nitroso-di-n-propylamine	400	U	350	U	400	U	400	U	380	U	400	U	390	U	400	U	400	U	380	U
N-Nitrosodiphenylamine (1)	400	U	350	U	400	U	400	U	380	U	400	U	390	U	400	U	400	U	380	U
Naphthalene	400	U	350	U	400	U	400	U	380	U	400	U	390	U	400	U	400	U	380	U
Nitrobenzene	400	U	350	U	400	U	400	U	380	U	400	U	390	U	400	U	400	U	380	U
Pentachlorophenol	1000	U	880	U	1000	U	1000	U	960	U	990	U	980	U	990	U	990	U	950	U
Phenanthrene	400	U	350	U	400	U	400	U	380	U	400	U	390	U	400	U	400	U	380	U
Phenol	400	U	350	U	400	U	400	U	380	U	400	U	390	U	400	U	400	U	380	U
Pyrene	400	U	350	U	400	U	400	U	380	U	400	U	390	U	400	U	400	U	380	U

Identifier	ORB00101		ORB00201		ORB00301		ORB00401		ORB00501		ORB00601		ORB00601D		ORB00701		ORB00801		ORB00901	
Collect Date	25-Oct-94		25-Oct-94		25-Oct-94		26-Oct-94		26-Oct-94		27-Oct-94		27-Oct-94		27-Oct-94		27-Oct-94		27-Oct-94	
Pesticides/PCBs, ug/kg																				
2,4,5-T	12	U	11	U	12	U	12	U	12	U	12	U	24	U	24	U	12	U	12	U
2,4-D	61	U	53	U	58	U	60	U	58	U	60	U	120	U	180	U	60	U	58	U
2,4-DB	61	U	53	U	58	U	60	U	58	U	60	U	120	U	120	U	60	U	58	U
2,4-DP (Dichloroprop)	61	U	53	U	58	U	60	U	58	U	60	U	120	U	120	U	60	U	58	U
4,4'-DDD	4	U	3.5	U	3.8	U	3.9	U	3.8	U	3.9	U	3.9	U	3.9	U	4	UR	3.8	UJ
4,4'-DDE	4	U	3.5	U	3.8	U	3.9	U	3.8	U	3.9	U	3.9	U	3.9	U	4	UR	3.8	UJ
4,4'-DDT	4	U	3.5	U	3.8	U	3.9	U	3.8	U	3.9	U	3.9	U	3.9	U	4	UR	3.8	UJ
Aldrin	2.1	U	1.8	U	2	U	2	U	2	U	2	U	2	U	2	U	2	UR	2	UJ
alpha-BHC	2.1	U	1.8	U	2	U	2	U	2	U	2	U	2	U	2	U	2	UR	2	UJ
alpha-Chlordane	2.1	U	1.8	U	2	U	2	U	2	U	2	U	2	U	2	U	2	UR	2	UJ
Aroclor-1016	40	U	35	U	38	U	39	U	38	U	39	U	39	U	39	U	40	UR	38	UJ
Aroclor-1221	82	U	71	U	78	U	80	U	78	U	80	U	79	U	80	U	81	UR	78	UJ
Aroclor-1232	40	U	35	U	38	U	39	U	38	U	39	U	39	U	39	U	40	UR	38	UJ
Aroclor-1242	40	U	35	U	38	U	39	U	38	U	39	U	39	U	39	U	40	UR	38	UJ
Aroclor-1248	40	U	35	U	38	U	39	U	38	U	39	U	39	U	39	U	40	UR	38	UJ
Aroclor-1254	40	U	35	U	38	U	39	U	38	U	39	U	39	U	39	U	40	UR	38	UJ
Aroclor-1260	40	U	35	U	38	U	39	U	38	U	39	U	39	U	39	U	40	UR	38	UJ
beta-BHC	2.1	U	1.8	U	2	U	2	U	2	U	2	U	2	U	2	U	2	UR	2	UJ
Dalapon	120	U	110	U	120	U	120	U	120	U	120	U	240	U	240	U	120	U	120	U
delta-BHC	2.1	U	1.8	U	2	U	2	U	2	U	2	U	2	U	2	U	2	UR	2	UJ
Dicamba	12	U	11	U	12	U	12	U	12	U	12	U	24	U	24	U	12	U	12	U
Dieldrin	4	U	3.5	U	3.8	U	3.9	U	3.8	U	3.9	U	3.9	U	3.9	U	4	UR	3.8	UJ
Dinoseb	12	U	11	U	12	U	12	U	12	U	12	U	24	U	24	U	12	U	12	U
Endosulfan I	2.1	U	1.8	U	2	U	2	U	2	U	2	U	2	U	2	U	2	UR	2	UJ
Endosulfan II	4	U	3.5	U	3.8	U	3.9	U	3.8	U	3.9	U	3.9	U	3.9	U	4	UR	3.8	UJ
Endosulfan sulfate	4	U	3.5	U	3.8	U	3.9	U	3.8	U	3.9	U	3.9	U	3.9	U	4	UR	3.8	UJ
Endrin	4	U	3.5	U	3.8	U	3.9	U	3.8	U	3.9	U	3.9	U	3.9	U	4	UR	3.8	UJ
Endrin aldehyde	4	U	3.5	U	3.8	U	3.9	U	3.8	U	3.9	U	3.9	U	3.9	U	4	UR	3.8	UJ
Endrin ketone	4	U	3.5	U	3.8	U	3.9	U	3.8	U	3.9	U	3.9	U	3.9	U	4	UR	3.8	UJ
gamma-BHC (Lindane)	2.1	U	1.8	U	2	U	2	U	2	U	2	U	2	U	2	U	2	UR	2	UJ
gamma-Chlordane	2.1	U	1.8	U	2	U	2	U	2	U	2	U	2	U	2	U	2	UR	2	UJ
Heptachlor	2.1	U	1.8	U	2	U	2	U	2	U	2	U	2	U	2	U	2	UR	2	UJ
Heptachlor epoxide	2.1	U	1.8	U	2	U	2	U	2	U	2	U	2	U	2	U	2	UR	2	UJ
MCPA	6100	U	5300	U	12000	U	6000	U	5800	U	6000	U	12000	U	48000	U	12000	U	5800	U
MCPP	6100	U	5300	U	12000	U	6000	U	5800	U	6000	U	12000	U	48000	U	12000	U	5800	U
Methoxychlor	21	U	18	U	20	U	20	U	20	U	20	U	20	U	20	U	20	UR	20	UJ
Silvex (2,4,5-TP)	12	U	11	U	12	U	12	U	12	U	12	U	24	U	24	U	12	U	12	U
Toxaphene	210	U	180	U	200	U	200	U	200	U	200	U	200	U	200	U	200	UR	200	UJ

Identifier	ORB01001		ORB01001D		ORB01101		ORB01201		ORB01301		ORB01401		ORB01401D		ORB01501		ORB01601	
Collect Date	28-Oct-94		28-Oct-94		29-Oct-94		29-Oct-94		11-Nov-94		29-Oct-94		29-Oct-94		28-Oct-94		28-Oct-94	
Inorganics, mg/kg																		
Aluminum	8870		8410		525		42.8		1500		370		443		179		1800	
Antimony	5.8	U	5.8	U	5.6	U	4.9	U	4.9	U	5.4	U	5.4	U	5.4	U	6	U
Arsenic	1.5	B	1.1	B	0.78	B	0.3	U	0.3	U	0.33	UJ	0.37	B	0.37	J	0.39	B
Barium	10.1	B	10.9	B	0.48	J	0.48	J	8.7	B	0.33	J	0.51	J	0.55	J	2	B
Beryllium	0.06	B	0.08	B	0.05	U	0.04	U	0.04	U	0.04	U	0.04	U	0.05	U	0.05	U
Cadmium	0.51	U	0.63	U	0.86	U	0.43	U	0.43	U	0.89	U	0.51	U	0.47	U	0.76	U
Calcium	67	J	66.9	J	34.3	J	90.4	B	42	J	24.5	J	27.1	J	59.3	J	102	B
Chromium	8.5		8.6		1.2	B	0.52	B	1.6	B	0.84	B	1.1	B	0.92	B	2.2	B
Cobalt	0.63	U	0.62	U	0.61	U	0.53	U	0.53	U	0.58	U	0.58	U	0.59	U	0.65	U
Copper	0.46	U	0.36	U	0.76	U	0.42	U	0.31	U	0.34	U	0.34	U	0.65	U	0.38	U
Iron	269		239		111		21.7		400		42.6		58		76.6		63.2	
Lead	4.5		5.1		0.32	B	0.26	U	3.3		0.48	B	0.46	B	1.6		1.7	
Magnesium	39.7	J	31.7	J	25	J	4.5	J	27.6	J	13.8	J	14.5	J	10.2	J	19.4	J
Manganese	0.5	U	0.33	U	0.56	U	0.33	U	1.6	B	0.21	U	0.33	U	0.74	U	0.18	U
Mercury	0.07		0.07		0.01	U	0.02	U	0.03	U	0.01	U	0.02	U	0.02	U	0.06	
Nickel	2.3	B	2.2	U	2.1	U	1.9	U	1.9	U	2	U	2	U	2	U	2.3	U
Potassium	81.8	U	81.5	U	79	U	69.1	U	92.4	B	76.1	U	76.1	U	76.4	U	84.9	U
Selenium	0.48	U	0.48	U	0.46	U	0.4	U	0.41	U	0.45	U	0.45	U	0.45	U	0.5	U
Silver	0.53	U	0.53	U	0.51	U	0.45	U	0.45	U	0.49	U	0.49	U	0.5	U	0.55	U
Sodium	7.3	U	7.3	U	7	U	6.2	U	6.2	U	6.8	U	6.8	U	6.8	U	7.6	U
Thallium	0.32	UJ	0.32	UJ	0.31	UJ	0.27	UJ	0.27	UJ	0.3	UJ	0.3	UJ	0.3	UJ	0.33	UJ
Vanadium	2.5	B	2.6	B	0.58	U	0.51	U	0.66	B	0.56	U	0.56	U	0.56	U	1.2	B
Zinc	0.27	U	0.26	U	0.44	U	0.24	U	0.6	U	0.25	U	0.3	U	5.1		0.28	U
Volatile Organics, ug/kg																		
1,1,1-Trichloroethane	12	U	12	U	11	U	10	U	10	U	11	U	11	U	11	U	12	U
1,1,2,2-Tetrachloroethane	12	U	12	U	11	U	10	U	10	U	11	U	11	U	11	U	12	U
1,1,2-Trichloroethane	12	U	12	U	11	U	10	U	10	U	11	U	11	U	11	U	12	U
1,1-Dichloroethane	12	U	12	U	11	U	10	U	10	U	11	U	11	U	11	U	12	U
1,1-Dichloroethene	12	U	12	U	11	U	10	U	10	U	11	U	11	U	11	U	12	U
1,2-Dichloroethane	12	U	12	U	11	U	10	U	10	U	11	U	11	U	11	U	12	U
1,2-Dichloroethene (total)	12	U	12	U	11	U	10	U	10	U	11	U	11	U	11	U	12	U
1,2-Dichloropropane	12	U	12	U	11	U	10	U	10	U	11	U	11	U	11	U	12	U
2-Butanone	12	U	12	U	11	U	10	U	10	U	11	U	11	U	11	U	12	U
2-Hexanone	12	U	12	U	11	U	10	U	10	U	11	U	11	U	11	U	12	U
4-Methyl-2-pentanone	12	U	12	U	11	U	10	U	10	U	11	U	11	U	11	U	12	U
Acetone	12	U	12	U	11	U	10	U	10	U	11	U	11	U	19	U	12	U
Benzene	12	U	12	U	11	U	10	U	10	U	11	U	11	U	11	U	12	U
Bromodichloromethane	12	U	12	U	11	U	10	U	10	U	11	U	11	U	11	U	12	U
Bromoform	12	U	12	U	11	U	10	U	10	U	11	U	11	U	11	U	12	U

Identifier	ORB01001		ORB01001D		ORB01101		ORB01201		ORB01301		ORB01401		ORB01401D		ORB01501		ORB01601	
Collect Date	28-Oct-94		28-Oct-94		29-Oct-94		29-Oct-94		11-Nov-94		29-Oct-94		29-Oct-94		28-Oct-94		28-Oct-94	
Bromomethane	12	U	12	U	11	U	10	U	10	U	11	U	11	U	11	U	12	U
Carbon disulfide	12	U	12	U	11	U	10	U	10	U	11	U	11	U	11	U	12	U
Carbon tetrachloride	12	U	12	U	11	U	10	U	10	U	11	U	11	U	11	U	12	U
Chlorobenzene	12	U	12	U	11	U	10	U	10	U	11	U	11	U	11	U	12	U
Chloroethane	12	U	12	U	11	U	10	U	10	U	11	U	11	U	11	U	12	U
Chloroform	12	U	12	U	11	U	10	U	10	U	11	U	11	U	11	U	12	U
Chloromethane	12	U	12	U	11	U	10	U	10	U	11	U	11	U	11	U	12	U
cis-1,3-Dichloropropene	12	U	12	U	11	U	10	U	10	U	11	U	11	U	11	U	12	U
Dibromochloromethane	12	U	12	U	11	U	10	U	10	U	11	U	11	U	11	U	12	U
Ethylbenzene	12	U	12	U	11	U	10	U	10	U	11	U	11	U	11	U	12	U
Methylene chloride	12	U	12	U	11	U	10	U	10	U	11	U	11	U	11	U	12	U
Styrene	12	U	12	U	11	U	10	U	10	U	11	U	11	U	11	U	12	U
Tetrachloroethene	12	U	12	U	11	U	10	U	10	U	11	U	11	U	11	U	12	U
Toluene	12	U	12	U	11	U	2	J	5	UJ	11	U	11	U	11	U	12	U
trans-1,3-Dichloropropene	12	U	12	U	11	U	10	U	10	U	11	U	11	U	11	U	12	U
Trichloroethene	12	U	12	U	11	U	10	U	10	U	11	U	11	U	11	U	12	U
Vinyl chloride	12	U	12	U	11	U	10	U	10	U	11	U	11	U	11	U	12	U
Xylene (total)	12	U	12	U	11	U	10	U	10	U	11	U	11	U	11	U	12	U
Semivolatile Organics, ug/k																		
1,2,4-Trichlorobenzene	400	U	400	U	380	U	340	U	340	U	370	U	370	U	370	U	400	U
1,2-Dichlorobenzene	400	U	400	U	380	U	340	U	340	U	370	U	370	U	370	U	400	U
1,3-Dichlorobenzene	400	U	400	U	380	U	340	U	340	U	370	U	370	U	370	U	400	U
1,4-Dichlorobenzene	400	U	400	U	380	U	340	U	340	U	370	U	370	U	370	U	400	U
2,2'-oxybis(1-Chloropropane)	400	U	400	U	380	U	340	U	340	U	370	U	370	U	370	U	400	U
2,4,5-Trichlorophenol	990	U	1000	U	960	U	860	U	850	U	920	U	940	U	940	U	990	U
2,4,6-Trichlorophenol	400	U	400	U	380	U	340	U	340	U	370	U	370	U	370	U	400	U
2,4-Dichlorophenol	400	U	400	U	380	U	340	U	340	U	370	U	370	U	370	U	400	U
2,4-Dimethylphenol	400	U	400	U	380	U	340	U	340	U	370	U	370	U	370	U	400	U
2,4-Dinitrophenol	990	U	1000	U	960	U	860	U	850	U	920	U	940	U	940	U	990	U
2,4-Dinitrotoluene	400	U	400	U	380	U	340	U	340	U	370	U	370	U	370	U	400	U
2,6-Dinitrotoluene	400	U	400	U	380	U	340	U	340	U	370	U	370	U	370	U	400	U
2-Chloronaphthalene	400	U	400	U	380	U	340	U	340	U	370	U	370	U	370	U	400	U
2-Chlorophenol	400	U	400	U	380	U	340	U	340	U	370	U	370	U	370	U	400	U
2-Methylnaphthalene	400	U	400	U	380	U	340	U	340	U	370	U	370	U	370	U	400	U
2-Methylphenol	400	U	400	U	380	U	340	U	340	U	370	U	370	U	370	U	400	U
2-Nitroaniline	990	U	1000	U	960	U	860	U	850	U	920	U	940	U	940	U	990	U
2-Nitrophenol	400	U	400	U	380	U	340	U	340	U	370	U	370	U	370	U	400	U
3,3'-Dichlorobenzidine	400	U	400	U	380	U	340	U	340	U	370	U	370	U	370	U	400	U
3-Nitroaniline	990	U	1000	U	960	U	860	U	850	U	920	U	940	U	940	U	990	U
4,6-Dinitro-2-methylphenol	990	U	1000	U	960	U	860	U	850	U	920	U	940	U	940	U	990	U
4-Bromophenyl-phenylether	400	U	400	U	380	U	340	U	340	U	370	U	370	U	370	U	400	U

Identifier	ORB01001		ORB01001D		ORB01101		ORB01201		ORB01301		ORB01401		ORB01401D		ORB01501		ORB01601	
Collect Date	28-Oct-94		28-Oct-94		29-Oct-94		29-Oct-94		11-Nov-94		29-Oct-94		29-Oct-94		28-Oct-94		28-Oct-94	
4-Chloro-3-methylphenol	400	U	400	U	380	U	340	U	340	U	370	U	370	U	370	U	400	U
4-Chloroaniline	400	U	400	U	380	U	340	U	340	U	370	U	370	U	370	U	400	U
4-Chlorophenyl-phenylether	400	U	400	U	380	U	340	U	340	U	370	U	370	U	370	U	400	U
4-Methylphenol	400	U	400	U	380	U	340	U	340	U	370	U	370	U	370	U	400	U
4-Nitroaniline	990	U	1000	U	960	U	860	U	850	U	920	U	940	U	940	U	990	U
4-Nitrophenol	990	U	1000	U	960	U	860	U	850	U	920	U	940	U	940	U	990	U
Acenaphthene	400	U	400	U	380	U	340	U	340	U	370	U	370	U	370	U	400	U
Acenaphthylene	400	U	400	U	380	U	340	U	340	U	370	U	370	U	370	U	400	U
Anthracene	400	U	400	U	380	U	340	U	340	U	370	U	370	U	370	U	400	U
Benzo(a)anthracene	400	U	400	U	380	U	340	U	340	U	370	U	370	U	370	U	400	U
Benzo(a)pyrene	400	U	400	U	380	U	340	U	340	U	370	U	370	U	370	U	400	U
Benzo(b)fluoranthene	400	U	400	U	380	U	340	U	340	U	370	U	370	U	370	U	400	U
Benzo(g,h,i)perylene	400	U	230	J	380	U	340	U	340	U	370	U	370	U	370	U	400	U
Benzo(k)fluoranthene	400	U	400	U	380	U	340	U	340	U	370	U	370	U	370	U	400	U
bis(2-Chloroethoxy)methane	400	U	400	U	380	U	340	U	340	U	370	U	370	U	370	U	400	U
bis(2-Chloroethyl)ether	400	U	400	U	380	U	340	U	340	U	370	U	370	U	370	U	400	U
bis(2-Ethylhexyl)phthalate	400	U	400	U	380	U	340	U	340	U	370	U	370	U	370	U	400	U
Butylbenzylphthalate	400	U	400	U	380	U	340	U	340	U	370	U	370	U	370	U	400	U
Carbazole	400	U	400	U	380	U	340	U	340	U	370	U	370	U	370	U	400	U
Chrysene	400	U	400	U	380	U	340	U	340	U	370	U	370	U	370	U	400	U
Di-n-butylphthalate	400	U	400	U	380	U	340	U	340	U	370	U	370	U	370	U	400	U
Di-n-octylphthalate	400	U	400	U	380	U	340	U	340	U	370	U	370	U	370	U	400	U
Dibenz(a,h)anthracene	400	U	400	U	380	U	340	U	340	U	370	U	370	U	370	U	400	U
Dibenzofuran	400	U	400	U	380	U	340	U	340	U	370	U	370	U	370	U	400	U
Diethylphthalate	400	U	400	U	380	U	340	U	340	U	370	U	370	U	370	U	400	U
Dimethylphthalate	400	U	400	U	380	U	340	U	340	U	370	U	370	U	370	U	400	U
Fluoranthene	400	U	400	U	380	U	340	U	340	U	370	U	370	U	370	U	120	J
Fluorene	400	U	400	U	380	U	340	U	340	U	370	U	370	U	370	U	400	U
Hexachlorobenzene	400	U	400	U	380	U	340	U	340	U	370	U	370	U	370	U	400	U
Hexachlorobutadiene	400	U	400	U	380	U	340	U	340	U	370	U	370	U	370	U	400	U
Hexachlorocyclopentadiene	400	U	400	U	380	U	340	U	340	U	370	U	370	U	370	U	400	U
Hexachloroethane	400	U	400	U	380	U	340	U	340	U	370	U	370	U	370	U	400	U
Indeno(1,2,3-cd)pyrene	400	U	400	U	380	U	340	U	340	U	370	U	370	U	370	U	400	U
Isophorone	400	U	400	U	380	U	340	U	340	U	370	U	370	U	370	U	400	U
N-Nitroso-di-n-propylamine	400	U	400	U	380	U	340	U	340	U	370	U	370	U	370	U	400	U
N-Nitrosodiphenylamine (1)	400	U	400	U	380	U	340	U	340	U	370	U	370	U	370	U	400	U
Naphthalene	400	U	400	U	380	U	340	U	340	U	370	U	370	U	370	U	400	U
Nitrobenzene	400	U	400	U	380	U	340	U	340	U	370	U	370	U	370	U	400	U
Pentachlorophenol	990	U	1000	U	960	U	860	U	850	U	920	U	940	U	940	U	990	U
Phenanthrene	400	U	400	U	380	U	340	U	340	U	370	U	370	U	370	U	400	U
Phenol	400	U	400	U	380	U	340	U	340	U	370	U	370	U	370	U	400	U
Pyrene	400	U	400	U	380	U	340	U	340	U	370	U	370	U	370	U	400	U

Identifier	ORB01001		ORB01001D		ORB01101		ORB01201		ORB01301		ORB01401		ORB01401D		ORB01501		ORB01601	
Collect Date	28-Oct-94		28-Oct-94		29-Oct-94		29-Oct-94		11-Nov-94		29-Oct-94		29-Oct-94		28-Oct-94		28-Oct-94	
Pesticides/PCBs, ug/kg																		
2,4,5-T	12	U	12	U	11	U	10	U	20	U	11	U	11	U	11	U	24	U
2,4-D	60	U	60	U	57	U	51	U	100	U	56	U	56	U	57	U	120	U
2,4-DB	60	U	60	U	57	U	51	U	100	U	56	U	56	U	57	U	120	U
2,4-DP (Dichloroprop)	60	U	60	U	57	U	51	U	100	U	56	U	56	U	57	U	120	U
4,4'-DDD	4	U	4	U	3.8	U	17	UJ	3.4	U	3.7	U	3.7	U	3.8	U	3.9	U
4,4'-DDE	4	U	4	U	3.8	U	130	J	3.4	U	3.7	U	3.7	U	3.8	U	3.9	U
4,4'-DDT	4	U	4	U	3.8	U	87	J	3.4	U	3.7	U	3.7	U	3.8	U	3.9	U
Aldrin	2	U	2	U	2	U	8.7	UJ	1.7	U	1.9	U	1.9	U	2	U	2	U
alpha-BHC	2	U	2	U	2	U	8.7	UJ	1.7	U	1.9	U	1.9	U	2	U	2	U
alpha-Chlordane	2	U	2	U	2	U	43	J	1.7	U	1.9	U	1.9	U	2	U	2	U
Aroclor-1016	40	U	40	U	38	U	170	UJ	34	U	37	U	37	U	38	U	39	U
Aroclor-1221	81	U	81	U	77	U	340	UJ	68	U	74	U	75	U	77	U	80	U
Aroclor-1232	40	U	40	U	38	U	170	UJ	34	U	37	U	37	U	38	U	39	U
Aroclor-1242	40	U	40	U	38	U	170	UJ	34	U	37	U	37	U	38	U	39	U
Aroclor-1248	40	U	40	U	38	U	170	UJ	34	U	37	U	37	U	38	U	39	U
Aroclor-1254	40	U	40	U	38	U	170	UJ	34	U	37	U	37	U	38	U	39	U
Aroclor-1260	40	U	40	U	38	U	170	UJ	34	U	37	U	37	U	38	U	39	U
beta-BHC	2	U	2	U	2	U	8.7	UJ	1.7	U	1.9	U	1.9	U	2	U	2	U
Dalapon	120	U	120	U	110	U	100	U	200	U	110	U	110	U	110	U	240	U
delta-BHC	2	U	2	U	2	U	8.7	UJ	1.7	U	1.9	U	1.9	U	2	U	2	U
Dicamba	12	U	12	U	11	U	10	U	20	U	11	U	11	U	11	U	24	U
Dieldrin	4	U	4	U	3.8	U	17	UJ	3.4	U	3.7	U	3.7	U	3.8	U	3.9	U
Dinoseb	12	U	12	U	11	U	10	U	20	U	11	U	11	U	11	U	24	U
Endosulfan I	2	U	2	U	2	U	8.7	UJ	1.7	U	1.9	U	1.9	U	2	U	2	U
Endosulfan II	4	U	4	U	3.8	U	17	UJ	3.4	U	3.7	U	3.7	U	3.8	U	3.9	U
Endosulfan sulfate	4	U	4	U	3.8	U	17	UJ	3.4	U	3.7	U	3.7	U	3.8	U	3.9	U
Endrin	4	U	4	U	3.8	U	17	UJ	3.4	U	3.7	U	3.7	U	3.8	U	3.9	U
Endrin aldehyde	4	U	4	U	3.8	U	17	UJ	3.4	U	3.7	U	3.7	U	3.8	U	3.9	U
Endrin ketone	4	U	4	U	3.8	U	17	UJ	3.4	U	3.7	U	3.7	U	3.8	U	3.9	U
gamma-BHC (Lindane)	2	U	2	U	2	U	8.7	UJ	1.7	U	1.9	U	1.9	U	2	U	2	U
gamma-Chlordane	2	U	2	U	2	U	43	J	1.7	U	1.9	U	1.9	U	2	U	2	U
Heptachlor	2	U	2	U	2	U	8.7	UJ	1.7	U	1.9	U	1.9	U	2	U	2	U
Heptachlor epoxide	2	U	2	U	2	U	8.7	UJ	1.7	U	1.9	U	1.9	U	2	U	2	U
MCPA	6000	U	6000	U	5700	U	5100	U	10000	U	5600	U	5600	U	5700	U	12000	U
MCPP	6000	U	6000	U	5700	U	5100	U	10000	U	5600	U	5600	U	5700	U	12000	U
Methoxychlor	20	U	20	U	20	U	87	UJ	17	U	19	U	19	U	20	U	20	U
Silvex (2,4,5-TP)	12	U	12	U	11	U	10	U	20	U	11	U	11	U	11	U	24	U
Toxaphene	200	U	200	U	200	U	870	UJ	170	U	190	U	190	U	200	U	200	U

Appendix . Summary of Groundwater Analytical Results, Background Sampling Program, NTC - Orlando

Identifier	ORG00101		ORG00201		ORG00201D		ORG00301		ORG00401		ORG00501		ORG00601		ORG00701		ORG00701D		ORG00801		ORG00901		ORG01001	
Collect Date	11-Nov-94		10-Nov-94		10-Nov-94		10-Nov-94		10-Nov-94		10-Nov-94		9-Nov-94		9-Nov-94		9-Nov-94		9-Nov-94		10-Nov-94		10-Nov-94	
Inorganics, ug/L																								
Aluminum	434		14.6	U	22.7	B	970		688		3690		2480		118	B	115	B	3510		7260		3080	
Antimony	1.4	U	1.2	U	1.9	B	1.2	U	1.2	U	1.2	U	1.2	U	1.2	U	1.2	U	1.2	U	2.2	B	1.2	U
Arsenic	3.1	U	3.7	B	1.5	U	2	B	2	B	2.7	B	2.8	B	1.5	U	1.5	U	1.5	U	1.7	B	1.5	U
Barium	2	B	4.5	B	4.5	B	5.3	B	8.5	B	14.6	B	17.9	B	9.1	B	8.4	B	9.7	B	71	B	33	B
Beryllium	0.2	U	0.2	U	0.2	U	0.2	U	0.2	U	0.2	U	0.2	U	0.2	U	0.2	U	0.2	U	0.2	U	0.2	U
Cadmium	2.1	U	2.1	U	2.1	U	2.8	B	2.1	U	2.1	U	2.1	U	2.1	U	2.1	U	2.1	U	2.1	U	2.1	U
Calcium	35500		28500	J	27900	J	7250	J	27000	J	16600	J	2660	J	4690	J	4560	J	42500	J	9320	J	14500	J
Chromium	1.9	U	1.9	U	1.9	U	2.4	B	1.9	U	5.4	B	2.7	B	1.9	U	1.9	U	4.6	B	6	B	2.4	B
Cobalt	2.6	U	2.6	U	2.6	U	2.6	U	2.6	U	2.6	U	2.6	U	2.6	U	2.6	U	2.6	U	2.6	U	2.6	U
Copper	1.8	U	1.5	U	1.5	U	1.5	U	1.5	U	3.6	B	1.5	U	1.5	U	1.5	U	1.8	B	1.5	U	1.5	U
Iron	1060		16	B	16.9	B	197		42.8	B	1100		270		1540		1510		239		1070		301	
Lead	1.7	B	1.3	UJ	1.3	UJ	1.3	UJ	1.3	UJ	2.3	J	1.3	UJ	1.3	UJ	1.3	UJ	1.3	UJ	1.3	UJ	1.3	UJ
Magnesium	4350	B	2990	J	2890	J	713	J	1540	J	3470	J	722	J	1560	J	1500	J	805	J	4930	J	1890	J
Manganese	11.4	B	3	B	2.8	B	9.5	B	2.4	B	12.6	B	5.4	B	12.5	B	11.7	B	5.6	B	14.1	B	10.8	B
Mercury	0.02	U	0.02	UJ	0.05	J	0.02	UJ	0.02	UJ	0.12	J	0.02	UJ	0.05	J	0.03	J	0.06	J	0.06	J	0.06	J
Nickel	9.1	U	9.1	UJ	9.1	UJ	9.1	UJ	9.1	UJ	9.1	UJ	9.1	UJ	9.1	UJ	9.1	UJ	9.1	UJ	9.1	UJ	9.1	UJ
Potassium	4840	B	5460		4830	B	419	B	1090	B	1510	B	339	U	750	B	339	U	339	U	339	U	339	U
Selenium	2	U	5.4		4.3	J	2	U	2	U	2	U	2	U	2	U	2	U	2	U	2	U	2	U
Silver	2.2	U	2.2	U	2.2	U	2.2	U	2.2	U	2.2	U	2.2	U	2.2	U	2.2	U	2.2	U	2.2	U	2.2	U
Sodium	5600		19800	J	19100	J	814	J	7590	J	3160	J	16700	J	6860	J	7080	J	1170	J	2860	J	18600	J
Thallium	1.3	UJ	1.3	U	1.9	B	1.3	U	1.3	U	1.3	U	1.3	U	1.3	UJ	1.3	UJ	1.3	U	1.3	U	1.3	UJ
Vanadium	2.5	U	11	B	9.3	B	3.1	B	7.4	B	10.6	B	16.8	B	6	B	2.9	B	19.2	B	13.5	B	13.7	B
Zinc	2	B	1.7	U	1.1	U	1.4	U	2.2	U	3.7	U	2.9	U	5	U	4.9	U	1.4	U	3.4	U	1.7	U
Volatile Organics, ug/L																								
1,1,1-Trichloroethane	1	U	1	U	1	U	1	U	1	U	1	U	1	U	1	U	1	U	1	U	1	U	1	U
1,1,2,2-Tetrachloroethane	1	U	1	U	1	U	1	U	1	U	1	U	1	U	1	U	1	U	1	U	1	U	1	U
1,1,2-Trichloroethane	1	U	1	U	1	U	1	U	1	U	1	U	1	U	1	U	1	U	1	U	1	U	1	U
1,1-Dichloroethane	1	U	1	U	1	U	1	U	1	U	1	U	1	U	1	U	1	U	1	U	1	U	1	U
1,1-Dichloroethene	1	U	1	U	1	U	1	U	1	U	1	U	1	U	1	U	1	U	1	U	1	U	1	U
1,2-Dibromo-3-chloropropane	1	U	1	U	1	U	1	UR	1	UR	1	UR	1	UR	1	UR	1	U	1	UR	1	UR	1	U
1,2-Dibromoethane	1	U	1	U	1	U	1	U	1	U	1	U	1	U	1	U	1	U	1	U	1	U	1	U
1,2-Dichlorobenzene	1	U	1	U	1	U	1	U	1	U	1	U	1	U	1	U	1	U	1	U	1	U	1	U
1,2-Dichloroethane	1	U	1	U	1	U	1	U	1	U	1	U	1	U	1	U	1	U	1	U	1	U	1	U
1,2-Dichloropropane	1	U	1	U	1	U	1	U	1	U	1	U	1	U	1	U	1	U	1	U	1	U	1	U
1,3-Dichlorobenzene	1	U	1	U	1	U	1	U	1	U	1	U	1	U	1	U	1	U	1	U	1	U	1	U
1,4-Dichlorobenzene	1	U	1	U	1	U	1	U	1	U	1	U	1	U	1	U	1	U	1	U	1	U	1	U
2-Butanone	5	UR	5	UR	5	UR	5	UR	5	UR	5	UR	5	UR	5	UR	5	UR	5	UR	5	UR	5	UR
2-Hexanone	5	UR	5	UR	5	UR	5	U	5	U	5	U	5	U	5	U	5	UR	5	U	5	U	5	UR
4-Methyl-2-pentanone	5	U	5	U	5	U	5	U	5	U	5	U	5	U	5	U	5	U	5	U	5	U	5	U
Acetone	5	UR	5	UR	5	UR	5	UR	5	UR	5	UR	5	UR	5	UR	5	UR	5	UR	5	UR	5	UR
Benzene	1	U	1	U	1	U	1	U	1	U	1	U	1	U	1	U	1	U	1	U	1	U	1	U
Bromochloromethane	1	U	1	U	1	U	1	U	1	U	1	U	1	U	1	U	1	U	1	U	1	U	1	U
Bromodichloromethane	1	U	1	U	1	U	1	U	1	U	1	U	1		1	U	1	U	1	U	1	U	1	U
Bromoform	1	U	1	U	1	U	1	U	1	U	1	U	1	U	1	U	1	U	1	U	1	U	1	U
Bromomethane	1	U	1	U	1	U	1	U	1	U	1	U	1	U	1	U	1	U	1	U	1	U	1	U
Carbon disulfide	1	U	1	U	1	U	1	U	1	U	1	U	1	U	1	U	1	U	5	UJ	1	UJ	1	U
Carbon tetrachloride	1	U	1	U	1	U	1	U	1	U	1	U	1	U	1	U	1	U	1	U	1	U	1	U
Chlorobenzene	1	U	1	U	1	U	1	U	1	U	1	U	1	U	1	U	1	U	1	U	1	U	1	U
Chloroethane	1	U	1	U	1	U	1	U	1	U	1	U	1	U	1	U	1	U	1	U	1	U	1	U
Chloroform	1	U	0.7	J	0.6	J	1	U	1	U	1	U	4		1		1		0.6	J	1	U	0.5	J
Chloromethane	1	U	1	U	1	U	1	U	1	U	1	U	1	U	1	U	1	U	1	U	1	U	1	U
cis-1,2-Dichloroethene	1	U	1	U	1	U	1	U	1	U	1	U	1	U	1	U	1	U	1	U	1	U	1	U
cis-1,3-Dichloropropene	1	U	1	U	1	U	1	U	1	U	1	U	1	U	1	U	1	U	1	U	1	U	1	U
Dibromochloromethane	1	U	1	U	1	U	1	U	1	U	1	U	1	U	1	U	1	U	1	U	1	U	1	U
Ethylbenzene	1	U	1	U	1	U	1	U	1	U	1	U	1	U	1	U	1	U	1	U	1	U	1	U
Methylene chloride	1	U	1	U	1	U	1	U	1	U	1	U	1	U	1	U	1	U	1	U	1	U	1	U
Styrene	1	U	1	U	1	U	1	U	1	U	1	U	1	U	1	U	1	U	1	U	1	U	1	U

Identifier	ORG00101		ORG00201		ORG00201D		ORG00301		ORG00401		ORG00501		ORG00601		ORG00701		ORG00701D		ORG00801		ORG00901		ORG01001	
Collect Date	11-Nov-94		10-Nov-94		10-Nov-94		10-Nov-94		10-Nov-94		10-Nov-94		9-Nov-94		9-Nov-94		9-Nov-94		9-Nov-94		10-Nov-94		10-Nov-94	
Tetrachloroethene	1	U	1	U	1	U	1	U	1	U	1	U	1	U	1	U	1	U	1	U	1	U	1	U
Toluene	1	U	1	U	1	U	1	U	1	U	1	U	1	U	1	U	1	U	1	U	1	U	1	U
trans-1,2-Dichloroethene	1	U	1	U	1	U	1	U	1	U	1	U	1	U	1	U	1	U	1	U	1	U	1	U
trans-1,3-Dichloropropene	1	U	1	U	1	U	1	U	1	U	1	U	1	U	1	U	1	U	1	U	1	U	1	U
Trichloroethene	1	U	1	U	1	U	1	U	1	U	1	U	1	U	1	U	1	U	1	U	1	U	1	U
Vinyl chloride	1	U	1	U	1	U	1	U	1	U	1	U	1	U	1	U	1	U	1	U	1	U	1	U
Xylene (total)	1	U	1	U	1	U	1	U	1	U	1	U	1	U	1	U	1	U	1	U	1	U	1	U
Semivolatile Organics, ug/L																								
1,2,4-Trichlorobenzene	10	U	10	U	10	U	10	U	10	U	10	U	10	U	10	U	10	U	10	U	10	U	10	U
2,2'-oxybis(1-Chloro[illegible]	10	U	10	U	10	U	10	U	10	U	10	U	10	U	10	U	10	U	10	U	10	U	10	U
2,4,5-Trichlorophe[illegible]	25	U	25	U	25	U	25	U	25	U	25	U	25	U	25	U	25	U	25	U	25	U	25	U
2,4,6-Trichlorophenol	10	U	10	U	10	U	10	U	10	U	10	U	10	U	10	U	10	U	10	U	10	U	10	U
2,4-Dichlorophenol	10	U	10	U	10	U	10	U	10	U	10	U	10	U	10	U	10	U	10	U	10	U	10	U
2,4-Dimethylphenol	10	U	10	U	10	U	10	U	10	U	10	U	10	U	10	U	10	U	10	U	10	U	10	U
2,4-Dinitrophenol	25	U	25	U	25	U	25	U	25	U	25	U	25	U	25	U	25	U	25	U	25	U	25	U
2,4-Dinitrotoluene	10	U	10	U	10	U	10	U	10	U	10	U	10	U	10	U	10	U	10	U	10	U	10	U
2,6-Dinitrotoluene	10	U	10	U	10	U	10	U	10	U	10	U	10	U	10	U	10	U	10	U	10	U	10	U
2-Chloronaphthalene	10	U	10	U	10	U	10	U	10	U	10	U	10	U	10	U	10	U	10	U	10	U	10	U
2-Chlorophenol	10	U	10	U	10	U	10	U	10	U	10	U	10	U	10	U	10	U	10	U	10	U	10	U
2-Methylnaphthalene	10	U	10	U	10	U	10	U	10	U	10	U	10	U	10	U	10	U	10	U	10	U	10	U
2-Methylphenol	10	U	10	U	10	U	10	U	10	U	10	U	10	U	10	U	10	U	10	U	10	U	10	U
2-Nitroaniline	25	U	25	U	25	U	25	U	25	U	25	U	25	U	25	U	25	U	25	U	25	U	25	U
2-Nitrophenol	10	U	10	U	10	U	10	U	10	U	10	U	10	U	10	U	10	U	10	U	10	U	10	U
3,3'-Dichlorobenzidine	10	U	10	U	10	U	10	U	10	U	10	U	10	U	10	U	10	U	10	U	10	U	10	U
3-Nitroaniline	25	U	25	U	25	U	25	U	25	U	25	U	25	U	25	U	25	U	25	U	25	U	25	U
4,6-Dinitro-2-methylphenol	25	U	25	U	25	U	25	U	25	U	25	U	25	U	25	U	25	U	25	U	25	U	25	U
4-Bromophenyl-phenylether	10	U	10	U	10	U	10	U	10	U	10	U	10	U	10	U	10	U	10	U	10	U	10	U
4-Chloro-3-methylphenol	10	U	10	U	10	U	10	U	10	U	10	U	10	U	10	U	10	U	10	U	10	U	10	U
4-Chloroaniline	10	U	10	U	10	U	10	U	10	U	10	U	10	U	10	U	10	U	10	U	10	U	10	U
4-Chlorophenyl-phenylether	10	U	10	U	10	U	10	U	10	U	10	U	10	U	10	U	10	U	10	U	10	U	10	U
4-Methylphenol	10	U	10	U	10	U	10	U	10	U	10	U	10	U	10	U	10	U	10	U	10	U	10	U
4-Nitroaniline	25	U	25	U	25	U	25	U	25	U	25	U	25	U	25	U	25	U	25	U	25	U	25	U
4-Nitrophenol	25	U	25	U	25	U	25	U	25	U	25	U	25	U	25	U	25	U	25	U	25	U	25	U
Acenaphthene	10	U	10	U	10	U	10	U	10	U	10	U	10	U	10	U	10	U	10	U	10	U	10	U
Acenaphthylene	10	U	10	U	10	U	10	U	10	U	10	U	10	U	10	U	10	U	10	U	10	U	10	U
Anthracene	10	U	10	U	10	U	10	U	10	U	10	U	10	U	10	U	10	U	10	U	10	U	10	U
Benzo(a)anthracene	10	U	10	U	10	U	10	U	10	U	10	U	10	U	10	U	10	U	10	U	10	U	10	U
Benzo(a)pyrene	0.1	U	0.1	U	0.1	U	0.1	U	0.1	U	0.1	U	0.1	U	0.1	U	0.1	U	0.1	U	0.1	U	0.1	U
Benzo(b)fluoranthene	10	U	10	U	10	U	10	U	10	U	10	U	10	U	10	U	10	U	10	U	10	U	10	U
Benzo(g,h,i)perylene	10	U	10	U	10	U	10	U	10	U	10	U	10	U	10	U	10	U	10	U	10	U	10	U
Benzo(k)fluoranthene	10	U	10	U	10	U	10	U	10	U	10	U	10	U	10	U	10	U	10	U	10	U	10	U
bis(2-Chloroethoxy)methane	10	U	10	U	10	U	10	U	10	U	10	U	10	U	10	U	10	U	10	U	10	U	10	U
bis(2-Chloroethyl)ether	10	U	10	U	10	U	10	U	10	U	10	U	10	U	10	U	10	U	10	U	10	U	10	U
bis(2-Ethylhexyl)phthalate	1	U	1	U	1	U	1	U	1	U	1	U	1	U	1	U	2	U	1	U	1	U	1	U
Butylbenzylphthalate	10	U	10	U	10	U	10	U	10	U	10	U	10	U	10	U	10	U	10	U	10	U	10	U
Carbazole	10	U	10	U	10	U	10	U	10	U	10	U	10	U	10	U	10	U	10	U	10	U	10	U
Chrysene	10	U	10	U	10	U	10	U	10	U	10	U	10	U	10	U	10	U	10	U	10	U	10	U
Di-n-butylphthalate	10	U	10	U	10	U	10	U	10	U	10	U	10	U	2	J	10	U	10	U	10	U	10	U
Di-n-octylphthalate	10	U	10	U	2	J	10	U	10	U	2	J	10	U	10	U	3	J	2	J	10	U	10	U
Dibenz(a,h)anthracene	10	U	10	U	10	U	10	U	10	U	10	U	10	U	10	U	10	U	10	U	10	U	10	U
Dibenzofuran	10	U	10	U	10	U	10	U	10	U	10	U	10	U	10	U	10	U	10	U	10	U	10	U
Diethylphthalate	10	U	10	U	10	U	10	U	10	U	10	U	10	U	10	U	10	U	10	U	10	U	10	U
Dimethylphthalate	10	U	10	U	10	U	10	U	10	U	10	U	10	U	10	U	10	U	10	U	10	U	10	U
Fluoranthene	10	U	10	U	10	U	10	U	10	U	10	U	10	U	10	U	10	U	10	U	10	U	10	U
Fluorene	10	U	10	U	10	U	10	U	10	U	10	U	10	U	10	U	10	U	10	U	10	U	10	U
Hexachlorobenzene	1	U	1	U	1	U	1	U	1	U	1	U	1	U	1	U	1	U	1	U	1	U	1	U
Hexachlorobutadiene	10	U	10	U	10	U	10	U	10	U	10	U	10	U	10	U	10	U	10	U	10	U	10	U
Hexachlorocyclopentadiene	10	U	10	U	10	U	10	U	10	U	10	U	10	U	10	U	10	U	10	U	10	U	10	U
Hexachloroethane	10	U	10	U	10	U	10	U	10	U	10	U	10	U	10	U	10	U	10	U	10	U	10	U

Identifier	ORG00101		ORG00201		ORG00201D		ORG00301		ORG00401		ORG00501		ORG00601		ORG00701		ORG00701D		ORG00801		ORG00901		ORG01001	
Collect Date	11-Nov-94		10-Nov-94		10-Nov-94		10-Nov-94		10-Nov-94		10-Nov-94		9-Nov-94		9-Nov-94		9-Nov-94		9-Nov-94		10-Nov-94		10-Nov-94	
Indeno(1,2,3-cd)pyrene	10	U	10	U	10	U	10	U	10	U	10	U	10	U	10	U	10	U	10	U	10	U	10	U
Isophorone	10	U	10	U	10	U	10	U	10	U	10	U	10	U	10	U	10	U	10	U	10	U	10	U
N-Nitroso-di-n-propylamine	10	U	10	U	10	U	10	U	10	U	10	U	10	U	10	U	10	U	10	U	10	U	10	U
N-Nitrosodiphenylamine (1)	10	U	10	U	10	U	10	U	10	U	10	U	10	U	10	U	10	U	10	U	10	U	10	U
Naphthalene	10	U	10	U	10	U	10	U	10	U	10	U	10	U	10	U	10	U	10	U	10	U	10	U
Nitrobenzene	10	U	10	U	10	U	10	U	10	U	10	U	10	U	10	U	10	U	10	U	10	U	10	U
Pentachlorophenol	1	U	1	U	1	U	1	U	1	U	1	U	1	U	1	U	1	U	1	U	1	U	1	U
Phenanthrene	10	U	10	U	10	U	10	U	10	U	10	U	10	U	10	U	10	U	10	U	10	U	10	U
Phenol	10	U	10	U	10	U	10	U	10	U	10	U	10	U	10	U	10	U	10	U	10	U	10	U
Pyrene	10	U	10	U	10	U	10	U	10	U	10	U	10	U	10	U	10	U	10	U	10	U	10	U
Pesticides/PCBs, ug/L																								
2,4,5-T	0.5	U	0.5	U	0.5	U	0.5	U	0.5	U	0.5	U	0.5	U	0.5	U	0.5	U	0.5	U	0.5	U	0.5	U
2,4-D	2.5	U	2.5	U	2.5	U	2.5	U	2.5	U	2.5	U	2.5	U	2.5	U	2.5	U	2.5	U	2.5	U	2.5	U
2,4-DB	2.5	U	2.5	U	2.5	U	2.5	U	2.5	U	2.5	U	2.5	U	2.5	U	2.5	U	2.5	U	2.5	U	2.5	U
2,4-DP (Dichloroprop)	2.5	U	2.5	U	2.5	U	2.5	U	2.5	U	2.5	U	2.5	U	2.5	U	2.5	U	2.5	U	2.5	U	2.5	U
4,4'-DDD	0.1	U	0.1	UJ	0.1	U	0.1	U	0.1	UJ	0.1	UJ	0.1	UJ	0.1	UJ	0.1	UJ	0.1	UJ	0.1	U	0.1	UJ
4,4'-DDE	0.1	U	0.1	UJ	0.1	U	0.1	U	0.1	UJ	0.1	UJ	0.1	UJ	0.1	UJ	0.1	UJ	0.1	UJ	0.1	U	0.1	UJ
4,4'-DDT	0.1	U	0.1	UJ	0.1	U	0.1	U	0.1	UJ	0.1	UJ	0.1	UJ	0.1	UJ	0.1	UJ	0.1	UJ	0.1	U	0.1	UJ
Aldrin	0.05	U	0.05	UJ	0.05	U	0.05	U	0.05	UJ	0.05	UJ	0.05	UJ	0.05	UJ	0.05	UJ	0.05	UJ	0.05	U	0.05	UJ
alpha-BHC	0.05	U	0.05	UJ	0.05	U	0.05	U	0.05	UJ	0.05	UJ	0.05	UJ	0.05	UJ	0.05	UJ	0.05	UJ	0.05	U	0.05	UJ
alpha-Chlordane	0.05	U	0.05	UJ	0.05	U	0.05	U	0.05	UJ	0.05	UJ	0.05	UJ	0.05	UJ	0.05	UJ	0.05	UJ	0.05	U	0.05	UJ
Aroclor-1016	0.5	U	0.5	UJ	0.5	U	0.5	U	0.5	UJ	0.5	UJ	0.5	UJ	0.5	UJ	0.5	UJ	0.5	UJ	0.5	U	0.5	UJ
Aroclor-1221	0.5	U	0.5	UJ	0.5	U	0.5	U	0.5	UJ	0.5	UJ	0.5	UJ	0.5	UJ	0.5	UJ	0.5	UJ	0.5	U	0.5	UJ
Aroclor-1232	0.5	U	0.5	UJ	0.5	U	0.5	U	0.5	UJ	0.5	UJ	0.5	UJ	0.5	UJ	0.5	UJ	0.5	UJ	0.5	U	0.5	UJ
Aroclor-1242	0.5	U	0.5	UJ	0.5	U	0.5	U	0.5	UJ	0.5	UJ	0.5	UJ	0.5	UJ	0.5	UJ	0.5	UJ	0.5	U	0.5	UJ
Aroclor-1248	0.5	U	0.5	UJ	0.5	U	0.5	U	0.5	UJ	0.5	UJ	0.5	UJ	0.5	UJ	0.5	UJ	0.5	UJ	0.5	U	0.5	UJ
Aroclor-1254	0.5	U	0.5	UJ	0.5	U	0.5	U	0.5	UJ	0.5	UJ	0.5	UJ	0.5	UJ	0.5	UJ	0.5	UJ	0.5	U	0.5	UJ
Aroclor-1260	0.5	U	0.5	UJ	0.5	U	0.5	U	0.5	UJ	0.5	UJ	0.5	UJ	0.5	UJ	0.5	UJ	0.5	UJ	0.5	U	0.5	UJ
beta-BHC	0.05	U	0.05	UJ	0.05	U	0.05	U	0.05	UJ	0.05	UJ	0.05	UJ	0.05	UJ	0.05	UJ	0.05	UJ	0.05	U	0.05	UJ
Dalapon	5	U	5	U	5	U	5	U	5	U	5	U	5	U	5	U	5	U	5	U	5	U	5	U
delta-BHC	0.05	U	0.05	UJ	0.05	U	0.05	U	0.05	UJ	0.05	UJ	0.05	UJ	0.05	UJ	0.05	UJ	0.05	UJ	0.05	U	0.05	UJ
Dicamba	0.5	U	0.5	U	0.5	U	0.5	U	0.5	U	0.5	U	0.5	U	0.5	U	0.5	U	0.5	U	0.5	U	0.5	U
Dieldrin	0.1	U	0.1	UJ	0.1	U	0.1	U	0.1	UJ	0.1	UJ	0.1	UJ	0.1	UJ	0.1	UJ	0.1	UJ	0.1	U	0.1	UJ
Dinoseb	0.5	U	0.5	U	0.5	U	0.5	U	0.5	U	0.5	U	0.5	U	0.5	U	0.5	U			0.5	U	0.5	U
Endosulfan I	0.05	U	0.05	UJ	0.05	U	0.05	U	0.05	UJ	0.05	UJ	0.05	UJ	0.05	UJ	0.05	UJ	0.05	UJ	0.05	U	0.05	UJ
Endosulfan II	0.1	U	0.1	UJ	0.1	U	0.1	U	0.1	UJ	0.1	UJ	0.1	UJ	0.1	UJ	0.1	UJ	0.1	UJ	0.1	U	0.1	UJ
Endosulfan sulfate	0.1	U	0.1	UJ	0.1	U	0.1	U	0.1	UJ	0.1	UJ	0.1	UJ	0.1	UJ	0.1	UJ	0.1	UJ	0.1	U	0.1	UJ
Endrin	0.1	U	0.1	UJ	0.1	U	0.1	U	0.1	UJ	0.1	UJ	0.1	UJ	0.1	UJ	0.1	UJ	0.1	UJ	0.1	U	0.1	UJ
Endrin aldehyde	0.1	U	0.1	UJ	0.1	U	0.1	U	0.1	UJ	0.1	UJ	0.1	UJ	0.1	UJ	0.1	UJ	0.1	UJ	0.1	U	0.1	UJ
Endrin ketone	0.1	U	0.1	UJ	0.1	U	0.1	U	0.1	UJ	0.1	UJ	0.1	UJ	0.1	UJ	0.1	UJ	0.1	UJ	0.1	U	0.1	UJ
gamma-BHC (Lindane)	0.05	U	0.05	UJ	0.05	U	0.05	U	0.05	UJ	0.05	UJ	0.05	UJ	0.05	UJ	0.05	UJ	0.05	UJ	0.05	U	0.05	UJ
gamma-Chlordane	0.05	U	0.05	UJ	0.05	U	0.05	U	0.05	UJ	0.05	UJ	0.05	UJ	0.05	UJ	0.05	UJ	0.05	UJ	0.05	U	0.05	UJ
Heptachlor	0.05	U	0.05	UJ	0.05	U	0.05	U	0.05	UJ	0.05	UJ	0.05	UJ	0.05	UJ	0.05	UJ	0.05	UJ	0.05	U	0.05	UJ
Heptachlor epoxide	0.05	U	0.05	UJ	0.05	U	0.05	U	0.05	UJ	0.05	UJ	0.05	UJ	0.05	UJ	0.05	UJ	0.05	UJ	0.05	U	0.05	UJ
MCPA	250	U	250	U	250	U	250	U	250	U	250	U	250	U	250	U	250	U	250	U	250	U	250	U
MCPP	250	U	250	U	250	U	250	U	250	U	250	U	250	U	250	U	250	U	250	U	250	U	250	U
Methoxychlor	0.5	U	0.5	UJ	0.5	U	0.5	U	0.5	UJ	0.5	UJ	0.5	UJ	0.5	UJ	0.5	UJ	0.5	UJ	0.5	U	0.5	UJ
Silvex (2,4,5-TP)	0.5	U	0.5	U	0.5	U	0.5	U	0.5	U	0.5	U	0.5	U	0.5	U	0.5	U	0.5	U	0.5	U	0.5	U
Toxaphene	5	U	5	UJ	5	U	5	U	5	UJ	5	UJ	5	UJ	5	UJ	5	UJ	5	UJ	5	U	5	UJ
Radiological, pCi/L																								
Actinium-228	36.8	U	38.6	U	32.6	U	37.3	U	23.3	U	37.4	U	30.6	U	37.7	UJ	23.9	U	25.7	U	38.9	U	24.9	U
Bismuth-212	71.6	U	133	U	185	U	175	U	227	U	185	U	202	U	232	J	192	U	210	U	126	U	229	U
Bismuth-214	23.9	U	26.7	U	23.4	U	22.6	U	20	U	24	U	19.3	U	26.1	UJ	17.3	U	18.9	U	23.4	U	17.2	U
Cesium-137	6.4	U	8.4	U	4.1	U	4	U	5.8	U	5.9	U	3.3	U	7.8	UJ	4.7	U	5.7	U	5.4	U	6.3	U
Gross Alpha	1	U	1	U	3.1	J	4.2	J	1	U	7.4	J	8.1	J	16.2	J	2.2	J	5.9	J	9	J	2.4	J
Gross Beta	4.4		6.3		5.7	J	3	UJ	3	U	4.4	J	3	UJ	3	J	3	UJ	3	UJ	3	UJ	3	UJ
Lead-212	16.7	U	17.2	U	16.5	U	17.7	U	15.2	U	17.1	U	14.9	U	19	UJ	15.1	U	15.2	U	16.9	U	14.3	U
Lead-214	22.3	U	23.2	U	20.6	U	22.8	U	17.2	U	23.7	U	16.9	U	23.2	UJ	17.1	U	17	U	22.5	U	15.2	U

Identifier	ORG00101		ORG00201		ORG00201D		ORG00301		ORG00401		ORG00501		ORG00601		ORG00701		ORG00701D		ORG00801		ORG00901		ORG01001	
Collect Date	11-Nov-94		10-Nov-94		10-Nov-94		10-Nov-94		10-Nov-94		10-Nov-94		9-Nov-94		9-Nov-94		9-Nov-94		9-Nov-94		10-Nov-94		10-Nov-94	
Potassium-40	199	U	213	U	195	U	200	U	99.1	U	200	U	98.7	U	192	UJ	92.3	U	105	U	199	U	83	U
Thallium-208	11.1	U	11.8	U	10.1	U	11.2	U	8.1	U	9.5	U	7.5	U	10	UJ	7.4	U	7.5	U	9.6	U	6.5	U
Thorium-228	1030	U	1010	U	814	U	1040	U	599	U	1040	U	614	U	1060	UJ	584	U	618	U	1070	U	564	U
Thorium-234	579	U	670	U	669	U	524	U	317	U	661	U	326	U	639	UJ	320	U	331	U	620	U	313	U
Uranium-235	42.8	U	50.6	U	44.5	U	51.9	U	32.5	U	30.5	U	36.2	U	47.4	UJ	34.8	U	42.3	U	47.1	U	33.3	U

APPENDIX F

POPULATION STATISTICS

Outside values - location details - Background Surface Soils:

ORS00101

HI	2,4-D	200.0000	U
HI	4,4'-DDD	17.0000	U
HI	4,4'-DDE	130.0000	
HI	4,4'-DDT	62.0000	J
HI	Aldrin	8.7000	U
HI	Aroclor-1016	170.0000	U
HI	Aroclor-1221	340.0000	U
HI	Aroclor-1232	170.0000	U
HI	Aroclor-1242	170.0000	U
HI	Aroclor-1248	170.0000	U
HI	Aroclor-1254	170.0000	U
HI	Aroclor-1260	170.0000	U
HI	Dieldrin	95.0000	
HI	Endosulfan I	8.7000	U
HI	Endosulfan II	17.0000	U
HI	Endosulfan sulfate	17.0000	U
HI	Endrin	17.0000	U
HI	Endrin aldehyde	17.0000	U
HI	Endrin ketone	17.0000	U
HI	Heptachlor	8.7000	U
HI	Heptachlor epoxide	8.7000	U
HI	Methoxychlor	87.0000	U
HI	Toxaphene	870.0000	U
HI	Zinc	10.1000	
HI	alpha-BHC	8.7000	U
HI	alpha-Chlordane	20.0000	
HI	beta-BHC	8.7000	U
HI	delta-BHC	8.7000	U
HI	gamma-BHC (Lindane)	8.7000	U
HI	gamma-Chlordane	13.0000	

ORS00201

HI	Barium	8.7000	B
LO	Benzo(g,h,i)perylene	110.0000	J
HI	Beryllium	0.0500	B
HI	Calcium	124000.0000	
HI	Chromium	5.6000	
HI	Copper	2.6000	B
HI	Magnesium	1330.0000	
HI	Manganese	12.5000	
HI	Nickel	2.2000	B
HI	Sodium	45.7000	B
HI	Thallium	1.0000	B
HI	Vanadium	5.7000	B
HI	Zinc	20.9000	

ORS00301

HI	2,4-D	210.0000	U
HI	Acetone	13.0000	UJ
LO	Benzo(g,h,i)perylene	91.0000	J
HI	Selenium	0.5300	B

ORS00401

HI 2,4-D	200.0000	U
LO Thallium	0.2600	U

ORS00501

LO Acetone	6.0000	UJ
LO Chromium	0.6200	B
LO Thallium	0.2600	U

ORS00601

LO Acetone	5.0000	UJ
HI Di-n-butylphthalate	1000.0000	UJ
LO Di-n-octylphthalate	260.0000	J

ORS00701

HI Beryllium	0.0500	U
LO Di-n-octylphthalate	200.0000	J
HI MCPA	45000.0000	U
HI MCPP	45000.0000	U
HI Selenium	0.5700	B

ORS00801

HI Calcium	40800.0000	
HI Magnesium	325.0000	B

ORS00901

HI 1,2,4-Trichlorobenzene	1500.0000	U
HI 1,2-Dichlorobenzene	1500.0000	U
HI 1,3-Dichlorobenzene	1500.0000	U
HI 1,4-Dichlorobenzene	1500.0000	U
HI 2,2'-oxybis(1-Chloropropane)	1500.0000	U
HI 2,4,5-T	44.0000	U
HI 2,4,5-Trichlorophenol	3700.0000	U
HI 2,4,6-Trichlorophenol	1500.0000	U
HI 2,4-D	220.0000	U
HI 2,4-DB	220.0000	U
HI 2,4-DP (Dichloroprop)	220.0000	U
HI 2,4-Dichlorophenol	1500.0000	U
HI 2,4-Dimethylphenol	1500.0000	U
HI 2,4-Dinitrophenol	3700.0000	U
HI 2,4-Dinitrotoluene	1500.0000	U
HI 2,6-Dinitrotoluene	1500.0000	U
HI 2-Chloronaphthalene	1500.0000	U
HI 2-Chlorophenol	1500.0000	U
HI 2-Methylnaphthalene	1500.0000	U
HI 2-Methylphenol	1500.0000	U
HI 2-Nitroaniline	3700.0000	U
HI 2-Nitrophenol	1500.0000	U
HI 3,3'-Dichlorobenzidine	1500.0000	U
HI 3-Nitroaniline	3700.0000	U
HI 4,4'-DDD	150.0000	U
HI 4,4'-DDE	150.0000	U
HI 4,4'-DDT	150.0000	U
HI 4,6-Dinitro-2-methylphenol	3700.0000	U

HI	4-Bromophenyl-phenylether	1500.0000	U
HI	4-Chloro-3-methylphenol	1500.0000	U
HI	4-Chloroaniline	1500.0000	U
HI	4-Chlorophenyl-phenylether	1500.0000	U
HI	4-Methylphenol	1500.0000	U
HI	4-Nitroaniline	3700.0000	U
HI	4-Nitrophenol	3700.0000	U
HI	Acenaphthene	1500.0000	U
HI	Acenaphthylene	1500.0000	U
HI	Aldrin	76.0000	U
HI	Anthracene	1500.0000	U
HI	Aroclor-1016	1500.0000	U
HI	Aroclor-1221	3000.0000	U
HI	Aroclor-1232	1500.0000	U
HI	Aroclor-1242	1500.0000	U
HI	Aroclor-1248	1500.0000	U
HI	Aroclor-1254	1500.0000	U
HI	Aroclor-1260	1500.0000	U
HI	Benzo(a)anthracene	3000.0000	
HI	Benzo(a)pyrene	5500.0000	
HI	Benzo(b)fluoranthene	5900.0000	
HI	Benzo(g,h,i)perylene	4400.0000	
HI	Benzo(k)fluoranthene	4400.0000	
HI	Beryllium	0.0500	B
HI	Butylbenzylphthalate	1500.0000	U
HI	Carbazole	1500.0000	U
HI	Chrysene	4700.0000	
HI	Dalapon	440.0000	U
HI	Di-n-butylphthalate	1500.0000	U
HI	Di-n-octylphthalate	1500.0000	U
HI	Dibenz(a,h)anthracene	1500.0000	U
HI	Dibenzofuran	1500.0000	U
HI	Dicamba	44.0000	U
HI	Dieldrin	150.0000	U
HI	Diethylphthalate	1500.0000	U
HI	Dimethylphthalate	1500.0000	U
HI	Dinoseb	44.0000	U
HI	Endosulfan I	76.0000	U
HI	Endosulfan II	150.0000	U
HI	Endosulfan sulfate	150.0000	U
HI	Endrin	150.0000	U
HI	Endrin aldehyde	150.0000	U
HI	Endrin ketone	150.0000	U
HI	Fluoranthene	3500.0000	
HI	Fluorene	1500.0000	U
HI	Heptachlor	76.0000	U
HI	Heptachlor epoxide	76.0000	U
HI	Hexachlorobenzene	1500.0000	U
HI	Hexachlorobutadiene	1500.0000	U
HI	Hexachlorocyclopentadiene	1500.0000	U
HI	Hexachloroethane	1500.0000	U
HI	Indeno(1,2,3-cd)pyrene	4400.0000	
HI	Isophorone	1500.0000	U
HI	Methoxychlor	760.0000	U

HI	N-Nitroso-di-n-propylamine	1500.0000	U
HI	N-Nitrosodiphenylamine (1)	1500.0000	U
HI	Naphthalene	1500.0000	U
HI	Nitrobenzene	1500.0000	U
HI	Pentachlorophenol	3700.0000	U
HI	Phenanthrene	900.0000	J
HI	Phenol	1500.0000	U
HI	Pyrene	3900.0000	
HI	Silvex (2,4,5-TP)	44.0000	U
HI	Toxaphene	7600.0000	U
HI	alpha-BHC	76.0000	U
HI	alpha-Chlordane	41.0000	J
HI	beta-BHC	76.0000	U
HI	bis(2-Chloroethoxy)methane	1500.0000	U
HI	bis(2-Chloroethyl)ether	1500.0000	U
HI	bis(2-Ethylhexyl)phthalate	1500.0000	U
HI	delta-BHC	76.0000	U
HI	gamma-BHC (Lindane)	76.0000	U
HI	gamma-Chlordane	39.0000	J
ORS01001			
HI	Cadmium	0.5700	B
HI	Calcium	40400.0000	
HI	Magnesium	408.0000	B
HI	Sodium	16.0000	B
LO	Toluene	2.0000	J
ORS01101			
LO	Toluene	4.0000	J
ORS01201D			
LO	Toluene	2.0000	J
ORS01301			
HI	Barium	10.0000	B
ORS01401			
HI	Cadmium	0.7800	B
ORS01501			
HI	Cadmium	1.1000	B
HI	Copper	3.1000	B
HI	Lead	23.2000	
HI	Mercury	0.0800	
HI	Silver	1.3000	B
LO	Toluene	2.0000	J
HI	Zinc	31.5000	
ORS01601			
HI	4,4'-DDD	180.0000	U
HI	4,4'-DDE	180.0000	U
HI	4,4'-DDT	180.0000	U
LO	Acenaphthene	260.0000	J
HI	Aldrin	94.0000	U

HI	Aluminum	5180.0000	
HI	Anthracene	600.0000	
HI	Aroclor-1016	1800.0000	U
HI	Aroclor-1221	3700.0000	U
HI	Aroclor-1232	1800.0000	U
HI	Aroclor-1242	1800.0000	U
HI	Aroclor-1248	1800.0000	U
HI	Aroclor-1254	1800.0000	U
HI	Aroclor-1260	1800.0000	U
HI	Barium	44.3000	
HI	Benzo(a)anthracene	6800.0000	E
HI	Benzo(a)pyrene	7500.0000	E
HI	Benzo(b)fluoranthene	12000.0000	E
HI	Benzo(g,h,i)perylene	6100.0000	E
HI	Benzo(k)fluoranthene	5400.0000	E
HI	Beryllium	0.4100	B
HI	Chromium	9.3000	
HI	Chrysene	7700.0000	E
HI	Dibenz(a,h)anthracene	2400.0000	
HI	Dieldrin	180.0000	U
HI	Endosulfan I	94.0000	U
HI	Endosulfan II	180.0000	U
HI	Endosulfan sulfate	180.0000	U
HI	Endrin	180.0000	U
HI	Endrin aldehyde	180.0000	U
HI	Endrin ketone	180.0000	U
HI	Fluoranthene	9100.0000	E
LO	Fluorene	190.0000	J
HI	Heptachlor	94.0000	U
HI	Heptachlor epoxide	94.0000	U
HI	Indeno(1,2,3-cd)pyrene	6900.0000	E
HI	Lead	33.0000	
HI	Manganese	14.8000	
HI	Methoxychlor	940.0000	U
HI	Phenanthrene	2100.0000	
HI	Potassium	105.0000	B
HI	Pyrene	14000.0000	E
HI	Sodium	10.9000	B
HI	Toxaphene	9400.0000	U
HI	Vanadium	4.9000	B
HI	alpha-BHC	94.0000	U
HI	alpha-Chlordane	94.0000	U
HI	beta-BHC	94.0000	U
HI	delta-BHC	94.0000	U
HI	gamma-BHC (Lindane)	94.0000	U
HI	gamma-Chlordane	94.0000	U

ORS01601DL

HI	1,2,4-Trichlorobenzene	3800.0000	U
HI	1,2-Dichlorobenzene	3800.0000	U
HI	1,3-Dichlorobenzene	3800.0000	U
HI	1,4-Dichlorobenzene	3800.0000	U
HI	2,2'-oxybis(1-Chloropropane)	3800.0000	U
HI	2,4,5-Trichlorophenol	9500.0000	U

HI	2,4,6-Trichlorophenol	3800.0000	U
HI	2,4-Dichlorophenol	3800.0000	U
HI	2,4-Dimethylphenol	3800.0000	U
HI	2,4-Dinitrophenol	9500.0000	U
HI	2,4-Dinitrotoluene	3800.0000	U
HI	2,6-Dinitrotoluene	3800.0000	U
HI	2-Chloronaphthalene	3800.0000	U
HI	2-Chlorophenol	3800.0000	U
HI	2-Methylnaphthalene	3800.0000	U
HI	2-Methylphenol	3800.0000	U
HI	2-Nitroaniline	9500.0000	U
HI	2-Nitrophenol	3800.0000	U
HI	3,3'-Dichlorobenzidine	3800.0000	U
HI	3-Nitroaniline	9500.0000	U
HI	4,6-Dinitro-2-methylphenol	9500.0000	U
HI	4-Bromophenyl-phenylether	3800.0000	U
HI	4-Chloro-3-methylphenol	3800.0000	U
HI	4-Chloroaniline	3800.0000	U
HI	4-Chlorophenyl-phenylether	3800.0000	U
HI	4-Methylphenol	3800.0000	U
HI	4-Nitroaniline	9500.0000	U
HI	4-Nitrophenol	9500.0000	U
HI	Acenaphthene	3800.0000	U
HI	Acenaphthylene	3800.0000	U
HI	Anthracene	3800.0000	U
HI	Benzo(a)anthracene	7300.0000	D
HI	Benzo(a)pyrene	8200.0000	D
HI	Benzo(b)fluoranthene	8200.0000	D
HI	Benzo(g,h,i)perylene	5700.0000	D
HI	Benzo(k)fluoranthene	8300.0000	D
HI	Butylbenzylphthalate	3800.0000	U
HI	Carbazole	3800.0000	U
HI	Chrysene	8300.0000	D
HI	Di-n-butylphthalate	3800.0000	U
HI	Di-n-octylphthalate	3800.0000	U
HI	Dibenz(a,h)anthracene	1900.0000	JD
HI	Dibenzofuran	3800.0000	U
HI	Diethylphthalate	3800.0000	U
HI	Dimethylphthalate	3800.0000	U
HI	Fluoranthene	14000.0000	D
HI	Fluorene	3800.0000	U
HI	Hexachlorobenzene	3800.0000	U
HI	Hexachlorobutadiene	3800.0000	U
HI	Hexachlorocyclopentadiene	3800.0000	U
HI	Hexachloroethane	3800.0000	U
HI	Indeno(1,2,3-cd)pyrene	5800.0000	D
HI	Isophorone	3800.0000	U
HI	N-Nitroso-di-n-propylamine	3800.0000	U
HI	N-Nitrosodiphenylamine (1)	3800.0000	U
HI	Naphthalene	3800.0000	U
HI	Nitrobenzene	3800.0000	U
HI	Pentachlorophenol	9500.0000	U
HI	Phenanthrene	2800.0000	JD
HI	Phenol	3800.0000	U

HI	Pyrene	11000.0000	D
HI	bis(2-Chloroethoxy)methane	3800.0000	U
HI	bis(2-Chloroethyl)ether	3800.0000	U
HI	bis(2-Ethylhexyl)phthalate	3800.0000	U

Outside values - location details - Background Subsoils:

ORB00101

HI	1,1,1-Trichloroethane	25.0000	U
HI	1,1,2,2-Tetrachloroethane	25.0000	U
HI	1,1,2-Trichloroethane	25.0000	U
HI	1,1-Dichloroethane	25.0000	U
HI	1,1-Dichloroethene	25.0000	U
HI	1,2-Dichloroethane	25.0000	U
HI	1,2-Dichloroethene (total)	25.0000	U
HI	1,2-Dichloropropane	25.0000	U
HI	2-Butanone	25.0000	U
HI	2-Hexanone	25.0000	U
HI	4-Methyl-2-pentanone	25.0000	U
HI	Acetone	23.0000	UJ
HI	Aldrin	2.1000	U
HI	Benzene	25.0000	U
HI	Bromodichloromethane	25.0000	U
HI	Bromoform	25.0000	U
HI	Bromomethane	25.0000	U
HI	Carbon disulfide	25.0000	U
HI	Carbon tetrachloride	25.0000	U
HI	Chlorobenzene	25.0000	U
HI	Chloroethane	25.0000	U
HI	Chloroform	25.0000	U
HI	Chloromethane	25.0000	U
LO	Di-n-octylphthalate	170.0000	J
HI	Dibromochloromethane	25.0000	U
HI	Endosulfan I	2.1000	U
HI	Ethylbenzene	25.0000	U
HI	Heptachlor	2.1000	U
HI	Heptachlor epoxide	2.1000	U
HI	Methoxychlor	21.0000	U
HI	Methylene chloride	25.0000	U
HI	Selenium	0.8000	B
HI	Styrene	25.0000	U
HI	Tetrachloroethene	25.0000	U
HI	Toluene	25.0000	U
HI	Toxaphene	210.0000	U
HI	Trichloroethene	25.0000	U
HI	Vinyl chloride	25.0000	U
HI	Xylene (total)	25.0000	U
HI	alpha-BHC	2.1000	U
HI	alpha-Chlordane	2.1000	U
HI	beta-BHC	2.1000	U
HI	cis-1,3-Dichloropropene	25.0000	U
HI	delta-BHC	2.1000	U
HI	gamma-BHC (Lindane)	2.1000	U

HI	gamma-Chlordane	2.1000	U
HI	trans-1,3-Dichloropropene	25.0000	U

ORB00201

LO	4,4'-DDD	3.5000	U
LO	4,4'-DDE	3.5000	U
LO	4,4'-DDT	3.5000	U
LO	Aldrin	1.8000	U
LO	Aroclor-1016	35.0000	U
LO	Aroclor-1221	71.0000	U
LO	Aroclor-1232	35.0000	U
LO	Aroclor-1242	35.0000	U
LO	Aroclor-1248	35.0000	U
LO	Aroclor-1254	35.0000	U
LO	Aroclor-1260	35.0000	U
LO	Dieldrin	3.5000	U
LO	Endosulfan I	1.8000	U
LO	Endosulfan II	3.5000	U
LO	Endosulfan sulfate	3.5000	U
LO	Endrin	3.5000	U
LO	Endrin aldehyde	3.5000	U
LO	Endrin ketone	3.5000	U
LO	Heptachlor	1.8000	U
LO	Heptachlor epoxide	1.8000	U
LO	Methoxychlor	18.0000	U
LO	Thallium	0.2700	U
LO	Toxaphene	180.0000	U
HI	Zinc	0.4900	B
LO	alpha-BHC	1.8000	U
LO	alpha-Chlordane	1.8000	U
LO	beta-BHC	1.8000	U
LO	delta-BHC	1.8000	U
LO	gamma-BHC (Lindane)	1.8000	U
LO	gamma-Chlordane	1.8000	U

ORB00301

HI	Acetone	16.0000	UJ
HI	Lead	8.5000	

ORB00401

HI	Cobalt	0.7800	B
HI	Manganese	1.7000	B

ORB00601

HI	Aluminum	10300.0000	
HI	Barium	7.6000	B
HI	Beryllium	0.1000	B
HI	Di-n-butylphthalate	1500.0000	UJ
HI	Nickel	7.4000	B

ORB00601D

HI	2,4,5-T	24.0000	U
HI	2,4-D	120.0000	U
HI	2,4-DB	120.0000	U

HI	2,4-DP (Dichloroprop)	120.0000	U
LO	Acetone	6.0000	UJ
HI	Aluminum	10800.0000	
HI	Arsenic	1.5000	B
HI	Barium	11.7000	B
LO	Benzo(g,h,i)perylene	98.0000	J
HI	Beryllium	0.1000	B
HI	Dalapon	240.0000	U
HI	Dicamba	24.0000	U
HI	Dinoseb	24.0000	U
HI	Nickel	7.2000	B
HI	Selenium	0.9000	B
HI	Silvex (2,4,5-TP)	24.0000	U

ORB00701

HI	2,4,5-T	24.0000	U
HI	2,4-D	180.0000	U
HI	2,4-DB	120.0000	U
HI	2,4-DP (Dichloroprop)	120.0000	U
HI	Dalapon	240.0000	U
HI	Di-n-butylphthalate	800.0000	UJ
HI	Dicamba	24.0000	U
HI	Dinoseb	24.0000	U
HI	MCPA	48000.0000	U
HI	MCPP	48000.0000	U
HI	Silvex (2,4,5-TP)	24.0000	U

ORB00801

HI	Beryllium	0.1100	B
HI	Calcium	865.0000	B
HI	Copper	1.4000	B
LO	Di-n-octylphthalate	230.0000	J

ORB00901

HI	Iron	1810.0000	

ORB01001

LO	Acetone	5.0000	UJ
HI	Aluminum	8870.0000	
HI	Arsenic	1.5000	B
HI	Barium	10.1000	B

ORB01101

HI	Cadmium	0.8600	B
HI	Copper	0.7600	B
HI	Zinc	0.4400	B

ORB01201

LO	2,4,5-Trichlorophenol	860.0000	U
LO	2,4-Dinitrophenol	860.0000	U
LO	2-Nitroaniline	860.0000	U
LO	3-Nitroaniline	860.0000	U
HI	4,4'-DDD	17.0000	U
HI	4,4'-DDE	130.0000	

HI	4,4'-DDT	87.0000	
LO	4,6-Dinitro-2-methylphenol	860.0000	U
LO	4-Nitroaniline	860.0000	U
LO	4-Nitrophenol	860.0000	U
HI	Aldrin	8.7000	U
HI	Aroclor-1016	170.0000	U
HI	Aroclor-1221	340.0000	U
HI	Aroclor-1232	170.0000	U
HI	Aroclor-1242	170.0000	U
HI	Aroclor-1248	170.0000	U
HI	Aroclor-1254	170.0000	U
HI	Aroclor-1260	170.0000	U
LO	Cadmium	0.4300	U
HI	Dieldrin	17.0000	U
HI	Endosulfan I	8.7000	U
HI	Endosulfan II	17.0000	U
HI	Endosulfan sulfate	17.0000	U
HI	Endrin	17.0000	U
HI	Endrin aldehyde	17.0000	U
HI	Endrin ketone	17.0000	U
HI	Heptachlor	8.7000	U
HI	Heptachlor epoxide	8.7000	U
HI	Methoxychlor	87.0000	U
LO	Pentachlorophenol	860.0000	U
LO	Thallium	0.2700	U
LO	Toluene	2.0000	J
HI	Toxaphene	870.0000	U
HI	alpha-BHC	8.7000	U
HI	alpha-Chlordane	43.0000	
HI	beta-BHC	8.7000	U
HI	delta-BHC	8.7000	U
HI	gamma-BHC (Lindane)	8.7000	U
HI	gamma-Chlordane	43.0000	

ORB01301

HI	2,4,5-T	20.0000	U
LO	2,4,5-Trichlorophenol	850.0000	U
HI	2,4-D	100.0000	U
HI	2,4-DB	100.0000	U
HI	2,4-DP (Dichloroprop)	100.0000	U
LO	2,4-Dinitrophenol	850.0000	U
LO	2-Nitroaniline	850.0000	U
LO	3-Nitroaniline	850.0000	U
LO	4,4'-DDD	3.4000	U
LO	4,4'-DDE	3.4000	U
LO	4,4'-DDT	3.4000	U
LO	4,6-Dinitro-2-methylphenol	850.0000	U
LO	4-Nitroaniline	850.0000	U
LO	4-Nitrophenol	850.0000	U
LO	Aldrin	1.7000	U
LO	Aroclor-1016	34.0000	U
LO	Aroclor-1221	68.0000	U
LO	Aroclor-1232	34.0000	U
LO	Aroclor-1242	34.0000	U

LO	Aroclor-1248	34.0000	U
LO	Aroclor-1254	34.0000	U
LO	Aroclor-1260	34.0000	U
HI	Barium	8.7000	B
LO	Cadmium	0.4300	U
HI	Dalapon	200.0000	U
HI	Dicamba	20.0000	U
LO	Dieldrin	3.4000	U
HI	Dinoseb	20.0000	U
LO	Endosulfan I	1.7000	U
LO	Endosulfan II	3.4000	U
LO	Endosulfan sulfate	3.4000	U
LO	Endrin	3.4000	U
LO	Endrin aldehyde	3.4000	U
LO	Endrin ketone	3.4000	U
LO	Heptachlor	1.7000	U
LO	Heptachlor epoxide	1.7000	U
HI	Manganese	1.6000	B
LO	Methoxychlor	17.0000	U
LO	Methylene chloride	2.0000	UJ
LO	Pentachlorophenol	850.0000	U
HI	Potassium	92.4000	B
HI	Silvex (2,4,5-TP)	20.0000	U
LO	Thallium	0.2700	U
LO	Toluene	5.0000	UJ
LO	Toxaphene	170.0000	U
HI	Zinc	0.6000	B
LO	alpha-BHC	1.7000	U
LO	alpha-Chlordane	1.7000	U
LO	beta-BHC	1.7000	U
LO	delta-BHC	1.7000	U
LO	gamma-BHC (Lindane)	1.7000	U
LO	gamma-Chlordane	1.7000	U

ORB01401

LO	Aldrin	1.9000	U
HI	Cadmium	0.8900	B
LO	Endosulfan I	1.9000	U
LO	Heptachlor	1.9000	U
LO	Heptachlor epoxide	1.9000	U
LO	Methoxychlor	19.0000	U
LO	Toxaphene	190.0000	U
LO	alpha-BHC	1.9000	U
LO	alpha-Chlordane	1.9000	U
LO	beta-BHC	1.9000	U
LO	delta-BHC	1.9000	U
LO	gamma-BHC (Lindane)	1.9000	U
LO	gamma-Chlordane	1.9000	U

ORB01401D

LO	Aldrin	1.9000	U
LO	Endosulfan I	1.9000	U
LO	Heptachlor	1.9000	U
LO	Heptachlor epoxide	1.9000	U

LO	Methoxychlor	19.0000	U
LO	Toxaphene	190.0000	U
LO	alpha-BHC	1.9000	U
LO	alpha-Chlordane	1.9000	U
LO	beta-BHC	1.9000	U
LO	delta-BHC	1.9000	U
LO	gamma-BHC (Lindane)	1.9000	U
LO	gamma-Chlordane	1.9000	U

ORB01501

HI	Acetone	19.0000	UJ
HI	Copper	0.6500	B
HI	Zinc	5.1000	

ORB01601

HI	2,4,5-T	24.0000	U
HI	2,4-D	120.0000	U
HI	2,4-DB	120.0000	U
HI	2,4-DP (Dichloroprop)	120.0000	U
HI	Cadmium	0.7600	B
HI	Dalapon	240.0000	U
HI	Dicamba	24.0000	U
HI	Dinoseb	24.0000	U
LO	Fluoranthene	120.0000	J
HI	Silvex (2,4,5-TP)	24.0000	U
HI	Thallium	0.3300	U

Outside values - location details - Background Ground Water:

ORG00101		
HI Lead	1.7000	B
ORG00201		
HI Selenium	5.4000	
ORG00201D		
HI Antimony	1.9000	B
HI Selenium	4.3000	B
HI Thallium	1.9000	B
ORG00301		
HI Cadmium	2.8000	B
ORG00501		
HI Copper	3.6000	B
HI Lead	2.3000	B
HI Total Suspended Solids	21.0000	
ORG00601		
HI Chloroform	4.0000	
ORG00701		
LO Di-n-butylphthalate	2.0000	J
HI Methylene chloride	0.9000	UJ
ORG00801		
HI Carbon disulfide	5.0000	UJ
ORG00901		
HI Antimony	2.2000	B
HI Barium	71.0000	B

ORLANDO BACKGROUND OUTSIDE VALUE CHECK - SURFACE SOILS

Points used:

ORS00101
ORS00201
ORS00301
ORS00401
ORS00501
ORS00601
ORS00701
ORS00801
ORS00901
ORS01001
ORS01101
ORS01201
ORS01201D
ORS01301
ORS01401
ORS01501
ORS01601
ORS01601DL

1,1,1-TRICHLOROETHANE

Outside values relative to own group for group: bk

```
lowcut =          8.5000
lq     =         10.0000 U
median =         11.0000 U
uq     =         11.0000 U
hicut  =         12.5000
 Lower outside values:
<< NONE FOUND>>
 Upper outside values:
<< NONE FOUND>>
```

1,1,2,2-TETRACHLOROETHANE

Outside values relative to own group for group: bk

```
lowcut =          8.5000
lq     =         10.0000 U
median =         11.0000 U
uq     =         11.0000 U
hicut  =         12.5000
 Lower outside values:
<< NONE FOUND>>
 Upper outside values:
<< NONE FOUND>>
```

1,1,2-TRICHLOROETHANE

Outside values relative to own group for group: bk

```
lowcut =          8.5000
lq     =         10.0000 U
median =         11.0000 U
uq     =         11.0000 U
hicut  =         12.5000
 Lower outside values:
<< NONE FOUND>>
 Upper outside values:
<< NONE FOUND>>
```

1,1-DICHLOROETHANE

Outside values relative to own group for group: bk

```
lowcut =          8.5000
lq     =         10.0000 U
median =         11.0000 U
uq     =         11.0000 U
```

```
hicut  =          12.5000
 Lower outside values:
<< NONE FOUND>>
 Upper outside values:
<< NONE FOUND>>
```

1,1-DICHLOROETHENE

```
Outside values relative to own group for group: bk
-------------------------------------------------------
lowcut =           8.5000
lq     =          10.0000 U
median =          11.0000 U
uq     =          11.0000 U
hicut  =          12.5000
 Lower outside values:
<< NONE FOUND>>
 Upper outside values:
<< NONE FOUND>>
```

1,2,4-TRICHLOROBENZENE

```
Outside values relative to own group for group: bk
-------------------------------------------------------
lowcut =         295.0000
lq     =         340.0000 U
median =         350.0000 U
uq     =         370.0000 U
hicut  =         415.0000
 Lower outside values:
<< NONE FOUND>>
 Upper outside values:
 U    1500.0000 ORS00901
 U    3800.0000 ORS01601DL
```

1,2-DIBROMO-3-CHLOROPROPANE

1,2-DIBROMOETHANE

1,2-DICHLOROBENZENE

```
Outside values relative to own group for group: bk
-----------------------------------------------------
lowcut =          295.0000
lq     =          340.0000 U
median =          350.0000 U
uq     =          370.0000 U
hicut  =          415.0000
 Lower outside values:
<< NONE FOUND>>
 Upper outside values:
 U    1500.0000 ORS00901
 U    3800.0000 ORS01601DL
```

1,2-DICHLOROETHANE

```
Outside values relative to own group for group: bk
-----------------------------------------------------
lowcut =            8.5000
lq     =           10.0000 U
median =           11.0000 U
uq     =           11.0000 U
hicut  =           12.5000
 Lower outside values:
<< NONE FOUND>>
 Upper outside values:
<< NONE FOUND>>
```

1,2-DICHLOROETHENE (TOTAL)

```
Outside values relative to own group for group: bk
-----------------------------------------------------
lowcut =            8.5000
lq     =           10.0000 U
median =           11.0000 U
uq     =           11.0000 U
hicut  =           12.5000
 Lower outside values:
<< NONE FOUND>>
 Upper outside values:
<< NONE FOUND>>
```

1,2-DICHLOROPROPANE

```
Outside values relative to own group for group: bk
-----------------------------------------------------
lowcut =            8.5000
lq     =           10.0000 U
median =           11.0000 U
uq     =           11.0000 U
hicut  =           12.5000
 Lower outside values:
<< NONE FOUND>>
 Upper outside values:
```

<< NONE FOUND>>

1,3-DICHLOROBENZENE

Outside values relative to own group for group: bk

```
lowcut =         295.0000
lq     =         340.0000 U
median =         350.0000 U
uq     =         370.0000 U
hicut  =         415.0000
 Lower outside values:
<< NONE FOUND>>
 Upper outside values:
 U    1500.0000 ORS00901
 U    3800.0000 ORS01601DL
```

1,4-DICHLOROBENZENE

Outside values relative to own group for group: bk

```
lowcut =         295.0000
lq     =         340.0000 U
median =         350.0000 U
uq     =         370.0000 U
hicut  =         415.0000
 Lower outside values:
<< NONE FOUND>>
 Upper outside values:
 U    1500.0000 ORS00901
 U    3800.0000 ORS01601DL
```

2,2'-OXYBIS(1-CHLOROPROPANE)

Outside values relative to own group for group: bk

```
lowcut =         295.0000
lq     =         340.0000 U
median =         350.0000 U
uq     =         370.0000 U
hicut  =         415.0000
 Lower outside values:
<< NONE FOUND>>
 Upper outside values:
 U    1500.0000 ORS00901
 U    3800.0000 ORS01601DL
```

```
 2,4,5-T
-----------------------------


Outside values relative to own group for group: bk
-------------------------------------------------------
lowcut =          -4.0000
lq     =          11.0000 U
median =          20.0000 U
uq     =          21.0000 U
hicut  =          36.0000
 Lower outside values:
<< NONE FOUND>>
 Upper outside values:
 U      44.0000 ORS00901




-----------------------------------------------------------------
 2,4,5-TRICHLOROPHENOL
-----------------------------


Outside values relative to own group for group: bk
-------------------------------------------------------
lowcut =         770.0000
lq     =         860.0000 U
median =         890.0000 U
uq     =         920.0000 U
hicut  =        1010.0000
 Lower outside values:
<< NONE FOUND>>
 Upper outside values:
 U    3700.0000 ORS00901
 U    9500.0000 ORS01601DL




-----------------------------------------------------------------
 2,4,6-TRICHLOROPHENOL
-----------------------------


Outside values relative to own group for group: bk
-------------------------------------------------------
lowcut =         295.0000
lq     =         340.0000 U
median =         350.0000 U
uq     =         370.0000 U
hicut  =         415.0000
 Lower outside values:
<< NONE FOUND>>
 Upper outside values:
 U    1500.0000 ORS00901
 U    3800.0000 ORS01601DL




-----------------------------------------------------------------
 2,4-D
-----------------------------


Outside values relative to own group for group: bk
-------------------------------------------------------
lowcut =         -25.0000
```

```
lq     =          56.0000 U
median =         100.0000 U
uq     =         110.0000 U
hicut  =         191.0000
 Lower outside values:
<< NONE FOUND>>
 Upper outside values:
 U     200.0000 ORS00101
 U     200.0000 ORS00401
 U     210.0000 ORS00301
 U     220.0000 ORS00901
```

2,4-DB

```
Outside values relative to own group for group: bk
-----------------------------------------------------
lowcut =         -32.5000
lq     =          53.0000 U
median =         100.0000 U
uq     =         110.0000 U
hicut  =         195.5000
 Lower outside values:
<< NONE FOUND>>
 Upper outside values:
 U     220.0000 ORS00901
```

2,4-DP (DICHLOROPROP)

```
Outside values relative to own group for group: bk
-----------------------------------------------------
lowcut =         -32.5000
lq     =          53.0000 U
median =         100.0000 U
uq     =         110.0000 U
hicut  =         195.5000
 Lower outside values:
<< NONE FOUND>>
 Upper outside values:
 U     220.0000 ORS00901
```

2,4-DICHLOROPHENOL

```
Outside values relative to own group for group: bk
-----------------------------------------------------
lowcut =         295.0000
lq     =         340.0000 U
median =         350.0000 U
uq     =         370.0000 U
hicut  =         415.0000
 Lower outside values:
<< NONE FOUND>>
```

```
 Upper outside values:
 U    1500.0000 ORS00901
 U    3800.0000 ORS01601DL
```

2,4-DIMETHYLPHENOL

```
Outside values relative to own group for group: bk
-------------------------------------------------------
lowcut =         295.0000
lq     =         340.0000 U
median =         350.0000 U
uq     =         370.0000 U
hicut  =         415.0000
 Lower outside values:
<< NONE FOUND>>
 Upper outside values:
 U    1500.0000 ORS00901
 U    3800.0000 ORS01601DL
```

2,4-DINITROPHENOL

```
Outside values relative to own group for group: bk
-------------------------------------------------------
lowcut =         770.0000
lq     =         860.0000 U
median =         890.0000 U
uq     =         920.0000 U
hicut  =        1010.0000
 Lower outside values:
<< NONE FOUND>>
 Upper outside values:
 U    3700.0000 ORS00901
 U    9500.0000 ORS01601DL
```

2,4-DINITROTOLUENE

```
Outside values relative to own group for group: bk
-------------------------------------------------------
lowcut =         295.0000
lq     =         340.0000 U
median =         350.0000 U
uq     =         370.0000 U
hicut  =         415.0000
 Lower outside values:
<< NONE FOUND>>
 Upper outside values:
 U    1500.0000 ORS00901
 U    3800.0000 ORS01601DL
```

2,6-DINITROTOLUENE

Outside values relative to own group for group: bk

```
lowcut =          295.0000
lq     =          340.0000 U
median =          350.0000 U
uq     =          370.0000 U
hicut  =          415.0000
 Lower outside values:
<< NONE FOUND>>
 Upper outside values:
 U     1500.0000 ORS00901
 U     3800.0000 ORS01601DL
```

2-BUTANONE

Outside values relative to own group for group: bk

```
lowcut =            8.5000
lq     =           10.0000 U
median =           11.0000 U
uq     =           11.0000 U
hicut  =           12.5000
 Lower outside values:
<< NONE FOUND>>
 Upper outside values:
<< NONE FOUND>>
```

2-CHLORONAPHTHALENE

Outside values relative to own group for group: bk

```
lowcut =          295.0000
lq     =          340.0000 U
median =          350.0000 U
uq     =          370.0000 U
hicut  =          415.0000
 Lower outside values:
<< NONE FOUND>>
 Upper outside values:
 U     1500.0000 ORS00901
 U     3800.0000 ORS01601DL
```

2-CHLOROPHENOL

Outside values relative to own group for group: bk

```
-------------------------------------------------------
lowcut =          295.0000
lq     =          340.0000 U
median =          350.0000 U
uq     =          370.0000 U
hicut  =          415.0000
 Lower outside values:
<< NONE FOUND>>
 Upper outside values:
 U    1500.0000 ORS00901
 U    3800.0000 ORS01601DL
```

```
-----------------------------------------------------------------
 2-HEXANONE
------------------------------

Outside values relative to own group for group: bk
-------------------------------------------------------
lowcut =            8.5000
lq     =           10.0000 U
median =           11.0000 U
uq     =           11.0000 U
hicut  =           12.5000
 Lower outside values:
<< NONE FOUND>>
 Upper outside values:
<< NONE FOUND>>
```

```
-----------------------------------------------------------------
 2-METHYLNAPHTHALENE
-----------------------------

Outside values relative to own group for group: bk
-------------------------------------------------------
lowcut =          295.0000
lq     =          340.0000 U
median =          350.0000 U
uq     =          370.0000 U
hicut  =          415.0000
 Lower outside values:
<< NONE FOUND>>
 Upper outside values:
 U    1500.0000 ORS00901
 U    3800.0000 ORS01601DL
```

```
-----------------------------------------------------------------
 2-METHYLPHENOL
------------------------------

Outside values relative to own group for group: bk
-------------------------------------------------------
lowcut =          295.0000
lq     =          340.0000 U
median =          350.0000 U
uq     =          370.0000 U
hicut  =          415.0000
 Lower outside values:
<< NONE FOUND>>
```

```
 Upper outside values:
 U    1500.0000 ORS00901
 U    3800.0000 ORS01601DL
```

2-NITROANILINE

```
Outside values relative to own group for group: bk
-----------------------------------------------------
lowcut =         770.0000
lq     =         860.0000 U
median =         890.0000 U
uq     =         920.0000 U
hicut  =        1010.0000
 Lower outside values:
<< NONE FOUND>>
 Upper outside values:
 U    3700.0000 ORS00901
 U    9500.0000 ORS01601DL
```

2-NITROPHENOL

```
Outside values relative to own group for group: bk
-----------------------------------------------------
lowcut =         295.0000
lq     =         340.0000 U
median =         350.0000 U
uq     =         370.0000 U
hicut  =         415.0000
 Lower outside values:
<< NONE FOUND>>
 Upper outside values:
 U    1500.0000 ORS00901
 U    3800.0000 ORS01601DL
```

3,3'-DICHLOROBENZIDINE

```
Outside values relative to own group for group: bk
-----------------------------------------------------
lowcut =         295.0000
lq     =         340.0000 U
median =         350.0000 U
uq     =         370.0000 U
hicut  =         415.0000
 Lower outside values:
<< NONE FOUND>>
 Upper outside values:
 U    1500.0000 ORS00901
 U    3800.0000 ORS01601DL
```

3-NITROANILINE

Outside values relative to own group for group: bk

```
lowcut =         770.0000
lq     =         860.0000 U
median =         890.0000 U
uq     =         920.0000 U
hicut  =        1010.0000
 Lower outside values:
<< NONE FOUND>>
 Upper outside values:
 U    3700.0000 ORS00901
 U    9500.0000 ORS01601DL
```

4,4'-DDD

Outside values relative to own group for group: bk

```
lowcut =          -2.4500
lq     =           3.4000 U
median =           3.5000 U
uq     =           7.3000 U
hicut  =          13.1500
 Lower outside values:
<< NONE FOUND>>
 Upper outside values:
 U      17.0000 ORS00101
 U     150.0000 ORS00901
 U     180.0000 ORS01601
```

4,4'-DDE

Outside values relative to own group for group: bk

```
lowcut =          -8.0000
lq     =           3.4000 U
median =           3.7000 U
uq     =          11.0000
hicut  =          22.4000
 Lower outside values:
<< NONE FOUND>>
 Upper outside values:
       130.0000 ORS00101
 U     150.0000 ORS00901
 U     180.0000 ORS01601
```

4,4'-DDT

```
-----------------------------

Outside values relative to own group for group: bk
-------------------------------------------------------
lowcut =          -6.5000
lq     =           3.4000 U
median =           3.7000 U
uq     =          10.0000
hicut  =          19.9000
 Lower outside values:
<< NONE FOUND>>
 Upper outside values:
 J      62.0000 ORS00101
 U     150.0000 ORS00901
 U     180.0000 ORS01601


-----------------------------------------------------------------
 4,6-DINITRO-2-METHYLPHENOL
-----------------------------

Outside values relative to own group for group: bk
-------------------------------------------------------
lowcut =         770.0000
lq     =         860.0000 U
median =         890.0000 U
uq     =         920.0000 U
hicut  =        1010.0000
 Lower outside values:
<< NONE FOUND>>
 Upper outside values:
 U    3700.0000 ORS00901
 U    9500.0000 ORS01601DL


-----------------------------------------------------------------
 4-BROMOPHENYL-PHENYLETHER
-----------------------------

Outside values relative to own group for group: bk
-------------------------------------------------------
lowcut =         295.0000
lq     =         340.0000 U
median =         350.0000 U
uq     =         370.0000 U
hicut  =         415.0000
 Lower outside values:
<< NONE FOUND>>
 Upper outside values:
 U    1500.0000 ORS00901
 U    3800.0000 ORS01601DL


-----------------------------------------------------------------
 4-CHLORO-3-METHYLPHENOL
-----------------------------

Outside values relative to own group for group: bk
-------------------------------------------------------
```

```
lowcut =          295.0000
lq     =          340.0000 U
median =          350.0000 U
uq     =          370.0000 U
hicut  =          415.0000
 Lower outside values:
<< NONE FOUND>>
 Upper outside values:
 U    1500.0000 ORS00901
 U    3800.0000 ORS01601DL
```

4-CHLOROANILINE

```
Outside values relative to own group for group: bk
-------------------------------------------------------
lowcut =          295.0000
lq     =          340.0000 U
median =          350.0000 U
uq     =          370.0000 U
hicut  =          415.0000
 Lower outside values:
<< NONE FOUND>>
 Upper outside values:
 U    1500.0000 ORS00901
 U    3800.0000 ORS01601DL
```

4-CHLOROPHENYL-PHENYLETHER

```
Outside values relative to own group for group: bk
-------------------------------------------------------
lowcut =          295.0000
lq     =          340.0000 U
median =          350.0000 U
uq     =          370.0000 U
hicut  =          415.0000
 Lower outside values:
<< NONE FOUND>>
 Upper outside values:
 U    1500.0000 ORS00901
 U    3800.0000 ORS01601DL
```

4-METHYL-2-PENTANONE

```
Outside values relative to own group for group: bk
-------------------------------------------------------
lowcut =            8.5000
lq     =           10.0000 U
median =           11.0000 U
uq     =           11.0000 U
hicut  =           12.5000
 Lower outside values:
```

```
<< NONE FOUND>>
 Upper outside values:
<< NONE FOUND>>
```

4-METHYLPHENOL

```
Outside values relative to own group for group: bk
-------------------------------------------------------
lowcut =         295.0000
lq     =         340.0000 U
median =         350.0000 U
uq     =         370.0000 U
hicut  =         415.0000
 Lower outside values:
<< NONE FOUND>>
 Upper outside values:
 U    1500.0000 ORS00901
 U    3800.0000 ORS01601DL
```

4-NITROANILINE

```
Outside values relative to own group for group: bk
-------------------------------------------------------
lowcut =         770.0000
lq     =         860.0000 U
median =         890.0000 U
uq     =         920.0000 U
hicut  =        1010.0000
 Lower outside values:
<< NONE FOUND>>
 Upper outside values:
 U    3700.0000 ORS00901
 U    9500.0000 ORS01601DL
```

4-NITROPHENOL

```
Outside values relative to own group for group: bk
-------------------------------------------------------
lowcut =         770.0000
lq     =         860.0000 U
median =         890.0000 U
uq     =         920.0000 U
hicut  =        1010.0000
 Lower outside values:
<< NONE FOUND>>
 Upper outside values:
 U    3700.0000 ORS00901
 U    9500.0000 ORS01601DL
```

ACENAPHTHENE

Outside values relative to own group for group: bk

```
lowcut =         310.0000
lq     =         340.0000 U
median =         350.0000 U
uq     =         360.0000 U
hicut  =         390.0000
 Lower outside values:
 J     260.0000 ORS01601

 Upper outside values:
 U    1500.0000 ORS00901
 U    3800.0000 ORS01601DL
```

ACENAPHTHYLENE

Outside values relative to own group for group: bk

```
lowcut =         295.0000
lq     =         340.0000 U
median =         350.0000 U
uq     =         370.0000 U
hicut  =         415.0000
 Lower outside values:
<< NONE FOUND>>
 Upper outside values:
 U    1500.0000 ORS00901
 U    3800.0000 ORS01601DL
```

ACETONE

Outside values relative to own group for group: bk

```
lowcut =           8.5000
lq     =          10.0000 U
median =          11.0000 U
uq     =          11.0000 U
hicut  =          12.5000
 Lower outside values:
 UJ      5.0000 ORS00601
 UJ      6.0000 ORS00501

 Upper outside values:
 UJ     13.0000 ORS00301
```

ACTINIUM-228

```
-----------------------------------------------------------------
 ALDRIN
-----------------------------

Outside values relative to own group for group: bk
-------------------------------------------------------
lowcut =          -1.0500
lq     =           1.8000 U
median =           1.8000 U
uq     =           3.7000 U
hicut  =           6.5500
 Lower outside values:
<< NONE FOUND>>
 Upper outside values:
 U       8.7000 ORS00101
 U      76.0000 ORS00901
 U      94.0000 ORS01601
```

```
-----------------------------------------------------------------
 ALKALINITY AS CACO3
-----------------------------
```

```
-----------------------------------------------------------------
 ALUMINUM
-----------------------------

Outside values relative to own group for group: bk
-------------------------------------------------------
lowcut =          30.0000
lq     =        1020.0000
median =        1470.0000
uq     =        1680.0000
hicut  =        2670.0000
 Lower outside values:
<< NONE FOUND>>
 Upper outside values:
      5180.0000 ORS01601
```

```
-----------------------------------------------------------------
 ANTHRACENE
-----------------------------

Outside values relative to own group for group: bk
-------------------------------------------------------
lowcut =         295.0000
lq     =         340.0000 U
median =         350.0000 U
uq     =         370.0000 U
hicut  =         415.0000
 Lower outside values:
<< NONE FOUND>>
 Upper outside values:
```

```
      600.0000 ORS01601
 U    1500.0000 ORS00901
 U    3800.0000 ORS01601DL
```

ANTIMONY

Outside values relative to own group for group: bk

```
lowcut =          4.5500
lq     =          5.0000 U
median =          5.1000 U
uq     =          5.3000 U
hicut  =          5.7500
 Lower outside values:
<< NONE FOUND>>
 Upper outside values:
<< NONE FOUND>>
```

AROCLOR-1016

Outside values relative to own group for group: bk

```
lowcut =        -24.5000
lq     =         34.0000 U
median =         35.0000 U
uq     =         73.0000 U
hicut  =        131.5000
 Lower outside values:
<< NONE FOUND>>
 Upper outside values:
 U     170.0000 ORS00101
 U    1500.0000 ORS00901
 U    1800.0000 ORS01601
```

AROCLOR-1221

Outside values relative to own group for group: bk

```
lowcut =        -52.5000
lq     =         69.0000 U
median =         71.0000 U
uq     =        150.0000 U
hicut  =        271.5000
 Lower outside values:
<< NONE FOUND>>
 Upper outside values:
 U     340.0000 ORS00101
 U    3000.0000 ORS00901
 U    3700.0000 ORS01601
```

```
-----------------------------------------------------------------
 AROCLOR-1232
------------------------------


Outside values relative to own group for group: bk
-------------------------------------------------------
lowcut =          -24.5000
lq     =           34.0000 U
median =           35.0000 U
uq     =           73.0000 U
hicut  =          131.5000
 Lower outside values:
<< NONE FOUND>>
 Upper outside values:
 U     170.0000 ORS00101
 U    1500.0000 ORS00901
 U    1800.0000 ORS01601




-----------------------------------------------------------------
 AROCLOR-1242
------------------------------


Outside values relative to own group for group: bk
-------------------------------------------------------
lowcut =          -24.5000
lq     =           34.0000 U
median =           35.0000 U
uq     =           73.0000 U
hicut  =          131.5000
 Lower outside values:
<< NONE FOUND>>
 Upper outside values:
 U     170.0000 ORS00101
 U    1500.0000 ORS00901
 U    1800.0000 ORS01601




-----------------------------------------------------------------
 AROCLOR-1248
------------------------------


Outside values relative to own group for group: bk
-------------------------------------------------------
lowcut =          -24.5000
lq     =           34.0000 U
median =           35.0000 U
uq     =           73.0000 U
hicut  =          131.5000
 Lower outside values:
<< NONE FOUND>>
 Upper outside values:
 U     170.0000 ORS00101
 U    1500.0000 ORS00901
 U    1800.0000 ORS01601



-----------------------------------------------------------------
```

AROCLOR-1254

Outside values relative to own group for group: bk

```
lowcut =          -24.5000
lq     =           34.0000 U
median =           35.0000 U
uq     =           73.0000 U
hicut  =          131.5000
 Lower outside values:
<< NONE FOUND>>
 Upper outside values:
 U      170.0000 ORS00101
 U     1500.0000 ORS00901
 U     1800.0000 ORS01601
```

AROCLOR-1260

Outside values relative to own group for group: bk

```
lowcut =          -27.5000
lq     =           34.0000 U
median =           35.0000 U
uq     =           75.0000 U
hicut  =          136.5000
 Lower outside values:
<< NONE FOUND>>
 Upper outside values:
 U      170.0000 ORS00101
 U     1500.0000 ORS00901
 U     1800.0000 ORS01601
```

ARSENIC

Outside values relative to own group for group: bk

```
lowcut =           -0.2250
lq     =            0.3900 B
median =            0.5900 B
uq     =            0.8000 B
hicut  =            1.4150
 Lower outside values:
<< NONE FOUND>>
 Upper outside values:
<< NONE FOUND>>
```

BARIUM

Outside values relative to own group for group: bk

```
lowcut =          -0.3000
lq     =           2.7000 B
median =           3.7000 B
uq     =           4.7000 B
hicut  =           7.7000
 Lower outside values:
<< NONE FOUND>>
 Upper outside values:
 B       8.7000 ORS00201
 B      10.0000 ORS01301
        44.3000 ORS01601
```

BENZENE

Outside values relative to own group for group: bk

```
lowcut =           8.5000
lq     =          10.0000 U
median =          11.0000 U
uq     =          11.0000 U
hicut  =          12.5000
 Lower outside values:
<< NONE FOUND>>
 Upper outside values:
<< NONE FOUND>>
```

BENZO(A)ANTHRACENE

Outside values relative to own group for group: bk

```
lowcut =         295.0000
lq     =         340.0000 U
median =         350.0000 U
uq     =         370.0000 U
hicut  =         415.0000
 Lower outside values:
<< NONE FOUND>>
 Upper outside values:
      3000.0000 ORS00901
 E    6800.0000 ORS01601
 D    7300.0000 ORS01601DL
```

BENZO(A)PYRENE

Outside values relative to own group for group: bk

```
lowcut =         295.0000
lq     =         340.0000 U
median =         350.0000 U
uq     =         370.0000 U
hicut  =         415.0000
 Lower outside values:
```

```
<< NONE FOUND>>
 Upper outside values:
      5500.0000 ORS00901
 E    7500.0000 ORS01601
 D    8200.0000 ORS01601DL
```

BENZO(B)FLUORANTHENE

```
Outside values relative to own group for group: bk
-----------------------------------------------------
lowcut =         295.0000
lq     =         340.0000 U
median =         350.0000 U
uq     =         370.0000 U
hicut  =         415.0000
 Lower outside values:
<< NONE FOUND>>
 Upper outside values:
      5900.0000 ORS00901
 D    8200.0000 ORS01601DL
 E   12000.0000 ORS01601
```

BENZO(G,H,I)PERYLENE

```
Outside values relative to own group for group: bk
-----------------------------------------------------
lowcut =         295.0000
lq     =         340.0000 U
median =         350.0000 U
uq     =         370.0000 U
hicut  =         415.0000
 Lower outside values:
 J      91.0000 ORS00301
 J     110.0000 ORS00201

 Upper outside values:
      4400.0000 ORS00901
 D    5700.0000 ORS01601DL
 E    6100.0000 ORS01601
```

BENZO(K)FLUORANTHENE

```
Outside values relative to own group for group: bk
-----------------------------------------------------
lowcut =         295.0000
lq     =         340.0000 U
median =         350.0000 U
uq     =         370.0000 U
hicut  =         415.0000
 Lower outside values:
<< NONE FOUND>>
```

```
 Upper outside values:
      4400.0000 ORS00901
 E    5400.0000 ORS01601
 D    8300.0000 ORS01601DL
```

BERYLLIUM

```
Outside values relative to own group for group: bk
-------------------------------------------------------
lowcut =           0.0400
lq     =           0.0400 U
median =           0.0400 U
uq     =           0.0400 B
hicut  =           0.0400
 Lower outside values:
<< NONE FOUND>>
 Upper outside values:
 U       0.0500 ORS00701
 B       0.0500 ORS00201
 B       0.0500 ORS00901
 B       0.4100 ORS01601
```

BISMUTH-212

BISMUTH-214

BROMOCHLOROMETHANE

BROMODICHLOROMETHANE

```
Outside values relative to own group for group: bk
-------------------------------------------------------
lowcut =           8.5000
lq     =          10.0000 U
median =          11.0000 U
uq     =          11.0000 U
hicut  =          12.5000
 Lower outside values:
<< NONE FOUND>>
 Upper outside values:
```

<< NONE FOUND>>

BROMOFORM

Outside values relative to own group for group: bk

```
lowcut =          8.5000
lq     =         10.0000 U
median =         11.0000 U
uq     =         11.0000 U
hicut  =         12.5000
 Lower outside values:
<< NONE FOUND>>
 Upper outside values:
<< NONE FOUND>>
```

BROMOMETHANE

Outside values relative to own group for group: bk

```
lowcut =          8.5000
lq     =         10.0000 U
median =         11.0000 U
uq     =         11.0000 U
hicut  =         12.5000
 Lower outside values:
<< NONE FOUND>>
 Upper outside values:
<< NONE FOUND>>
```

BUTYLBENZYLPHTHALATE

Outside values relative to own group for group: bk

```
lowcut =        295.0000
lq     =        340.0000 U
median =        350.0000 U
uq     =        370.0000 U
hicut  =        415.0000
 Lower outside values:
<< NONE FOUND>>
 Upper outside values:
 U    1500.0000 ORS00901
 U    3800.0000 ORS01601DL
```

CADMIUM

```
Outside values relative to own group for group: bk
-----------------------------------------------------
lowcut =           0.3650
lq     =           0.4400 U
median =           0.4600 U
uq     =           0.4900 B
hicut  =           0.5650
 Lower outside values:
<< NONE FOUND>>
 Upper outside values:
 B       0.5700 ORS01001
 B       0.7800 ORS01401
 B       1.1000 ORS01501
```

CALCIUM

```
Outside values relative to own group for group: bk
-----------------------------------------------------
lowcut =       -8477.5000
lq     =         293.0000 B
median =         816.0000 B
uq     =        6140.0000
hicut  =       14910.5000
 Lower outside values:
<< NONE FOUND>>
 Upper outside values:
     40400.0000 ORS01001
     40800.0000 ORS00801
    124000.0000 ORS00201
```

CARBAZOLE

```
Outside values relative to own group for group: bk
-----------------------------------------------------
lowcut =         310.0000
lq     =         340.0000 U
median =         350.0000 U
uq     =         360.0000 U
hicut  =         390.0000
 Lower outside values:
<< NONE FOUND>>
 Upper outside values:
 U    1500.0000 ORS00901
 U    3800.0000 ORS01601DL
```

CARBON DISULFIDE

```
Outside values relative to own group for group: bk
-----------------------------------------------------
lowcut =           8.5000
lq     =          10.0000 U
```

```
median =          11.0000 U
uq     =          11.0000 U
hicut  =          12.5000
 Lower outside values:
<< NONE FOUND>>
 Upper outside values:
<< NONE FOUND>>
```

CARBON TETRACHLORIDE

```
Outside values relative to own group for group: bk
-------------------------------------------------------
lowcut =           8.5000
lq     =          10.0000 U
median =          11.0000 U
uq     =          11.0000 U
hicut  =          12.5000
 Lower outside values:
<< NONE FOUND>>
 Upper outside values:
<< NONE FOUND>>
```

CESIUM-137

CHLOROBENZENE

```
Outside values relative to own group for group: bk
-------------------------------------------------------
lowcut =           8.5000
lq     =          10.0000 U
median =          11.0000 U
uq     =          11.0000 U
hicut  =          12.5000
 Lower outside values:
<< NONE FOUND>>
 Upper outside values:
<< NONE FOUND>>
```

CHLOROETHANE

```
Outside values relative to own group for group: bk
-------------------------------------------------------
lowcut =           8.5000
lq     =          10.0000 U
median =          11.0000 U
uq     =          11.0000 U
hicut  =          12.5000
 Lower outside values:
```

```
<< NONE FOUND>>
 Upper outside values:
<< NONE FOUND>>



-----------------------------------------------------------------
 CHLOROFORM
------------------------------


Outside values relative to own group for group: bk
-------------------------------------------------------
lowcut =           8.5000
lq     =          10.0000 U
median =          11.0000 U
uq     =          11.0000 U
hicut  =          12.5000
 Lower outside values:
<< NONE FOUND>>
 Upper outside values:
<< NONE FOUND>>



-----------------------------------------------------------------
 CHLOROMETHANE
------------------------------


Outside values relative to own group for group: bk
-------------------------------------------------------
lowcut =           8.5000
lq     =          10.0000 U
median =          11.0000 U
uq     =          11.0000 U
hicut  =          12.5000
 Lower outside values:
<< NONE FOUND>>
 Upper outside values:
<< NONE FOUND>>



-----------------------------------------------------------------
 CHROMIUM
------------------------------


Outside values relative to own group for group: bk
-------------------------------------------------------
lowcut =           0.9000
lq     =           2.1000
median =           2.4000
uq     =           2.9000
hicut  =           4.1000
 Lower outside values:
 B       0.6200 ORS00501

 Upper outside values:
         5.6000 ORS00201
         9.3000 ORS01601



-----------------------------------------------------------------
 CHRYSENE
```

```
-----------------------------


Outside values relative to own group for group: bk
-------------------------------------------------------
lowcut =         295.0000
lq     =         340.0000 U
median =         350.0000 U
uq     =         370.0000 U
hicut  =         415.0000
 Lower outside values:
<< NONE FOUND>>
 Upper outside values:
      4700.0000 ORS00901
 E    7700.0000 ORS01601
 D    8300.0000 ORS01601DL




-----------------------------------------------------------------
 COBALT
-----------------------------


Outside values relative to own group for group: bk
-------------------------------------------------------
lowcut =           0.4950
lq     =           0.5400 U
median =           0.5500 U
uq     =           0.5700 U
hicut  =           0.6150
 Lower outside values:
<< NONE FOUND>>
 Upper outside values:
<< NONE FOUND>>



-----------------------------------------------------------------
 COPPER
-----------------------------


Outside values relative to own group for group: bk
-------------------------------------------------------
lowcut =          -0.1750
lq     =           0.8300 B
median =           1.1000 B
uq     =           1.5000 B
hicut  =           2.5050
 Lower outside values:
<< NONE FOUND>>
 Upper outside values:
 B       2.6000 ORS00201
 B       3.1000 ORS01501




-----------------------------------------------------------------
 CYANIDE
-----------------------------



-----------------------------------------------------------------
```

DALAPON

Outside values relative to own group for group: bk

```
lowcut =        -40.0000
lq     =        110.0000 U
median =        200.0000 U
uq     =        210.0000 U
hicut  =        360.0000
 Lower outside values:
<< NONE FOUND>>
 Upper outside values:
 U     440.0000 ORS00901
```

DI-N-BUTYLPHTHALATE

Outside values relative to own group for group: bk

```
lowcut =         25.0000
lq     =        340.0000 J
median =        355.0000 U
uq     =        550.0000
hicut  =        865.0000
 Lower outside values:
<< NONE FOUND>>
 Upper outside values:
 UJ   1000.0000 ORS00601
 U    1500.0000 ORS00901
 U    3800.0000 ORS01601DL
```

DI-N-OCTYLPHTHALATE

Outside values relative to own group for group: bk

```
lowcut =        310.0000
lq     =        340.0000 U
median =        350.0000 U
uq     =        360.0000 U
hicut  =        390.0000
 Lower outside values:
 J     200.0000 ORS00701
 J     260.0000 ORS00601

 Upper outside values:
 U    1500.0000 ORS00901
 U    3800.0000 ORS01601DL
```

DIBENZ(A,H)ANTHRACENE

```
Outside values relative to own group for group: bk
-----------------------------------------------------
lowcut =          295.0000
lq     =          340.0000 U
median =          350.0000 U
uq     =          370.0000 U
hicut  =          415.0000
 Lower outside values:
<< NONE FOUND>>
 Upper outside values:
 U     1500.0000 ORS00901
 JD    1900.0000 ORS01601DL
       2400.0000 ORS01601
```

DIBENZOFURAN

```
Outside values relative to own group for group: bk
-----------------------------------------------------
lowcut =          295.0000
lq     =          340.0000 U
median =          350.0000 U
uq     =          370.0000 U
hicut  =          415.0000
 Lower outside values:
<< NONE FOUND>>
 Upper outside values:
 U     1500.0000 ORS00901
 U     3800.0000 ORS01601DL
```

DIBROMOCHLOROMETHANE

```
Outside values relative to own group for group: bk
-----------------------------------------------------
lowcut =            8.5000
lq     =           10.0000 U
median =           11.0000 U
uq     =           11.0000 U
hicut  =           12.5000
 Lower outside values:
<< NONE FOUND>>
 Upper outside values:
<< NONE FOUND>>
```

DICAMBA

```
Outside values relative to own group for group: bk
-----------------------------------------------------
lowcut =           -4.0000
lq     =           11.0000 U
median =           20.0000 U
uq     =           21.0000 U
hicut  =           36.0000
```

```
 Lower outside values:
<< NONE FOUND>>
 Upper outside values:
 U      44.0000 ORS00901
```

DIELDRIN

```
Outside values relative to own group for group: bk
-------------------------------------------------------
lowcut =          -2.4500
lq     =           3.4000 U
median =           3.5000 U
uq     =           7.3000 U
hicut  =          13.1500
 Lower outside values:
<< NONE FOUND>>
 Upper outside values:
        95.0000 ORS00101
 U     150.0000 ORS00901
 U     180.0000 ORS01601
```

DIETHYLPHTHALATE

```
Outside values relative to own group for group: bk
-------------------------------------------------------
lowcut =         295.0000
lq     =         340.0000 U
median =         350.0000 U
uq     =         370.0000 U
hicut  =         415.0000
 Lower outside values:
<< NONE FOUND>>
 Upper outside values:
 U    1500.0000 ORS00901
 U    3800.0000 ORS01601DL
```

DIMETHYLPHTHALATE

```
Outside values relative to own group for group: bk
-------------------------------------------------------
lowcut =         295.0000
lq     =         340.0000 U
median =         350.0000 U
uq     =         370.0000 U
hicut  =         415.0000
 Lower outside values:
<< NONE FOUND>>
 Upper outside values:
 U    1500.0000 ORS00901
 U    3800.0000 ORS01601DL
```

DINOSEB

Outside values relative to own group for group: bk

```
lowcut =          -4.0000
lq     =          11.0000 U
median =          20.0000 U
uq     =          21.0000 U
hicut  =          36.0000
 Lower outside values:
<< NONE FOUND>>
 Upper outside values:
 U      44.0000 ORS00901
```

ENDOSULFAN I

Outside values relative to own group for group: bk

```
lowcut =          -1.0500
lq     =           1.8000 U
median =           1.8000 U
uq     =           3.7000 U
hicut  =           6.5500
 Lower outside values:
<< NONE FOUND>>
 Upper outside values:
 U       8.7000 ORS00101
 U      76.0000 ORS00901
 U      94.0000 ORS01601
```

ENDOSULFAN II

Outside values relative to own group for group: bk

```
lowcut =          -2.4500
lq     =           3.4000 U
median =           3.5000 U
uq     =           7.3000 U
hicut  =          13.1500
 Lower outside values:
<< NONE FOUND>>
 Upper outside values:
 U      17.0000 ORS00101
 U     150.0000 ORS00901
 U     180.0000 ORS01601
```

ENDOSULFAN SULFATE

Outside values relative to own group for group: bk

```
lowcut =          -2.4500
lq     =           3.4000 U
median =           3.5000 U
uq     =           7.3000 U
hicut  =          13.1500
 Lower outside values:
<< NONE FOUND>>
 Upper outside values:
 U      17.0000 ORS00101
 U     150.0000 ORS00901
 U     180.0000 ORS01601
```

ENDOTHALL

ENDRIN

Outside values relative to own group for group: bk

```
lowcut =          -2.4500
lq     =           3.4000 U
median =           3.5000 U
uq     =           7.3000 U
hicut  =          13.1500
 Lower outside values:
<< NONE FOUND>>
 Upper outside values:
 U      17.0000 ORS00101
 U     150.0000 ORS00901
 U     180.0000 ORS01601
```

ENDRIN ALDEHYDE

Outside values relative to own group for group: bk

```
lowcut =          -2.4500
lq     =           3.4000 U
median =           3.5000 U
uq     =           7.3000 U
hicut  =          13.1500
 Lower outside values:
<< NONE FOUND>>
 Upper outside values:
 U      17.0000 ORS00101
 U     150.0000 ORS00901
 U     180.0000 ORS01601
```

ENDRIN KETONE

Outside values relative to own group for group: bk

```
lowcut =          -2.4500
lq     =           3.4000 U
median =           3.5000 U
uq     =           7.3000 U
hicut  =          13.1500
 Lower outside values:
<< NONE FOUND>>
 Upper outside values:
 U      17.0000 ORS00101
 U     150.0000 ORS00901
 U     180.0000 ORS01601
```

ETHYLBENZENE

Outside values relative to own group for group: bk

```
lowcut =           8.5000
lq     =          10.0000 U
median =          11.0000 U
uq     =          11.0000 U
hicut  =          12.5000
 Lower outside values:
<< NONE FOUND>>
 Upper outside values:
<< NONE FOUND>>
```

FLUORANTHENE

Outside values relative to own group for group: bk

```
lowcut =         295.0000
lq     =         340.0000 U
median =         350.0000 U
uq     =         370.0000 U
hicut  =         415.0000
 Lower outside values:
<< NONE FOUND>>
 Upper outside values:
      3500.0000 ORS00901
 E    9100.0000 ORS01601
 D   14000.0000 ORS01601DL
```

FLUORENE

Outside values relative to own group for group: bk

```
lowcut =          310.0000
lq     =          340.0000 U
median =          350.0000 U
uq     =          360.0000 U
hicut  =          390.0000
 Lower outside values:
 J     190.0000 ORS01601

 Upper outside values:
 U    1500.0000 ORS00901
 U    3800.0000 ORS01601DL
```

GROSS ALPHA

GROSS BETA

HARDNESS AS CACO3

HEPTACHLOR

Outside values relative to own group for group: bk

```
lowcut =           -1.0500
lq     =            1.8000 U
median =            1.8000 U
uq     =            3.7000 U
hicut  =            6.5500
 Lower outside values:
<< NONE FOUND>>
 Upper outside values:
 U       8.7000 ORS00101
 U      76.0000 ORS00901
 U      94.0000 ORS01601
```

HEPTACHLOR EPOXIDE

```
Outside values relative to own group for group: bk
-------------------------------------------------------
lowcut =          -1.0500
lq     =           1.8000 U
median =           1.8000 U
uq     =           3.7000 U
hicut  =           6.5500
 Lower outside values:
<< NONE FOUND>>
 Upper outside values:
 U       8.7000 ORS00101
 U      76.0000 ORS00901
 U      94.0000 ORS01601
```

HEXACHLOROBENZENE

```
Outside values relative to own group for group: bk
-------------------------------------------------------
lowcut =         295.0000
lq     =         340.0000 U
median =         350.0000 U
uq     =         370.0000 U
hicut  =         415.0000
 Lower outside values:
<< NONE FOUND>>
 Upper outside values:
 U    1500.0000 ORS00901
 U    3800.0000 ORS01601DL
```

HEXACHLOROBUTADIENE

```
Outside values relative to own group for group: bk
-------------------------------------------------------
lowcut =         295.0000
lq     =         340.0000 U
median =         350.0000 U
uq     =         370.0000 U
hicut  =         415.0000
 Lower outside values:
<< NONE FOUND>>
 Upper outside values:
 U    1500.0000 ORS00901
 U    3800.0000 ORS01601DL
```

HEXACHLOROCYCLOPENTADIENE

```
Outside values relative to own group for group: bk
-------------------------------------------------------
lowcut =         295.0000
lq     =         340.0000 U
```

```
median =         350.0000 U
uq     =         370.0000 U
hicut  =         415.0000
 Lower outside values:
<< NONE FOUND>>
 Upper outside values:
 U    1500.0000 ORS00901
 U    3800.0000 ORS01601DL
```

HEXACHLOROETHANE

```
Outside values relative to own group for group: bk
-------------------------------------------------------
lowcut =         295.0000
lq     =         340.0000 U
median =         350.0000 U
uq     =         370.0000 U
hicut  =         415.0000
 Lower outside values:
<< NONE FOUND>>
 Upper outside values:
 U    1500.0000 ORS00901
 U    3800.0000 ORS01601DL
```

INDENO(1,2,3-CD)PYRENE

```
Outside values relative to own group for group: bk
-------------------------------------------------------
lowcut =         295.0000
lq     =         340.0000 U
median =         350.0000 U
uq     =         370.0000 U
hicut  =         415.0000
 Lower outside values:
<< NONE FOUND>>
 Upper outside values:
      4400.0000 ORS00901
 D    5800.0000 ORS01601DL
 E    6900.0000 ORS01601
```

IRON

```
Outside values relative to own group for group: bk
-------------------------------------------------------
lowcut =         -76.5000
lq     =         276.0000
median =         373.0000
uq     =         511.0000
hicut  =         863.5000
 Lower outside values:
<< NONE FOUND>>
```

```
 Upper outside values:
<< NONE FOUND>>


-----------------------------------------------------------------
 ISOPHORONE
-----------------------------


Outside values relative to own group for group: bk
-------------------------------------------------------
lowcut =         295.0000
lq     =         340.0000 U
median =         350.0000 U
uq     =         370.0000 U
hicut  =         415.0000
 Lower outside values:
<< NONE FOUND>>
 Upper outside values:
 U    1500.0000 ORS00901
 U    3800.0000 ORS01601DL


-----------------------------------------------------------------
 LEAD
-----------------------------


Outside values relative to own group for group: bk
-------------------------------------------------------
lowcut =          -8.2500
lq     =           2.7000
median =           6.3000
uq     =          10.0000
hicut  =          20.9500
 Lower outside values:
<< NONE FOUND>>
 Upper outside values:
        23.2000 ORS01501
        33.0000 ORS01601


-----------------------------------------------------------------
 LEAD-212
-----------------------------


-----------------------------------------------------------------
 LEAD-214
-----------------------------


-----------------------------------------------------------------
 MCPA
-----------------------------


Outside values relative to own group for group: bk
```

```
-----------------------------------------------------
lowcut =      -16000.0000
lq     =        5600.0000 U
median =       11000.0000 U
uq     =       20000.0000 U
hicut  =       41600.0000
 Lower outside values:
<< NONE FOUND>>
 Upper outside values:
 U   45000.0000 ORS00701
```

```
-----------------------------------------------------------------
 MCPP
-----------------------------
```

```
Outside values relative to own group for group: bk
-----------------------------------------------------
lowcut =      -16000.0000
lq     =        5600.0000 U
median =       10000.0000 U
uq     =       20000.0000 U
hicut  =       41600.0000
 Lower outside values:
<< NONE FOUND>>
 Upper outside values:
 U   45000.0000 ORS00701
```

```
-----------------------------------------------------------------
 MAGNESIUM
-----------------------------
```

```
Outside values relative to own group for group: bk
-----------------------------------------------------
lowcut =        -103.5000
lq     =          34.2000 B
median =          48.1000 B
uq     =         126.0000 B
hicut  =         263.7000
 Lower outside values:
<< NONE FOUND>>
 Upper outside values:
 B     325.0000 ORS00801
 B     408.0000 ORS01001
      1330.0000 ORS00201
```

```
-----------------------------------------------------------------
 MANGANESE
-----------------------------
```

```
Outside values relative to own group for group: bk
-----------------------------------------------------
lowcut =          -4.3500
lq     =           1.8000 B
median =           3.2000
uq     =           5.9000
hicut  =          12.0500
 Lower outside values:
```

```
<< NONE FOUND>>
 Upper outside values:
        12.5000 ORS00201
        14.8000 ORS01601
```

MERCURY

```
Outside values relative to own group for group: bk
-------------------------------------------------------
lowcut =          -0.0100
lq     =           0.0200 B
median =           0.0200 B
uq     =           0.0400 B
hicut  =           0.0700
 Lower outside values:
<< NONE FOUND>>
 Upper outside values:
         0.0800 ORS01501
```

METHOXYCHLOR

```
Outside values relative to own group for group: bk
-------------------------------------------------------
lowcut =         -10.5000
lq     =          18.0000 U
median =          18.0000 U
uq     =          37.0000 U
hicut  =          65.5000
 Lower outside values:
<< NONE FOUND>>
 Upper outside values:
 U      87.0000 ORS00101
 U     760.0000 ORS00901
 U     940.0000 ORS01601
```

METHYLENE CHLORIDE

```
Outside values relative to own group for group: bk
-------------------------------------------------------
lowcut =           8.5000
lq     =          10.0000 U
median =          11.0000 U
uq     =          11.0000 U
hicut  =          12.5000
 Lower outside values:
<< NONE FOUND>>
 Upper outside values:
<< NONE FOUND>>
```

N-NITROSO-DI-N-PROPYLAMINE

Outside values relative to own group for group: bk

```
lowcut =         295.0000
lq     =         340.0000 U
median =         350.0000 U
uq     =         370.0000 U
hicut  =         415.0000
 Lower outside values:
<< NONE FOUND>>
 Upper outside values:
 U    1500.0000 ORS00901
 U    3800.0000 ORS01601DL
```

N-NITROSODIPHENYLAMINE (1)

Outside values relative to own group for group: bk

```
lowcut =         295.0000
lq     =         340.0000 U
median =         350.0000 U
uq     =         370.0000 U
hicut  =         415.0000
 Lower outside values:
<< NONE FOUND>>
 Upper outside values:
 U    1500.0000 ORS00901
 U    3800.0000 ORS01601DL
```

NAPHTHALENE

Outside values relative to own group for group: bk

```
lowcut =         295.0000
lq     =         340.0000 U
median =         350.0000 U
uq     =         370.0000 U
hicut  =         415.0000
 Lower outside values:
<< NONE FOUND>>
 Upper outside values:
 U    1500.0000 ORS00901
 U    3800.0000 ORS01601DL
```

NICKEL

```
Outside values relative to own group for group: bk
-----------------------------------------------------
lowcut =          1.7500
lq     =          1.9000 U
median =          1.9000 U
uq     =          2.0000 U
hicut  =          2.1500
 Lower outside values:
<< NONE FOUND>>
 Upper outside values:
 B       2.2000 ORS00201
```

NITROBENZENE

```
Outside values relative to own group for group: bk
-----------------------------------------------------
lowcut =        295.0000
lq     =        340.0000 U
median =        350.0000 U
uq     =        370.0000 U
hicut  =        415.0000
 Lower outside values:
<< NONE FOUND>>
 Upper outside values:
 U    1500.0000 ORS00901
 U    3800.0000 ORS01601DL
```

PENTACHLOROPHENOL

```
Outside values relative to own group for group: bk
-----------------------------------------------------
lowcut =        770.0000
lq     =        860.0000 U
median =        890.0000 U
uq     =        920.0000 U
hicut  =       1010.0000
 Lower outside values:
<< NONE FOUND>>
 Upper outside values:
 U    3700.0000 ORS00901
 U    9500.0000 ORS01601DL
```

PHENANTHRENE

```
Outside values relative to own group for group: bk
-----------------------------------------------------
lowcut =        295.0000
lq     =        340.0000 U
median =        350.0000 U
uq     =        370.0000 U
hicut  =        415.0000
```

```
 Lower outside values:
<< NONE FOUND>>
 Upper outside values:
 J      900.0000 ORS00901
       2100.0000 ORS01601
 JD    2800.0000 ORS01601DL
```

PHENOL

```
Outside values relative to own group for group: bk
-------------------------------------------------------
lowcut =          295.0000
lq     =          340.0000 U
median =          350.0000 U
uq     =          370.0000 U
hicut  =          415.0000
 Lower outside values:
<< NONE FOUND>>
 Upper outside values:
 U     1500.0000 ORS00901
 U     3800.0000 ORS01601DL
```

POTASSIUM

```
Outside values relative to own group for group: bk
-------------------------------------------------------
lowcut =           61.9500
lq     =           70.2000 U
median =           72.4000 U
uq     =           75.7000 U
hicut  =           83.9500
 Lower outside values:
<< NONE FOUND>>
 Upper outside values:
 B      105.0000 ORS01601
```

POTASSIUM-40

PYRENE

```
Outside values relative to own group for group: bk
-------------------------------------------------------
lowcut =          295.0000
lq     =          340.0000 U
median =          350.0000 U
```

```
uq     =          370.0000 U
hicut  =          415.0000
 Lower outside values:
<< NONE FOUND>>
 Upper outside values:
      3900.0000 ORS00901
 D   11000.0000 ORS01601DL
 E   14000.0000 ORS01601
```

SELENIUM

```
Outside values relative to own group for group: bk
-------------------------------------------------------
lowcut =            0.3650
lq     =            0.4100 U
median =            0.4300 U
uq     =            0.4400 U
hicut  =            0.4850
 Lower outside values:
<< NONE FOUND>>
 Upper outside values:
 B       0.5300 ORS00301
 B       0.5700 ORS00701
```

SILVER

```
Outside values relative to own group for group: bk
-------------------------------------------------------
lowcut =            0.4150
lq     =            0.4600 U
median =            0.4700 U
uq     =            0.4900 U
hicut  =            0.5350
 Lower outside values:
<< NONE FOUND>>
 Upper outside values:
 B       1.3000 ORS01501
```

SILVEX (2,4,5-TP)

```
Outside values relative to own group for group: bk
-------------------------------------------------------
lowcut =           -4.0000
lq     =           11.0000 U
median =           20.0000 U
uq     =           21.0000 U
hicut  =           36.0000
 Lower outside values:
<< NONE FOUND>>
 Upper outside values:
 U      44.0000 ORS00901
```

```
-----------------------------------------------------------------
 SODIUM
-----------------------------

Outside values relative to own group for group: bk
-------------------------------------------------------
lowcut =          5.4000
lq     =          6.3000 U
median =          6.6000 U
uq     =          6.9000 U
hicut  =          7.8000
 Lower outside values:
<< NONE FOUND>>
 Upper outside values:
 B      10.9000 ORS01601
 B      16.0000 ORS01001
 B      45.7000 ORS00201
```

```
-----------------------------------------------------------------
 STYRENE
-----------------------------

Outside values relative to own group for group: bk
-------------------------------------------------------
lowcut =          8.5000
lq     =         10.0000 U
median =         11.0000 U
uq     =         11.0000 U
hicut  =         12.5000
 Lower outside values:
<< NONE FOUND>>
 Upper outside values:
<< NONE FOUND>>
```

```
-----------------------------------------------------------------
 TETRACHLOROETHENE
-----------------------------

Outside values relative to own group for group: bk
-------------------------------------------------------
lowcut =          8.5000
lq     =         10.0000 U
median =         11.0000 U
uq     =         11.0000 U
hicut  =         12.5000
 Lower outside values:
<< NONE FOUND>>
 Upper outside values:
<< NONE FOUND>>
```

```
-----------------------------------------------------------------
 THALLIUM
-----------------------------
```

APPENDIX G

PRECISION, ACCURACY, REPRESENTATIVENESS, COMPLETENESS, AND COMPARABILITY (PARCC) SUMMARY REPORT

PRECISION, ACCURACY, REPRESENTATIVENESS, COMPARABILITY, AND COMPLETENESS FOR NTC ORLANDO, GROUP I SCREENING STUDY AND BACKGROUND SAMPLING PROGRAM (SELECTED SAMPLE DELIVERY GROUPS)

NAVAL TRAINING CENTER - ORLANDO
ORLANDO, FLORIDA

Prepared by:
Heartland Environmental Services, Inc.
P.O. Box 163
St. Peters, Missouri 63376

Prepared for:

ABB Environmental Services, Inc.
1536 Kingsley Avenue, Suite 127
Orange Park, Florida 32073

May 1995

TABLE OF CONTENTS
Precision, Accuracy, Representativeness,
Comparability, and Completeness
NTC Orlando Group I

Section	Title	Page No.
1.0	INTRODUCTION	1-1
2.0	PRECISION	2-1
2.1	Water Matrix	2-63
2.2	Soil Matrix	2-64
3.0	ACCURACY	3-1
3.1	Water Matrix	3-1
3.2	Soil Matrix	3-25
4.0	REPRESENTATIVENESS	4-1
4.1	Trip Blanks	4-39
4.2	Field Blanks	4-39
4.3	Equipment Rinseate Blanks	4-40
4.4	Method Blanks	4-40
4.5	Holding Times	4-41
5.0	COMPARABILITY	5-1
6.0	COMPLETENESS	6-1
7.0	PARCC SUMMARY	7-1
7.1	Water Matrix	7-2
7.2	Soil Matrix	7-3
7.3	QC Matrix	7-4

REFERENCES

APPENDICES

Appendix A: Calibration Summary
Appendix B: Serial Dilution Summary
Appendix C: Summary of Rejected Data

LIST OF TABLES
Precision, Accuracy, Representativeness,
Comparability, and Completeness
NTC Orlando - Group I

Tables	Title	Page No.
2-1	Low Concentration Volatile Organic Compounds, Water Sample and Duplicate Precision	2-2
2-2	Low Concentration Semivolatile Organic Compounds, Water Sample and Duplicate Precision	2-3
2-3	Semivolatile Organic Compounds, Water Sample and Duplicate Precision	2-4
2-4	Polynuclear Aromatic Hydrocarbons, Water Sample and Duplicate Precision	2-5
2-5	Pesticides/PCBs, Soil Sample and Duplicate Precision	2-6
2-6	Chlorinated Herbicides, Water Sample and Duplicate Precision	2-7
2-7	Endothall, Water Sample and Duplicate Precision	2-8
2-8	Metals, Water Sample and Duplicate Precision	2-9
2-9	GC/MS Volatile Organic Compounds, Soil Sample and Duplicate Precision	2-10
2-10	Semivolatile Organic Compounds, Soil Sample and Duplicate Precision	2-11
2-11	Pesticides/PCBs, Soil Sample and Duplicate Precision	2-12
2-12	Chlorinated Herbicides, Soil Sample and Duplicate Precision	2-13
2-13	Metals, Soil Sample and Duplicate Precision	2-14
2-14	Cyanide, Soil Sample and Duplicate Precision	2-17
2-15	Total Petroleum Hydrocarbons, Soil Sample and Duplicate Precision	2-18
2-16	Total Organic Carbon, Soil Sample and Duplicate Precision	2-19
2-17	Low Concentration Volatile Organic Compounds, Water Matrix Spike and Matrix Spike Duplicates	2-20
2-18	Low Concentration Semivolatile Organic Compounds, Water Matrix Spike and Matrix Spike Duplicates	2-24
2-19	Semivolatile Organic Compounds, Water Matrix Spike and Matrix Spike Duplicates	2-25
2-20	Polynuclear Aromatic Hydrocarbons, Water Matrix Spike and Matrix Spike Duplicates	2-28
2-21	Pesticide/PCBs, Water Matrix Spike and Matrix Spike Duplicates	2-30
2-22	Chlorinated Herbicides, Water Matrix Spike and Matrix Spike Duplicates	2-32
2-23	Metals, Water Matrix and Matrix Duplicates	2-34
2-24	GC/MS Volatile Organic Compounds, Soil Matrix Spike and Matrix Spike Duplicates	2-37
2-25	Semivolatile Organic Compounds, Soil Matrix Spike and Matrix Spike Duplicates	2-42
2-26	Pesticides/PCBs, Soil Matrix Spike and Matrix Spike Duplicates	2-46
2-27	Chlorinated Herbicides, Soil Matrix Spike and Matrix Spike Duplicates	2-49
2-28	Metals, Soil Matrix and Matrix Duplicates	2-54
2-29	Cyanide, Soil Matrix Spike and Matrix Spike Duplicates	2-59
2-30	Total Petroleum Hydrocarbons, Soil Matrix and Matrix Duplicates	2-60
2-31	Total Organic Carbon, Soil Matrix and Matrix Duplicates	2-63
3-1	Low Concentration Volatile Surrogate Recoveries in Water Matrix	3-2
3-2	GC/MS Volatile Surrogate Recoveries in Water Matrix	3-4
3-3	Low Concentration Semivolatile Surrogate Recoveries in Water Matrix	3-5
3-4	Semivolatile Surrogate Recoveries in Water Matrix	3-7
3-5	Polynuclear Aromatic Hydrocarbons Surrogate Recoveries in Water Matrix	3-9
3-6	Pesticides/PCBs Surrogate Recoveries in Water Matrix	3-10
3-7	Chlorinated Herbicides Surrogate Recoveries in Water Matrix	3-12
3-8	GC/MS Volatile Surrogate Recoveries in Soil Matrix	3-13

LIST OF TABLES
Precision, Accuracy, Representativeness,
Comparability, and Completeness
NTC Orlando - Group I

Tables	Title	Page No.
3-9	Semivolatile Surrogate Recoveries in Soil Matrix	3-16
3-10	Pesticides/PCBs Surrogate Recoveries in Soil Matrix	3-19
3-11	Chlorinated Herbicides Surrogate Recoveries in Soil Matrix	3-22
4-1	Low Concentration Volatiles Detected in Trip Blanks	4-2
4-2	GC/MS Volatiles Detected in Trip Blanks	4-3
4-3	Low Concentration Volatiles Detected in Field Blanks	4-4
4-4	Low Concentration Semivolatiles Detected in Field Blanks	4-5
4-5	GC/MS Semivolatiles Detected in Field Blanks	4-6
4-6	Polynuclear Aromatic Hydrocarbons Detected in Field Blanks	4-7
4-7	Pesticide/PCBs Detected in Field Blanks	4-8
4-8	Chlorinated Herbicides Detected in Field Blanks	4-9
4-9	Endothall Detected in Field Blanks	4-10
4-10	Metals Detected in Field Blanks	4-11
4-11	Cyanide Detected in Field Blanks	4-12
4-12	Total Petroleum Hydrocarbons Detected in Field Blanks	4-13
4-13	Low Concentration Volatiles Detected in Rinseate Blanks	4-14
4-14	GC/MS Volatiles Detected in Rinseate Blanks	4-15
4-15	Low Concentration Semivolatiles Detected in Rinseate Blanks	4-16
4-16	GC/MS Semivolatiles Detected in Rinseate Blanks	4-17
4-17	Polynuclear Aromatic Hydrocarbons Detected in Rinseate Blanks	4-18
4-18	Pesticide/PCBs Detected in Rinseate Blanks	4-19
4-19	Chlorinated Herbicides Detected in Rinseate Blanks	4-20
4-20	Endothall Detected in Rinseate Blanks	4-21
4-21	Metals Detected in Rinseate Blanks	4-22
4-22	Cyanide Detected in Rinseate Blanks	4-23
4-23	Total Petroleum Hydrocarbons Detected in Rinseate Blanks	4-24
4-24	Low Concentration Volatiles Detected in Method Blanks	4-25
4-25	GC/MS Volatiles Detected in Method Blanks	4-26
4-26	Low Concentration Semivolatiles Detected in Method Blanks	4-28
4-27	GC/MS Semivolatiles Detected in Method Blanks	4-29
4-28	Polynuclear Aromatic Hydrocarbons Detected in Method Blanks	4-31
4-29	Pesticide/PCBs Detected in Method Blanks	4-32
4-30	Chlorinated Herbicides Detected in Method Blanks	4-34
4-31	Herbicides Detected in Method Blanks	4-36
4-32	Metals/Cyanide Detected in Method Blanks	4-37
5-1	USEPA Procedure (CLP and SW-846 Methodologies)	5-1
6-1	Completion Goal (>80 Percent)	6-1
7-1	PARCCs Criteria Summary, Water Samples	7-2
7-2	PARCCs Criteria Summary, Soil Samples	7-3
7-3	PARCCs Criteria Summary, Quality Control Samples	7-4

Appendix A
Calibration Criteria Summary

NTC Orlando - Group I

Tables	Title	Page No.
A-1	Low Concentration Volatile Organic Compounds, Initial and Continuing Calibration Outlier Summary	Appendix A
A-2	GC/MS Volatile Organic Compounds, Initial and Continuing Calibration Outlier Summary	Appendix A
A-3	GC/MS Semivolatile Organic Compounds, Initial and Continuing Calibration Outlier Summary	Appendix A

Appendix B
Serial Dilution Summary

NTC Orlando - Group I

Tables	Title	Page No.
B-1	Metals, Water Sample Serial Dilution Summary	Appendix B
B-2	Metals, Soil Sample Serial Dilution Summary	Appendix B

Appendix C
Rejected Data Summary

NTC Orlando - Group I

Tables	Title	Page No.
C-1	GC/MS Volatile Organic Compounds, Rejected Data Summary	Appendix C
C-2	GC/MS Volatile Organic Compounds, Rejected Data Summary	Appendix C
C-3	GC/MS Semivolatile Organic Compounds, Rejected Data Summary	Appendix C
C-4	GC/MS Volatile Organic Compounds, Rejected Data Summary	Appendix C
C-5	Polynuclear Aromatic Hydrocarbons, Rejected Data Summary	Appendix C
C-6	Pesticide/PCBs, Rejected Data Summary	Appendix C
C-7	Chlorinated Herbicides, Rejected Data Summary	Appendix C
C-8	Endothall, Rejected Data Summary	Appendix C
C-9	Total Metals, Rejected Data Summary	Appendix C
C-10	Cyanide, Rejected Data Summary	Appendix C
C-11	Total Petroleum Hydrocarbons, Rejected Data Summary	Appendix C
C-12	Total Organic Carbon, Rejected Data Summary	Appendix C

1.0 INTRODUCTION

Prior to evaluating the data from the NTC ORLANDO, Group I Screening Study and Background Sampling Program (Selected Sample Delivery Groups) for precision, accuracy, representativeness, comparability, and completeness (PARCC) criteria the laboratory reviewed the data package and the data also were independently reviewed and validated using the Naval Energy and Environmental and Support Activity (NEESA) guidance document 20.2-047B (1988) entitled, *Sampling and Chemical Analysis Quality Assurance Requirements for the Navy Installation Program*. Before the laboratory released the chemical analytical results, both the sample and laboratory QC data were carefully reviewed in order to verify sample identity, instrument calibration, detection limits, dilution factors, numerical computations, accuracy of transcriptions, and chemical interpretations. Additionally, the QC data were reduced and spike recoveries were included in control charts, and the resulting data were reviewed to ascertain whether they were within the laboratory defined limits for accuracy and precision. The data were compiled into NEESA Level D data packages and any nonconforming data were discussed in the data package cover letter and case narrative.

The Level D data packages were then reviewed and validated by Heartland Environmental Services, Inc., Missouri (Heartland). Data validation is the technical review of a data package using criteria established in the data quality objectives, the quality assurance project plan and guidance documents prepared by the United States Environmental Protection Agency (USEPA) for the validation of organic and inorganic analytical data (USEPA 1990a and 1990b) as specified by NEESA document 20.2-047B. The data review and validation process is independent of the laboratory's checks because it is impossible to repeat the review conducted by the laboratory.

Samples that did not meet the acceptance limit criteria were qualified with a flag; single letter abbreviations that indicate a problem with the data. Data qualifiers used by the validators when amending the data include the following.

U — Undetected. The analyte was not detected above the contract required quantitation limit (CRQL). The "U" designator also is used to qualify laboratory contaminants. The "U" designator is applied to an environmental sample when the laboratory contaminant is detected in an environmental sample at a concentration less than 5 times (10 X for common contaminants) the value of the concentration detected in any corresponding field QC blank, method blank or preparation blanks.

J — Estimated. The analyte was present, but the reported value may not be accurate or precise. The "J" designator is used to qualify an analyte that was present at a concentration between the CRQL and method detection limit (MDL) or the data "failed" some of the analytical validation criteria but did not require rejections of the data. When combined with the U designator, the quantitation limit is estimated.

R — Rejected. Data was rejected by the data validator during comparison of the NEESA Level D data package with the analytical functional guideline criteria. The "R" designator indicates a significant variance in acceptable laboratory performance. Either re-analysis or re-sampling and analysis would be necessary to determine the presence or absence of the target analyte(s).

Once the data were reviewed and validated according to the guidance presented in NEESA document 20.2-047B, the data were evaluated by Heartland using the PARCCs criteria included in the Data Quality Objectives (DQOs) of the Project Operations Plan for Site Investigations, NTC - Orlando, Orlando, Florida. The following sections present a brief description of PARCCs criteria.

Precision. Precision is a measure of the agreement or repeatability of a set of replicate results obtained from duplicate laboratory analyses of samples collected from the same location/depth interval. Precision was calculated from laboratory analytical data and cannot be measured directly. Precision is expressed as the Relative Percent Difference (RPD) between analytical values for two samples divided by the average of their analytical values. Precision is calculated using the expression:

$$RPD = (D1-D2) / (\tfrac{1}{2}(D1+D2)) \times 100$$

D1 and D2 are the reported values for the duplicate sample pair. Precision was evaluated using field duplicate samples and laboratory split samples (for example, MS/MSD samples).

Precision for environmental samples and their duplicates was assessed using a maximum RPD of 20 percent for water matrices and 35 percent for soil matrices. Precision for MS/MSD/MD samples was assessed by using the target analyte specific RPD criteria for the spiked compounds and the sample duplicates.

Accuracy. Accuracy is a measure of the agreement between an experimental determination and the true value of the parameter being measured. Accuracy can be calculated from the analytical data and was not measured directly. Accuracy is used to identify the bias in a given measurement system (i.e. laboratory conditions, sample matrix, and sampling conditions). Accuracy is assessed by reviewing the Percent Recovery (%R) between the true value of the spike analyte and the actual analytical value. Accuracy is calculated using the equation:

$$\%R = ((A-B)/C) \times 100$$

A = Measured concentration of the spiked analyte.
B = Measured concentration of the spiked compound in the unspiked sample.
C = True concentration of the spiked analyte.

For the organic analyses, each of the samples was spiked with a surrogate compound; and for inorganic analyses, each chosen matrix spike and matrix duplicate pair was spiked with a known reference material before digestion. Each of these approaches provides a measure of the matrix effects on the analytical accuracy.

Representativeness. Representativeness is a qualitative measure of the degree to which sample data accurately and precisely represent a characteristic environmental condition. Representativeness is a subjective parameter and is used to evaluate the efficacy of the sampling plan design. Representativeness was evaluated using the field and laboratory QC blank sample results. QC blank samples are equipment rinseate blanks, field blanks, trip blanks, laboratory method blanks for organic analysis and laboratory preparation blanks for inorganic analysis. Positive detection of target analytes in the QC blank samples identify contaminants that possibly were introduced to the associated environmental sample during sample collection, transport or laboratory analysis. Representativeness was also evaluated used the defined extraction and analytical holding time requirements set forth in the Work Plan for NTC Orlando or the analytical methodology.

Comparability. Comparability is qualitative measure designed to express the confidence with which one data set may be compared to another. Factors that affect comparability are: sample collection and handling techniques, sample matrix type, and analytical method. Comparability is limited by

the other PARCC parameters because only when precision and accuracy are known can data sets be compared with confidence.

Completeness. Completeness is defined as the percentage of measurements that are judged to be valid compared to the total number of measurements made. Valid usable data are values that were not qualified as rejected (R qualifier) during data validation. A goal of 80 percent usable data was established in the Work Plan for NTC, Orlando. Completeness equals the total number of analytes for each matrix minus the total number of rejected analytes divided by the total number of analytes multiplied by 100.

2.0 PRECISION

The following section describes the evaluation of precision for volatile organic compounds, semivolatile organic compounds, polynuclear aromatic hydrocarbons, pesticides and polychlorinated biphenyls (PCBs), herbicides, metals, cyanide, total petroleum hydrocarbons (TPH), and total organic carbon (TOC). Duplicate samples are evaluated for precision only when contaminants are detected in both the environmental sample and the sample's duplicate. A ND in the RPD column of the spreadsheet indicates that a RPD calculation was not required because one result was a non-detect and the other result was less than the compound/analyte CRQL/CRDL. Environmental samples and their respective duplicates may not exhibit positive results for all compounds found at or near the contract required quantitation limit (CRQL) or detection limit (CRDL) because of low levels of contamination found at a site. Duplicates with Relative Percent Differences (RPDs) within control limits indicate adequate sampling practices and/or good analytical precision. Duplicates with RPDs outside the control limits may result from inappropriate sampling procedures, matrix interferences, or non-homogeneity of the sample matrix. In addition, poor precision can be attributed to deviation(s) from the analytical methodology or to poor reproducibility of target analyte concentrations at or near the required quantitation or detection limits (CRQLs or CRDLs). The acceptance criteria for evaluating precision of field duplicates analytical results is a RPD of 20 for water matrices and 35 for soil matrices.

The percent of duplicate samples collected for the analytical parameters and sample matrices was greater than ten percent (10%) for the water and soil matrices as specified in the Work Plan for NTC Orlando. The following Sections summarize the evaluation of analytical precision for the water and soil matrices for the following analytical groups:

- Low Concentration volatile organic compounds (LCVOCs);
- GC/MS volatile organic compounds (GC/MS VOCs);
- Low concentration semivolatile organic compounds (LCSVOCs);
- GC/MS Semivolatile organic compounds (GC/MS SVOCs);
- endothall;
- polynuclear aromatic hydrocarbons (PAHs);
- pesticides, PCBs,;
- herbicides; and
- inorganics, TPH, and TOC.

Duplicate precision was assessed using both environmental sample and associated duplicates and matrix spike (MS)/matrix spike duplicates (MSDs) pairs for organic fractions, and matrix duplicate pairs (MD pairs) for the metals, cyanide, TPH, and TOC fractions.

Tabulation of the results of assessing duplicate precision and duplicate frequency are presented in Tables 2-1 through 2-8 for the water matrix and Tables 2-9 through 2-16 for the soil matrix. The results of the evaluation of precision for MS/MSD samples is provided in Tables 2-17 through 2-23 for the water matrix and Tables 2-24 through 2-31 for the soil matrix.

In addition, to assess whether instrument calibration for volatile and semivolatile analytical methods resulted in non-compliant duplicate precision, tables were made of initial and continuing calibration outliers for each sample delivery group (SDG) and are included in Appendix A. Calibration criteria was met in the other organic fractions or the non-compliances did not result in qualification of the analytical data. Therefore, tables of calibration criteria were not prepared for those fractions. To assess the potential for non-compliance in metals analytical data, caused by physical and/or chemical interferences and indicated by non-compliant serial dilution results, tables were prepared of serial dilution results. These are included in Appendix B.

TABLE 2 - 1
LOW CONCENTRATION VOLATILES COMPOUNDS
WATER SAMPLE AND DUPLICATE PRECISION
NTC-ORLANDO, GROUP 1 SCREENING STUDY
AND BACKGROUND SAMPLING PROGRAM

SDG	SAMPLE ID	MATRIX	NO. ASSC. SAMPLES	COMPOUND	SAMPLE CONC.	DUP CONC	MAX RPD	RPD
OR005	08G00401	WATER	14	NO COMPOUNDS DETECTED				
OR011	ORG00701	WATER	10	CHLOROFORM	1	1	20%	0%
	ORG00201	WATER		CHLOROFORM	0.7	0.6	20%	15%
OR012	05G00301	WATER	12	CARBON DISULFIDE	0.3	0.5	20%	50%
	TOTAL SAMPLES		36					

% OF DUPLICATES COLLECTED	RPD IN	RPD OUT	% WITHIN RPD LIMIT
11.1%	3	1	75.0%

TABLE 2 - 2
LOW CONCENTRATION SEMIVOLATILES COMPOUNDS
WATER SAMPLE AND DUPLICATE PRECISION
NTC-ORLANDO, GROUP 1 SCREENING STUDY
AND BACKGROUND SAMPLING PROGRAM

SDG	SAMPLE ID	MATRIX	NO. ASSC. SAMPLES	COMPOUND	SAMPLE CONC.	DUP CONC	MAX RPD	RPD
OR005	08G00401	WATER	14	NO COMPOUNDS DETECTED				
OR011	ORG00701	WATER	10	NO COMPOUNDS DETECTED				
	ORG00201	WATER		NO COMPOUNDS DETECTED				
OR012	05G00301	WATER	12	NO COMPOUNDS DETECTED				
	TOTAL SAMPLES		36					

% OF DUPLICATES COLLECTED	RPD IN	RPD OUT	% WITHIN RPD LIMIT
11.1%	4	0	100.0%

TABLE 2 - 3
GC/MS SEMIVOLATILES COMPOUNDS
WATER SAMPLE AND DUPLICATE PRECISION
NTC-ORLANDO, GROUP 1 SCREENING STUDY
AND BACKGROUND SAMPLING PROGRAM

SDG	SAMPLE ID	MATRIX	NO. ASSC. SAMPLES	COMPOUND	SAMPLE CONC.	DUP CONC	MAX RPD	RPD
OR005	08G00401	WATER	14	NAPHTHALENE	3	4	20%	29%
OR011	ORG00701	WATER	10	DI-N-BUTYLPHTHALATE	3	0	20%	NR
				DI-N-OCTYLPHTHALATE	0	3	20%	NR
	ORG00201			DI-N-OCTYLPHTHALATE	0	3	20%	NR
OR012	O5G00301	WATER	12	NO COMPOUNDS DETECTED				
	TOTAL SAMPLES		36					

% OF DUPLICATES COLLECTED	RPD IN	RPD OUT	% WITHIN RPD LIMIT
11.1%	3	1	75.0%

TABLE 2 - 4
POLYNUCLEAR AROMATIC HYDROCARBONS
WATER SAMPLE AND DUPLICATE PRECISION
NTC-ORLANDO, GROUP 1 SCREENING STUDY
AND BACKGROUND SAMPLING PROGRAM

SDG	SAMPLE ID	MATRIX	NO. ASSC. SAMPLES	COMPOUND	SAMPLE CONC.	DUP CONC	MAX RPD	RPD
OR005	08G00401	WATER	14	NO COMPOUNDS DETECTED				
OR011	ORG00701	WATER	10	NO COMPOUNDS DETECTED				
	ORG00201			NO COMPOUNDS DETECTED				
OR012	05G00301	WATER	12	NO COMPOUNDS DETECTED				
	TOTAL SAMPLES		36					

% OF DUPLICATES COLLECTED	RPD IN	RPD OUT	% WITHIN RPD LIMIT
11.1%	4	0	100.0%

TABLE 2 - 5
PESTICIDES/PCBs COMPOUNDS
WATER SAMPLE AND DUPLICATE PRECISION
NTC-ORLANDO, GROUP 1 SCREENING STUDY
AND BACKGROUND SAMPLING PROGRAM

SDG	SAMPLE ID	MATRIX	NO. ASSC. SAMPLES	COMPOUND	SAMPLE CONC.	DUP CONC	MAX RPD	RPD
OR005	08G00401	WATER	14	NO COMPOUNDS DETECTED				
OR011	ORG00701	WATER	10	NO COMPOUNDS DETECTED				
	ORG00201			NO COMPOUNDS DETECTED				
OR012	05G00301	WATER	12	NO COMPOUNDS DETECTED				
	TOTAL SAMPLES		36					

% OF DUPLICATES COLLECTED	RPD IN	RPD OUT	% WITHIN RPD LIMIT
11.1%	4	0	100.0%

TABLE 2 - 6
CHLORINATED HERBICIDES COMPOUNDS
WATER SAMPLE AND DUPLICATE PRECISION
NTC-ORLANDO, GROUP 1 SCREENING STUDY
AND BACKGROUND SAMPLING PROGRAM

SDG	SAMPLE ID	MATRIX	NO. ASSC. SAMPLES	COMPOUND	SAMPLE CONC.	DUP CONC	MAX RPD	RPD
OR005	08G00401	WATER	8	NO COMPOUNDS DETECTED				
OR011	ORG00701	WATER	15	NO COMPOUNDS DETECTED				
	ORG00201			NO COMPOUNDS DETECTED				
	TOTAL SAMPLES		23					

% OF DUPLICATES COLLECTED	RPD IN	RPD OUT	% WITHIN RPD LIMIT
13.0%	3	0	100.0%

TABLE 2 - 7
ENDOTHALL
WATER SAMPLE AND DUPLICATE PRECISION
NTC-ORLANDO, GROUP 1 SCREENING STUDY
AND BACKGROUND SAMPLING PROGRAM

SDG	SAMPLE ID	MATRIX	NO. ASSC. SAMPLES	COMPOUND	SAMPLE CONC.	DUP CONC	MAX RPD	RPD
OR005	08G00401	WATER	4	NO COMPOUNDS DETECTED				
	TOTAL SAMPLES		4					

% OF DUPLICATES COLLECTED	RPD IN	RPD OUT	% WITHIN RPD LIMIT
25.0%	1	0	100.0%

TABLE 2 - 8
TOTAL METALS ANALYTES
WATER SAMPLE AND DUPLICATE PRECISION
NTC-ORLANDO, GROUP 1 SCREENING STUDY
AND BACKGROUND SAMPLING PROGRAM

SDG	SAMPLE ID	MATRIX	NO. ASSC. SAMPLES	COMPOUND	SAMPLE CONC.	DUP CONC	MAX RPD	RPD
OR005	08G00401	WATER	14	ALUMINUM	269	235	20%	13%
				ANTIMONY	4.6	5.6	20%	20%
				ARSENIC	322	319	20%	1%
				BARIUM	10	8.8	20%	13%
				CALCIUM	70200	64700	20%	8%
				CHROMIUM	6	5.1	20%	16%
				COPPER	1.8	0	20%	ND
				IRON	611	539	20%	13%
				MAGNESIUM	6220	5750	20%	8%
				MANGANESE	8.8	8.5	20%	3%
				NICKEL	0	14.3	20%	ND
				POTASSIUM	20600	19300	20%	7%
				SODIUM	13300	12200	20%	9%
OR011	ORG00701	WATER	10	ALUMINUM	118	115	20%	3%
				BARIUM	9.1	8.4	20%	8%
				CALCIUM	4690	4560	20%	3%
				IRON	1540	1510	20%	2%
				MAGNESIUM	1560	1500	20%	4%
				MANGANESE	12.5	11.7	20%	7%
				MERCURY	0.05	0.03	20%	50%
				POTASSIUM	750	0	20%	ND
				SODIUM	6860	7080	20%	3%
				VANADIUM	6	2.9	20%	70%
	ORG00201			ALUMINUM	0	22.7	20%	ND
				ANTIMONY	0	1.9	20%	ND
				ARSENIC	3.7	0	20%	ND
				BARIUM	4.5	4.5	20%	0%
				CALCIUM	28500	27900	20%	2%
				IRON	16	16.9	20%	5%
				MAGNESIUM	2990	2890	20%	3%
				MANGANESE	3	2.8	20%	7%
				MERCURY	0	0.05	20%	ND
				POTASSIUM	5460	4830	20%	12%
				SELENIUM	5.4	4.3	20%	23%
				SODIUM	19800	19100	20%	4%
				THALLIUM	0	1.9	20%	ND
				VANADIUM	11	9.3	20%	17%
OR012	05G00301	WATER	12	ALUMINUM	269	253	20%	6%
				BARIUM	10.7	10	20%	7%
				CALCIUM	1600	1560	20%	3%
				IRON	482	463	20%	4%
				MAGNESIUM	1770	1720	20%	3%
				MANGANESE	2.6	2.4	20%	8%
				POTASSIUM	1480	1410	20%	5%
				SODIUM	7540	7240	20%	4%
				VANADIUM	0	3.2	20%	ND
	TOTAL SAMPLES		36					

% OF DUPLICATES COLLECTED	RPD IN	RPD OUT	% WITHIN RPD LIMIT
11.1%	43	3	93.5%

TABLE 2 - 9
GC/MS VOLATILES COMPOUNDS
SOIL SAMPLE AND DUPLICATE PRECISION
NTC-ORLANDO, GROUP 1 SCREENING STUDY
AND BACKGROUND SAMPLING PROGRAM

SDG	SAMPLE ID	MATRIX	NO. ASSC. SAMPLES	COMPOUND	SAMPLE CONC.	DUP CONC	MAX RPD	RPD
OR001	10B00101	SOIL	12	ACETONE	18	0	35%	200%
	09S00100	SOIL	13	NO COMPOUNDS DETECTED				
OR002	06D01201	SOIL	14	NO COMPOUNDS DETECTED				
	07D01201	SOIL		NO COMPOUNDS DETECTED				
OR008	08B00701	SOIL	16	ACETONE	12	15	35%	22%
	03B00301	SOIL		ACETONE	15	20	35%	29%
				METHYLENE CHLORIDE	10	11	35%	10%
OR009	ORB00601	SOIL	18	NO COMPOUNDS DETECTED				
OR010	ORB01401	SOIL	14	NO COMPOUNDS DETECTED				
	ORB01001	SOIL		NO COMPOUNDS DETECTED				
	ORS01201	SOIL		TOLUENE	0	2	35%	NR
	TOTAL SAMPLES		87					

% OF DUPLICATES COLLECTED	RPD IN	RPD OUT	% WITHIN RPD LIMIT
11.5%	4	1	80.0%

TABLE 2 - 10
GC/MS SEMIVOLATILES COMPOUNDS
SOIL SAMPLE AND DUPLICATE PRECISION
NTC-ORLANDO, GROUP 1 SCREENING STUDY
AND BACKGROUND SAMPLING PROGRAM

SDG	SAMPLE ID	MATRIX	NO. ASSC. SAMPLES	COMPOUND	SAMPLE CONC.	DUP CONC	MAX RPD	RPD
OR001	10B00101	SOIL	12	DI-N-BUTYLPHTHALATE	580	640	35%	10%
	09S00100	SOIL	13	NAPHTHALENE	140	0	35%	ND
				ACENAPHTHENE	280	270	35%	4%
				DIBENZOFURAN	140	150	35%	7%
				FLUORENE	240	240	35%	0%
				PHENANTHRENE	1600	1900	35%	17%
				ANTHRACENE	360	430	35%	18%
				CARBOZOLE	240	260	35%	8%
				DI-N-BUTYLPHTHALATE	0	350	35%	ND
				FLUORANTHENE	1900	2400	35%	23%
				PYRENE	1600	2000	35%	22%
				BENZO(A)ANTHRACENE	1000	1300	35%	26%
				CHRYSENE	920	1200	35%	26%
				BENZO(B)FLUORANTHENE	930	1100	35%	17%
				BENZO(K)FLUORANTHENE	640	930	35%	37%
				BENZO(A)PYRENE	780	940	35%	19%
				INDENO(1,2,3-CD)PYRENE	530	630	35%	17%
				BENZO(G,H,I)PERYLENE	540	610	35%	12%
OR002	06D01201	SOIL	14	DI-N-BUTYLPHTHALATE	680	530	35%	25%
	07D01201	SOIL		DI-N-BUTYLPHTHALATE	610	0	35%	200%
				BIS(2-ETHYLHEXYL)PHTHALATE	3200	850	35%	116%
				DI-N-OCTYLPHTHALATE	0	7000	35%	200%
OR008	08B00701	SOIL	19	DI-N-BUTYLPHTHALATE	650	640	35%	2%
	03B00301	SOIL		NO COMPOUNDS DETECTED				
OR009	ORB00601	SOIL	18	BENZO(G,H,I)PERYLENE	0	98	35%	ND
OR010	ORB01001	SOIL	14	BENZO(G,H,I)PERYLENE	0	230	35%	ND
	ORB01401	SOIL		NO COMPOUNDS DETECTED				
	ORB01201	SOIL		NO COMPOUNDS DETECTED				
	TOTAL SAMPLES		90					

% OF DUPLICATES COLLECTED	RPD IN	RPD OUT	% WITHIN RPD LIMIT
11.1%	21	4	84.0%

TABLE 2 - 11
PESTICIDES/PCBs COMPOUNDS
SOIL SAMPLE AND DUPLICATE PRECISION
NTC-ORLANDO, GROUP 1 SCREENING STUDY
AND BACKGROUND SAMPLING PROGRAM

SDG	SAMPLE ID	MATRIX	NO. ASSC. SAMPLES	COMPOUND	SAMPLE CONC.	DUP CONC	MAX RPD	RPD
OR001	10B00101	SOIL	12	NO COMPOUNDS DETECTED				
	09S00100	SOIL	13	4,4'-DDT	700	1300	35%	60%
				ALPHA-CHLORDANE	2300	2700	35%	16%
				GAMMA-CHLORDANE	2400	2900	35%	19%
OR002	07D01201	SOIL	14	4,4'-DDE	6.5	7.2	35%	10%
				4,4'-DDD	5.4	4.6	35%	16%
				ALPHA-CHLORDANE	1	0	35%	NR
				GAMMA-CHLORDANE	1.7	0	35%	NR
	06D01201	SOIL		4,4'-DDE	3.7	2.7	35%	31%
				4,4'-DDD	6.2	4.6	35%	30%
OR008	08B00701	SOIL	19	NO COMPOUNDS DETECTED				
	03B00301	SOIL		NO COMPOUNDS DETECTED				
OR009	ORB00601	SOIL	18	NO COMPOUNDS DETECTED				
OR010	ORB01001	SOIL	14	NO COMPOUNDS DETECTED				
	ORB01401	SOIL		NO COMPOUNDS DETECTED				
	ORS01201	SOIL		4,4'-DDE	12	11	35%	9%
				4,4'-DDT	11	10	35%	10%
				ALPHA-CHLORDANE	2.1	1.6	35%	27%
				GAMMA-CHLORDANE	1.9	1.4	35%	30%
	TOTAL SAMPLES		90					

% OF DUPLICATES COLLECTED	RPD IN	RPD OUT	% WITHIN RPD LIMIT
11.1%	12	1	92.3%

TABLE 2 - 12
CHLORINATED HERBICIDES COMPOUNDS
SOIL SAMPLE AND DUPLICATE PRECISION
NTC-ORLANDO, GROUP 1 SCREENING STUDY
AND BACKGROUND SAMPLING PROGRAM

SDG	SAMPLE ID	MATRIX	NO. ASSC. SAMPLES	COMPOUND	SAMPLE CONC.	DUP CONC	MAX RPD	RPD
OR001	10B00101	SOIL	6	NO COMPOUNDS DETECTED				
	09S00100	SOIL	12	NO COMPOUNDS DETECTED				
OR002	06D01201	SOIL	14	NO COMPOUNDS DETECTED				
	07D01201	SOIL		NO COMPOUNDS DETECTED				
OR008	08B00701	SOIL	5	NO COMPOUNDS DETECTED				
OR009	ORB00601	SOIL	18	NO COMPOUNDS DETECTED				
OR010	ORB01001	SOIL	14	NO COMPOUNDS DETECTED				
	ORB01401	SOIL		NO COMPOUNDS DETECTED				
	ORS01201	SOIL		NO COMPOUNDS DETECTED				
	TOTAL SAMPLES		69					

% OF DUPLICATES COLLECTED	RPD IN	RPD OUT	% WITHIN RPD LIMIT
13.0%	9	0	100.0%

TABLE 2 - 13
TOTAL METALS ANALYTES
SOIL SAMPLE AND DUPLICATE PRECISION
NTC-ORLANDO, GROUP 1 SCREENING STUDY
AND BACKGROUND SAMPLING PROGRAM

SDG	SAMPLE ID	MATRIX	NO. ASSC. SAMPLES	COMPOUND	SAMPLE CONC.	DUP CONC	MAX RPD	RPD
OR001	10B00101	SOIL	12	ALUMINUM	3910	3520	35%	10%
				BARIUM	10.5	10	35%	5%
				CALCIUM	1860	362	35%	135%
				CHROMIUM	4.4	3.7	35%	17%
				COPPER	1.6	1.4	35%	13%
				IRON	164	110	35%	39%
				LEAD	5.5	5	35%	10%
				MAGNESIUM	84.3	54.8	35%	42%
				MANGANESE	1.1	0.69	35%	46%
				MERCURY	0.05	0.06	35%	18%
				VANADIUM	2	1.7	35%	16%
	09S00100	SOIL	13	ALUMINUM	660	679	35%	3%
				BARIUM	12.8	13.4	35%	5%
				CALCIUM	1600	1750	35%	9%
				CHROMIUM	4.4	0	35%	200%
				COPPER	4.8	4	35%	18%
				IRON	347	243	35%	35%
				MAGNESIUM	18.7	23.4	35%	22%
				MANGANESE	41.2	32.4	35%	24%
				MERCURY	6.2	4.4	35%	34%
				SILVER	0.88	0.84	35%	5%
				VANADIUM	1.3	0	35%	ND
				ZINC	45.7	34.3	35%	29%
OR002	07D01201	SOIL	14	ALUMINUM	6720	5580	35%	19%
				BARIUM	65	52.8	35%	21%
				BERYLLIUM	0.11	0.15	35%	31%
				CALCIUM	1550	1960	35%	23%
				CHROMIUM	6.6	6.4	35%	3%
				COPPER	4.7	7.9	35%	51%
				IRON	397	506	35%	24%
				LEAD	10.8	17.2	35%	46%
				MAGNESIUM	118	121	35%	3%
				MANGANESE	2.5	3	35%	18%
				MERCURY	0.04	0.07	35%	55%
				SELENIUM	0.61	1.1	35%	57%
				SODIUM	5.2	0	35%	ND
				VANADIUM	3	3.1	35%	3%
				ZINC	13.7	22.4	35%	48%
	06D01201	SOIL		ALUMINUM	3540	2060	35%	53%
				BARIUM	15.3	16.4	35%	7%
				BERYLLIUM	0.16	0	35%	ND
				CALCIUM	430	649	35%	41%
				CHROMIUM	4	0	35%	ND
				COPPER	3.8	2.3	35%	49%
				IRON	117	166	35%	35%
				LEAD	3.2	5	35%	44%
				MAGNESIUM	41.7	42.7	35%	2%
				MANGANESE	1.1	1.5	35%	31%
				SELENIUM	0.59	0	35%	ND

TABLE 2 - 13, CONTINUED
TOTAL METALS ANALYTES
SOIL SAMPLE AND DUPLICATE PRECISION
NTC-ORLANDO, GROUP 1 SCREENING STUDY
AND BACKGROUND SAMPLING PROGRAM

SDG	SAMPLE ID	MATRIX	NO. ASSC. SAMPLES	COMPOUND	SAMPLE CONC.	DUP CONC	MAX RPD	RPD
OR008	08B00701	SOIL	19	ALUMINUM	155	156	35%	1%
				ARSENIC	0.54	0	35%	ND
				BARIUM	0.88	0.96	35%	9%
				CALCIUM	352	805	35%	78%
				CHROMIUM	0.96	0.91	35%	5%
				COPPER	1.3	0	35%	ND
				IRON	31.5	28.6	35%	10%
				LEAD	0.56	0.67	35%	18%
				MAGNESIUM	8.8	11.5	35%	27%
				MANGANESE	0.6	0.57	35%	5%
				VANADIUM	0	0.91	35%	ND
	03B00301	SOIL		ALUMINUM	300	351	35%	16%
				CALCIUM	14.3	13.9	35%	3%
				CHROMIUM	0.69	0.53	35%	26%
				IRON	50.2	50.3	35%	0%
				LEAD	0.43	0.36	35%	18%
				MANGANESE	0.73	0.7	35%	4%
OR009	0RB00601	SOIL	18	ALUMINUM	10300	10800	35%	5%
				ARSENIC	1.3	1.5	35%	14%
				BARIUM	7.6	11.7	35%	42%
				BERYLLIUM	0.1	0.1	35%	0%
				CALCIUM	19.8	26.3	35%	28%
				CHROMIUM	8.7	8.3	35%	5%
				COBALT	0.67	0.64	35%	5%
				IRON	270	314	35%	15%
				LEAD	5.2	6.6	35%	24%
				MAGNESIUM	20.2	25.4	35%	23%
				MANGANESE	0.3	0.4	35%	29%
				MERCURY	0.07	0.07	35%	0%
				NICKEL	7.4	7.2	35%	3%
				SELENIUM	0.64	0.9	35%	34%
				VANADIUM	4.7	5.1	35%	8%
				ZINC	0.33	0	35%	ND

TABLE 2 - 13, CONTINUED
TOTAL METALS ANALYTES
SOIL SAMPLE AND DUPLICATE PRECISION
NTC-ORLANDO, GROUP 1 SCREENING STUDY
AND BACKGROUND SAMPLING PROGRAM

SDG	SAMPLE ID	MATRIX	NO. ASSC. SAMPLES	COMPOUND	SAMPLE CONC.	DUP CONC	MAX RPD	RPD
OR010	ORB01001	SOIL	14	ALUMINUM	8870	8410	35%	5%
				ARSENIC	1.5	1.1	35%	31%
				BARIUM	10.1	10.9	35%	8%
				BERYLLIUM	0.06	0.08	35%	29%
				CALCIUM	67	66.9	35%	0%
				CHROMIUM	8.5	8.6	35%	1%
				IRON	269	239	35%	12%
				LEAD	4.5	5.1	35%	12%
				MAGNESIUM	39.7	31.7	35%	22%
				MERCURY	0.07	0.07	35%	0%
				NICKEL	2.3	0	35%	ND
				VANADIUM	2.5	2.6	35%	4%
	ORB01401	SOIL		ALUMINUM	370	443	35%	18%
				BARIUM	0.33	0.51	35%	43%
				CALCIUM	24.5	27.1	35%	10%
				CHROMIUM	0.84	1.1	35%	27%
				IRON	42.6	58	35%	31%
				LEAD	0.48	0.46	35%	4%
				MAGNESIUM	13.8	14.5	35%	5%
	ORS01201	SOIL		ALUMINUM	828	1080	35%	26%
				ARSENIC	0.43	0.52	35%	19%
				BARIUM	4.7	4.7	35%	0%
				CALCIUM	4260	3220	35%	28%
				CHROMIUM	2.3	2.4	35%	4%
				IRON	314	373	35%	17%
				LEAD	6.2	6.3	35%	2%
				MAGNESIUM	80	77.2	35%	4%
				MANGANESE	3.2	3.4	35%	6%
				VANADIUM	0.98	1.7	35%	54%
				ZINC	3.5	3.7	35%	ND
	TOTAL SAMPLES		90					

% OF DUPLICATES COLLECTED	RPD IN	RPD OUT	% WITHIN RPD LIMIT
13.0%	93	19	83.0%

TABLE 2 - 14
CYANIDE
SOIL SAMPLE AND DUPLICATE PRECISION
NTC-ORLANDO, GROUP 1 SCREENING STUDY
AND BACKGROUND SAMPLING PROGRAM

SDG	SAMPLE ID	MATRIX	NO. ASSC. SAMPLES	COMPOUND	SAMPLE CONC.	DUP CONC	MAX RPD	RPD
OR002	07D01201	SOIL	14	CYANIDE	0	0.28	35%	ND
	06D01401	SOIL		NO COMPOUND DETECTED				
	TOTAL SAMPLES		14					

% OF DUPLICATES COLLECTED	RPD IN	RPD OUT	% WITHIN RPD LIMIT
14.3%	2	0	100.0%

TABLE 2 - 15
TOTAL PETROLEUM HYDROCARBONS
SOIL SAMPLE AND DUPLICATE PRECISION
NTC-ORLANDO, GROUP 1 SCREENING STUDY
AND BACKGROUND SAMPLING PROGRAM

SDG	SAMPLE ID	MATRIX	NO. ASSC. SAMPLES	COMPOUND	SAMPLE CONC.	DUP CONC	MAX RPD	RPD
OR002	07D01201	SOIL	8	TOTAL PETROLEUM HYDROCARBON	13.2	23	35%	54%
	06D01201			TOTAL PETROLEUM HYDROCARBON	3.1	11.5	35%	115%
OR008	04B00101	SOIL	3	NO COMPOUND DETECTED				
	TOTAL SAMPLES		11					

% OF DUPLICATES COLLECTED	RPD IN	RPD OUT	% WITHIN RPD LIMIT
27.3%	1	2	66.7%

TABLE 2 - 16
TOTAL ORGANIC CARBON
SOIL SAMPLE AND DUPLICATE PRECISION
NTC-ORLANDO, GROUP 1 SCREENING STUDY
AND BACKGROUND SAMPLING PROGRAM

SDG	SAMPLE ID	MATRIX	NO. ASSC. SAMPLES	COMPOUND	SAMPLE CONC.	DUP CONC	MAX RPD	RPD
OR002	07D01201	SOIL	14	TOTAL ORGANIC CARBON	19500	16700	35%	15%
	06D01201			TOTAL ORGANIC CARBON	7460	16600	35%	76%
	TOTAL SAMPLES		**14**					

% OF DUPLICATES COLLECTED	RPD IN	RPD OUT	% WITHIN RPD LIMIT
14.3%	1	1	50.0%

TABLE 2 - 17
LOW CONCENTRATION VOLATILE ORGANICS COMPOUNDS
WATER SAMPLE MATRIX SPIKE/MATRIX SPIKE DUPLICATES
NTC-ORLANDO, GROUP 1 SCREENING STUDY
AND BACKGROUND SAMPLING PROGRAM

MS = MATRIX SPIKE *SAMPLE 02G00101*		SDG OR005		
MSD = MATRIX SPIKE DUPLICATE		MS	MSD	
RPD = RELATIVE PERCENT DIFFERENCE		%R	%R	%RPD
LCVOA COMPOUNDS	UNITS			
VINYL CHLORIDE	ug/L	115	108	6
1,2-DICHLOROETHANE	ug/L	110	122	11
CARBON TETRACHLORIDE	ug/L	*149	134	10
1,2-DICHLOROPROPANE	ug/L	128	131	2
TRICHLOROETHENE	ug/L	*144	131	9
1,1,2-TRICHLOROETHANE	ug/L	127	*142	11
BENZENE	ug/L	140	132	6
CIS-1,3-DICHLOROPROPENE	ug/L	109	118	8
BROMOFORM	ug/L	120	130	8
TETRACHLOROETHENE	ug/L	*150	136	10
1,2-DIBROMOETHANE	ug/L	118	131	10
1,4-DICHLOROBENZENE	ug/L	139	139	2

*** DENOTES VALUE NOT WITHIN QA/QC ADVISORY LIMITS**

CORRESPONDING SDG'S AND ASSOCIATED SAMPLES

OR005: 10G00101, 02G00601, 09G00101, 08G00101, 08G00201, 08G00301, 08G00401, 08G00401D, 00R00011, 01G00101, 01G00201, 01G00301, 01G00401, 09G00201, 09G00301, 09G00401, 00R00014. OOF00001, OOT00008, STORAGE, OOT00005

COMPOUND	ADVISORY LIMITS		RPD
	%R WATER		WATER
VINYL CHLORIDE	60%-140%		40
1,2-DICHLOROETHANE	60%-140%		40
CARBON TETRACHLORIDE	60%-140%		40
1,2-DICHLOROPROPANE	60%-140%		40
TRICHLOROETHENE	60%-140%		40
1,1,2-TRICHLOROETHANE	60%-140%		40
BENZENE	60%-140%		40
CIS-1,3-DICHLOROPROPENE	60%-140%		40
BROMOFORM	60%-140%		40
TETRACHLOROETHENE	60%-140%		40
1,2-DIBROMOETHANE	60%-140%		40
1,4-DICHLOROBENZENE	60%-140%		40

TABLE 2 - 17, CONTINUED
LOW CONCENTRATION VOLATILE ORGANICS COMPOUNDS
WATER SAMPLE MATRIX SPIKE/MATRIX SPIKE DUPLICATES
NTC-ORLANDO, GROUP 1 SCREENING STUDY
AND BACKGROUND SAMPLING PROGRAM

MS = MATRIX SPIKE *SAMPLE 08G00401*		SDG OR005		
MSD = MATRIX SPIKE DUPLICATE		MS	MSD	
RPD = RELATIVE PERCENT DIFFERENCE		%R	%R	%RPD
LCVOA COMPOUNDS	UNITS			
VINYL CHLORIDE	ug/L	110	112	1
1,2-DICHLOROETHANE	ug/L	130	138	5
CARBON TETRACHLORIDE	ug/L	114	119	5
1,2-DICHLOROPROPANE	ug/L	128	125	3
TRICHLOROETHENE	ug/L	126	120	5
1,1,2-TRICHLOROETHANE	ug/L	138	138	0
BENZENE	ug/L	125	120	4
CIS-1,3-DICHLOROPROPENE	ug/L	104	116	11
BROMOFORM	ug/L	120	121	1
TETRACHLOROETHENE	ug/L	127	120	6
1,2-DIBROMOETHANE	ug/L	128	130	2
1,4-DICHLOROBENZENE	ug/L	127	124	3

*** DENOTES VALUE NOT WITHIN QA/QC ADVISORY LIMITS**

CORRESPONDING SDG'S AND ASSOCIATED SAMPLES

OR005: 10G00101, 02G00601, 09G00101, 08G00101, 08G00201, 08G00301, 08G00401, 08G00401D, 00R00011, 01G00101, 01G00201, 01G00301, 01G00401, 09G00201, 09G00301, 09G00401, 00R00014. OOF00001, OOT00008, STORAGE, OOT00005

COMPOUND	ADVISORY LIMITS		RPD
	%R WATER		WATER
VINYL CHLORIDE	60%-140%		40
1,2-DICHLOROETHANE	60%-140%		40
CARBON TETRACHLORIDE	60%-140%		40
1,2-DICHLOROPROPANE	60%-140%		40
TRICHLOROETHENE	60%-140%		40
1,1,2-TRICHLOROETHANE	60%-140%		40
BENZENE	60%-140%		40
CIS-1,3-DICHLOROPROPENE	60%-140%		40
BROMOFORM	60%-140%		40
TETRACHLOROETHENE	60%-140%		40
1,2-DIBROMOETHANE	60%-140%		40
1,4-DICHLOROBENZENE	60%-140%		40

TABLE 2 - 17, CONTINUED
LOW CONCENTRATION VOLATILE ORGANICS COMPOUNDS
WATER SAMPLE MATRIX SPIKE/MATRIX SPIKE DUPLICATES
NTC-ORLANDO, GROUP 1 SCREENING STUDY
AND BACKGROUND SAMPLING PROGRAM

MS = MATRIX SPIKE *SAMPLE ORG00201*		SDG OR011		
MSD = MATRIX SPIKE DUPLICATE		MS	MSD	
RPD = RELATIVE PERCENT DIFFERENCE		%R	%R	%RPD
LCVOA COMPOUNDS	UNITS			
VINYL CHLORIDE	ug/L	77	78	2
1,2-DICHLOROETHANE	ug/L	107	112	4
CARBON TETRACHLORIDE	ug/L	92	94	2
1,2-DICHLOROPROPANE	ug/L	100	102	2
TRICHLOROETHENE	ug/L	97	98	1
1,1,2-TRICHLOROETHANE	ug/L	106	110	4
BENZENE	ug/L	99	101	2
CIS-1,3-DICHLOROPROPENE	ug/L	90	94	4
BROMOFORM	ug/L	98	100	2
TETRACHLOROETHENE	ug/L	98	100	2
1,2-DIBROMOETHANE	ug/L	102	106	3
1,4-DICHLOROBENZENE	ug/L	103	106	3

*** DENOTES VALUE NOT WITHIN QA/QC ADVISORY LIMITS**

CORRESPONDING SDG'S AND ASSOCIATED SAMPLES

OR011: ORG00201, ORG00301, ORG00401, ORG00501, ORG00601, ORG00701, ORG00801, ORG00901, ORG01002, ORG00701D, ORG00201D, OOR00024, OOT00023, OOT00024

COMPOUND	ADVISORY LIMITS		RPD
	%R WATER		WATER
VINYL CHLORIDE	60%-140%		40
1,2-DICHLOROETHANE	60%-140%		40
CARBON TETRACHLORIDE	60%-140%		40
1,2-DICHLOROPROPANE	60%-140%		40
TRICHLOROETHENE	60%-140%		40
1,1,2-TRICHLOROETHANE	60%-140%		40
BENZENE	60%-140%		40
CIS-1,3-DICHLOROPROPENE	60%-140%		40
BROMOFORM	60%-140%		40
TETRACHLOROETHENE	60%-140%		40
1,2-DIBROMOETHANE	60%-140%		40
1,4-DICHLOROBENZENE	60%-140%		40

TABLE 2 - 17, CONTINUED
LOW CONCENTRATION VOLATILE ORGANICS COMPOUNDS
WATER SAMPLE MATRIX SPIKE/MATRIX SPIKE DUPLICATES
NTC-ORLANDO, GROUP 1 SCREENING STUDY
AND BACKGROUND SAMPLING PROGRAM

MS = MATRIX SPIKE *SAMPLE 05G00201*		SDG OR012		
MSD = MATRIX SPIKE DUPLICATE		MS	MSD	
RPD = RELATIVE PERCENT DIFFERENCE		%R	%R	%RPD
LCVOA COMPOUNDS	UNITS			
VINYL CHLORIDE	ug/L	82	82	0
1,2-DICHLOROETHANE	ug/L	107	110	2
CARBON TETRACHLORIDE	ug/L	102	98	3
1,2-DICHLOROPROPANE	ug/L	102	107	5
TRICHLOROETHENE	ug/L	107	110	3
1,1,2-TRICHLOROETHANE	ug/L	108	113	4
BENZENE	ug/L	107	109	1
CIS-1,3-DICHLOROPROPENE	ug/L	94	94	0
BROMOFORM	ug/L	99	96	3
TETRACHLOROETHENE	ug/L	109	110	1
1,2-DIBROMOETHANE	ug/L	101	104	3
1,4-DICHLOROBENZENE	ug/L	106	109	3

*** DENOTES VALUE NOT WITHIN QA/QC ADVISORY LIMITS**

CORRESPONDING SDG'S AND ASSOCIATED SAMPLES

OR012: 03G00101, 03G00201, 03G00301, 04G00401, 05G00101, 05G00201, 05G00301, 08G00501, 08G00601, 08G00701, 08G00801, 08G00901, 05G00301D, 0RG00101, OOT00025

COMPOUND	ADVISORY LIMITS		RPD
	%R WATER		WATER
VINYL CHLORIDE	60%-140%		40
1,2-DICHLOROETHANE	60%-140%		40
CARBON TETRACHLORIDE	60%-140%		40
1,2-DICHLOROPROPANE	60%-140%		40
TRICHLOROETHENE	60%-140%		40
1,1,2-TRICHLOROETHANE	60%-140%		40
BENZENE	60%-140%		40
CIS-1,3-DICHLOROPROPENE	60%-140%		40
BROMOFORM	60%-140%		40
TETRACHLOROETHENE	60%-140%		40
1,2-DIBROMOETHANE	60%-140%		40
1,4-DICHLOROBENZENE	60%-140%		40

TABLE 2 - 18
LOW CONCENTRATION SEMIVOLATILE ORGANICS COMPOUNDS
WATER SAMPLE MATRIX SPIKE/MATRIX SPIKE DUPLICATES
NTC-ORLANDO, GROUP 1 SCREENING STUDY
AND BACKGROUND SAMPLING PROGRAM

MS = MATRIX SPIKE *SAMPLE ORG00201*		SDG OR011		
MSD = MATRIX SPIKE DUPLICATE		MS	MSD	
RPD = RELATIVE PERCENT DIFFERENCE		%R	%R	%RPD
SVOA COMPOUNDS	UNITS			
HEXACHLOROBENZENE	ug/L	91	88	3
PENTACHLOROPHENOL	ug/L	111	102	8
BIS(2-ETHYLHEXYL)PHTHALATE	ug/L	92	113	20

*** DENOTES VALUE NOT WITHIN QA/QC ADVISORY LIMITS**

CORRESPONDING SDG'S AND ASSOCIATED SAMPLES

OR011: ORG00201, ORG00301, ORG00401, ORG00501, ORG00601, ORG00701, ORG00801, ORG00901, ORG01002, ORG00701D, ORG00201D, OOR00024

MS = MATRIX SPIKE *SAMPLE 05G00201*		SDG OR012		
MSD = MATRIX SPIKE DUPLICATE		MS	MSD	
RPD = RELATIVE PERCENT DIFFERENCE		%R	%R	%RPD
SVOA COMPOUNDS	UNITS			
HEXACHLOROBENZENE	ug/L	100	100	0
PENTACHLOROPHENOL	ug/L	89	89	0
BIS(2-ETHYLHEXYL)PHTHALATE	ug/L	54	74	*31

*** DENOTES VALUE NOT WITHIN QA/QC ADVISORY LIMITS**

CORRESPONDING SDG'S AND ASSOCIATED SAMPLES

OR012: 03G00101, 03G00201, 03G00301, 04G00401, 05G00101, 05G00201, 05G00301, 08G00501, 08G00601, 08G00701, 08G00801, 08G00901, 05G00301D, ORG00101

COMPOUND	ADVISORY LIMITS		RPD
	% R WATER		WATER
HEXACHLOROBENZENE	30%-120%		30
PENTACHLOROPHENOL	30%-120%		30
BIS(2-ETHYLHEXYL)PHTHALATE	30%-120%		30

TABLE 2 - 19
SEMIVOLATILE ORGANICS COMPOUNDS
WATER SAMPLE MATRIX SPIKE/MATRIX SPIKE DUPLICATES
NTC-ORLANDO, GROUP 1 SCREENING STUDY
AND BACKGROUND SAMPLING PROGRAM

MS = MATRIX SPIKE *SAMPLE 08G00401*		SDG OR005		
MSD = MATRIX SPIKE DUPLICATE		MS	MSD	
RPD = RELATIVE PERCENT DIFFERENCE		%R	%R	%RPD
SVOA COMPOUNDS	UNITS			
PHENOL	ug/L	63	68	8
2-CHLOROPHENOL	ug/L	79	83	5
1,4-DICHLOROBENZENE	ug/L	72	76	5
N-NITROSO-DI-N-PROP.(1)	ug/L	68	72	6
1,2,4-TRICHLOROBENZENE	ug/L	74	78	5
4-CHLORO-3-METHYLPHENOL	ug/L	88	95	8
ACENAPHTHENE	ug/L	76	80	5
4-NITROPHENOL	ug/L	79	*91	14
2,4-DINITROTOLUENE	ug/L	88	90	2
PENTACHLOROPHENOL	ug/L	95	99	4
PYRENE	ug/L	52	46	12

*** DENOTES VALUE NOT WITHIN QA/QC ADVISORY LIMITS**

CORRESPONDING SDG'S AND ASSOCIATED SAMPLES

OR005: 10G00101, 02G00601, 09G00101, 08G00101, 08G00201, 08G00301, 08G00401, 08G00401D, 00R00011, 01G00101, 01G00201, 01G00301, 01G00401, 09G00201, 09G00301, 09G00401, 00R00014

COMPOUND	ADVISORY LIMITS	RPD
	% R WATER	WATER
PHENOL	12%-110%	42
2-CHLOROPHENOL	27%-123%	40
1,4-DICHLOROBENZENE	36%-97%	28
N-NITROSO-DI-N-PROP.(1)	41%-116%	38
1,2,4-TRICHLOROBENZENE	39%-98%	28
4-CHLORO-3-METHYLPHENO	23%-97%	42
ACENAPHTHENE	46%-118%	31
4-NITROPHENOL	10%-80%	50
2,4-DINITROTOLUENE	24%-96%	38
PENTACHLOROPHENOL	9%-103%	50
PYRENE	26%-127%	31

TABLE 2 - 19, CONTINUED
SEMIVOLATILE ORGANICS COMPOUNDS
WATER SAMPLE MATRIX SPIKE/MATRIX SPIKE DUPLICATES
NTC-ORLANDO, GROUP 1 SCREENING STUDY
AND BACKGROUND SAMPLING PROGRAM

MS = MATRIX SPIKE *SAMPLE ORG00201*		SDG OR011		
MSD = MATRIX SPIKE DUPLICATE		MS	MSD	
RPD = RELATIVE PERCENT DIFFERENCE		%R	%R	%RPD
SVOA COMPOUNDS	UNITS			
PHENOL	ug/L	60	55	9
2-CHLOROPHENOL	ug/L	64	59	8
1,4-DICHLOROBENZENE	ug/L	66	62	6
N-NITROSO-DI-N-PROP.(1)	ug/L	74	68	8
1,2,4-TRICHLOROBENZENE	ug/L	70	64	9
4-CHLORO-3-METHYLPHENOL	ug/L	80	72	10
ACENAPHTHENE	ug/L	74	72	3
4-NITROPHENOL	ug/L	*91	80	13
2,4-DINITROTOLUENE	ug/L	94	86	9
PENTACHLOROPHENOL	ug/L	95	87	9
PYRENE	ug/L	62	64	3

*** DENOTES VALUE NOT WITHIN QA/QC ADVISORY LIMITS**

CORRESPONDING SDG'S AND ASSOCIATED SAMPLES

OR011: ORG00201, ORG00301, ORG00401, ORG00501, ORG00601, ORG00701, ORG00801, ORG00901, ORG01002, ORG00701D, ORG00201D, OOR00024

COMPOUND	ADVISORY LIMITS	RPD
	% R WATER	WATER
PHENOL	12%-110%	42
2-CHLOROPHENOL	27%-123%	40
1,4-DICHLOROBENZENE	36%-97%	28
N-NITROSO-DI-N-PROP.(1)	41%-116%	38
1,2,4-TRICHLOROBENZENE	39%-98%	28
4-CHLORO-3-METHYLPHENO	23%-97%	42
ACENAPHTHENE	46%-118%	31
4-NITROPHENOL	10%-80%	50
2,4-DINITROTOLUENE	24%-96%	38
PENTACHLOROPHENOL	9%-103%	50
PYRENE	26%-127%	31

TABLE 2 - 19, CONTINUED
SEMIVOLATILE ORGANICS COMPOUNDS
WATER SAMPLE MATRIX SPIKE/MATRIX SPIKE DUPLICATES
NTC-ORLANDO, GROUP 1 SCREENING STUDY
AND BACKGROUND SAMPLING PROGRAM

MS = MATRIX SPIKE *SAMPLE 05G00201*		SDG OR012		
MSD = MATRIX SPIKE DUPLICATE		MS	MSD	
RPD = RELATIVE PERCENT DIFFERENCE		%R	%R	%RPD
SVOA COMPOUNDS	UNITS			
PHENOL	ug/L	64	72	12
2-CHLOROPHENOL	ug/L	68	76	11
1,4-DICHLOROBENZENE	ug/L	66	78	17
N-NITROSO-DI-N-PROP.(1)	ug/L	72	82	13
1,2,4-TRICHLOROBENZENE	ug/L	72	82	13
4-CHLORO-3-METHYLPHENOL	ug/L	73	88	19
ACENAPHTHENE	ug/L	74	82	10
4-NITROPHENOL	ug/L	*84	*92	9
2,4-DINITROTOLUENE	ug/L	74	82	10
PENTACHLOROPHENOL	ug/L	84	93	10
PYRENE	ug/L	64	76	17

*** DENOTES VALUE NOT WITHIN QA/QC ADVISORY LIMITS**

CORRESPONDING SDG'S AND ASSOCIATED SAMPLES

OR012: 03G00101, 03G00201, 03G00301, 04G00401, 05G00101, 05G00201, 05G00301, 08G00501, 08G00601, 08G00701, 08G00801, 08G00901, 05G00301D, 0RG00101

COMPOUND	ADVISORY LIMITS	RPD
	% R WATER	WATER
PHENOL	12%-110%	42
2-CHLOROPHENOL	27%-123%	40
1,4-DICHLOROBENZENE	36%-97%	28
N-NITROSO-DI-N-PROP.(1)	41%-116%	38
1,2,4-TRICHLOROBENZENE	39%-98%	28
4-CHLORO-3-METHYLPHENO	23%-97%	42
ACENAPHTHENE	46%-118%	31
4-NITROPHENOL	10%-80%	50
2,4-DINITROTOLUENE	24%-96%	38
PENTACHLOROPHENOL	9%-103%	50
PYRENE	26%-127%	31

TABLE 2 - 20
POLYNUCLEAR AROMATIC HYDROCARBONS
WATER SAMPLE MATRIX SPIKE/MATRIX SPIKE DUPLICATES
NTC-ORLANDO, GROUP 1 SCREENING STUDY
AND BACKGROUND SAMPLING PROGRAM

MS = MATRIX SPIKE *SAMPLE 08G00401*		SDG OR005		
MSD = MATRIX SPIKE DUPLICATE		MS	MSD	
RPD = RELATIVE PERCENT DIFFERENCE		%R	%R	%RPD
PAH COMPOUNDS	UNITS			
BENZO(A)PYRENE	ug/L	37	35	4.2

*** DENOTES VALUE NOT WITHIN QA/QC ADVISORY LIMITS**

CORRESPONDING SDG AND ASSOCIATED SAMPLES

OR005: 10G00101, 02G00601, 09G00101, 08G00101, 08G00201, 08G00301, 08G00401, 08G00401D, 00R00011, 01G00101, 01G00201, 01G00301, 01G00401, 09G00201, 09G00301, 09G00401, 00R00014

MS = MATRIX SPIKE *SAMPLE 08G00401RE*		SDG OR005		
MSD = MATRIX SPIKE DUPLICATE		MS	MSD	
RPD = RELATIVE PERCENT DIFFERENCE		%R	%R	%RPD
PAH COMPOUNDS	UNITS			
BENZO(A)PYRENE	ug/L	65	70	7.4

*** DENOTES VALUE NOT WITHIN QA/QC ADVISORY LIMITS**

CORRESPONDING SDG AND ASSOCIATED SAMPLES

OR005: 10G00101, 02G00601, 09G00101, 08G00101, 08G00201, 08G00301, 08G00401, 08G00401D, 00R00011, 01G00101, 01G00201, 01G00301, 01G00401, 09G00201, 09G00301, 09G00401, 00R00014

COMPOUND	ADVISORY LIMITS		RPD
	%R WATER		WATER
BENZO(A)PYRENE	NR		NR

NR INDICATES THAT LABORATORY DID NOT SUPPLY QC LIMITS

TABLE 2 - 20,CONTINUED
POLYNUCLEAR AROMATIC HYDROCARBONS
WATER SAMPLE MATRIX SPIKE/MATRIX SPIKE DUPLICATES
NTC-ORLANDO, GROUP 1 SCREENING STUDY
AND BACKGROUND SAMPLING PROGRAM

MS = MATRIX SPIKE *SAMPLE ORG00201*		SDG OR011		
MSD = MATRIX SPIKE DUPLICATE		MS	MSD	
RPD = RELATIVE PERCENT DIFFERENCE		%R	%R	%RPD
PAH COMPOUNDS	UNITS			
BENZO(A)PYRENE	ug/L	85	90	5.7

*** DENOTES VALUE NOT WITHIN QA/QC ADVISORY LIMITS**

CORRESPONDING SDG AND ASSOCIATED SAMPLES

OR011: ORG00201, ORG00301, ORG00401, ORG00501, ORG00601, ORG00701, ORG00801, ORG00901, ORG01002, ORG00701D, ORG00201D, OOR00024

MS = MATRIX SPIKE *SAMPLE 05G00201*		SDG OR012		
MSD = MATRIX SPIKE DUPLICATE		MS	MSD	
RPD = RELATIVE PERCENT DIFFERENCE		%R	%R	%RPD
PAH COMPOUNDS	UNITS			
BENZO(A)PYRENE	ug/L	75	80	6.5

*** DENOTES VALUE NOT WITHIN QA/QC ADVISORY LIMITS**

CORRESPONDING SDG AND ASSOCIATED SAMPLES

OR012: 03G00101, 03G00201, 03G00301, 04G00401, 05G00101, 05G00201, 05G00301, 08G00501, 08G00601, 08G00701, 08G00801, 08G00901, 05G00301D, ORG00101

COMPOUND	ADVISORY LIMITS		RPD
	%R WATER		WATER
BENZO(A)PYRENE	NR		NR

NR INDICATES THAT LABORATORY DID NOT SUPPLY QC LIMITS

TABLE 2 - 21
PESTICIDES/PCBS
WATER SAMPLE MATRIX SPIKE/MATRIX SPIKE DUPLICATES
NTC-ORLANDO, GROUP 1 SCREENING STUDY
AND BACKGROUND SAMPLING PROGRAM

MS = MATRIX SPIKE *SAMPLE 08G00401*		SDG OR005		
MSD = MATRIX SPIKE DUPLICATE		MS	MSD	
RPD = RELATIVE PERCENT DIFFERENCE		%R	%R	%RPD
PEST COMPOUNDS	UNITS			
gamma-BHC (Lindane)	ug/L	100	101	1
Heptachlor	ug/L	69	73	6
Aldrin	ug/L	78	84	7
Dieldrin	ug/L	103	102	1
Endrin	ug/L	113	112	1
4,4'-DDT	ug/L	104	104	0

*** DENOTES VALUE NOT WITHIN QA/QC ADVISORY LIMITS**

CORRESPONDING SDG AND ASSOCIATED SAMPLES

OR005: 10G00101, 02G00601, 09G00101, 08G00101, 08G00201, 08G00301, 08G00401, 08G00401D, 00R00011, 01G00101, 01G00201, 01G00301, 01G00401, 09G00201, 09G00301, 09G00401, 00R00014

MS = MATRIX SPIKE *SAMPLE ORG00201*		SDG OR011		
MSD = MATRIX SPIKE DUPLICATE		MS	MSD	
RPD = RELATIVE PERCENT DIFFERENCE		%R	%R	%RPD
PEST COMPOUNDS	UNITS			
gamma-BHC (Lindane)	ug/L	84	78	7
Heptachlor	ug/L	79	73	8
Aldrin	ug/L	80	72	11
Dieldrin	ug/L	98	95	3
Endrin	ug/L	102	98	4
4,4'-DDT	ug/L	92	87	6

*** DENOTES VALUE NOT WITHIN QA/QC ADVISORY LIMITS**

CORRESPONDING SDG AND ASSOCIATED SAMPLES

OR011: ORG00201, ORG00301, ORG00401, ORG00501, ORG00601, ORG00701, ORG00801, ORG00901, ORG01002, ORG00701D, ORG00201D, OOR00024

COMPOUND	ADVISORY LIMITS		RPD
	% R WATER		WATER
gamma-BHC(Lindane)	56%-123%		15
HEPTACHLOR	40%-131%		20
ALDRIN	40%-120%		22
DIELDRIN	52%-126%		18
ENDRIN	56%-121%		21
4,4'-DDT	38%-127%		27

TABLE 2 - 21, CONTINUED
PESTICIDES/PCBS
WATER SAMPLE MATRIX SPIKE/MATRIX SPIKE DUPLICATES
NTC-ORLANDO, GROUP 1 SCREENING STUDY
AND BACKGROUND SAMPLING PROGRAM

MS = MATRIX SPIKE *SAMPLE 05G00201*		SDG OR012		
MSD = MATRIX SPIKE DUPLICATE		MS	MSD	
RPD = RELATIVE PERCENT DIFFERENCE		%R	%R	%RPD
PEST COMPOUNDS	UNITS			
gamma-BHC (Lindane)	ug/L	83	97	*16
Heptachlor	ug/L	50	61	20
Aldrin	ug/L	70	77	10
Dieldrin	ug/L	102	118	15
Endrin	ug/L	106	*122	14
4,4'-DDT	ug/L	90	104	14

*** DENOTES VALUE NOT WITHIN QA/QC ADVISORY LIMITS**

CORRESPONDING SDG AND ASSOCIATED SAMPLES

OR012: 03G00101, 03G00201, 03G00301, 04G00401, 05G00101, 05G00201, 05G00301, 08G00501, 08G00601, 08G00701, 08G00801, 08G00901, 05G00301D, ORG00101

COMPOUND	ADVISORY LIMITS		RPD
	% R WATER		WATER
gamma-BHC(Lindane)	56%-123%		15
HEPTACHLOR	40%-131%		20
ALDRIN	40%-120%		22
DIELDRIN	52%-126%		18
ENDRIN	56%-121%		21
4,4'-DDT	38%-127%		27

TABLE 2 - 22
CHLORINATED HERBICIDES
WATER SAMPLE MATRIX SPIKE/MATRIX SPIKE DUPLICATES
NTC-ORLANDO, GROUP 1 SCREENING STUDY
AND BACKGROUND SAMPLING PROGRAM

MS = MATRIX SPI *SAMPLE 08G00401*		SDG OR005		
MSD = MATRIX SPIKE DUPLICATE		MS	MSD	
RPD = RELATIVE PERCENT DIFFERENCE		%R	%R	%RPD
HERB COMPOUNDS	UNITS			
DALAPON	ug/L	85	74	14
DICAMBA	ug/L	102	101	1
MCPP	ug/L	86	85	1
MCPA	ug/L	81	83	2
2,4-DP	ug/L	113	118	4
2,4-D	ug/L	95	108	13
SILVEX	ug/L	101	103	2
2,4,5-T	ug/L	104	113	9
2,4-DC	ug/L	105	105	0
DINOSEB	ug/L	123	113	11

*** DENOTES VALUE NOT WITHIN QA/QC ADVISORY LIMITS**

CORRESPONDING SDG AND ASSOCIATED SAMPLES

OR005: 09G00101, 08G00101, 08G00201, 08G00301, 08G00401, 08G00401D, 00R00011, 09G00201, 09G00201, 09G00301, 09G00401

COMPOUND	ADVISORY LIMITS		RPD
	% R WATER		WATER
DALAPON	NR		NR
DICAMBA	NR		NR
MCPP	NR		NR
MCPA	NR		NR
2,4-DP	NR		NR
2,4-D	NR		NR
SILVEX	NR		NR
2,4,5-T	NR		NR
2,4-DC	NR		NR
DINOSEB	NR		NR

NR INDICATES THAT THE LABORATORY DID NOT PROVIDE QC LIMITS.

TABLE 2 - 22, CONTINUED
CHLORINATED HERBICIDES
WATER SAMPLE MATRIX SPIKE/MATRIX SPIKE DUPLICATES
NTC-ORLANDO, GROUP 1 SCREENING STUDY
AND BACKGROUND SAMPLING PROGRAM

MS = MATRIX SPI *SAMPLE ORG00201*		SDG OR011		
MSD = MATRIX SPIKE DUPLICATE		MS	MSD	
RPD = RELATIVE PERCENT DIFFERENCE		%R	%R	%RPD
HERB COMPOUNDS	UNITS			
DALAPON	ug/L	88	66	28
DICAMBA	ug/L	105	99	6
MCPP	ug/L	110	105	5
MCPA	ug/L	90	88	2
2,4-DP	ug/L	126	121	4
2,4-D	ug/L	97	97	0
SILVEX	ug/L	110	107	2
2,4,5-T	ug/L	116	112	3
2,4-DC	ug/L	115	108	6
DINOSEB	ug/L	103	102	1

*** DENOTES VALUE NOT WITHIN QA/QC ADVISORY LIMITS**

CORRESPONDING SDG AND ASSOCIATED SAMPLES

OR011: ORG00201, ORG00301, ORG00401, ORG00501, ORG00601, ORG00701, ORG00801, ORG00901, ORG01002, ORG00701D, ORG00201D, OOR00024
OR012: 08G00501, 08G00601, 08G00701, 08G00801, 08G00901, ORG00101

COMPOUND	ADVISORY LIMITS		RPD
	% R WATER		WATER
DALAPON	NR		NR
DICAMBA	NR		NR
MCPP	NR		NR
MCPA	NR		NR
2,4-DP	NR		NR
2,4-D	NR		NR
SILVEX	NR		NR
2,4,5-T	NR		NR
2,4-DC	NR		NR
DINOSEB	NR		NR

NR INDICATES THAT THE LABORATORY DID NOT PROVIDE QC LIMITS.

TABLE 2 - 23
TOTAL METALS
WATER SAMPLE MATRIX SPIKE/ DUPLICATES
NTC-ORLANDO, GROUP 1 SCREENING STUDY
AND BACKGROUND SAMPLING PROGRAM

MS = MATRIX SPIKE *SAMPLE 08G00401*		SDG OR005	
MD = MATRIX DUPLICATE *SAMPLE 08G00401*		MS	MD
RPD = RELATIVE PERCENT DIFFERENCE		%R	RPD
METALS COMPOUNDS	UNITS		
ALUMINUM	ug/L	85.0	14.1
ANTIMONY	ug/L	95.6	34.7
ARSENIC	ug/L	116	0.7
BARIUM	ug/L	84.3	2.5
BERYLLIUM	ug/L	86.5	NC
CADMIUM	ug/L	79.4	NC
CALCIUM	ug/L	NR	6.6
CHROMIUM	ug/L	89.8	11.8
COBALT	ug/L	79.0	NC
COPPER	ug/L	81.5	200
IRON	ug/L	84.7	7.1
LEAD	ug/L	91.4	NC
MAGNESIUM	ug/L	NR	6.6
MANGANESE	ug/L	80.6	2.7
MERCURY	ug/L	88.5	NC
NICKEL	ug/L	91.9	200
POTASSIUM	ug/L	NR	7.0
SELENIUM	ug/L	83.0	NC
SILVER	ug/L	84.1	NC
SODIUM	ug/L	NR	6.5
THALLIUM	ug/L	108.1	NC
VANADIUM	ug/L	76.0	0.0
ZINC	ug/L	91.9	4.8

*** DENOTES VALUE NOT WITHIN QA/QC ADVISORY LIMITS**

NC DENOTES THAT BOTH SAMPLES ARE NON-DETECT AND A RPD CANNOT BE CALCULATED.
NR DENOTES THAT A MATRIX SPIKE RECOVERY CALCULATION IS NOT REQUIRED.

CORRESPONDING SDG'S AND ASSOCIATED SAMPLES

OR005: 10G00101, 02G00601, 09G00101, 08G00101, 08G00201, 08G00301, 08G00401, 08G00401D, 00R00011, 01G00101, 01G00201, 01G00301, 01G00401, 09G00201, 09G00301, 09G00401, 00R00014

COMPOUND	ADVISORY LIMITS		RPD
	%R WATER		WATER
ALL COMPOUNDS	75%-125%		+/-20 OR +/-CR

+/- CRDL = RPD Limits applicable only on values 5 times the Contract Required Detection Limit (CRDL)

TABLE 2 - 23, CONTINUED
TOTAL METALS
WATER SAMPLE MATRIX SPIKE/ DUPLICATES
NTC-ORLANDO, GROUP 1 SCREENING STUDY
AND BACKGROUND SAMPLING PROGRAM

MS = MATRIX SPIKE *SAMPLE ORG00201*		SDG OR011	
MD = MATRIX DUPLICATE *SAMPLE ORG00201*		MS	MD
RPD = RELATIVE PERCENT DIFFERENCE		%R	RPD
METALS COMPOUNDS	UNITS		
ALUMINUM	ug/L	95.4	NC
ANTIMONY	ug/L	99.4	NC
ARSENIC	ug/L	95.8	60.9
BARIUM	ug/L	89.9	1.8
BERYLLIUM	ug/L	92.9	NC
CADMIUM	ug/L	94.3	NC
CALCIUM	ug/L	NR	0.4
CHROMIUM	ug/L	93.0	NC
COBALT	ug/L	90.2	NC
COPPER	ug/L	89.5	NC
IRON	ug/L	94.4	6.3
LEAD	ug/L	100	NC
MAGNESIUM	ug/L	NR	1.5
MANGANESE	ug/L	90.6	6.3
MERCURY	ug/L	96.4	NC
NICKEL	ug/L	92.7	NC
POTASSIUM	ug/L	NR	6.2
SELENIUM	ug/L	75.0	32.3
SILVER	ug/L	84.2	NC
SODIUM	ug/L	NR	0.7
THALLIUM	ug/L	106	NC
VANADIUM	ug/L	84.4	19.0
ZINC	ug/L	94.0	6.3

*** DENOTES VALUE NOT WITHIN QA/QC ADVISORY LIMITS**

NC DENOTES THAT BOTH SAMPLES ARE NON-DETECT AND A RPD CANNOT BE CALCULAT
NR DENOTES THAT A MATRIX SPIKE RECOVERY CALCULATION IS NOT REQUIRED.

CORRESPONDING SDG'S AND ASSOCIATED SAMPLES

OR011: ORG00201, ORG00301, ORG00401, ORG00501, ORG00601, ORG00701, ORG00801, ORG00901, ORG01002, ORG00701D, ORG00201D, OOR00024

COMPOUND	ADVISORY LIMITS		RPD
	%R WATER		WATER
ALL COMPOUNDS	75%-125%		+/-20 OR +/-CR

+/- CRDL = RPD Limits applicable only on values 5 times the Contract Required Detection Limit (CRDL)

TABLE 2 - 23, CONTINUED
TOTAL METALS
WATER SAMPLE MATRIX SPIKE/ DUPLICATES
NTC-ORLANDO, GROUP 1 SCREENING STUDY
AND BACKGROUND SAMPLING PROGRAM

MS = MATRIX SPIKE *SAMPLE 05G00201*		SDG OR012	
MD = MATRIX DUPLICATE *SAMPLE 05G00201*		MS	MD
RPD = RELATIVE PERCENT DIFFERENCE		%R	RPD
METALS COMPOUNDS	UNITS		
ALUMINUM	ug/L	95.6	5.0
ANTIMONY	ug/L	93.2	200.0
ARSENIC	ug/L	96.5	NC
BARIUM	ug/L	93.6	9.3
BERYLLIUM	ug/L	95.8	NC
CADMIUM	ug/L	104	NC
CALCIUM	ug/L	NR	0.6
CHROMIUM	ug/L	97.7	NC
COBALT	ug/L	93.1	NC
COPPER	ug/L	93.0	200
IRON	ug/L	96.2	0.9
LEAD	ug/L	100	22.1
MAGNESIUM	ug/L	NR	0.2
MANGANESE	ug/L	94.3	8.3
MERCURY	ug/L	83.6	NC
NICKEL	ug/L	98.4	NC
POTASSIUM	ug/L	NR	7.3
SELENIUM	ug/L	102	NC
SILVER	ug/L	93.1	NC
SODIUM	ug/L	NR	1.5
THALLIUM	ug/L	105	NC
VANADIUM	ug/L	88.4	NC
ZINC	ug/L	98.3	14.7

*** DENOTES VALUE NOT WITHIN QA/QC ADVISORY LIMITS**

NC DENOTES THAT BOTH SAMPLES ARE NON-DETECT AND A RPD CANNOT BE CALCULAT
NR DENOTES THAT A MATRIX SPIKE RECOVERY CALCULATION IS NOT REQUIRED.

CORRESPONDING SDG'S AND ASSOCIATED SAMPLES

OR012: 03G00101, 03G00201, 03G00301, 04G00401, 05G00101, 05G00201, 05G00301, 08G00501, 08G00601, 08G00701, 08G00801, 08G00901, 05G00301D, 0RG00101

COMPOUND	ADVISORY LIMITS		RPD
	%R WATER		WATER
ALL COMPOUNDS	75%-125%		+/-20 OR +/-CR

+/- CRDL = RPD Limits applicable only on values 5 times the Contract Required Detection Limit (CRDL)

TABLE 2 - 24
GC/MS VOLATILE ORGANICS COMPOUNDS
SOIL SAMPLE MATRIX SPIKE/MATRIX SPIKE DUPLICATES
NTC-ORLANDO, GROUP 1 SCREENING STUDY
AND BACKGROUND SAMPLING PROGRAM

MS = MATRIX SPIKE *SAMPLE 09S00200*		SDG OR001		
MSD = MATRIX SPIKE DUPLICATE		MS	MSD	
RPD = RELATIVE PERCENT DIFFERENCE		%R	%R	%RPD
VOA COMPOUNDS	UNITS			
1,1-DICHLOROETHENE	ug/Kg	142	142	0
TRICHLOROETHENE	ug/Kg	109	105	4
BENZENE	ug/Kg	109	107	2
TOLUENE	ug/Kg	116	114	2
CHLOROBENZENE	ug/Kg	112	107	4

*** DENOTES VALUE NOT WITHIN QA/QC ADVISORY LIMITS**

CORRESPONDING SDG'S AND ASSOCIATED SAMPLES

OR001: 01S00100, 09S00100, 09S00100D, 09S00200, 09S00300, 09S00400, 01B00101, 01B00401, 08S00100, 08S00200, 08S00300, 08S00400, 08S00500, 08S00600, 08S00700, 08S00800, 01B00201, 01B00301, 09B00101, 10B00101, 10B00101D, 08B00101

COMPOUND	ADVISORY LIMITS		RPD
	%R SOIL		WATER
1,1-DICHLOROETHENE	59%-172%		22
TRICHLOROETHENE	66%-142%		21
BENZENE	62%-137%		24
TOLUENE	59%-139%		21
CHLOROBENZENE	60%-133%		21

TABLE 2 - 24, CONTINUED
GC/MS VOLATILE ORGANICS COMPOUNDS
SOIL SAMPLE MATRIX SPIKE/MATRIX SPIKE DUPLICATES
NTC-ORLANDO, GROUP 1 SCREENING STUDY
AND BACKGROUND SAMPLING PROGRAM

MS = MATRIX SPIKE *SAMPLE 07D01201*		SDG OR002		
MSD = MATRIX SPIKE DUPLICATE		MS	MSD	
RPD = RELATIVE PERCENT DIFFERENCE		%R	%R	%RPD
VOA COMPOUNDS	UNITS			
1,1-DICHLOROETHENE	ug/Kg	94	92	2
TRICHLOROETHENE	ug/Kg	92	84	9
BENZENE	ug/Kg	88	88	0
TOLUENE	ug/Kg	96	105	9
CHLOROBENZENE	ug/Kg	98	101	3

*** DENOTES VALUE NOT WITHIN QA/QC ADVISORY LIMITS**

CORRESPONDING SDG'S AND ASSOCIATED SAMPLES

OR002: 08B00201, 08B00301, 08B00401, 07D00101, 07D00201, 07D00301, 01B00101, 07D00401, 07D00501, 07D00601, 07D01401, 07D01001, 07D01201, 07D01301, 07D01501, 02B00601, 07D01201D, 06D01201, 06D01301, 06D01401, 06D01201D

COMPOUND	ADVISORY LIMITS		RPD
	%R SOIL		WATER
1,1-DICHLOROETHENE	59%-172%		22
TRICHLOROETHENE	66%-142%		21
BENZENE	62%-137%		24
TOLUENE	59%-139%		21
CHLOROBENZENE	60%-133%		21

TABLE 2 - 24, CONTINUED
GC/MS VOLATILE ORGANICS COMPOUNDS
SOIL SAMPLE MATRIX SPIKE/MATRIX SPIKE DUPLICATES
NTC-ORLANDO, GROUP 1 SCREENING STUDY
AND BACKGROUND SAMPLING PROGRAM

MS = MATRIX SPIKE *SAMPLE 08B00801*		SDG OR008		
MSD = MATRIX SPIKE DUPLICATE		MS	MSD	
RPD = RELATIVE PERCENT DIFFERENCE		%R	%R	%RPD
VOA COMPOUNDS	UNITS			
1,1-DICHLOROETHENE	ug/Kg	95	103	8
TRICHLOROETHENE	ug/Kg	97	102	5
BENZENE	ug/Kg	85	90	6
TOLUENE	ug/Kg	103	102	1
CHLOROBENZENE	ug/Kg	98	97	1

*** DENOTES VALUE NOT WITHIN QA/QC ADVISORY LIMITS**

CORRESPONDING SDG'S AND ASSOCIATED SAMPLES

OR008: 08B00501, 008B00601, 05B00301, 08B00701, 08B00801, 08B00901, 08B00701D, 03S00101, 03S00201, 03B00101, 03B00201, 05B00101, 05B00201, 03S00301, 03S00401, 00B00301D, 03B00301, 03B00401, 04B00101, 04B00201, 04B00301

COMPOUND	ADVISORY LIMITS		RPD
	%R SOIL		WATER
1,1-DICHLOROETHENE	59%-172%		22
TRICHLOROETHENE	66%-142%		21
BENZENE	62%-137%		24
TOLUENE	59%-139%		21
CHLOROBENZENE	60%-133%		21

TABLE 2 - 24, CONTINUED
GC/MS VOLATILE ORGANICS COMPOUNDS
SOIL SAMPLE MATRIX SPIKE/MATRIX SPIKE DUPLICATES
NTC-ORLANDO, GROUP 1 SCREENING STUDY
AND BACKGROUND SAMPLING PROGRAM

MS = MATRIX SPIKE *SAMPLE ORB00701*		SDG OR009		
MSD = MATRIX SPIKE DUPLICATE		MS	MSD	
RPD = RELATIVE PERCENT DIFFERENCE		%R	%R	%RPD
VOA COMPOUNDS	UNITS			
1,1-DICHLOROETHENE	ug/Kg	103	107	4
TRICHLOROETHENE	ug/Kg	108	108	0
BENZENE	ug/Kg	88	93	6
TOLUENE	ug/Kg	102	105	3
CHLOROBENZENE	ug/Kg	102	107	5

*** DENOTES VALUE NOT WITHIN QA/QC ADVISORY LIMITS**

CORRESPONDING SDG'S AND ASSOCIATED SAMPLES

OR009: ORB00101, ORS00101, ORB00301, ORS00301, ORB00201, ORS00201, ORB00401, ORS00401, ORB00501, ORS00501, ORS00601, ORB00601, ORB00701, ORS00701, ORB00801, ORS00801, ORB00901, ORS00901, ORB00601D

COMPOUND	ADVISORY LIMITS		RPD
	%R SOIL		WATER
1,1-DICHLOROETHENE	59%-172%		22
TRICHLOROETHENE	66%-142%		21
BENZENE	62%-137%		24
TOLUENE	59%-139%		21
CHLOROBENZENE	60%-133%		21

TABLE 2 - 24, CONTINUED
GC/MS VOLATILE ORGANICS COMPOUNDS
SOIL SAMPLE MATRIX SPIKE/MATRIX SPIKE DUPLICATES
NTC-ORLANDO, GROUP 1 SCREENING STUDY
AND BACKGROUND SAMPLING PROGRAM

MS = MATRIX SPIKE *SAMPLE ORB01201*		SDG OR010		
MSD = MATRIX SPIKE DUPLICATE		MS	MSD	
RPD = RELATIVE PERCENT DIFFERENCE		%R	%R	%RPD
VOA COMPOUNDS	UNITS			
1,1-DICHLOROETHENE	ug/Kg	100	100	0
TRICHLOROETHENE	ug/Kg	102	102	0
BENZENE	ug/Kg	96	94	2
TOLUENE	ug/Kg	102	102	0
CHLOROBENZENE	ug/Kg	104	102	2

*** DENOTES VALUE NOT WITHIN QA/QC ADVISORY LIMITS**

CORRESPONDING SDG'S AND ASSOCIATED SAMPLES

OR010: ORB01001, ORS01001, ORB01101, ORS01101, ORB01201, ORS01201, ORB01401, ORS01401, ORB01501, ORS01501, ORB01601, ORS01601, ORB01001D, ORB01401D, ORS01201D, ORB01301, ORS01301

COMPOUND	ADVISORY LIMITS		RPD
	%R SOIL		WATER
1,1-DICHLOROETHENE	59%-172%		22
TRICHLOROETHENE	66%-142%		21
BENZENE	62%-137%		24
TOLUENE	59%-139%		21
CHLOROBENZENE	60%-133%		21

TABLE 2 - 25
SEMIVOLATILE ORGANICS COMPOUNDS
SOIL SAMPLE MATRIX SPIKE/MATRIX SPIKE DUPLICATES
NTC-ORLANDO, GROUP 1 SCREENING STUDY
AND BACKGROUND SAMPLING PROGRAM

MS = MATRIX SPIKE *SAMPLE 09S00200*		SDG OR005		
MSD = MATRIX SPIKE DUPLICATE		MS	MSD	
RPD = RELATIVE PERCENT DIFFERENCE		%R	%R	%RPD
SVOA COMPOUNDS	UNITS			
PHENOL	ug/Kg	69	72	4
2-CHLOROPHENOL	ug/Kg	66	72	9
1,4-DICHLOROBENZENE	ug/Kg	68	74	8
N-NITROSO-DI-N-PROP.(1)	ug/Kg	84	89	6
1,2,4-TRICHLOROBENZENE	ug/Kg	68	74	8
4-CHLORO-3-METHYLPHENOL	ug/Kg	76	83	9
ACENAPHTHENE	ug/Kg	74	79	6
4-NITROPHENOL	ug/Kg	69	76	10
2,4-DINITROTOLUENE	ug/Kg	79	89	12
PENTACHLOROPHENOL	ug/Kg	76	79	4
PYRENE	ug/Kg	63	74	16

*** DENOTES VALUE NOT WITHIN QA/QC ADVISORY LIMITS**

CORRESPONDING SDG'S AND ASSOCIATED SAMPLES

OR001: 01S00100, 09S00100, 09S00100D, 09S00200, 09S00300, 09S00400, 01B00101, 01B00401, 08S00100, 08S00200, 08S00300, 08S00400, 08S00500, 08S00600, 08S00700, 08S00800, 01B00201, 01B00301, 09B00101, 10B00101, 10B00101D, 08B00101

COMPOUND	ADVISORY LIMITS		RPD
	% R SOIL		SOIL
PHENOL	26%-90%		35
2-CHLOROPHENOL	25%-102%		50
1,4-DICHLOROBENZENE	28%-104%		27
N-NITROSO-DI-N-PROP.(1)	41%-126%		38
1,2,4-TRICHLOROBENZENE	38%-107%		23
4-CHLORO-3-METHYLPHENO	26%-103%		33
ACENAPHTHENE	31%-137%		19
4-NITROPHENOL	11%-114%		50
2,4-DINITROTOLUENE	28%-89%		47
PENTACHLOROPHENOL	17%-109%		47
PYRENE	35%-142%		36

TABLE 2 - 25, CONTINUED
SEMIVOLATILE ORGANICS COMPOUNDS
SOIL SAMPLE MATRIX SPIKE/MATRIX SPIKE DUPLICATES
NTC-ORLANDO, GROUP 1 SCREENING STUDY
AND BACKGROUND SAMPLING PROGRAM

MS = MATRIX SPIKE *SAMPLE 07D01201*		SDG OR002		
MSD = MATRIX SPIKE DUPLICATE		MS	MSD	
RPD = RELATIVE PERCENT DIFFERENCE		%R	%R	%RPD
SVOA COMPOUNDS	UNITS			
PHENOL	ug/Kg	65	70	7
2-CHLOROPHENOL	ug/Kg	70	74	6
1,4-DICHLOROBENZENE	ug/Kg	70	74	6
N-NITROSO-DI-N-PROP.(1)	ug/Kg	74	78	5
1,2,4-TRICHLOROBENZENE	ug/Kg	74	78	5
4-CHLORO-3-METHYLPHENOL	ug/Kg	74	82	10
ACENAPHTHENE	ug/Kg	74	78	5
4-NITROPHENOL	ug/Kg	68	79	15
2,4-DINITROTOLUENE	ug/Kg	70	74	6
PENTACHLOROPHENOL	ug/Kg	76	76	0
PYRENE	ug/Kg	56	61	8

*** DENOTES VALUE NOT WITHIN QA/QC ADVISORY LIMITS**

CORRESPONDING SDG'S AND ASSOCIATED SAMPLES

OR002: 08B00201, 08B00301, 08B00401, 07D00101, 07D00201, 07D00301, 01B00101, 07D00401, 07D00501, 07D00601, 07D01401, 07D01001, 07D01201, 07D01301, 07D01501, 02B00601, 07D01201D, 06D01201, 06D01301, 06D01401, 06D01201D

COMPOUND	ADVISORY LIMITS	RPD
	% R SOIL	SOIL
PHENOL	26%-90%	35
2-CHLOROPHENOL	25%-102%	50
1,4-DICHLOROBENZENE	28%-104%	27
N-NITROSO-DI-N-PROP.(1)	41%-126%	38
1,2,4-TRICHLOROBENZENE	38%-107%	23
4-CHLORO-3-METHYLPHENO	26%-103%	33
ACENAPHTHENE	31%-137%	19
4-NITROPHENOL	11%-114%	50
2,4-DINITROTOLUENE	28%-89%	47
PENTACHLOROPHENOL	17%-109%	47
PYRENE	35%-142%	36

TABLE 2 - 25, CONTINUED
SEMIVOLATILE ORGANICS COMPOUNDS
SOIL SAMPLE MATRIX SPIKE/MATRIX SPIKE DUPLICATES
NTC-ORLANDO, GROUP 1 SCREENING STUDY
AND BACKGROUND SAMPLING PROGRAM

MS = MATRIX SPIKE *SAMPLE 08B00801*		SDG OR008		
MSD = MATRIX SPIKE DUPLICATE		MS	MSD	
RPD = RELATIVE PERCENT DIFFERENCE		%R	%R	%RPD
SVOA COMPOUNDS	UNITS			
PHENOL	ug/Kg	73	67	8
2-CHLOROPHENOL	ug/Kg	77	67	14
1,4-DICHLOROBENZENE	ug/Kg	80	75	6
N-NITROSO-DI-N-PROP.(1)	ug/Kg	80	75	6
1,2,4-TRICHLOROBENZENE	ug/Kg	90	85	6
4-CHLORO-3-METHYLPHENOL	ug/Kg	93	70	28
ACENAPHTHENE	ug/Kg	85	80	6
4-NITROPHENOL	ug/Kg	*123	93	28
2,4-DINITROTOLUENE	ug/Kg	*110	*100	10
PENTACHLOROPHENOL	ug/Kg	107	97	10
PYRENE	ug/Kg	70	70	0

*** DENOTES VALUE NOT WITHIN QA/QC ADVISORY LIMITS**

CORRESPONDING SDG'S AND ASSOCIATED SAMPLES

OR008: 08B00501, 08B00601, 05B00301, 08B00701, 08B00801, 08B00901, 08B00701D, 03S00101, 03S00201, 03B00101, 03B00201, 05B00101, 05B00201, 03S00301, 03S00401, 00B00301D, 03B00301, 03B00401, 04B00101, 04B00201, 04B00301

COMPOUND	ADVISORY LIMITS	RPD
	% R SOIL	SOIL
PHENOL	26%-90%	35
2-CHLOROPHENOL	25%-102%	50
1,4-DICHLOROBENZENE	28%-104%	27
N-NITROSO-DI-N-PROP.(1)	41%-126%	38
1,2,4-TRICHLOROBENZENE	38%-107%	23
4-CHLORO-3-METHYLPHENO	26%-103%	33
ACENAPHTHENE	31%-137%	19
4-NITROPHENOL	11%-114%	50
2,4-DINITROTOLUENE	28%-89%	47
PENTACHLOROPHENOL	17%-109%	47
PYRENE	35%-142%	36

TABLE 2 - 25, CONTINUED
SEMIVOLATILE ORGANICS COMPOUNDS
SOIL SAMPLE MATRIX SPIKE/MATRIX SPIKE DUPLICATES
NTC-ORLANDO, GROUP 1 SCREENING STUDY
AND BACKGROUND SAMPLING PROGRAM

MS = MATRIX SPIKE *SAMPLE ORB00701*		SDG OR009		
MSD = MATRIX SPIKE DUPLICATE		MS	MSD	
RPD = RELATIVE PERCENT DIFFERENCE		%R	%R	%RPD
SVOA COMPOUNDS	UNITS			
PHENOL	ug/Kg	77	77	0
2-CHLOROPHENOL	ug/Kg	93	90	3
1,4-DICHLOROBENZENE	ug/Kg	90	80	12
N-NITROSO-DI-N-PROP.(1)	ug/Kg	105	95	10
1,2,4-TRICHLOROBENZENE	ug/Kg	100	95	5
4-CHLORO-3-METHYLPHENOL	ug/Kg	103	97	6
ACENAPHTHENE	ug/Kg	100	90	10
4-NITROPHENOL	ug/Kg	93	87	7
2,4-DINITROTOLUENE	ug/Kg	*90	*90	0
PENTACHLOROPHENOL	ug/Kg	*137	*133	3
PYRENE	ug/Kg	65	60	8

*** DENOTES VALUE NOT WITHIN QA/QC ADVISORY LIMITS**

CORRESPONDING SDG'S AND ASSOCIATED SAMPLES

OR009: ORB00101, ORS00101, ORB00301, ORS00301, ORB00201, ORS00201, ORB00401, ORS00401, ORB00501, ORS00501, ORS00601, ORB00601, ORB00701, ORS00701, ORB00801, ORS00801, ORB00901, ORS00901, ORB00601D

COMPOUND	ADVISORY LIMITS	RPD
	% R SOIL	SOIL
PHENOL	26%-90%	35
2-CHLOROPHENOL	25%-102%	50
1,4-DICHLOROBENZENE	28%-104%	27
N-NITROSO-DI-N-PROP.(1)	41%-126%	38
1,2,4-TRICHLOROBENZENE	38%-107%	23
4-CHLORO-3-METHYLPHENO	26%-103%	33
ACENAPHTHENE	31%-137%	19
4-NITROPHENOL	11%-114%	50
2,4-DINITROTOLUENE	28%-89%	47
PENTACHLOROPHENOL	17%-109%	47
PYRENE	35%-142%	36

TABLE 2 - 25, CONTINUED
SEMIVOLATILE ORGANICS COMPOUNDS
SOIL SAMPLE MATRIX SPIKE/MATRIX SPIKE DUPLICATES
NTC-ORLANDO, GROUP 1 SCREENING STUDY
AND BACKGROUND SAMPLING PROGRAM

MS = MATRIX SPIKE *MPLE ORB01201*		SDG OR010		
MSD = MATRIX SPIKE DUPLICATE		MS	MSD	
RPD = RELATIVE PERCENT DIFFERENCE		%R	%R	%RPD
SVOA COMPOUNDS	UNITS			
PHENOL	ug/Kg	69	69	0
2-CHLOROPHENOL	ug/Kg	58	58	0
1,4-DICHLOROBENZENE	ug/Kg	70	70	0
N-NITROSO-DI-N-PROP.(1)	ug/Kg	106	100	6
1,2,4-TRICHLOROBENZENE	ug/Kg	70	70	0
4-CHLORO-3-METHYLPHENOL	ug/Kg	62	73	16
ACENAPHTHENE	ug/Kg	76	76	0
4-NITROPHENOL	ug/Kg	108	100	8
2,4-DINITROTOLUENE	ug/Kg	*94	88	6
PENTACHLOROPHENOL	ug/Kg	73	62	16
PYRENE	ug/Kg	76	76	0

*** DENOTES VALUE NOT WITHIN QA/QC ADVISORY LIMITS**

CORRESPONDING SDG'S AND ASSOCIATED SAMPLES

OR010: ORB01001, ORS01001, ORB01101, ORS01101, ORB01201, ORS01201, ORB01401, ORS01401, ORB01501, ORS01501, ORB01601, ORS01601, ORB01001D, ORB01401D, ORS01201D, ORB01301, ORS01301

COMPOUND	ADVISORY LIMITS		RPD
	% R SOIL		SOIL
PHENOL	26%-90%		35
2-CHLOROPHENOL	25%-102%		50
1,4-DICHLOROBENZENE	28%-104%		27
N-NITROSO-DI-N-PROP.(1)	41%-126%		38
1,2,4-TRICHLOROBENZENE	38%-107%		23
4-CHLORO-3-METHYLPHEN	26%-103%		33
ACENAPHTHENE	31%-137%		19
4-NITROPHENOL	11%-114%		50
2,4-DINITROTOLUENE	28%-89%		47
PENTACHLOROPHENOL	17%-109%		47
PYRENE	35%-142%		36

TABLE 2 - 26
PESTICIDES/PCBS
SOIL SAMPLE MATRIX SPIKE/MATRIX SPIKE DUPLICATES
NTC-ORLANDO, GROUP 1 SCREENING STUDY
AND BACKGROUND SAMPLING PROGRAM

MS = MATRIX SPIKE *SAMPLE 09S00200*		SDG OR001		
MSD = MATRIX SPIKE DUPLICATE		MS	MSD	
RPD = RELATIVE PERCENT DIFFERENCE		%R	%R	%RPD
PEST COMPOUNDS	UNITS			
gamma-BHC (Lindane)	ug/Kg	113	114	1
Heptachlor	ug/Kg	114	113	6
Aldrin	ug/Kg	118	118	7
Dieldrin	ug/Kg	130	132	1
Endrin	ug/Kg	136	135	1
4,4'-DDT	ug/Kg	*138	*143	0

*** DENOTES VALUE NOT WITHIN QA/QC ADVISORY LIMITS**

CORRESPONDING SDG AND ASSOCIATED SAMPLES

OR001: 01S00100, 09S00100, 09S00100D, 09S00200, 09S00300, 09S00400, 01B00101, 01B00401, 08S00100, 08S00200, 08S00300, 08S00400, 08S00500, 08S00600, 08S00700, 08S00800, 01B00201, 01B00301, 09B00101, 10B00101, 10B00101D, 08B00101

MS = MATRIX SPIKE *SAMPLE 07D01201*		SDG OR002		
MSD = MATRIX SPIKE DUPLICATE		MS	MSD	
RPD = RELATIVE PERCENT DIFFERENCE		%R	%R	%RPD
PEST COMPOUNDS	UNITS			
gamma-BHC (Lindane)	ug/Kg	91	88	3
Heptachlor	ug/Kg	97	95	2
Aldrin	ug/Kg	100	98	2
Dieldrin	ug/Kg	103	98	5
Endrin	ug/Kg	112	106	6
4,4'-DDT	ug/Kg	112	108	4

*** DENOTES VALUE NOT WITHIN QA/QC ADVISORY LIMITS**

CORRESPONDING SDG AND ASSOCIATED SAMPLES

OR002: 08B00201, 08B00301, 08B00401, 07D00101, 07D00201, 07D00301, 01B00101, 07D00401, 07D00501, 07D00601, 07D01401, 07D01001, 07D01201, 07D01301, 07D01501, 02B00601, 07D01201D, 06D01201, 06D01301, 06D01401, 06D01201D

COMPOUND	ADVISORY LIMITS		RPD
	% R SOIL		SOIL
gamma-BHC(Lindane)	46%-127%		50
HEPTACHLOR	35%-130%		31
ALDRIN	34%-132%		43
DIELDRIN	31%-134%		38
ENDRIN	42%-139%		45
4,4'-DDT	23%-134%		50

TABLE 2 - 26, CONTINUED
PESTICIDES/PCBS
SOIL SAMPLE MATRIX SPIKE/MATRIX SPIKE DUPLICATES
NTC-ORLANDO, GROUP 1 SCREENING STUDY
AND BACKGROUND SAMPLING PROGRAM

MS = MATRIX SPIKE *SAMPLE 08B00801*		SDG OR008		
MSD = MATRIX SPIKE DUPLICATE		MS	MSD	
RPD = RELATIVE PERCENT DIFFERENCE		%R	%R	%RPD
PEST COMPOUNDS	UNITS			
gamma-BHC (Lindane)	ug/Kg	86	94	9
Heptachlor	ug/Kg	83	84	1
Aldrin	ug/Kg	89	96	8
Dieldrin	ug/Kg	100	107	7
Endrin	ug/Kg	107	115	7
4,4'-DDT	ug/Kg	98	107	9

*** DENOTES VALUE NOT WITHIN QA/QC ADVISORY LIMITS**

CORRESPONDING SDG AND ASSOCIATED SAMPLES

OR008: 08B00501, 08B00601, 05B00301, 08B00701, 08B00801, 08B00901, 08B00701D, 03S00101, 03S00201, 03B00101, 03B00201, 05B00101, 05B00201, 03S00301, 03S00401, 00B00301D, 03B00301, 03B00401, 04B00101, 04B00201, 04B00301

MS = MATRIX SPIKE *SAMPLE ORB00701*		SDG OR009		
MSD = MATRIX SPIKE DUPLICATE		MS	MSD	
RPD = RELATIVE PERCENT DIFFERENCE		%R	%R	%RPD
PEST COMPOUNDS	UNITS			
gamma-BHC (Lindane)	ug/Kg	78	89	13
Heptachlor	ug/Kg	80	89	11
Aldrin	ug/Kg	80	88	10
Dieldrin	ug/Kg	94	104	10
Endrin	ug/Kg	99	112	12
4,4'-DDT	ug/Kg	87	98	12

*** DENOTES VALUE NOT WITHIN QA/QC ADVISORY LIMITS**

CORRESPONDING SDG AND ASSOCIATED SAMPLES

OR009: ORB00101, ORS00101, ORB00301, ORS00301, ORB00201, ORS00201, ORB00401, ORS00401, ORB00501, ORS00501, ORS00601, ORB00601, ORB00701, ORS00701, ORB00801, ORS00801, ORB00901, ORS00901, ORB00601D

COMPOUND	ADVISORY LIMITS	RPD
	% R SOIL	SOIL
gamma-BHC(Lindane)	46%-127%	50
HEPTACHLOR	35%-130%	31
ALDRIN	34%-132%	43
DIELDRIN	31%-134%	38
ENDRIN	42%-139%	45
4,4'-DDT	23%-134%	50

TABLE 2 - 26, CONTINUED
PESTICIDES/PCBS
SOIL SAMPLE MATRIX SPIKE/MATRIX SPIKE DUPLICATES
NTC-ORLANDO, GROUP 1 SCREENING STUDY
AND BACKGROUND SAMPLING PROGRAM

MS = MATRIX SPIKE *SAMPLE ORB01201*		SDG OR010		
MSD = MATRIX SPIKE DUPLICATE		MS	MSD	
RPD = RELATIVE PERCENT DIFFERENCE		%R	%R	%RPD
PEST COMPOUNDS	UNITS			
gamma-BHC (Lindane)	ug/Kg	69	83	18
Heptachlor	ug/Kg	84	101	18
Aldrin	ug/Kg	78	95	20
Dieldrin	ug/Kg	97	120	21
Endrin	ug/Kg	89	107	18
4,4'-DDT	ug/Kg	37	*408	*167

*** DENOTES VALUE NOT WITHIN QA/QC ADVISORY LIMITS**

CORRESPONDING SDG AND ASSOCIATED SAMPLES

OR010: ORB01001, ORS01001, ORB01101, ORS01101, ORB01201, ORS01201, ORB01401, ORS01401, ORB01501, ORS01501, ORB01601, ORS01601, ORB01001D, ORB01401D, ORS01201D, ORB01301, ORS01301

COMPOUND	ADVISORY LIMITS		RPD
	% R SOIL		SOIL
gamma-BHC(Lindane)	46%-127%		50
HEPTACHLOR	35%-130%		31
ALDRIN	34%-132%		43
DIELDRIN	31%-134%		38
ENDRIN	42%-139%		45
4,4'-DDT	23%-134%		50

TABLE 2 - 27
CHLORINATED HERBICIDES
SOIL SAMPLE MATRIX SPIKE/MATRIX SPIKE DUPLICATES
NTC-ORLANDO, GROUP 1 SCREENING STUDY
AND BACKGROUND SAMPLING PROGRAM

MS = MATRIX SPIK *SAMPLE 09S00200*		SDG OR001		
MSD = MATRIX SPIKE DUPLICATE		MS	MSD	
RPD = RELATIVE PERCENT DIFFERENCE		%R	%R	%RPD
HERB COMPOUNDS	UNITS			
DALAPON	ug/Kg	77	67	13
DICAMBA	ug/Kg	99	100	0
MCPP	ug/Kg	125	132	5
MCPA	ug/Kg	80	74	8
2,4-DP	ug/Kg	100	100	0
2,4-D	ug/Kg	119	102	16
SILVEX	ug/Kg	110	91	19
2,4,5-T	ug/Kg	110	112	2
2,4-DC	ug/Kg	146	126	15
DINOSEB	ug/Kg	189	129	38

*** DENOTES VALUE NOT WITHIN QA/QC ADVISORY LIMITS**

CORRESPONDING SDG AND ASSOCIATED SAMPLES

OR001: 01S00100, 09S00100, 09S00100D, 09S00200, 09S00300, 09S00400
08S00100, 08S00200, 08S00300, 08S00400,
08S00500, 08S00600, 08S00700, 08S00800,
09B00101, 10B00101, 10B00101D, 08B00101

COMPOUND	ADVISORY LIMITS		RPD
	% R SOIL		SOIL
DALAPON	NR		NR
DICAMBA	NR		NR
MCPP	NR		NR
MCPA	NR		NR
2,4-DP	NR		NR
2,4-D	NR		NR
SILVEX	NR		NR
2,4,5-T	NR		NR
2,4-DC	NR		NR
DINOSEB	NR		NR

NR INDICATES THAT THE LABORATORY DID NOT PROVIDE QC LIMITS.

TABLE 2 - 27, CONTINUED
CHLORINATED HERBICIDES
SOIL SAMPLE MATRIX SPIKE/MATRIX SPIKE DUPLICATES
NTC-ORLANDO, GROUP 1 SCREENING STUDY
AND BACKGROUND SAMPLING PROGRAM

MS = MATRIX SPIK *SAMPLE 07D01201*		SDG OR002		
MSD = MATRIX SPIKE DUPLICATE		MS	MSD	
RPD = RELATIVE PERCENT DIFFERENCE		%R	%R	%RPD
HERB COMPOUNDS	UNITS			
DALAPON	ug/Kg	75	88	16
DICAMBA	ug/Kg	98	107	9
MCPP	ug/Kg	88	87	1
MCPA	ug/Kg	127	119	7
2,4-DP	ug/Kg	106	113	7
2,4-D	ug/Kg	132	133	1
SILVEX	ug/Kg	92	104	12
2,4,5-T	ug/Kg	92	84	9
2,4-DC	ug/Kg	131	133	1
DINOSEB	ug/Kg	147	160	9

*** DENOTES VALUE NOT WITHIN QA/QC ADVISORY LIMITS**

CORRESPONDING SDG AND ASSOCIATED SAMPLES

OR002: 08B00201, 08B00301, 08B00401, 07D00101, 07D00201, 07D00301, 01B00101, 07D00401, 07D00501, 07D00601, 07D01401, 07D01001, 07D01201, 07D01301, 07D01501, 02B00601, 07D01201D, 06D01201, 06D01301, 06D01401, 06D01201D

COMPOUND	ADVISORY LIMITS		RPD
	% R SOIL		SOIL
DALAPON	NR		NR
DICAMBA	NR		NR
MCPP	NR		NR
MCPA	NR		NR
2,4-DP	NR		NR
2,4-D	NR		NR
SILVEX	NR		NR
2,4,5-T	NR		NR
2,4-DC	NR		NR
DINOSEB	NR		NR

NR INDICATES THAT THE LABORATORY DID NOT PROVIDE QC LIMITS.

TABLE 2 - 27, CONTINUED
CHLORINATED HERBICIDES
SOIL SAMPLE MATRIX SPIKE/MATRIX SPIKE DUPLICATES
NTC-ORLANDO, GROUP 1 SCREENING STUDY
AND BACKGROUND SAMPLING PROGRAM

MS = MATRIX SPIK *SAMPLE 08B00801*		SDG OR008		
MSD = MATRIX SPIKE DUPLICATE		MS	MSD	
RPD = RELATIVE PERCENT DIFFERENCE		%R	%R	%RPD
HERB COMPOUNDS	UNITS			
DALAPON	ug/Kg	64	76	17
DICAMBA	ug/Kg	96	104	9
MCPP	ug/Kg	92	102	10
MCPA	ug/Kg	87	93	7
2,4-DP	ug/Kg	113	121	6
2,4-D	ug/Kg	100	109	9
SILVEX	ug/Kg	94	102	9
2,4,5-T	ug/Kg	98	105	7
2,4-DC	ug/Kg	101	110	9
DINOSEB	ug/Kg	109	124	13

*** DENOTES VALUE NOT WITHIN QA/QC ADVISORY LIMITS**

CORRESPONDING SDG AND ASSOCIATED SAMPLES

OR008: 08B00501, 08B00601, 08B00701, 08B00801, 08B00901, 08B00701D

COMPOUND	ADVISORY LIMITS		RPD
	% R SOIL		SOIL
DALAPON	NR		NR
DICAMBA	NR		NR
MCPP	NR		NR
MCPA	NR		NR
2,4-DP	NR		NR
2,4-D	NR		NR
SILVEX	NR		NR
2,4,5-T	NR		NR
2,4-DC	NR		NR
DINOSEB	NR		NR

NR INDICATES THAT THE LABORATORY DID NOT PROVIDE QC LIMITS.

TABLE 2 - 27, CONTINUED
CHLORINATED HERBICIDES
SOIL SAMPLE MATRIX SPIKE/MATRIX SPIKE DUPLICATES
NTC-ORLANDO, GROUP 1 SCREENING STUDY
AND BACKGROUND SAMPLING PROGRAM

MS = MATRIX SPIK *SAMPLE ORB00701*		SDG OR009		
MSD = MATRIX SPIKE DUPLICATE		MS	MSD	
RPD = RELATIVE PERCENT DIFFERENCE		%R	%R	%RPD
HERB COMPOUNDS	UNITS			
DALAPON	ug/Kg	89	57	44
DICAMBA	ug/Kg	94	97	4
MCPP	ug/Kg	125	120	4
MCPA	ug/Kg	166	160	3
2,4-DP	ug/Kg	96	103	7
2,4-D	ug/Kg	132	123	7
SILVEX	ug/Kg	97	103	6
2,4,5-T	ug/Kg	99	107	8
2,4-DC	ug/Kg	149	143	4
DINOSEB	ug/Kg	95	*22	*125

*** DENOTES VALUE NOT WITHIN QA/QC ADVISORY LIMITS**

CORRESPONDING SDG AND ASSOCIATED SAMPLES

OR009: ORB00101, ORS00101, ORB00301, ORS00301, ORB00201, ORS00201, ORB00401, ORS00401, ORB00501, ORS00501, ORS00601, ORB00601, ORB00701, ORS00701, ORB00801, ORS00801, ORB00901, ORS00901, ORB00601D

COMPOUND	ADVISORY LIMITS		RPD
	% R SOIL		SOIL
DALAPON	NR		NR
DICAMBA	NR		NR
MCPP	NR		NR
MCPA	NR		NR
2,4-DP	NR		NR
2,4-D	NR		NR
SILVEX	NR		NR
2,4,5-T	NR		NR
2,4-DC	NR		NR
DINOSEB	NR		NR

NR INDICATES THAT THE LABORATORY DID NOT PROVIDE QC LIMITS.

TABLE 2 - 27, CONTINUED
CHLORINATED HERBICIDES
SOIL SAMPLE MATRIX SPIKE/MATRIX SPIKE DUPLICATES
NTC-ORLANDO, GROUP 1 SCREENING STUDY
AND BACKGROUND SAMPLING PROGRAM

MS = MATRIX SPIK *SAMPLE ORB01201*		SDG OR010		
MSD = MATRIX SPIKE DUPLICATE		MS	MSD	
RPD = RELATIVE PERCENT DIFFERENCE		%R	%R	%RPD
HERB COMPOUNDS	UNITS			
DALAPON	ug/Kg	65	42	44
DICAMBA	ug/Kg	90	65	31
MCPP	ug/Kg	92	67	33
MCPA	ug/Kg	80	62	25
2,4-DP	ug/Kg	98	69	35
2,4-D	ug/Kg	103	75	31
SILVEX	ug/Kg	95	68	34
2,4,5-T	ug/Kg	98	68	37
2,4-DC	ug/Kg	89	73	21
DINOSEB	ug/Kg	98	88	12

*** DENOTES VALUE NOT WITHIN QA/QC ADVISORY LIMITS**

CORRESPONDING SDG AND ASSOCIATED SAMPLES

OR010: ORB01001, ORS01001, ORB01101, ORS01101, ORB01201, ORS01201, ORB01401, ORS01401, ORB01501, ORS01501, ORB01601, ORS01601, ORB01001D, ORB01401D, ORS01201D, ORB01301, ORS01301

COMPOUND	ADVISORY LIMITS	RPD
	% R SOIL	SOIL
DALAPON	NR	NR
DICAMBA	NR	NR
MCPP	NR	NR
MCPA	NR	NR
2,4-DP	NR	NR
2,4-D	NR	NR
SILVEX	NR	NR
2,4,5-T	NR	NR
2,4-DC	NR	NR
DINOSEB	NR	NR

NR INDICATES THAT THE LABORATORY DID NOT PROVIDE QC LIMITS.

TABLE 2 - 28
TOTAL METALS
SOIL SAMPLE MATRIX SPIKE/ DUPLICATES
NTC-ORLANDO, GROUP 1 SCREENING STUDY
AND BACKGROUND SAMPLING PROGRAM

MS = MATRIX SPIKE *SAMPLE 09S00200*		SDG OR001	
MD = MATRIX DUPLICATE *SAMPLE 09S00200*		MS	MD
RPD = RELATIVE PERCENT DIFFERENCE		%R	RPD
METALS COMPOUNDS	UNITS		
ALUMINUM	mg/Kg	NR	12.4
ANTIMONY	mg/Kg	89.8	NC
ARSENIC	mg/Kg	110	NC
BARIUM	mg/Kg	89.1	15.6
BERYLLIUM	mg/Kg	92.9	NC
CADMIUM	mg/Kg	89.9	NC
CALCIUM	mg/Kg	NR	0.1
CHROMIUM	mg/Kg	92.0	57.5
COBALT	mg/Kg	88.6	NC
COPPER	mg/Kg	91.0	7.6
IRON	mg/Kg	NR	*33.2
LEAD	mg/Kg	106	12.5
MAGNESIUM	mg/Kg	NR	2.3
MANGANESE	mg/Kg	89.2	7.4
MERCURY	mg/Kg	104	*200
NICKEL	mg/Kg	88.2	NC
POTASSIUM	mg/Kg	NR	200
SELENIUM	mg/Kg	108	NC
SILVER	mg/Kg	89.0	200
SODIUM	mg/Kg	NR	NC
THALLIUM	mg/Kg	101	NC
VANADIUM	mg/Kg	84.7	NC
ZINC	mg/Kg	90.8	28.9

*** DENOTES VALUE NOT WITHIN QA/QC ADVISORY LIMITS**

NC DENOTES THAT BOTH SAMPLES ARE NON-DETECT AND A RPD CANNOT BE CALCULATED.
NR DENOTES THAT A MATRIX SPIKE RECOVERY CALCULATION IS NOT REQUIRED.

CORRESPONDING SDG'S AND ASSOCIATED SAMPLES

OR001: 01S00100, 09S00100, 09S00100D, 09S00200, 09S00300, 09S00400,
08S00100, 08S00200, 08S00300, 08S00400,
08S00500, 08S00600, 08S00700, 08S00800,
09B00101, 10B00101, 10B00101D, 08B00101

COMPOUND	ADVISORY LIMITS		RPD
	%R SOIL		SOIL
ALL COMPOUNDS	75%-125%		+/-20 OR +/-CR

+/- CRDL = RPD Limits applicable only on values 5 times the Contract Required Detection Limit (CRDL)

TABLE 2 - 28, CONTINUED
TOTAL METALS
SOIL SAMPLE MATRIX SPIKE/ DUPLICATES
NTC-ORLANDO, GROUP 1 SCREENING STUDY
AND BACKGROUND SAMPLING PROGRAM

MS = MATRIX SPIKE *SAMPLE 07D01201*		SDG OR002	
MD = MATRIX DUPLICATE *SAMPLE 07D01201*		MS	MD
RPD = RELATIVE PERCENT DIFFERENCE		%R	RPD
METALS COMPOUNDS	UNITS		
ALUMINUM	mg/Kg	NR	6.2
ANTIMONY	mg/Kg	87.1	NC
ARSENIC	mg/Kg	88.3	32.9
BARIUM	mg/Kg	97.5	2.3
BERYLLIUM	mg/Kg	99.4	0.0
CADMIUM	mg/Kg	102	200
CALCIUM	mg/Kg	NR	3.7
CHROMIUM	mg/Kg	96.3	2.3
COBALT	mg/Kg	91.7	NC
COPPER	mg/Kg	93.0	4.3
IRON	mg/Kg	NR	*22.5
LEAD	mg/Kg	*145	*25.3
MAGNESIUM	mg/Kg	NR	15.7
MANGANESE	mg/Kg	94.6	6.4
MERCURY	mg/Kg	94.1	30.9
NICKEL	mg/Kg	97.7	52.5
POTASSIUM	mg/Kg	NR	NC
SELENIUM	mg/Kg	105	200
SILVER	mg/Kg	87.5	NC
SODIUM	mg/Kg	NR	50.0
THALLIUM	mg/Kg	86.5	NC
VANADIUM	mg/Kg	90.2	5.0
ZINC	mg/Kg	95.3	16.6

*** DENOTES VALUE NOT WITHIN QA/QC ADVISORY LIMITS**

NC DENOTES THAT BOTH SAMPLES ARE NON-DETECT AND A RPD CANNOT BE CALCULATED.
NR DENOTES THAT A MATRIX SPIKE RECOVERY CALCULATION IS NOT REQUIRED.

CORRESPONDING SDG'S AND ASSOCIATED SAMPLES

OR002: 08B00201, 08B00301, 08B00401, 07D00101, 07D00201, 07D00301, 01B00101, 07D00401, 07D00501, 07D00601, 07D01401, 07D01001, 07D01201, 07D01301, 07D01501, 02B00601, 07D01201D, 06D01201, 06D01301, 06D01401, 06D01201D

COMPOUND	ADVISORY LIMITS		RPD
	%R SOIL		SOIL
ALL COMPOUNDS	75%-125%		+/-20 OR +/-CR

+/- CRDL = RPD Limits applicable only on values 5 times the Contract Required Detection Limit (CRDL)

TABLE 2 - 28, CONTINUED
TOTAL METALS
SOIL SAMPLE MATRIX SPIKE/ DUPLICATES
NTC-ORLANDO, GROUP 1 SCREENING STUDY
AND BACKGROUND SAMPLING PROGRAM

MS = MATRIX SPIKE *SAMPLE 08B00801*		SDG OR008	
MD = MATRIX DUPLICATE *SAMPLE 08B00801*		MS	MD
RPD = RELATIVE PERCENT DIFFERENCE		%R	RPD
METALS COMPOUNDS	UNITS		
ALUMINUM	mg/Kg	NR	73.8
ANTIMONY	mg/Kg	85.8	NC
ARSENIC	mg/Kg	94	NC
BARIUM	mg/Kg	*170	41.6
BERYLLIUM	mg/Kg	85.2	NC
CADMIUM	mg/Kg	85.2	NC
CALCIUM	mg/Kg	NR	6.2
CHROMIUM	mg/Kg	86.9	18.3
COBALT	mg/Kg	83.5	NC
COPPER	mg/Kg	84.7	200
IRON	mg/Kg	NR	5.2
LEAD	mg/Kg	88.6	200
MAGNESIUM	mg/Kg	NR	NC
MANGANESE	mg/Kg	84.5	9.5
MERCURY	mg/Kg	96.6	5.7
NICKEL	mg/Kg	87.6	NC
POTASSIUM	mg/Kg	NR	NC
SELENIUM	mg/Kg	110	NC
SILVER	mg/Kg	82.5	NC
SODIUM	mg/Kg	NR	20.8
THALLIUM	mg/Kg	97.3	NC
VANADIUM	mg/Kg	79.4	NC
ZINC	mg/Kg	85.8	200

*** DENOTES VALUE NOT WITHIN QA/QC ADVISORY LIMITS**

NC DENOTES THAT BOTH SAMPLES ARE NON-DETECT AND A RPD CANNOT BE CALCULATED.
NR DENOTES THAT A MATRIX SPIKE RECOVERY CALCULATION IS NOT REQUIRED.

CORRESPONDING SDG'S AND ASSOCIATED SAMPLES

OR008: 08B00501, 08B00601, 05B00301, 08B00701, 08B00801, 08B00901, 08B00701D, 03S00101, 03S00201, 03B00101, 03B00201, 05B00101, 05B00201, 03S00301, 03S00401, 00B00301D, 03B00301, 03B00401, 04B00101, 04B00201, 04B00301

COMPOUND	ADVISORY LIMITS		RPD
	%R SOIL		SOIL
ALL COMPOUNDS	75%-125%		+/-20 OR +/-CR

+/- CRDL = RPD Limits applicable only on values 5 times the Contract Required Detection Limit (CRDL)

TABLE 2 - 28, CONTINUED
TOTAL METALS
SOIL SAMPLE MATRIX SPIKE/ DUPLICATES
NTC-ORLANDO, GROUP 1 SCREENING STUDY
AND BACKGROUND SAMPLING PROGRAM

MS = MATRIX SPIKE *SAMPLE ORB00701*		SDG OR009	
MD = MATRIX DUPLICATE *SAMPLE ORB00701*		MS	MD
RPD = RELATIVE PERCENT DIFFERENCE		%R	RPD
METALS COMPOUNDS	UNITS		
ALUMINUM	mg/Kg	NR	7.8
ANTIMONY	mg/Kg	86.5	NC
ARSENIC	mg/Kg	107	13.5
BARIUM	mg/Kg	83.1	3.4
BERYLLIUM	mg/Kg	85.5	NC
CADMIUM	mg/Kg	91.9	NC
CALCIUM	mg/Kg	NR	6.5
CHROMIUM	mg/Kg	87.6	8.3
COBALT	mg/Kg	85.1	NC
COPPER	mg/Kg	83.3	NC
IRON	mg/Kg	NR	*71.5
LEAD	mg/Kg	105	*72.8
MAGNESIUM	mg/Kg	NR	30.2
MANGANESE	mg/Kg	85.0	0.6
MERCURY	mg/Kg	92.5	200
NICKEL	mg/Kg	88.8	NC
POTASSIUM	mg/Kg	NR	NC
SELENIUM	mg/Kg	86.1	200
SILVER	mg/Kg	77.1	200
SODIUM	mg/Kg	NR	NC
THALLIUM	mg/Kg	91.0	NC
VANADIUM	mg/Kg	78.3	64.0
ZINC	mg/Kg	86.6	NC

*** DENOTES VALUE NOT WITHIN QA/QC ADVISORY LIMITS**

NC DENOTES THAT BOTH SAMPLES ARE NON-DETECT AND A RPD CANNOT BE CALCULATED.
NR DENOTES THAT A MATRIX SPIKE RECOVERY CALCULATION IS NOT REQUIRED.

CORRESPONDING SDG'S AND ASSOCIATED SAMPLES

OR009: ORB00101, ORS00101, ORB00301, ORS00301, ORB00201, ORS00201, ORB00401, ORS00401, ORB00501, ORS00501, ORS00601, ORB00601, ORB00701, ORS00701, ORB00801, ORS00801, ORB00901, ORS00901, ORB00601D

COMPOUND	ADVISORY LIMITS		RPD
	%R SOIL		SOIL
ALL COMPOUNDS	75%-125%		+/-20 OR +/-CR

+/- CRDL = RPD Limits applicable only on values 5 times the Contract Required Detection Limit (CRDL)

TABLE 2 - 28, CONTINUED
TOTAL METALS
SOIL SAMPLE MATRIX SPIKE/ DUPLICATES
NTC-ORLANDO, GROUP 1 SCREENING STUDY
AND BACKGROUND SAMPLING PROGRAM

MS = MATRIX SPIKE *SAMPLE ORB01201*		SDG OR010	
MD = MATRIX DUPLICATE *SAMPLE ORB01201*		MS	MD
RPD = RELATIVE PERCENT DIFFERENCE		%R	RPD
METALS COMPOUNDS	UNITS		
ALUMINUM	mg/Kg	NR	19.6
ANTIMONY	mg/Kg	93.7	NC
ARSENIC	mg/Kg	105	200
BARIUM	mg/Kg	94.1	18.1
BERYLLIUM	mg/Kg	92.8	NC
CADMIUM	mg/Kg	96.3	200
CALCIUM	mg/Kg	NR	2.3
CHROMIUM	mg/Kg	96.6	35.2
COBALT	mg/Kg	92.3	NC
COPPER	mg/Kg	92.4	54.0
IRON	mg/Kg	NR	12.3
LEAD	mg/Kg	108	NC
MAGNESIUM	mg/Kg	NR	65.9
MANGANESE	mg/Kg	93.3	0.0
MERCURY	mg/Kg	112	13.4
NICKEL	mg/Kg	94.5	NC
POTASSIUM	mg/Kg	NR	200
SELENIUM	mg/Kg	87.9	NC
SILVER	mg/Kg	94.8	200
SODIUM	mg/Kg	NR	NC
THALLIUM	mg/Kg	96.7	NC
VANADIUM	mg/Kg	87.3	NC
ZINC	mg/Kg	95.0	63.7

*** DENOTES VALUE NOT WITHIN QA/QC ADVISORY LIMITS**

NC DENOTES THAT BOTH SAMPLES ARE NON-DETECT AND A RPD CANNOT BE CALCULATED.
NR DENOTES THAT A MATRIX SPIKE RECOVERY CALCULATION IS NOT REQUIRED.

CORRESPONDING SDG'S AND ASSOCIATED SAMPLES

OR010: ORB01001, ORS01001, ORB01101, ORS01101, ORB01201, ORS01201, ORB01401, ORS01401, ORB01501, ORS01501, ORB01601, ORS01601, ORB01001D, ORB01401D, ORS01201D, ORB01301, ORS01301

COMPOUND	ADVISORY LIMITS		RPD
	%R SOIL		SOIL
ALL COMPOUNDS	75%-125%		+/-20 OR +/-CR

+/- CRDL = RPD Limits applicable only on values 5 times the Contract Required Detection Limit (CRDL)

TABLE 2 - 29
CYANIDE
SOIL SAMPLE MATRIX SPIKE/ DUPLICATES
NTC-ORLANDO, GROUP 1 SCREENING STUDY
AND BACKGROUND SAMPLING PROGRAM

MS = MATRIX SPIKE *SAMPLE 07D01201*		SDG OR002	
MD = MATRIX DUPLICATE *SAMPLE 07D01201*		MS	MD
RPD = RELATIVE PERCENT DIFFERENCE		%R	RPD
METALS COMPOUNDS	UNITS		
CYANIDE	mg/Kg	90.2	NC

*** DENOTES VALUE NOT WITHIN QA/QC ADVISORY LIMITS**

NC DENOTES THAT BOTH SAMPLES ARE NON-DETECT AND A RPD CANNOT BE CALCULATED.
NR DENOTES THAT A MATRIX SPIKE RECOVERY CALCULATION IS NOT REQUIRED.

CORRESPONDING SDG'S AND ASSOCIATED SAMPLES

OR002: 08B00201, 08B00301, 08B00401, 07D00101, 07D00201, 07D00301, 01B00101, 07D00401, 07D00501, 07D00601, 07D01401, 07D01001, 07D01201, 07D01301, 07D01501, 02B00601, 07D01201D, 06D01201, 06D01301, 06D01401, 06D01201D

COMPOUND	ADVISORY LIMITS		RPD
	%R SOIL		SOIL
ALL COMPOUNDS	75%-125%		+/-20 OR +/-CR

+/- CRDL = RPD Limits applicable only on values 5 times the Contract Required Detection Limit (CRDL)

TABLE 2 - 30
TOTAL PETROLEUM HYDROCARBONS
SOIL SAMPLE MATRIX SPIKE/ DUPLICATES
NTC-ORLANDO, GROUP 1 SCREENING STUDY
AND BACKGROUND SAMPLING PROGRAM

MS = MATRIX SPIKE *SAMPLE 07D00101*		SDG OR002	
MD = MATRIX DUPLICATE *SAMPLE 07D01201*		MS	MD
RPD = RELATIVE PERCENT DIFFERENCE		%R	RPD
TPH	UNITS		
TOTAL PETROLEUM HYDROCARBONS	mg/Kg	98.3	6.5

*** DENOTES VALUE NOT WITHIN QA/QC ADVISORY LIMITS**

NC DENOTES THAT BOTH SAMPLES ARE NON-DETECT AND A RPD CANNOT BE CALCULATED.
NR DENOTES THAT A MATRIX SPIKE RECOVERY CALCULATION IS NOT REQUIRED.

CORRESPONDING SDG'S AND ASSOCIATED SAMPLES

OR002: 07D00101, 07D00201, 07D00301, 07D1001, 07D1201, 07D1301, 07D01501, 07D01201D, 06D01201, 06D01301, 06D01401, 06D01201D

MS = MATRIX SPIKE *SAMPLE 07D01201*		SDG OR002	
MD = MATRIX DUPLICATE *SAMPLE 07D01201*		MS	MD
RPD = RELATIVE PERCENT DIFFERENCE		%R	RPD
TPH	UNITS		
TOTAL PETROLEUM HYDROCARBONS	mg/Kg	94.0	13.8

*** DENOTES VALUE NOT WITHIN QA/QC ADVISORY LIMITS**

NC DENOTES THAT BOTH SAMPLES ARE NON-DETECT AND A RPD CANNOT BE CALCULATED.
NR DENOTES THAT A MATRIX SPIKE RECOVERY CALCULATION IS NOT REQUIRED.

CORRESPONDING SDG'S AND ASSOCIATED SAMPLES

OR002: 07D00101, 07D00201, 07D00301, 07D1001, 07D1201, 07D1301, 07D01501, 07D01201D, 06D01201, 06D01301, 06D01401, 06D01201D

COMPOUND	ADVISORY LIMITS		RPD
	%R SOIL		SOIL
ALL COMPOUNDS	75%-125%		+/-20

TABLE 2 - 30, CONTINUED
TOTAL PETROLEUM HYDROCARBONS
SOIL SAMPLE MATRIX SPIKE/ DUPLICATES
NTC-ORLANDO, GROUP 1 SCREENING STUDY
AND BACKGROUND SAMPLING PROGRAM

MS = MATRIX SPIKE *SAMPLE 04B00101*		SDG OR008	
MD = MATRIX DUPLICATE *SAMPLE 07D01201*		MS	MD
RPD = RELATIVE PERCENT DIFFERENCE		%R	RPD
TPH	UNITS		
TOTAL PETROLEUM HYDROCARBONS	mg/Kg	95.8	0.0

*** DENOTES VALUE NOT WITHIN QA/QC ADVISORY LIMITS**

NC DENOTES THAT BOTH SAMPLES ARE NON-DETECT AND A RPD CANNOT BE CALCULATED.
NR DENOTES THAT A MATRIX SPIKE RECOVERY CALCULATION IS NOT REQUIRED.

CORRESPONDING SDG'S AND ASSOCIATED SAMPLES

OR008, 04B00101, 04B00101D, 04B00201, 04B00301

COMPOUND	ADVISORY LIMITS		RPD
	%R SOIL		SOIL
ALL COMPOUNDS	75%-125%		+/-20

TABLE 2 - 31
TOTAL ORGANIC CARBON
SOIL SAMPLE MATRIX SPIKE/ DUPLICATES
NTC-ORLANDO, GROUP 1 SCREENING STUDY
AND BACKGROUND SAMPLING PROGRAM

MS = MATRIX SPIKE *SAMPLE 07D00101*		SDG OR002	
MD = MATRIX DUPLICATE *SAMPLE 07D00101*		MS	MD
RPD = RELATIVE PERCENT DIFFERENCE		%R	RPD
TOC	UNITS		
TOTAL ORGANIC CARBON	mg/Kg	88.2	15.8

* DENOTES VALUE NOT WITHIN QA/QC ADVISORY LIMITS

MS = MATRIX SPIKE *SAMPLE 07D000401*		SDG OR002	
MD = MATRIX DUPLICATE *SAMPLE 07D000401*		MS	MD
RPD = RELATIVE PERCENT DIFFERENCE		%R	RPD
TOC	UNITS		
TOTAL ORGANIC CARBON	mg/Kg	105.2	1.8

* DENOTES VALUE NOT WITHIN QA/QC ADVISORY LIMITS

MS = MATRIX SPIKE *SAMPLE 07D001201*		SDG OR002	
MD = MATRIX DUPLICATE *SAMPLE 07D001201*		MS	MD
RPD = RELATIVE PERCENT DIFFERENCE		%R	RPD
TOC	UNITS		
TOTAL ORGANIC CARBON	mg/Kg	99.3	6.3

* DENOTES VALUE NOT WITHIN QA/QC ADVISORY LIMITS

MS = MATRIX SPIKE *SAMPLE 06D01201*		SDG OR002	
MD = MATRIX DUPLICATE *SAMPLE NA*		MS	MD
RPD = RELATIVE PERCENT DIFFERENCE		%R	RPD
TOC	UNITS		
TOTAL ORGANIC CARBON	mg/Kg	107.0	NR

* DENOTES VALUE NOT WITHIN QA/QC ADVISORY LIMITS

NC DENOTES THAT BOTH SAMPLES ARE NON-DETECT AND A RPD CANNOT BE CALCULATED.
NR DENOTES THAT A MATRIX SPIKE RECOVERY CALCULATION IS NOT REQUIRED.

CORRESPONDING SDG'S AND ASSOCIATED SAMPLES

OR002: 07D00101, 07D00201, 07D00301, 07D1001, 07D1201, 07D1301, 07D01501, 07D01201D, 06D01201, 06D01301, 06D01401, 06D01201D, 07D00401, 07D00501, 07D00601, 07D01401

COMPOUND	ADVISORY LIMITS		RPD
	%R SOIL		SOIL
ALL COMPOUNDS	75%-125%		+/-20

2.1 Water Matrix

No target compounds requiring RPD calculation were detected in either the water samples or associated duplicates for the low concentration semivolatiles (Table 2-2), polynuclear aromatic hydrocarbons (Table 2-4), pesticides/PCBs (Table 2-5), chlorinated herbicides (Table 2-6) or endothall (Table 2-7) . Therefore, no precision assessment was conducted for those parameters.

The volatile analysis of the field duplicate pairs of samples ORG00701 and ORG00201 exhibited acceptable RPDs for the only target compound detected, chloroform (Table 2-1).

The low concentration volatile analysis of the field duplicate pair of sample 05G00301 exhibited a non-compliant RPD for the compound carbon disulfide (Table 2-1). The compound was detected in both original sample and the field duplicate sample at concentrations below the CRQL. The non-compliance for carbon disulfide can be attributed to the low concentrations detected in the sample. Assessment of the calibration data indicates that criteria was met for the non-compliant compound (Appendix A, Table A-1).

The semivolatile analysis of the field duplicate pair of sample 08G00401 exhibited a non-compliant RPD for the only target compound detected (Table 2-3). The compound, naphthalene, was detected at concentrations below the CRQL in both the original sample and the field duplicate sample. The non-compliance for the compound naphthalene can be attributed to the low concentrations detected. Assessment of the calibration data indicates that criteria was met for the non-compliant compound (Appendix A, Table A-3).

The field duplicate pairs of samples 08G00401 and 05G00301 analyzed for metals exhibited acceptable precision results for all analytes requiring RPD calculation (Table 2-8).

Two (2) of the nine (9) target analytes detected in the metals analysis of the field duplicate pair of sample ORG00701 exhibited non-compliant RPDs (Table 2-8). The target analytes with non-compliant RPDs were mercury and vanadium. The analytes were detected at concentrations below the CRDL in both the original sample and the field duplicate sample. The non-compliance for mercury and vanadium can be attributed to the low concentrations detected. Assessment of the serial dilution data indicates that criteria was met for the non-compliant compounds (Appendix B, Table B-1).

One (1) of the nine (9) target analytes detected in the metals analysis of the field duplicate pair of sample ORG00201 exhibited a non-compliant RPD (Table 2-8). The target analyte with a non-compliant RPD was selenium. The analyte was detected at a concentration above the CRDL in the original sample and below the CRQL in the field duplicate sample. The non-compliance for selenium can be attributed to the low concentrations detected. Assessment of the serial dilution data indicates that criteria was met for the non-compliant compounds (Appendix B, Table B-1).

The evaluation of precision of the water matrix for the MS/MSD samples is provided in Tables 2-17 through 2-23. All MS/MSD sample pairs analyzed for low concentration volatiles, semivolatiles, polynuclear aromatic hydrocarbons, herbicides, and metals exhibited acceptable RPDs between spike compounds (Tables 2-17, 2-19, 2-20, 2-22, and 2-23).

The low concentration semivolatile analysis of the MS/MSD pair of sample 05G00201 exhibited a non-compliant RPD for the compound bis(2-ethylhexyl)phthalate (Table 2-18). However, based on the assessment of additional QC criteria, the analytical data did not require qualification.

The pesticides/PCBs analysis of the MS/MSD pair of sample 05G00201 exhibited a non-compliant RPD for the compound lindane (Table 2-21). However, based on the assessment of additional QC criteria, the analytical data did not require qualification.

Based on assessment of duplicate precision evaluation criteria, the water matrix analytical data was acceptable for each SDG.

2.2 Soil Matrix

No target compounds requiring RPD calculation were detected in either the water samples or associated duplicates for the chlorinated herbicides (Table 2-12) or the cyanide fraction (Table 2-14) . Therefore, no precision assessment was conducted for that parameter.

The volatile analysis of the field duplicate pairs of samples 09S00100, 06D01201, 07D01201, ORB00601, ORB01401, and ORB01001 did not exhibit positive results for target compounds (Table 2-9). The volatile analysis of the field duplicate pairs of samples 08B00701 and 03B00301 exhibited acceptable RPDs for the detected compounds (Table 2-9).

The volatile analysis of the field duplicate pair of sample 10B00101 exhibited a non-compliant RPD for the only compound detected (Table 2-9). The non-compliant compound, acetone, is a common laboratory contaminant which was detected in some of the method blanks associated with this project. The compound was detected above the CRQL in the original sample, and was not detected in the field duplicate sample. The non-compliance for the compound acetone can be attributed to the low concentrations detected. Assessment of the calibration data indicates that %D criteria was not met for the non-compliant compound (Appendix A, Table A-1). The calibration non-compliance could also impact the precision results.

The semivolatile analysis of the field duplicate pairs of samples 03B00301, ORB01401, and ORB01201 did not exhibit positive results for target compounds (Table 2-10). The semivolatile analysis of the field duplicate pairs of samples 10B00101, 06D01201, and 08B00701 exhibited acceptable precision for the detected target compounds (Table 2-10).

The semivolatile analysis of the field duplicate pair of sample 08G00401 exhibited non-compliant RPDs for one (1) of the sixteen (16) target compounds requiring RPD calculation (Table 2-10). The non-compliant compound was benzo(k)fluoranthene. The compound was detected at concentrations below the CRQL in the original sample and slightly above the CRQL in the field duplicate sample. The non-compliance for the compound benzo(k)fluoranthene can be attributed to the low concentrations detected. The positive result for benzo(k)fluoranthene in both the original sample and the field duplicate sample were qualified as estimated, J. Assessment of the calibration data indicates that criteria was met for the non-compliant compound (Appendix A, Table A-3).

The semivolatile analysis of the field duplicate pair of sample 07D01201 exhibited non-compliant RPDs for the three (3) target compounds detected (Table 2-10). The non-compliant compounds were di-n-butylphthalate, bis(2-ethylhexyl)phthalate, and di-n-octylphthalate. The original sample was analyzed undiluted. The field duplicate sample was analyzed at a 1:5 dilution. The three (3) compounds are common laboratory contaminants. The compounds were not detected in method blanks associated with these samples. However, their presence in the laboratory as contaminant could affect precision results through random contamination. Further, dilution of sample extracts introduces the potential for error which could impact precision results. The non-compliance for the compounds may be attributed to laboratory inconsistencies. Assessment of the calibration data indicates that criteria was met for the non-compliant compound (Appendix A, Table A-3).

The pesticide/PCB analysis of the field duplicate pairs of samples 10B00101, 08B00701, 03B00301, ORB00601, ORB01001, and ORB01401 did not exhibit positive results for target compounds (Table 2-11). The pesticide/PCB analysis of the field duplicate pairs of samples 07D01201, 06D01201, and ORS01201 exhibited acceptable precision for the detected target compounds (Table 2-11).

The pesticide/PCB analysis of the field duplicate pair of sample 09S00100 exhibited a non-compliant RPD for one (1) of the three (3) compounds detected (Table 2-11). The non-compliant compound, 4,4'-DDT, was detected at concentrations below the compound CRQL. The non-compliant for 4,4'-DDT can be attributed to the low concentrations detected. The CRQL required adjustment due to the high dilution required for other detected target compounds. All associated calibration data was in-control.

The field duplicate pairs of samples 03B00301 and ORB01001analyzed for metals exhibited acceptable precision results for all analytes requiring RPD calculation (Table 2-13).

Four (4) of the eleven (11) target analytes detected in the metals analysis of the field duplicate pair of sample 10B00101 exhibited non-compliant RPDs (Table 2-13). The target analytes with non-compliant RPDs were calcium, iron, magnesium, and manganese. The analytes magnesium and manganese were detected at concentrations below the CRDL in both the original sample and the field duplicate sample. The analyte calcium was detected above the CRDL in the original sample and below the CRDL in the field duplicate sample. The non-compliance for magnesium, manganese, and calcium can be attributed to the low concentrations detected. The analyte iron was non-compliant in the serial dilution analysis also (Appendix B, Table B-2). This indicates potential matrix interferences. Such interferences could affect precision results. The non-compliance for iron may be attributed to potential matrix interferences. Assessment of the serial dilution data for the other non-compliant analytes indicates that criteria was met for them (Appendix B, Table B-2).

One (1) of the eleven (11) target analytes detected in the metals analysis of the field duplicate pair of sample 09S00100 exhibited a non-compliant RPD (Table 2-13). The target analyte with a non-compliant RPD was chromium. The analyte was detected in the method blank associated with the field duplicate pair (Table 4-32, SDG OR001). The analyte concentration in the field duplicate sample was within the action level (5 times the contamination level) for qualification as a non-detect at the reported value. The concentration in the original sample was above the action level. The non-compliance for the analyte chromium can be attributed to laboratory contamination. Assessment of the serial dilution data indicates that criteria was met for the non-compliant compounds (Appendix B, Table B-2).

Five (5) of the fourteen (14) target analytes detected in the metals analysis of the field duplicate pair of sample 07D01201 exhibited non-compliant RPDs (Table 2-13). The target analytes with non-compliant RPDs were copper, lead, mercury, selenium, and zinc. The analytes copper, mercury, and selenium were detected at concentrations below the CRDL in both the original sample and the field duplicate sample. The non-compliance for copper, mercury, and selenium can be attributed to the low concentrations detected. Both lead and zinc were detected in the preparation blank associated with the field duplicate pair (Table 4-32, SDG OR002). Although the results in the field duplicate pair were not qualified based on the preparation blank contamination (greater than the 5X contamination level action limit), precision results can be affected by laboratory contamination. The non-compliance for lead and zinc may be attributed to laboratory contamination. Assessment of the serial dilution data for the non-compliant analytes indicates that criteria was met. (Appendix B, Table B-2).

Four (4) of the eight (8) target analytes detected in the metals analysis of the field duplicate pair of sample 06D01401 exhibited non-compliant RPDs (Table 2-13). The target analytes with non-compliant RPDs were aluminum, calcium, copper, and lead. The analytes copper and calcium were detected at concentrations below the CRDL in both the original sample and the field duplicate sample. The non-compliance for copper and calcium can be attributed to the low concentrations detected. Both aluminum and lead were detected in the preparation blank associated with the field duplicate pair (Table 4-32, SDG OR002). Although the results in the field duplicate pair were not qualified based on the preparation blank contamination (greater than the 5X contamination level action limit), precision results can be affected by laboratory contamination. The non-compliance for lead and zinc may be attributed to laboratory contamination. Assessment of the serial dilution data for the non-compliant analytes indicates that criteria was met. (Appendix B, Table B-2).

One (1) of the eight (8) target analytes detected in the metals analysis of the field duplicate pair of sample 08B00700 exhibited a non-compliant RPD (Table 2-13). The target analyte with a non-compliant RPD was calcium. The analyte calcium was detected at concentrations below the CRDL in both the original sample and the field duplicate sample. The non-compliance for calcium can be attributed to the low concentrations detected. Assessment of the serial dilution data indicates that criteria was met for the non-compliant compounds (Appendix B, Table B-2).

One (1) of the fifteen (15) target analytes detected in the metals analysis of the field duplicate pair of sample ORB00601 exhibited a non-compliant RPD (Table 2-13). The target analyte with a non-compliant RPD was barium. The analyte barium was detected at concentrations below the CRDL in both the original sample and the field duplicate sample. The non-compliance for barium can be attributed to the low concentrations detected. Assessment of the serial dilution data indicates that criteria was met for the non-compliant compounds (Appendix B, Table B-2).

One (1) of the seven (7) target analytes detected in the metals analysis of the field duplicate pair of sample ORB01401 exhibited a non-compliant RPD (Table 2-13). The target analyte with a non-compliant RPD was barium. The analyte barium was detected at concentrations below the CRDL in both the original sample and the field duplicate sample. The non-compliance for barium can be attributed to the low concentrations detected. Assessment of the serial dilution data indicates that criteria was met for the non-compliant compounds (Appendix B, Table B-2).

One (1) of the ten (10) target analytes detected in the metals analysis of the field duplicate pair of sample ORS01201 exhibited a non-compliant RPD (Table 2-13). The target analyte with a non-compliant RPD was vanadium. The analyte vanadium was detected at concentrations below the CRDL in both the original sample and the field duplicate sample. The non-compliance for vanadium can be attributed to the low concentrations detected. Assessment of the serial dilution data indicates that criteria was met for the non-compliant compounds (Appendix B, Table B-2).

The TPH analysis of the field duplicate pairs of samples 07D01201 and 06D01201 exhibited non-compliant RPDs (Table 2-15). The methodology utilized for the analysis of total petroleum hydrocarbons does not lend itself well to precision measurements because of the potential for significant target compound losses during the extraction procedure. Therefore, the non-compliance for TPH may be attributed to the analytical method.

The TOC analysis of the field duplicate pair of sample 07D01201exhibited an acceptable RPD (Table 2-16). The TOC analysis of the field duplicate pair of sample 06D01201 exhibited a non-compliant RPD (Table 2-16). The methodology utilized for the analysis of total organic carbon does not lend itself well to precision measurements because sample homogeneity is extremely important for accurate precision measurements. The sample aliquot used in the TOC analysis is 0.1 gram of

sample. The potential for inhomogeneous sample is significant. Therefore, the non-compliance for TOC may be attributed to the analytical method.

The evaluation of precision of the soil matrix for the MS/MSD samples is provided in Tables 2-24 through 2-31. All MS/MSD sample pairs analyzed for volatiles, semivolatiles, cyanide, TPH and TOC exhibited acceptable RPDs between spike compounds (Tables 2-24, 2-25, 2-29, 2-30, and 2-31).

The pesticides/PCBs analysis of the MS/MSD pair of sample 0RB01201 exhibited a non-compliant RPD for the compound 4,4'-DDT (Table 2-26). However, based on the assessment of additional QC criteria, the analytical data did not require qualification.

The chlorinated herbicides analysis of the MS/MSD pair of sample 0RB00701 exhibited a non-compliant RPD for the compound dinoseb (Table 2-27). However, based on the assessment of additional QC criteria, the analytical data did not require qualification.

The metals analysis of the MD of sample 09S00200 exhibited non-compliant RPDs for the analytes iron and mercury (Table 2-28). The analyte iron didn't require qualifications because the RPD result was not greater than 35%. Positive results reported for mercury in associated samples were appropriately qualified as estimated, J.

The metals analysis of the MD of sample 09D01201 exhibited non-compliant RPDs for the analytes iron and lead (Table 2-28). The analytes didn't require qualifications because the RPD result was not greater than 35%.

The metals analysis of the MD of sample 0RB00701 exhibited non-compliant RPDs for the analytes iron and lead (Table 2-28). Positive results reported for lead and iron in associated samples were appropriately qualified as estimated, J.

Based on assessment of duplicate precision evaluation criteria, the soil matrix analytical data was acceptable for each SDG with the noted potential for bias in the semivolatile compound benzo(k)fluoranthene and the metals analytes iron, lead and mercury.

3.0 ACCURACY

The assessment of accuracy is evaluated by comparison of the percent recovery (%R) computed from the known concentration of analyte spikes and their recovered concentration versus the analytical method acceptance criteria. Spike recoveries provide an indication of bias, where the reported data may either overestimate or underestimate the actual concentration of detected compounds and/or the detection limits. Recoveries outside acceptable criteria may be caused by factors such as matrix interference, poor analytical precision, or instrument calibration.

The following Sections summarize the evaluation of analytical accuracy for the water matrix for the following analytical groups:

- Low concentration volatile organic compounds (LCVOCs);
- GC/MS volatile organic compounds (GC/MS VOCs);
- Low concentration semivolatile organic compounds (LCSVOCs);
- GC/MS semivolatile organic compounds (SVOCs);
- polynuclear aromatic hydrocarbons (PAHs);
- pesticides, PCBs,;
- chlorinated herbicides;
- inorganics, cyanide, TPH, and TOC.

Accuracy was assessed using MS and MSD samples for organic analyses and MS samples for inorganic analyses for each matrix, as well as surrogate compound recoveries for those analytical fraction which utilize them. The results of the evaluation of accuracy for the MS/MSD samples is provided in Tables 2-17 through 2-23 for water matrix and Tables 2-24 through 2-31 for the soil matrix. The results of the evaluation of accuracy for the surrogates in the samples are provided in Table 3-1 through 3-7 for the water matrix and Tables 3-8 through 3-11 for the soil matrix.

3.1 Water Matrix

All MS/MSD sample pairs analyzed for low concentration semivolatiles, polynuclear aromatic hydrocarbons, chlorinated herbicides, and metals exhibited acceptable recoveries of spike compounds (Tables 2-18, 2-20, 2-22, and 2-23).

The surrogate recoveries for low concentration volatiles, volatiles, low concentration semivolatiles, and chlorinated herbicides were acceptable (Tables 3-1, 3-2, 3-3, and 3-7).

The MS/MSD of sample 02G00101 analyzed for low concentration volatiles organics had non-compliant %Rs for carbon tetrachloride, trichloroethene, benzene, and tetrachloroethene in the MS or the MSD (Table 2-17). Based on the assessment of additional QC criteria the analytical data did not require qualification.

The MS/MSD pairs of samples 08G00401, ORG00201, and 05G00201 analyzed for semivolatiles exhibited recoveries above the QC limit for nitrophenol in the MS and/or the MSD (Table 2-19). However, based on he assessment of additional QC criteria the analytical data did not require qualification.

Thirteen (13) semivolatile samples exhibited acid surrogate recoveries which were outside the minimum acceptable criteria for accuracy (Table 3-4). The surrogate compound terphenyl-D_{14} was recovered below the QC limits. One (1) semivolatile sample exhibited a surrogate recovery which was above the maximum acceptable criteria for accuracy (Table 3-4). The surrogate compound 2,4,6-tribromophenol was recovered above the QC limits. However, the National Functional

TABLE 3 - 1
SURROGATE % RECOVERIES
LOW CONCENTRATION VOLATILE WATER SAMPLES
NTC-ORLANDO, GROUP 1 SCREENING STUDY
AND BACKGROUND SAMPLING PROGRAM

SDG	SAMPLE ID	SMC1			TOTAL OUT
OR005	OOT00011	96			0
	01G00401	100			0
	01G00101	100			0
	01G00201	92			0
	01G00301	104			0
	09G00201	102			0
	09G00301	103			0
	09G00401	108			0
	BLIND SAMPLE	92			0
	OOR00014	92			0
	STORAGE	91			0
	08G00101	98			0
	08G00201	100			0
	09G00101	109			0
	08G00301	103			0
	08G00401	105			0
	08G00401MS	102			0
	08G00401MSD	108			0
	08G00401D	109			0
	OOR00011	93			0
	OOT00008	96			0
	STORAGE	97			0
	OOT00005	104			0
	10G00101	103			0
	02G00601	102			0
	STORAGE	97			0
OR011	OOR00024	100			0
	ORG00301	85			0
	ORG00401	96			0
	ORG00501	98			0
	ORG00601	88			0
	ORG00701	95			0
	ORG00801	96			0
	ORG00901	96			0
	ORG01001	89			0
	OOT00023	104			0
	OOT00023	87			0
	ORG00701D	100			0
	ORG00201D	104			0
	ORG00201	103			0
	ORG00201MS	103			0
	ORG00201MSD	103			0
	STORAGE BLK1	108			0
	STORAGE BLK2	104			0

TABLE 3 - 1, CONTINUED
SURROGATE % RECOVERIES
LOW CONCENTRATION VOLATILE WATER SAMPLES
NTC-ORLANDO, GROUP 1 SCREENING STUDY
AND BACKGROUND SAMPLING PROGRAM

SDG	SAMPLE ID	SMC1			TOTAL OUT
OR012	03G00101	82			0
	03G00201	96			0
	03G00301	102			0
	03G00401	81			0
	05G00101	100			0
	05G00201MS	100			0
	05G00201MSD	100			0
	05G00301	102			0
	08G00501	102			0
	08G00601	88			0
	08G00701	99			0
	08G00801	100			0
	08G00901	88			0
	05G00301D	102			0
	OOT00025	87			
	05G00201	97			0
	ORG00101	85			0
OR002	OOF00001	100			0
	STORAGE	106			0

SMC1 = BROMOFLUOROBENZENE QC LIMITS 80% - 120%

# SAMPLES	% REC IN	%REC OUT	% TOTAL IN
63	66	0	100.0%

TABLE 3 - 2
SURROGATE % RECOVERIES
GC/MS VOLATILE WATER SAMPLES
NTC-ORLANDO, GROUP 1 SCREENING STUDY
AND BACKGROUND SAMPLING PROGRAM

SDG	SAMPLE ID	SMC1	SMC2	SMC3	TOTAL OUT
OR001	OOR00005	103	105	104	0
	OOR00003	103	100	105	0
	OOR00004	103	102	105	0
	OOR00001	101	109	108	0
	OOR00002	105	103	106	0
OR002	OOR00009	92	99	101	0
	OOT00001	102	105	100	0
	OOT00002	90	92	90	0
	OOT00003	107	106	100	0
	OOT00004	101	102	98	0
	OOR00006	104	104	99	0
OR010	OOR00023	99	101	97	0
	OOT00022	107	110	111	0
OR009	OOR00021	100	100	99	0
	OOT00020	99	102	99	0
	OOT00021	99	98	98	0
	OOR00022	99	100	98	0
OR008	OOR00016	102	104	98	0
	OOT00015	103	103	97	0
	OOR00017	100	100	96	0
	OOT00016	103	102	100	0
	OOR00018	97	99	98	0
	OOT00017	106	102	93	0
	OOR00019	102	99	98	0
	OOT00018	103	103	95	0
	OOROOO20	98	101	97	0
	OOT00019	98	98	97	0

SMC1 = TOLUENE-D8 QC LIMITS 88% - 110%
SMC2 = BROMOFLUOROBENZENE QC LIMITS 86% - 115%
SMC3 = 1,2-DICHLOROETHANE-D4 QC LIMITS 76% - 114%

# SAMPLES	% REC IN	%REC OUT	% TOTAL IN
27	81	0	100.0%

TABLE 3 - 3
SURROGATE % RECOVERIES
LOW CONCENTRATION SEMIVOLATILE WATER SAMP
NTC-ORLANDO, GROUP 1 SCREENING STUDY
AND BACKGROUND SAMPLING PROGRAM

SDG	SAMPLE ID	S1	TOTAL OUT
OR005	09G00101	66	0
	08G00101	68	0
	08G00201	61	0
	08G00301	65	0
	08G00401	60	0
	08G00401D	54	0
	OOR00011	66	0
	10G00101	66	0
	02G00601	66	0
	OOF00001	68	0
	01G00101	64	0
	01G00201	50	0
	01G00301	59	0
	01G00401	64	0
	09G00201	47	0
	09G00301	55	0
	BLIND SAMPLE	48	0
	OOR00014	57	0
	09G00401	33	0
OR011	ORG00201	76	0
	ORG00201MS	80	0
	ORG00201MSD	77	0
	ORG00301	76	0
	ORG00401	75	0
	ORG00501	54	0
	ORG00601	74	0
	ORG00701	79	0
	ORG00801	69	0
	ORG01001	77	0
	ORG00701D	76	0
	ORG00201D	77	0
	OOR00024	76	0
	ORG00901	94	0

TABLE 3 - 3, CONTINUED
SURROGATE % RECOVERIES
LOW CONCENTRATION SEMIVOLATILE WATER SAMP
NTC-ORLANDO, GROUP 1 SCREENING STUDY
AND BACKGROUND SAMPLING PROGRAM

SDG	SAMPLE ID	S1	TOTAL OUT
OR012	03G00101	105	0
	03G00201	99	0
	03G00301	92	0
	03G00401	108	0
	05G00101	98	0
	05G00201MS	92	0
	05G00201MSD	95	0
	05G00301	89	0
	08G00501	78	0
	08G00601	74	0
	08G00701	82	0
	08G00801	58	0
	08G00901	81	0
	05G00301D	81	0
	05G00201	84	0
	ORG00101	64	0

S1 - TETRACHLORO-M-XYLENE QC LIMITS 30% - 120%

# SAMPLES	% REC IN	%REC OUT	% TOTAL IN
49	49	0	100.0%

TABLE 3 - 4
SURROGATE % RECOVERIES
SEMIVOLATILE WATER SAMPLES
NTC-ORLANDO, GROUP 1 SCREENING STUDY
AND BACKGROUND SAMPLING PROGRAM

SDG	SAMPLE ID	S1	S2	S3	S4	S5	S6	S7	S8	TOTAL OUT
OR005	02G00601	86	80	*32	78	73	69	81	81	1
	09G00101	98	91	*28	83	94	101	89	84	1
	08G00101	86	87	*31	76	80	95	80	75	1
	08G00201	94	78	*22	78	91	96	84	81	1
	08G00301	98	93	33	88	96	104	93	88	0
	08G00401	87	87	35	74	86	101	86	81	0
	08G00401MS	89	78	*22	71	80	92	79	75	1
	08G00401MSD	96	79	*23	77	86	95	83	77	1
	08G00401D	94	84	*27	75	83	90	83	80	1
	OOR00011	98	102	78	69	69	53	79	86	0
	10G00101	76	71	*32	59	62	86	63	67	1
	01G00101	85	89	90	71	79	79	77	80	0
	01G00201	93	97	46	78	86	91	83	85	0
	01G00301	84	85	45	70	76	84	74	76	0
	01G00401	86	98	68	68	85	72	77	81	0
	09G00201	85	70	*29	79	78	114	82	77	1
	09G00301	79	76	39	78	80	*127	81	78	1
	BLIND SAMPLE	87	75	36	80	80	108	83	79	0
	OOR00014	84	82	97	71	82	97	80	79	0
	09G00401	80	69	*28	67	65	113	78	82	1
OR011	ORG00201	76	77	97	65	64	76	66	71	0
	ORG00201MS	78	73	85	69	68	96	70	76	0
	ORG00201MSD	71	71	87	62	62	85	64	70	0
	ORG00401	77	76	84	66	63	80	67	73	0
	ORG00601	76	75	47	63	64	88	66	73	0
	ORG00701	82	79	38	64	65	82	69	75	0
	ORG00801	71	71	34	58	58	72	62	68	0
	ORG00901	73	69	49	65	61	84	66	71	0
	ORG01001	73	76	57	68	65	72	66	73	0
	ORG00701D	78	80	47	70	66	82	67	74	0
	ORG00201D	78	83	49	67	66	74	67	74	0
	OOR00024	78	77	79	72	66	81	69	74	0
	ORG00301	76	80	79	66	66	82	66	74	0
	ORG00501	79	79	37	69	69	69	69	75	0

TABLE 3 - 4, CONTINUED
SURROGATE % RECOVERIES
SEMIVOLATILE WATER SAMPLES
NTC-ORLANDO, GROUP 1 SCREENING STUDY
AND BACKGROUND SAMPLING PROGRAM

SDG	SAMPLE ID	S1	S2	S3	S4	S5	S6	S7	S8	TOTAL OUT
OR012	03G00101	74	73	87	68	65	84	71	69	0
	03G00201	77	77	69	74	68	87	74	71	0
	03G00301	79	77	95	76	71	88	75	71	0
	04G00401	84	78	96	78	73	91	78	74	0
	05G00101	77	71	76	75	69	93	74	68	0
	05G00201MS	75	72	49	70	68	87	72	68	0
	05G00201MSD	84	78	50	77	75	97	78	77	0
	05G00301	72	72	67	69	65	93	70	69	0
	08G00501	76	78	*30	72	67	87	73	73	1
	08G00601	68	68	*30	64	60	81	66	65	1
	08G00701	75	75	*31	71	77	89	72	72	1
	08G00801	76	75	42	73	76	92	74	75	0
	08G00901	81	84	43	64	74	90	74	82	0
	05G00301D	72	75	68	62	64	83	66	72	0
	05G00201	85	87	74	66	71	98	74	84	0
	ORG00101	87	88	49	76	82	98	82	86	0
OR001	OOR00005	88	83	84	71	64	55	74	74	0
	OOR00002	76	73	80	67	57	55	69	69	0
	OOR00003	74	75	70	63	58	55	70	69	0
	OOR00004	76	74	55	65	60	60	73	72	0
	OOR00001	73	71	83	63	54	48	65	67	0
	OOF00001	80	78	87	69	60	53	71	74	0
OR002	OOR00009	86	82	95	74	60	56	78	82	0
	OOR00006	79	75	79	70	67	59	72	68	0
OR010	OOR00023	86	93	78	84	80	108	93	86	0
OR009	OOR00021	92	86	109	103	93	104	109	82	0
	OOR00022	89	94	104	91	86	121	95	93	0
OR008	OOR00016	98	92	90	89	88	94	93	89	0
	OOR00018	95	90	101	89	86	98	92	89	0
	OOR00019	101	92	112	86	82	98	88	89	0
	OOR00017	90	85	85	78	76	94	82	81	0
	OOR00020	86	91	108	86	80	117	93	86	0

S1 = NITROBENZENE-d4 QC LIMITS = 35% - 114%
S2 = 2-FLUOROBIPHENYL QC LIMITS = 43% - 116%
S3 = TERPHENYL-d14 QC LIMITS = 33% - 114%
S4 = PHENOL-d5 QC LIMITS = 10% - 110%
S5 = 2-FLUOROPHENOL QC LIMITS = 21% - 110%
S6 = 2,4,6-TRIBROMOPHENOL QC LIMITS = 10% - 123%
S7 = 2-CHLOROPHENOL-D4 QC LIMITS = 33% - 110% (ADVISORY)
S8 = 1,2-DICHLOROBENZENE-D4 QC LIMITS = 16% - 110% (ADVISORY)

# SAMPLES	% REC IN	%REC OUT	% TOTAL IN
66	514	14	97.3%

TABLE 3 - 5
SURROGATE % RECOVERIES
POLYNUCLEAR AROMATIC HYDROCARBON WATER S
NTC-ORLANDO, GROUP 1 SCREENING STUDY
AND BACKGROUND SAMPLING PROGRAM

SDG	SAMPLE ID	S1	TOTAL OUT
OR005	10G00101	*27	1
	10G00101RE	*26	1
	02G00601	50	0
	02G00601RE	44	0
	09G00101	*22	1
	09G00101RE	*22	1
	08G00101	*25	1
	08G00101RE	40	0
	08G00201	*28	1
	08G00201RE	30	0
	08G00301	*27	1
	08G00301RE	30	0
	08G00401	*23	1
	08G00401RE	*25	1
	08G00401D	*20	1
	08G00404DRE	*23	1
	OOR00011	*29	1
	OOR00011RE	33	0
	08G00401MS	*25	1
	08G00401MS1	*21	1
	08G00401MSD	*19	1
	08G00401MSD1	*27	1
	01G00101	87	0
	01G00201	*29	1
	01G00201RE	40	0
	01G00301	51	0
	01G00401	93	0
	09G00201	34	0
	09G00301	45	0
	09G00401	42	0
	BLINDSAMPLE	33	0
	OOR00014	42	0
OR011	ORG00201	87	0
	ORG00301	38	0
	IRG00401	90	0
	ORG00501	30	0
	ORG00601	43	0
	ORG00701	44	0
	ORG00801	44	0
	ORG00901	91	0
	ORG01001	91	0
	ORG00701D	86	0
	ORG00201D	81	0
	OOR00024	81	0
	ORG00201MS	87	0
	ORG00201MSD	92	0

TABLE 3 - 5, CONTINUED
SURROGATE % RECOVERIES
POLYNUCLEAR AROMATIC HYDROCARBON WATER S
NTC-ORLANDO, GROUP 1 SCREENING STUDY
AND BACKGROUND SAMPLING PROGRAM

SDG	SAMPLE ID	S1	TOTAL OUT
OR012	03G00101	84	0
	03G00201	64	0
	03G00301	73	0
	03G00401	86	0
	05G00101	61	0
	05G00201	75	0
	05G00301	59	0
	08G00501	31	0
	08G00601	51	0
	08G00701	*28	1
	08G00701RE	44	0
	08G00801	*30	1
	08G00801RE	*26	1
	08G00901	58	0
	05G00301D	72	0
	ORG00101	34	0
	05G00201MS	91	0
	05G00201MSD	73	0
OR001	OOF00001	33	0

S1 - TERPHENYL-D14 QC LIMITS: NONE PR

# SAMPLES	% REC IN	%REC OUT	% TOTAL IN
65	45	20	69.2%

TABLE 3 - 6
SURROGATE % RECOVERIES
PESTICIDES/PCB WATER SAMPLES
NTC-ORLANDO, GROUP 1 SCREENING STUDY
AND BACKGROUND SAMPLING PROGRAM

SDG	SAMPLE ID	TCX1	TCX2	DCB1	DCB2	TOTAL OUT
OR005	02G00601	70	78	72	84	0
	10G00101	68	74	78	85	0
	OOR00011	76	80	95	96	0
	08G00101	60	65	102	108	0
	08G00201	*48	*50	81	84	2
	08G00301	61	64	94	98	0
	08G00401	60	63	91	96	0
	08G00401D	65	68	90	95	0
	08G00401MS	*52	*54	82	89	2
	08G00401MSD	*55	*58	80	84	2
	09G00101	66	72	96	95	0
	OOR00014	*59	64	86	86	1
	01G00101	81	84	102	102	0
	01G00201	76	77	74	80	0
	01G00301	70	72	90	92	0
	01G00401	*56	*59	95	96	2
	09G00201	*57	60	74	82	1
	09G00301	90	62	80	86	0
	09G00401	84	94	78	98	0
	BLIND SAMPLE	*59	62	66	72	1
OR011	OOR00024	74	63	88	87	0
	ORG00201	68	*56	92	97	1
	ORG00201D	78	66	97	100	0
	ORG00301	74	64	83	83	0
	ORG00401	69	*58	86	84	1
	ORG00501	*52	*45	60	67	2
	ORG00601	*49	60	71	78	1
	ORG00701	*58	*52	95	102	2
	ORG00701D	*59	*47	91	102	2
	ORG00801	60	*52	80	84	1
	ORG00901	70	62	86	91	0
	ORG01001	67	*58	80	84	1
	ORG00201MS	72	62	108	109	0
	ORG00201MSD	60	*52	103	104	1

TABLE 3 - 6, CONTINUED
SURROGATE % RECOVERIES
PESTICIDES/PCB WATER SAMPLES
NTC-ORLANDO, GROUP 1 SCREENING STUDY
AND BACKGROUND SAMPLING PROGRAM

SDG	SAMPLE ID	TCX1	TCX2	DCB1	DCB2	TOTAL OUT
OR012	03G00101	83	72	98	98	0
	03G00201	78	66	78	84	0
	03G00301	77	66	101	103	0
	03G00401	80	69	96	98	0
	05G00101	72	63	96	98	0
	05G00201	75	66	98	99	0
	05G00201MS	67	*59	98	97	1
	05G00201MSD	74	65	99	98	0
	05G00301	70	62	105	108	0
	05G00301D	74	64	99	102	0
	08G00501	66	*57	94	98	1
	08G00601	74	64	78	84	0
	08G00701	70	62	90	92	0
	08G00801	69	60	65	66	0
	08G00901	86	73	98	98	0
	ORG00101	77	66	80	82	0
OR001	OOR00005	77	78	112	114	0
	OOR00002	106	106	121	120	0
	OOR00003	106	110	121	122	0
	OOR00004	111	115	118	122	0
	OOR00001	119	120	126	126	0
	OOF00001	116	118	121	122	0
OR002	OOR00009	93	97	110	112	0
	OOR00006	88	90	104	105	0
OR010	OOR00023	88	74	98	98	0
OR009	OOR00021	83	76	115	116	0
	OOR00022	77	68	111	124	0
OR008	OOR00016	78	71	105	104	0
	OOR00017	84	76	108	114	0
	OOR00018	82	74	102	102	0
	OOR00019	76	68	98	105	0
	OOR00020	77	70	84	90	0

TCX = TETRACHLORO-M-XYLENE QC LIMITS = 60%-150%
DCB = DECACHLOROBIPHENYL QC LIMITS = 60%-150%

# SAMPLES	% REC IN	%REC OUT	% TOTAL IN
66	239	25	90.5%

TABLE 3 - 7
SURROGATE % RECOVERIES
CHLORINATED HERBICIDES
NTC-ORLANDO, GROUP 1 SCREENING STUDY
AND BACKGROUND SAMPLING PROGRAM

SDG	SAMPLE ID	DCBA		TOTAL OUT
OR005	09G00201	86		0
	09G00301	97		0
	09G00401	113		0
	BLIND SAMPLE	86		0
	09G00101	82		0
	08G00101	90		0
	08G00201	88		0
	08G00301	85		0
	08G00401	92		0
	08G00401MS	90		0
	08G00401MSD	86		0
	08G00401D	84		0
	OOR00011	83		0
OR011	OOR00024	88		0
	ORG00201	91		0
	ORG00201D	88		0
	ORG00301	90		0
	ORG00401	88		0
	ORG00501	90		0
	ORG00601	86		0
	ORG00701	88		0
	ORG00701D	82		0
	ORG00801	88		0
	ORG00901	92		0
	ORG01001	91		0
	ORG00201MS	95		0
	ORG00201MSD	92		0
OR012	08G00501	91		0
	08G00601	86		0
	08G00701	84		0
	08G00801	80		0
	08G00901	84		0
	ORG00101	87		0
OR001	OOR00005	88		0
	OOR00003	84		0
	OOR00004	74		0
	OOR00001	86		0
	OOF00001	88		0
OR002	OOR00009	67		0
	OOR00006	93		0
OR010	OOR00023	82		0
OR009	OOR00021	90		0
	OOR00022	92		0
OR008	OOR00016	86		0
	OOR00017	88		0

DCAA QC LIMITS = 50%-150%

# SAMPLES	% REC IN	%REC OUT	% TOTAL IN
45	45	0	100.0%

TABLE 3 - 8
SURROGATE % RECOVERIES
GC/MS VOLATILE SOIL SAMPLES
NTC-ORLANDO, GROUP 1 SCREENING STUDY
AND BACKGROUND SAMPLING PROGRAM

SDG	SAMPLE ID	SMC1	SMC2	SMC3	TOTAL OUT
OR001	01S00100	116	92	104	0
	09S00100	113	92	105	0
	09S00100D	119	86	104	0
	09S00200	118	92	106	0
	09S00200MS	118	92	104	0
	09S00200MSD	118	87	106	0
	09S00300	122	89	102	0
	01B00101	106	102	106	0
	01B00401	106	103	107	0
	09S00100DRE	122	86	105	0
	09S00400	121	85	98	0
	08S00100	121	88	100	0
	08S00200	109	87	98	0
	08S00300	111	89	99	0
	08S00400	116	89	99	0
	08S00500	120	86	97	0
	08S00600	133	79	98	0
	08S00700	114	91	100	0
	08S00800	116	87	100	0
	01B00201	106	99	102	0
	01B00301	104	98	102	0
	09B00101	107	94	102	0
	10B00101D	131	73	101	0
	08B00101	107	95	102	0
	08S00100RE	121	85	101	0
	08S00500RE	122	83	100	0
	08S00600RE	131	77	103	0
	10B00101	105	104	101	0
	10B00101RE	131	73	99	0
OR008	08B00501	101	93	97	0
	08B00601	104	92	100	0
	05B00301	111	85	96	0
	08B00701	100	97	96	0
	08B00801	101	96	97	0
	08B00801MS	106	98	97	0
	08B00801MSD	101	94	95	0
	08B00901	103	101	98	0
	03S00101	115	93	94	0
	03S00201	111	90	96	0
	03B00101	105	103	92	0
	03B00201	105	101	97	0
	05B00101	106	98	96	0
	05B00201	108	94	98	0
	03S00401	110	95	96	0
	03B00301D	102	101	95	0
	03B00301	104	102	95	0
	03B00401	106	103	93	0
	08B00701D	100	97	99	0
	03S00301	103	93	100	0

TABLE 3 - 8, CONTINUED
SURROGATE % RECOVERIES
GC/MS VOLATILE SOIL SAMPLES
NTC-ORLANDO, GROUP 1 SCREENING STUDY
AND BACKGROUND SAMPLING PROGRAM

SDG	SAMPLE ID	SMC1	SMC2	SMC3	TOTAL OUT
OR002	08B00201	107	93	101	0
	08B00301	109	111	112	0
	08B00401	100	102	102	0
	02B00601	88	98	119	0
	07D00201	111	92	103	0
	07D00301	102	106	101	0
	01B00101	101	73	106	0
	07D00101	102	100	107	0
	07D00401	*147	68	101	0
	07D00501	109	75	99	0
	07D00601	137	86	116	0
	07D01401	95	94	118	0
	07D00401RE	98	71	100	0
	07D00501RE	120	82	110	0
	07D00601RE	124	67	102	0
	07D01401RE	109	92	*122	0
	07D01001	108	104	99	0
	07D01201	108	112	104	0
	07D01201MS	104	102	102	0
	07D01201MSD	115	105	102	0
	07D01301	124	84	109	0
	07D01201D	106	100	105	0
	07D01501	110	86	102	0
	06D01201	88	106	118	0
	06D01301	113	89	110	0
	06D01401	104	106	114	0
	06D01201D	112	109	108	0
	06D01301RE	138	76	98	0
OR009	ORS00101	106	88	96	0
	ORB00301	99	98	95	0
	ORS00301	110	86	96	0
	ORB00201	98	93	96	0
	ORS00201	103	90	99	0
	ORB00101	95	94	98	0
	ORB00401	97	97	101	0
	ORS00401	110	88	100	0
	ORB00501	99	98	99	0
	ORS00501	104	91	97	0
	ORB00601	100	96	95	0
	ORS00601	108	88	96	0
	ORB00701	106	97	105	0
	ORB00701MS	107	95	101	0
	ORB00701MSD	102	95	98	0
	ORS00701	106	87	95	0
	ORB00801	108	104	96	0
	ORS00801	105	96	98	0
	ORB00901	95	99	103	0
	ORS00901	108	94	99	0
	ORB00601D	104	98	101	0

TABLE 3 - 8, CONTINUED
SURROGATE % RECOVERIES
GC/MS VOLATILE SOIL SAMPLES
NTC-ORLANDO, GROUP 1 SCREENING STUDY
AND BACKGROUND SAMPLING PROGRAM

SDG	SAMPLE ID	SMC1	SMC2	SMC3	TOTAL OUT
OR010	ORB01001	100	102	104	0
	ORS01001	101	99	101	0
	ORB01101	98	102	99	0
	ORS01101	103	98	100	0
	ORB01201	103	100	98	0
	ORB01201MS	102	99	101	0
	ORB01201MSD	103	99	100	0
	ORS01201	102	101	99	0
	ORB01401	101	102	102	0
	ORS01401	99	97	100	0
	ORB01501	99	101	98	0
	ORS01501	102	95	99	0
	ORB01601	101	97	100	0
	ORS01601	101	99	100	0
	ORB01001D	101	101	99	0
	ORB01401D	101	100	101	0
	ORS01201D	104	97	99	0
	ORB01301	110	94	102	0
	ORS01301	117	91	98	0

SMC1 = TOLUENE-D8 QC LIMITS 84% - 138%
SMC2 = BROMOFLUOROBENZENE QC LIMITS 59% - 113%
SMC3 = 1,2-DICHLOROETHANE-D4 QC LIMITS 70% - 121%

# SAMPLES	% REC IN	%REC OUT	% TOTAL IN
117	351	0	100.0%

TABLE 3 - 9
SURROGATE % RECOVERIES
SEMIVOLATILE SOIL SAMPLES
NTC-ORLANDO, GROUP 1 SCREENING STUDY
AND BACKGROUND SAMPLING PROGRAM

SDG	SAMPLE ID	S1	S2	S3	S4	S5	S6	S7	S8	TOTAL OUT
OR001	01S00100	28	31	34	25	*22	29	25	24	1
	09S00100	64	49	47	69	65	76	67	44	0
	09S00100D	82	82	86	77	71	76	75	73	0
	09S00200	89	89	89	78	72	98	78	81	0
	09S00200MS	77	74	82	77	72	79	71	74	0
	09S00200MSD	80	77	85	80	74	82	73	76	0
	09S00300	80	82	71	76	70	90	76	75	0
	01B00101	77	76	82	72	68	80	73	74	0
	01B00401	75	74	75	67	63	77	68	71	0
	09S00400	69	72	72	64	61	69	66	66	0
	08S00100	80	78	89	69	74	85	72	73	0
	08S00200	67	65	70	58	61	57	59	61	0
	08S00300	73	70	81	63	67	70	64	67	0
	08S00400	81	79	85	72	75	76	73	73	0
	08S00500	79	80	80	68	75	78	71	74	0
	08S00600	76	74	76	57	67	71	62	67	0
	08S00700	86	84	80	64	75	76	69	75	0
	08S00800	75	71	74	68	67	71	66	66	0
	01B00201	84	81	81	70	72	72	67	76	0
	01B00301	82	81	85	59	69	77	64	75	0
	09B00101	78	78	93	49	62	70	57	70	0
	10B00101D	84	86	89	67	74	81	72	75	0
	08B00101	75	73	84	76	66	76	72	71	0
	10B00101	80	82	86	54	64	74	60	71	0
OR008	08B00501	91	87	100	73	70	79	74	82	0
	08B00601	88	79	92	89	79	100	83	82	0
	05B00301	92	86	92	70	73	101	72	81	0
	08B00701	92	86	112	82	77	98	82	83	0
	08B00801	96	89	111	78	71	86	76	83	0
	08B00801MS	97	88	109	84	75	105	80	86	0
	08B00801MSD	95	87	102	75	69	82	66	82	0
	08B00901	99	91	108	86	77	102	76	85	0
	03S00101	84	91	99	84	76	89	89	87	0
	03S00201	58	72	77	54	48	80	55	48	0
	03B00101	88	96	94	72	59	62	77	86	0
	03B00201	87	94	93	78	64	79	83	94	0
	05B00101	84	94	104	70	70	97	85	92	0
	05B00201	72	80	87	69	60	74	76	77	0
	03S00401	79	88	110	68	62	106	80	83	0
	03B00301D	88	100	101	84	72	95	88	97	0
	03B00301	73	80	*149	70	60	87	73	78	1
	03B00401	83	89	110	84	71	89	84	90	0
	08B00701D	94	88	107	78	72	78	78	88	0
	04B00101	105	*117	118	91	81	*127	98	109	2
	04B00201	102	*118	112	33	*18	20	36	106	2
	04B00301	90	98	112	78	70	96	87	92	0
	03S00301	89	100	120	75	67	114	86	89	0

TABLE 3 - 9, CONTINUED
SURROGATE % RECOVERIES
SEMIVOLATILE SOIL SAMPLES
NTC-ORLANDO, GROUP 1 SCREENING STUDY
AND BACKGROUND SAMPLING PROGRAM

SDG	SAMPLE ID	S1	S2	S3	S4	S5	S6	S7	S8	TOTAL OUT
OR002	08B00201	84	80	88	81	72	80	79	77	0
	08B00301	80	78	87	65	64	72	71	72	0
	08B00401	77	76	84	75	67	74	74	72	0
	02B00601	78	84	82	73	69	62	67	73	0
	07D00201	83	87	85	62	62	83	64	71	0
	07D00301	80	82	80	65	64	83	66	70	0
	01B00101	77	78	77	65	62	83	64	71	0
	07D00101	76	77	75	66	63	79	67	67	0
	07D00401	60	61	54	48	48	66	50	52	0
	07D00501	84	86	76	70	68	89	70	72	0
	07D00601	81	84	79	65	73	71	66	72	0
	07D01401	82	81	77	70	67	90	70	68	0
	07D01001	79	80	74	75	76	70	69	74	0
	07D01201	78	82	75	74	75	70	68	72	0
	07D01201MS	78	80	74	71	78	70	61	73	0
	07D01201MSD	83	86	79	78	83	76	66	81	0
	07D01301	79	85	81	78	79	73	70	77	0
	07D01201D	86	92	91	79	79	71	78	90	0
	07D01501	81	84	76	60	73	62	66	72	0
	06D01201	85	83	86	70	62	79	67	72	0
	06D01301	82	84	77	70	67	88	68	71	0
	06D01401	87	88	82	74	71	86	73	78	0
	06D01201D	75	74	68	62	61	78	62	65	0
OR009	ORS00101	77	84	85	70	70	73	75	84	0
	ORB00301	87	96	85	73	76	78	80	92	0
	ORS00301	83	91	78	75	74	80	82	89	0
	ORB00201	83	92	83	63	50	27	62	92	0
	ORS00201	88	101	74	71	74	87	83	91	0
	ORB00101	89	96	86	81	80	77	87	96	0
	ORB00401	96	106	112	84	70	93	90	102	0
	ORS00401	96	113	119	82	79	119	94	101	0
	ORB00501	91	104	102	70	64	82	79	94	0
	ORS00501	38	42	42	35	34	51	38	40	0
	ORB00601	75	78	78	77	60	77	76	80	0
	ORS00601	85	92	98	81	64	99	85	92	0
	ORB00701	83	90	89	76	66	92	82	91	0
	ORB00701MS	97	107	103	88	71	115	102	98	0
	ORB00701MSD	91	101	90	87	68	111	95	89	0
	ORS00701	89	99	91	78	69	102	89	94	0
	ORB00801	91	100	102	84	70	102	93	104	0
	ORS00801	83	90	97	85	70	94	90	94	0
	ORB00901	86	95	96	83	68	93	92	100	0
	ORS00901	62	71	59	50	50	59	57	65	0
	ORB00601D	77	86	93	68	58	71	75	85	0

TABLE 3 - 9, CONTINUED
SURROGATE % RECOVERIES
SEMIVOLATILE SOIL SAMPLES
NTC-ORLANDO, GROUP 1 SCREENING STUDY
AND BACKGROUND SAMPLING PROGRAM

SDG	SAMPLE ID	S1	S2	S3	S4	S5	S6	S7	S8	TOTAL OUT
OR010	ORB01001	74	68	97	78	60	66	59	67	0
	ORS01001	80	75	100	89	71	77	62	73	0
	ORB01101	79	72	100	80	62	75	58	69	0
	ORS01101	76	71	96	84	66	79	59	68	0
	ORB01201	69	63	79	70	47	42	47	63	0
	ORB01201MS	78	74	96	78	68	60	59	84	0
	ORB01201MSD	78	72	94	80	71	68	60	81	0
	ORS01201	82	78	94	77	64	81	58	71	0
	ORB01401	77	66	95	66	45	35	52	67	0
	ORS01401	85	83	104	82	67	93	64	75	0
	ORB01501	79	74	95	78	60	64	58	72	0
	ORS01501	77	73	96	58	53	80	57	68	0
	ORB01601	92	89	115	84	73	82	69	80	0
	ORS01601	88	80	133	71	72	104	64	79	0
	ORB01001D	83	76	93	61	62	64	57	70	0
	ORS01601DL	70D	121D	119D	86D	94D	60D	97D	128D	0
	ORB01401D	79	88	94	75	72	54	64	80	0
	ORS01201D	80	89	88	85	78	68	68	80	0
	ORB01301	68	82	82	68	63	40	58	73	0
	ORS01301	83	89	84	87	82	69	69	80	0

S1 = NITROBENZENE-d4 QC LIMITS = 23% - 120%
S2 = 2-FLUOROBIPHENYL QC LIMITS = 30% - 115%
S3 = TERPHENYL-d14 QC LIMITS = 18% - 137%
S4 = PHENOL-d5 QC LIMITS = 24% - 113%
S5 = 2-FLUOROPHENOL QC LIMITS = 25% - 121%
S6 = 2,4,6-TRIBROMOPHENOL QC LIMITS = 19% - 122%
S7 = 2-CHLOROPHENOL-D4 QC LIMITS = 20% - 130% (ADVISORY)
S8 = 1,2-DICHLOROBENZENE-D4 QC LIMITS = 20% - 130% (ADVISORY)

# SAMPLES	% REC IN	%REC OUT	% TOTAL IN
111	882	6	99.3%

TABLE 3 - 10
SURROGATE % RECOVERIES
PESTICIDES/PCB SOIL SAMPLES
NTC-ORLANDO, GROUP 1 SCREENING STUDY
AND BACKGROUND SAMPLING PROGRAM

SDG	SAMPLE ID	TCX1	TCX2	DCB1	DCB2	TOTAL OUT
OR001	01S00100	*50	*50	75	70	2
	09S00100	0D	0D	0D	0D	0
	09S00100D	0D	0D	0D	0D	0
	09S00200	113	117	119	130	0
	09S00200MS	108	110	121	145	0
	09S00200MSD	113	118	118	146	0
	09S00300	118	118	114	126	0
	01B00101	100	101	102	110	0
	01B00401	103	105	110	113	0
	09S00400	118	126	110	108	0
	08S00100	116	117	131	146	0
	08S00200	121	125	122	130	0
	08S00300	118	120	113	120	0
	08S00400	114	116	122	117	0
	08S00500	0D	0D	0D	0D	0
	08S00600	0D	0D	0D	0D	0
	08S00700	122	128	114	136	0
	08S00800	115	119	104	128	0
	01B00201	109	111	101	126	0
	01B00301	110	114	112	114	0
	09B00101	117	118	116	126	0
	10B00101D	110	111	124	141	0
	08B00101	90	90	110	129	0
	10B00101	92	93	109	124	0
OR008	08B00501	85	76	95	102	0
	08B00601	85	76	94	101	0
	05B00301	88	78	94	112	0
	08B00701	85	74	101	103	0
	08B00801	76	65	91	95	0
	08B00801MS	82	72	95	99	0
	08B00801MSD	87	76	98	103	0
	08B00901	67	60	77	78	0
	03S00101	90	79	99	100	0
	03S00201	80	70	88	97	0
	03B00101	84	73	90	94	0
	03B00201	77	67	88	90	0
	05B00101	60	*52	68	76	1
	05B00201	80	68	86	90	0
	03S00401	81	70	89	95	0
	03B00301D	87	74	94	103	0
	03B00301	82	70	84	94	0
	03B00401	86	74	90	96	0
	08B00701D	83	73	90	96	0
	04B00101	61	*54	83	88	1
	04B00201	95	85	120	132	0
	04B00301	69	61	94	103	0
	03S00301	81	70	89	94	0

TABLE 3 - 10, CONTINUED
SURROGATE % RECOVERIES
PESTICIDES/PCB SOIL SAMPLES
NTC-ORLANDO, GROUP 1 SCREENING STUDY
AND BACKGROUND SAMPLING PROGRAM

SDG	SAMPLE ID	TCX1	TCX2	DCB1	DCB2	TOTAL OUT
OR002	08B00201	98	99	115	123	0
	08B00301	102	103	126	132	0
	08B00401	95	98	118	128	0
	02B00601	72	74	86	94	0
	07D00201	78	79	88	89	0
	07D00301	73	74	88	91	0
	01B00101	67	70	85	90	0
	07D00101	76	77	88	94	0
	07D00401	75	75	88	103	0
	07D00501	74	75	85	91	0
	07D00601	75	76	93	112	0
	07D01401	78	80	93	102	0
	07D01001	70	71	80	95	0
	07D01201	68	69	80	92	0
	07D01201MS	80	83	112	122	0
	07D01201MSD	76	79	95	100	0
	07D01301	70	73	84	89	0
	07D01201D	76	78	91	103	0
	07D01501	66	67	92	110	0
	06D01201	94	96	101	114	0
	06D01301	104	104	109	130	0
	06D01401	82	80	88	93	0
	06D01201D	97	99	102	118	0
OR009	ORS00101	67	60	87	85	0
	ORB00301	98	84	105	109	0
	ORS00301	96	82	121	113	0
	ORB00201	88	74	94	112	0
	ORS00201	90	78	96	93	0
	ORB00101	96	82	101	104	0
	ORB00401	81	69	86	89	0
	ORS00401	86	72	93	99	0
	ORB00501	82	74	85	97	0
	ORS00501	92	78	94	117	0
	ORB00601	82	67	88	87	0
	ORS00601	82	67	88	87	0
	ORB00701	88	70	90	95	0
	ORB00701MS	80	64	83	86	0
	ORB00701MSD	89	71	92	96	0
	ORS00701	89	74	96	99	0
	ORB00801	*0	*0	*0	*0	4
	ORS00801	*0	*0	*0	*0	4
	ORB00901	73	*59	84	83	1
	ORS00901	0D	0D	0D	0D	0
	ORB00601D	87	71	90	118	0

TABLE 3 - 10, CONTINUED
SURROGATE % RECOVERIES
PESTICIDES/PCB SOIL SAMPLES
NTC-ORLANDO, GROUP 1 SCREENING STUDY
AND BACKGROUND SAMPLING PROGRAM

SDG	SAMPLE ID	TCX1	TCX2	DCB1	DCB2	TOTAL OUT
OR010	ORB01001	92	74	102	100	0
	ORS01001	90	73	103	98	0
	ORB01101	89	74	94	95	0
	ORS01101	94	78	102	101	0
	ORB01201	92	80	110	118	0
	ORB01201MS	74	66	81	90	0
	ORB01201MSD	89	78	93	110	0
	ORS01201	69	*58	90	106	1
	ORB01401	88	74	92	94	0
	ORS01401	88	73	96	100	0
	ORB01501	81	68	87	89	0
	ORS01501	96	82	106	121	0
	ORB01601	93	80	90	144	0
	ORS01601	OD	OD	OD	OD	0
	ORB01001D	96	82	92	122	0
	ORB01401D	86	74	87	98	0
	ORS01201D	88	76	87	105	0
	ORB01301	86	74	94	95	0
	ORS01301	90	76	96	105	0

TCX = TETRACHLORO-M-XYLENE QC LIMITS = 60%-150%
DCB = DECACHLOROBIPHENYL QC LIMITS = 60%-150%

# SAMPLES	% REC IN	%REC OUT	% TOTAL IN
110	426	14	96.8%

TABLE 3 - 11
SURROGATE % RECOVERIES
CHLORINATED HERBICIDES SOIL SAMPLES
NTC-ORLANDO, GROUP 1 SCREENING STUDY
AND BACKGROUND SAMPLING PROGRAM

SDG	SAMPLE ID	DCBA		TOTAL OUT
OR001	09S00100	78		0
	09S00100D	81		0
	09S00200	80		0
	09S00200MS	83		0
	09S00200MSD	82		0
	09S00300	83		0
	09S00400	87		0
	08S00100	85		0
	08S00200	92		0
	08S00300	86		0
	08S00400	86		0
	08S00500	88		0
	08S00600	84		0
	08S00700	76		0
	08S00800	85		0
	09B00101	84		0
	10B00101D	87		0
	08B00101	89		0
	10B00101	84		0
OR008	08B00501	77		0
	08B00601	64		0
	08B00701	78		0
	08B00801	83		0
	08B00801MS	89		0
	08B00801MSD	94		0
	08B00901	85		0
	08B00701D	78		0

TABLE 3 - 11, CONTINUED
SURROGATE % RECOVERIES
CHLORINATED HERBICIDES SOIL SAMPLES
NTC-ORLANDO, GROUP 1 SCREENING STUDY
AND BACKGROUND SAMPLING PROGRAM

SDG	SAMPLE ID	DCBA		TOTAL OUT
OR002	08B00201	94		0
	08B00301	88		0
	08B00401	98		0
	07D00201	96		0
	07D00301	76		0
	07D00101	84		0
	07D00401	72		0
	07D00501	71		0
	07D00601	71		0
	07D01401	77		0
	07D01001	94		0
	07D01201	88		0
	07D01201MS	85		0
	07D01201MSD	93		0
	07D01301	82		0
	07D01201D	87		0
	07D01501	84		0
	06D01201	101		0
	06D01301	104		0
	06D01401	86		0
	06D01201D	90		0
OR009	ORS00101	87		0
	ORB00301	72		0
	ORS00301	83		0
	ORB00201	78		0
	ORS00201	76		0
	ORB00101	87		0
	ORB00401	90		0
	ORS00401	88		0
	ORB00501	90		0
	ORS00501	96		0
	ORB00601	86		0
	ORS00601	82		0
	ORB00701	89		0
	ORB00701MS	80		0
	ORB00701MSD	90		0
	ORS00701	84		0
	ORB00801	76		0
	ORS00801	79		0
	ORB00901	83		0
	ORS00901	94		0
	ORB00601D	81		0

TABLE 3 - 11, CONTINUED
SURROGATE % RECOVERIES
CHLORINATED HERBICIDES SOIL SAMPLES
NTC-ORLANDO, GROUP 1 SCREENING STUDY
AND BACKGROUND SAMPLING PROGRAM

SDG	SAMPLE ID	DCBA		TOTAL OUT
OR010	ORB01001	78		0
	ORS01001	82		0
	ORB01101	92		0
	ORS01101	72		0
	ORB01201	63		0
	ORB01201MS	75		0
	ORB01201MSD	63		0
	ORS01201	88		0
	ORB01401	86		0
	ORS01401	74		0
	ORB01501	95		0
	ORS01501	92		0
	ORB01601	76		0
	ORS01601	78		0
	ORB01001D	70		0
	ORB01401D	68		0
	ORS01201D	72		0
	ORB01301	66		0
	ORS01301	75		0

DCBA - 3,5-DICHLOROBENZOIC ACID QC LIMITS = 31%-128%

# SAMPLES	% REC IN	%REC OUT	% TOTAL IN
88	88	0	100.0%

Guidelines and the SOW allows one (1) surrogate compound per fraction to exceed the QC limits as long as the recovery is above 10%. Therefore, the analytical data did not require qualification.

Eleven (11) PAH samples exhibited surrogate recoveries below the minimum acceptable criteria for accuracy (Table 3-5). The samples were re-extracted well outside of holding time and most exhibited similar recovery results. The RE samples were rejected in favor of the results reported from the original analyses. This indicates that all reported results for the target compounds in the samples exhibiting non-compliant recoveries could be biased low. All positive and non-detect results in samples which exhibited the low recovery results were appropriately qualified as estimated, J/UJ.

The MS/MSD pair of sample 05G00201 exhibited a recovery above the QC limit for endrin in the MSD (Table 2-21). However, based on he assessment of additional QC criteria the analytical data did not require qualification.

The pesticides/PCB TCMX surrogate recoveries were below the QC limits in eighteen (18) samples (Table 3-6). This indicates that all reported results for the target compounds in the field water samples could be biased low. Therefore, all reported positive and non-detect results in samples exhibiting the non-compliant recoveries were appropriately qualified as estimated, J/UJ.

Based on assessment of MS/MSD and surrogate sample accuracy evaluation criteria, the water matrix analytical data was acceptable for each SDG with the noted potential for bias in the PAH and pesticide/PCBs samples. Some of the analytical results may be overestimated or underestimated.

3.2 Soil Matrix

All MS/MSD sample pairs analyzed for volatiles, cyanide, TPH, and TOC exhibited acceptable recoveries of spike compounds (Tables 2-24, 2-29, 2-30, and 2-31).

The surrogate recoveries for volatiles, and chlorinated herbicides were acceptable (Tables 3-8 and 3-11).

The MS/MSD pairs of samples 08B00801 and ORB01201 exhibited recoveries above the QC limit for nitrophenol in the MS (Table 2-25). The MS/MSD pairs of samples 08B00801 and ORB00701 exhibited recoveries above the QC limit for 2,4-dinitrotoluene in the MS and the MSD (Table 2-25). The MS/MSD pair of sample ORB00701 exhibited recoveries above the QC limit for pentachlorophenol in the MS and the MSD (Table 2-25). However, based on he assessment of additional QC criteria the analytical data did not require qualification.

In the semivolatiles surrogate recoveries, one (1) surrogate compound from each fraction was outside the QC limits in two (2) samples and one (1) surrogate compound was outside the QC limits in two (2) samples. However, the National Functional Guidelines and the SOW allows one (1) surrogate compound per fraction to exceed the QC limits as long as the recovery is above 10%. Therefore, the analytical data did not require qualification.

The MS/MSD pairs of samples 09S00200 and ORB01201 exhibited recoveries above the QC limit for 4,4'-DDT in the MS and/or MSD (Table 2-26). However, based on the assessment of additional QC criteria the analytical data did not require qualification.

The pesticides/PCB TCMX surrogate recoveries were below the QC limits in four (4) samples (Table 3-10). This indicates that all reported results for the target compounds in the field water samples could be biased low. Therefore, all reported positive and non-detect results in samples exhibiting the non-compliant recoveries were appropriately qualified as estimated, J/UJ. Two (2) samples exhibited 0% recoveries for both surrogate compounds (Table 3-10, SDG OR009). This indicates that all positive results reported in the samples are underestimated, and all non-detect results are unreliable. Therefore, all positive results reported in samples ORB00801 and ORS00801 were appropriately qualified as estimated, J, and all non-detect results were rejected, R. This constituted the rejection of fifty-six (56) pesticide data points. The completion goal for the fraction was met.

The MS/MSD pair of sample ORB00701 analyzed for herbicides exhibited a recovery below the QC limit for dinoseb in the MSD (Table 2-27). However, based on the assessment of additional QC criteria the analytical data did not require qualification.

The MS of sample 07D01201 analyzed for metals exhibited a recovery for lead which was above the QC limit (Table 2-28). This indicates that reported positive results in associated samples may be overestimated. Therefore, positive results for lead reported in associated samples were appropriately qualified as estimated, J.

Based on assessment of MS/MSD and surrogate sample accuracy evaluation criteria, the soil matrix analytical data was acceptable for each SDG except pesticides, with the noted potential for bias in the metals analyte lead. Some of the analytical results may be overestimated or underestimated. The pesticide/PCB fraction exhibited acceptable completion results although fifty-six (56) data points due to 0% surrogate recovery results in two (2) samples.

4.0 REPRESENTATIVENESS

Representativeness of the environmental sample analytical data was assessed using trip blanks, field blanks, equipment rinseate blanks, and laboratory method blanks. The environmental samples and associated blanks were analyzed for the following target analyte groups:

- Low concentration volatile organic compounds (LCVOCs);
- GC/MS volatile organic compounds (GC/MS VOCs);
- Low concentration semivolatile organic compounds (LCSVOCs);
- GC/MS semivolatile organic compounds (SVOCs);
- polynuclear aromatic hydrocarbons (PAHs);
- pesticides, PCBs,;
- chlorinated herbicides;
- inorganics, cyanide, TPH, and TOC.

The trip blank samples were analyzed for only volatile organic target analytes. Field blanks, equipment rinseate blanks, and laboratory method blanks were analyzed for target analytes in each listed category. The assessment of representativeness is summarized in tabular form for each type of blank, trip blank results are summarized in Tables 4-1 and 4-2, field blank results are summarized in Tables 4-3 through 4-12, equipment rinseate blank results are summarized in Tables 4-13 through 4-23 and method blank results are summarized in Tables 4-24 through 4-32.

If contaminants were detected in a blank, corrective actions were made for the chemical analytical data during data validation by Heartland. The corrective action consisted of amending the laboratory reported results for organic and inorganic target analytes by the criteria. The following describes the Validation Qualifier code in the blank summary tables.

Organic Target Analytes

- CRDL Validation Qualifier. If a sample result for the blank contaminant was less than the CRQL and less than 5 times the blank value (10 times for common laboratory contaminants), the sample result was rejected and amended as estimated non-detected at the CRQL for the target compound.

- U Validation Qualifier. If a sample result for the blank contaminant was greater than the sample CRQL and less than 5 times the blank value (10 times for common laboratory contaminants), the sample result for the blank contaminant was amended as non detect at the concentration reported in the sample results.

- No Action (NA). If a sample result for the blank contaminant was greater than the CRQL and 5 time the blank value (10 times for common laboratory contaminants), the result was not amended.

Inorganic Target Analytes

- U Validation Qualifier. If a sample result for the blank contaminant was less than the IDL and less than 5 times the blank value, the sample result was amended as non-detected.

- UJ Validation Qualifier. If a sample result for the blank contaminant was less than the sample IDL when the absolute value of the negative blank value was greater

TABLE 4 - 1
LOW CONCENTRATION VOLATILE COMPOUNDS DETECTED IN TRIP BLANKS
NTC-ORLANDO, GROUP 1 SCREENING STUDY
AND BACKGROUND SAMPLING PROGRAM

SDG NUMBER	BLANK ID	RELATED ENVIRONMENTAL SAMPLES	CONTAMINANT	TB CONC.	UNITS	VALIDATION QUALIFIER
OR005	OOT00005	10G00101, 02G00601	NO CONTAMINATION FOUND			
	OOT00008	08G00101, 08G00201, 08G00301, 08G00401, 08G00401D, 08G00401MS, 08G00401MSD, 09G00101	NO CONTAMINATION FOUND			
	OOT00011	01G00401, 01G00101, 01G00201, 01G00301, 09G00201, 09G00301, 09G00401, 09G00201D	CHLOROMETHANE	1	ug/L	
OR011	OOT00023	ORG00201, ORG00201D, ORG00201MS, ORG00201MSD, ORG00301, ORG00401, ORG00501, ORG00601, ORG00701, ORG00801, ORG00901, ORG01001	TOLUENE	1	ug/L	
	OOT00024	ORG00201, ORG00201D, ORG00201MS, ORG00201MSD, ORG00301, ORG00401, ORG00501, ORG00601, ORG00701, ORG00801, ORG00901, ORG01001	TOLUENE	1	ug/L	
OR012	OOT00025	03G00101, 03G00201, 03G00301, 03G00401, 05G00101, 05G00201, 05G00201MS, 05G00201MSD, 05G0030 05G00301D, 08G00501, 08G00601, 08G00701, 08G00801, 08G00901, ORG00101, ORG00701D	TOLUENE	0.8	ug/L	

TABLE 4 - 2
GC/MS VOLATILE COMPOUNDS DETECTED IN TRIP BLANKS
NTC-ORLANDO, GROUP 1 SCREENING STUDY
AND BACKGROUND SAMPLING PROGRAM

SDG NUMBER	BLANK ID	RELATED ENVIRONMENTAL SAMPLES	CONTAMINANT	TB CONC.	UNITS	VALIDATION QUALIFIER
OR008	OOT00015	08B00501, 08B00601	NO CONTAMINATION FOUND			
	OOT00016	05B00301, 08B00701, 08B00701D, 08B00801, 08B00801MS, 08B00801MSD, 08B00901	NO CONTAMINATION FOUND			
	OOT00017	03B00101, 03B00201, 03S00101, 03S00201, 05B00101, 05B00201, 03B00301D,	NO CONTAMINATION FOUND			
	OOT00018	03B00301, 03B00401, 03S00301, 03S00401	NO CONTAMINATION FOUND			
	OOT00019	ORB00401, ORB00501, ORS00401, ORS00501	NO CONTAMINATION FOUND			
OR002	OOT00001 OOT00002	08B00301, 08B00401 08B00301, 08B00401	NO CONTAMINATION FOUND			
	OOT00003	01B00101, 07D00101, 07D00201, 07D00301, 07D00401, 07D00501, 07D00601, 07D01401	NO CONTAMINATION FOUND			
	OOT00004	02B00601, 07D01001, 07D01201, 07D01201D, 07D01201MS, 07D01201MS 07D01301, 07D01501, 06D01201, 06D01201D, 06D01301, 06D01401	NO CONTAMINATION FOUND			
OR009	OOT00021	ORB00701, ORB00601, ORB00601D, ORB00701MSD, ORB00701MS, ORB00801 ORB00901, ORS00601, ORS00701, ORS00801, ORS00901	METHYLENE CHLORIDE	17	ug/L	
	OOT00020	ORB00101, ORB00201, ORB00301, ORS00101, ORS00201, ORS00301	METHYLENE CHLORIDE	17	ug/L	
OR010	OOT00022	ORB01001, ORB01001D, ORB01101, ORB01201, ORB01201MS, ORB01201MSD ORB01401, ORB01401D, ORB01501, ORB01601, ORS01001, ORS01101, ORS01201, ORS01301, ORS01201D, ORS01401, ORS01501, ORS01601, ORB01301	NO CONTAMINATION FOUND			

TABLE 4 - 3
LOW CONCENTRATION VOLATILE COMPOUNDS DETECTED IN FIELD BLANKS
NTC-ORLANDO, GROUP 1 SCREENING STUDY
AND BACKGROUND SAMPLING PROGRAM

SDG NUMBER	BLANK ID	RELATED ENVIRONMENTAL SAMPLES	CONTAMINANT	FB CONC.	UNITS	VALIDATION QUALIFIER
OR002	OOR00001	02G00601, 10G00101, 08G00101, 08G00201, 08G00301, 08G00401, 08G00401D, 08G00401MS, 08G00401M 09G00101, 01G00101, 01G00201, 00G00301, 01G00401, 09G00201, 09G00201D, 09G00301, 09G00401, ORG00201, ORG00201D, ORG00201MS, ORG00201MSD, ORG00301, ORG00401, ORG00501, ORG00601, ORG00701, ORG00801, ORG00901, ORG01001, 03G00101, 03G00201, 03G00301, 03G00401, 05G00101, 05G00201, 05G00201MS, 05G00201MSD, 05G0030 05G00301D, 08G00501, 08G00601, 08G00701, 08G00801, 08G00901, ORG00101, ORG00701D	CHLOROMETHANE	0.6	ug/L	
			CARBON DISULFIDE	0.8	ug/L	
			1,2-DICHLOROPROPANE	2	ug/L	

TABLE 4 - 4
LOW CONCENTRATION SEMIVOLATILE COMPOUNDS DETECTED IN FIELD BLANKS
NTC-ORLANDO, GROUP 1 SCREENING STUDY
AND BACKGROUND SAMPLING PROGRAM

SDG NUMBER	BLANK ID	RELATED ENVIRONMENTAL SAMPLES	CONTAMINANT	FB CONC.	UNITS	VALIDATION QUALIFIER
OR005	OOF00001	02G00601, 10G00101, 08G00101, 08G00201, 08G00301, 08G00401, 08G00401D, 08G00401MS, 08G00401MSD, 09G00101, 01G00101, 01G00201, 00G00301, 01G00401, 09G00201, 09G00201D, 09G00301, 09G00401, ORG01001, ORB00201D, 03G00101, 04G00401, 08G00501, ORG00201MSD, ORG00301, ORG00401, ORG00201, ORB00201MS, ORG00201D, ORG00501, ORG00601, ORG00701, ORG00801, ORG00901, ORG01001, 03G00101, 03G00201, 03G00301, 03G00401, 05G00101, 05G00201, 05G00201MS, 05G00201MSD, 05G00301, 05G00301D, 08G00501, 08G00601, 08G00701, 08G00801, 08G00901, ORG00101, ORG00701D	NO CONTAMINATON FOUND			

TABLE 4 - 5
SEMIVOLATILE COMPOUNDS DETECTED IN FIELD BLANKS
NTC-ORLANDO, GROUP 1 SCREENING STUDY
AND BACKGROUND SAMPLING PROGRAM

SDG NUMBER	BLANK ID	RELATED ENVIRONMENTAL SAMPLES	CONTAMINANT	FB CONC.	UNITS	VALIDATION QUALIFIER
OR005	OOF00001	08G00101, 08G00201, 08G00301, 08G00401, 08G00401D, 08G00401MS, 08G00401MSD, 09G00101, 01G00101, 01G00201, 01G00301, 01G00401, 09G00201, 09G00201D, 09G00301, 09G00401, ORG00201, ORG00201D, ORG00201MS, ORG00201MSD, ORG00301, ORG00401, ORG00501, ORG00601, ORG00701, ORG00801, ORG00901, ORG01001, 03G00101, 03G00201, 03G00301, 03G00401, 05G00101, 05G00201, 05G00201MS, 05G00201MSD, 05G0030 05G00301D, 08G00501, 08G00601, 08G00701, 08G00801, 08G00901, ORG00101, ORG00701D, 08B00501, 08B00601, 08B00901, 05B00301, 08B00701, 08B00701D, 08B00801, 08B00801MS, 08B00801MSD 03B00101, 03B00201, 03S00101, 03S00201, 05B00101, 05B00201, 03B00301, 03B00401, 03S00301, 03S00401, 06D01401, ORB00401, ORB00501, ORS00401, ORS00501, 04B00101, ORB00101D, 04B00201, 04B00301, 03B00301D, 08B00301, 08B00401, 01B00101, 07D00101, 07D00201, 07D00301, 07D00401, 07D00501, 07D00601, 07D01401, 02B00601, 07D01001, 07D01201D, 07D01201MS, 07D01201MSD, 07D01301, 07D01501, 06D01201, 06D01201D, 06D01301, ORB00601, ORB00601D, ORB00701, ORB00701MS, ORB00701MSD, ORB0090 ORB00801, ORS00601, ORS00701, ORS00801, ORS00901, ORB00101, ORB00201, ORB00301, ORS00101, ORS00201, ORS00301, ORB01001, ORB01001D, ORB01101, ORB01201, ORB01201MS, ORB01201MS ORB01401, ORB01401D, ORB01501, ORB01601, ORS01001, ORS01201, ORS01201D, ORS01401, ORS01501, ORB01301, ORS01301, ORS01601, 01B00101, 01S00101, 09S00100, 09S00100D, 09S00200, 09S00300, 09S00400, 01B00401, 01B00201, 01B00301, 08S00100, 08S00200, 08S00300, 08S00400, 08S00500, 08S00600, 08S00700, 08S00800, 09B00101, 01B00201, 01B00301, 08S00100, 08S00200, 08S00300, 08S00400, 08S00500, 08S00600, 08S00700, 08S00800, 09B00101, 10B00101D, 08B00201, 08B00101, 10B00101,	NO CONTAMINATION FOUND				

TABLE 4 - 6
POLYNUCLEAR AROMATIC HYDROCARBONS DETECTED IN FIELD BLANKS
NTC-ORLANDO, GROUP 1 SCREENING STUDY
AND BACKGROUND SAMPLING PROGRAM

SDG NUMBER	BLANK ID	RELATED ENVIRONMENTAL SAMPLES	CONTAMINANT	FB CONC.	UNITS	VALIDATION QUALIFIER
OR001	OOF00001	08G00101, 08G00201, 08G00301, 08G00401, 08G00401D, 08G00401MS, 08G00401MSD, 09G00101, 01G00101, 01G00201, 01G00301, 01G00401, 09G00201, 09G00201D, 09G00301, 09G00401, ORG00201, ORG00201D, ORG00201MS, ORG00201MSD, ORG00301, ORG00401, ORG00501, ORG00601, ORG00701, ORG00801, ORG00901, ORG01001, 03G00101, 03G00201, 03G00301, 03G00401, 05G00101, 05G00201, 05G00201MS, 05G00201MSD, 05G0030 05G00301D, 08G00501, 08G00601, 08G00701, 08G00801, 08G00901, ORG00101, ORG00701D	NO CONTAMINATION FOUND			

TABLE 4 - 7
PESTICIDES/PCBs DETECTED IN FIELD BLANKS
NTC-ORLANDO, GROUP 1 SCREENING STUDY
AND BACKGROUND SAMPLING PROGRAM

SDG NUMBER	BLANK ID	RELATED ENVIRONMENTAL SAMPLES	CONTAMINANT	FB CONC.	UNITS	VALIDATION QUALIFIER
OR001	OOF00001	08G00101, 08G00201, 08G00301, 08G00401, 08G00401D, 08G00401MS, 08G00401MSD, 09G00101, 01G00101, 01G00201, 01G00301, 01G00401, 09G00201, 09G00201D, 09G00301, 09G00401, ORG00201, ORG00201D, ORG00201MS, ORG00201MSD, ORG00301, ORG00401, ORG00501, ORG00601, ORG00701, ORG00801, ORG00901, ORG01001, 03G00101, 03G00201, 03G00301, 03G00401, 05G00101, 05G00201, 05G00201MS, 05G00201MSD, 05G0030 05G00301D, 08G00501, 08G00601, 08G00701, 08G00801, 08G00901, ORG00101, ORG00701D, 08B00501, 08B00601, 05B00301, 08B00701, 08B00701D, 08B00801, 08B00801MS, 08B00801MSD 08B00901, 03B00301D, 03B00101, 03B00201, 03S00101, 03S00201, 05B00101, 05B00201, 03B00301, 03B00401, 03S00301, ORB00401, ORB00501, ORS00401, ORS00501, 04B00101, ORB00101D, 04B00201, 04B00301, 08B00301, 08B00401, 01B00101, 07D00101, 07D00201, 07D00301, 07D00401, 07D00501, 07D00601, 07D01401, 02B00601, 07D01001, 07D01201D, 07D01201MS, 07D01201MSD, 07D01301, 07D01501, 06D01201, 06D01201D, 06D01301, 06D01401, 03S00401, ORB00601, ORB00601D, ORB00701, ORB00701MS, ORB00701MSD, ORB0090 ORB00801, ORS00601, ORS00701, ORS00801, ORS00901, ORB00101, ORB00201, ORB00301, ORS00101, ORS00201, ORS00301, ORB01001, ORB01001D, ORB01101, ORB01201, ORB01201MS, ORB01201MS ORB01401, ORB01401D, ORB01501, ORB01601, ORS01001, ORS01201, ORS01201D, ORS01401, ORS01501, ORB01301, ORS01301, ORS01601, 01B00101, 01S00101, 09S00100, 09S00100D, 09S00200, 09S00300, 09S00400, 01B00401, 01B00201, 01B00301, 08S00100, 08S00200, 08S00300, 08S00400, 08S00500, 08S00600, 08S00700, 08S00800, 09B00101, 01B00201, 01B00301, 08S00100, 08S00200, 08S00300, 08S00400, 08S00500, 08S00600, 08S00700, 08S00800, 09B00101, 10B00101D, 08B00201, 08B00101, 10B00101,	NO CONTAMINATION FOUND				

TABLE 4 - 8
CHLORINATED HERBICIDES DETECTED IN FIELD BLANKS
NTC-ORLANDO, GROUP 1 SCREENING STUDY
AND BACKGROUND SAMPLING PROGRAM

SDG NUMBER	BLANK ID	RELATED ENVIRONMENTAL SAMPLES	CONTAMINANT	FB CONC.	UNITS	VALIDATION QUALIFIER
OR001	OOF00001	08G00101, 08G00201, 08G00301, 08G00401, 08G00401D, 08G00401MS, 08G00401MSD, 09G00101, 09G00201, 09G00201D, 09G00301, 09G00401, ORG00201, ORG00201D, ORG00201MS, ORG00201MSD, ORG00301, ORG00401, ORG00501, ORG00601, ORG00701, ORG00801, ORG00901, ORG01001, 08G00501, 08G00601, 08G00701, 08G00801, 08G00901, ORG00101, ORG00701D, 08B00501, 08B00601, 08B00701, 08B00701D, 08B00901, 08B00801, 08B00801MS, 08B00801MSD 03B00101, 03B00201, 03S00101, 03S00201, 05B00101, 05B00201, 03B00301D, ORB00401, ORB00501, ORS00401, ORS00501, 04B00101, ORB00101D, 04B00201, 04B00301, 08B00301, 08B00401, 07D00101, 07D00201, 06D01401, 07D00301, 07D00401, 07D00501, 07D00601, 07D01401, 06D01301, 07D01001, 07D01201D, 07D01201MS, 07D01201MSD, 07D01301, 07D01501, 06D01201, 06D01201D, ORB00601, ORB00601D, ORB00701, ORB00701MS, ORB00701MSD, ORB0090 ORB00801, ORS00601, ORS00701, ORS00801, ORS00901, ORB00101, ORB00201, ORB00301, ORB00401, ORB00501, ORS00401, ORS00501, ORB01001, ORB01001D, ORB01101, ORB01201, ORB01201MS, ORB01201MS ORB01401, ORB01401D, ORB01501, ORB01601, ORS01001, ORS01201, ORS01201D, ORS01401, ORS01501, ORB01301, ORS01301, ORS01601, 09S00100, 09S00400, 09S00100D, 09S00200, 09S00300, 08S00100, 08S00800, 09B00101, 08S00200, 08S00300, 08S00400, 08S00500, 08S00600, 08S00700, 08S00100, 08S00800, 09B00101, 08S00200, 08S00300, 08S00400, 08S00500, 08S00600, 08S00700, 08B00201, 08B00101, 10B00101, 10B00101D	NO CONTAMINATION FOUND			

TABLE 4 - 9
ENDOTHALL DETECTED IN FIELD BLANKS
NTC-ORLANDO, GROUP 1 SCREENING STUDY
AND BACKGROUND SAMPLING PROGRAM

SDG NUMBER	BLANK ID	RELATED ENVIRONMENTAL SAMPLES	CONTAMINANT	FB CONC.	UNITS	VALIDATION QUALIFIER
0R001	00F00001	09G00101, 09G00401,	NO CONTAMINATION FOUND			
		09G00201, 09G00201D, 09G00301,	NO CONTAMINATION FOUND			

TABLE 4 - 10
TOTAL METALS DETECTED IN FIELD BLANKS
NTC-ORLANDO, GROUP 1 SCREENING STUDY
AND BACKGROUND SAMPLING PROGRAM

SDG NUMBER	BLANK ID	RELATED ENVIRONMENTAL SAMPLES	CONTAMINANT	FB CONC.	UNITS	VALIDATION QUALIFIER
OR001	OOF00001	08G00101, 08G00201, 08G00301, 08G00401, 08G00401D, 08G00401MS, 08G00401MD, 09G00101, 01G00101, 01G00201, 01G00301, 01G00401, 09G00201, 09G00201D, 09G00301, 09G00401, ORG00201, ORG00201D, ORG00201MS, ORG00201MD, ORG00301, ORG00401, ORG00501, ORG00601, ORG00701, ORG00801, ORG00901, ORG01001, 03G00101, 03G00201, 03G00301, 03G00401, 05G00101, 05G00201, 05G00201MS, 05G00201MD, 05G00301, 05G00301D, 08G00501, 08G00601, 08G00701, 08G00801, 08G00901, ORG00101, ORG00701D, 08B00501, 08B00601, 05B00301, 08B00701, 08B00701D, 08B00801, 08B00801MS, 08B00801MD, 08B00901, 03B00101, 03B00201, 03S00101, 03S00201, 05B00101, 05B00201, 03B00301D, 03B00301, 03B00401, 03S00301, 03S00401 ORB00401, ORB00501, ORS00401, ORS00501, 04B00101, ORB00101D, 04B00201, 04B00301, 08B00301, 08B00401, 01B00101, 07D00101, 07D00201, 07D00301, 07D00401, 07D00501, 07D00601, 07D01401, 02B00601, 07D01001, 07D01201D, 07D01201MS, 07D01201MD, 07D01301, 07D01501, 06D01201, 06D01201D, 06D01301, 06D01401, ORB00601, ORB00601D, ORB00701, ORB00701MS, ORB00701MD, ORB00901, ORB00801, ORS00601, ORS00701, ORS00801, ORS00901, ORB00101, ORB00201, ORB00301, ORS00101, ORS00201, ORS00301, ORB01001, ORB01001D, ORB01101, ORB01201, ORB01201MS, ORB01201MS ORB01401, ORB01401D, ORB01501, ORB01601, ORS01001, ORS01201, ORS01201D, ORS01401, ORS01501, ORB01301, ORS01301, ORS01601, 01B00101, 01S00101, 09S00100, 09S00100D, 09S00200, 09S00300, 09S00400, 01B00401, 01B00201, 01B00301, 08S00100, 08S00200, 08S00300, 08S00400, 08S00500, 08S00600, 08S00700, 08S00800, 09B00101, 01B00201, 01B00301, 08S00100, 08S00200, 08S00300, 08S00400, 08S00500, 08S00600, 08S00700, 08S00800, 09B00101, 08B00201, 08B00101, 10B00101, 10B00101D	NO CONTAMINATION FOUND			

TABLE 4 - 11
CYANIDE DETECTED IN FIELD BLANKS
NTC-ORLANDO, GROUP 1 SCREENING STUDY
AND BACKGROUND SAMPLING PROGRAM

SDG NUMBER	BLANK ID	RELATED ENVIRONMENTAL SAMPLES	CONTAMINANT	FB CONC.	UNITS	VALIDATION QUALIFIER
OR001	OOR00001	07D00101, 07D00201, 07D00301, 07D00401, 07D00501, 07D00601, 07D01401, 07D01001, 07D01201, 07D01201D, 07D01201MS, 07D01201M 07D01301, 07D01501, 06D01201, 06D01201D, 06D01301, 06D01401	NO CONTAMINATION FOUND			

TABLE 4 - 12
TOTAL PETROLEUM HYDROCARBON DETECTED IN FIELDBLANKS
NTC-ORLANDO, GROUP 1 SCREENING STUDY
AND BACKGROUND SAMPLING PROGRAM

SDG NUMBER	BLANK ID	RELATED ENVIRONMENTAL SAMPLES	CONTAMINANT	FB CONC.	UNITS	VALIDATION QUALIFIER
OR001	OOR00001	07D00101, 07D00201, 07D00301, 07D01001, 07D01201, 06D01201, 07D01201D, 07D01201MS, 07D01201M 06D01201D, 06D01301, 06D01401 04B00101, 04B00101D, 04B00201, 04B00301	NO CONTAMINATION FOUND			

TABLE 4 - 13
LOW CONCENTRATION VOLATILE COMPOUNDS DETECTED IN RINSEATE BLANKS
NTC-ORLANDO, GROUP 1 SCREENING STUDY
AND BACKGROUND SAMPLING PROGRAM

SDG NUMBER	BLANK ID	RELATED ENVIRONMENTAL SAMPLES	CONTAMINANT	RB CONC.	UNITS	VALIDATION QUALIFIER
OR005	OOR00011	02G00601, 10G00101, 08G00101, 08G00201, 08G00301, 08G00401, 08G00401D, 08G00401MS, 08G00401M 09G00101	1,2-DICHLOROPROPANE	1	ug/L	
	OOR00014	01G00101, 01G00201, 00G00301, 01G00401, 09G00201, 09G00201D, 09G00301, 09G00401	1,2-DICHLOROPROPANE	2	ug/L	
OR011	OOR00024	ORG00201, ORG00201D, ORG00201MS, ORG00201MSD, ORG00301, ORG00401, ORG00501, ORG00601, ORG00701, ORG00801, ORG00901, ORG01001, 03G00101, 03G00201, 03G00301, 03G00401, 05G00101, 05G00201, 05G00201MS, 05G00201MSD, 05G0030 05G00301D, 08G00501, 08G00601, 08G00701, 08G00801, 08G00901, ORG00101, ORG00701D	1,2-DICHLOROPROPANE	2	ug/L	

TABLE 4 - 14
GC/MS VOLATILE COMPOUNDS DETECTED IN RINSEATE BLANKS
NTC-ORLANDO, GROUP 1 SCREENING STUDY
AND BACKGROUND SAMPLING PROGRAM

SDG NUMBER	BLANK ID	RELATED ENVIRONMENTAL SAMPLES	CONTAMINANT	RB CONC.	UNITS	VALIDATION QUALIFIER
OR008	OOR00016	08B00501, 08B00601	2-BUTANONE	8	ug/L	
	OOR00017	05B00301, 08B00701, 08B00701D, 08B00801, 08B00801MS, 08B00801MSD 08B00901	NO CONTAMINATION FOUND			
	OOR00018	03B00101, 03B00201, 03S00101, 03S00201, 05B00101, 05B00201, 03B00301D,	NO CONTAMINATION FOUND			
	OOR00019	03B00301, 03B00401, 03S00301, 03S00401	NO CONTAMINATION FOUND			
	OOR00020	ORB00401, ORB00501, ORS00401, ORS00501	NO CONTAMINATION FOUND			
OR002	OOR00006	08B00301, 08B00401, 02B00601, 07D00201, 01B00101, 07D00501, 07D00601, 06D01301, 06D01301RE	METHYLENE CHLORIDE	3	ug/L	CRQL
		07D00101, 07D00301				U
		08B00301, 08B00401	2-BUTANONE	5	ug/L	
	OOR00009	01B00101, 07D00101, 07D00201, 07D00301, 07D00401, 07D00501, 07D00601, 07D01401, 02B00601, 07D01001, 07D01201D, 07D01201MS, 07D01201MSD, 07D01301, 07D01501, 06D01201, 06D01201D, 06D01301, 06D01401	NO CONTAMINATION FOUND			
OR009	OOR00022	ORB00101, ORS00501, ORS00601, ORB00801, ORB00601D, ORB00701MS, ORB00701MSD	ACETONE	14	ug/L	CRQL
		ORB00301, ORS00301				U
		ORB00601, ORB00601D, ORB00701, ORB00701MS, ORB00701MSD, ORB0090 ORB00801, ORS00601, ORS00701, ORS00801, ORS00901	METHYLENE CHLORIDE	13	ug/L	
	OOR00021	ORB00101, ORB00201, ORB00301, ORS00101, ORS00201, ORS00301	METHYLENE CHLORIDE	4	ug/L	
OR010	OOR0023	ORB01001, ORB01401, ORB01001D ORB01201MS	ACETONE	12	ug/L	CRQL
		ORB01501, ORB01601				U
		ORB01301	METHYLENE CHLORIDE	15	ug/L	CRQL
OR001	OOR00001	01B00101, 01S00101, 09S00100, 09S00100D, 09S00200, 09S00300, 09S00400	NO CONTAMINATION FOUND			
	OOR00002	01B00401	NO CONTAMINATION FOUND			
	OOR00003	01B00201, 01B00301, 08S00100, 08S00200, 08S00300, 08S00400, 08S00500, 08S00600, 08S00700, 08S00800, 09B00101	NO CONTAMINATION FOUND			
	OOR00004	01B00201, 01B00301, 08S00100, 08S00200, 08S00300, 08S00400, 08S00500, 08S00600, 08S00700, 08S00800, 09B00101	NO CONTAMINATION FOUND			
	OOR00005	01S00100, 09S00400, 08S00600, 08S00600RE, 08S00700, 08S00800, 01B00201	METHYLENE CHLORIDE	3	ug/L	CRQL

TABLE 4 - 15
LOW CONCENTRATION SEMIVOLATILE COMPOUNDS DETECTED IN RINSEATE BLANKS
NTC-ORLANDO, GROUP 1 SCREENING STUDY
AND BACKGROUND SAMPLING PROGRAM

SDG NUMBER	BLANK ID	RELATED ENVIRONMENTAL SAMPLES	CONTAMINANT	RB CONC.	UNITS	VALIDATION QUALIFIER
OR005	OOR00011	02G00601, 10G00101, 08G00101, 08G00201, 08G00301, 08G00401, 08G00401D, 08G00401MS, 08G00401M 09G00101	NO CONTAMINATON FOUND			
	OOR00014	01G00101, 01G00201, 00G00301, 01G00401, 09G00201, 09G00201D, 09G00301, 09G00401	NO CONTAMINATION FOUND			
OR011	OOR00024	ORG01001, ORB00201D, 03G00101, 04G00401, 08G00501	BIS(2)ETHYLHEXYLPHTHALATE	5	ug/L	
		ORG00201MSD, ORG00301, ORG00401, ORG00201, ORB00201MS, ORG00201D, ORG00501, ORG00601, ORG00701, ORG00801, ORG00901, ORG01001, 03G00101, 03G00201, 03G00301, 03G00401, 05G00101, 05G00201, 05G00201MS, 05G00201MSD, 05G0030 05G00301D, 08G00501, 08G00601, 08G00701, 08G00801, 08G00901, ORG00101, ORG00701D	HEXACHLOROBENZENE	3	ug/L	
			PENTACHLOROPHENOL	5	ug/L	

TABLE 4 - 16
SEMIVOLATILE COMPOUNDS DETECTED IN RINSEATE BLANKS
NTC-ORLANDO, GROUP 1 SCREENING STUDY
AND BACKGROUND SAMPLING PROGRAM

SDG NUMBER	BLANK ID	RELATED ENVIRONMENTAL SAMPLES	CONTAMINANT	RB CONC.	UNITS	VALIDATION QUALIFIER
OR005	OOR00011	08G00101, 08G00201, 08G00301, 08G00401, 08G00401D, 08G00401MS, 08G00401MSD, 09G00101	PHENOL	1	ug/L	
	OOR00014	01G00101, 01G00201, 01G00301, 01G00401, 09G00201, 09G00201D, 09G00301, 09G00401	PHENOL	1	ug/L	
OR011	OOR00024	ORG00201, ORG00201D, ORG00201MS, ORG00201MSD, ORG00301, ORG00401, ORG00501, ORG00601, ORG00701, ORG00801, ORG00901, ORG01001, 03G00101, 03G00201, 03G00301, 03G00401, 05G00101, 05G00201, 05G00201MS, 05G00201MSD, 05G0030 05G00301D, 08G00501, 08G00601, 08G00701, 08G00801, 08G00901, ORG00101, ORG00701D	NO CONTAMINATION FOUND			
OR008	OOR00016	08B00501, 08B00601	NO CONTAMINATION FOUND			
	OOR00017	05B00301, 08B00701, 08B00701D, 08B00801, 08B00801MS, 08B00801MS 08B00901	PHENOL	2	ug/L	
	OOR00018	03B00101, 03B00201, 03S00101, 03S00201, 05B00101, 05B00201, 03B00301D,	NO CONTAMINATION FOUND			
	OOR00019	03B00301, 03B00401, 03S00301, 03S00401	PHENOL	1	ug/L	
	OOR00020	ORB00401, ORB00501, ORS00401, ORS00501, 04B00101, ORB00101D, 04B00201, 04B00301	NO CONTAMINATION FOUND			
OR002	OOR00006	08B00301, 08B00401	NO CONTAMINATION FOUND			
	OOR00009	01B00101, 07D00101, 07D00201, 07D00301, 07D00401, 07D00501, 07D00601, 07D01401, 02B00601, 07D01001, 07D01201D, 07D01201MS, 07D01201MSD, 07D01301, 07D01501, 06D01201, 06D01201D, 06D01301, 06D01401	NO CONTAMINATION FOUND			
OR009	OOR00022	ORB00601, ORB00601D, ORB00701, ORB00701MS, ORB00701MSD, ORB0090 ORB00801, ORS00601, ORS00701, ORS00801, ORS00901	NO CONTAMINATOIN FOUND			
	OOR00021	ORB00101, ORB00201, ORB00301, ORS00101, ORS00201, ORS00301	NO CONTAMINATION FOUND			
OR010	OOR00023	ORB01001, ORB01001D, ORB01101, ORB01201, ORB01201MS, ORB01201MS ORB01401, ORB01401D, ORB01501, ORB01601, ORS01001, ORS01201, ORS01201D, ORS01401, ORS01501, ORB01301, ORS01301, ORS01601	NO CONTAMINATION FOUND			
OR001	OOR00001	01B00101, 01S00101, 09S00100, 09S00100D, 09S00200, 09S00300, 09S00400	NO CONTAMINATION FOUND			
	OOR00002	01B00401	PHENOL	1	ug/L	
	OOR00003	01B00201, 01B00301, 08S00100, 08S00200, 08S00300, 08S00400, 08S00500, 08S00600, 08S00700, 08S00800, 09B00101	NO CONTAMINATION FOUND			
	OOR00004	01B00201, 01B00301, 08S00100, 08S00200, 08S00300, 08S00400, 08S00500, 08S00600, 08S00700, 08S00800, 09B00101	PHENOL	3	ug/L	
	OOR00005	08B00201, 08B00101, 10B00101, 10B00101D	NO CONTAMINATION FOUND			

TABLE 4 - 17
POLYNUCLEAR AROMATIC HYDROCARBONS DETECTED IN RINSEATE BLANKS
NTC-ORLANDO, GROUP 1 SCREENING STUDY
AND BACKGROUND SAMPLING PROGRAM

SDG NUMBER	BLANK ID	RELATED ENVIRONMENTAL SAMPLES	CONTAMINANT	RB CONC.	UNITS	VALIDATION QUALIFIER
OR005	OOR00011	08G00101, 08G00201, 08G00301, 08G00401, 08G00401D, 08G00401MS, 08G00401MSD, 09G00101	NO CONTAMINATION FOUND			
	OOR00014	01G00101, 01G00201, 01G00301, 01G00401, 09G00201, 09G00201D, 09G00301, 09G00401	NO CONTAMINATION FOUND			
OR011	OOR00024	ORG00201, ORG00201D, ORG00201MS, ORG00201MSD, ORG00301, ORG00401, ORG00501, ORG00601, ORG00701, ORG00801, ORG00901, ORG01001, 03G00101, 03G00201, 03G00301, 03G00401, 05G00101, 05G00201, 05G00201MS, 05G00201MSD, 05G0030 05G00301D, 08G00501, 08G00601, 08G00701, 08G00801, 08G00901, ORG00101, ORG00701D	NO CONTAMINATION FOUND			

TABLE 4 - 18
PESTICIDES/PCBs DETECTED IN RINSEATE BLANKS
NTC-ORLANDO, GROUP 1 SCREENING STUDY
AND BACKGROUND SAMPLING PROGRAM

SDG NUMBER	BLANK ID	RELATED ENVIRONMENTAL SAMPLES	CONTAMINANT	RB CONC.	UNITS	VALIDATION QUALIFIER
OR005	OOR00011	08G00101, 08G00201, 08G00301, 08G00401, 08G00401D, 08G00401MS, 08G00401MSD, 09G00101	NO CONTAMINATION FOUND			
	OOR00014	01G00101, 01G00201, 01G00301, 01G00401, 09G00201, 09G00201D, 09G00301, 09G00401	NO CONTAMINATION FOUND			
OR011	OOR00024	ORG00201, ORG00201D, ORG00201MS, ORG00201MSD, ORG00301, ORG00401, ORG00501, ORG00601, ORG00701, ORG00801, ORG00901, ORG01001, 03G00101, 03G00201, 03G00301, 03G00401, 05G00101, 05G00201, 05G00201MS, 05G00201MSD, 05G0030 05G00301D, 08G00501, 08G00601, 08G00701, 08G00801, 08G00901, ORG00101, ORG00701D	NO CONTAMINATION FOUND			
OR008	OOR00016	08B00501, 08B00601	NO CONTAMINATION FOUND			
	OOR00017	05B00301, 08B00701, 08B00701D, 08B00801, 08B00801MS, 08B00801MS 08B00901	NO CONTAMINATION FOUND			
	OOR00018	03B00101, 03B00201, 03S00101, 03S00201, 05B00101, 05B00201, 03B00301D,	NO CONTAMINATION FOUND			
	OOR00019	03B00301, 03B00401, 03S00301, 03S00401	NO CONTAMINATION FOUND			
	OOR00020	ORB00401, ORB00501, ORS00401, ORS00501, 04B00101, ORB00101D, 04B00201, 04B00301	NO CONTAMINATION FOUND			
OR002	OOR00006	08B00301, 08B00401	NO CONTAMINATION FOUND			
	OOR00009	01B00101, 07D00101, 07D00201, 07D00301, 07D00401, 07D00501, 07D00601, 07D01401, 02B00601, 07D01001, 07D01201D, 07D01201MS, 07D01201MSD, 07D01301, 07D01501, 06D01201, 06D01201D, 06D01301, 06D01401	NO CONTAMINATION FOUND			
OR009	OOR00022	ORB00601, ORB00601D, ORB00701, ORB00701MS, ORB00701MSD, ORB0090 ORB00801, ORS00601, ORS00701, ORS00801, ORS00901	NO CONTAMINATOIN FOUND			
	OOR00021	ORB00101, ORB00201, ORB00301, ORS00101, ORS00201, ORS00301	NO CONTAMINATION FOUND			
OR010	OOR00023	ORB01001, ORB01001D, ORB01101, ORB01201, ORB01201MS, ORB01201MS ORB01401, ORB01401D, ORB01501, ORB01601, ORS01001, ORS01201, ORS01201D, ORS01401, ORS01501, ORB01301, ORS01301, ORS01601	NO CONTAMINATION FOUND			
OR001	OOR00001	01B00101, 01S00101, 09S00100, 09S00100D, 09S00200, 09S00300, 09S00400	NO CONTAMINATION FOUND			
	OOR00002	01B00401	NO CONTAMINATION FOUND			
	OOR00003	01B00201, 01B00301, 08S00100, 08S00200, 08S00300, 08S00400, 08S00500, 08S00600, 08S00700, 08S00800, 09B00101	NO CONTAMINATION FOUND			
	OOR00004	01B00201, 01B00301, 08S00100, 08S00200, 08S00300, 08S00400, 08S00500, 08S00600, 08S00700, 08S00800, 09B00101	NO CONTAMINATION FOUND			
	OOR00005	08B00201, 08B00101, 10B00101, 10B00101D	NO CONTAMINATION FOUND			

TABLE 4 - 19
CHLORINATED HERBICIDES DETECTED IN RINSEATE BLANKS
NTC-ORLANDO, GROUP 1 SCREENING STUDY
AND BACKGROUND SAMPLING PROGRAM

SDG NUMBER	BLANK ID	RELATED ENVIRONMENTAL SAMPLES	CONTAMINANT	RB CONC.	UNITS	VALIDATION QUALIFIER
OR005	OOR00011	08G00101, 08G00201, 08G00301, 08G00401, 08G00401D, 08G00401MS, 08G00401MSD, 09G00101, 09G00201, 09G00201D, 09G00301, 09G00401	NO CONTAMINATION FOUND NO CONTAMINATION FOUND			
OR011	OOR00024	ORG00201, ORG00201D, ORG00201MS, ORG00201MSD, ORG00301, ORG00401, ORG00501, ORG00601, ORG00701, ORG00801, ORG00901, ORG01001, 08G00501, 08G00601, 08G00701, 08G00801, 08G00901, ORG00101, ORG00701D	NO CONTAMINATION FOUND			
OR008	OOR00016	08B00501, 08B00601	NO CONTAMINATION FOUND			
	OOR00017	08B00701, 08B00701D, 08B00901 08B00801, 08B00801MS, 08B00801MSD	NO CONTAMINATION FOUND			
	OOR00018	03B00101, 03B00201, 03S00101, 03S00201, 05B00101, 05B00201, 03B00301D,	NO CONTAMINATION FOUND			
	OOR00020	ORB00401, ORB00501, ORS00401, ORS00501, 04B00101, ORB00101D, 04B00201, 04B00301	NO CONTAMINATION FOUND			
OR002	OOR00006	08B00301, 08B00401	NO CONTAMINATION FOUND			
	OOR00009	07D00101, 07D00201, 06D01401, 07D00301, 07D00401, 07D00501, 07D00601, 07D01401, 06D01301, 07D01001, 07D01201D, 07D01201MS, 07D01201MSD, 07D01301, 07D01501, 06D01201, 06D01201D	NO CONTAMINATION FOUND			
OR009	OOR00022	ORB00601, ORB00601D, ORB00701, ORB00701MS, ORB00701MSD, ORB0090 ORB00801, ORS00601, ORS00701, ORS00801, ORS00901	NO CONTAMINATOIN FOUND			
	OOR00021	ORB00101, ORB00201, ORB00301, ORB00401, ORB00501, ORS00401, ORS00501	NO CONTAMINATION FOUND			
OR010	OOR00023	ORB01001, ORB01001D, ORB01101, ORB01201, ORB01201MS, ORB01201MS ORB01401, ORB01401D, ORB01501, ORB01601, ORS01001, ORS01201, ORS01201D, ORS01401, ORS01501, ORB01301, ORS01301, ORS01601	NO CONTAMINATION FOUND			
OR001	OOR00001	09S00100, 09S00400, 09S00100D, 09S00200, 09S00300,	NO CONTAMINATION FOUND			
	OOR00003	08S00100, 08S00800, 09B00101, 08S00200, 08S00300, 08S00400, 08S00500, 08S00600, 08S00700,	NO CONTAMINATION FOUND			
	OOR00004	08S00100, 08S00800, 09B00101, 08S00200, 08S00300, 08S00400, 08S00500, 08S00600, 08S00700,	NO CONTAMINATION FOUND			
	OOR00005	08B00201, 08B00101, 10B00101, 10B00101D	NO CONTAMINATION FOUND			

TABLE 4 - 20
ENDOTHALL DETECTED IN RINSEATE BLANKS
NTC-ORLANDO, GROUP 1 SCREENING STUDY
AND BACKGROUND SAMPLING PROGRAM

SDG NUMBER	BLANK ID	RELATED ENVIRONMENTAL SAMPLES	CONTAMINANT	RB CONC.	UNITS	VALIDATION QUALIFIER
OR005	OOR00011	09G00101	NO CONTAMINATION FOUND			
	OOR00014	09G00201, 09G00201D, 09G00301, 09G00401	NO CONTAMINATION FOUND			

TABLE 4 - 21
TOTAL METALS DETECTED IN RINSEATE BLANKS
NTC-ORLANDO, GROUP 1 SCREENING STUDY
AND BACKGROUND SAMPLING PROGRAM

SDG NUMBER	BLANK ID	RELATED ENVIRONMENTAL SAMPLES	CONTAMINANT	RB CONC.	UNITS	VALIDATION QUALIFIER
OR005	OOR00011	08G00101, 08G00201, 08G00301, 08G00401, 08G00401D, 08G00401MS, 08G00401MSD, 09G00101	NO CONTAMINATION FOUND			
	OOR00014	01G00101, 01G00201, 01G00301, 01G00401, 09G00201, 09G00201D, 09G00301, 09G00401	NO CONTAMINATION FOUND			
OR011	OOR00024	ORG00201, ORB00301, ORB00401, ORG00501; ORG00601, ORG00701, ORG00801, ORG00901, ORG01001, ORG00701D, ORG00101, 03G00101, 03G00201, 03G00301, 03G00401, 05G00101, 05G00201, 05G00301, 05G00301D, 08G00501, 08G00601, 08G00801	ZINC	10	ug/L	U
OR008	OOR00016	08B00501, 08B00601	MANGANESE	0.57	ug/L	
		03B00201				U
	OOR00017	05B00301, 08B00701, 08B00701D, 08B00801, 08B00801MS, 08B00801MSD, 08B00901	POTASSIUM	332	ug/L	
	OOR00018	03B00101, 03B00201, 03S00101, 03S00201, 05B00101, 05B00201, 03B00301D,	BARIUM	0.75	ug/L	
			MANGANESE	1.5	ug/L	
	OOR00019	03B00301, 03B00401, 03S00301,	COPPER	3.9	ug/L	
		03S00401, 04B00101				U
		03B00301, 03B00401, 03S00301, 03S00401	MANGANESE	0.57	ug/L	
	OOR00020	ORB00401, ORB00501, ORS00401, ORS00501, 04B00101, ORB00101D, 04B00201, 04B00301	COPPER	2.2	ug/L	
			LEAD	0.94	ug/L	
OR002	OOR00006	08B00301, 08B00401	NO CONTAMINATION FOUND			
	OOR00009	01B00101, 07D00101, 07D00201, 07D00301, 07D00401, 07D00501, 07D00601, 07D01401, 02B00601, 07D01001, 07D01201D, 07D01201MS, 07D01201MSD, 07D01301, 07D01501, 06D01201, 06D01201D, 06D01301, 06D01401	NO CONTAMINATION FOUND			
OR009	OOR00022	ORB00101, ORB00201, ORS00401, ORS00501, ORS00801	COPPER	4.4	ug/L	U
	OOR00021	ORB00101, ORB00201, ORB00301, ORS00101, ORS00201, ORS00301	NO CONTAMINATION FOUND			
OR010	OOR00023	ORB01001, ORB01001D, ORB01101, ORB01201, ORB01201MS, ORB01201MSD ORB01401, ORB01401D, ORB01501, ORB01601, ORS01001, ORS01201, ORS01201D, ORS01401, ORS01501, ORB01301, ORS01301, ORS01601	IRON	6.8	ug/L	
			MERCURY	0.08	ug/L	
			SODIUM	35.7	ug/L	
			ZINC	2.1	ug/L	
OR001	OOR00001	08S00400	SELENIUM	11.3	ug/L	U
		01B00101, 01S00101, 09S00100, 09S00100D, 09S00200, 09S00300, 09S00400				
	OOR00002	01B00401	IRON	23.2	ug/L	
	OOR00003	01B00301, 09B00101	MANGANESE	1.4	ug/L	U
		08S00100, 08S00300, 09S00100, 09S00400	POTASSIUM	584	ug/L	U
		01B00201, 01B00301, 08S00100, 08S00200, 08S00300, 08S00400, 08S00500, 08S00600, 08S00700, 08S00800, 09B00101	ALUMINUM	85.1	ug/L	
			IRON	15.1	ug/L	
			MAGNESIUM	26.1	ug/L	
	OOR00004	01B00201, 01B00301, 08S00100, 08S00200, 08S00300, 08S00400, 08S00500, 08S00600, 08S00700, 08S00800, 09B00101	ALUMINUM	66.4	ug/L	
			IRON	15.1	ug/L	
	OOR00005	08B00201, 08B00101, 10B00101, 10B00101D	ALUMINUM	81.9	ug/L	
			IRON	16.8	ug/L	
			MAGNESIUM	2.0	ug/L	

TABLE 4 - 22
CYANIDE DETECTED IN RINSEATE BLANKS
NTC-ORLANDO, GROUP 1 SCREENING STUDY
AND BACKGROUND SAMPLING PROGRAM

SDG NUMBER	BLANK ID	RELATED ENVIRONMENTAL SAMPLES	CONTAMINANT	RB CONC.	UNITS	VALIDATION QUALIFIER
OR002	OOR00009	07D00101, 07D00201, 07D00301, 07D00401, 07D00501, 07D00601, 07D01401, 07D01001, 07D01201, 07D01201D, 07D01201MS, 07D01201M 07D01301, 07D01501, 06D01201, 06D01201D, 06D01301, 06D01401	NO CONTAMINATION FOUND			

TABLE 4 - 23
TOTAL PETROLEUM HYDROCARBON DETECTED IN RINSEATE BLANKS
NTC-ORLANDO, GROUP 1 SCREENING STUDY
AND BACKGROUND SAMPLING PROGRAM

SDG NUMBER	BLANK ID	RELATED ENVIRONMENTAL SAMPLES	CONTAMINANT	RB CONC.	UNITS	VALIDATION QUALIFIER
OR002	OOR00009	07D00101, 07D00201, 07D00301, 07D01001, 07D01201, 06D01201, 07D01201D, 07D01201MS, 07D01201M 06D01201D, 06D01301, 06D01401	NO CONTAMINATION FOUND			
OR008	OOR00020	04B00101, 04B00101D, 04B00201, 04B00301	NO CONTAMINATION FOUND			

TABLE 4 - 24
LOW CONCENTRATION VOLATILE COMPOUNDS DETECTED IN METHOD BLANKS
NTC-ORLANDO, GROUP 1 SCREENING STUDY
AND BACKGROUND SAMPLING PROGRAM

SDG NUMBER	BLANK ID	RELATED ENVIRONMENTAL SAMPLES	CONTAMINANT	MB CONC.	UNITS	VALIDATION QUALIFIER
OR005	VBLK9Q	OOT00005, 10G00101, 02G00601	METHYLENE CHLORIDE	0.4	ug/L	CRQL
		STORAGE				U
		OOT00005, STORAGE	ACETONE	3	ug/L	U
	VBLK9S	08G00101	METHYLENE CHLORIDE	0.5	ug/L	CRQL
		08G00101	ACETONE	4	ug/L	
	VBLK9U	08G00201, 09G00101, 08G00301, 08G00401, 08G00401D	METHYLENE CHLORIDE	0.6	ug/L	CRQL
		08G00301	ACETONE	4	ug/L	U
	VBLK9V	OOR00011	METHYLENE CHLORIDE	0.8	ug/L	U
		OOT00008				CRQL
		OOR00011, OOT00008	ACETONE	4	ug/L	
	VBLK9X	OOT00011, 01G00401, 01G00101, 01G00201, 01G00301, 09G00201, 09G00301, 09G00401	METHYLENE CHLORIDE	0.7	ug/L	CRQL
		STORAGE				U
		STORAGE, OOT00011, 09G00401	ACETONE	4	ug/L	U
	VBLK9Z	BLIND SAMPLE, STORAGE	METHYLENE CHLORIDE	0.6	ug/L	CRQL
		OOR00014				U
		STORAGE	ACETONE	4	ug/L	U
OR011	VBLKBE	OOR00024	METHYLENE CHLORIDE	0.7	ug/L	U
		ORG00301, ORG00401, ORG00501, ORG00601, ORG00701, ORG00801, ORG00901				CRQL
	VBLKBJ	ORG01001, OOT00023, OOT00024, ORG00701, ORG00201D, ORG00201	METHYLENE CHLORIDE	0.7	ug/L	CRQL
OR012	VBLKBC	08G00901	METHYLENE CHLORIDE	1	ug/L	CRQL
	VBLKBK	OOT00025, 03G00101, 03G00201, 03G00301, 04G00401, 05G00201, 05G00101, 05G00301, 05G00301D, 08G00501, 08G00601, 08G00701, 08G00801, ORG00101, STORAGE BLANK	METHYLENE CHLORIDE	0.8	ug/L	CRQL
OR002	VBLK9Q	OOF00001, STORAGE	METHYLENE CHLORIDE	0.4	ug/L	U
		OOF00001	ACETONE	3	ug/L	CRQL
		STORAGE				U

TABLE 4 - 25
GC/MS VOLATILE COMPOUNDS DETECTED IN METHOD BLANKS
NTC-ORLANDO, GROUP 1 SCREENING STUDY
AND BACKGROUND SAMPLING PROGRAM

SDG NUMBER	BLANK ID	RELATED ENVIRONMENTAL SAMPLES	CONTAMINANT	MB CONC.	UNITS	VALIDATION QUALIFIER
OR002	VBLKC8	08B00201	NO CONTAMINATION FOUND			
	VBLKC9	OOR00006, OOT00001	NO CONTAMINATION FOUND			
	VBLKCB	08B00301, 08B00401	NO CONTAMINATION FOUND			
	VBLKCC	02B00601, 07D00201, 07D00301, 01B00101, 07D00101, 07D00401, 07D00501, 07D00601, 07D01401, 07D00401RE, 07D00501RE, 07D00601RE, 07D01401RE	2-HEXANONE	3	ug/Kg	
	VBLKCD	OOT00002, OOR00009	NO CONTAMINATION FOUND			
	VBLKCE	OOT00003	NO CONTAMINATION FOUND			
	VBLKCF	OOT00004	2-HEXANONE	4	ug/L	
	VBLKCG	07D01001, 07D01201, 07D01201MS, 07D01201MSD, 07D01301, 07D01201D, 07D01501	NO CONTAMINATION FOUND			
	VBLKCL	06D01201, 06D01301, 06D01401, 06D01201D	NO CONTAMINATION FOUND			
	VBLKCM	06D01301RE	NO CONTAMINATION FOUND			
OR001	VBLKC4	OOR00001	NO CONTAMINATION FOUND			
	VBLKC5	01S00100, 09S00100, 09S00100D, 09S00200, 09S00300, 01B00101, 01B004 09S00100RE, 09S00200MS, 09S00200M	NO CONTAMINATION FOUND			
	VBLKC6	OOR00002	NO CONTAMINATION FOUND			
	VBLKC7	OOR00003, OOR00004	NO CONTAMINATION FOUND			
	VBLKC8	09S00400, 08S00100, 08S00200, 08S003 08S00400, 08S00500, 08S00600, 08S007 08S00800, 01B00201, 01B00301, 09B001 10B00101D, 08B00101, 08S00100RE, 08S00500RE, 08S00600RE	NO CONTAMINATION FOUND			
	VBLKC9	OOR00005	NO CONTAMINATION FOUND			
	VBLKCB	10B00101, 10B00101DRE	NO CONTAMINATION FOUND			
OR008	VBLKD5	OOR00016, OOT00015, OOR00017, OOT00016, OOR00018, OOT00017, OOR00019, OOT00018	NO CONTAMINATION FOUND			

TABLE 4 - 25, CONTINUED
GC/MS VOLATILE COMPOUNDS DETECTED IN METHOD BLANKS
NTC-ORLANDO, GROUP 1 SCREENING STUDY
AND BACKGROUND SAMPLING PROGRAM

SDG NUMBER	BLANK ID	RELATED ENVIRONMENTAL SAMPLES	CONTAMINANT	MB CONC.	UNITS	VALIDATION QUALIFIER
OR008	VBLKD6	08B00501, 08B00601, 05B00301, 08B00701, 08B00801, 08B00801MS, 08B00801MSD	NO CONTAMINATION FOUND			
	VBLKD7	08B00901, 03S00101, 03S00201, 03B001 03B00201, 05B00101, 05B00201, 03S004 03B00301D, 03B00301, 03B00401	NO CONTAMINATION FOUND			
	VBLKD8	08B00701D, 03S00301	NO CONTAMINATION FOUND			
	VBLKDB	OOR00020, OOT00019	NO CONTAMINATION FOUND			
OR009	VBLKD8	ORS00101, ORB00301, ORS00301, ORB00201, ORS00201, ORB00101	NO CONTAMINATION FOUND			
	VBLKD9	ORB00401, ORS00401, ORB00501, ORS00501, ORB00601, ORS00601	NO CONTAMINATION FOUND			
	VBLKDA	ORB00701, ORB00701MS, ORB00701MSD, ORS00701, ORB00801, ORS00801, ORB00901, ORS00901, ORB00601D	NO CONTAMINATION FOUND			
	VBLKDB	OOR00021, OOT00020, OOR00022, OOT00021	NO CONTAMINATION FOUND			
OR010	VBLKDB	OOR00023	NO CONTAMINATION FOUND			
	VBLKDC	ORB01001, ORS01001, ORB01101, ORS01101, ORB01201, ORB01201MS, ORB01201MSD, ORS01201, ORB01401, ORS01401, ORB01501, ORS01501, ORB01601, ORS01601, ORB01001D, ORB01401D, ORS01201D	NO CONTAMINATION FOUND			
	VBLKDD	OOT00022	NO CONTAMINATION FOUND			
	VBLKDH	ORB01301, ORS01301	NO CONTAMINATION FOUND			

TABLE 4 - 26
LOW CONCENTRATION SEMIVOLATILE COMPOUNDS DETECTED IN METHOD BLANKS
NTC-ORLANDO, GROUP 1 SCREENING STUDY
AND BACKGROUND SAMPLING PROGRAM

SDG NUMBER	BLANK ID	RELATED ENVIRONMENTAL SAMPLES	CONTAMINANT	MB CONC.	UNITS	VALIDATION QUALIFIER
OR005	SBLKMQ	OOF00001	NO CONTAMINATION FOUND			
	SBLKMP	10G00101, 02G00601	NO CONTAMINATION FOUND			
	SBLKMN	09G00101, 08G00101, 08G00201, 08G00301, 08G00401, 08G00401D, OOR00011	NO CONTAMINATION FOUND			
	SBLKMR	01G00101, 01G00201, 01G00301, 01G00401, 09G00201, 09G00301, BLIND SAMPLE, OOR00014	NO CONTAMINATION FOUND			
	SBLKNO	09G00401	NO CONTAMINATION FOUND			
OR011	SBLKQ9	ORG00201, ORG00201MS, ORG00201MSD ORG00301, ORG00401, ORG00501, ORG00601, ORG00701, ORG00801, ORG01001, ORG00701D, ORG00201D, OOR00024, ORG00901	NO CONTAMINATION FOUND			
OR012	SBLKQG	03G00101, 03G00201, 03G00301, 04G00401, 05G00101, 05G00201MS, 05G00201MSD, 05G00301, 08G00501, 08G00601, 08G00701	NO CONTAMINATION FOUND			
	SBLKQH	05G00201, 08G00801, 08G00901, 05G00301D	NO CONTAMINATION FOUND			
	SBLKQJ	ORG00101	NO CONTAMINATION FOUND			

TABLE 4 - 27
GC/MS SEMIVOLATILE COMPOUNDS DETECTED IN METHOD BLANKS
NTC-ORLANDO, GROUP 1 SCREENING STUDY
AND BACKGROUND SAMPLING PROGRAM

SDG NUMBER	BLANK ID	RELATED ENVIRONMENTAL SAMPLES	CONTAMINANT	MB CONC.	UNITS	VALIDATION QUALIFIER
OR001	SBLKM7	09S00100, 09S00100D, 09S00200MS, 09S00200MSD	NO CONTAMINATION FOUND			
	SBLKMA	01S00100, 09S00200, 09S00300, 09S00400, 01B00101, 01B00401	NO CONTAMINATION FOUND			
	SBLKMD	08S00100, 08S00200, 08S00300, 08S00400, 08S00500, 08S00600, 08S00700, 08S00800, 01B00201, 01B00301, 09B00101	NO CONTAMINATION FOUND			
	SBLKME	10B00101, 10B00101D	NO CONTAMINATION FOUND			
	SBLKMF	OOR00005	NO CONTAMINATION FOUND			
	SBLKMH	OOR00001, OOF00001, OOR00002	NO CONTAMINATION FOUND			
	SBLKMJ	08B00101	NO CONTAMINATION FOUND			
	SBLKMK	OOR00003, OOR00004	NO CONTAMINATION FOUND			
OR002	SBLKMF	OOR00006	NO CONTAMINATION FOUND			
	SBLKMJ	08B00301, 08B00401, 08B00201	NO CONTAMINATION FOUND			
	SBLKML	OOR00009	NO CONTAMINATION FOUND			
	SBLKMW	07D00101, 07D00201, 07D00301, 01B00101, 07D00401, 07D00501, 07D01401	NO CONTAMINATION FOUND			
	SBLKN2	07D00601	NO CONTAMINATION FOUND			
	SBLKMY	07D01001, 07D01201, 07D01201MS, 07D01201MSD, 07D01301, 07D01501, 02B00601, 07D01201D	NO CONTAMINATION FOUND			
	SBLKMX	06D01201, 06D01301, 06D01401, 06D01201D	NO CONTAMINATION FOUND			
OR005	SBLKMM	02G00601	NO CONTAMINATION FOUND			
	SBLKMS	10G00101	NO CONTAMINATION FOUND			
	SBLKNB	09G00101, 08G00101, 08G00201, 08G00301, 08G00401MS, 08G00401MSD, 08G00401D, OOR00011	NO CONTAMINATION FOUND			
	SBLKNW	08G00401	NO CONTAMINATION FOUND			
	SBLKNC	01G00101, 01G00201, 01G00301, 01G00401	NO CONTAMINATION FOUND			
	SBLKND	09G00201, 09G00301, 09G00401, BLIND SAMPLE, OOR00014	NO CONTAMINATION FOUND			
OR008	SBLKP1	OOR00016, OOR00018, OOR00019, OOR00017	NO CONTAMINATION FOUND			
	SBLKP2	08B00501, 08B00701, 08B00801, 08B00801MS, 08B00801MSD, 08B00901, 08B00701D, 08B00601, 05B00301	NO CONTAMINATION FOUND			
	SBLKP4	03S00101, 03S00201, 03B00101, 03B00201, 05B00101, 05B00201	DI-N-BUTYLPHTHALATE	540	ug/Kg	U
	SBLKP7	03S00301, 03S00401, 03S00301D, 03B00301, 03B00401	DI-N-BUTYLPHTHALATE	800	ug/Kg	U
	SBLKP8	04B00101, 04B00201, 04B00301	NO CONTAMINATION FOUND			
	SBLKP9	OOR00020	NO CONTAMINATION FOUND			

TABLE 4 - 27, CONTINUED
GC/MS SEMIVOLATILE COMPOUNDS DETECTED IN METHOD BLANKS
NTC-ORLANDO, GROUP 1 SCREENING STUDY
AND BACKGROUND SAMPLING PROGRAM

SDG NUMBER	BLANK ID	RELATED ENVIRONMENTAL SAMPLES	CONTAMINANT	MB CONC.	UNITS	VALIDATION QUALIFIER
OR009	SBLKP5	OOR00021	NO CONTAMINATION FOUND			
	SBLKP8	ORB00401, ORS00401, ORB00501, ORS00501	NO CONTAMINATION FOUND			
	SBLKP9	OOR00022	NO CONTAMINATION FOUND			
	SBLKPR	ORB00101, ORS00101, ORB00301, ORS00301, ORB00201, ORS00201	NO CONTAMINATION FOUND			
	SBLKPT	ORB00601, ORS00601, ORB00701	DI-N-BUTYLPHTHALATE	3400	ug/Kg	U
OR010	SBLKP9	OOR00023	NO CONTAMINATION FOUND			
	SBLKPY	ORB01001, ORS01001, ORB01101, ORS01101, ORB01201, ORB01201MS, ORB01201MSD, ORS01201, ORB01401, ORS01401, ORB01501, ORS01501, ORB01601, ORS01601, ORB01001D, ORS01601DL, ORB01401D, ORS01201D	NO CONTAMINATION FOUND			
	SBLKQ1	ORB01301, ORS01301	NO CONTAMINATION FOUND			
OR011	SBLKQ3	ORG00201, ORG00201MS, ORG00201MSD ORG00401, ORG00601, ORG00701, ORG00801, ORG00901, ORG01001, ORG00701D, ORG00201D, OOR00024, ORG00301, ORG00501	NO CONTAMINATION FOUND			
OR012	SBLKQ4	03G00101, 03G00201, 03G00301, 03G00401, 05G00101, 05G00201MS, 05G00201MSD, 05G00301, 08G00501, 08G00601, 08G00701	NO CONTAMINATION FOUND			
	SBLKQ5	08G00801, 08G00901, 05G00301D, 05G00201	NO CONTAMINATION FOUND			
	SBLK16	ORG00101	NO CONTAMINATION FOUND			

TABLE 4 - 28
POLYNUCLEAR AROMATIC HYDROCARBONS DETECTED IN METHOD BLANKS
NTC-ORLANDO, GROUP 1 SCREENING STUDY
AND BACKGROUND SAMPLING PROGRAM

SDG NUMBER	BLANK ID	RELATED ENVIRONMENTAL SAMPLES	CONTAMINANT	MB CONC.	UNITS	VALIDATION QUALIFIER
OR001	NWB10831	OOF00001	NO CONTAMINATION FOUND			
OR005	NWB10921	10G00101, 02G00601, 09G00101, 08G00101, 08G00201, 08G00301, 08G00401, 08G00401D, OOR00011, 08G00401MS, 08G00401MSD	NO CONTAMINATION FOUND			
	NWB20926	01G00101, 01G00201, 01G00301, 01G00401, 09G00201, 09G00301, 09G00401, BLIND SAMPLE, OOR00014	NO CONTAMINATION FOUND			
	NWB11017	10G00101RE, 02G00601RE, 09G00101RE, 08G00101RE, 08G00201RE, 08G00301RE, 08G00401RE, 08G00401DRE, OOR00011R 08G00401MSRE, 08G00401MSDRE, 01G00201RE	NO CONTAMINATION FOUND			
OR011	NWB11115	ORG00201, ORG00201MS, ORG00201MSD ORG00401, ORG00601, ORG00701, ORG00801, ORG00901, ORG01001, ORG00701D, ORG00201D, OOR00024, ORG00301, ORG00501	NO CONTAMINATION FOUND			
OR012	NWB11116	03G00101, 03G00201, 03G00301, 03G00401, 05G00101, 05G00201, 05G00 08G00501, 08G00601, 08G00701, 08G00 08G00901, 05G00301D, ORG00101, 05G00201MS, 05G00201MSD	NO CONTAMINATION FOUND			
	NWB11201	08G00701RE, 08G00801RE	NO CONTAMINATION FOUND			

TABLE 4 - 29
PESTICIDES/PCBs DETECTED IN METHOD BLANKS
NTC-ORLANDO, GROUP 1 SCREENING STUDY
AND BACKGROUND SAMPLING PROGRAM

SDG NUMBER	BLANK ID	RELATED ENVIRONMENTAL SAMPLES	CONTAMINANT	MB CONC.	UNITS	VALIDATION QUALIFIER
OR001	PBLK01	OOF00001, OOR00001, OOR00002	NO CONTAMINATION FOUND			
	PBLK02	09S00201, 01B00101, 01B00401	NO CONTAMINATION FOUND			
	PBLK02	OOR00003, OOR00004	NO CONTAMINATION FOUND			
	PBLK01	01B00201, 01B00301, 08S00100, 08S0020 08S00300, 08S00400, 08S00500, 08S0060 08S00700, 08S00800, 09B00101	NO CONTAMINATION FOUND			
	PBLK06	OOR00005	NO CONTAMINATION FOUND			
	PBLK07	01S00100, 08B00101, 10B00101, 10B0010	NO CONTAMINATION FOUND			
	PBLK31	09S00100, 09S00100D, 09S00300, 09S00400, 09S00200MS, 09S00200MSD	NO CONTAMINATION FOUND			
OR002	PBLK06	OOR00006	NO CONTAMINATION FOUND			
	PBLK07	08B00301, 08B00401, 08B00201	NO CONTAMINATION FOUND			
	PBLK13	OOR00009	NO CONTAMINATION FOUND			
	PBLK14	01B00101, 07D00101, 07D00201, 07D00301, 07D00401, 07D00501, 07D006 07D01401	NO CONTAMINATION FOUND			
	PBLK15	02B00601, 07D01001, 07D01201, 07D01201D, 07D01301, 07D01501, 07D01201MS, 07D01201MSD	NO CONTAMINATION FOUND			
	PBLK26	06D01201, 06D01201D, 06D01301, 06D01401	NO CONTAMINATION FOUND			
OR005	PBLK26	OOR00014, 01G00101, 01G00201, 01G003 01G00401, 09G00201, 09G00301, BLINDSAMPLE	NO CONTAMINATION FOUND			
	PBLK27	09G00401	NO CONTAMINATION FOUND			
	PBLK22	OOR00011, 08G00101, 08G00201, 08G003 08G00401, 08G00401D, 09G00101, 08G00401MS, 08G00401MSD	NO CONTAMINATION FOUND			
	PBLK19	02G00601, 10G00101	NO CONTAMINATION FOUND			
OR008	PBLK01	OOR00016	NO CONTAMINATION FOUND			
	PBLK02	08B00501, 08B00601	NO CONTAMINATION FOUND			
	PBLK21	OOR00017	NO CONTAMINATION FOUND			
	PBLK27	05B00301, 08B00701, 08B00701D, 08B00801, 08B00901, 08B00801MS, 08B00801MSD	NO CONTAMINATION FOUND			
	PBLK05	03B00301D, 03B00101, 03B00201, 03B00301, 03B00401, 03S00101, 03S00201, 03S00301, 03S00401, 05B00101, 05B00201	NO CONTAMINATION FOUND			
	PBLK03	OOR00020	NO CONTAMINATION FOUND			
	PBLK25	OOR00018, OOR00019	NO CONTAMINATION FOUND			
	PBLK04	04B00101, 04B00201, 04B00301	NO CONTAMINATION FOUND			

TABLE 4 - 29, CONTINUED
PESTICIDES/PCBs DETECTED IN METHOD BLANKS
NTC-ORLANDO, GROUP 1 SCREENING STUDY
AND BACKGROUND SAMPLING PROGRAM

SDG NUMBER	BLANK ID	RELATED ENVIRONMENTAL SAMPLES	CONTAMINANT	MB CONC.	UNITS	VALIDATION QUALIFIER
OR009	PBLK28	OOR00021	NO CONTAMINATION FOUND			
	PBLK03	ORB00101, ORB00201, ORB00301, ORS00101, ORS00201, ORS00301	NO CONTAMINATION FOUND			
	PBLK02	ORB00601, ORB00601D, ORB00701, ORB00801, ORB00901, ORS00601, ORS00701, ORS00801, ORS00901, ORB00701MS, ORB00701MSD	NO CONTAMINATION FOUND			
	PBLK31	OOR00022	NO CONTAMINATION FOUND			
	PBLK01	ORB00401, ORB00501, ORS00401, ORS00501	NO CONTAMINATION FOUND			
OR010	PBLK02	OOR00023	NO CONTAMINATION FOUND			
	PBLK07	ORB01001, ORS01001, ORB01101, ORS01101, ORB01201, ORB01201MS, ORB01201MSD, ORS01201, ORB01401, ORS01401, ORB01501, ORS01501, ORB01601, ORS01501, ORB01001D, ORB01401D, ORS01201D	NO CONTAMINATION FOUND			
	PBLK18	ORB01301, ORS01301	NO CONTAMINATION FOUND			
OR011	PBLK14	ORG00201, ORG00201D, ORG00301, ORG00401, ORG00501, ORG00901, ORG01001	NO CONTAMINATION FOUND			
	PBLK15	OOR00024, ORG00601, ORG00701, ORG00701D, ORG00801, ORG00201MS, ORG00201MSD	NO CONTAMINATION FOUND			
OR012	PBLK16	03G00101, 03G00201, 03G00301, 03G004 05G00101, 05G00201, 05G00301, 05G00301D, 08G00501, 08G00601, 08G00701, 08G00801, 08G00901, ORG00101, 05G00201MS, 05G00201MSD	NO CONTAMINATION FOUND			

TABLE 4 - 30
CHLORINATED HERBICIDES DETECTED IN METHOD BLANKS
NTC-ORLANDO, GROUP 1 SCREENING STUDY
AND BACKGROUND SAMPLING PROGRAM

SDG NUMBER	BLANK ID	RELATED ENVIRONMENTAL SAMPLES	CONTAMINANT	MB CONC.	UNITS	VALIDATION QUALIFIER
OR001	W0831481	OOF00001, OOR00001	NO CONTAMINATION FOUND			
	W0906481	OOR00003, OOR00004	NO CONTAMINATION FOUND			
	S0912481	08S00100, 08S00200, 09B00101, 08S00300, 08S00400, 08S00500, 08S0060 08S00700, 08S00800	NO CONTAMINATION FOUND			
	S0913481	08B00101, 10B00101, 10B00101D	NO CONTAMINATION FOUND			
	S098481	09S00100, 09S00100D, 09S00300, 09S00 09S00400, 09S00200MS, 09S00200MSD	NO CONTAMINATION FOUND			
OR002	W0906481	OOR00006	NO CONTAMINATION FOUND			
	S0913481	08B00201, 08B00301, 08B00401	NO CONTAMINATION FOUND			
	W0913481	OOR00009	NO CONTAMINATION FOUND			
	S0915481	07D00101, 07D00201, 07D01401, 07D00301, 07D00401, 07D00501, 07D006	NO CONTAMINATION FOUND			
	S0915482	07D01001, 07D01201, 07D01201D, 07D01301, 07D01501, 07D01201MS, 07D01201MSD	NO CONTAMINATION FOUND			
	S0920482	06D01201, 06D01201D, 06D01301, 06D01401	NO CONTAMINATION FOUND			
OR005	W0926481	09G00201, 09G00301, 09G00401, BLINDSAMPLE	NO CONTAMINATION FOUND			
	W0922481	09G00101, 08G00101, 08G00201, 08G00301, 08G00401, 08G00401MS, 08G00401MSD, 08G00401D, OOR00011	NO CONTAMINATION FOUND			
OR008	W1020181	OOR00016	NO CONTAMINATION FOUND			
	W1024481	OOR00017	NO CONTAMINATION FOUND			
	S1020481 S1024481	08B00501, 08B00601 08B00701, 08B00801, 08B00801MS, 08B00801MSD, 08B00901, 08B00701D	NO CONTAMINATION FOUND			
OR009	W1031481	OOR00021, OOR00022	NO CONTAMINATION FOUND			
	S10314B1	ORB00101, ORB00201, ORB00301, ORS00101, ORS00201, ORS00301 ORB00401, ORS00401, ORB00501, ORS00501	NO CONTAMINATION FOUND			
	S1031482	ORB00601, ORB00601D, ORB00701, ORB00801, ORB00901, ORS00601, ORS00701, ORS00801, ORS00901, ORB00701MS, ORB00701MSD	NO CONTAMINATION FOUND			

TABLE 4 - 30, CONTINUED
CHLORINATED HERBICIDES DETECTED IN METHOD BLANKS
NTC-ORLANDO, GROUP 1 SCREENING STUDY
AND BACKGROUND SAMPLING PROGRAM

SDG NUMBER	BLANK ID	RELATED ENVIRONMENTAL SAMPLES	CONTAMINANT	MB CONC.	UNITS	VALIDATION QUALIFIER
OR010	S1107481	ORB01001, ORS01001, ORB01101, ORS01101, ORB01201, ORB01201MS, ORB01201MSD, ORS01201, ORB01401, ORS01401, ORB01501, ORS01501, ORB01601, ORS01501, ORB01001D, ORB01401D, ORS01201D	NO CONTAMINATION FOUND			
	W1103481	OOR00023	NO CONTAMINATION FOUND			
	S1121481	ORB01301, ORS01301	NO CONTAMINATION FOUND			
OR011	W1114481	ORG00201, ORG00201D, ORG00301, ORG00401, ORG00501, ORG00901, ORG01001, ORG00201MS, ORG00201MSD, OOR00024, ORG00601, ORG00701, ORG00701D, ORG00801	NO CONTAMINATION FOUND			
OR012	W1116481	08G00501, 08G00601, 08G00701, 08G008 08G00901, ORG00101	NO CONTAMINATION FOUND			

TABLE 4 - 31
ENDOTHALL DETECTED IN METHOD BLANKS
NTC-ORLANDO, GROUP 1 SCREENING STUDY
AND BACKGROUND SAMPLING PROGRAM

SDG NUMBER	BLANK ID	RELATED ENVIRONMENTAL SAMPLES	CONTAMINANT	MB CONC.	UNITS	VALIDATION QUALIFIER
OR005	MBLK	09G00101, OOR00011, 09G00201, 09G00301, 09G00401, OOR00014, BLIND SAMPLE	NO CONTAMINATION FOUND			
OR001	MBLK	OOF00001	NO CONTAMINATION FOUND			

TABLE 4 - 32
TOTAL METALS DETECTED IN METHOD BLANKS
NTC-ORLANDO, GROUP 1 SCREENING STUDY
AND BACKGROUND SAMPLING PROGRAM

SDG NUMBER	BLANK ID	RELATED ENVIRONMENTAL SAMPLES	CONTAMINANT	RB CONC.	UNITS	VALIDATION QUALIFIER
OR001	PBS	01S00100, 09S00100, 09S00100D, 09S00200, 09S00200MS, 09S00200MS 09S00300, 09S00400, 01B00101, 01B00401, 08S00100, 08S00200, 08S00300, 08S00400, 08S00500, 08S00600, 08S00700, 08S00800, 01B00201, 01B00301, 09B00101, 10B00101, 10B00101D, 08B00101	ALUMINUM	4.68	mg/Kg	U
			ARSENIC	0.43	mg/Kg	U
			CALCIUM	3.08	mg/Kg	U
			CHROMIUM	0.73	mg/Kg	U
			IRON	12.0	mg/Kg	U
			SELENIUM	0.44	mg/Kg	U
			SODIUM	3.73	mg/Kg	U
			ZINC	1.25	mg/Kg	U
			BERYLLIUM	-0.16	mg/Kg	J/UJ
	PBW	OOR00001, OOF00001, OOR00002, OOR00003, OOR00004, OOR00005	MERCURY	0.78	ug/L	U
			COPPER	2.31	ug/L	U
			CALCIUM	-71.4	ug/L	J/UJ
			SODIUM	-75.4	ug/L	J/UJ
			ZINC	-1.81	ug/L	J/UJ
OR002	PBS	08B00201, 08B00301, 08B00401, 07D00101, 07D00201, 07D00301, 01B00101, 07D00401, 07D00501, 07D00601, 07D01401, 07D01001, 07D01201, 07D01301, 07D01501, 02B00601, 07D01201D, 06D01201, 06D01301, 06D01401, 06D01201D	ALUMINUM	10.3	mg/Kg	U
			ARSENIC	0.43	mg/Kg	U
			CALCIUM	7.79	mg/Kg	U
			CHROMIUM	0.73	mg/Kg	U
			IRON	12.0	mg/Kg	U
			LEAD	0.3	mg/Kg	U
			SODIUM	3.73	mg/Kg	U
			VANADIUM	0.56	mg/Kg	U
			ZINC	1.25	mg/Kg	U
			BARIUM	-0.16	mg/Kg	J/UJ
	PBW	OOR00006, OOR00009	ALUMINUM	75.9	ug/L	U
			CALCIUM	136.0	ug/L	U
			IRON	10.7	ug/L	U
			SODIUM	57.5	ug/L	U
			ZINC	1.89	ug/L	U
			BARIUM	-0.81	ug/L	J/UJ
OR005	PBW	10G00101, 02G00601, 09G00101, 08G00101, 08G00201, 08G00301, 08G00401, 08G00401D, OOR00011, 01G00101, 01G00201, 01G00301, 01G00401, 09G00201, 09G00301, 09G00401, OOR00014	ALUMINUM	27.0	ug/L	U
			CALCIUM	18.0	ug/L	U
			IRON	5.11	ug/L	U
			SODIUM	51.0	ug/L	U
			VANADIUM	3.10	ug/L	U
			ZINC	2.43	ug/L	U
			BERYLLIUM	-0.21	ug/L	J/UJ
OR008	PBS	08B00501, 08B00601, 08B00701, 05B00301, 08B00801, 08B00901, 08B00701D, 03S00101, 03S00201, 03B00101, 03B00201, 05B00101, 05B00201, 03S00301, 03S00401, 03B00301D, 03B00301, 03B00401, 04B00101, 04B00201, 04B00301	ALUMINUM	3.87	mg/Kg	U
			IRON	0.90	mg/Kg	U
			MERCURY	0.02	mg/Kg	U
			SODIUM	10.80	mg/Kg	U
			ZINC	0.29	mg/Kg	U
			CALCIUM	-7.37	mg/Kg	J/UJ
			MAGNESIUM	-8.69	mg/Kg	J/UJ
	PBW	OOR00020, OOR00019, OOR00016, OOR00017, OOR00018	CALCIUM	77.00	ug/L	U
			CHROMIUM	2.13	ug/L	U
			SODIUM	45.40	ug/L	U
			ALUMINUM	-35.2	ug/L	J/UJ
			IRON	-9.09	ug/L	J/UJ
			MAGNESIUM	-27.6	ug/L	J/UJ
			ZINC	-11.5	ug/L	J/UJ

TABLE 4 - 32, CONTINUED
TOTAL METALS DETECTED IN METHOD BLANKS
NTC-ORLANDO, GROUP 1 SCREENING STUDY
AND BACKGROUND SAMPLING PROGRAM

SDG NUMBER	BLANK ID	RELATED ENVIRONMENTAL SAMPLES	CONTAMINANT	RB CONC.	UNITS	VALIDATION QUALIFIER
OR009	PBS	ORB00101, ORS00101, ORB00301, ORS00301, ORB00201, ORS00201, ORB00401, ORS00401, ORB00501, ORS00501, ORB00601, ORS00601, ORB00701, ORS00701, ORB00801, ORS00801, ORB00901, ORS00901, ORB00601D	ALUMINUM	3.60	mg/Kg	U
			BARIUM	0.11	mg/Kg	U
			CALCIUM	-6.59	mg/Kg	J/UJ
	PBW	OOR00021, OOR00022	BARIUM	0.5	ug/L	U
			CALCIUM	-17.6	ug/L	J/UJ
OR010	PBS	ORB01001, ORS01001, ORB01101, ORS01101, ORB01201, ORS01201, ORB01401, ORS01401, ORB01501, ORS01501, ORB01601, ORS01601, ORB01001D, ORB01401D, ORS01201D, ORB01301, ORS01301	CADMIUM	0.81	mg/Kg	U
			COPPER	0.64	mg/Kg	U
			MERCURY	0.01	mg/Kg	U
			MANGANESE	0.17	mg/Kg	U
			BARIUM	-0.14	mg/Kg	J/UJ
			THALLIUM	-0.29	mg/Kg	J/UJ
			CALCIUM	-6.87	mg/Kg	J/UJ
			MAGNESIUM	-7.03	mg/Kg	J/UJ
	PBW	OOR00023	CADMIUM	2.32	ug/L	U
			COPPER	2.84	ug/L	U
			SILVER	2.21	ug/L	U
			THALLIUM	-1.48	ug/L	J/UJ
OR011	PBW	ORG00201, ORG00301, ORG00401, ORG00501, ORG00601, ORG00701, ORG00801, ORG00901, ORG01001, ORG00701D, ORG00201D, OOR00024	CALCIUM	46.7	ug/L	U
			LEAD	-2.15	ug/L	J/UJ
			MERCURY	-0.07	ug/L	J/UJ
			NICKEL	-10.7	ug/L	J/UJ
			SODIUM	-417	ug/L	J/UJ
OR012	PBW	03G00101, 03G00201, 03G00301, 03G00401, 05G00101, 05G00201, 05G00301, 08G00501, 08G00601, 08G00701, 08G00801, 08G00901, 05G00301D, ORG00101	ANTIMONY	1.4	ug/L	U
			ARSENIC	1.51	ug/L	U
			COPPER	2.26	ug/L	U
			MERCURY	0.07	ug/L	U

than the IDL, the sample result for the blank contaminant was amended as estimated non-detected.

- J Validation Qualifier. If a sample result for the blank contaminant was greater than the IDL and less than 10 times the blank value, when the absolute of the negative blank value id greater than the IDL the result was amended as estimated at the laboratory value.

4.1 Trip Blanks

Trip blanks contained deionized water from the laboratory and consisted of samples bottles which were similar to the environmental sample containers. The trip blanks were prepared and packaged at the laboratory prior to the sampling event and traveled with the sample bottles to the site. The trip blank bottles were not opened at the site or anytime prior to laboratory analysis.

Target compounds and analytes detected in the field blank samples consisted of:

- LC Volatiles (Table 4-1)
  - Chloromethane
  - Toluene

- GC/MS Volatiles (Table 4-2)
  - Methylene Chloride

No analytical results required qualification due to the trip blank contamination. Based on the assessment of the trip blank results for representativeness, the analytical data is acceptable.

4.2 Field Blanks

The field blank was prepared at the site and placed in containers that were similar to those used for the environmental samples. The field blank sample was a sample of deionized water from a DI unit taken at the beginning of the sampling program. Low concentration semivolatiles, semivolatiles, polynuclear aromatic hydrocarbons, pesticide/PCBs, herbicides, endothall, metals, cyanide, and TPH target compounds were not detected in the field blank samples (Tables 4-4, 4-5, 4-6, 4-7, 4-8, 4-9, 4-10, and 4-11). Target compounds and analytes detected in the field blank samples consisted of:

- LC Volatiles (Table 4-3)
  - Chloromethane
  - Carbon disulfide
  - 1,2-dichloropropane

The detected volatiles compounds were detected in the low concentration method which has low CRQLs. The results were at the CRQL or slightly above the CRQLs for the low concentration method. None of the sample data required qualification due to the field blank contamination.

Target analytes were detected in some of the field blanks. None of the analytical data required qualification. Based on assessment of field blanks for representativeness the analytical data was acceptable for the SDG.

4.3 Equipment Rinseate Blanks

The equipment rinseate blank was prepared by rinsing sampling equipment with deionized water from a field DI unit. A sample of this water was collected and placed in sample containers similar to those used for the environmental samples. Polynuclear aromatic hydrocarbons, pesticide/PCBs, herbicides, endothall, cyanide, and TPH target compounds were not detected in the rinseate blank samples (Tables 4-17, 4-18, 4-19, 4-20, 4-22, and 4-23). Target analytes detected in the equipment rinseate blank samples consisted of:

- LC Volatiles (Table 4-13)
  - 1,2-dichloropropane
- GC/MS Volatiles (Table 4-14)
  - 2-butanone
  - Acetone
  - Methylene chloride
- LC Semivolatiles (Table 4-15)
  - Bis(2-ethylhexyl)phthalate
  - Hexachlorobenzene
  - Pentachlorophenol
- Semivolatiles (Table 4-16)
  - Phenol
- Metals (Table 4-20)
  - manganese
  - zinc
  - potassium
  - barium
  - copper
  - lead
  - selenium
  - mercury
  - iron
  - aluminum
  - sodium

The detected acetone, 2-butanone, methylene chloride, and bis(2-ethylhexyl)phthalate are common laboratory contaminants and may be attributed to laboratory contamination. The hexachlorobenzene and pentachlorophenol may be due to carryover in the instrument. The phenol may also be due to carryover. Some of the field samples required qualification. The metals analytes can be attributed to the water source, the water treatment system that was used to make the deionized water, or laboratory artifacts. Some of the metals sample data required qualification due to the rinseate blank contamination.

Based on assessment of equipment rinseate blanks for representativeness the analytical data was acceptable for the SDG.

4.4 Method Blanks

The method blanks were samples of deionized water prepared by the laboratory at the time of analysis. Method blanks undergo the same analytical process as the corresponding environmental samples and associated field blanks. The purpose of the method blank is to assess the potential for target compounds and analytes to "contaminate" the sample during analysis. Low concentration semivolatiles, polynuclear aromatic hydrocarbons, pesticides/PCBs, herbicides and endothall target compounds were not detected in method blank samples (Tables 4-26, 4-28, 4-29, 4-30, and 4-31). Target analytes detected in the method blank samples consisted of:

- LC Volatiles (Table 4-24)
  - methylene chloride
  - acetone
- GC/MS Volatiles (Table 4-25)
  - 2-hexanone
- GC/MS Semivolatiles (Table 4-27)
  - di-n-butylphthalate
- Inorganics (Table 4-32)
  - chromium
  - thallium
  - aluminum
  - arsenic
  - calcium
  - iron
  - selenium
  - sodium
  - zinc
  - beryllium
  - mercury
  - copper
  - vanadium

The volatile compounds methylene chloride, acetone, and 2-hexanone and the semivolatile compound di-n-butylphthalate are common laboratory contaminants. The metals analytes can be attributed to the water source, the water treatment system that was used to make the deionized water, or laboratory artifacts. Some of the metals analytes were negative in concentration and can be attributed to instrumentation anomalies.

Because target analytes were detected in some of the method blanks, some of the analytical results were qualified. However, based on assessment of method blanks for representativeness the analytical data was acceptable for each SDG.

4.5 Holding Times

Holding times requirements are utilized in an effort to minimize the degradation or concentration of constituents in a particular matrix over time. The stability of the constituents is determined to the best extent and then a reasonable time limit is imposed under which the samples must be extracted or prepared and then analyzed. The holding times regulations assume that the samples have been properly preserved according to the guidelines, either at the laboratory or in the field. Analytical results from samples with holding time violations are qualified as estimated, J/UJ, due to the potential for compromising the integrity of the samples.

All holding times requirements, extraction and analytical, were met for all samples for which data was deemed usable by validators, for all analytical fractions. Several PAH samples were re-extracted well outside the extraction holding time because of non-compliant surrogate recoveries. The re-extracted samples were rejected in favor of results reported from the original analysis of the samples. The rejections had no impact on the completion results because viable data was obtained for all attempted data points.

5.0 COMPARABILITY

Comparability is qualitative measure designed to express the confidence with which one data set may be compared to another. The analytical samples were collected and transported to the chemical analytical laboratory in accordance with standard procedures and were analyzed in conformance with acceptable USEPA procedures (Refer to Table 5-1 below). The analytical data are reported in standard units (micrograms per liter, micrograms per kilogram, etc.).

The methods used to collect the environmental samples and the methods used to analyze the samples should assure comparability of the analytical data.

TABLE 5-1
USEPA Procedures (CLP or SW-846 Methodologies)

U.S. EPA Method	Description
CLP, OLC01.6	Low Concentration Volatile Organics
CLP, OLM01.8	Volatile Organics
CLP, OLM01.8	Low Concentration Semivolatile Organics
CLP, OLM01.8	Semivolatile Organics
SW-846, Method 8310	Polynuclear Aromatic Hydrocarbons
CLP, OLM01.8, SOW 3/90	Pesticides/PCBs
SW-846, Method 8150	Chlorinated Herbicides
SW-846/GC/ECD/PID	Endothall
CLP, ILMO2.1	Metals
CLP, ILMO2.1	Cyanide
SW-846, 418.1	Total Petroleum Hydrocarbons
SW-846, 9060	Total Organic Carbon

6.0 COMPLETENESS

Completeness is the quantitative measure of the amount of data obtained from a measurement process compared with the amount expected to be obtained under the conditions of measurement. The completeness goal for laboratory analysis for this project was 80 percent useable data. Unusable analytical data are those results reported by the laboratory but rejected during the data validation process. A summary of the completeness goal for NTC Orlando is provided in Table 6-1. For more detailed completeness goal tables, please refer to Appendix C.

TABLE 6-1
COMPLETION GOAL (>80%)

	QC	H20	SOIL	OVERALL
Low Conc. Volatiles	92.8	92.6	NA	92.7
GC/MS Volatiles	99.9	NA	100.0	99.9
Low Conc. Semivolatiles	100.0	100.0	NA	100.0
Semivolatiles	100.0	100.0	100.0	100.0
PAHs	100.0	100.0	NA	100.0
Pesticide/PCBs	100.0	100.0	97.8	99.3
Herbicides	100.0	100.0	100.0	100.0
Endothall	100.0	100.0	NA	100.0
Metals	100.0	100.0	100.0	100.0
Cyanide	100.0	NA	100.0	100.0
TPH	100.0	NA	100.0	100.0
TOC	100.0	NA	100.0	100.0

MATRIX KEY

QC = QC Samples
H2O = Water Samples
Soil = Soil Samples

The analytical data met the 80 percent completeness goal for every fraction. The narrative following describes any extenuating factors involved in the data resolution.

Low Concentration and GC/MS Volatiles, Non-Compliant RRFs. Three (3) LCVOA compounds; acetone, 2-butanone, and 2-hexanone, and one (1) VOA compound; 4-methyl-2-pentanone, did not always meet the initial and continuing calibration criteria of >0.05 for RRF (Relative Response Factor). The RRF values fell below 0.05 in analyses affecting the SDGs associated with this project. All non-detect sample results associated with the initial and continuing calibrations that exhibited any of the three (3) compounds with non-compliant RRFs are rejected, R, (Table A-1). All positive sample results associated with the initial and continuing calibrations that exhibited any of the three (3) compounds with non-compliant RRFs are qualified as estimated, J, (Table A-1). The non-compliant calibrations resulted in the rejection of one hundred and sixty-eight (168) low concentration volatile data points and one (1) volatiles data point. The completeness goal for the fractions were still met.

Non-detect results that were rejected for the compounds may be evaluated by adjusting the CRQL to the concentration of the continuing calibration standard and qualifying the results as not detected at an estimated concentration, UJ. The non-detect qualification at the concentration of

the continuing calibration standard insures that the instrumentation is capable of detecting the compound at a known concentration.

LC VOAs, GC/MS Volatiles/Semivolatiles Target compounds for the volatile, semivolatile, and pesticide/PCBs fractions were qualified because of non-compliant calibrations. Volatile, semivolatile, and pesticide/PCB compounds did not always meet the initial and/or continuing calibration criteria for RSD (Relative Standard Deviation), and %D (Percent Difference). All results qualified for calibration % RSD and % D deficiencies (J/UJ) are considered to be useable. For the compounds in the GC/MS volatile and semivolatile analyses that did not meet calibration criteria, all positive results are qualified as estimated (J) (%Ds >25%) and all non detect results are qualified as estimated (UJ) (>50% D <90%) due to calibration deficiencies.

Serial Dilutions Some metals data was qualified as estimated, J, because the analytes calcium, magnesium, sodium, and iron did not always meet the QC criteria. All data qualified for serial dilution deficiencies is considered usable.

Graphite Furnace MSAs Some metals data was qualified as estimated, J, or J/UJ because the analytes antimony, arsenic, lead, thallium and selenium did not always meet the QC criteria. All data qualified for serial dilution deficiencies is considered usable.

7.0 PARCC SUMMARY

The purpose of evaluating the quality of the analytical data using the PARCC criteria was to address the qualification of the data in regards to evaluation of the presence, magnitude and characteristics of hazardous substances at NCBC Gulfport. Overall, the chemical analytical data are acceptable and exceeded the completion goal of 85 percent for all fractions except cyanide. Tables 7-1 through 7-3 provides a tabulation of the assessment of PARCC criteria each SDG for water samples, soil samples, and quality control samples, respectively.

7.1 Water Samples

One hundred and six (106) low concentration volatile data points were rejected due to initial and/or continuing calibration standards which did not meet QC criteria. The completion goal was met.

7.2 Soil Samples

Fifty-six (56) pesticide/PCB data points were rejected due to 0% surrogate recoveries in two (2) field samples. The completion goal was met.

7.3 QC Samples

Fifty-two (52) low concentration volatile data points were rejected due to initial and/or continuing calibration standards which did not meet QC criteria. The completion goal was met. One (1) volatile data points were rejected due to initial and/or continuing calibration standards which did not meet QC criteria. The completion goal was met.

TABLE 7 - 1
PARCC CRITERIA SUMMARY
WATER SAMPLES
NTC-ORLANDO, GROUP 1 SCREENING STUDY
AND BACKGROUND SAMPLING PROGRAM

SDGs	PRECISION	ACCURACY	REPRESENT-ATIVENESS	COMPARABILITY	COMPLETENESS
OR005	ACCEPTABLE	ACCEPTABLE	ACCEPTABLE	ACCEPTABLE	ACCEPTABLE (1) WITH REJECTIONS
OR011	ACCEPTABLE	ACCEPTABLE	ACCEPTABLE	ACCEPTABLE	ACCEPTABLE (1) WITH REJECTIONS
OR012	ACCEPTABLE	ACCEPTABLE	ACCEPTABLE	ACCEPTABLE	ACCEPTABLE (1) WITH REJECTIONS

(1) One hundred and six (106) low concentration volatiles data points were rejected due to initial and/or continuing calibration standards which did not meet QC criteria. The completion goal was met for the fraction.

TABLE 7 - 2
PARCC CRITERIA SUMMARY
SOIL SAMPLES
NTC-ORLANDO, GROUP 1 SCREENING STUDY
AND BACKGROUND SAMPLING PROGRAM

SDGs	PRECISION	ACCURACY	REPRESENT-ATIVENESS	COMPARABILITY	COMPLETENESS
OR002	ACCEPTABLE	ACCEPTABLE	ACCEPTABLE	ACCEPTABLE	ACCEPTABLE
OR008	ACCEPTABLE	ACCEPTABLE	ACCEPTABLE	ACCEPTABLE	ACCEPTABLE
OR009	ACCEPTABLE	ACCEPTABLE (1) WITH REJECTIONS	ACCEPTABLE	ACCEPTABLE	ACCEPTABLE (1) WITH REJECTIONS
OR001	ACCEPTABLE	ACCEPTABLE	ACCEPTABLE	ACCEPTABLE	ACCEPTABLE
OR010	ACCEPTABLE	ACCEPTABLE	ACCEPTABLE	ACCEPTABLE	ACCEPTABLE

(1) Fifty-six (56) pesticide/PCB data points were rejected due to 0% surrogate recoveries in two (2) field samples. The completion goal was met for the fraction.

TABLE 7 - 3
PARCC CRITERIA SUMMARY
QUALITY CONTROL SAMPLES
NTC-ORLANDO, GROUP 1 SCREENING STUDY
AND BACKGROUND SAMPLING PROGRAM

SDGs	PRECISION	ACCURACY	REPRESENT-ATIVENESS	COMPARABILITY	COMPLETENESS
OR005	ACCEPTABLE	ACCEPTABLE	ACCEPTABLE	ACCEPTABLE	ACCEPTABLE (1) WITH REJECTIONS
OR011	ACCEPTABLE	ACCEPTABLE	ACCEPTABLE	ACCEPTABLE	ACCEPTABLE (1) WITH REJECTIONS
OR012	ACCEPTABLE	ACCEPTABLE	ACCEPTABLE	ACCEPTABLE	ACCEPTABLE (1) WITH REJECTIONS
OR002	ACCEPTABLE	ACCEPTABLE	ACCEPTABLE	ACCEPTABLE	ACCEPTABLE
OR008	ACCEPTABLE	ACCEPTABLE	ACCEPTABLE	ACCEPTABLE	ACCEPTABLE
OR009	ACCEPTABLE	ACCEPTABLE	ACCEPTABLE	ACCEPTABLE	ACCEPTABLE (1) WITH REJECTIONS
OR001	ACCEPTABLE	ACCEPTABLE	ACCEPTABLE	ACCEPTABLE	ACCEPTABLE (2) WITH REJECTIONS
OR010	ACCEPTABLE	ACCEPTABLE	ACCEPTABLE	ACCEPTABLE	ACCEPTABLE

(1) Fifty-two (52) low concentration volatiles data points were rejected due to initial and/or continuing calibration standards which did not meet QC criteria. The completion goal was met for the fraction.
(2) One (1) volatiles data points were rejected due to initial and/or continuing calibration standards which did not meet QC criteria. The completion goal was met for the fraction.

REFERENCES

ABB-ES, (ABB Environmental Services, Inc.) 1995. Project Operations Plan for Site Investigations, NTC - Orlando, Orlando, Florida.

ABB Environmental Services, Inc. (ABB-ES), 1991. Quality Assurance Program Plan, Navy CLEAN Program, District I, March.

ABB-ES, 1992. RI/FS Sampling and Analysis plan, Naval Construction Battalion Center, Gulfport, Mississippi, June.

NEESA, 1988., Sampling and Chemical Analysis Quality Assurance Requirements for the Navy Installation Restoration Program, Naval Energy and Environmental Support, 20.2-047B, June 1988.

USEPA, 1989., Risk Assessment Guidance for Superfund Volume I Human Health Manual (Part a), Interim Final, United States Environmental Protection Agency, 1989.

USEPA, 1988b., National Functional Guidelines for Organic Data Review, United States Environmental Protection Agency, July 1988.

USEPA, 1988a., Laboratory Data Validation Functional Guidelines for Evaluating Inorganic Analyses, United States Environmental Protection Agency, July 1988.

USEPA, 1990a., Guidance for Data Usability in Risk Assessment, United States Environmental Protection Agency, EPA 540 G-90/008, October 1990.

USEPA, 1986., Test Methods for Evaluating Solid Waste, Physical/Chemical Methods, SW-846, September 1986.

USEPA, 1990c., Statement of Work for Inorganic Analysis, Multi-Media, Multi-Concentration, United States Environmental Protection Agency Contracts Laboratory Program, Document No. ILM02.1, July 1988.

USEPA, 1990c., Statement of Work for Organics Analysis, Multi-Media, Multi-Concentration, United States Environmental Protection Agency Contracts Laboratory Program, Document No. OLM01.8, June 1992.

USEPA, 1990c., Statement of Work for Organics Analysis, Low Concentration Waters, United States Environmental Protection Agency Contracts Laboratory Program, Document No. OLC01.6, June 1992.

APPENDIX A

CALIBRATION SUMMARY

TABLE A-1
INITIAL AND CONTINUING CALIBRATION
LOW CONCENTRATION VOLATILE ORGANIC COMPOUNDS
NTC-ORLANDO, GROUP 1 SCREENING STUDY
AND BACKGROUND SAMPLING PROGRAM

ICAL = INITIAL CALIBRATION = %RSD	SDG OR005					
CCAL = CONTINUING CALIBRATION = %D	**ICAL1**	**CCAL1**	**CCAL2**	**CCAL3**	**CCAL4**	**CCAL5**
DATE	092094	092194	092294	092394	092694	092795
INSTRUMENT ID	HP1	HP1	HP1	HP1	HP1	HP1
CALIBRATION CRITERIA	RRF	RRF	RRF/%D	RRF/%D	RRF/%D	RRF/%D
ACETONE	0.011	0.012	0.010	0.010	0.010	0.011
2-BUTANONE	0.020	0.021	0.016	0.018	0.017	0.020
2-HEXANONE	0.049		0.042	0.046		
CHLOROMETHANE			34.1	33.2	31.9	35.9
BROMOMETHANE						33.7

SDGS, STANDARDS, AND ASSOCIATED SAMPLES

SDG OR005
ICAL1: OOT00005, 10G00101, 02G00601, STORAGE
CCAL1: 08G00101
CCAL2: 08G00201, 09G00101, 08G00301, 08G00401, 08G00401MS, 08G00401MSD, 08G00401D
CCAL3: OOR00011, OOT00008
CCAL4: STORAGE, OOT00011, 01G00401, 01G00101, 01G00201, 01G00301, 09G00201, 09G00301, 09G00401
CCAL5: BLINDSAMPLE, OOR00014, STORAGE

TABLE A-1, CONTINUED
INITIAL AND CONTINUING CALIBRATION
LOW CONCENTRATION VOLATILE ORGANIC COMPOUNDS
NTC-ORLANDO, GROUP 1 SCREENING STUDY
AND BACKGROUND SAMPLING PROGRAM

ICAL = INITIAL CALIBRATION = %RSD	SDG OR011			SDG OR012		
CCAL = CONTINUING CALIBRATION = %D	**ICAL1**	**CCAL1**	**CCAL2**	**ICAL1**	**CCAL1**	**CCAL2**
DATE	092094	111694	111794	092094	111594	111894
INSTRUMENT ID	HP1	HP1	HP1	HP1	HP1	HP1
CALIBRATION CRITERIA	RRF	RRF	RRF	RRF	RRF	RRF/%D
ACETONE	0.011	0.010	0.009	0.011	0.010	0.007/35.0
2-BUTANONE	0.020	0.017	0.017	0.020	0.017	0.019
2-HEXANONE	0.049		0.048	0.049		

SDGS, STANDARDS, AND ASSOCIATED SAMPLES

SDG ~~OR005~~ OR011
ICAL1: NONE
CCAL1: OOR00024, ORG00301, ORG00401, ORG00501, ORG00601, ORG00701, ORG00801, ORG00901
CCAL2: ORG01001, OOT00023, OOT00024, ORG00701D, ORG00201D, ORG00201MS, ORG00201MSD, ORG00201, STORAGE BLK1, STORAGE BLK2

SDG OR012
ICAL1: NONE
CCAL1: 08G00901
CCAL2: OOT00025, 03G00101, 03G00201, 03G00301, 04G00401, 05G00201, 05G00201MS, 05G00201MSD, 05G00101, 05G00301, 05G00301D, 08G00501, 08G00601, 08G00701, 08G00801, ORG00101, STORAGE BLANK

TABLE A-1, CONTINUED
INITIAL AND CONTINUING CALIBRATION
LOW CONCENTRATION VOLATILE ORGANIC COMPOUNDS
NTC-ORLANDO, GROUP 1 SCREENING STUDY
AND BACKGROUND SAMPLING PROGRAM

ICAL = INITIAL CALIBRATION = %RSD	SDG OR002A
CCAL = CONTINUING CALIBRATION = %D	**ICAL1**
DATE	092094
INSTRUMENT ID	HP1
CALIBRATION CRITERIA	RRF
ACETONE	0.011
2-BUTANONE	0.020
2-HEXANONE	0.049

SDGS, STANDARDS, AND ASSOCIATED SAMPLES

SDG OR002A
ICAL1: OOF00001, STORAGE

TABLE A-2
INITIAL AND CONTINUING CALIBRATION
GC/MS VOLATILE ORGANIC COMPOUNDS
NTC-ORLANDO, GROUP 1 SCREENING STUDY
AND BACKGROUND SAMPLING PROGRAM

ICAL = INITIAL CALIBRATION = %RSD	SDG OR008	SDG OR002		
CCAL = CONTINUING CALIBRATION = %D	CCAL1	CCAL1	CCAL2	CCAL3
DATE	110294	090194	090894	092094
INSTRUMENT ID	FINZ	FINZ	FINZ	FINZ
CALIBRATION CRITERIA	%D	%D	%D	%D
ACETONE	29.9	27.9		
CHLOROMETHANE		37.3		
CHLOROETHANE		26.3		
2-BUTANONE		28.6		31.7
4-METHYL-2-PENTANONE		32.3		39.8
2-HEXANONE		34.0	32.6	41.9
1,1,2,2-TETRACHLOROETHANE		28.1		

SDGS, STANDARDS, AND ASSOCIATED SAMPLES

SDG OR008
CCAL1: OOR00020, OOT00019
SDG OR002
CCAL1: 08B00201
CCAL2: 08B00301, 08B00401
CCAL3: 06D01201, 06D01301, 06D01401, 06D01201D

TABLE A-2, CONTINUED
INITIAL AND CONTINUING CALIBRATION
GC/MS VOLATILE ORGANIC COMPOUNDS
NTC-ORLANDO, GROUP 1 SCREENING STUDY
AND BACKGROUND SAMPLING PROGRAM

ICAL = INITIAL CALIBRATION = %RSD	SDG OR009			SDG OR010	
CCAL = CONTINUING CALIBRATION = %D	CCAL1	CCAL2	CCAL3	CCAL1	CCAL2
DATE	102894	103194	110294	110294	110494
INSTRUMENT ID	FINZ	FINZ	FINZ	FINZ	FINZ
CALIBRATION CRITERIA	%D	%D	%D	%D	%D
ACETONE			29.9	29.9	26.3
4-METHYL-2-PENTANONE		26.6			
2-HEXANONE		27.4			30.1
CARBON DISULFIDE	28.1				

SDGS, STANDARDS, AND ASSOCIATED SAMPLES

SDG OR009
CCAL1: ORB00401, ORB00501, ORB00601, ORS00401, ORS00501, ORS00601
CCAL2: ORB00701, ORB00701MS, ORB00701MSD, ORS00701S, ORB00801, ORB00901, ORB00601D, ORS00801, ORS00901
CCAL3: OOR00021, OOT00020, OOR00022, OOT00021
SDG OR010
CCAL1: OOR00023
CCAL2: ORB01001, ORB01101, ORB01201, ORB01201MS, ORB01201MSD, ORB01401, ORB01501, ORB01601, ORB01001D, ORB01401D, ORS01201D, ORS01002, ORS01101, ORS01201, ORS01401, ORS01501, ORS01601

TABLE A-2, CONTINUED
INITIAL AND CONTINUING CALIBRATION
GC/MS VOLATILE ORGANIC COMPOUNDS
NTC-ORLANDO, GROUP 1 SCREENING STUDY
AND BACKGROUND SAMPLING PROGRAM

ICAL = INITIAL CALIBRATION = %RSD	SDG OR001					
CCAL = CONTINUING CALIBRATION = %D	CCAL1	CCAL2	CCAL3	CCAL4	CCAL5	CCAL6
DATE	082994	083094	083194	090194	090194	090894
INSTRUMENT ID	FINZ	FINZ	FINZ	FINZ	FINZ	FINZ
CALIBRATION CRITERIA	%D	%D	RRF/%D	%D	%D	%D
ACETONE	26.8	37.5	35.2	31.8	27.9	
CHLOROMETHANE		32.9			37.3	
CHLOROETHANE		42.5			26.3	
2-BUTANONE	32.9		36.0	30.8	28.6	
4-METHYL-2-PENTANONE	30.2	43.9	0.047/34.5	0.047/33.9	32.3	
2-HEXANONE	36.9	47.5	37.8	37.3	34.0	32.6
1,1,2,2-TETRACHLOROETHANE					28.1	

SDGS, STANDARDS, AND ASSOCIATED SAMPLES

SDG OR001
CCAL1: OOR00001
CCAL2: 01S00100, 09S00100, 09S00100D, 09S00200, 09S00200MS, 09S00200MSD, 09S00300, 01B00101, 01B00401, 09S00100DRE
CCAL3: OOR00002
CCAL4: OOR00003, OOR00004
CCAL5: 09S00400, 08S00200, 08S00300, 08S00400, 08S00500, 08S00600, 08S00700, 01B00201, 01B00301, 09B00101, 10B00101D, 08B00101, 08S00100RE, 08S00100, 08S00500RE, 08S00600RE

TABLE A-3
INITIAL AND CONTINUING CALIBRATION
SEMIVOLATILE ORGANIC COMPOUNDS
NTC-ORLANDO, GROUP 1 SCREENING STUDY
AND BACKGROUND SAMPLING PROGRAM

ICAL = INITIAL CALIBRATION = %RSD	SDG OR012	SDG OR011		SDG OR005		
CCAL = CONTINUING CALIBRATION = %D	CCAL1	CCAL1	CCAL2	CCAL1	CCAL2	CCAL3
DATE	120994	120694	120794	100294	101694	101994
INSTRUMENT ID	HPX	HPX	HPX	HPW	HPW	HPW
CALIBRATION CRITERIA	%D	%D	%D	%D	%D	%D
HEXACHLOROCYCLOPENTADIENE	45.9			50.6		
2,4-DINITROPHENOL	42.6	27.6			49.4	28.4
DI-N-OCTYLPHTHALATE	27.7					
BENZO(K)FLUORANTHENE	28.2					
2,2'-OXYBIS(1-CHLOROPROPANE)				29.0		
TERPHENYL-D14				29.5		
4-CHLORO-3-METHYLPHENOL				28.5	28.4	
4-NITROPHENOL					41.5	
4-NITROANILINE					35.2	
PENTACHLOROPHENOL					30.2	26.2
2,4,6-TRIBROMOPHENOL					29.3	
2,4-DINITROTOLUENE			25.2			

SDGS, STANDARDS, AND ASSOCIATED SAMPLES

SDG OR012
CCAL1: 08G00801, 08G00901, 05G00301D, 05G00201, ORG00101
SDG OR011
CCAL1: ORG00201, ORG00201MS, ORG00201MSD, ORG00401, ORG00601, ORG00701, ORG00801, ORG00901
CCAL2: ORG00301, ORG00501
SDG OR005
CCAL1: 02G00601
CCAL2: 09G00201, 09G00401, OOR00014, BLINDSAMPLE
CCAL3: 08G00401

TABLE A-3, CONTINUED
INITIAL AND CONTINUING CALIBRATION
SEMIVOLATILE ORGANIC COMPOUNDS
NTC-ORLANDO, GROUP 1 SCREENING STUDY
AND BACKGROUND SAMPLING PROGRAM

ICAL = INITIAL CALIBRATION = %RSD	SDG OR001				SDG OR01	SDG OR009	
CCAL = CONTINUING CALIBRATION = %D	CCAL1	CCAL2	CCAL3	CCAL4	CCAL1	CCAL1	CCAL2
DATE	092894	092994	093094	100294	120294	112194	112294
INSTRUMENT ID	HPW	HPW	HPW	HPW	HPX	HPX	HPX
CALIBRATION CRITERIA	%D	%D	%D	%D	%D	%D	%D
HEXACHLOROCYCLOPENTADIENE			84.0	50.6			
2,4-DINITROPHENOL	37.4		35.8				34.2
HEXACHLOROBUTADIENE			27.5				
HEXACHLOROBENZENE			28.3				
DI-N-OCTYLPHTHALATE	26.0	29.6					
ANTHRACENE							30.1
2,2'-OXYBIS(1-CHLOROPROPANE)				29.0			25.9
4-CHLOROPHENYL-PHENYLETHER				28.5			
4-BROMOPHENYL-PHENYLETHER			27.9				
TERPHENYL-D14	27.9			29.5			
CHRYSENE							27.0
BENZO(B)FLUORANTHENE							29.5
BENZO(G,H,I)PERYLENE						31.5	27.0
PENTACHLOROPHENOL	25.5	27.6			27.6		
2,4,6-TRIBROMOPHENOL			41.4				
PYRENE	33.2						
BUTYLBENZYLPHTHALATE	31.8						
BIS(2-ETHYLHEXYL)PHTHALATE	32.1						27.8
DIBENZO(A,H)ANTHRACENE						29.5	
INDENO(1,2,3-CD)PYRENE						29.0	
CARBAZOLE						25.5	
4-NITROPHENOL						28.7	

SDGS, STANDARDS, AND ASSOCIATED SAMPLES

SDG OR001
CCAL1: 01S00100, 09S00200, 09S00300, 09S00400, 01B00101, 01B00401
CCAL2: 08S00100, 08S00200, 08S00300, 08S00400, 08S00500, 08S00600, 08S00700, 08S00800, 01B00201, 01B00301, 09B00101, 10B00101, 10B00101D
CCAL3: OOR00005, OOR00001, OOF00001, OOR00002, 08B00101
CCAL4: OOR00003, OOR00004
SDG OR010
CCAL1: ORS01601DL, ORB01401D, ORS01201D, ORB01301, ORS01301
SDG OR009
CCAL1: ORB00101, ORS00101, ORB00301, ORS00301, ORB00201, ORS00201
CCAL2: ORB00601, ORS00601, ORB00701, ORB00701MS, ORB00701MSD, ORS00701, ORB00801, ORB00901, ORS00901, ORB00601D

TABLE A-3, CONTINUED
INITIAL AND CONTINUING CALIBRATION
SEMIVOLATILE ORGANIC COMPOUNDS
NTC-ORLANDO, GROUP 1 SCREENING STUDY
AND BACKGROUND SAMPLING PROGRAM

ICAL = INITIAL CALIBRATION = %RSD	SDG OR002			SDG OR008		
CCAL = CONTINUING CALIBRATION = %D	CCAL1	CCAL2	CCAL3	CCAL1	CCAL2	CCAL3
DATE	093094	100294	101194	102694	102794	110294
INSTRUMENT ID	HPW	HPW	HPW	HPX	HPX	HPX
CALIBRATION CRITERIA	%D	%D	%D	%D	%D	%D
HEXACHLOROCYCLOPENTADIENE	84.0	50.6				
2,4-DINITROPHENOL	35.8					29.6
HEXACHLOROBUTADIENE	27.5					
HEXACHLOROBENZENE	28.3					
N-NITROSODI-N-PROPYLAMINE					29.3	
4,6-DINITRO-2-METHYLPHENOL				26.9		
2,2'-OXYBIS(1-CHLOROPROPANE)		29.0			58.6	
4-CHLOROPHENYL-PHENYLETHER		28.6				
4-BROMOPHENYL-PHENYLETHER	27.9					
TERPHENYL-D14		29.5				
BENZO(K)FLUORANTHENE			31.2			
2,4,6-TRIBROMOPHENOL	41.4					
4-NITROPHENOL				29.2	29.0	

SDGS, STANDARDS, AND ASSOCIATED SAMPLES

SDG OR002
CCAL1: OOR00006, 08B00301, 08B00401, 08B00201
CCAL2: OOR00009
CCAL3: 07D01001, 07D01201, 07D01201MS, 07D01201MSD, 07D01301, 07D01601, 02B00601, 07D01201D, 07D00601

SDG OR008
CCAL1: OOR00016, OOR00018, OOR00019, 08B00501, 08B00701, 08B00801, 08B00801MS, 08B00801MSD, 08B00901, 08B00701D
CCAL2: OOR00017, 08B00601, 05B00301
CCAL3: 03S00301, 03S00401, 00B00301D, 03B00301, 03B00401

APPENDIX B

SERIAL DILUTION SUMMARY

TABLE B - 1
WATER SAMPLE SERIAL DILUTION
METALS SUMMARY TABLE
NTC-ORLANDO, GROUP 1 SCREENING STUDY
AND BACKGROUND SAMPLING PROGRAM

SAMPLE 05G00201		SDG OR012
%D = PERCENT DIFFERENCE		%D
METALS ANALYTES	UNITS	
ALUMINUM	ug/L	3.5
ANTIMONY	ug/L	NR
ARSENIC	ug/L	NR
BARIUM	ug/L	4.3
BERYLLIUM	ug/L	NC
CADMIUM	ug/L	NC
CALCIUM	ug/L	1.7
CHROMIUM	ug/L	NC
COBALT	ug/L	NC
COPPER	ug/L	395
IRON	ug/L	3.7
LEAD	ug/L	NR
MAGNESIUM	ug/L	4.1
MANGANESE	ug/L	63.0
NICKEL	ug/L	NC
POTASSIUM	ug/L	100
SELENIUM	ug/L	NR
SILVER	ug/L	NC
VANADIUM	ug/L	NC
ZINC	ug/L	82.6

*** - INDICATES VALUE OUTSIDE QC LIMITS**
NC DENOTES NO CALCULATION DUE TO NON-DETECT RESULTS IN BOTH SAMPLES
NR DENOTES COMPOUND NOT REQUIRED FOR SERIAL DILUTION

CORRESPONDING SDG'S AND ASSOCIATED SAMPLES

OR012: 03G00101, 03G00201, 03G00301, 04G00401, 05G00101, 05G00201, 05G00301, 08G00501, 08G00601, 08G00701, 08G00801, 08G00901, 05G00301D, 0RG00101

ANALYTE	RPD
	WATER
ALL ICP ANALYTES	+/-10%

+/-10% RULE ONLY APPLIES TO RESULTS GREATER THAN 50 TIMES THE IDL
(SOME VALUES ROUNDED TO LIMIT %Ds TO THREE (3) SIGNIFICANT FIGURES)

TABLE B - 1, CONTINUED
WATER SAMPLE SERIAL DILUTION
METALS SUMMARY TABLE
NTC-ORLANDO, GROUP 1 SCREENING STUDY
AND BACKGROUND SAMPLING PROGRAM

SAMPLE ORG00201		SDG OR011
%D = PERCENT DIFFERENCE		%D
METALS ANALYTES	UNITS	
ALUMINUM	ug/L	NC
ANTIMONY	ug/L	NR
ARSENIC	ug/L	NR
BARIUM	ug/L	8.5
BERYLLIUM	ug/L	NC
CADMIUM	ug/L	NC
CALCIUM	ug/L	*38.1
CHROMIUM	ug/L	NC
COBALT	ug/L	NC
COPPER	ug/L	NC
IRON	ug/L	100
LEAD	ug/L	NR
MAGNESIUM	ug/L	*37.4
MANGANESE	ug/L	100
NICKEL	ug/L	NC
POTASSIUM	ug/L	22.7
SELENIUM	ug/L	NR
SILVER	ug/L	NC
VANADIUM	ug/L	19.1
ZINC	ug/L	100

*** - INDICATES VALUE OUTSIDE QC LIMITS**
NC DENOTES NO CALCULATION DUE TO NON-DETECT RESULTS IN BOTH SAMPLES
NR DENOTES COMPOUND NOT REQUIRED FOR SERIAL DILUTION

CORRESPONDING SDG'S AND ASSOCIATED SAMPLES

OR011: ORG00201, ORG00301, ORG00401, ORG00501, ORG00601, ORG00701, ORG00801, ORG00901, ORG01002, ORG00701D, ORG00201D, OOR00024

ANALYTE	RPD
	WATER
ALL ICP ANALYTES	+/-10%

+/-10% RULE ONLY APPLIES TO RESULTS GREATER THAN 50 TIMES THE IDL
(SOME VALUES ROUNDED TO LIMIT %Ds TO THREE (3) SIGNIFICANT FIGURES)

TABLE B - 1, CONTINUED
WATER SAMPLE SERIAL DILUTION
METALS SUMMARY TABLE
NTC-ORLANDO, GROUP 1 SCREENING STUDY
AND BACKGROUND SAMPLING PROGRAM

SAMPLE 08G00401		SDG OR005
%D = PERCENT DIFFERENCE		%D
METALS ANALYTES	UNITS	
ALUMINUM	ug/L	28.8
ANTIMONY	ug/L	NR
ARSENIC	ug/L	NR
BARIUM	ug/L	38.3
BERYLLIUM	ug/L	NC
CADMIUM	ug/L	NC
CALCIUM	ug/L	5.1
CHROMIUM	ug/L	206
COBALT	ug/L	NC
COPPER	ug/L	100
IRON	ug/L	5.7
LEAD	ug/L	NR
MAGNESIUM	ug/L	3.8
MANGANESE	ug/L	10.6
NICKEL	ug/L	NC
POTASSIUM	ug/L	4.3
SELENIUM	ug/L	NR
SILVER	ug/L	NC
THALLIUM	ug/L	NR
VANADIUM	ug/L	100
ZINC	ug/L	100

*** - INDICATES VALUE OUTSIDE QC LIMITS**
NC DENOTES NO CALCULATION DUE TO NON-DETECT RESULTS IN BOTH SAMPLES
NR DENOTES COMPOUND NOT REQUIRED FOR SERIAL DILUTION

CORRESPONDING SDG'S AND ASSOCIATED SAMPLES

OR005: 10G00101, 02G00601, 09G00101, 08G00101, 08G00201, 08G00301, 08G00401, 08G00401D, 00R00011, 01G00101, 01G00201, 01G00301, 01G00401, 09G00201, 09G00301, 09G00401, 00R00014

ANALYTE	RPD
	WATER
ALL ICP ANALYTES	+/-10%

+/-10% RULE ONLY APPLIES TO RESULTS GREATER THAN 50 TIMES THE IDL
(SOME VALUES ROUNDED TO LIMIT %Ds TO THREE (3) SIGNIFICANT FIGURES)

TABLE B-2
SOIL SAMPLE SERIAL DILUTION
METALS SUMMARY TABLE
NTC-ORLANDO, GROUP 1 SCREENING STUDY
AND BACKGROUND SAMPLING PROGRAM

SAMPLE 08B000801		SDG OR008
%D = PERCENT DIFFERENCE		%D
METALS ANALYTES	UNITS	
ALUMINUM	ug/L	100
ANTIMONY	ug/L	NC
ARSENIC	ug/L	NR
BARIUM	ug/L	100
BERYLLIUM	ug/L	NC
CADMIUM	ug/L	NC
CALCIUM	ug/L	17.1
CHROMIUM	ug/L	100
COBALT	ug/L	NC
COPPER	ug/L	NC
IRON	ug/L	4.5
LEAD	ug/L	NR
MAGNESIUM	ug/L	NC
MANGANESE	ug/L	100
NICKEL	ug/L	NC
POTASSIUM	ug/L	NC
SELENIUM	ug/L	NR
SILVER	ug/L	NC
SODIUM	ug/L	271
THALLIUM	ug/L	NR
VANADIUM	ug/L	NC
ZINC	ug/L	100

*** - INDICATES VALUE OUTSIDE QC LIMITS**
NC DENOTES NO CALCULATION DUE TO NON-DETECT RESULTS IN BOTH SAMPLES
NR DENOTES COMPOUND NOT REQUIRED FOR SERIAL DILUTION

CORRESPONDING SDG'S AND ASSOCIATED SAMPLES

OR008: 08B00501, 008B00601, 05B00301, 08B00701, 08B00801, 08B00901, 08B00701D, 03S00101, 03S00201, 03B00101, 03B00201, 05B00101, 05B00201, 03S00301, 03S00401, 00B00301D, 03B00301, 03B00401, 04B00101, 04B00201, 04B00301

ANALYTE	RPD
	SOIL
ALL ICP ANALYTES	+/-10%

+/-10% RULE ONLY APPLIES TO RESULTS GREATER THAN 50 TIMES THE IDL
(SOME VALUES ROUNDED TO LIMIT %Ds TO THREE (3) SIGNIFICANT FIGURES)

TABLE B - 2, CONTINUED
SOIL SAMPLE SERIAL DILUTION
METALS SUMMARY TABLE
NTC-ORLANDO, GROUP 1 SCREENING STUDY
AND BACKGROUND SAMPLING PROGRAM

SAMPLE 07D01201		SDG OR002
%D = PERCENT DIFFERENCE		%D
METALS ANALYTES	UNITS	
ALUMINUM	ug/L	0.9
ANTIMONY	ug/L	NC
ARSENIC	ug/L	NR
BARIUM	ug/L	0.6
BERYLLIUM	ug/L	100
CADMIUM	ug/L	NC
CALCIUM	ug/L	0.3
CHROMIUM	ug/L	33.4
COBALT	ug/L	NC
COPPER	ug/L	5.9
IRON	ug/L	0.6
LEAD	ug/L	NR
MAGNESIUM	ug/L	8.4
MANGANESE	ug/L	5.0
NICKEL	ug/L	100
POTASSIUM	ug/L	NC
SELENIUM	ug/L	NR
SILVER	ug/L	NC
SODIUM	ug/L	100
THALLIUM	ug/L	NR
VANADIUM	ug/L	100
ZINC	ug/L	25.3

*** - INDICATES VALUE OUTSIDE QC LIMITS**
NC DENOTES NO CALCULATION DUE TO NON-DETECT RESULTS IN BOTH SAMPLES
NR DENOTES COMPOUND NOT REQUIRED FOR SERIAL DILUTION

CORRESPONDING SDG'S AND ASSOCIATED SAMPLES

OR002: 08B00201, 08B00301, 08B00401, 07D00101, 07D00201, 07D00301, 01B00101, 07D00401, 07D00501, 07D00601, 07D01401, 07D01001, 07D01201, 07D01301, 07D01501, 02B00601, 07D01201D, 06D01201, 06D01301, 06D01401, 06D01201D

ANALYTE	RPD
	SOIL
ALL ICP ANALYTES	+/-10%

+/-10% RULE ONLY APPLIES TO RESULTS GREATER THAN 50 TIMES THE IDL
(SOME VALUES ROUNDED TO LIMIT %Ds TO THREE (3) SIGNIFICANT FIGURES)

TABLE B - 2, CONTINUED
SOIL SAMPLE SERIAL DILUTION
METALS SUMMARY TABLE
NTC-ORLANDO, GROUP 1 SCREENING STUDY
AND BACKGROUND SAMPLING PROGRAM

SAMPLE ORB00701		SDG OR009
%D = PERCENT DIFFERENCE		%D
METALS ANALYTES	UNITS	
ALUMINUM	ug/L	3.7
ANTIMONY	ug/L	NC
ARSENIC	ug/L	NR
BARIUM	ug/L	6.3
BERYLLIUM	ug/L	NC
CADMIUM	ug/L	NC
CALCIUM	ug/L	25.0
CHROMIUM	ug/L	5.7
COBALT	ug/L	NC
COPPER	ug/L	NC
IRON	ug/L	3.4
LEAD	ug/L	NR
MAGNESIUM	ug/L	100
MANGANESE	ug/L	152
NICKEL	ug/L	NC
POTASSIUM	ug/L	NC
SELENIUM	ug/L	NR
SILVER	ug/L	100
SODIUM	ug/L	NC
THALLIUM	ug/L	NR
VANADIUM	ug/L	47.9
ZINC	ug/L	NC

*** - INDICATES VALUE OUTSIDE QC LIMITS**
NC DENOTES NO CALCULATION DUE TO NON-DETECT RESULTS IN BOTH SAMPLES
NR DENOTES COMPOUND NOT REQUIRED FOR SERIAL DILUTION

CORRESPONDING SDG'S AND ASSOCIATED SAMPLES

OR009: ORB00101, ORS00101, ORB00301, ORS00301, ORB00201, ORS00201, ORB00401, ORS00401, ORB00501, ORS00501, ORS00601, ORB00601, ORB00701, ORS00701, ORB00801, ORS00801, ORB00901, ORS00901, ORB00601D

ANALYTE	RPD
	SOIL
ALL ICP ANALYTES	+/-10%

+/-10% RULE ONLY APPLIES TO RESULTS GREATER THAN 50 TIMES THE IDL
(SOME VALUES ROUNDED TO LIMIT %Ds TO THREE (3) SIGNIFICANT FIGURES)

TABLE B - 2, CONTINUED
SOIL SAMPLE SERIAL DILUTION
METALS SUMMARY TABLE
NTC-ORLANDO, GROUP 1 SCREENING STUDY
AND BACKGROUND SAMPLING PROGRAM

SAMPLE ORB01201		SDG OR010
%D = PERCENT DIFFERENCE		%D
METALS ANALYTES	UNITS	
ALUMINUM	ug/L	0.5
ANTIMONY	ug/L	NC
ARSENIC	ug/L	NR
BARIUM	ug/L	100
BERYLLIUM	ug/L	NC
CADMIUM	ug/L	NC
CALCIUM	ug/L	8.9
CHROMIUM	ug/L	453
COBALT	ug/L	NC
COPPER	ug/L	100
IRON	ug/L	21.9
LEAD	ug/L	NR
MAGNESIUM	ug/L	707
MANGANESE	ug/L	100
NICKEL	ug/L	NC
POTASSIUM	ug/L	NC
SELENIUM	ug/L	NR
SILVER	ug/L	NC
SODIUM	ug/L	NC
THALLIUM	ug/L	NR
VANADIUM	ug/L	NC
ZINC	ug/L	100

*** - INDICATES VALUE OUTSIDE QC LIMITS**
NC DENOTES NO CALCULATION DUE TO NON-DETECT RESULTS IN BOTH SAMPLES
NR DENOTES COMPOUND NOT REQUIRED FOR SERIAL DILUTION

CORRESPONDING SDG'S AND ASSOCIATED SAMPLES

OR010: ORB01001, ORS01001, ORB01101, ORS01101, ORB01201, ORS01201, ORB01401, ORS01401, ORB01501, ORS01501, ORB01601, ORS01601, ORB01001D, ORB01401D, ORS01201D, ORB01301, ORS01301

ANALYTE	RPD
	SOIL
ALL ICP ANALYTES	+/-10%

+/-10% RULE ONLY APPLIES TO RESULTS GREATER THAN 50 TIMES THE IDL
(SOME VALUES ROUNDED TO LIMIT %Ds TO THREE (3) SIGNIFICANT FIGURES)

TABLE B - 2, CONTINUED
SOIL SAMPLE SERIAL DILUTION
METALS SUMMARY TABLE
NTC-ORLANDO, GROUP 1 SCREENING STUDY
AND BACKGROUND SAMPLING PROGRAM

SAMPLE 09S00200		SDG OR001
%D = PERCENT DIFFERENCE		%D
METALS ANALYTES	UNITS	
ALUMINUM	ug/L	13.0
ANTIMONY	ug/L	NC
ARSENIC	ug/L	NR
BARIUM	ug/L	18.4
BERYLLIUM	ug/L	NC
CADMIUM	ug/L	NC
CALCIUM	ug/L	8.7
CHROMIUM	ug/L	360
COBALT	ug/L	NC
COPPER	ug/L	56.0
IRON	ug/L	*16.5
LEAD	ug/L	NR
MAGNESIUM	ug/L	67.3
MANGANESE	ug/L	3.1
NICKEL	ug/L	NC
POTASSIUM	ug/L	NC
SELENIUM	ug/L	NR
SILVER	ug/L	NC
SODIUM	ug/L	NC
THALLIUM	ug/L	NR
VANADIUM	ug/L	NC
ZINC	ug/L	100

*** - INDICATES VALUE OUTSIDE QC LIMITS**
NC DENOTES NO CALCULATION DUE TO NON-DETECT RESULTS IN BOTH SAMPLES
NR DENOTES COMPOUND NOT REQUIRED FOR SERIAL DILUTION

CORRESPONDING SDG'S AND ASSOCIATED SAMPLES

OR001: 01S00100, 09S00100, 09S00100D, 09S00200, 09S00300, 09S00400, 01B00101, 01B00401, 08S00100, 08S00200, 08S00300, 08S00400, 08S00500, 08S00600, 08S00700, 08S00800, 01B00201, 01B00301, 09B00101, 10B00101, 10B00101D, 08B00101

ANALYTE	RPD
	SOIL
ALL ICP ANALYTES	+/-10%

+/-10% RULE ONLY APPLIES TO RESULTS GREATER THAN 50 TIMES THE IDL
(SOME VALUES ROUNDED TO LIMIT %Ds TO THREE (3) SIGNIFICANT FIGURES)

APPENDIX C

REJECTED DATA SUMMARY

TABLE C-1
LOW CONCENTRATION VOLATILES - REJECTED DATA
NTC-ORLANDO, GROUP 1 SCREENING STUDY
AND BACKGROUND SAMPLING PROGRAM

SDG	# SAMPLES/MATRIX		# OF COMPOUNDS REJECTED PER MATRIX	
	QC	H2O	QC	H2O
OR005	9	14	25	41
OR011	5	9	15	26
OR012	2	13	6	39
OR002	2	0	6	0
OR008	0	0	0	0
OR009	0	0	0	0
OR001	0	0	0	0
OR010	0	0	0	0
GRAND TOTAL	18	36	52	106
COMPLETION GOAL (>80%)			92.8%	92.6%

OVERALL COMPLETENESS
92.7%

MATRIX KEY

QC = QC SAMPLES
H2O = WATER SAMPLES
SOIL = SOIL SAMPLES

*** 40 TARGET COMPOUNDS PER SAMPLE**

TABLE C-2
GC/MS VOLATILES - REJECTED DATA
NTC-ORLANDO, GROUP 1 SCREENING STUDY
AND BACKGROUND SAMPLING PROGRAM

SDG	# SAMPLES/MATRIX		# OF COMPOUNDS REJECTED PER MATRIX	
	QC	SOIL	QC	SOIL
OR005	0	0	0	0
OR011	0	0	0	0
OR012	0	0	0	0
OR002	8	19	0	0
OR008	12	16	0	0
OR009	5	18	0	0
OR001	7	20	1	0
OR010	5	14	0	0
GRAND TOTAL	37	87	1	0
COMPLETION GOAL (>80%)			99.9%	100.0%

OVERALL COMPLETENESS
100.0%

MATRIX KEY

QC = QC SAMPLES
H20 = WATER SAMPLES
SOIL = SOIL SAMPLES

*** 33 TARGET COMPOUNDS PER SAMPLE**

TABLE C-3
LOW CONCENTRATION SEMIVOLATILES - REJECTED DATA
NTC-ORLANDO, GROUP 1 SCREENING STUDY
AND BACKGROUND SAMPLING PROGRAM

				# OF COMPOUNDS REJECTED PER MATRIX	
SDG	# SAMPLES/MATRIX			QC	H2O
	QC	H2O			
OR005	4	14		0	0
OR011	3	9		0	0
OR012	1	13		0	0
OR002	0	0		0	0
OR008	0	0		0	0
OR009	0	0		0	0
OR001	0	0		0	0
OR010	0	0		0	0
GRAND TOTAL	8	36		0	0
COMPLETION GOAL (>80%)				100.0%	100.0%

OVERALL COMPLETENESS
100.0%

MATRIX KEY

QC = QC SAMPLES
H2O = WATER SAMPLES
SOIL = SOIL SAMPLES

*** 3 TARGET COMPOUNDS PER SAMPLE**

TABLE C-4
GC/MS SEMIVOLATILES - REJECTED DATA
NTC-ORLANDO, GROUP 1 SCREENING STUDY
AND BACKGROUND SAMPLING PROGRAM

SDG	# SAMPLES/MATRIX			# OF COMPOUNDS REJECTED PER MATRIX		
	QC	WATER	SOIL	QC	WATER	SOIL
OR005	3	14	0	0	0	0
OR011	3	9	0	0	0	0
OR012	1	13	0	0	0	0
OR002	4	0	19	0	0	0
OR008	7	0	19	0	0	0
OR009	3	0	18	0	0	0
OR001	8	0	20	0	0	0
OR010	4	0	14	0	0	0
GRAND TOTAL	33	36	90	0	0	0
COMPLETION GOAL (>80%)				100.0%	100.0%	100.0%

OVERALL COMPLETENESS
100.0%

MATRIX KEY

QC = QC SAMPLES
H20 = WATER SAMPLES
SOIL = SOIL SAMPLES

*** 64 TARGET COMPOUNDS PER SAMPLE**

TABLE C-5
POLYNUCLEAR AROMATIC HYDROCARBONS - REJECTED DATA
NTC-ORLANDO, GROUP 1 SCREENING STUDY
AND BACKGROUND SAMPLING PROGRAM

SDG	# SAMPLES/MATRIX		# OF COMPOUNDS REJECTED PER MATRIX	
	QC	WATER	QC	WATER
OR005	3	14	0	0
OR011	3	9	0	0
OR012	1	13	0	0
OR002	0	0	0	0
OR008	0	0	0	0
OR009	0	0	0	0
OR001	1	0	0	0
OR010	0	0	0	0
GRAND TOTAL	8	36	0	0
COMPLETION GOAL (>80%)			100.0%	100.0%

OVERALL COMPLETENESS
100.0%

MATRIX KEY

QC = QC SAMPLES
H20 = WATER SAMPLES
SOIL = SOIL SAMPLES

*** 1 TARGET COMPOUND PER SAMPLE**

TABLE C-6
PESTICIDES/PCBs - REJECTED DATA
NTC-ORLANDO, GROUP 1 SCREENING STUDY
AND BACKGROUND SAMPLING PROGRAM

SDG	# SAMPLES/MATRIX			# OF COMPOUNDS REJECTED PER MATRIX		
	QC	WATER	SOIL	QC	WATER	SOIL
OR005	3	14	0	0	0	0
OR011	3	9	0	0	0	0
OR012	1	13	0	0	0	0
OR002	4	0	19	0	0	0
OR008	7	0	19	0	0	0
OR009	3	0	18	0	0	56
OR001	8	0	20	0	0	0
OR010	4	0	14	0	0	0
GRAND TOTAL	33	36	90	0	0	56
COMPLETION GOAL (>80%)				100.0%	100.0%	97.8%

OVERALL COMPLETENESS
99.3%

MATRIX KEY

QC = QC SAMPLES
H20 = WATER SAMPLES
SOIL = SOIL SAMPLES

*** 28 TARGET COMPOUNDS PER SAMPLE**

TABLE C-7
CHLORINATED HERBICIDES - REJECTED DATA
NTC-ORLANDO, GROUP 1 SCREENING STUDY
AND BACKGROUND SAMPLING PROGRAM

SDG	# SAMPLES/MATRIX				# OF COMPOUNDS REJECTED PER MATRIX		
	QC	WATER	SOIL		QC	WATER	SOIL
OR005	2	8	0		0	0	0
OR011	3	9	0		0	0	0
OR012	1	6	0		0	0	0
OR002	4	0	17		0	0	0
OR008	3	0	5		0	0	0
OR009	3	0	18		0	0	0
OR001	7	0	15		0	0	0
OR010	4	0	14		0	0	0
GRAND TOTAL	27	23	69		0	0	0
COMPLETION GOAL (>80%)					100.0%	100.0%	100.0%

OVERALL COMPLETENESS
100.0%

MATRIX KEY

QC = QC SAMPLES
H20 = WATER SAMPLES
SOIL = SOIL SAMPLES

* 10 TARGET COMPOUNDS PER SAMPLE

TABLE C-8
ENDOTHALL - REJECTED DATA
NTC-ORLANDO, GROUP 1 SCREENING STUDY AND BACKGROUND SAMPLING PROGRAM

SDG	# SAMPLES/MATRIX		# OF COMPOUNDS REJECTED PER MATRIX	
	QC	H2O	QC	H2O
OR005	2	4	0	0
OR011	0	0	0	0
OR012	0	0	0	0
OR002	0	0	0	0
OR008	0	0	0	0
OR009	0	0	0	0
OR001	1	0	0	0
OR010	0	0	0	0
GRAND TOTAL	3	4	0	0
COMPLETION GOAL (>80%)			100.0%	100.0%

OVERALL COMPLETENESS
100.0%

MATRIX KEY

QC = QC SAMPLES
H2O = WATER SAMPLES
SOIL = SOIL SAMPLES

*** 1 TARGET COMPOUNDS PER SAMPLE**

TABLE C-9
TOTAL METALS - REJECTED DATA
NTC-ORLANDO, GROUP 1 SCREENING STUDY
AND BACKGROUND SAMPLING PROGRAM

SDG	# SAMPLES/MATRIX			# OF COMPOUNDS REJECTED PER MATRIX		
	QC	WATER	SOIL	QC	WATER	SOIL
OR005	3	14	0	0	0	0
OR011	3	9	0	0	0	0
OR012	1	13	0	0	0	0
OR002	4	0	19	0	0	0
OR008	7	0	19	0	0	0
OR009	3	0	18	0	0	0
OR001	8	0	20	0	0	0
OR010	4	0	14	0	0	0
GRAND TOTAL	33	36	90	0	0	0
COMPLETION GOAL (>80%)				100.0%	100.0%	100.0%

OVERALL COMPLETENESS
100.0%

MATRIX KEY

QC = QC SAMPLES
H20 = WATER SAMPLES
SOIL = SOIL SAMPLES

* 23 TARGET COMPOUNDS PER SAMPLE

TABLE C-10
CYANIDE - REJECTED DATA
NTC-ORLANDO, GROUP 1 SCREENING STUDY
AND BACKGROUND SAMPLING PROGRAM

SDG	# SAMPLES/MATRIX		# OF COMPOUNDS REJECTED PER MATRIX	
	QC	SOIL	QC	SOIL
OR005	0	0	0	0
OR011	0	0	0	0
OR012	0	0	0	0
OR002	3	14	0	0
OR008	0	0	0	0
OR009	0	0	0	0
OR001	1	0	0	0
OR010	0	0	0	0
GRAND TOTAL	4	14	0	0
COMPLETION GOAL (>80%)			100.0%	100.0%

OVERALL COMPLETENESS
100.0%

MATRIX KEY

QC = QC SAMPLES
H20 = WATER SAMPLES
SOIL = SOIL SAMPLES

*** 1 TARGET COMPOUND PER SAMPLE**

TABLE C-11
TOTAL PETROLEUM HYDROCARBONS - REJECTED DATA
NTC-ORLANDO, GROUP 1 SCREENING STUDY
AND BACKGROUND SAMPLING PROGRAM

				# OF COMPOUNDS REJECTED PER MATRIX	
SDG	# SAMPLES/MATRIX			QC	SOIL
	QC	SOIL			
OR005	0	0		0	0
OR011	0	0		0	0
OR012	0	0		0	0
OR002	3	8		0	0
OR008	3	3		0	0
OR009	0	0		0	0
OR001	1	0		0	0
OR010	0	0		0	0
GRAND TOTAL	7	11		0	0
COMPLETION GOAL (>80%)				100.0%	100.0%

OVERALL COMPLETENESS
100.0%

MATRIX KEY

QC = QC SAMPLES
H20 = WATER SAMPLES
SOIL = SOIL SAMPLES

*** 1 TARGET COMPOUND PER SAMPLE**

TABLE C-12
TOTAL ORGANIC HYDROCARBONS - REJECTED DATA
NTC-ORLANDO, GROUP 1 SCREENING STUDY
AND BACKGROUND SAMPLING PROGRAM

SDG	# SAMPLES/MATRIX		# OF COMPOUNDS REJECTED PER MATRIX	
	QC	SOIL	QC	SOIL
OR005	0	0	0	0
OR011	0	0	0	0
OR012	0	0	0	0
OR002	2	14	0	0
OR008	0	0	0	0
OR009	0	0	0	0
OR001	1	0	0	0
OR010	0	0	0	0
GRAND TOTAL	3	14	0	0
COMPLETION GOAL (>80%)			100.0%	100.0%

OVERALL COMPLETENESS
100.0%

MATRIX KEY

QC = QC SAMPLES
H20 = WATER SAMPLES
SOIL = SOIL SAMPLES

* **1 TARGET COMPOUND PER SAMPLE**

APPENDIX H

SUMMARY OF GENERAL STATISTICS

Background (combined) GW

Chem.name is chemical name
Min.dl is minimum reported detection level
Max.dl is maximum reported detection level
Min.lv is minimum level reported
Max.lv is maximum level reported
ADL.Avg is above detection level average value
Median is median of all values above and below detection level
Num.Det/Tot.Sample is number of detects / total number sampled

Chem.name	Min.dl	Max.dl	Min.lv	Max.lv	ADL.Avg	Median	Num.Det/Tot.Sample
1,1,1-Trichloroethane	1.000	1.000	N/A	N/A	N/A	1.000 U	0/12
1,1,2,2-Tetrachloroethane	1.000	1.000	N/A	N/A	N/A	1.000 U	0/12
1,1,2-Trichloroethane	1.000	1.000	N/A	N/A	N/A	1.000 U	0/12
1,1-Dichloroethane	1.000	1.000	N/A	N/A	N/A	1.000 U	0/12
1,1-Dichloroethene	1.000	1.000	N/A	N/A	N/A	1.000 U	0/12
1,2,4-Trichlorobenzene	10.000	10.000	N/A	N/A	N/A	10.000 U	0/12
1,2-Dibromo-3-chloropropa	1.000	1.000	N/A	N/A	N/A	1.000 U	0/12
1,2-Dibromoethane	1.000	1.000	N/A	N/A	N/A	1.000 U	0/12
1,2-Dichlorobenzene	1.000	10.000	N/A	N/A	N/A	5.500 U	0/24
1,2-Dichloroethane	1.000	1.000	N/A	N/A	N/A	1.000 U	0/12
1,2-Dichloropropane	1.000	1.000	N/A	N/A	N/A	1.000 U	0/12
1,3-Dichlorobenzene	1.000	10.000	N/A	N/A	N/A	5.500 U	0/24
1,4-Dichlorobenzene	1.000	10.000	N/A	N/A	N/A	5.500 U	0/24
2,2'-oxybis(1-Chloropropa	10.000	10.000	N/A	N/A	N/A	10.000 U	0/12
2,4,5-T	0.500	0.500	N/A	N/A	N/A	0.500 U	0/12
2,4,5-Trichlorophenol	25.000	25.000	N/A	N/A	N/A	25.000 U	0/12
2,4,6-Trichlorophenol	10.000	10.000	N/A	N/A	N/A	10.000 U	0/12
2,4-D	2.500	2.500	N/A	N/A	N/A	2.500 U	0/12
2,4-DB	2.500	2.500	N/A	N/A	N/A	2.500 U	0/12
2,4-DP (Dichloroprop)	2.500	2.500	N/A	N/A	N/A	2.500 U	0/12
2,4-Dichlorophenol	10.000	10.000	N/A	N/A	N/A	10.000 U	0/12
2,4-Dimethylphenol	10.000	10.000	N/A	N/A	N/A	10.000 U	0/12
2,4-Dinitrophenol	25.000	25.000	N/A	N/A	N/A	25.000 U	0/12
2,4-Dinitrotoluene	10.000	10.000	N/A	N/A	N/A	10.000 U	0/12
2,6-Dinitrotoluene	10.000	10.000	N/A	N/A	N/A	10.000 U	0/12
2-Butanone	5.000	5.000	N/A	N/A	N/A	5.000 U	0/12
2-Chloronaphthalene	10.000	10.000	N/A	N/A	N/A	10.000 U	0/12
2-Chlorophenol	10.000	10.000	N/A	N/A	N/A	10.000 U	0/12
2-Hexanone	5.000	5.000	N/A	N/A	N/A	5.000 U	0/12
2-Methylnaphthalene	10.000	10.000	N/A	N/A	N/A	10.000 U	0/12
2-Methylphenol	10.000	10.000	N/A	N/A	N/A	10.000 U	0/12
2-Nitroaniline	25.000	25.000	N/A	N/A	N/A	25.000 U	0/12
2-Nitrophenol	10.000	10.000	N/A	N/A	N/A	10.000 U	0/12
3,3'-Dichlorobenzidine	10.000	10.000	N/A	N/A	N/A	10.000 U	0/12
3-Nitroaniline	25.000	25.000	N/A	N/A	N/A	25.000 U	0/12
4,4'-DDD	0.100	0.100	N/A	N/A	N/A	0.100 U	0/12
4,4'-DDE	0.100	0.100	N/A	N/A	N/A	0.100 U	0/12
4,4'-DDT	0.100	0.100	N/A	N/A	N/A	0.100 U	0/12
4,6-Dinitro-2-methylpheno	25.000	25.000	N/A	N/A	N/A	25.000 U	0/12
4-Bromophenyl-phenylether	10.000	10.000	N/A	N/A	N/A	10.000 U	0/12
4-Chloro-3-methylphenol	10.000	10.000	N/A	N/A	N/A	10.000 U	0/12
4-Chloroaniline	10.000	10.000	N/A	N/A	N/A	10.000 U	0/12
4-Chlorophenyl-phenylethe	10.000	10.000	N/A	N/A	N/A	10.000 U	0/12
4-Methyl-2-pentanone	5.000	5.000	N/A	N/A	N/A	5.000 U	0/12
4-Methylphenol	10.000	10.000	N/A	N/A	N/A	10.000 U	0/12
4-Nitroaniline	25.000	25.000	N/A	N/A	N/A	25.000 U	0/12
4-Nitrophenol	25.000	25.000	N/A	N/A	N/A	25.000 U	0/12
Acenaphthene	10.000	10.000	N/A	N/A	N/A	10.000 U	0/12
Acenaphthylene	10.000	10.000	N/A	N/A	N/A	10.000 U	0/12
Acetone	5.000	5.000	N/A	N/A	N/A	5.000 U	0/12
Actinium-228	23.300	38.900	N/A	N/A	N/A	34.700 U	0/12
Aldrin	0.050	0.050	N/A	N/A	N/A	0.050 U	0/12
Aluminum	14.600	14.600	22.700	7260.000	2033.427	829.000	11/12
Anthracene	10.000	10.000	N/A	N/A	N/A	10.000 U	0/12
Antimony	1.200	1.200	1.400	2.200	1.833	1.200 U	3/12
Aroclor-1016	0.500	0.500	N/A	N/A	N/A	0.500 U	0/12
Aroclor-1221	0.500	0.500	N/A	N/A	N/A	0.500 U	0/12
Aroclor-1232	0.500	0.500	N/A	N/A	N/A	0.500 U	0/12
Aroclor-1242	0.500	0.500	N/A	N/A	N/A	0.500 U	0/12
Aroclor-1248	0.500	0.500	N/A	N/A	N/A	0.500 U	0/12

Aroclor-1254	0.500	0.500	N/A	N/A	N/A	0.500 U	0/12
Aroclor-1260	0.500	0.500	N/A	N/A	N/A	0.500 U	0/12
Arsenic	1.500	1.500	1.700	3.700	2.571	1.850 B	7/12
Barium	N/A	N/A	2.000	71.000	15.708	8.800 B	12/12
Benzene	1.000	1.000	N/A	N/A	N/A	1.000 U	0/12
Benzo(a)anthracene	10.000	10.000	N/A	N/A	N/A	10.000 U	0/12
Benzo(a)pyrene	0.100	10.000	N/A	N/A	N/A	5.050 U	0/24
Benzo(b)fluoranthene	10.000	10.000	N/A	N/A	N/A	10.000 U	0/12
Benzo(g,h,i)perylene	10.000	10.000	N/A	N/A	N/A	10.000 U	0/12
Benzo(k)fluoranthene	10.000	10.000	N/A	N/A	N/A	10.000 U	0/12
Beryllium	0.200	0.200	N/A	N/A	N/A	0.200 U	0/12
Bismuth-212	71.600	229.000	232.000	232.000	232.000	188.500 U	1/12
Bismuth-214	17.200	26.700	N/A	N/A	N/A	23.000 U	0/12
Bromochloromethane	1.000	1.000	N/A	N/A	N/A	1.000 U	0/12
Bromodichloromethane	1.000	1.000	1.000	1.000	1.000	1.000 U	1/12
Bromoform	1.000	1.000	N/A	N/A	N/A	1.000 U	0/12
Bromomethane	1.000	1.000	N/A	N/A	N/A	1.000 U	0/12
Butylbenzylphthalate	10.000	10.000	N/A	N/A	N/A	10.000 U	0/12
Cadmium	2.100	2.100	2.800	2.800	2.800	2.100 U	1/12
Calcium	N/A	N/A	2660.000	42500.000	18415.000	15550.000	12/12
Carbazole	10.000	10.000	N/A	N/A	N/A	10.000 U	0/12
Carbon disulfide	1.000	5.000	N/A	N/A	N/A	1.000 U	0/12
Carbon tetrachloride	1.000	1.000	N/A	N/A	N/A	1.000 U	0/12
Cesium-137	3.300	8.400	N/A	N/A	N/A	5.750 U	0/12
Chlorobenzene	1.000	1.000	N/A	N/A	N/A	1.000 U	0/12
Chloroethane	1.000	1.000	N/A	N/A	N/A	1.000 U	0/12
Chloroform	1.000	1.000	0.500	4.000	1.200	1.000 U	7/12
Chloromethane	1.000	1.000	N/A	N/A	N/A	1.000 U	0/12
Chromium	1.900	1.900	2.400	6.000	3.917	2.150 B	6/12
Chrysene	10.000	10.000	N/A	N/A	N/A	10.000 U	0/12
Cobalt	2.600	2.600	N/A	N/A	N/A	2.600 U	0/12
Copper	1.500	1.500	1.800	3.600	2.400	1.500 U	3/12
Dalapon	5.000	5.000	N/A	N/A	N/A	5.000 U	0/12
Di-n-butylphthalate	10.000	10.000	2.000	2.000	2.000	10.000 U	1/12
Di-n-octylphthalate	10.000	10.000	2.000	3.000	2.250	10.000 U	4/12
Dibenz(a,h)anthracene	10.000	10.000	N/A	N/A	N/A	10.000 U	0/12
Dibenzofuran	10.000	10.000	N/A	N/A	N/A	10.000 U	0/12
Dibromochloromethane	1.000	1.000	N/A	N/A	N/A	1.000 U	0/12
Dicamba	0.500	0.500	N/A	N/A	N/A	0.500 U	0/12
Dieldrin	0.100	0.100	N/A	N/A	N/A	0.100 U	0/12
Diethylphthalate	10.000	10.000	N/A	N/A	N/A	10.000 U	0/12
Dimethylphthalate	10.000	10.000	N/A	N/A	N/A	10.000 U	0/12
Dinoseb	0.500	0.500	N/A	N/A	N/A	0.500 U	0/11
Endosulfan I	0.050	0.050	N/A	N/A	N/A	0.050 U	0/12
Endosulfan II	0.100	0.100	N/A	N/A	N/A	0.100 U	0/12
Endosulfan sulfate	0.100	0.100	N/A	N/A	N/A	0.100 U	0/12
Endrin	0.100	0.100	N/A	N/A	N/A	0.100 U	0/12
Endrin aldehyde	0.100	0.100	N/A	N/A	N/A	0.100 U	0/12
Endrin ketone	0.100	0.100	N/A	N/A	N/A	0.100 U	0/12
Ethylbenzene	1.000	1.000	N/A	N/A	N/A	1.000 U	0/12
Fluoranthene	10.000	10.000	N/A	N/A	N/A	10.000 U	0/12
Fluorene	10.000	10.000	N/A	N/A	N/A	10.000 U	0/12
Gross Alpha	1.000	1.000	1.100	16.200	6.411	3.900	9/12
Gross Beta	3.000	3.000	3.000	6.300	4.800	3.000 U	5/12
Heptachlor	0.050	0.050	N/A	N/A	N/A	0.050 U	0/12
Heptachlor epoxide	0.050	0.050	N/A	N/A	N/A	0.050 U	0/12
Hexachlorobenzene	1.000	10.000	N/A	N/A	N/A	5.500 U	0/24
Hexachlorobutadiene	10.000	10.000	N/A	N/A	N/A	10.000 U	0/12
Hexachlorocyclopentadiene	10.000	10.000	N/A	N/A	N/A	10.000 U	0/12
Hexachloroethane	10.000	10.000	N/A	N/A	N/A	10.000 U	0/12
Indeno(1,2,3-cd)pyrene	10.000	10.000	N/A	N/A	N/A	10.000 U	0/12
Iron	N/A	N/A	16.000	1540.000	613.558	285.500	12/12
Isophorone	10.000	10.000	N/A	N/A	N/A	10.000 U	0/12
Lead	1.300	1.300	1.700	2.300	2.000	1.300 U	2/12
Lead-212	14.300	19.000	N/A	N/A	N/A	16.600 U	0/12
Lead-214	15.200	23.700	N/A	N/A	N/A	21.450 U	0/12
MCPA	250.000	250.000	N/A	N/A	N/A	250.000 U	0/12
MCPP	250.000	250.000	N/A	N/A	N/A	250.000 U	0/12
Magnesium	N/A	N/A	713.000	4930.000	2280.000	1725.000 B	12/12
Manganese	N/A	N/A	2.400	14.100	8.483	10.150 B	12/12
Mercury	0.020	0.020	0.030	0.120	0.061	0.040 B	7/12
Methoxychlor	0.500	0.500	N/A	N/A	N/A	0.500 U	0/12

Methylene chloride	0.500	0.900	N/A	N/A	N/A	0.700 UJ	0/12
N-Nitroso-di-n-propylamin	10.000	10.000	N/A	N/A	N/A	10.000 U	0/12
N-Nitrosodiphenylamine (1	10.000	10.000	N/A	N/A	N/A	10.000 U	0/12
Naphthalene	10.000	10.000	N/A	N/A	N/A	10.000 U	0/12
Nickel	9.100	9.100	N/A	N/A	N/A	9.100 U	0/12
Nitrobenzene	10.000	10.000	N/A	N/A	N/A	10.000 U	0/12
Pentachlorophenol	1.000	25.000	N/A	N/A	N/A	13.000 U	0/24
Phenanthrene	10.000	10.000	N/A	N/A	N/A	10.000 U	0/12
Phenol	10.000	10.000	N/A	N/A	N/A	10.000 U	0/12
Potassium	339.000	339.000	419.000	5460.000	2699.857	584.500 B	7/12
Potassium-40	83.000	213.000	N/A	N/A	N/A	193.500 U	0/12
Pyrene	10.000	10.000	N/A	N/A	N/A	10.000 U	0/12
Selenium	2.000	2.000	4.300	5.400	4.850	2.000 U	2/12
Silver	2.200	2.200	N/A	N/A	N/A	2.200 U	0/12
Silvex (2,4,5-TP)	0.500	0.500	N/A	N/A	N/A	0.500 U	0/12
Sodium	N/A	N/A	814.000	19800.000	9111.167	6970.000	12/12
Styrene	1.000	1.000	N/A	N/A	N/A	1.000 U	0/12
Tetrachloroethene	1.000	1.000	N/A	N/A	N/A	1.000 U	0/12
Thallium	1.300	1.300	1.900	1.900	1.900	1.300 U	1/12
Thallium-208	6.500	11.800	N/A	N/A	N/A	9.550 U	0/12
Thorium-228	564.000	1070.000	N/A	N/A	N/A	912.000 U	0/12
Thorium-234	313.000	670.000	N/A	N/A	N/A	551.500 U	0/12
Toluene	1.000	1.000	N/A	N/A	N/A	1.000 U	0/12
Total Suspended Solids	1.000	1.000	3.000	21.000	9.333	2.000	6/12
Toxaphene	5.000	5.000	N/A	N/A	N/A	5.000 U	0/12
Trichloroethene	1.000	1.000	N/A	N/A	N/A	1.000 U	0/12
Uranium-235	30.500	51.900	N/A	N/A	N/A	42.550 U	0/12
Vanadium	2.500	2.500	2.900	19.200	10.318	9.950 B	11/12
Vinyl chloride	1.000	1.000	N/A	N/A	N/A	1.000 U	0/12
Xylene (total)	1.000	1.000	N/A	N/A	N/A	1.000 U	0/12
Zinc	1.100	1.100	1.400	5.000	2.755	2.100 B	11/12
alpha-BHC	0.050	0.050	N/A	N/A	N/A	0.050 U	0/12
alpha-Chlordane	0.050	0.050	N/A	N/A	N/A	0.050 U	0/12
beta-BHC	0.050	0.050	N/A	N/A	N/A	0.050 U	0/12
bis(2-Chloroethoxy)methan	10.000	10.000	N/A	N/A	N/A	10.000 U	0/12
bis(2-Chloroethyl)ether	10.000	10.000	N/A	N/A	N/A	10.000 U	0/12
bis(2-Ethylhexyl)phthalat	1.000	10.000	1.000	1.000	1.000	6.000 U	1/24
cis-1,2-Dichloroethene	1.000	1.000	N/A	N/A	N/A	1.000 U	0/12
cis-1,3-Dichloropropene	1.000	1.000	N/A	N/A	N/A	1.000 U	0/12
delta-BHC	0.050	0.050	N/A	N/A	N/A	0.050 U	0/12
gamma-BHC (Lindane)	0.050	0.050	N/A	N/A	N/A	0.050 U	0/12
gamma-Chlordane	0.050	0.050	N/A	N/A	N/A	0.050 U	0/12
trans-1,2-Dichloroethene	1.000	1.000	N/A	N/A	N/A	1.000 U	0/12
trans-1,3-Dichloropropene	1.000	1.000	N/A	N/A	N/A	1.000 U	0/12

Background (McCoy) Subsoils

Chem.name is chemical name
Min.dl is minimum reported detection level
Max.dl is maximum reported detection level
Min.lv is minimum level reported
Max.lv is maximum level reported
ADL.Avg is above detection level average value
Median is median of all values above and below detection level
Num.Det/Tot.Sample is number of detects / total number sampled

Chem.name	Min.dl	Max.dl	Min.lv	Max.lv	ADL.Avg	Median		Num.Det/Tot.Sample
1,1,1-Trichloroethane	11.000	12.000	N/A	N/A	N/A	12.000	U	0/7
1,1,2,2-Tetrachloroethane	11.000	12.000	N/A	N/A	N/A	12.000	U	0/7
1,1,2-Trichloroethane	11.000	12.000	N/A	N/A	N/A	12.000	U	0/7
1,1-Dichloroethane	11.000	12.000	N/A	N/A	N/A	12.000	U	0/7
1,1-Dichloroethene	11.000	12.000	N/A	N/A	N/A	12.000	U	0/7
1,2,4-Trichlorobenzene	380.000	400.000	N/A	N/A	N/A	400.000	U	0/7
1,2-Dichlorobenzene	380.000	400.000	N/A	N/A	N/A	400.000	U	0/7
1,2-Dichloroethane	11.000	12.000	N/A	N/A	N/A	12.000	U	0/7
1,2-Dichloroethene (total	11.000	12.000	N/A	N/A	N/A	12.000	U	0/7
1,2-Dichloropropane	11.000	12.000	N/A	N/A	N/A	12.000	U	0/7
1,3-Dichlorobenzene	380.000	400.000	N/A	N/A	N/A	400.000	U	0/7
1,4-Dichlorobenzene	380.000	400.000	N/A	N/A	N/A	400.000	U	0/7
2,2'-oxybis(1-Chloropropa	380.000	400.000	N/A	N/A	N/A	400.000	U	0/7
2,4,5-T	12.000	24.000	N/A	N/A	N/A	12.000	U	0/7
2,4,5-Trichlorophenol	950.000	990.000	N/A	N/A	N/A	990.000	U	0/7
2,4,6-Trichlorophenol	380.000	400.000	N/A	N/A	N/A	400.000	U	0/7
2,4-D	58.000	180.000	N/A	N/A	N/A	60.000	U	0/7
2,4-DB	58.000	120.000	N/A	N/A	N/A	60.000	U	0/7
2,4-DP (Dichloroprop)	58.000	120.000	N/A	N/A	N/A	60.000	U	0/7
2,4-Dichlorophenol	380.000	400.000	N/A	N/A	N/A	400.000	U	0/7
2,4-Dimethylphenol	380.000	400.000	N/A	N/A	N/A	400.000	U	0/7
2,4-Dinitrophenol	950.000	990.000	N/A	N/A	N/A	990.000	U	0/7
2,4-Dinitrotoluene	380.000	400.000	N/A	N/A	N/A	400.000	U	0/7
2,6-Dinitrotoluene	380.000	400.000	N/A	N/A	N/A	400.000	U	0/7
2-Butanone	11.000	12.000	N/A	N/A	N/A	12.000	U	0/7
2-Chloronaphthalene	380.000	400.000	N/A	N/A	N/A	400.000	U	0/7
2-Chlorophenol	380.000	400.000	N/A	N/A	N/A	400.000	U	0/7
2-Hexanone	11.000	12.000	N/A	N/A	N/A	12.000	U	0/7
2-Methylnaphthalene	380.000	400.000	N/A	N/A	N/A	400.000	U	0/7
2-Methylphenol	380.000	400.000	N/A	N/A	N/A	400.000	U	0/7
2-Nitroaniline	950.000	990.000	N/A	N/A	N/A	990.000	U	0/7
2-Nitrophenol	380.000	400.000	N/A	N/A	N/A	400.000	U	0/7
3,3'-Dichlorobenzidine	380.000	400.000	N/A	N/A	N/A	400.000	U	0/7
3-Nitroaniline	950.000	990.000	N/A	N/A	N/A	990.000	U	0/7
4,4'-DDD	3.800	4.000	N/A	N/A	N/A	3.900	U	0/7
4,4'-DDE	3.800	4.000	N/A	N/A	N/A	3.900	U	0/7
4,4'-DDT	3.800	4.000	N/A	N/A	N/A	3.900	U	0/7
4,6-Dinitro-2-methylpheno	950.000	990.000	N/A	N/A	N/A	990.000	U	0/7
4-Bromophenyl-phenylether	380.000	400.000	N/A	N/A	N/A	400.000	U	0/7
4-Chloro-3-methylphenol	380.000	400.000	N/A	N/A	N/A	400.000	U	0/7
4-Chloroaniline	380.000	400.000	N/A	N/A	N/A	400.000	U	0/7
4-Chlorophenyl-phenylethe	380.000	400.000	N/A	N/A	N/A	400.000	U	0/7
4-Methyl-2-pentanone	11.000	12.000	N/A	N/A	N/A	12.000	U	0/7
4-Methylphenol	380.000	400.000	N/A	N/A	N/A	400.000	U	0/7
4-Nitroaniline	950.000	990.000	N/A	N/A	N/A	990.000	U	0/7
4-Nitrophenol	950.000	990.000	N/A	N/A	N/A	990.000	U	0/7
Acenaphthene	380.000	400.000	N/A	N/A	N/A	400.000	U	0/7
Acenaphthylene	380.000	400.000	N/A	N/A	N/A	400.000	U	0/7
Acetone	5.000	12.000	N/A	N/A	N/A	11.000	U	0/7
Aldrin	2.000	2.000	N/A	N/A	N/A	2.000	U	0/7
Aluminum	N/A	N/A	379.000	10800.000	5158.429	2340.000		7/7
Anthracene	380.000	400.000	N/A	N/A	N/A	400.000	U	0/7
Antimony	5.500	6.000	N/A	N/A	N/A	5.800	U	0/7
Aroclor-1016	38.000	40.000	N/A	N/A	N/A	39.000	U	0/7
Aroclor-1221	78.000	81.000	N/A	N/A	N/A	80.000	U	0/7
Aroclor-1232	38.000	40.000	N/A	N/A	N/A	39.000	U	0/7
Aroclor-1242	38.000	40.000	N/A	N/A	N/A	39.000	U	0/7
Aroclor-1248	38.000	40.000	N/A	N/A	N/A	39.000	U	0/7
Aroclor-1254	38.000	40.000	N/A	N/A	N/A	39.000	U	0/7
Aroclor-1260	38.000	40.000	N/A	N/A	N/A	39.000	U	0/7

Arsenic	N/A	N/A	0.390	1.500	0.984	1.000	B	7/7
Barium	N/A	N/A	0.800	11.700	4.900	2.000	B	7/7
Benzene	11.000	12.000	N/A	N/A	N/A	12.000	U	0/7
Benzo(a)anthracene	380.000	400.000	N/A	N/A	N/A	400.000	U	0/7
Benzo(a)pyrene	380.000	400.000	N/A	N/A	N/A	400.000	U	0/7
Benzo(b)fluoranthene	380.000	400.000	N/A	N/A	N/A	400.000	U	0/7
Benzo(g,h,i)perylene	380.000	400.000	98.000	98.000	98.000	400.000	U	1/7
Benzo(k)fluoranthene	380.000	400.000	N/A	N/A	N/A	400.000	U	0/7
Beryllium	0.050	0.050	0.060	0.110	0.093	0.060	B	4/7
Bromodichloromethane	11.000	12.000	N/A	N/A	N/A	12.000	U	0/7
Bromoform	11.000	12.000	N/A	N/A	N/A	12.000	U	0/7
Bromomethane	11.000	12.000	N/A	N/A	N/A	12.000	U	0/7
Butylbenzylphthalate	380.000	400.000	N/A	N/A	N/A	400.000	U	0/7
Cadmium	0.480	0.510	0.760	0.760	0.760	0.500	U	1/7
Calcium	N/A	N/A	19.800	865.000	173.743	67.000	B	7/7
Carbazole	380.000	400.000	N/A	N/A	N/A	400.000	U	0/7
Carbon disulfide	11.000	12.000	N/A	N/A	N/A	12.000	U	0/7
Carbon tetrachloride	11.000	12.000	N/A	N/A	N/A	12.000	U	0/7
Chlorobenzene	11.000	12.000	N/A	N/A	N/A	12.000	U	0/7
Chloroethane	11.000	12.000	N/A	N/A	N/A	12.000	U	0/7
Chloroform	11.000	12.000	N/A	N/A	N/A	12.000	U	0/7
Chloromethane	11.000	12.000	N/A	N/A	N/A	12.000	U	0/7
Chromium	N/A	N/A	1.000	8.700	5.243	5.800		7/7
Chrysene	380.000	400.000	N/A	N/A	N/A	400.000	U	0/7
Cobalt	0.590	0.650	0.640	0.700	0.670	0.640	B	3/7
Copper	0.340	0.380	0.460	1.400	0.930	0.360	U	2/7
Dalapon	120.000	240.000	N/A	N/A	N/A	120.000	U	0/7
Di-n-butylphthalate	380.000	1500.000	N/A	N/A	N/A	400.000	U	0/7
Di-n-octylphthalate	380.000	400.000	230.000	230.000	230.000	400.000	U	1/7
Dibenz(a,h)anthracene	380.000	400.000	N/A	N/A	N/A	400.000	U	0/7
Dibenzofuran	380.000	400.000	N/A	N/A	N/A	400.000	U	0/7
Dibromochloromethane	11.000	12.000	N/A	N/A	N/A	12.000	U	0/7
Dicamba	12.000	24.000	N/A	N/A	N/A	12.000	U	0/7
Dieldrin	3.800	4.000	N/A	N/A	N/A	3.900	U	0/7
Diethylphthalate	380.000	400.000	N/A	N/A	N/A	400.000	U	0/7
Dimethylphthalate	380.000	400.000	N/A	N/A	N/A	400.000	U	0/7
Dinoseb	12.000	24.000	N/A	N/A	N/A	12.000	U	0/7
Endosulfan I	2.000	2.000	N/A	N/A	N/A	2.000	U	0/7
Endosulfan II	3.800	4.000	N/A	N/A	N/A	3.900	U	0/7
Endosulfan sulfate	3.800	4.000	N/A	N/A	N/A	3.900	U	0/7
Endrin	3.800	4.000	N/A	N/A	N/A	3.900	U	0/7
Endrin aldehyde	3.800	4.000	N/A	N/A	N/A	3.900	U	0/7
Endrin ketone	3.800	4.000	N/A	N/A	N/A	3.900	U	0/7
Ethylbenzene	11.000	12.000	N/A	N/A	N/A	12.000	U	0/7
Fluoranthene	380.000	400.000	120.000	120.000	120.000	400.000	U	1/7
Fluorene	380.000	400.000	N/A	N/A	N/A	400.000	U	0/7
Heptachlor	2.000	2.000	N/A	N/A	N/A	2.000	U	0/7
Heptachlor epoxide	2.000	2.000	N/A	N/A	N/A	2.000	U	0/7
Hexachlorobenzene	380.000	400.000	N/A	N/A	N/A	400.000	U	0/7
Hexachlorobutadiene	380.000	400.000	N/A	N/A	N/A	400.000	U	0/7
Hexachlorocyclopentadiene	380.000	400.000	N/A	N/A	N/A	400.000	U	0/7
Hexachloroethane	380.000	400.000	N/A	N/A	N/A	400.000	U	0/7
Indeno(1,2,3-cd)pyrene	380.000	400.000	N/A	N/A	N/A	400.000	U	0/7
Iron	N/A	N/A	35.100	1810.000	439.757	270.000		7/7
Isophorone	380.000	400.000	N/A	N/A	N/A	400.000	U	0/7
Lead	N/A	N/A	0.410	6.600	3.257	3.500		7/7
MCPA	5800.000	48000.000	N/A	N/A	N/A	12000.000	U	0/7
MCPP	5800.000	48000.000	N/A	N/A	N/A	12000.000	U	0/7
Magnesium	N/A	N/A	4.800	39.700	17.700	19.400	B	7/7
Manganese	0.170	0.180	0.300	0.500	0.374	0.300	B	5/7
Mercury	0.010	0.010	0.020	0.070	0.057	0.060		6/7
Methoxychlor	20.000	20.000	N/A	N/A	N/A	20.000	U	0/7
Methylene chloride	11.000	12.000	N/A	N/A	N/A	12.000	U	0/7
N-Nitroso-di-n-propylamin	380.000	400.000	N/A	N/A	N/A	400.000	U	0/7
N-Nitrosodiphenylamine (1	380.000	400.000	N/A	N/A	N/A	400.000	U	0/7
Naphthalene	380.000	400.000	N/A	N/A	N/A	400.000	U	0/7
Nickel	2.100	2.300	2.300	7.400	5.633	2.300	U	3/7
Nitrobenzene	380.000	400.000	N/A	N/A	N/A	400.000	U	0/7
Pentachlorophenol	950.000	990.000	N/A	N/A	N/A	990.000	U	0/7
Phenanthrene	380.000	400.000	N/A	N/A	N/A	400.000	U	0/7
Phenol	380.000	400.000	N/A	N/A	N/A	400.000	U	0/7
Potassium	77.500	84.900	N/A	N/A	N/A	81.100	U	0/7

Pyrene	380.000	400.000	N/A	N/A	N/A	400.000	U	0/7
Selenium	0.450	0.500	0.500	0.900	0.680	0.500	U	3/7
Silver	0.500	0.550	0.530	0.530	0.530	0.530	U	1/7
Silvex (2,4,5-TP)	12.000	24.000	N/A	N/A	N/A	12.000	U	0/7
Sodium	6.900	7.600	N/A	N/A	N/A	7.200	U	0/7
Styrene	11.000	12.000	N/A	N/A	N/A	12.000	U	0/7
Tetrachloroethene	11.000	12.000	N/A	N/A	N/A	12.000	U	0/7
Thallium	0.300	0.330	N/A	N/A	N/A	0.310	U	0/7
Toluene	11.000	12.000	N/A	N/A	N/A	12.000	U	0/7
Toxaphene	200.000	200.000	N/A	N/A	N/A	200.000	U	0/7
Trichloroethene	11.000	12.000	N/A	N/A	N/A	12.000	U	0/7
Vanadium	N/A	N/A	0.740	5.100	3.006	2.500	B	7/7
Vinyl chloride	11.000	12.000	N/A	N/A	N/A	12.000	U	0/7
Xylene (total)	11.000	12.000	N/A	N/A	N/A	12.000	U	0/7
Zinc	0.250	0.280	0.330	0.330	0.330	0.270	U	1/7
alpha-BHC	2.000	2.000	N/A	N/A	N/A	2.000	U	0/7
alpha-Chlordane	2.000	2.000	N/A	N/A	N/A	2.000	U	0/7
beta-BHC	2.000	2.000	N/A	N/A	N/A	2.000	U	0/7
bis(2-Chloroethoxy)methan	380.000	400.000	N/A	N/A	N/A	400.000	U	0/7
bis(2-Chloroethyl)ether	380.000	400.000	N/A	N/A	N/A	400.000	U	0/7
bis(2-Ethylhexyl)phthalat	380.000	400.000	N/A	N/A	N/A	400.000	U	0/7
cis-1,3-Dichloropropene	11.000	12.000	N/A	N/A	N/A	12.000	U	0/7
delta-BHC	2.000	2.000	N/A	N/A	N/A	2.000	U	0/7
gamma-BHC (Lindane)	2.000	2.000	N/A	N/A	N/A	2.000	U	0/7
gamma-Chlordane	2.000	2.000	N/A	N/A	N/A	2.000	U	0/7
trans-1,3-Dichloropropene	11.000	12.000	N/A	N/A	N/A	12.000	U	0/7

Background (Rest) Subsoils

Chem.name is chemical name
Min.dl is minimum reported detection level
Max.dl is maximum reported detection level
Min.lv is minimum level reported
Max.lv is maximum level reported
ADL.Avg is above detection level average value
Median is median of all values above and below detection level
Num.Det/Tot.Sample is number of detects / total number sampled

Chem.name	Min.dl	Max.dl	Min.lv	Max.lv	ADL.Avg	Median		Num.Det/Tot.Sample
1,1,1-Trichloroethane	10.000	25.000	N/A	N/A	N/A	11.000	U	0/11
1,1,2,2-Tetrachloroethane	10.000	25.000	N/A	N/A	N/A	11.000	U	0/11
1,1,2-Trichloroethane	10.000	25.000	N/A	N/A	N/A	11.000	U	0/11
1,1-Dichloroethane	10.000	25.000	N/A	N/A	N/A	11.000	U	0/11
1,1-Dichloroethene	10.000	25.000	N/A	N/A	N/A	11.000	U	0/11
1,2,4-Trichlorobenzene	340.000	400.000	N/A	N/A	N/A	370.000	U	0/11
1,2-Dichlorobenzene	340.000	400.000	N/A	N/A	N/A	370.000	U	0/11
1,2-Dichloroethane	10.000	25.000	N/A	N/A	N/A	11.000	U	0/11
1,2-Dichloroethene (total	10.000	25.000	N/A	N/A	N/A	11.000	U	0/11
1,2-Dichloropropane	10.000	25.000	N/A	N/A	N/A	11.000	U	0/11
1,3-Dichlorobenzene	340.000	400.000	N/A	N/A	N/A	370.000	U	0/11
1,4-Dichlorobenzene	340.000	400.000	N/A	N/A	N/A	370.000	U	0/11
2,2'-oxybis(1-Chloropropa	340.000	400.000	N/A	N/A	N/A	370.000	U	0/11
2,4,5-T	10.000	20.000	N/A	N/A	N/A	11.000	U	0/11
2,4,5-Trichlorophenol	850.000	1000.000	N/A	N/A	N/A	940.000	U	0/11
2,4,6-Trichlorophenol	340.000	400.000	N/A	N/A	N/A	370.000	U	0/11
2,4-D	51.000	100.000	N/A	N/A	N/A	57.000	U	0/11
2,4-DB	51.000	100.000	N/A	N/A	N/A	57.000	U	0/11
2,4-DP (Dichloroprop)	51.000	100.000	N/A	N/A	N/A	57.000	U	0/11
2,4-Dichlorophenol	340.000	400.000	N/A	N/A	N/A	370.000	U	0/11
2,4-Dimethylphenol	340.000	400.000	N/A	N/A	N/A	370.000	U	0/11
2,4-Dinitrophenol	850.000	1000.000	N/A	N/A	N/A	940.000	U	0/11
2,4-Dinitrotoluene	340.000	400.000	N/A	N/A	N/A	370.000	U	0/11
2,6-Dinitrotoluene	340.000	400.000	N/A	N/A	N/A	370.000	U	0/11
2-Butanone	10.000	25.000	N/A	N/A	N/A	11.000	U	0/11
2-Chloronaphthalene	340.000	400.000	N/A	N/A	N/A	370.000	U	0/11
2-Chlorophenol	340.000	400.000	N/A	N/A	N/A	370.000	U	0/11
2-Hexanone	10.000	25.000	N/A	N/A	N/A	11.000	U	0/11
2-Methylnaphthalene	340.000	400.000	N/A	N/A	N/A	370.000	U	0/11
2-Methylphenol	340.000	400.000	N/A	N/A	N/A	370.000	U	0/11
2-Nitroaniline	850.000	1000.000	N/A	N/A	N/A	940.000	U	0/11
2-Nitrophenol	340.000	400.000	N/A	N/A	N/A	370.000	U	0/11
3,3'-Dichlorobenzidine	340.000	400.000	N/A	N/A	N/A	370.000	U	0/11
3-Nitroaniline	850.000	1000.000	N/A	N/A	N/A	940.000	U	0/11
4,4'-DDD	3.400	17.000	N/A	N/A	N/A	3.800	U	0/11
4,4'-DDE	3.400	4.000	130.000	130.000	130.000	3.800	U	1/11
4,4'-DDT	3.400	4.000	87.000	87.000	87.000	3.800	U	1/11
4,6-Dinitro-2-methylpheno	850.000	1000.000	N/A	N/A	N/A	940.000	U	0/11
4-Bromophenyl-phenylether	340.000	400.000	N/A	N/A	N/A	370.000	U	0/11
4-Chloro-3-methylphenol	340.000	400.000	N/A	N/A	N/A	370.000	U	0/11
4-Chloroaniline	340.000	400.000	N/A	N/A	N/A	370.000	U	0/11
4-Chlorophenyl-phenylethe	340.000	400.000	N/A	N/A	N/A	370.000	U	0/11
4-Methyl-2-pentanone	10.000	25.000	N/A	N/A	N/A	11.000	U	0/11
4-Methylphenol	340.000	400.000	N/A	N/A	N/A	370.000	U	0/11
4-Nitroaniline	850.000	1000.000	N/A	N/A	N/A	940.000	U	0/11
4-Nitrophenol	850.000	1000.000	N/A	N/A	N/A	940.000	U	0/11
Acenaphthene	340.000	400.000	N/A	N/A	N/A	370.000	U	0/11
Acenaphthylene	340.000	400.000	N/A	N/A	N/A	370.000	U	0/11
Acetone	8.000	23.000	N/A	N/A	N/A	11.000	U	0/11
Aldrin	1.700	8.700	N/A	N/A	N/A	2.000	U	0/11
Aluminum	N/A	N/A	11.700	3110.000	869.155	370.000		11/11
Anthracene	340.000	400.000	N/A	N/A	N/A	370.000	U	0/11
Antimony	4.900	5.800	N/A	N/A	N/A	5.400	U	0/11
Aroclor-1016	34.000	170.000	N/A	N/A	N/A	38.000	U	0/11
Aroclor-1221	68.000	340.000	N/A	N/A	N/A	77.000	U	0/11
Aroclor-1232	34.000	170.000	N/A	N/A	N/A	38.000	U	0/11
Aroclor-1242	34.000	170.000	N/A	N/A	N/A	38.000	U	0/11
Aroclor-1248	34.000	170.000	N/A	N/A	N/A	38.000	U	0/11
Aroclor-1254	34.000	170.000	N/A	N/A	N/A	38.000	U	0/11
Aroclor-1260	34.000	170.000	N/A	N/A	N/A	38.000	U	0/11

Arsenic	0.300	0.450	0.370	0.780	0.574	0.430	U	5/11
Barium	N/A	N/A	0.120	8.700	1.515	0.510	B	11/11
Benzene	10.000	25.000	N/A	N/A	N/A	11.000	U	0/11
Benzo(a)anthracene	340.000	400.000	N/A	N/A	N/A	370.000	U	0/11
Benzo(a)pyrene	340.000	400.000	N/A	N/A	N/A	370.000	U	0/11
Benzo(b)fluoranthene	340.000	400.000	N/A	N/A	N/A	370.000	U	0/11
Benzo(g,h,i)perylene	340.000	400.000	N/A	N/A	N/A	370.000	U	0/11
Benzo(k)fluoranthene	340.000	400.000	N/A	N/A	N/A	370.000	U	0/11
Beryllium	0.040	0.050	N/A	N/A	N/A	0.050	U	0/11
Bromodichloromethane	10.000	25.000	N/A	N/A	N/A	11.000	U	0/11
Bromoform	10.000	25.000	N/A	N/A	N/A	11.000	U	0/11
Bromomethane	10.000	25.000	N/A	N/A	N/A	11.000	U	0/11
Butylbenzylphthalate	340.000	400.000	N/A	N/A	N/A	370.000	U	0/11
Cadmium	0.430	0.510	0.510	0.890	0.753	0.500	U	3/11
Calcium	N/A	N/A	8.100	141.000	57.491	42.000	B	11/11
Carbazole	340.000	400.000	N/A	N/A	N/A	370.000	U	0/11
Carbon disulfide	10.000	25.000	N/A	N/A	N/A	11.000	U	0/11
Carbon tetrachloride	10.000	25.000	N/A	N/A	N/A	11.000	U	0/11
Chlorobenzene	10.000	25.000	N/A	N/A	N/A	11.000	U	0/11
Chloroethane	10.000	25.000	N/A	N/A	N/A	11.000	U	0/11
Chloroform	10.000	25.000	N/A	N/A	N/A	11.000	U	0/11
Chloromethane	10.000	25.000	N/A	N/A	N/A	11.000	U	0/11
Chromium	0.460	0.460	0.460	6.200	1.834	1.100	B	10/11
Chrysene	340.000	400.000	N/A	N/A	N/A	370.000	U	0/11
Cobalt	0.530	0.630	0.780	0.780	0.780	0.590	U	1/11
Copper	0.310	0.360	0.350	0.760	0.526	0.360	U	5/11
Dalapon	100.000	200.000	N/A	N/A	N/A	110.000	U	0/11
Di-n-butylphthalate	340.000	380.000	420.000	700.000	560.000	380.000	U	5/11
Di-n-octylphthalate	340.000	400.000	170.000	170.000	170.000	370.000	U	1/11
Dibenz(a,h)anthracene	340.000	400.000	N/A	N/A	N/A	370.000	U	0/11
Dibenzofuran	340.000	400.000	N/A	N/A	N/A	370.000	U	0/11
Dibromochloromethane	10.000	25.000	N/A	N/A	N/A	11.000	U	0/11
Dicamba	10.000	20.000	N/A	N/A	N/A	11.000	U	0/11
Dieldrin	3.400	17.000	N/A	N/A	N/A	3.800	U	0/11
Diethylphthalate	340.000	400.000	N/A	N/A	N/A	370.000	U	0/11
Dimethylphthalate	340.000	400.000	N/A	N/A	N/A	370.000	U	0/11
Dinoseb	10.000	20.000	N/A	N/A	N/A	11.000	U	0/11
Endosulfan I	1.700	8.700	N/A	N/A	N/A	2.000	U	0/11
Endosulfan II	3.400	17.000	N/A	N/A	N/A	3.800	U	0/11
Endosulfan sulfate	3.400	17.000	N/A	N/A	N/A	3.800	U	0/11
Endrin	3.400	17.000	N/A	N/A	N/A	3.800	U	0/11
Endrin aldehyde	3.400	17.000	N/A	N/A	N/A	3.800	U	0/11
Endrin ketone	3.400	17.000	N/A	N/A	N/A	3.800	U	0/11
Ethylbenzene	10.000	25.000	N/A	N/A	N/A	11.000	U	0/11
Fluoranthene	340.000	400.000	N/A	N/A	N/A	370.000	U	0/11
Fluorene	340.000	400.000	N/A	N/A	N/A	370.000	U	0/11
Heptachlor	1.700	8.700	N/A	N/A	N/A	2.000	U	0/11
Heptachlor epoxide	1.700	8.700	N/A	N/A	N/A	2.000	U	0/11
Hexachlorobenzene	340.000	400.000	N/A	N/A	N/A	370.000	U	0/11
Hexachlorobutadiene	340.000	400.000	N/A	N/A	N/A	370.000	U	0/11
Hexachlorocyclopentadiene	340.000	400.000	N/A	N/A	N/A	370.000	U	0/11
Hexachloroethane	340.000	400.000	N/A	N/A	N/A	370.000	U	0/11
Indeno(1,2,3-cd)pyrene	340.000	400.000	N/A	N/A	N/A	370.000	U	0/11
Iron	N/A	N/A	3.800	400.000	131.773	76.600		11/11
Isophorone	340.000	400.000	N/A	N/A	N/A	370.000	U	0/11
Lead	0.190	0.260	0.320	8.500	1.963	0.480	B	9/11
MCPA	5100.000	12000.000	N/A	N/A	N/A	5700.000	U	0/11
MCPP	5100.000	12000.000	N/A	N/A	N/A	5700.000	U	0/11
Magnesium	4.300	4.500	4.500	33.700	16.389	11.800	B	9/11
Manganese	0.160	0.160	0.210	1.700	0.734	0.530	B	10/11
Mercury	0.010	0.010	0.010	0.030	0.018	0.010	B	6/11
Methoxychlor	17.000	87.000	N/A	N/A	N/A	20.000	U	0/11
Methylene chloride	2.000	25.000	N/A	N/A	N/A	11.000	U	0/11
N-Nitroso-di-n-propylamin	340.000	400.000	N/A	N/A	N/A	370.000	U	0/11
N-Nitrosodiphenylamine (1	340.000	400.000	N/A	N/A	N/A	370.000	U	0/11
Naphthalene	340.000	400.000	N/A	N/A	N/A	370.000	U	0/11
Nickel	1.900	2.200	N/A	N/A	N/A	2.000	U	0/11
Nitrobenzene	340.000	400.000	N/A	N/A	N/A	370.000	U	0/11
Pentachlorophenol	850.000	1000.000	N/A	N/A	N/A	940.000	U	0/11
Phenanthrene	340.000	400.000	N/A	N/A	N/A	370.000	U	0/11
Phenol	340.000	400.000	N/A	N/A	N/A	370.000	U	0/11
Potassium	69.100	81.800	92.400	92.400	92.400	78.000	U	1/11

Pyrene	340.000	400.000	N/A	N/A	N/A	370.000 U	0/11
Selenium	0.400	0.470	0.530	0.800	0.627	0.450 U	3/11
Silver	0.450	0.530	N/A	N/A	N/A	0.500 U	0/11
Silvex (2,4,5-TP)	10.000	20.000	N/A	N/A	N/A	11.000 U	0/11
Sodium	6.200	7.300	N/A	N/A	N/A	6.800 U	0/11
Styrene	10.000	25.000	N/A	N/A	N/A	11.000 U	0/11
Tetrachloroethene	10.000	25.000	N/A	N/A	N/A	11.000 U	0/11
Thallium	0.270	0.310	N/A	N/A	N/A	0.300 U	0/11
Toluene	5.000	25.000	2.000	2.000	2.000	11.000 U	1/11
Toxaphene	170.000	870.000	N/A	N/A	N/A	200.000 U	0/11
Trichloroethene	10.000	25.000	N/A	N/A	N/A	11.000 U	0/11
Vanadium	0.510	0.600	0.660	2.800	1.720	0.580 U	3/11
Vinyl chloride	10.000	25.000	N/A	N/A	N/A	11.000 U	0/11
Xylene (total)	10.000	25.000	N/A	N/A	N/A	11.000 U	0/11
Zinc	0.250	0.270	0.240	5.100	1.195	0.270 U	6/11
alpha-BHC	1.700	8.700	N/A	N/A	N/A	2.000 U	0/11
alpha-Chlordane	1.700	2.100	43.000	43.000	43.000	2.000 U	1/11
beta-BHC	1.700	8.700	N/A	N/A	N/A	2.000 U	0/11
bis(2-Chloroethoxy)methan	340.000	400.000	N/A	N/A	N/A	370.000 U	0/11
bis(2-Chloroethyl)ether	340.000	400.000	N/A	N/A	N/A	370.000 U	0/11
bis(2-Ethylhexyl)phthalat	340.000	400.000	390.000	390.000	390.000	370.000 U	1/11
cis-1,3-Dichloropropene	10.000	25.000	N/A	N/A	N/A	11.000 U	0/11
delta-BHC	1.700	8.700	N/A	N/A	N/A	2.000 U	0/11
gamma-BHC (Lindane)	1.700	8.700	N/A	N/A	N/A	2.000 U	0/11
gamma-Chlordane	1.700	2.100	43.000	43.000	43.000	2.000 U	1/11
trans-1,3-Dichloropropene	10.000	25.000	N/A	N/A	N/A	11.000 U	0/11