N65928.AR.002762
NTC ORLANDO
5090.3a

BASE REALIGNMENT AND CLOSURE ENVIRONMENTAL SITE SCREENING FOR STUDY AREA 55 NTC ORLANDO FL

1/1/1999

HARDING LAWSON ASSOCIATES

123

BASE REALIGNMENT AND CLOSURE ENVIRONMENTAL SITE SCREENING REPORT

STUDY AREA 55

NAVAL TRAINING CENTER ORLANDO, FLORIDA

Unit Identification Code: N65928

Contract No.: N62467-89-D-0317/107

Prepared by:

Harding Lawson Associates
2590 Executive Center Circle, East
Tallahassee, Florida 32301

Prepared for:

Department of the Navy, Southern Division
Naval Facilities Engineering Command
2155 Eagle Drive
North Charleston, South Carolina 29418

Barbara Nwokike, Code 1873, Engineer-in-Charge

January 1999

CERTIFICATION OF TECHNICAL
DATA CONFORMITY (MAY 1987)

The Contractor, Harding Lawson Associates, hereby certifies that, to the best of its knowledge and belief, the technical data delivered herewith under Contract No. N62467-89-D-0317/107 are complete and accurate and comply with all requirements of this contract.

DATE: January 11, 1999

NAME AND TITLE OF CERTIFYING OFFICIAL: John Kaiser
Task Order Manager

NAME AND TITLE OF CERTIFYING OFFICIAL: Richard Allen
Project Technical Lead

(DFAR 252.227-7036)

NTC-ESSR.S55
SAS.01.99

TABLE OF CONTENTS

Base Realignment and Closure
Environmental Site Screening Report
Study Area 55
Naval Training Center
Orlando, Florida

Chapter	Title	Page No.
1.0	STUDY AREA 55, BUILDING 1104	1-1
1.1	BACKGROUND AND CONDITIONS	1-1
1.2	SITE SCREENING INVESTIGATION SUMMARY	1-1
1.2.1	FIELD PROGRAM	1-4
1.2.1.1	Surface Soil Sampling for Immunoassay (IA) Analysis	1-4
1.2.1.2	Surface Soil Sampling	1-4
1.2.1.3	Groundwater Monitoring Well Installation and Sampling	1-4
1.2.1.4	Wipe Samples	1-4
1.3	SA 55 RESULTS	1-5
1.3.1	IA Analytical Results	1-5
1.3.2	Surface Soil Analytical Results	1-5
1.3.3	Groundwater Analytical Results	1-5
1.3.4	Wipe Sample Analytical Results	1-5
1.4	SA 55, CONCLUSIONS AND RECOMMENDATIONS	1-5

REFERENCES

APPENDICES

Appendix A: Sampling Plan for Building 104, Area C, Naval Training Center, Orlando

Appendix B: Monitoring Well Construction Diagram, Groundwater Sampling Field Data Sheet, and Surface Soil Sample Field Data

Appendix C: Summary of Detections Tables

Appendix D: Summary of Analytical Results Tables

LIST OF FIGURES

Base Realignment and Closure
Environmental Site Screening Report
Study Area 55
Naval Training Center
Orlando, Florida

Figure	Title	Page No.
1	Location of Study Area 55	1-2
2	Study Area 55, Wipe Sample, Surface Soil, Soil Boring, and Monitoring Well Locations, Building 1104, Area C	1-3

GLOSSARY

ABB-ES	ABB Environmental Services, Inc.
bls	below land surface
CLP	Contract Laboratory Program
DQO	data quality objective
EBS	Environmental Baseline Survey
FDEP	Florida Department of Environmental Protection
HLA	Harding Lawson Associates
IA	immunoassay
µg/kg	micrograms per kilogram
mg/kg	milligrams per kilogram
NTC	Naval Training Center
PCB	polychlorinated biphenyl
RBC	risk-based concentration
SA	Study Area
SCTL	soil cleanup target level
SVOC	semivolatile organic compound
TAL	target analyte list
TCL	target compound list
USEPA	U.S. Environmental Protection Agency

1.0 STUDY AREA 55, BUILDING 1104

This report contains information gathered during site screening activities conducted at Study Area (SA) 55. Harding Lawson Associates (HLA) presented recommended field activities to the Orlando Partnering Team during the June meeting in Atlanta, and HLA submitted a sampling plan for Building 1104 to the Navy on June 22, 1998 (Appendix A). Site screening field activities were completed on August 11 and 12, 1998.

1.1 BACKGROUND AND CONDITIONS. SA 55 is part of Area C, Naval Training Center (NTC), Orlando, Florida (Figure 1). Building 1104 was constructed in 1982 for storage of polychlorinated biphenyl (PCB)-laden oil and other waste and hazardous materials. This 12-foot by 12-foot building is constructed of painted cinderblock on a sealed concrete slab with a 6-inch-high continuous curb around the perimeter of the floor and is placarded for PCB storage. The north side of the building abuts the asphalt-paved parking area south of Sea Bee Street (Figure 2). Access is through an overhead door on the north side of the building. The areas adjacent to the south, west, and east sides of the building are maintained lawn. A review of aerial photographs indicates that the site was unimproved lawn before the building was constructed.

The NTC, Orlando Public Works Department interviewed base workers who were familiar with the operation of Building 1104. According to the personnel interviewed, drums stored outside Building 1104 were placed on pallets in the asphalt-paved area north of the building. Several drum pallets were observed during the Environmental Baseline Survey (EBS) (ABB Environmental Services, Inc. [ABB-ES], 1994). Storage practices at Building 1104, specifically storage of drums containing non-PCB-laden oil outside the building, were cited in a base outfall survey, but no releases were reported at that time. No documented spills are associated with storage operations at this facility.

The initial site screening investigation at Area C did not include Building 1104 because the building still contained hazardous materials at the time of the screening investigations in 1994 and 1995. The facility had a label on the door stating that PCBs were stored within. Several drums with unidentified contents were located inside the facility at the time of the EBS. No documented spills were associated with storage operations at this facility and no further action was recommended.

At the time of the initial site walkover prior to the present investigation, granular spill absorbent material was observed in the grass area at several points around the perimeter of the building. A source at NTC, Orlando Public Works indicated that several bags of absorbent material had been damaged by rodents, and that some of the loose material may have been spilled in the grassy area.

1.2 SITE SCREENING INVESTIGATION SUMMARY. The site screening investigation was conducted to evaluate environmental media that may have been exposed to hazardous material released at the site. Past site practices and current site conditions were used to determine sampling locations.

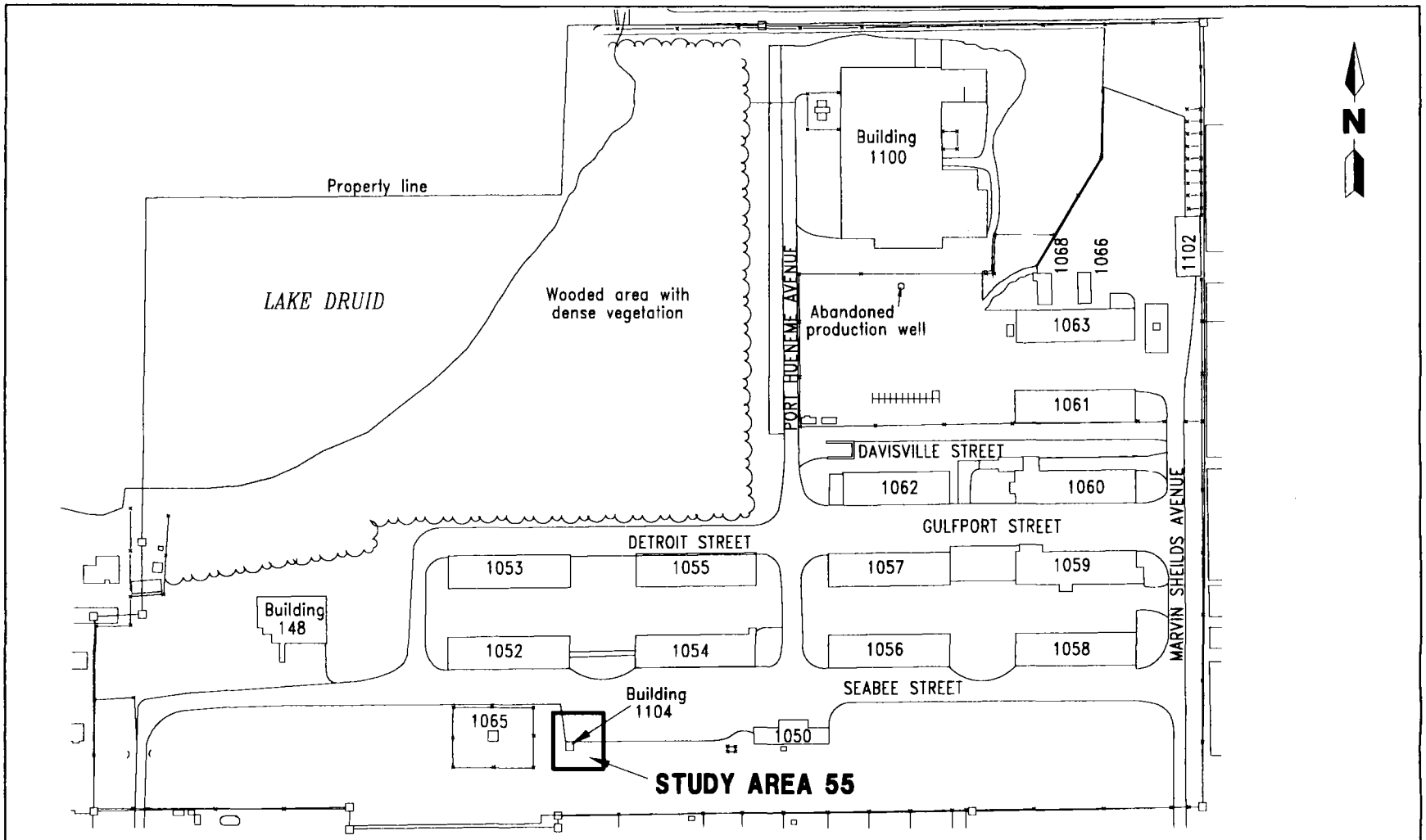

0 125 250
SCALE: 1 INCH = 250 FEET

K:\02530\02530-09\SSR\02530780.DWG DEL-VC 09/16/98 AutoCAD R14

FIGURE 1
LOCATION OF STUDY AREA 55

BASE REALIGNMENT AND CLOSURE
ENVIRONMENTAL SITE
SCREENING REPORT
STUDY AREA 55
NAVAL TRAINING CENTER
ORLANDO, FLORIDA

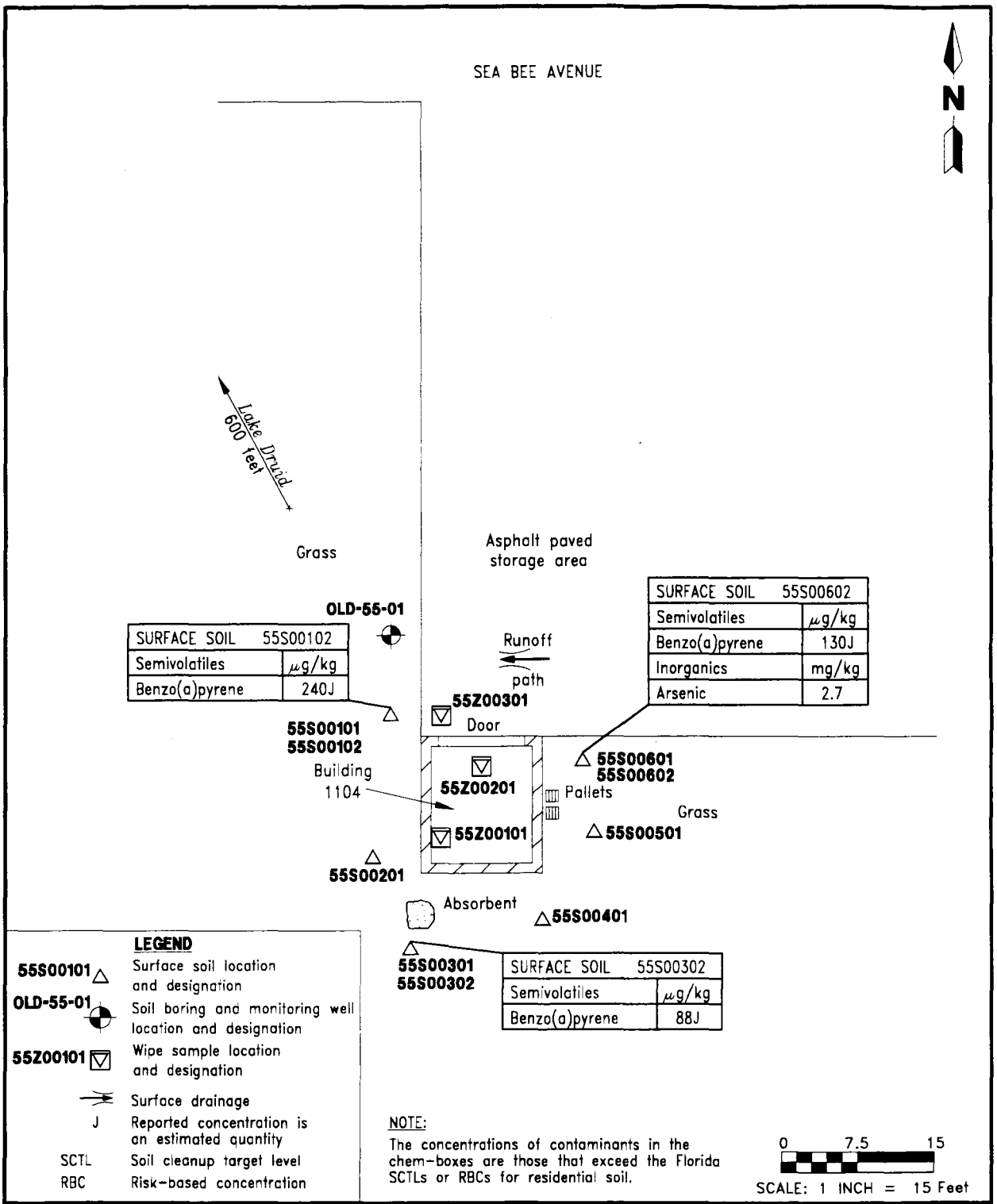

FIGURE 2
STUDY AREA 55
WIPE SAMPLE, SURFACE SOIL, SOIL BORING, AND MONITORING WELL LOCATIONS
BUILDING 1104, AREA C

K:\02530\02530-09\SSR\025307B1.DWG, VC-BB 11/16/98 09:47:08, AutoCAD R14

BASE REALIGNMENT AND CLOSURE
ENVIRONMENTAL SITE SCREENING REPORT
STUDY AREA 55
NAVAL TRAINING CENTER
ORLANDO, FLORIDA

1.2.1 FIELD PROGRAM. Areas of environmental interest include the lawn area around Building 1104, which could potentially have received spills or runoff from storage areas near the building, from the interior of the building where various materials were stored, and from the paved area immediately north of the building, which was also used for storage. The potential handling and storage of PCBs or PCB-contaminated materials at the site were also considered when sampling locations and analyses were selected.

1.2.1.1 Surface Soil Sampling for Immunoassay (IA) Analysis Six surface soil samples were collected from the grass area adjacent to Building 1104, two each on the west, south, and east sides of the building. One of the samples from the west side of the building was collected from the area receiving runoff from the loading door area on the north side of Building 1104. Each surface soil sample was collected from 0 to 1 foot below land surface (bls).

The soil samples were field screened for total PCBs with IA field kits using U.S. Environmental Protection Agency (USEPA) Method 4020. IA analysis was conducted in accordance with USEPA Level II data quality objectives (DQOs).

1.2.1.2 Surface Soil Sampling Three surface soil samples were collected at locations around the perimeter of Building 1104. One soil sample, 55S00102, was collected at the northwest corner of the building, in the storm water runoff path from the paved area. Another sample, 55S00302, was collected near the southwest corner of the building, where an accumulation of absorbent material was noted in the grass. The third sample, 55S00602, was collected near the northeast corner of the building, near an area where pallets were stored.

Surface soil samples for each location were submitted to an approved laboratory for full suite Contract Laboratory Program (CLP) target analyte list (TAL) and target compound list (TCL) laboratory analysis plus pesticides and PCBs, in accordance with USEPA Level IV DQOs.

1.2.1.3 Groundwater Monitoring Well Installation and Sampling One microwell, OLD-55-01, was installed during the site screening investigation (Figure 2). The selected location was anticipated to be downgradient of Building 1104, and was placed in an area that receives runoff from the asphalt-paved area next to the building. The soil boring for the microwell installation was advanced approximately 13 feet into the surficial aquifer. The screened interval for the microwell bracketed the water table, which was encountered at 8 feet bls during the investigation.

A groundwater sample was collected from the microwell using the low-flow sampling method (ABB-ES, 1997). The groundwater sample was submitted to an approved laboratory for full suite CLP TAL and TCL laboratory analysis plus pesticides and PCBs, in accordance with USEPA Level IV DQOs. The monitoring well installation diagram and field sample data are included in Appendix B.

1.2.1.4 Wipe Samples Three surface wipe samples were collected at the site. Two were collected from the concrete floor surface inside Building 1104. One location was in the southwest corner where rust stains from drum storage were observed. The other sample collected from inside Building 1104 was located at the northern end, adjacent to the containment curb across the doorway. The third sample was collected from the asphalt pavement in front of the loading door on

the north side of the building in the path of surface runoff from the paved storage area.

The samples from each location were submitted to an approved laboratory to be analyzed for TCL PCBs in accordance with USEPA level IV DQOs.

1.3 SA 55 RESULTS. The analytical results of the surface soil samples collected during the site screening investigation were evaluated by comparing the concentration of the various compounds detected to screening criteria, including basewide soil background screening levels, Florida Department of Environmental Protection's (FDEP's) Soil Cleanup Target Levels (SCTLs), and USEPA Region III Risk-Based Concentrations (RBCs). The nature and location of the exceedances of screening criteria are presented on Figure 2 and are discussed below.

Groundwater analytical data are compared to background screening values, FDEP Groundwater Cleanup Target Levels, Federal maximum contaminant levels, and USEPA Region III RBCs for tap water.

Analytical results from the media sampled at SA 55 are presented as Summary of Detections Tables in Appendix C. A complete set of analytical results is presented in Appendix D. Exceedances of background or regulatory guidance concentrations (shaded on the positive hits tables) are displayed in chemical boxes near their respective explorations on Figure 2.

1.3.1 IA Analytical Results Of the seven IA analyses conducted, only one of the samples tested, 55S00101D, had a positive response for PCBs (Appendix C-1). This test was a duplicate analysis of the extraction from 55S00101, which was below detection limits. Therefore, this result is interpreted as a false positive.

1.3.2 Surface Soil Analytical Results Analysis of the surface soil collected at SA 55 detected semivolatile organic compounds (SVOCs), metals, and pesticides (Appendix C-2). Arsenic was detected in the three surface soil samples (55S00102, 55S00302, and 55S00602) at concentrations of 0.96B, 0.97B, and 2.7 milligrams per kilogram (mg/kg), respectively. The SCTL for residential soil is 0.8 mg/kg for arsenic, and the established background screening concentration for NTC, Orlando is 1.0 mg/kg. The SCTL for industrial soil is 3.7 mg/kg for arsenic. Therefore, no arsenic concentrations exceed State or Federal industrial screening concentrations.

Benzo(a)pyrene was detected in the three surface soil samples (55S00102, 55S00302, and 55S00602) at concentrations of 240J, 88J, and 130J micrograms per kilogram (μg/kg), respectively. The SCTL for residential soil is 100 μg/kg for benzo(a)-pyrene, and the SCTL for industrial soil is 500 μg/kg. Therefore, no benzo(a)-pyrene concentrations exceed State or Federal industrial screening concentrations.

1.3.3 Groundwater Analytical Results Analysis of the groundwater collected at SA 55 detected several metals (Appendix C-3). None of the analytes detected were at concentrations exceeding their respective screening criteria or Florida groundwater guidance concentrations.

1.3.4 Wipe Sample Analytical Results PCB concentrations were below detection limits in the wipe samples collected at SA 55 (Appendix D-3).

1.4 SA 55, CONCLUSIONS AND RECOMMENDATIONS. Based on available information and site screening data, it is concluded that past site practices have had minimal impact on environmental media at SA 55. Subsurface soil and groundwater did not have any detections of compounds above screening criteria and only two compounds were detected in surface soil at concentrations above residential screening criteria.

Arsenic was detected in the three surface soil samples (55S00102, 55S00302, and 55S00602) at concentrations ranging from 0.96B to 2.7 mg/kg. Benzo(a)pyrene was detected in the same three surface soil samples at concentrations ranging from 88 to 240 μg/kg. In some cases, these concentrations exceed the residential SCTL and residential RBC, but they do not exceed either industrial standard. This area of the base has been developed and urbanized since the base was established. SVOCs, including benzo(a)pyrene, are not uncommon in urban areas where petroleum products have been used.

Because the intended reuse of this parcel is industrial, and the arsenic and benzo(a)pyrene detections in surface soil were below industrial screening criteria, HLA recommends that SA 55 be made eligible for transfer, with the provision that the area be restricted to nonresidential use. HLA further recommends that the site be reclassified from 7/Gray to 4/Dark Green.

The undersigned members of the Orlando Partnering Team concur with the findings and recommendations of the preceding investigation.

STUDY AREA 55

Nancy Rodriguez	1-21-99
U.S. Environmental Protection Agency, Region IV	Date
David L. Hall	1/21/99
Florida Department of Environmental Protection	Date
Wayne J. Howell	1-21-99
U.S. Department of the Navy	Date

REFERENCES

ABB Environmental Services, Inc. (ABB-ES). 1994. *Base Realignment and Closure Environmental Baseline Survey Report, Naval Training Center, Orlando, Florida*. Prepared for Southern Division, Naval Facilities Engineering Command (SOUTHNAVFACENGCOM), North Charleston, South Carolina.

ABB-ES. 1997. *Project Operations Plan for Site Investigations and Remedial Investigations, Volumes I and II, Naval Training Center, Orlando, Florida*. Prepared for SOUTHNAVFACENGCOM, North Charleston, South Carolina.

APPENDIX A

SAMPLING PLAN FOR BUILDING 1104
AREA C
NAVAL TRAINING CENTER, ORLANDO

Harding Lawson Associates

Document No.: 02530a.101

June 22, 1998

Commanding Officer
SOUTHNAVFACENGCOM
ATTN: Ms. Barbara Nwokike, Code 1873
PO Box 190010
2155 Eagle Drive
N. Charleston, SC 29419-9010

Dear Barbara:

Subject: Sampling Plan for Building 1104
Area C

HLA has completed a work plan for a limited site screening program at Building 1104, Area C to determine whether or not there are any contaminants present at concentrations of concern. Based on comments at the OPT meeting in Atlanta last week, minor revisions were suggested, and they have been incorporated into this document.

HISTORY OF BUILDING 1104. The EBS describes Building 1104 as a small painted cinderblock storage facility constructed in 1982 for storage of Polychlorinated Biphenyl (PCB) laden oil and other waste and hazardous materials. This 12-foot by 12-foot building is constructed of painted cinderblock on a concrete slab with a gabled roof. A review of aerial photographs indicates that the site was unimproved lawn at Area C until the building was constructed. Several drum pallets were observed during the Environmental Baseline Survey (EBS). The building was cited by the base outfall survey for storing drums of non-PCB laden oil outside the building, but no leaks were reported. The building, however, may have stored PCB-laden oil. No documented spills are associated with storage operations at this facility.

The initial site screening investigation at Area C did not include Building 1104 since at the time of the screening investigations in 1994 and 1995, the building still contained hazardous materials. The facility had a label on the door stating PCBs were stored within. Located inside the facility were several drums with unidentified contents. No further action was recommended during the EBS.

SITE SCREENING INVESTIGATION. HLA recommends that the analytical suite include compounds other than PCBs because the building, according to the EBS, contained "hazardous materials" in addition to PCB-laden oil. Accordingly, HLA recommends the following site screening activities:

- Use information collected from former workers (provided by Public Works) to determine where drums may have been stored outside Building 1104.
- Collect two PCB wipe samples of the floor inside the building, concentrating on any stained areas.
- Collect one PCB wipe sample from the asphalt surface outside (north of) the building, but only if there is a stained area near the building entrance.

Engineering and
Environmental Services 1536 Kingsley Avenue, Suite 127, Orange Park, FL 32073 904/269-7012 Fax: 904/264-5632

- Collect two surface soil samples (0 to 1 foot bls) from west, south, and east sides of Building 1104 and analyze in the field with PCB immunoassay (IA) test kits. Samples will be biased toward former drum storage areas (determined from information provided by Public Works), most likely potential spill areas or preferential surface water flow.
- If there are IA detections of PCBs, collect up to three samples for full suite laboratory analysis, in accordance with the new soil sampling guidance for volatiles analysis (SW 846-5035).
- If there are no IA detections, collect one or two surface soil samples for full suite laboratory analysis, with location(s) biased toward former drum storage areas, most likely potential spill areas, or preferential surface water flow.
- Install one microwell downgradient from Building 1104 (west or northwest of building toward Lake Druid) and submit groundwater sample for full suite laboratory analysis.

Please call me if you have any questions.

Very Truly Yours,

HARDING LAWSON ASSOCIATES

Rick Allen

Richard P. Allen
Principal Scientist

cc: W. Hansel (SouthDiv)
J. Mitchell (FDEP)
N. Rodriguez (EPA)
Lt. G. Whipple (SouthDiv)
S. McCoy (Tetra Tech)
B. Cohose (Bechtel)
File

APPENDIX B

MONITORING WELL CONSTRUCTION DIAGRAM, GROUNDWATER SAMPLING FIELD DATA SHEET, AND SURFACE SOIL SAMPLE FIELD DATA

MICROWELL CONSTRUCTION DIAGRAM

PROJECT: NTC ORLANDO
PROJECT NO: 02530.05
WELL ID: OLD-55-01
FIELD PERSONNEL: WDO & PVC

SITE NAME: SA55
DATE INSTALLED: 8-11/98
INSTALLATION METHOD: HA/2" casing

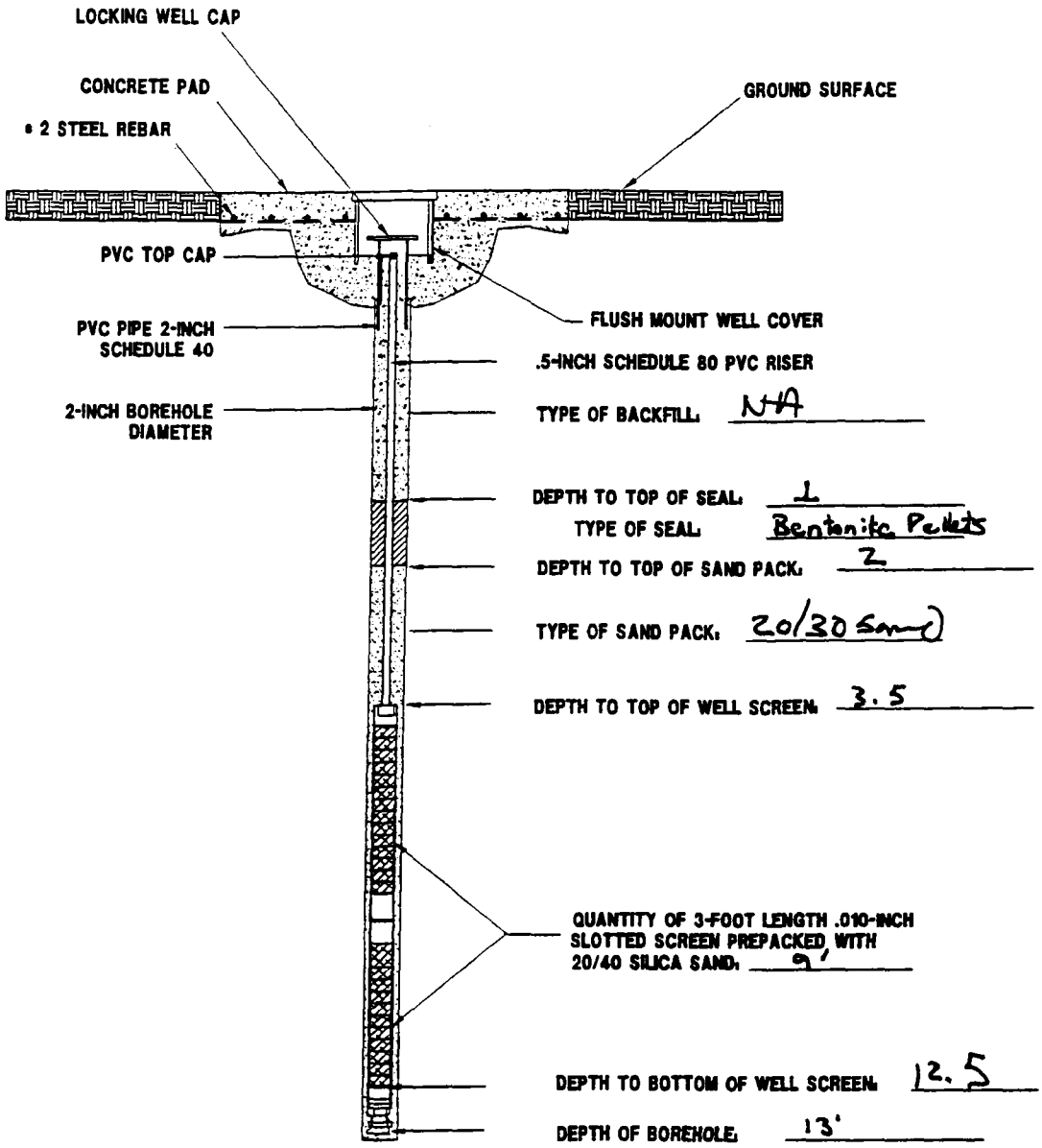

NOT TO SCALE

GROUNDWATER SAMPLE FIELD DATA

Project: NTC ORLANDO
Project Number: 02530.09
Sample Location ID: OLD-55-01
Time: Start: 1310 End: 1510

Point of Interest: SA55
Date: 8-12/98
Signature of Sampler: [illegible]

Water Level/Well Data

Well Depth 13.90 ft. — X Measured / ___ Historical

X Top of Well / ___ Top of Protective Casing

Well Riser Stick-up (from ground) FM ft.

Protective Casing/Well Difference — ft.

Protective Casing — ft.

Depth to Water 8.60 ft.

Well Material: X PVC / X SS

Well Locked?: X Yes / ___ No

Well Dia. ___ 2 inch / ___ 4 inch / ___ 6 inch / X 1/2"

Water Level Equip. Used: X Elect. Cond. Probe / ___ Float Activated / ___ Press. Transducer

Height of Water Column 5.30 ft. X ___ 16 Gal/ft. (2 in.) / ___ 65 Gal/ft. (4 in.) / ___ 1.5 Gal/ft. (6 in.) / 0.05 Gal/ft. (1/2 in.) = 0.053 Gal/Vol

3.2 Total Gal Purged

Well Integrity:	Yes	No
Prot. Casing Secure	✓	
Concrete Collar Intact	✓	
Other	✓	

Equipment Documentation

Purging/Sampling Equipment Used:

(✓ If Used For) Purging	Sampling		Equipment ID
X	X	Peristaltic Pump	
		Submersible Pump	
		Bailer	
		PVC/Silicon Tubing	
X	X	Teflon/Silicon Tubing	
		Airlift	
		Hand Pump	
		In-line Filter	
		Press/Vac Filter	

Decontamination Fluids Used:

(✓ All That Apply at Location)

- ___ Methanol (100%)
- ___ 25% Methanol/75% ASTM Type II water
- ___ Deionized Water
- ___ Liquinox Solution
- ___ Hexane
- ___ HNO_3/D.I. Water Solution
- ___ Potable Water
- X None

Field Analysis Data

Ambient Air VOC NR ppm Well Mouth NR ppm

Field Data Collected: ___ In-line / X In Container

Sample Observations: ___ Turbid / X Clear / ___ Cloudy / ___ Colored / ___ Odor

Purge Data	@ 1.5 Gal.	@ 2.2 Gal.	@ 2.5 Gal.	@ 3.0 Gal.	@ 3.2 Gal.
Temperature, Deg. C	28	29	30.2	29.6	29.5
pH, units	6.38	5.81	6.51	6.53	6.66
Specific Conductivity	100	120	130	117	115
~~(umhos/cm @ 25 Deg. C)~~ NTU	42.0	14.6	57.6	4.3	6.4
~~Oxidation-Reduction, mv~~					
~~Dissolved Oxygen, ppm~~					

Sample Collection Requirements (✓ If Required at this Location)

Analytical Parameter	✓ If Field Filtered	Preservation Method	Volume Required	✓ If Sample Collected	Sample Bottle IDs
VOA		HCL			/ / /
SVOA		4°C			/ / /
Pest/PCB		4°C			/ / /
Inorganics		HNO_3			/ / /
Explosives		4°C			/ / /
TPH		H_2SO_4			/ / /
TOC		H_2SO_4			/ / /
Nitrate		H_2SO_4			/ / /

Notes:

55G0010L
3x 40ml w/HCL = 524.2 VOC
2x 1l amber = SVOC
2x 1l amber = Pest/PCB
1x 1l Poly w/HNO_3 = TAL METALS

SURFACE SOIL SAMPLE FIELD DATA RECORD

Project: NTC ORLANDO
Project Number: 02530.09
Sample Location ID: 55500101
Time: Start: 1432 End: 1440

Site: SA55
Date: 8-11/98
Signature of Sampler: William D. Olsen

SOIL SAMPLE

DEPTH OF SAMPLE 0 - 1'

EQUIPMENT USED FOR COLLECTION:
- [X] HAND AUGER
- [ ] S.S. SPLIT SPOON
- [ ] SHOVEL
- [ ] HAND SPOON
- [ ] ALUMINUM PANS
- [ ] SS BUCKET
- [ ] _____

TYPE OF SAMPLE COLLECTED:
- [X] DISCRETE
- [ ] COMPOSITE

SAMPLE OBSERVATIONS:
- [ ] ODOR _____
- [X] COLOR Brown
- [X] Coal or Asphalt lumps

DECONTAMINATION FLUIDS USED:
- ✓ ALL USED
- [ ] ETHYL ALCOHOL
- [ ] 25% METHANOL/75% ASTM TYPE II WATER
- [ ] DEIONIZED WATER
- [ ] LIQUINOX SOLUTION
- [ ] HEXANE
- [ ] HNO_3 SOLUTION
- [ ] POTABLE WATER
- [ ] NONE

SOIL TYPE:
- [ ] CLAY
- [X] SAND
- [ ] ORGANIC
- [ ] GRAVEL

FIELD QC DATA: [X] FIELD DUPLICATE COLLECTED
DUPLICATE ID 55500101D

SAMPLE LOCATION SKETCH:
- [X] YES
- [ ] NO

SAMPLES COLLECTED

✓ IF REQUIRED AT THIS LOCATION	MATRIX: SURFACE WATER	MATRIX: SEDIMENT	✓ IF PRESERVED WITH ACID-BASE	VOLUME REQUIRED	✓ IF SAMPLE COLLECTED	SAMPLE BOTTLE IDS
[ ]	[ ]	[ ]	[ ]		[ ]	/ / /
[ ]	[ ]	[ ]	[ ]		[ ]	/ / /
[ ]	[ ]	[ ]	[ ]		[ ]	/ / /
[ ]	[ ]	[ ]	[ ]		[ ]	/ / /
[ ]	[ ]	[ ]	[ ]		[ ]	/ / /
[ ]	[ ]	[ ]	[ ]		[ ]	/ / /
[ ]	[ ]	[ ]	[ ]		[ ]	/ / /

NOTES/SKETCH

PCB 1A results

55500101 ≤ 1 ppm
*55500101D ≥ 4 ppm

*Ran from same extraction

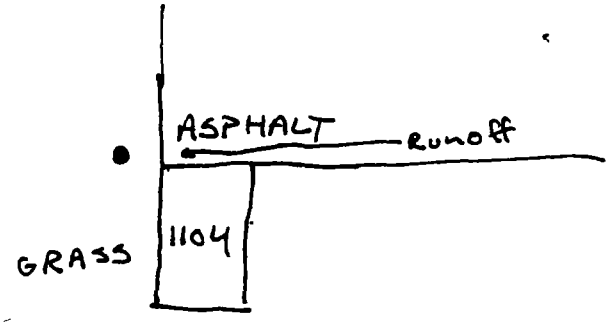

SURFACE SOIL SAMPLE FIELD DATA RECORD

Project: NTC ORLANDO
Project Number: 02530.09
Sample Location ID: 555 00201
Time: Start: 1440 End: 1444

Site: SA55
Date: 8-11/98
Signature of Sampler: [signature]

SOIL SAMPLE

DEPTH OF SAMPLE 0 - 1'

EQUIPMENT USED FOR COLLECTION:
- [X] HAND AUGER
- [ ] S.S. SPLIT SPOON
- [ ] SHOVEL
- [ ] HAND SPOON
- [ ] ALUMINUM PANS
- [ ] SS BUCKET
- [ ] _____

TYPE OF SAMPLE COLLECTED:
- [X] DISCRETE
- [ ] COMPOSITE

SAMPLE OBSERVATIONS:
- [ ] ODOR _____
- [X] COLOR Brown
- [ ] _____

DECONTAMINATION FLUIDS USED:
- ✓ ALL USED
- [ ] ETHYL ALCOHOL
- [ ] 25% METHANOL 75% ASTM TYPE II WATER
- [ ] DEIONIZED WATER
- [ ] LIQUINOX SOLUTION
- [ ] HEXANE
- [ ] HNO_3 SOLUTION
- [ ] POTABLE WATER
- [ ] NONE

SOIL TYPE:
- [ ] CLAY
- [X] SAND
- [ ] ORGANIC
- [ ] GRAVEL

FIELD GC DATA: [ ] FIELD DUPLICATE COLLECTED
DUPLICATE ID _____

SAMPLE LOCATION SKETCH:
- [X] YES
- [ ] NO

SAMPLES COLLECTED

✓ IF REQUIRED AT THIS LOCATION	MATRIX: SURFACE WATER	MATRIX: SEDIMENT	✓ IF PRESERVED WITH ACID-BASE	VOLUME REQUIRED	✓ IF SAMPLE COLLECTED	SAMPLE BOTTLE IDS
[ ]	[ ]	[ ]	[ ]		[ ]	/ / /
[ ]	[ ]	[ ]	[ ]		[ ]	/ / /
[ ]	[ ]	[ ]	[ ]		[ ]	/ / /
[ ]	[ ]	[ ]	[ ]		[ ]	/ / /
[ ]	[ ]	[ ]	[ ]		[ ]	/ / /
[ ]	[ ]	[ ]	[ ]		[ ]	/ / /
[ ]	[ ]	[ ]	[ ]		[ ]	/ / /

NOTES/SKETCH

PCB IA RESULTS
555 00201 ≤ 1 ppm PCB

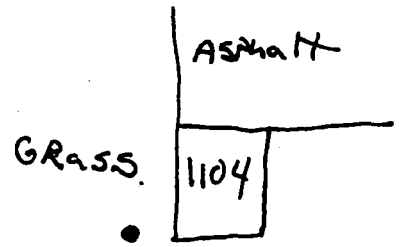

SURFACE SOIL SAMPLE FIELD DATA RECORD

Project: NTC ORLANDO
Project Number: 02530.09
Sample Location ID: 55S00301
Time: Start: 1444 End: 1450

Site: SA55
Date: 8 - 11/98
Signature of Sampler: [illegible]

SOIL SAMPLE

DEPTH OF SAMPLE 0 - 1

EQUIPMENT USED FOR COLLECTION:
- [X] HAND AUGER
- [ ] S.S. SPLIT SPOON
- [ ] SHOVEL
- [ ] HAND SPOON
- [ ] ALUMINUM PANS
- [ ] SS BUCKET
- [ ] _____

TYPE OF SAMPLE COLLECTED:
- [X] DISCRETE
- [ ] COMPOSITE

SAMPLE OBSERVATIONS:
- [ ] ODOR _____
- [X] COLOR brown
- [ ] _____

DECONTAMINATION FLUIDS USED:
- ✓ ALL USED
- [ ] ETHYL ALCOHOL
- [ ] 25% METHANOL 75% ASTM TYPE II WATER
- [ ] DEIONIZED WATER
- [ ] LIQUINOX SOLUTION
- [ ] HEXANE
- [ ] HNO_3 SOLUTION
- [ ] POTABLE WATER
- [ ] NONE

SOIL TYPE:
- [ ] CLAY
- [X] SAND
- [ ] ORGANIC
- [ ] GRAVEL

FIELD GC DATA: [ ] FIELD DUPLICATE COLLECTED
DUPLICATE ID _____

SAMPLE LOCATION SKETCH:
- [X] YES
- [ ] NO

SAMPLES COLLECTED

✓ IF REQUIRED AT THIS LOCATION	MATRIX: SURFACE WATER	MATRIX: SEDIMENT	✓ IF PRESERVED WITH ACID-BASE	VOLUME REQUIRED	✓ IF SAMPLE COLLECTED	SAMPLE BOTTLE IDS
[ ]	[ ]	[ ]	[ ]		[ ]	/ / /
[ ]	[ ]	[ ]	[ ]		[ ]	/ / /
[ ]	[ ]	[ ]	[ ]		[ ]	/ / /
[ ]	[ ]	[ ]	[ ]		[ ]	/ / /
[ ]	[ ]	[ ]	[ ]		[ ]	/ / /
[ ]	[ ]	[ ]	[ ]		[ ]	/ / /
[ ]	[ ]	[ ]	[ ]		[ ]	/ / /

NOTES/SKETCH

PCB IA RESULTS
55S00301 ≤ 1ppm PCB

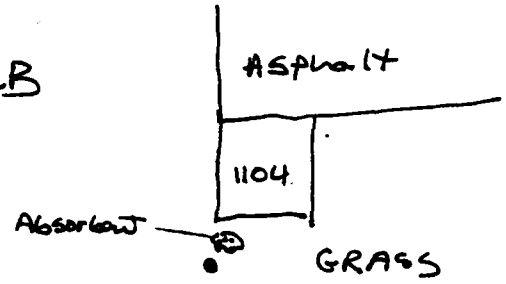

SURFACE SOIL SAMPLE FIELD DATA RECORD

Project: NTC ORLANDO
Project Number: 02530.09
Sample Location ID: 55500401
Time: Start: 1450 End: 1458

Site: SA55
Date: 8-11-98
Signature of Sampler: William D. Olson

SOIL SAMPLE

DEPTH OF SAMPLE 0-1'

EQUIPMENT USED FOR COLLECTION:
[X] HAND AUGER
[ ] S.S. SPLIT SPOON
[ ] SHOVEL
[ ] HAND SPOON
[ ] ALUMINUM PANS
[ ] SS BUCKET
[ ] _____

TYPE OF SAMPLE COLLECTED:
[X] DISCRETE
[ ] COMPOSITE

SAMPLE OBSERVATIONS:
[ ] ODOR _____
[X] COLOR brown
[ ] _____

DECONTAMINATION FLUIDS USED:
✓ ALL USED
[ ] ETHYL ALCOHOL
[ ] 25% METHANOL 75% ASTM TYPE II WATER
[ ] DEIONIZED WATER
[ ] LIQUINOX SOLUTION
[ ] HEXANE
[ ] HNO_3 SOLUTION
[ ] POTABLE WATER
[ ] NONE

SOIL TYPE:
[ ] CLAY
[X] SAND
[ ] ORGANIC
[ ] GRAVEL

FIELD GC DATA: [ ] FIELD DUPLICATE COLLECTED
DUPLICATE ID _____

SAMPLE LOCATION SKETCH:
[X] YES
[ ] NO

SAMPLES COLLECTED

✓ IF REQUIRED AT THIS LOCATION	MATRIX: SURFACE WATER	MATRIX: SEDIMENT	✓ IF PRESERVED WITH ACID-BASE	VOLUME REQUIRED	✓ IF SAMPLE COLLECTED	SAMPLE BOTTLE IDS
[ ]	[ ]	[ ]	[ ]	_____	[ ]	____/____/____/____
[ ]	[ ]	[ ]	[ ]	_____	[ ]	____/____/____/____
[ ]	[ ]	[ ]	[ ]	_____	[ ]	____/____/____/____
[ ]	[ ]	[ ]	[ ]	_____	[ ]	____/____/____/____
[ ]	[ ]	[ ]	[ ]	_____	[ ]	____/____/____/____
[ ]	[ ]	[ ]	[ ]	_____	[ ]	____/____/____/____
[ ]	[ ]	[ ]	[ ]	_____	[ ]	____/____/____/____

NOTES/SKETCH

PCB IA RESULTS

55500401 ≤ 1ppm

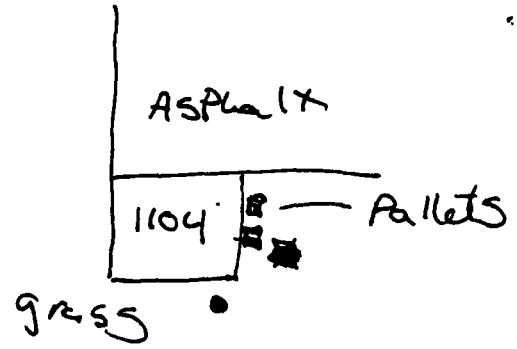

SURFACE SOIL SAMPLE FIELD DATA RECORD

Project: NTC ORLANDO
Project Number: 02530.09
Sample Location ID: 55500501
Time: Start: 1458 End: 1502

Site: SA55
Date: 8-11/98
Signature of Sampler: William D. Olser

SOIL SAMPLE

DEPTH OF SAMPLE 0-1'

EQUIPMENT USED FOR COLLECTION:
- [X] HAND AUGER
- [ ] S.S. SPLIT SPOON
- [ ] SHOVEL
- [ ] HAND SPOON
- [ ] ALUMINUM PANS
- [ ] SS BUCKET
- [ ] _____

TYPE OF SAMPLE COLLECTED:
- [X] DISCRETE
- [ ] COMPOSITE

SAMPLE OBSERVATIONS:
- [ ] ODOR _____
- [X] COLOR brown
- [ ] _____

DECONTAMINATION FLUIDS USED:
- ✓ ALL USED
- [ ] ETHYL ALCOHOL
- [ ] 25% METHANOL 75% ASTM TYPE II WATER
- [ ] DEIONIZED WATER
- [ ] LIQUINOX SOLUTION
- [ ] HEXANE
- [ ] HNO_3 SOLUTION
- [ ] POTABLE WATER
- [ ] NONE

SOIL TYPE:
- [ ] CLAY
- [X] SAND
- [ ] ORGANIC
- [ ] GRAVEL

FIELD GC DATA: [ ] FIELD DUPLICATE COLLECTED
DUPLICATE ID _____

SAMPLE LOCATION SKETCH:
- [X] YES
- [ ] NO

SAMPLES COLLECTED

✓ IF REQUIRED AT THIS LOCATION	MATRIX: SURFACE WATER	MATRIX: SEDIMENT	✓ IF PRESERVED WITH ACID-BASE	VOLUME REQUIRED	✓ IF SAMPLE COLLECTED	SAMPLE BOTTLE IDS
[ ]	[ ]	[ ]	[ ]		[ ]	/ / /
[ ]	[ ]	[ ]	[ ]		[ ]	/ / /
[ ]	[ ]	[ ]	[ ]		[ ]	/ / /
[ ]	[ ]	[ ]	[ ]		[ ]	/ / /
[ ]	[ ]	[ ]	[ ]		[ ]	/ / /
[ ]	[ ]	[ ]	[ ]		[ ]	/ / /
[ ]	[ ]	[ ]	[ ]		[ ]	/ / /

NOTES/SKETCH

PCB IA RESULTS
55500501 ≤ 1ppm PCB

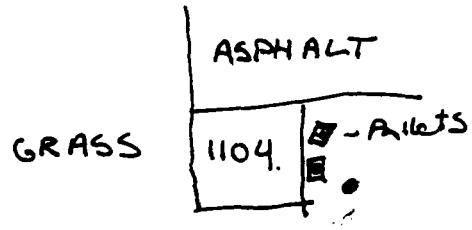

SURFACE SOIL SAMPLE FIELD DATA RECORD

Project: NTC ORLANDO
Project Number: 02530.09
Sample Location ID: 55500601
Time: Start: 1502 End: 1508

Site: SA55
Date: 8-11/98
Signature of Sampler: [illegible] D. Olsen

SOIL SAMPLE

DEPTH OF SAMPLE 0 - 1'

EQUIPMENT USED FOR COLLECTION:
- [X] HAND AUGER
- [ ] S.S. SPLIT SPOON
- [ ] SHOVEL
- [ ] HAND SPOON
- [ ] ALUMINUM PANS
- [ ] SS BUCKET
- [ ] _____

TYPE OF SAMPLE COLLECTED:
- [X] DISCRETE
- [ ] COMPOSITE

SAMPLE OBSERVATIONS:
- [ ] ODOR _____
- [X] COLOR Brown
- [ ] _____

DECONTAMINATION FLUIDS USED:
- ✓ ALL USED
- [ ] ETHYL ALCOHOL
- [ ] 25% METHANOL 75% ASTM TYPE II WATER
- [ ] DEIONIZED WATER
- [ ] LIQUINOX SOLUTION
- [ ] HEXANE
- [ ] HNO_3 SOLUTION
- [ ] POTABLE WATER
- [ ] NONE

SOIL TYPE:
- [ ] CLAY
- [X] SAND
- [ ] ORGANIC
- [ ] GRAVEL

FIELD QC DATA: [ ] FIELD DUPLICATE COLLECTED
DUPLICATE ID _____

SAMPLE LOCATION SKETCH:
- [X] YES
- [ ] NO

SAMPLES COLLECTED

✓ IF REQUIRED AT THIS LOCATION	MATRIX: SURFACE WATER	MATRIX: SEDIMENT	✓ IF PRESERVED WITH ACID-BASE	VOLUME REQUIRED	✓ IF SAMPLE COLLECTED	SAMPLE BOTTLE IDS
[ ]	[ ]	[ ]	[ ]		[ ]	/ / /
[ ]	[ ]	[ ]	[ ]		[ ]	/ / /
[ ]	[ ]	[ ]	[ ]		[ ]	/ / /
[ ]	[ ]	[ ]	[ ]		[ ]	/ / /
[ ]	[ ]	[ ]	[ ]		[ ]	/ / /
[ ]	[ ]	[ ]	[ ]		[ ]	/ / /
[ ]	[ ]	[ ]	[ ]		[ ]	/ / /

NOTES/SKETCH

PCB IA RESULTS
55500601 ≤ PCB
1ppm

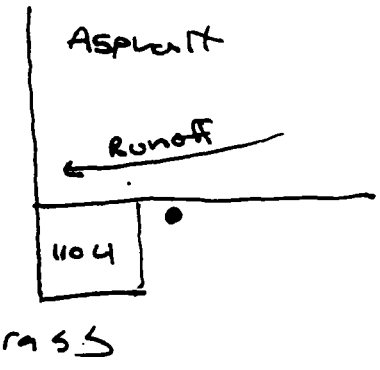

SURFACE SOIL SAMPLE FIELD DATA RECORD

Project: NTC ORLANDO
Project Number: 02530.05
Sample Location ID: 55S00102
Time: Start: 1108 End: 1123

Site: SA 55
Date: 8-12/98
Signature of Sampler: [illegible]

SOIL SAMPLE

DEPTH OF SAMPLE 0 - 1

EQUIPMENT USED FOR COLLECTION:
- [X] HAND AUGER
- [ ] S.S. SPLIT SPOON
- [ ] SHOVEL
- [ ] HAND SPOON
- [ ] ALUMINUM PANS
- [ ] SS BUCKET
- [X] encore

TYPE OF SAMPLE COLLECTED:
- [X] DISCRETE
- [ ] COMPOSITE

SAMPLE OBSERVATIONS:
- [ ] ODOR
- [X] COLOR brown
- [X] Lumps of coal or asphalt

DECONTAMINATION FLUIDS USED:
- ✓ ALL USED
- [ ] ETHYL ALCOHOL
- [ ] 25% METHANOL 75% ASTM TYPE II WATER
- [ ] DEIONIZED WATER
- [ ] LIQUINOX SOLUTION
- [ ] HEXANE
- [ ] HNO_3 SOLUTION
- [ ] POTABLE WATER
- [ ] NONE

SOIL TYPE:
- [ ] CLAY
- [X] SAND
- [ ] ORGANIC
- [ ] GRAVEL

FIELD GC DATA: [ ] FIELD DUPLICATE COLLECTED
DUPLICATE ID _____

SAMPLE LOCATION SKETCH:
- [X] YES
- [ ] NO

SAMPLES COLLECTED

✓ IF REQUIRED AT THIS LOCATION	MATRIX: SURFACE WATER	MATRIX: SEDIMENT	✓ IF PRESERVED WITH ACID-BASE	VOLUME REQUIRED	✓ IF SAMPLE COLLECTED	SAMPLE BOTTLE IDS
[ ]	[ ]	[ ]	[ ]		[ ]	/ / /
[ ]	[ ]	[ ]	[ ]		[ ]	/ / /
[ ]	[ ]	[ ]	[ ]		[ ]	/ / /
[ ]	[ ]	[ ]	[ ]		[ ]	/ / /
[ ]	[ ]	[ ]	[ ]		[ ]	/ / /
[ ]	[ ]	[ ]	[ ]		[ ]	/ / /
[ ]	[ ]	[ ]	[ ]		[ ]	/ / /

NOTES/SKETCH

3x Encore = VOC 8260 + 5035 ext.
1x 2oz = moisture content
1x 4oz = SVOC/Pest/PCB/TAL metals

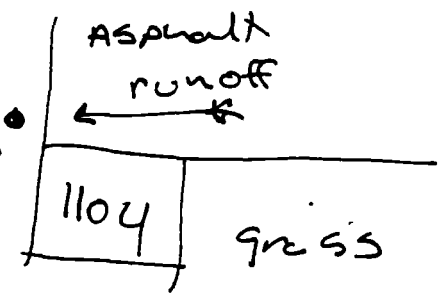

SURFACE SOIL SAMPLE FIELD DATA RECORD

Project: NTC ORLANDO
Project Number: 02530.05
Sample Location ID: 55500302
Time: Start: 1123 End: 1145

Site: SA 55
Date: 8-12/98
Signature of Sampler: [illegible] D. Olsen

SOIL SAMPLE

DEPTH OF SAMPLE 0-1

EQUIPMENT USED FOR COLLECTION:
- [X] HAND AUGER
- [ ] S.S. SPLIT SPOON
- [ ] SHOVEL
- [ ] HAND SPOON
- [ ] ALUMINUM PANS
- [ ] SS BUCKET
- [ ] _____

TYPE OF SAMPLE COLLECTED:
- [X] DISCRETE
- [ ] COMPOSITE

SAMPLE OBSERVATIONS:
- [ ] ODOR _____
- [X] COLOR BROWN
- [ ] _____

DECONTAMINATION FLUIDS USED:
- ✓ ALL USED
- [ ] ETHYL ALCOHOL
- [ ] 25% METHANOL 75% ASTM TYPE II WATER
- [ ] DEIONIZED WATER
- [ ] LIQUINOX SOLUTION
- [ ] HEXANE
- [ ] HNO_3 SOLUTION
- [ ] POTABLE WATER
- [ ] NONE

SOIL TYPE:
- [ ] CLAY
- [X] SAND
- [ ] ORGANIC
- [ ] GRAVEL

FIELD QC DATA: [ ] FIELD DUPLICATE COLLECTED
DUPLICATE ID _____

SAMPLE LOCATION SKETCH:
- [X] YES
- [ ] NO

SAMPLES COLLECTED

✓ IF REQUIRED AT THIS LOCATION	MATRIX: SURFACE WATER	MATRIX: SEDIMENT	✓ IF PRESERVED WITH ACID-BASE	VOLUME REQUIRED	✓ IF SAMPLE COLLECTED	SAMPLE BOTTLE IDS
[ ]	[ ]	[ ]	[ ]	_____	[ ]	___/___/___/___
[ ]	[ ]	[ ]	[ ]	_____	[ ]	___/___/___/___
[ ]	[ ]	[ ]	[ ]	_____	[ ]	___/___/___/___
[ ]	[ ]	[ ]	[ ]	_____	[ ]	___/___/___/___
[ ]	[ ]	[ ]	[ ]	_____	[ ]	___/___/___/___
[ ]	[ ]	[ ]	[ ]	_____	[ ]	___/___/___/___
[ ]	[ ]	[ ]	[ ]	_____	[ ]	___/___/___/___

NOTES/SKETCH

3x Encore = VOC 8260 + 5035 ext.
1x 2oz = moisture content
1x 4oz = SVOC/PEST/PCB/TAL Metals

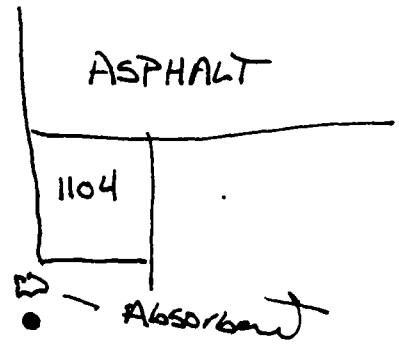

SURFACE SOIL SAMPLE FIELD DATA RECORD

Project: NTC ORLANDO
Project Number: 02530.05
Sample Location ID: 55500602
Time: Start: 1145 End: 1205

Site: SA55
Date: 8-12/98
Signature of Sampler: Nadia D. Olson

SOIL SAMPLE

DEPTH OF SAMPLE 0 - 1'

EQUIPMENT USED FOR COLLECTION:
- [X] HAND AUGER
- [ ] S.S. SPLIT SPOON
- [ ] SHOVEL
- [ ] HAND SPOON
- [ ] ALUMINUM PANS
- [ ] SS BUCKET
- [ ] _____

TYPE OF SAMPLE COLLECTED:
- [X] DISCRETE
- [ ] COMPOSITE

SAMPLE OBSERVATIONS:
- [ ] ODOR _____
- [X] COLOR Brown
- [ ] _____

DECONTAMINATION FLUIDS USED:
- ✓ ALL USED
- [ ] ETHYL ALCOHOL
- [ ] 25% METHANOL 75% ASTM TYPE II WATER
- [ ] DEIONIZED WATER
- [ ] LIQUINOX SOLUTION
- [ ] HEXANE
- [ ] HNO_3 SOLUTION
- [ ] POTABLE WATER
- [ ] NONE

SOIL TYPE:
- [ ] CLAY
- [X] SAND
- [ ] ORGANIC
- [ ] GRAVEL

FIELD GC DATA: [ ] FIELD DUPLICATE COLLECTED
DUPLICATE ID _____

SAMPLE LOCATION SKETCH:
- [X] YES
- [ ] NO

SAMPLES COLLECTED

✓ IF REQUIRED AT THIS LOCATION	MATRIX: SURFACE WATER	MATRIX: SEDIMENT	✓ IF PRESERVED WITH ACID-BASE	VOLUME REQUIRED	✓ IF SAMPLE COLLECTED	SAMPLE BOTTLE IDS
[ ]	[ ]	[ ]	[ ]	_____	[ ]	___/___/___/___
[ ]	[ ]	[ ]	[ ]	_____	[ ]	___/___/___/___
[ ]	[ ]	[ ]	[ ]	_____	[ ]	___/___/___/___
[ ]	[ ]	[ ]	[ ]	_____	[ ]	___/___/___/___
[ ]	[ ]	[ ]	[ ]	_____	[ ]	___/___/___/___
[ ]	[ ]	[ ]	[ ]	_____	[ ]	___/___/___/___
[ ]	[ ]	[ ]	[ ]	_____	[ ]	___/___/___/___

NOTES/SKETCH

3 x Encore = VOC 8260 + 5035 ext.
1 x 2oz. = moisture content
1 x 4oz = SVOC/PEST/PCB + TAL metals

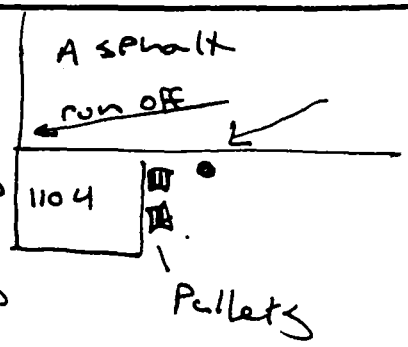

APPENDIX C

SUMMARY OF DETECTIONS TABLES

Table C-1	Summary of Surface Soil Immunoassay Analytical Results
Table C-2	Summary of Detections in Surface Soil Analytical Results
Table C-3	Summary of Detections in Groundwater Analytical Results

TABLE C-1

SUMMARY OF SURFACE SOIL IMMUNOASSAY ANALYTICAL RESULTS

Appendix C

Table C-1. Summary of Surface Soil Immunoassay Analytical Results

Study Area 55

Naval Training Center, Orlando

Orlando, FL

Sample ID	55S00101		55S00101D		55S00201		55S00301		55S00401		55S00501		55S00601	
Sampling Date	8/11/98		8/11/98		8/11/98		8/11/98		8/11/98		8/11/98		8/11/98	
Polychlorinated Biphenyls (PCBs), ppm														
Total PCBs	1	U	4		1	U	1	U	1	U	1	U	1	U

NOTES:

55S00101D is a duplicate analysis of the extract obtained from 55S00101.

Sample ID = Sample Identifier

ppm = parts per million

U = The analyte/compound was analyzed for but was not detected above the method quantitation limit.

The number preceding the U qualifier is the method quantitation limit.

TABLE C-2

SUMMARY OF DETECTIONS IN SURFACE SOIL ANALYTICAL RESULTS

Appendix C

Table C-2. Summary of Detections in Surface Soil Analytical Results

Study Area 55

Naval Training Center, Orlando
Orlando, FL

Sample ID	Background		SCTL		RBC for Residential Soil		RBC for Industrial Soil		55S00102		55S00302		55S00602	
Sampling Date									8/12/98		8/12/98		8/12/98	
Semivolatile Organics, µg/kg														
Benzo(a)anthracene			1,400		880	c	7,800	c	100	J			61	J
Benzo(a)pyrene			100		88	c	780	c	**240**	J	**88**	J	**130**	J
Benzo(b)fluoranthene			1,400		880	c	7,800	c	440		160	J	230	J
Benzo(g,h,i)perylene			2,300,000		2,300,000	n	61,000,000	n	240	J	80	J	120	J
Benzo(k)fluoranthene			15,000		8,800	c	78,000	c	150	J	66	J	95	J
Chrysene			140,000		88,000	c	780,000	c	230	J	83	J	140	J
Fluoranthene			2,800,000		3,100,000	n	82,000,000	n	170	J	54	J	130	J
Indeno(1,2,3-cd)pyrene			1,500		880	c	7,800	c	190	J	70	J	100	J
Phenanthrene			1,900,000		2,300,000	n	61,000,000	n	57	J				
Pyrene			2,200,000		2,300,000	n	61,000,000	n	220	J	76	J	180	J
Pesticides, µg/kg														
4,4'-DDD			4,500		2,700	c	24,000	c					7	
4,4'-DDE			3,200		1,900	c	17,000	c	8.3					
4,4'-DDT			3,200		1,900	c	17,000	c	6.7					
Aldrin			60		38	c	340	c					1.8	
alpha-Chlordane			3,000		490	c	4,400	c					21	
Endosulfan I			410,000		ND		ND						4.4	J
gamma-Chlordane			3,000		490	c	4,400	c					16	
Heptachlor epoxide			100		140	c	1,300	c					5.6	
Inorganics, mg/kg														
Aluminum	2088		72,000		78,000	n	1,000,000	n	2,490		3,420		2,490	
Arsenic	1.0		0.8		0.43 /23	c/n	3.8 /610	c/	**0.96**	B	**0.97**	B	**2.7**	
Barium	8.7		105		5,500	n	140,000	n	5.3	B	4.5	B	3.9	B
Calcium	25295		ND		1,000,000		1,000,000		9,360		1,920		3,080	
Chromium	4.6		290		390	n	10,000	n	3.2		3.1		2.6	
Copper	4.1		105		3,100	n	82,000	n	2.7		1.6	B	1.0	B
Iron	712.5		23,000		23,000	n	610,000	n	1,200		1,410		1,270	
Lead	14.5		500		400		400		12.1		3.9		4.5	
Magnesium	327.9		ND		460,468		460,468		4,430		80.7	B	92.7	B
Manganese	8.1		1,600		1,800	n	47,000	n	14.5		11.6		10.0	
Nickel	4.4		1500		1,600	n	41,000	n			1.7	B		
Potassium	157.3		ND		1,000,000		1,000,000		15.7	B	22.6	B	15.5	B
Sodium	91.4		ND		1,000,000		1,000,000		42.6	B	38.7	B	34.8	B
Vanadium	3.1		15		550	n	14,000	n	3.5	B	3.1	B	2.7	B
Zinc	17.2		23,000		23,000	n	610,000	n	9.6		8.4		3.9	B

NOTES:

The background screening value is twice the average of detected concentrations for inorganic analytes.

SCTL = Florida Department of Environmental Protection, Soil Cleanup Target Levels, Chapter 62-785 FAC, April 30, 1998.
Values indicated are for direct exposure scenario. Value for chromium is for chromium (IV).
Value for mercury is for inorganic mercury.

RBC = Risk-Based Concentration Table, USEPA Region III, May 1996, R.L. Smith. RBC for chromium is based on chromium VI. RBC for lead is not available; value is Interim Guidance on Establishing Soil Lead Cleanup Levels at Superfund Sites (OSWER directive 9355-4-12). For essential nutrients (calcium, magnesium, sodium, potassium) screening values were derived based on recommended daily allowances.
RBC for benzo(g,h,i)perylene and phenanthrene are not available, value is based on pyrene.

µg/kg = micrograms per kilogram.
mg/kg = milligrams per kilogram.
n = noncarcinogenic effects.

DDE = dichlorodiphenyldichloroethene.
DDT = dichlorodiphenyltrichloroethane.
DDD = dichlorodiphenyldichloroethane.

Appendix C

Table C-2. Summary of Detections in Surface Soil Analytical Results

Study Area 55

Naval Training Center, Orlando

Orlando, FL

c = carcinogenic effects.
ND = Not determined.

B = Reported concentration is between the instrument detection limit and Contract Required Detection Limit.
J = Reported concentration is an estimated quantity.
FDEP = Florida Department of Environmental Protection.
OSWER = Office of Solid Waste and Emergency Response.
USEPA = U.S. Environmental Protection Agency.
All inorganics results expressed in milligrams per kilogram (mg/kg) soil dry weight; organics in micrograms per kilogram (µg/kg) soil dry weight.
Bold/shaded values indicate exceedance of regulatory guidance and background.
Blank space indicates analyte/compound was not detected at the reporting limit.

TABLE C-3

SUMMARY OF DETECTIONS IN GROUNDWATER ANALYTICAL RESULTS

Appendix C

Table C-3. Summary of Detections in Groundwater Analytical Results

Study Area 55

Naval Training Center, Orlando
Orlando, FL

Well ID																
									OLD-55-01							
Sample ID	Background		FDEPGCTL		FEDMCL		RBC for Tap Water		55G00101							
Sampling Date									8/12/98							
Inorganics, µg/L																
Aluminum	4,067		200	s	ND		37,000	n	270							
Barium	31.4		2,000	p/st	2,000		2,600	n	8.3	B						
Calcium	36,830		ND		ND		1,000,000		19000							
Magnesium	4,560		ND		ND		118,807		550	B						
Manganese	17		50	s/st	ND		180	n	19							
Potassium	5,400		ND		ND		297,016		400	B						
Sodium	18,222		160,000	p	ND		396,022		2200	B						

NOTES:

Groundwater background screening value is twice the average of detected concentrations for inorganic analytes.
FDEPGCTL = Florida Department of Environmental Protection, Groundwater Cleanup Target Levels, Chapter 62-785 FAC, April 30, 1998.
FEDMCL= Federal Maximum Contaminant Levels, Primary Drinking Water Regulations and Health Advisories, February 1996.
RBC = Risk-Based Concentration Table, USEPA Region III, May 1996, R.L. Smith.
For essential nutrients (calcium, magnesium, potassium, and sodium) screening values were derived based on recommended daily allowances.

s = secondary groundwater standard.
st = systemic toxicant.
p = primary standard.
n = noncarcinogenic effects.
USEPA = U.S. Environmental Protection Agency.
B = Reported concentration is between the instrument detection limit and the contract required detection limit.
ND = Not determined.
µg/L = micrograms per liter.
Blank space indicates analyte/compound was not detected at the reporting limit.

APPENDIX D

SUMMARY OF ANALYTICAL RESULTS TABLES

Table D-1 Summary of Soil Analytical Results
Table D-2 Summary of Groundwater Analytical Results
Table D-3 Summary of Wipe Samples Analytical Results

TABLE D-1

SUMMARY OF SOIL ANALYTICAL RESULTS

Appendix D
Table D-1. Summary of Soil Analytical Results
Study Area 55

Naval Training Center, Orlando
Orlando, FL

Sample ID	55S00102		55S00302		55S00602	
Lab ID	A8H140121005		A8H140121006		A8H140121007	
Sampling Date	8/12/98		8/12/98		8/12/98	
Volatile organics, µg/kg						
1,1,1-Trichloroethane	260	U	260	U	260	U
1,1,2,2-Tetrachloroethane	260	U	260	U	260	U
1,1,2-Trichloroethane	260	U	260	U	260	U
1,1-Dichloroethane	260	U	260	U	260	U
1,1-Dichloroethene	260	U	260	U	260	U
1,2-Dichloroethane	260	U	260	U	260	U
1,2-Dichloroethene (total)	260	U	260	U	260	U
1,2-Dichloropropane	260	U	260	U	260	U
2-Butanone	1000	U	1000	U	1100	U
2-Hexanone	1000	U	1000	U	1100	U
4-Methyl-2-pentanone	1000	U	1000	U	1100	U
Acetone	1000	U	1000	U	1100	U
Benzene	260	U	260	U	260	U
Bromodichloromethane	260	U	260	U	260	U
Bromoform	260	U	260	U	260	U
Bromomethane	520	U	520	U	530	U
Carbon disulfide	260	U	260	U	260	U
Carbon tetrachloride	260	U	260	U	260	U
Chlorobenzene	260	U	260	U	260	U
Chloroethane	520	U	520	U	530	U
Chloroform	260	U	260	U	260	U
Chloromethane	520	U	520	U	530	U
cis-1,3-Dichloropropene	260	U	260	U	260	U
Dibromochloromethane	260	U	260	U	260	U
Ethylbenzene	260	U	260	U	260	U
Methylene chloride	260	U	260	U	260	U
Styrene	260	U	260	U	260	U
Tetrachloroethene	260	U	260	U	260	U
Toluene	260	U	260	U	260	U
trans-1,3-Dichloropropene	260	U	260	U	260	U
Trichloroethene	260	U	260	U	260	U
Vinyl chloride	520	U	520	U	530	U
Xylene (total)	260	U	260	U	260	U
Semivolatile organics, µg/kg						
1,2,4-Trichlorobenzene	350	U	350	U	350	U
1,2-Dichlorobenzene	350	U	350	U	350	U
1,3-Dichlorobenzene	350	U	350	U	350	U
1,4-Dichlorobenzene	350	U	350	U	350	U
2,2'-oxybis(1-Chloropropane)	350	U	350	U	350	U
2,4,5-Trichlorophenol	350	U	350	U	350	U
2,4,6-Trichlorophenol	350	U	350	U	350	U
2,4-Dichlorophenol	350	U	350	U	350	U
2,4-Dimethylphenol	350	U	350	U	350	U
2,4-Dinitrophenol	1700	U	1700	U	1700	U
2,4-Dinitrotoluene	350	U	350	U	350	U
2,6-Dinitrotoluene	350	U	350	U	350	U
2-Chloronaphthalene	350	U	350	U	350	U
2-Chlorophenol	350	U	350	U	350	U
2-Methylnaphthalene	350	U	350	U	350	U
2-Methylphenol	350	U	350	U	350	U
2-Nitroaniline	1700	U	1700	U	1700	U

Appendix D
Table D-1. Summary of Soil Analytical Results
Study Area 55

Naval Training Center, Orlando
Orlando, FL

Sample ID	55S00102		55S00302		55S00602	
Lab ID	A8H140121005		A8H140121006		A8H140121007	
Sampling Date	8/12/98		8/12/98		8/12/98	
2-Nitrophenol	350	U	350	U	350	U
3,3'-Dichlorobenzidine	1700	U	1700	U	1700	U
3-Nitroaniline	1700	U	1700	U	1700	U
4,6-Dinitro-2-methylphenol	1700	U	1700	U	1700	U
4-Bromophenyl-phenylether	350	U	350	U	350	U
4-Chloro-3-methylphenol	350	U	350	U	350	U
4-Chloroaniline	350	U	350	U	350	U
4-Chlorophenyl-phenylether	350	U	350	U	350	U
4-Methylphenol	350	U	350	U	350	U
4-Nitroaniline	1700	U	1700	U	1700	U
4-Nitrophenol	1700	U	1700	U	1700	U
Acenaphthene	350	U	350	U	350	U
Acenaphthylene	350	U	350	U	350	U
Anthracene	350	U	350	U	350	U
Benzo(a)anthracene	100	J	350	U	61	J
Benzo(a)pyrene	240	J	88	J	130	J
Benzo(b)fluoranthene	440		160	J	230	J
Benzo(g,h,i)perylene	240	J	80	J	120	J
Benzo(k)fluoranthene	150	J	66	J	95	J
bis(2-Chloroethoxy)methane	350	U	350	U	350	U
bis(2-Chloroethyl)ether	350	U	350	U	350	U
bis(2-Ethylhexyl)phthalate	350	U	350	U	350	U
Butylbenzylphthalate	350	U	350	U	350	U
Carbazole	350	U	350	U	350	U
Chrysene	230	J	83	J	140	J
Di-n-butylphthalate	350	U	350	U	350	U
Di-n-octylphthalate	350	U	350	U	350	U
Dibenz(a,h)anthracene	350	U	350	U	350	U
Dibenzofuran	350	U	350	U	350	U
Diethylphthalate	350	U	350	U	350	U
Dimethylphthalate	350	U	350	U	350	U
Fluoranthene	170	J	54	J	130	J
Fluorene	350	U	350	U	350	U
Hexachlorobenzene	350	U	350	U	350	U
Hexachlorobutadiene	350	U	350	U	350	U
Hexachlorocyclopentadiene	1700	U	1700	U	1700	U
Hexachloroethane	350	U	350	U	350	U
Indeno(1,2,3-cd)pyrene	190	J	70	J	100	J
Isophorone	350	U	350	U	350	U
N-Nitroso-di-n-propylamine	350	U	350	U	350	U
N-Nitrosodiphenylamine (1)	350	U	350	U	350	U
Naphthalene	350	U	350	U	350	U
Nitrobenzene	350	U	350	U	350	U
Pentachlorophenol	1700	U	1700	U	1700	U
Phenanthrene	57	J	350	U	350	U
Phenol	350	U	350	U	350	U
Pyrene	220	J	76	J	180	J
Pesticides/PCBs, µg/kg						
4,4'-DDD	3.5	U	3.5	U	7	
4,4'-DDE	8.3		3.5	U	3.5	U
4,4'-DDT	6.7		3.5	U	3.5	U
Aldrin	1.8	U	1.8	U	1.8	

Appendix D
Table D-1. Summary of Soil Analytical Results
Study Area 55

Naval Training Center, Orlando
Orlando, FL

Sample ID	55S00102		55S00302		55S00602	
Lab ID	A8H140121005		A8H140121006		A8H140121007	
Sampling Date	8/12/98		8/12/98		8/12/98	
alpha-BHC	1.8	U	1.8	U	1.8	U
alpha-Chlordane	1.8	U	1.8	U	21	
Aroclor-1016	35	U	35	U	35	U
Aroclor-1221	35	U	35	U	35	U
Aroclor-1232	35	U	35	U	35	U
Aroclor-1242	35	U	35	U	35	U
Aroclor-1248	35	U	35	U	35	U
Aroclor-1254	35	U	35	U	35	U
Aroclor-1260	35	U	35	U	35	U
beta-BHC	1.8	U	1.8	U	1.8	U
delta-BHC	1.8	U	1.8	U	1.8	U
Dieldrin	3.5	U	3.5	U	3.5	U
Endosulfan I	1.8	U	1.8	U	4.4	PF
Endosulfan II	3.5	U	3.5	U	3.5	U
Endosulfan sulfate	3.5	U	3.5	U	3.5	U
Endrin	3.5	U	3.5	U	3.5	U
Endrin aldehyde	3.5	U	3.5	U	3.5	U
Endrin ketone	3.5	U	3.5	U	3.5	U
gamma-BHC (Lindane)	1.8	U	1.8	U	1.8	U
gamma-Chlordane	1.8	U	1.8	U	16	
Heptachlor	1.8	U	1.8	U	1.8	U
Heptachlor epoxide	1.8	U	1.8	U	5.6	
Methoxychlor	18	U	18	U	18	U
Toxaphene	87	U	87	U	87	U

TABLE D-2

SUMMARY OF GROUNDWATER ANALYTICAL RESULTS

Appendix D
Table D-2. Summary of Groundwater Analytical Results
Study Area 55

Naval Training Center, Orlando
Orlando, FL

Sample ID	55G00101	
Lab ID	A8H140121008	
Sampling Date	8/12/98	
Volatile organics, µg/L		
1,1,1,2-Tetrachloroethane	0.5	U
1,1,1-Trichloroethane	0.5	U
1,1,2,2-Tetrachloroethane	0.5	U
1,1,2-Trichloroethane	0.5	U
1,1-Dichloroethane	0.5	U
1,1-Dichloroethene	0.5	U
1,1-Dichloropropene	0.5	U
1,2,3-Trichlorobenzene	0.5	U
1,2,3-Trichloropropane	0.5	U
1,2,4-Trichlorobenzene	0.5	U
1,2,4-Trimethylbenzene	0.5	U
1,2-Dibromo-3-chloropropane	0.6	U
1,2-Dibromoethane	0.5	U
1,2-Dichloroethane	0.5	U
1,2-Dichlorobenzene	0.5	U
1,3-Dichlorobenzene	0.5	U
1,4-Dichlorobenzene	0.5	U
1,2-Dichloropropane	0.5	U
1,3,5-Trimethylbenzene	0.5	U
1,3-Dichloropropane	0.5	U
2,2-Dichloropropane	0.5	U
2-Chlorotoluene	0.5	U
4-Chlorotoluene	0.5	U
4-Isopropyltoluene	0.5	U
Benzene	0.5	U
Bromobenzene	0.5	U
Bromochloromethane	0.5	U
Bromodichloromethane	0.5	U
Bromoform	0.5	U
Bromomethane	0.5	U
Carbon tetrachloride	0.5	U
Chlorobenzene	0.5	U
Chloroethane	0.5	U
Chloroform	0.5	U
Chloromethane	0.5	U
cis-1,2-Dichloroethene	0.5	U
cis-1,3-Dichloropropene	0.5	U
Dibromochloromethane	0.5	U
Dibromomethane	0.5	U
Dichlorodifluoromethane (CFC 12)	0.5	U
Ethylbenzene	0.5	U
Hexachlorobutadiene	0.5	U
Isopropylbenzene	0.5	U
Methylene chloride	0.5	U
Naphthalene	0.5	U
n-Butylbenzene	0.5	U
n-Propylbenzene	0.5	U
sec-Butylbenzene	0.5	U
Styrene	0.5	U
tert-Butylbenzene	0.5	U

Appendix D
Table D-2. Summary of Groundwater Analytical Results
Study Area 55

Naval Training Center, Orlando
Orlando, FL

Sample ID	55G00101	
Lab ID	A8H140121008	
Sampling Date	8/12/98	
Tetrachloroethene	0.5	U
Toluene	0.5	U
trans-1,2-Dichloroethene	0.5	U
trans-1,3-Dichloropropene	0.5	U
Trichloroethene	0.5	U
Trichlorofluoromethane (CFC 11)	0.5	U
Vinyl chloride	0.5	U
Semivolatile organics, µg/L		
2,2'-oxybis(1-Chloropropane)	10	U
2,4,5-Trichlorophenol	10	U
2,4,6-Trichlorophenol	10	U
2,4-Dichlorophenol	10	U
2,4-Dimethylphenol	10	U
2,4-Dinitrophenol	50	U
2,4-Dinitrotoluene	10	U
2,6-Dinitrotoluene	10	U
2-Chloronaphthalene	10	U
2-Chlorophenol	10	U
2-Methylnaphthalene	10	U
2-Methylphenol	10	U
2-Nitroaniline	50	U
2-Nitrophenol	10	U
3,3'-Dichlorobenzidine	50	U
3-Nitroaniline	50	U
4,6-Dinitro-2-methylphenol	50	U
4-Bromophenyl-phenylether	10	U
4-Chloro-3-methylphenol	10	U
4-Chloroaniline	10	U
4-Chlorophenyl-phenylether	10	U
4-Methylphenol	10	U
4-Nitroaniline	50	U
4-Nitrophenol	50	U
Acenaphthene	10	U
Acenaphthylene	10	U
Anthracene	10	U
Benzo(a)anthracene	10	U
Benzo(a)pyrene	10	U
Benzo(b)fluoranthene	10	U
Benzo(g,h,i)perylene	10	U
Benzo(k)fluoranthene	10	U
bis(2-Chloroethoxy)methane	10	U
bis(2-Chloroethyl)ether	10	U
bis(2-Ethylhexyl)phthalate	10	U
Butylbenzylphthalate	10	U
Carbazole	10	U
Chrysene	10	U
Di-n-butylphthalate	10	U
Di-n-octylphthalate	10	U
Dibenz(a,h)anthracene	10	U
Dibenzofuran	10	U
Diethylphthalate	10	U

Appendix D
Table D-2. Summary of Groundwater Analytical Results
Study Area 55

Naval Training Center, Orlando
Orlando, FL

Sample ID	55G00101	
Lab ID	A8H140121008	
Sampling Date	8/12/98	
Dimethylphthalate	10	U
Fluoranthene	10	U
Fluorene	10	U
Hexachlorobenzene	10	U
Hexachlorocyclopentadiene	50	U
Hexachloroethane	10	U
Indeno(1,2,3-cd)pyrene	10	U
Isophorone	10	U
N-Nitroso-di-n-propylamine	10	U
N-Nitrosodiphenylamine (1)	10	U
Nitrobenzene	10	U
Pentachlorophenol	50	U
Phenanthrene	10	U
Phenol	10	U
Pyrene	10	U
Pesticides/PCBs, µg/L		
4,4'-DDD	0.05	U
4,4'-DDE	0.05	U
4,4'-DDT	0.05	U
Aldrin	0.025	U
alpha-BHC	0.025	U
alpha-Chlordane	0.025	U
Aroclor-1016	0.5	U
Aroclor-1221	0.5	U
Aroclor-1232	0.5	U
Aroclor-1242	0.5	U
Aroclor-1248	0.5	U
Aroclor-1254	0.5	U
Aroclor-1260	0.5	U
beta-BHC	0.025	U
delta-BHC	0.025	U
Dieldrin	0.05	U
Endosulfan I	0.025	U
Endosulfan II	0.05	U
Endosulfan sulfate	0.05	U
Endrin	0.05	U
Endrin aldehyde	0.05	U
Endrin ketone	0.05	U
gamma-BHC (Lindane)	0.025	U
gamma-Chlordane	0.025	U
Heptachlor	0.025	U
Heptachlor epoxide	0.025	U
Methoxychlor	0.25	U
Toxaphene	1.2	U
Inorganics, µg/L		
Aluminum	270	
Antimony	60	U
Arsenic	10	U
Barium	8.3	B
Beryllium	5	U
Cadmium	5	U

Appendix D
Table D-2. Summary of Groundwater Analytical Results
Study Area 55

Naval Training Center, Orlando
Orlando, FL

Sample ID	55G00101	
Lab ID	A8H140121008	
Sampling Date	8/12/98	
Calcium	19000	
Chromium	10	U
Cobalt	50	U
Copper	25	U
Iron	100	U
Lead	3	U
Magnesium	550	B
Manganese	19	
Mercury	0.2	U
Nickel	40	U
Potassium	400	B
Selenium	5	U
Silver	10	U
Sodium	2200	B
Thallium	10	U
Vanadium	50	U
Zinc	50	U

TABLE D-3

SUMMARY OF WIPE SAMPLES ANALYTICAL RESULTS

Appendix D

Table D-3. Summary of Wipe Samples Analytical Results

Study Area 55

Naval Training Center, Orlando

Orlando, FL

Sample ID	55Z00101		55Z00201		55Z00301	
Lab ID	A8H140121001		A8H140121002		A8H140121003	
Sampling Date	8/12/98		8/12/98		8/12/98	
Polychlorinated Biphenyls, µg						
Aroclor-1016	4	U	4	U	4	U
Aroclor-1221	4	U	4	U	4	U
Aroclor-1232	4	U	4	U	4	U
Aroclor-1242	4	U	4	U	4	U
Aroclor-1248	4	U	4	U	4	U
Aroclor-1254	4	U	4	U	4	U
Aroclor-1260	4	U	4	U	4	U

Appendix D.
Notes for Summary of Analytical Results Tables
Study Area 55

Naval Training Center, Orlando
Orlando Florida

NA = Identified parameter not analyzed.
Sample ID = Sample Identifier
Lab ID = Laboratory identifier

Units:

mg/kg	milligram per kilogram
ug/kg	microgram per kilogram
ug/L	microgram per liter
ug	microgram

The following standard analytical data qualifiers have the following definitions:

U	The analyte/compound was analyzed for but was not detected above the reported sample quantitation limit The number preceding the U qualifier is the reported sample quantitation limit.
J	The analyte/compound was positively identified and the associated numerical value is an estimated concentration of the analyte/compound in the sample.
B	Reported concentration is between the instrument detection limit (IDL) and the contract required detection limit (CRDL).

Harding Lawson Associates

April 15, 1999
Commanding Officer
SOUTHNAVFACENGCOM
2155 Eagle Drive
North Charleston, SC 29419-9010

ATTN: Mr. Wayne Hansel, Code 18B7

Subject: **BRAC Environmental Site Screening Report**
Study Area 39
NTC, Orlando
Contract: N62467-89-D-0317

Dear Wayne:

Enclosed is the Final BRAC Environmental Site Screening Report for Study Area 39. We have updated the Draft Final report issued in September 1997 to reflect:

- Additional soil sampling to vertically delineate PAHs and arsenic in surface soil
- Destruction of 7 monitoring wells during construction along the utility corridor north of Lake Gear, and
- The recent change in reuse for this parcel from mixed office and residential to nonresidential

We have also sent copies of the report to other members of the BRAC Cleanup Team for their review. If you have any questions or need additional information, please call me at (904) 772-7688.

Very Truly Yours,

Harding Lawson Associates

Richard P. Allen
Project Technical Lead

Attachment

cc Nancy Rodriguez, USEPA Region IV
David Grabka, FDEP
file

Engineering and
Environmental Services

2590 Executive Center Circle East, Tallahassee, FL 32301 850/656-1293 Fax: 850/656-3386

BASE REALIGNMENT AND CLOSURE ENVIRONMENTAL SITE SCREENING REPORT

STUDY AREA 39

NAVAL TRAINING CENTER ORLANDO, FLORIDA

Unit Identification Code: N65928

Contract No.: N62467-89-D-0317/107

Prepared by:

Harding Lawson Associates
2590 Executive Center Circle, East
Tallahassee, Florida 32301

Prepared for:

Department of the Navy, Southern Division
Naval Facilities Engineering Command
2155 Eagle Drive
North Charleston, South Carolina 29418

Barbara Nwokike, Code 1873, Engineer-in-Charge

April 1999

CERTIFICATION OF TECHNICAL
DATA CONFORMITY (MAY 1987)

The Contractor, Harding Lawson Associates, hereby certifies that, to the best of its knowledge and belief, the technical data delivered herewith under Contract No. N62467-89-D-0317/107 are complete and accurate and comply with all requirements of this contract.

DATE: April 15, 1999

NAME AND TITLE OF CERTIFYING OFFICIAL: John Kaiser
Task Order Manager

NAME AND TITLE OF CERTIFYING OFFICIAL: Richard Allen
Project Technical Lead

(DFAR 252.227-7036)

EXECUTIVE SUMMARY

Harding Lawson Associates, Inc. (HLA) under contract to the Southern Division, Naval Facilities Engineering Command, has prepared this Site Screening Report for Study Area (SA) 39, located at the Naval Training Center, Orlando, Florida. This report was prepared under the Comprehensive Long-Term Environmental Action, Navy (CLEAN) Contract No. N62467-89-D-0317 as Contract Task Order No. 107.

The objective of the site screening investigation was to locate and identify any compounds that may be present at concentrations in excess of screening criteria. The investigation required several phases to complete. During the initial episode of screening, the surface soils at the site were found to have concentrations of polynuclear aromatic hydrocarbons (PAHs) and arsenic in excess of screening criteria. The investigation also demonstrated that the groundwater of the surficial aquifer had concentrations of chlorinated hydrocarbons, primarily tetrachloroethene (PCE) in excess of State and Federal maximum contaminant levels. Accordingly, the Orlando Partnering Team requested supplemental screening investigations designed to evaluate and characterize the PAHs and arsenic in surface soils.

The supplemental surface soil field program involved the collection of surface soil samples from a grid placed over the entire site. The samples were analyzed onsite using immunoassay testing techniques with a percentage of the samples submitted to an off-site laboratory for confirmation of the type and concentration of the PAH compounds present. The samples submitted to the laboratory were also analyzed for arsenic. The results of the supplemental surface soil investigation allowed for delineation of the total PAH and arsenic concentrations in surface soils across the site. These data were then used in a Focused Risk Assessment (FRA) to determine whether or not PAHs and arsenic in surface soil may pose a potential risk to future users of the site.

The results of the FRA demonstrated that the potential future reasonable *maximum* exposure for residential use of the site could result in a cancer risk of 1×10^{-5}. This risk level exceeds the cancer risk target established by the Florida Department of Environmental Protection (i.e., 1×10^{-6}). The FRA also concluded that the potential future average residential risk posed by exposure to surface soil was at an acceptable cancer risk level of 1×10^{-6}. The cancer risk range, 1×10^{-5} to 1×10^{-6}, presented by these scenarios presents information for the risk manager to use as perspective into the risks presented by the site as a whole.

The FRA was completed at a time when the planned reuse for this parcel was a combination of office and residential. Since then, the reuse has been changed to nonresidential. Under a nonresidential reuse scenario, concentrations of arsenic and PAHs in surface soil meet screening criteria (ABB Environmental Services, Inc., 1997e). However, institutional controls in the form of land use restrictions would be necessary to protect future users.

The supplemental groundwater field program was initiated with the collection of groundwater samples within the surficial aquifer using direct push technology (DPT). These samples were analyzed with an onsite field laboratory combined with off-site laboratory confirmation to determine the general degree and limits of chlorinated hydrocarbons in groundwater and to locate permanent monitoring wells. Groundwater samples were subsequently collected from the monitoring wells along

with surface and subsurface soil, and surface water and sediment samples from neighboring Lake Gear. Hydraulic conductivity testing results were combined with the lithology to characterize the local hydrogeology.

The results of the supplemental groundwater screening investigation indicated the presence of a chlorinated hydrocarbon plume (primarily PCE) beneath the southeast corner of the site. The plume is elliptical in plan view, measuring approximately 300 feet long by 100 feet wide. The downgradient portion of the plume is not well defined due to the presence of a utility corridor along the northern shoreline of Lake Gear. The long axis of the plume is oriented southeast in the direction of groundwater flow. The highest PCE concentrations were detected along the upper surface of a sandy clay layer at a depth of 30 to 32 feet below land surface (bls). In the southeast corner of the site, the clay layer is thinner and the sand content increases. In that area, contaminants have migrated downward through the sandy clay layer to a depth of up to approximately 60 feet bls. A natural attenuation assessment survey indicated that the subsurface environment was not favorable for natural attenuation of the chlorinated hydrocarbons.

Permanent monitoring wells installed to confirm the results of the DPT groundwater screening have confirmed the presence of PCE, but at significantly lower concentrations than were reported during screening. The highest PCE concentration reported was 27 micrograms per liter in well OLD-39-19C, screened at 45 to 50 feet bls.

Seven monitoring wells were destroyed by the City of Orlando during recent utility construction activities along the south property line of the Main Base. It will be necessary to reinstall these wells for future groundwater monitoring activities. After the wells are reinstalled, HLA recommends that a quarterly groundwater monitoring program be implemented. Quarterly monitoring (for volatiles and natural attenuation parameters) would be reevaluated after 1 year. HLA further recommends that a temporary groundwater use restriction be imposed for the shallow portion of the surficial aquifer pending results of the groundwater monitoring program. HLA also recommends an evaluation of remedial options along with a cost benefit analysis.

With regard to the surface soils at SA 39, HLA recommends that institutional controls be implemented restricting the future reuse of this parcel to nonresidential. This will provide an adequate level of protection to future site workers and users of this parcel.

TABLE OF CONTENTS

Base Realignment and Closure
Environmental Site Screening Report
Study Area 39
Naval Training Center
Orlando, Florida

Chapter	Title	Page No.
1.0	STUDY AREA 39, STRUCTURE 4060, STRUCTURE 4067, STRUCTURE 15109, AND UNNUMBERED FACILITY 10	1-1
	1.1 INTRODUCTION	1-1
	1.2 BACKGROUND AND CONDITIONS	1-1
2.0	INITIAL SITE SCREENING INVESTIGATION	2-1
	2.1 FIELD PROGRAM	2-1
	2.1.1 Geophysics	2-1
	2.1.2 UXO Survey	2-1
	2.1.3 Passive Soil Gas	2-1
	2.1.4 Soil Sampling	2-2
	2.1.4.1 Surface Soil	2-2
	2.1.4.2 Subsurface Soil	2-4
	2.1.5 Groundwater	2-4
	2.2 RESULTS	2-5
	2.2.1 Geophysics	2-5
	2.2.2 UXO Survey	2-5
	2.2.3 Passive Soil Gas	2-5
	2.2.4 Soil Sampling	2-5
	2.2.4.1 Surface Soil	2-7
	2.2.4.2 Subsurface Soil	2-7
	2.2.5 Groundwater	2-7
3.0	EVALUATION OF PAHS AND ARSENIC IN SOIL	3-1
	3.1 FIELD PROGRAM	3-1
	3.1.1 Immunoassay Screening for PAHs	3-1
	3.1.2 PAH and Arsenic Analysis of Confirmation Samples	3-1
	3.2 RESULTS	3-1
	3.2.1 PAHs	3-3
	3.2.2 Arsenic	3-6
	3.2.3 Focused Risk Assessment	3-6
	3.2.4 Vertical Delineation of PAHs and Arsenic	3-7
4.0	EVALUATION OF PCE IN GROUNDWATER	4-1
	4.1 PHASE I FIELD PROGRAM	4-1
	4.1.1 Monitoring Well Installation and Groundwater Sampling	4-1
	4.1.2 Results	4-3
	4.2 PHASE II FIELD PROGRAM	4-3
	4.2.1 Screening	4-3
	4.2.1.1 Cone Penetrometer Testing (CPT)	4-3
	4.2.1.2 Groundwater Screening	4-5
	4.2.1.3 Soil Screening	4-6
	4.2.1.4 Results	4-8

TABLE OF CONTENTS (Continued)

Base Realignment and Closure
Environmental Site Screening Report
Study Area 39
Naval Training Center
Orlando, Florida

Chapter	Title	Page No.
4.2.2	Confirmation	4-14
4.2.2.1	Monitoring Well Placement and Construction	4-14
4.2.2.2	Groundwater Sampling	4-16
4.2.2.3	Surface Water and Sediment Sampling	4-16
4.2.2.4	Hydraulic Conductivity Testing	4-17
4.2.2.5	Results	4-17
5.0	STUDY AREA 39, CONCLUSIONS AND RECOMMENDATIONS	5-1
5.1	CONCLUSIONS	5-1
5.1.1	Soil	5-1
5.1.2	Groundwater	5-1
5.1.3	Site Conceptual Model	5-2
5.2	RECOMMENDATIONS	5-2
5.2.1	Soil	5-2
5.2.2	Groundwater	5-2

REFERENCES

APPENDICES

Appendix A: Summary of Monitoring Well Construction Details, Monitoring Well Elevation Survey, Head Potential Elevation Survey, Soil Boring Logs, Individual Well Construction Details, and Groundwater Sampling Field Data Sheets
Appendix B: Technical Memorandum, Geophysical Survey Results, Study Areas 39 and 40
Appendix C: UXO Survey Results
Appendix D: Passive Soil Gas Survey Results
Appendix E: Summary of Detections Tables (CLP Laboratory)
Appendix F: Summary of Analytical Results (CLP Laboratory)
Appendix G: Evaluation of PAHs and Arsenic in Surface Soil by Immunoassay Testing and Laboratory Confirmation
Appendix H: Cone Penetrometer Testing Results
Appendix I: Field Screening Groundwater Analytical Results (Onsite Mobile Laboratory), Supplemental Screening (Phase II)
Appendix J: Natural Attenuation Assessment Results
Appendix K: Hydraulic Conductivity Testing Results, Supplemental Screening (Phase II)

LIST OF FIGURES

Base Realignment and Closure
Environmental Site Screening Report
Study Area 39
Naval Training Center
Orlando, Florida

Figures	Title	Page No.
1-1	Location of Study Area 39	1-2
1-2	Plan Map, Study Area 39	1-3
2-1	Sampling Locations, Initial Screening	2-3
2-2	Analytical Results, Initial Screening	2-6
3-1	Samples Collected for Immunoassay PAH Testing	3-2
3-2	PAH Immunoassay Test Results, Supplemental Screening	3-4
3-3	Exceedances of Screening Criteria in Surface Soil	3-5
4-1	Groundwater Analytical Results, Supplemental Screening (Phase I)	4-2
4-2	Cone Penetrometer Testing and Groundwater Screening Points	4-4
4-3	Soil Boring Locations	4-7
4-4	PCE Concentrations at 15 to 17 Feet Below Land Surface	4-9
4-5	PCE Concentrations at 28 to 30 Feet Below Land Surface	4-10
4-6	PCE Concentrations at 35 to 37 Feet Below Land Surface	4-12
4-7	PCE Concentration and Lithologic Cross-Section A-A'	4-13
4-8	Groundwater, Surface Water, and Sediment Sampling Locations	4-15
4-9	PCE Concentrations at 35 to 37 Feet Below Land Surface	4-18
4-10	Groundwater Elevation Contours, Shallow Portion of the Surficial Aquifer, July 25, 1997	4-22
4-11	Groundwater Elevation Contours, Intermediate Portion of the Surficial Aquifer, July 25, 1997	4-23
4-12	Groundwater Elevation Contours, Deep Portion of the Surficial Aquifer, July 25, 1997	4-24
5-1	Site Conceptual Model	5-3
5-2	Proposed Replacement Locations for Monitoring Well Network	5-5

LIST OF TABLES

Base Realignment and Closure
Environmental Site Screening Report
Study Area 39
Naval Training Center
Orlando, Florida

Table	Title	Page No.
4-1	Comparison of Groundwater Analytical Results DPT (Onsite Field Laboratory) versus Monitoring Well (Off-Site CLP Laboratory)	4-20

GLOSSARY

ABB-ES	ABB Environmental Services, Inc.
bls	below land surface
CFR	Code of Federal Regulations
CLP	Contract Laboratory Program
CPT	cone penetrometer testing
DCE	dichloroethene
DNAPL	dense nonaqueous-phase liquid
DPT	direct-push technology
DQO	data quality objective
EOD	explosive ordnance disposal
FDEP	Florida Department of Environmental Protection
FID	flame ionization detector
FRA	Focused Risk Assessment
GC	gas chromatograph
GCTL	groundwater cleanup target level
GPR	ground penetrating radar
HLA	Harding Lawson Associates, Inc.
IA	immunoassay
MCL	maximum contaminant level
$\mu g/\ell$	micrograms per liter
$\mu g/kg$	micrograms per kilogram
mg/kg	milligrams per kilogram
NTC	Naval Training Center
OPT	Orlando Partnering Team
PAH	polynuclear aromatic hydrocarbons
PCE	tetrachloroethene
pCi/ℓ	picocuries per liter
pCi/g	picocuries per gram
POP	project operations plan
PVC	polyvinyl chloride
RBC	risk-based concentration
RGO	remedial goal option
RME	reasonable maximum exposure
SA	Study Area
SCM	site conceptual model
SCTL	soil cleanup target level

GLOSSARY (Continued)

SPT	standard penetration test
SVOC	semivolatile organic compound
TAL	target analyte list
TCE	trichloroethene
TCL	target compound list
TMP	Tank Management Plan
TPH	total petroleum hydrocarbons
USEPA	U.S. Environmental Protection Agency
UNF	Unnumbered Facility
USCS	Unified Soil Classification System
UXO	unexploded ordnance
VOC	volatile organic compound

1.0 STUDY AREA 39, STRUCTURE 4060, STRUCTURE 4067, STRUCTURE 15109, AND UNNUMBERED FACILITY 10

1.1 INTRODUCTION. This report contains information gathered as a result of site screening activities conducted at Study Area (SA) 39. The focus of site screening investigation activities was the former uses of the site as a coal storage yard and for alleged landfill operations, as well as the current use as solid and hazardous materials storage and handling areas. The initial phase of screening fieldwork began in January 1996. Because of exceedances of screening criteria for both the soil and groundwater at that time, additional site screening was performed to determine the nature and extent of impact. The supplemental site screening work was completed in May and September 1997.

1.2 BACKGROUND AND CONDITIONS. SA 39 is located in the southwest corner of the Main Base of the Naval Training Center (NTC), Orlando (Figure 1-1). The study area encompasses approximately 10 acres of land bounded on the south and west by the Main Base's western property line, on the east by Grace Hopper Avenue, and on the north by Nautilus Street. Most of the west side of SA 39 is undeveloped and covered with grass except for a small stand of trees in the southwest corner (Figure 1-2). The northwest corner of the area is occupied by a fenced parking lot used by base personnel. The northeast corner is paved and used for vehicle parking. A stormwater detention pond occupies the area between the two parking lots. The detention pond is finished at approximately 6 feet below grade.

Surface runoff from the study area drains to the detention pond and then into Lake Gear, a small lake (approximately 500 feet in diameter) located immediately south of the base. Lake Gear is likely a "sinkhole lake," implying formation through sinkhole development. Although there are no known studies to substantiate this claim, Lake Gear appears to be morphologically similar to documented sinkhole lakes in the area (Beck et al. 1968).

There are several structures in the southeast corner of SA 39, including two large solid waste receptacles (dumpsters) and their loading ramps (Structures 4060 and 4067). The ground surface in the areas adjacent to the dumpsters is used for the temporary staging of larger waste items awaiting disposal (i.e. trees and brush). The facility's grounds maintenance contractor utilizes the area to the east to house a small, mobile trailer office building and a fenced storage yard. The Hazardous Materials Storage Facility (Building 137) is located further to the east.

In addition to the current site activities, this area was targeted for screening because the southwest corner was used for coal storage when the base's utilities were powered by coal (ABB Environmental Services, Inc. [ABB-ES], 1995a and 1995b). The former coal storage area was designated Unnumbered Facility (UNF) 10. A second area of concern was that the western half of the site (north of the coal yard) was used as a "bottle" landfill (UNF 6) prior to 1947. Most of the landfill is actually contained within SA 40, located immediately north of SA 39. This landfill was reportedly utilized for the disposal of demolition debris that may have included asbestos-containing material, small armaments, medical wastes, and household refuse.

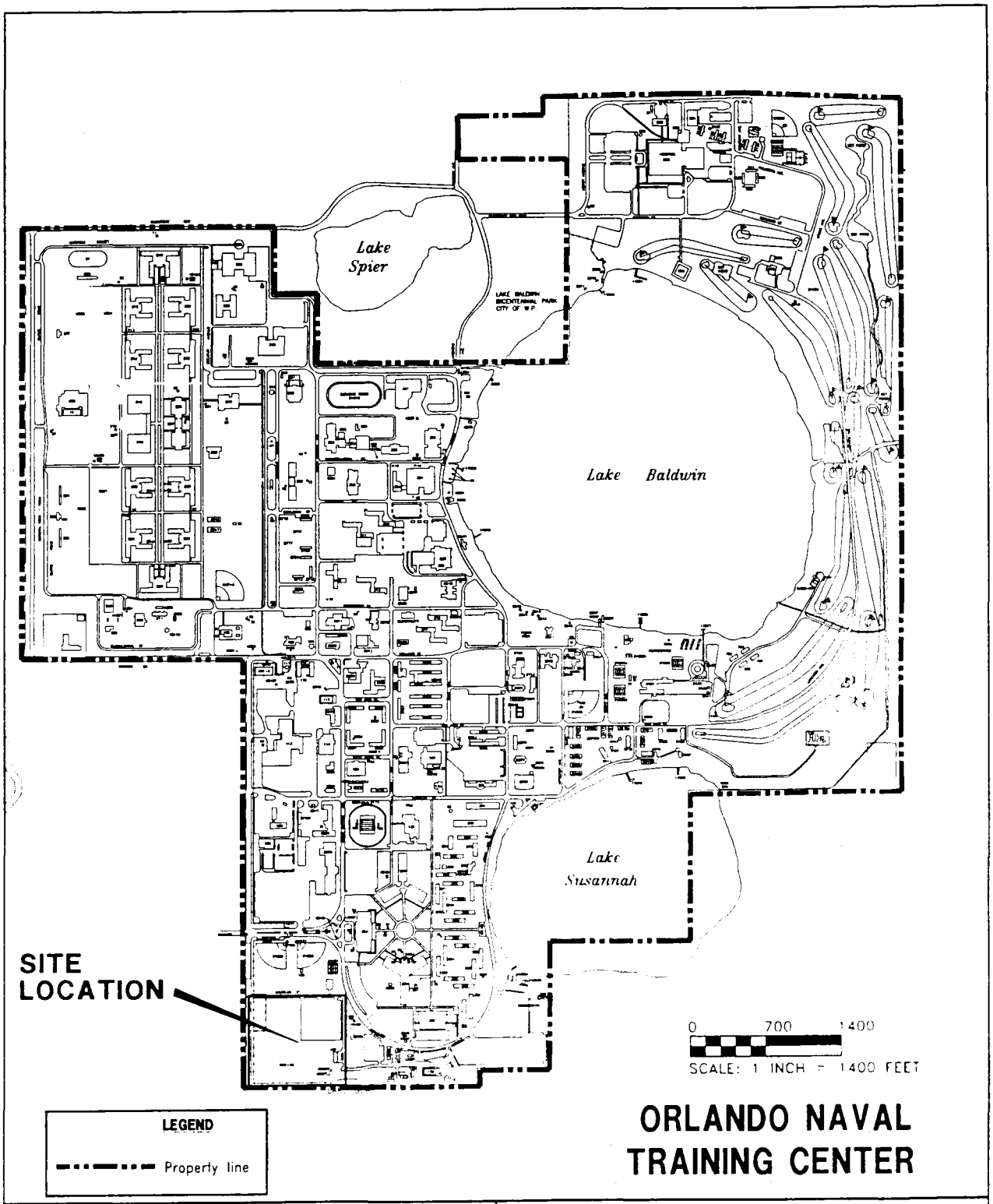

FIGURE 1-1
LOCATION OF STUDY AREA 39

BASE REALIGNMENT AND CLOSURE ENVIRONMENTAL SITE SCREENING REPORT
STUDY AREA 39

NAVAL TRAINING CENTER
ORLANDO, FLORIDA

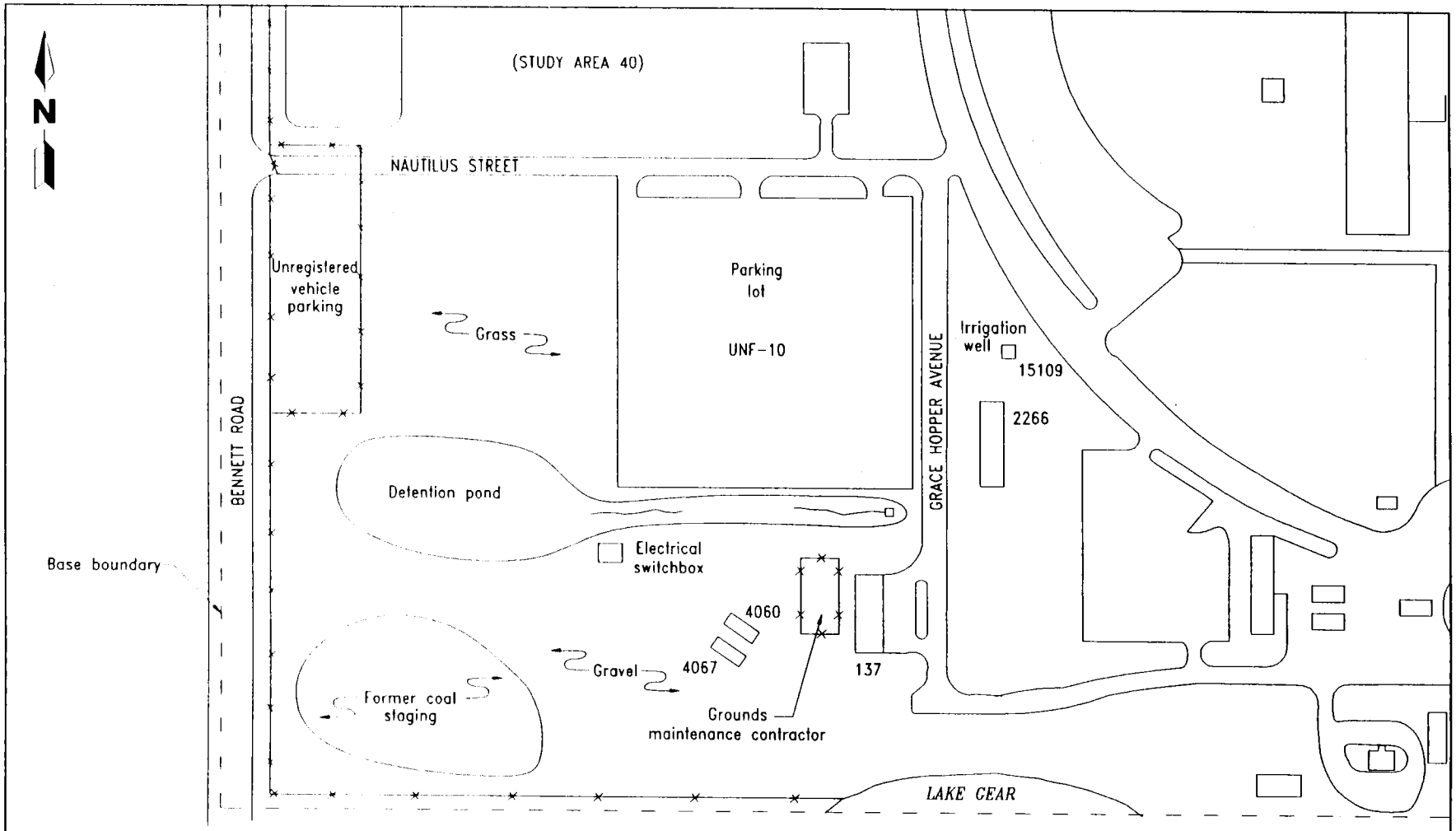

LEGEND

UNF Unnumbered facility

0 100 200

SCALE: 1 INCH = 200 FEET

H:\OLD\SA39\8519F001.DWG, NP-POP 07/18/97 15:29:52

FIGURE 1-2
LAYOUT OF STUDY AREA 39

BASE REALIGNMENT AND CLOSURE ENVIRONMENTAL SITE SCREENING REPORT, STUDY AREA 39

NAVAL TRAINING CENTER ORLANDO, FLORIDA

2.0 INITIAL SITE SCREENING INVESTIGATION

The objective of the site screening investigation was to determine whether or not environmental media have been impacted from current or historical land uses. Initial screening investigations at SAs 39 and 40 were performed concurrently because of their proximity, but this document focuses only on the results at SA 39. The workplan for initial site screening is detailed in the Site Screening Plan, Former Air Force Sites (ABB-ES, 1995b). The initial phase of screening was performed during the period from January through April 1996 and was reported in a technical memorandum in June 1996 (ABB-ES, 1996). The results are summarized below. All field methodology used at SA 39 was performed in a manner consistent with the guidelines prescribed in the Project Operations Plan (POP) for NTC, Orlando (ABB-ES, 1997f).

2.1 FIELD PROGRAM. The field program for the initial screening investigation at SA 39 began with a geophysical survey designed to map any buried metal objects that might be indicative of potential unexploded ordnance (UXO). The geophysical survey was followed, in order, by the UXO survey, a passive soil gas survey, and the collection of soil and groundwater samples for laboratory analysis. A description of these activities is provided below.

2.1.1 Geophysics A geophysical survey was completed at SAs 39 and 40. The survey was designed to locate buried objects that could pose a threat to the environment (e.g., buried drums and UXO). The survey involved the use of a magnetometer and time domain metal detector to locate metallic objects and was followed by a confirmatory ground penetrating radar (GPR) survey.

Prior to performing the survey, a grid coordinate system was established across the area to determine the relative location of any target anomalies to be cleared during the subsequent UXO survey. Following the survey, the grid coordinates at the location of each anomaly were recorded in a logbook, and the grid outline was marked on the ground surface by paint and/or pin flags for future reference.

2.1.2 UXO Survey Because of the potential for the presence of UXO in the subsurface, the locations for all of the geophysical anomalies were marked in the field for the UXO survey by the U.S. Navy's Explosive Ordnance Disposal (EOD), Mobile Unit Six, Detachment Mayport, Mayport, Florida. The detachment utilized Mk 26 Ferrous Metal and Mk 29 All-Metals detectors to confirm the location of these anomalies and to survey SAs 39 and 40. The outline of each detected anomaly was flagged at the surface, and any object located within 4 feet of the surface was excavated for a visual inspection. A description of all the excavated material was recorded by the detachment.

2.1.3 Passive Soil Gas A passive soil gas survey was performed to locate areas underlain by volatile or semivolatile organic compounds (VOCs or SVOCs) present in the subsurface. Areas with detections would then become the focus of subsequent soil and groundwater sampling.

Soil gas data are always semiqualitative, because multiple sources in soil and/or groundwater cannot be differentiated. Further, compound concentrations in each collector are compared on a relative basis, depending on whether or not the data

are interpreted to be of high, moderate to high, moderate, etc., intensity. These qualitative soil gas values do not represent actual concentrations of the reported compounds. Efforts to relate soil gas response directly to groundwater or soil contaminant concentrations are generally not regarded as productive owing to the assumptions that are required for heterogeneity and source distribution.

Passive soil gas samplers were installed at over 200 locations at SAs 39 and 40 using the grid established for the geophysical survey. In open areas, sample points were established every 50 feet; in the paved areas, the spacing was widened to 100 feet. Each sampler was equipped with two activated charcoal adsorption elements housed in a glass tube. The glass tube was placed upside down in a narrow borehole (approximately 1-1/2 inches in diameter) to a depth of 1 foot below land surface (bls). Following installation, the detectors were covered with a thin layer of soil or, in paved areas, with a thin layer of cement. Several time-calibration samplers were installed at locations within the survey area to measure the rate at which "loading" by volatile gases was occurring. These samplers were retrieved after 2 days and analyzed to determine the optimal period of time the other samplers should remain in place. The time-calibration results indicated the samplers should remain deployed for a period of 7 days before retrieval.

During analysis, one of the charcoal elements was analyzed by thermal desorption/ mass spectrometry to measure the ion count of substances detected. If compounds were detected, the second element was analyzed by thermal desorption-gas chromatography/mass spectrometry to identify the compound(s) causing the response.

All sampling and analysis was performed in accordance with U.S. Environmental Protection Agency (USEPA) Level II data quality objectives (DQOs) (ABB-ES, 1997f).

2.1.4 Soil Sampling

2.1.4.1 Surface Soil Eight surface soil samples (0 to 1 foot bls) were collected from the locations shown on Figure 2-1. All samples with an "S" designation are surface soil samples. Any sample collected from a soil boring regardless of whether or not it was a surface or subsurface soil sample was given a "B" designation. Sample 39S001 was collected from the area downgradient of the "bottle" landfill; 39S002 was collected from a small drainage swale; 39S003 and 39S004 were collected from the detention pond; 39S005 was collected from the solid waste receptacles area; 39S006 was collected from the grounds maintenance storage yard; 39S007 was collected just north of the edge of Lake Gear; and 39S008 was collected from the area where large solid waste items are stored.

The surface soil samples were submitted to an approved laboratory for full suite Contract Laboratory Program (CLP) target analyte list (TAL) and target compound list (TCL) laboratory analysis, along with total petroleum hydrocarbons (TPH) and explosives analysis, in accordance with USEPA Level IV DQOs. The sample collected from the grounds maintenance area was analyzed for all of the above parameters plus pesticides and herbicides, in accordance with USEPA Level IV DQOs.

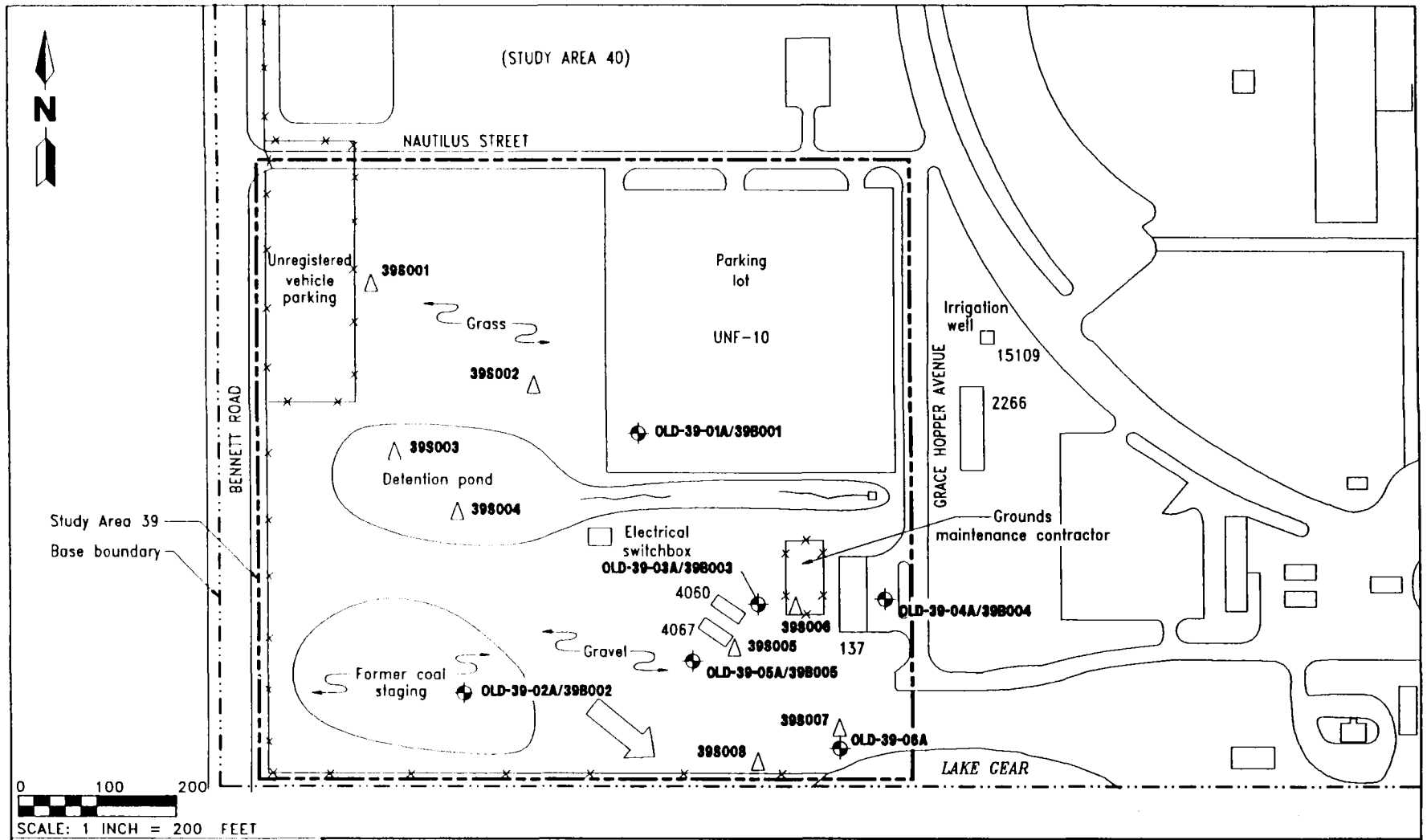

LEGEND

398002 △	Surface soil sample location and designation
OLD-39-06A ⊕	Monitoring well location and designation
⇨	Groundwater flow
UNF	Unnumbered facility

H:\OLD\SA39\ AND T:\B519-38\B519F002 10-94-NP-POP 9-5-97

FIGURE 2-1
SAMPLING LOCATIONS, INITIAL SCREENING

BASE REALIGNMENT AND CLOSURE ENVIRONMENTAL SITE SCREENING REPORT, STUDY AREA 39

NAVAL TRAINING CENTER ORLANDO, FLORIDA

Three surface soil samples were taken in August 1996 and submitted for gross alpha and gross beta analysis after initial groundwater sampling results indicated exceedances of the maximum contaminant level (MCL) for gross alpha (15 picocuries per liter [pCi/ℓ]) and exceedances of background screening levels for gross beta (10.5 pCi/ℓ). These samples were at surface soil locations 39S00901, 39S01001, and 39S01101. Subsurface soil samples were also taken at these locations and submitted for the same analyses.

2.1.4.2 **Subsurface Soil** Five soil borings completed as permanent shallow monitoring wells (OLD-39-01A through OLD-39-05A) were installed during the initial investigation. Prior to selecting the final locations for these soil borings, three widely-spaced piezometers were installed to confirm the groundwater flow direction, which was determined to be southeast toward Lake Gear. Sample locations were also biased toward geophysical anomalies, soil gas "hot spots," and areas of stained soil. Samples 39B00101 and -02 (monitoring well OLD-39-01A) were located in a soil gas hot spot in the central part of the SA (Figure 2-1); samples 39B00201 and -02 (well OLD-39-02A) were located in the former coal storage area; samples 39B00301 and-02 (well OLD-39-03A) were located in a soil gas hot spot west of the maintenance contractor yard; samples 39B00401 and -02 (well OLD-39-04A) were located in a soil gas hot spot east of Building 137; and samples 39B00501 and -02 (well OLD-39-05A) were located adjacent to the solid waste receptacles.

Subsurface soil samples were collected continuously from the surface to the water table (located approximately 8 to 10 feet bls) from each of the soil borings completed as monitoring wells (OLD-39-01A through OLD-39-05A). Samples collected from the 2-foot interval located immediately above the water table were submitted to an approved laboratory for full suite CLP TAL and TCL laboratory analysis, along with TPH and explosives analysis, in accordance with USEPA Level IV DQOs.

Three subsurface soil samples were taken in August 1996 and submitted for gross alpha and gross beta analysis after initial groundwater sampling results indicated exceedances of the MCL for gross alpha (15 pCi/ℓ) and exceedances of background screening levels for gross beta (10.5 pCi/ℓ). These samples were at surface soil locations 39B00901, 39B01001, and 39B01101. Surface soil samples were also taken at these locations and submitted for the same analyses.

2.1.5 **Groundwater** As stated in Paragraph 2.1.4.2 above, five soil borings were completed as permanent shallow monitoring wells (OLD-39-01A through OLD-39-05A) during the initial investigation. In addition, one temporary monitoring well (OLD-39-06A) was installed near the northern shoreline of Lake Gear. Following monitoring well installation and development, each of the newly-installed wells was purged using the low-flow technique. A groundwater sample was then collected from each well and submitted for laboratory analysis of TPH, full suite CLP TAL and TCL compounds, in accordance with USEPA Level IV DQOs. Groundwater samples were also analyzed for gross alpha, gross beta, and laboratory analysis of total suspended solids to aid in evaluation of inorganic data. The field data for the monitoring well installation and sampling program, including the soil boring logs, well construction diagrams, and groundwater sampling forms, are presented in Appendix A.

Several episodes of water-level measurements were also made in the monitoring wells to establish the groundwater flow direction and gradient.

2.2 RESULTS. Results of the initial site screening phase at SA 39 are discussed below and are summarized in the Technical Memorandum, Site Survey Investigations, SAs 39, 40, and 45 (ABB-ES, 1996).

2.2.1 Geophysics The results of the geophysical survey identified 11 magnetic and electromagnetic anomalies in SA 39 (and 6 anomalies in SA 40). Each of these disturbances was further investigated with GPR. These objects were interpreted to be located within 4 feet of the surface, and many were later studied during the UXO survey completed by the Navy's EOD team.

A detailed report of the results of the geophysical survey, including the location of the geophysical anomalies, is provided in Appendix B.

2.2.2 UXO Survey The EOD team excavated 8 of the 11 geophysical anomalies mapped by Harding Lawson Associates (HLA) personnel. The remaining three anomalies were excluded because of their depth or position below the paved parking area in the northeast portion of the SA. The EOD team identified an additional 19 anomalies, all of which were excavated for inspection.

The EOD team found no evidence of any buried UXO at SA 39 (nor at SA 40), such as would have been indicated by fragmental metal, or ordnance components such as fuses, fins, containers, and spent shell casings. The buried material appeared to be related to the historical activities at the site, including survey flags, metal cans, nuts and bolts, and various bits of scrap metal. Based on these findings, the EOD team concluded that further excavation activities to remove any objects beneath the parking area, or greater than 4 feet bls, would be unnecessary.

The report submitted by the Navy's EOD team is provided in Appendix C.

2.2.3 Passive Soil Gas The results of passive soil gas survey indicated the presence of aromatic hydrocarbon, volatile halogenated organic, and SVOCs, as well as chlorinated hydrocarbon gases in the subsurface. The specific compounds belonging to each of these groups were benzene, toluene, ethylbenzene, and xylene; tetrachloroethene (PCE); and C_4-C_9 cycloalkanes/alkenes, respectively.

Aromatic hydrocarbons were mapped throughout the south and southeastern parts of SA 39, and there were several detections in the southwestern and southeastern corners of the parking area. Each of these areas displayed similar relative responses. PCE detections were limited to the southeastern corner of the SA near the waste receptacle loading area. Gases from SVOCs were detected in the same areas as the aromatics, although there was an area of elevated relative response in the southeast corner that was not as strong with the aromatics. The complete results of the survey, including figures presenting the contoured relative response values for the various compounds detected, are provided in Appendix D.

2.2.4 Soil Sampling The analytical results of the surface and subsurface soil samples collected during the initial phase of site screening were evaluated by comparing the concentration of the various compounds detected to screening criteria, including basewide soil background screening levels, Florida Department of Environmental Protection (FDEP) Soil Cleanup Target Levels (SCTLs), and USEPA Region III Risk-Based Concentrations (RBCs). The nature and location of the

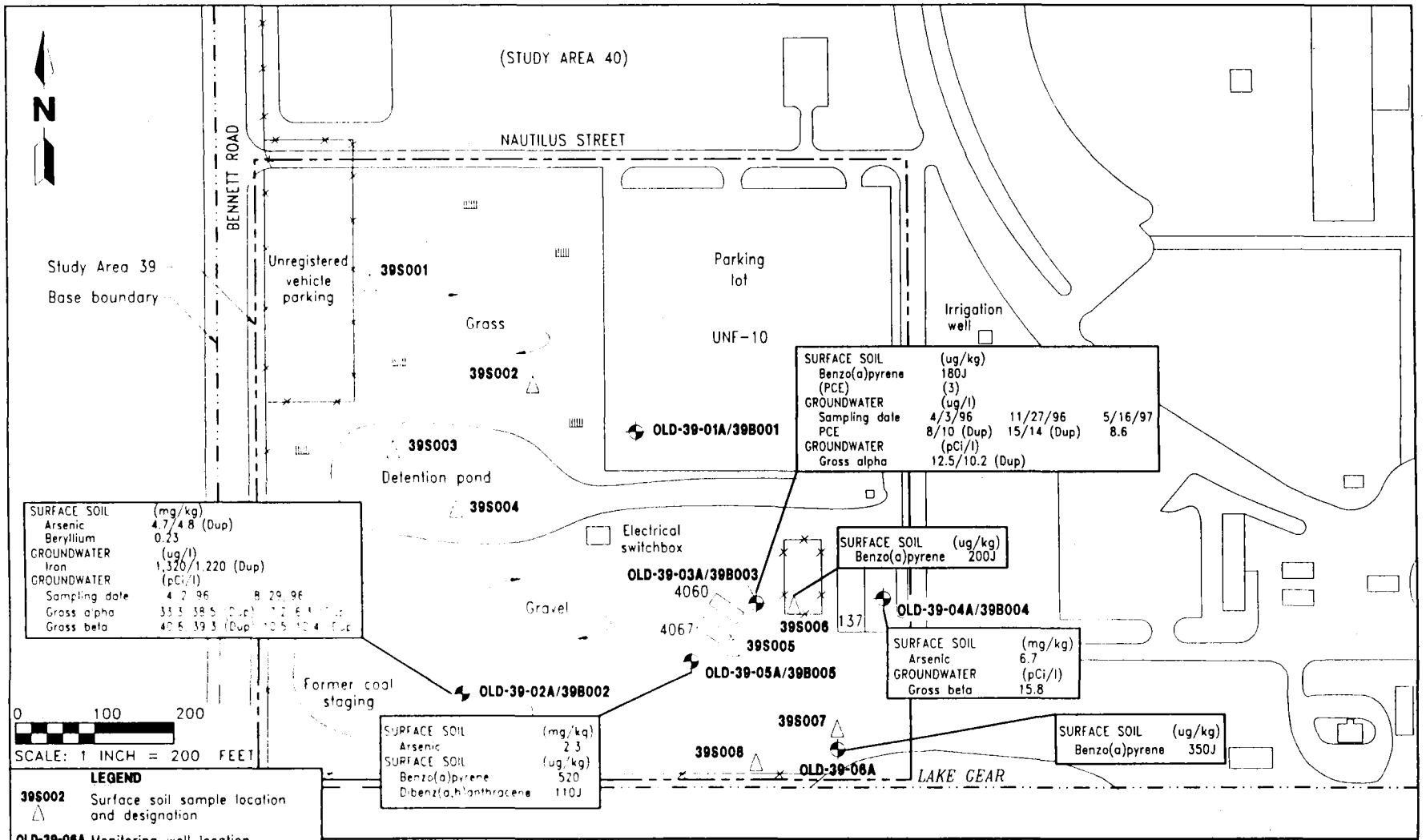

FIGURE 2-2
ANALYTICAL RESULTS, INITIAL SCREENING

BASE REALIGNMENT AND CLOSURE ENVIRONMENTAL SITE SCREENING REPORT, STUDY AREA 39

NAVAL TRAINING CENTER ORLANDO, FLORIDA

exceedances of screening criteria are presented on Figure 2-2 and are discussed below. A summary of the detections in surface and subsurface soil is presented in Appendices E (Summary of Detections) and F (Summary of Analytical Results).

2.2.4.1 **Surface Soil** A variety of organic and inorganic compounds were detected in the surface soil samples at concentrations in excess of screening criteria.

Polynuclear aromatic hydrocarbons (PAHs) that exceeded their respective residential SCTLs were benzo(a)pyrene and dibenz(a,h)anthracene, both with an SCTL of 100 micrograms per kilogram (μg/kg). Benzo(a)pyrene was detected at a concentration of 180 μg/kg in 39B00301, at 520 μg/kg in 39B00501, at 200 μg/kg in 39S00601, and at 350 μg/kg in 39S00701. Dibenz(a,h)anthracene was detected in 39B00501 at a concentration of 110 μg/kg, slightly exceeding screening criteria.

Arsenic was detected at concentrations in excess of the background screening value (1.0 milligrams per kilogram [mg/kg]) in the following samples: 39B00201 (4.7 mg/kg), as well as the duplicate sample collected at the same location; 39B00201D (4.8 mg/kg); 39B00401 (6.7 mg/kg); 39B00501 (2.3 mg/kg); 39S00501 (1.5 mg/kg), as well as the duplicate sample collected at the same location; 39S00501D (1.3 mg/kg); and 39S00601 (1.1 mg/kg).

The three surface soil samples submitted for gross alpha and gross beta analysis (39S00901, 39S01001, and 39S01101) have very low levels of radiological activity. Gross alpha levels range from 0.133 to 0.859 picocuries per gram (pCi/g), and gross beta levels range from 0.267 to 1.48 pCi/g. These values are insignificant when compared to the standard of 5 pCi/g above background for radium-226 and thorium-232 in soil provided in 40 Code of Federal Regulations (CFR) 192, "Health and Environmental Protection Standards for Uranium and Thorium Mill Tailings."

2.2.4.2 **Subsurface Soil** Several inorganic compounds were detected in subsurface soil samples at concentrations in excess of background screening values, but there were no exceedances of residential SCTLs or leaching values.

Organic detections included several PAHs and aromatic hydrocarbons, but there were no detections above screening criteria. In sample 39B00502, pentachlorophenol was detected at a concentration of 55 J (estimated) μg/kg (Figure 2-2). This concentration is much lower than the leaching SCTL of 800 μg/kg. Leachability-based SCTL values do not apply in this instance, however, because no organic compounds were present in groundwater above FDEP groundwater cleanup target levels (GCTLs).

The three subsurface soil samples submitted for gross alpha and gross beta analysis (39B00901, 39B01001, and 39B01101) have very low levels of radiological activity. Gross alpha levels range from 0.035 to 0.596 pCi/g, and gross beta levels range from 0.031 to 0.68 pCi/g. These values are insignificant when compared to the standard of 5 pCi/g above background for radium-226 and thorium-232 in soil provided in 40 CFR 192, "Health and Environmental Protection Standards for Uranium and Thorium Mill Tailings."

<u>2.2.5 Groundwater</u> The analytical results of the groundwater samples collected during the initial phase of site screening were evaluated by comparing the concentration of the various compounds detected to basewide background screening levels (inorganics only), FDEP GCTLs, and tapwater RBCs. The nature and location

of the exceedances are presented on Figure 2-2 and are discussed below. The groundwater analytical results from the Phase I investigation are provided in Appendices E (Summary of

Inorganic, organic, and radionuclide exceedances were detected in groundwater samples collected during the initial screening phase. Iron was the only inorganic compound detected at a concentration in excess of the background screening value. It was detected at 39G00201 (well OLD-39-02) at a concentration of 1,320 micrograms per liter (μg/ℓ) (compared to the background screening value of 1,227 μg/ℓ and a FDEP secondary standard of 300 μg/ℓ). Aluminum was detected at a concentration that exceeded the FDEP secondary standard (200 μg/ℓ) but not the background screening value (4,067 μg/ℓ) at five locations: 39G00101 (well OLD-39-01) at 1,750 μg/ℓ, 39G00201 (well OLD-39-02) at 1,550 μg/ℓ (the duplicate had the same concentration), 39G00301 (well OLD-39-03) at 257 μg/ℓ (the duplicate had a concentration of 273 μg/ℓ), 39G00401 (well OLD-39-04) at 1,160 μg/ℓ, and 39G00501 (well OLD-39-05) at 360 μg/ℓ. PCE was detected in one groundwater sample, 39G00301 (well OLD-39-03), at a concentration of 8 μg/ℓ (the duplicate sample had a concentration of 10 μg/ℓ), versus a Florida and Federal MCL of 3 μg/ℓ.

Radionuclides were detected in excess of background screening values in three samples: 39G00201, 39G00301, and 39G00401. Gross alpha was detected in excess of its background value (13 pCi/ℓ) in 39G00201 and in its duplicate sample at concentrations of 33.3 pCi/ℓ and 38.5 pCi/ℓ, respectively. Gross beta was detected in excess of its background screening value (9.5 pCi/ℓ) in 39G00201 and in its duplicate at concentrations of 40.6 pCi/ℓ and 39.3 pCi/ℓ, respectively; in 39G00301 and its duplicate sample at concentrations of 12.5 pCi/ℓ and 10.2 pCi/ℓ, respectively; and in 39G00401 at a concentration of 15.8 pCi/ℓ. Although background concentrations for gross beta were exceeded, the State of Florida only requires additional analysis and total body dose calculations if the gross beta particle activity exceeds 50 pCi/ℓ (Chapter 62-550.519, Florida Administrative Code).

Monitoring well OLD-39-02 was resampled in August 1996 to confirm the gross alpha and beta radioactivity levels. The levels were significantly lower than during the initial sampling in April 1996: gross alpha levels were 7.2 pCi/ℓ and 6.3 pCi/ℓ (field duplicate), while gross beta levels were 10.5 pCi/ℓ and 10.4 pCi/ℓ (duplicate).

3.0 EVALUATION OF PAHS AND ARSENIC IN SOIL

Upon reviewing the initial site screening results, the Orlando Partnering Team (OPT) tasked HLA to perform supplemental screening designed to evaluate the nature and extent of contamination in the surface soil and groundwater. HLA prepared a workplan for this investigation that was submitted to the OPT (ABB-ES, 1997b). Specific goals of the supplemental screening were to better define the extent of PAH compounds and arsenic in surface soil. The additional soil data permitted a focused risk assessment for surface soils to be completed. Another goal of the supplemental screening was to better define the PCE detected in groundwater (ABB-ES, 1997c). A description of the supplemental field activities and results of the surface soil investigation are presented in this chapter. Details of the groundwater investigation are presented in Chapter 4.0.

3.1 FIELD PROGRAM. The objective of the supplemental soil program was to gather additional soil analytical data so that a Focused Risk Assessment (FRA) could be completed. This required a sampling program in areas of the site not addressed during the original screening investigation. Sampling was performed in a manner consistent with the guidelines prescribed in the POP for NTC, Orlando (ABB-ES, 1997f). The field program is described in detail in a workplan submitted to the Navy in March 1997 (ABB-ES, 1997a).

3.1.1 Immunoassay Screening for PAHs To allow for representative sample collection in the target areas, the original arbitrary grid coordinate system was used. Soil samples were collected every 100 feet and were composited from a depth interval of 0 to 1 foot bls. A total of 48 samples was collected for PAH analysis using immunoassay (IA) analytical techniques (Figure 3-1). Testing is accomplished by first performing an extraction of the collected sample, then mixing the extracted fluid with an enzyme. The enzyme reacts with the PAHs present and, when the mixture is exposed to light, displays an optical signature that varies inversely with the total PAH concentration. Through comparison of the optical density of standard samples with known PAH concentration to that of the test samples, a curve can be generated that correlates optical density to PAH concentration.

3.1.2 PAH and Arsenic Analysis of Confirmation Samples IA analysis allows for a rapid, semiquantitative measurement of the total PAH concentration but cannot distinguish between PAH compounds present. Accordingly, 11 (approximately 20 percent) of the samples were selected from a wide range of PAH concentrations and submitted to an approved laboratory for analysis of PAHs using USEPA Method 3510/8270M, in accordance with USEPA Level IV DQOs. These results would provide confirmation of the accuracy and precision of the IA procedure and quantify the various PAH compounds present.

The 11 confirmation samples were also analyzed for arsenic using the graphite furnace method (USEPA Method 3050-6010) in accordance with USEPA Level IV DQOs.

3.2 RESULTS. The results of the supplemental soil screening for PAHs and arsenic were compared to screening criteria and used to develop an FRA. They are described in detail below.

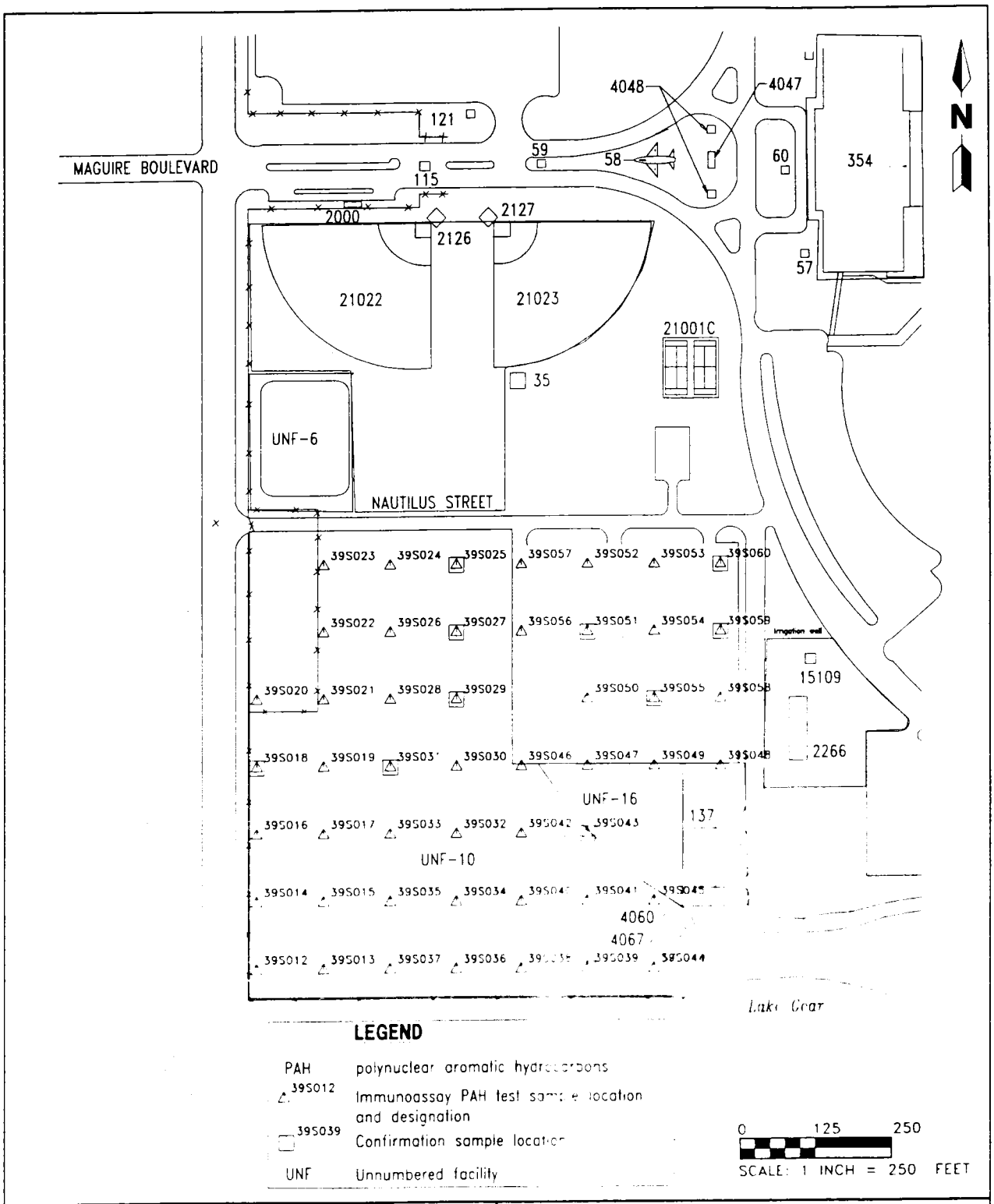

FIGURE 3-1
SAMPLES COLLECTED FOR IMMUNOASSAY PAH TESTING

H:\OLD\SA39\FIG3-1.DWG, PHP-NAB, 04/29/97, 14:32:24, AutoCAD R13

BASE REALIGNMENT AND CLOSURE ENVIRONMENTAL SITE SCREENING REPORT, STUDY AREA 39

NAVAL TRAINING CENTER ORLANDO, FLORIDA

3.2.1 PAHs IA results indicate that there are several extensive areas where the PAH concentration in the surface soil is greater than 1,000 μg/kg (Figure 3-2). The largest area bisects the southeast corner of SA 39 in a southwest to northeast orientation. Another area with elevated PAHs was found in surface soil in the north-central portion of SA 39. A summary of the total PAH results using IA testing for 48 surface soil samples is presented in Appendix G, Table G-1. A listing of the laboratory confirmation results is presented in Appendix G, Table G-2.

Only 3 of the 11 confirmation samples submitted to the laboratory had PAH concentrations in excess of the SCTLs (39S039, 39S043, and 39S060), and all of these were attributed to a single PAH compound, benzo(a)pyrene. The maximum benzo(a)pyrene detection for the 11 samples was 300 μg/kg in 39S043. No PAH detections in any of the samples exceeded the industrial SCTLs. The concentrations of all contaminants that exceed the residential SCTLs are presented on Figure 3-3.

IA results generally compare favorably with the off-site confirmation results, with a calculated correlation coefficient of 0.65 (IA values expressed as greater than 1,000 μg/kg were excluded from the calculation). The favorable comparison between IA and laboratory results is more apparent when the total PAH concentrations are below 200 μg/kg. Concentrations above 200 μg/kg have a relatively high variability (scatter), which can be explained by the fact that as more PAH contamination is encountered in a sample, the complexity of antibody loading to multiple individual PAH receptor sites is much greater. PAH antibodies bind to different PAHs with different affinities.

An alternate evaluation of both screening and confirmatory results is to actually relate these results to a "presence/absence" test, since the primary objective of the field screening program is to determine whether PAH contamination is present at concentrations above screening criteria. The screening criteria used for this evaluation is the residential Florida SCTL for benzo(a)pyrene and dibenz(a,h)anthracene, which is 100 μg/kg. This screening value was compared to the total PAH concentrations, which is conservative, because it represents a total PAH concentration. It is unlikely that the PAHs present are only those with such low SCTLs. IA results indicating the presence or absence of PAHs at concentrations above this screening value are confirmed by the off-site results in 14 out of 16 sampling locations (87 percent) (Appendix G, Table G-2). The other two locations are a false positive (39S041) and a false negative (39S059).

For 16 confirmation samples (11 samples from SA 39 and 5 samples from SA 40), the ratio of carcinogenic PAHs to total PAHs is between 15 percent and 59 percent, with a mean of 40.9 percent, a standard deviation of 11.1, and lower and upper 95 percent confidence interval limits of 35.0 percent and 46.9 percent, respectively. The above sampling statistics can be used to estimate the amount of carcinogenic PAH compounds regarded as "risk drivers" (benzo(a)pyrene and dibenz(a,h)anthracene) from the total PAH concentration of a soil sample (as, for example, with IA). For example, if a sample had a total PAH concentration of 1,000 μg/kg, then there is a 95 percent chance that 35 percent to 46.9 percent (or 350 to 469 μg/kg) of the sample will be composed of carcinogenic PAHs. The complete analytical results are included in the FRA for SAs 39 and 40 (ABB-ES, 1997e).

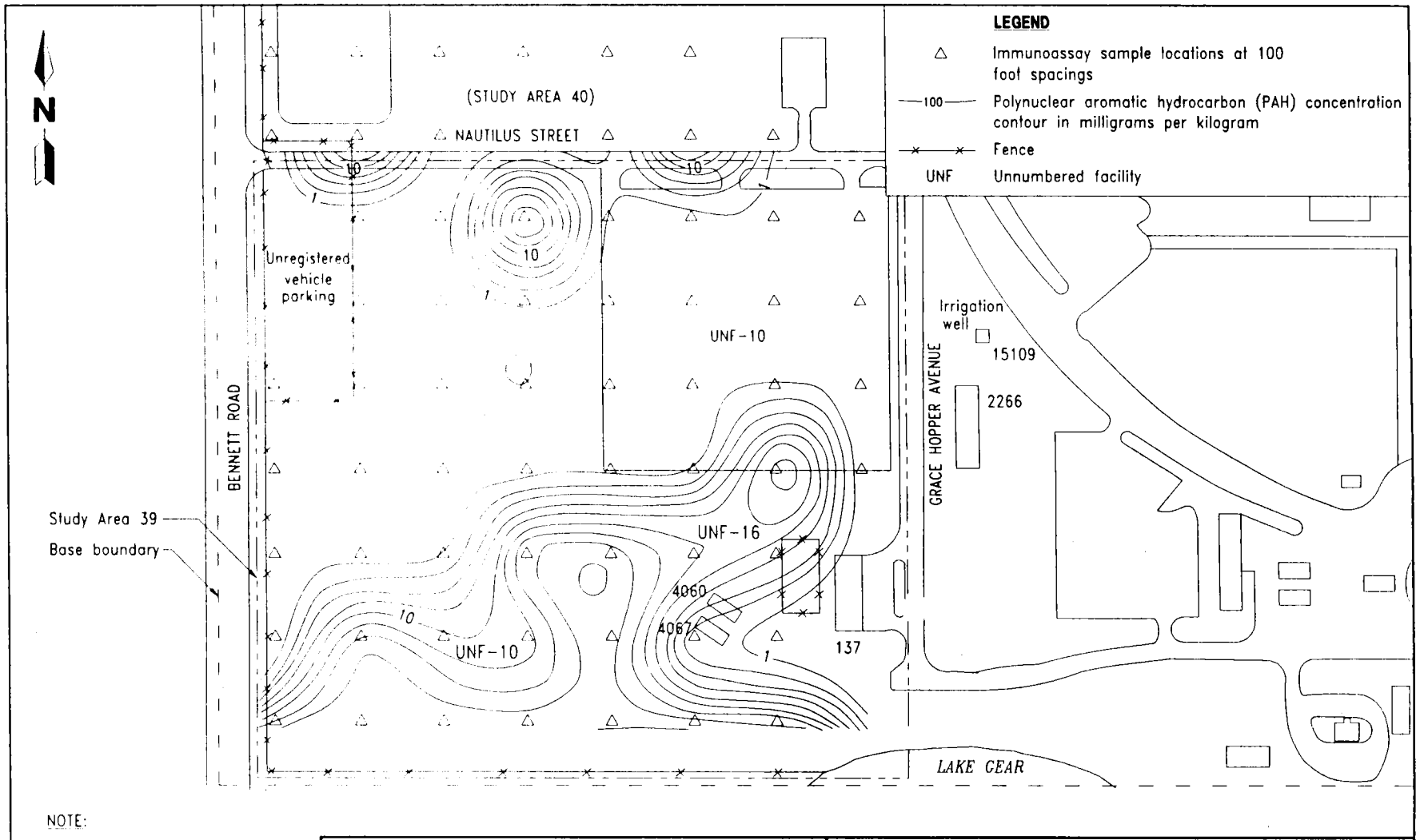

NOTE:

Three contours between decades

0 100 200

SCALE: 1 INCH = 200 FEET

H:\OLD\SA39\85109D04.PDP-NAB 9-24-97

FIGURE 3-2
PAH IMMUNOASSAY TEST RESULTS, SUPPLEMENTAL SCREENING

BASE REALIGNMENT AND CLOSURE ENVIRONMENTAL SITE SCREENING REPORT, STUDY AREA 39

NAVAL TRAINING CENTER ORLANDO, FLORIDA

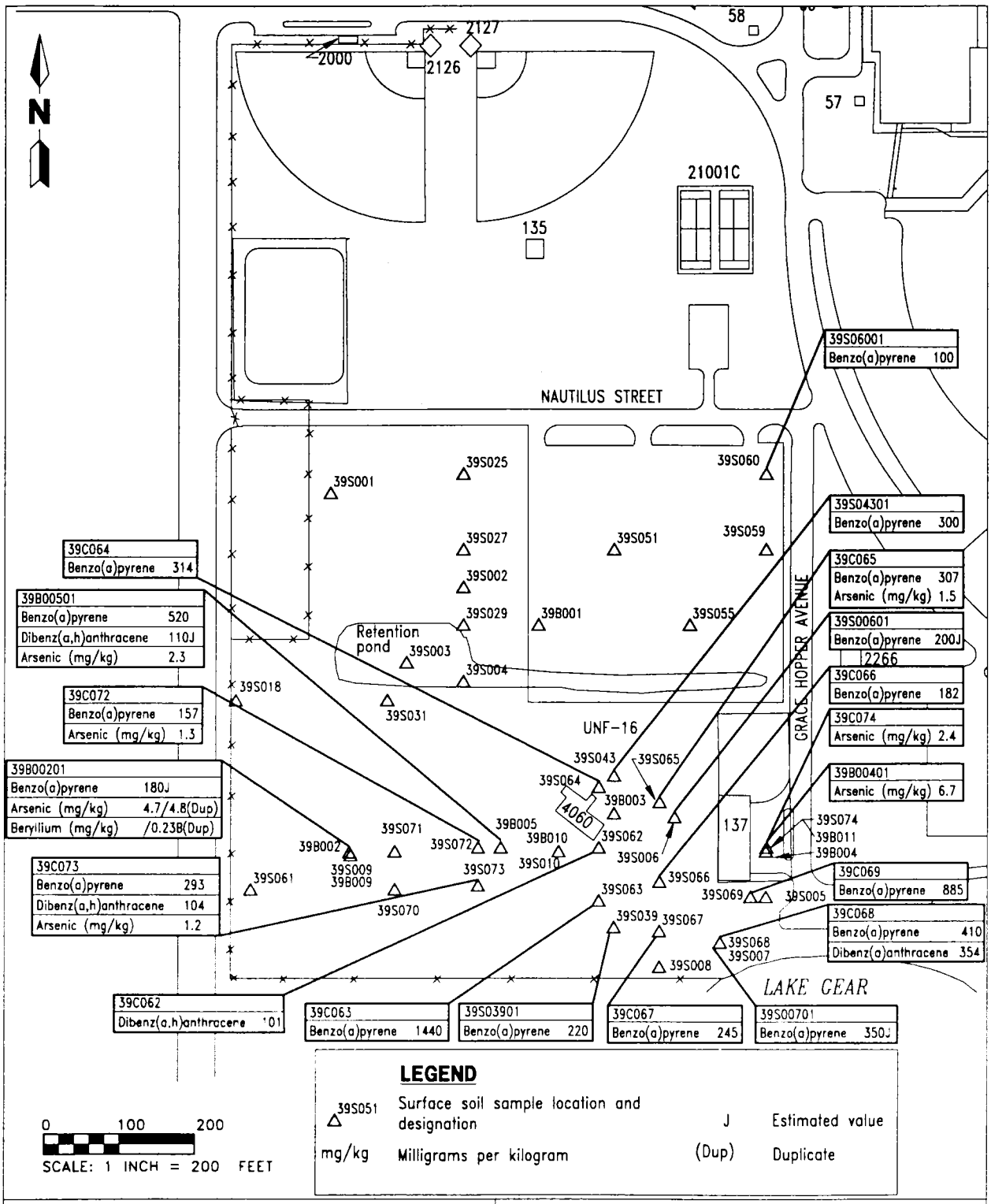

FIGURE 3-3
EXCEEDANCES OF SCREENING CRITERIA IN SURFACE SOIL

K:\02530\02530-09\BCP\02530863.DWG, VC-VC 04/13/99 08:44:14, AutoCAD R14

BASE REALIGNMENT AND CLOSURE ENVIRONMENTAL SITE SCREENING REPORT, STUDY AREA 39

NAVAL TRAINING CENTER ORLANDO, FLORIDA

3.2.2 Arsenic Only 1 of the 11 confirmation samples had an arsenic concentration that exceeds the background screening value (39S043 at a concentration of 2.7 mg/kg). Both the frequency and magnitude of the arsenic detections suggest that arsenic contamination is not significant in surface soil.

3.2.3 Focused Risk Assessment The soil analytical data were used to develop an FRA for SAs 39 and 40 combined. The FRA was performed to assess whether or not the exceedances of SCTLs for PAHs and arsenic pose health risks to individuals under the most conservative reuse scenario (i.e., residential). The FRA was conducted in a phased approach whereby if the future residential scenario resulted in unacceptable risk, then recreational and industrial land-use scenarios would be evaluated. The FRA consisted of five tasks: (1) evaluation of the data, (2) identification of the chemicals of potential concern, (3) exposure assessment, (4) toxicity assessment, and (5) risk characterization. Collectively these components were used to estimate the potential magnitude of exposure and the risks resulting from the estimated exposure conditions.

The results of the FRA demonstrated that the potential future Reasonable Maximum Exposure (RME) for residential use of SAs 39 and 40 resulted in a slightly elevated cancer risk of 1×10^{-5}, which exceeds the cancer risk target established by the State of Florida but is within the acceptable risk range established by the USEPA. The potential future average residential risk posed by exposure to surface soil at SAs 39 and 40 was at an acceptable risk level of 1×10^{-6}. The RME residential cancer risk was based on exposure to arsenic and two carcinogenic PAHs (benzo(a)pyrene and dibenz(a,h)anthracene), which were detected in surface soil. The risk range of the two scenarios evaluated (maximum and average risks) provides risk managers additional perspective into the risks presented by the SAs as a whole. While these conclusions have not been verified for SA 39 alone, it is not expected that they would change substantially if SA 40 results were extracted to a separate database.

The FRA also evaluated the reduction of the risk for exposure to arsenic- or PAH-contaminated soil via remedial action and its effect on lowering the overall surface soil pathway cancer risk estimate. First, remedial goal options (RGOs) were identified. The RGOs established for surface soil at SAs 39 and 40 were the Florida residential SCTLs for the two PAHs and the NTC, Orlando background screening concentration for arsenic.

Based on the RGOs established, the following statements regarding the reduction in the predicted cancer risks were made:

- Remediation of arsenic-contaminated soil to background levels (1 mg/kg) would result in a predicted RME residential cancer risk of 2.5×10^{-6}. This risk level is greater than the FDEP's acceptable cancer risk target of 1×10^{-6}.

- Remediation of benzo(a)pyrene- and dibenz(a,h)anthracene-contaminated soils to the residential Florida SCTLs would result in a predicted RME residential cancer risk of 1.6×10^{-6}; this risk level is greater than FDEP's acceptable cancer risk target of 1×10^{-6}.

In summary, the FRA predicted that the presence of arsenic and two carcinogenic PAHs in surface soil at SAs 39 and 40 may be presenting an unacceptable cancer risk of 1×10^{-5} based on exposure of a future resident to surface soil. Although

remediation of surface soil to RGOs would reduce the total predicted cancer risk, the remaining risk upon completion of the remedial action would still present an unacceptable predicted cancer risk of 4.1×10^{-6}.

In order that risk managers gain perspective on the viability of remediating surface soil at the SA and the resultant reduction in risk that would be achieved, the Navy requested HLA to develop cost estimates for various remedial options addressing contaminated surface soil at the SA. The remedial options for which cost estimates were developed consisted of a cross-section of potentially viable technologies to address contaminated surface soil at the SA and included the following:

- treatment (*In Situ* Stabilization)
- containment (Soil Cover/Capping)
- disposal (Excavation and Off-Site Disposal)

The cost estimates developed were presented to the OPT in July 1997 and varied from approximately $500,000 (treatment) to $1.6 million (disposal)(ABB-ES, 1997d). At that time, the Navy requested additional information regarding the vertical extent of surface soil contamination at the SAs. This is because the cost estimates prepared assumed a depth of contamination of 2 feet, which, if less, would reduce the volume of contamination and, hence, the cost of remediation. Accordingly, HLA prepared a sampling and analysis plan for SAs 39 and 40 to evaluate the vertical distribution of arsenic and PAHs in surface soil. This plan was submitted to the Navy on August 27, 1997 (ABB-ES, 1997g). The sampling and analysis plan was implemented in September 1997 and the results are presented below.

<u>3.2.4 Vertical Delineation of PAHs and Arsenic</u> As was stated in Subsection 3.2.3, above, surface soil samples were collected from 14 additional locations (39S061 through 39S074, Figure 3-3) in late September 1997 to delineate the vertical distribution of PAHs and arsenic in the upper two feet of soil. Samples were collected from the intervals 0 to 0.5 feet bls, 0.5 to 1.0 feet bls, and 1.0 to 2.0 feet bls at each location. For these sample locations, the chemical boxes display 39<u>C</u>XXX instead of 39SXXX (Figure 3-3). The values in the chemical boxes represent a weighted combined average for the three samples at a location (e.g., 39S06101, 39S06102, and 39B06101). The concentrations of all contaminants that exceed the residential SCTLs are presented on Figure 3-3.

The most important compounds from a risk perspective during the vertical delineation were benzo(a)pyrene and arsenic. Benzo(a)pyrene was detected in 28 of 34 samples at concentrations of up to 2,800 μg/kg (unweighted), with an average concentration of 438 μg/kg. Arsenic was detected in 22 of 25 samples at concentrations of up to 3.8 mg/kg (unweighted), with an average concentration of 1.2 mg/kg. Statistically, there were no significant differences between samples collected within the three intervals, although the interval from 0.5 to 1.0 feet bls appeared to have slightly higher concentrations of contaminants. The summary of detections in surface soil is presented in Table E-1 of Appendix E. The complete summary of analytical results is presented in Appendix F.

4.0 EVALUATION OF PCE IN GROUNDWATER

Supplemental groundwater screening investigations to evaluate chlorinated hydrocarbons (hereinafter referred to as PCE) in groundwater were conducted in two phases described below. Phase I began with the installation of several shallow monitoring wells around monitoring well OLD-39-03A where PCE was detected above its Federal and State MCL during initial screening at SA 39. The results of the Phase I investigation showed PCE concentrations in several wells above the MCL; therefore, the OPT requested a more extensive sampling program to determine the nature and extent of PCE in groundwater. Supplemental work performed in response to that request is referred to as Phase II.

4.1 PHASE I FIELD PROGRAM. The objective of the Phase I field program was to confirm the presence of PCE in groundwater at concentrations in excess of the MCL as was reported in one groundwater sample from the initial site screening investigation. Accordingly, five additional monitoring wells were installed in the vicinity of well OLD-39-03A.

4.1.1 Monitoring Well Installation and Groundwater Sampling Five new monitoring wells were installed during the Phase I investigation (Figure 4-1). Four of the wells are shallow wells screened to bracket the water table. These four wells were placed 30 feet away from well OLD-39-03A in a cross pattern oriented in the direction of groundwater flow: monitoring well OLD-39-09A was installed in the downgradient direction, OLD-39-11A was placed upgradient, and the remaining two wells (OLD-39-08A and OLD-39-10A) were placed sidegradient to groundwater flow. The four shallow wells were installed with direct push technology (DPT) using the TerraProbe℠, and they were constructed as microwells. The wells were constructed with 3/4-inch-diameter polyvinyl chloride (PVC) riser and 0.010-inch slotted screen. The screened section was prepacked with a 20/30 silica sand filter pack. Nine feet of slotted screen was used for each well. A 2-foot thick layer of bentonite was placed above the filter pack as a seal, and the remainder of the borehole was filled with grout. The microwells were completed at the surface with a concrete pad, bolt-down vault, and locking cap.

Because PCE can be present in the environment as a dense nonaqueous-phase liquid (DNAPL), the fifth monitoring well was constructed as an intermediate well to determine if PCE was present at intermediate depths in the vicinity of well OLD-39-03A. Prior to installing the fifth monitoring well, soil samples were collected with a split-spoon sampler from the surface to the shallowest clay layer encountered in the surficial aquifer. The samples indicated the presence of a sandy clay layer at a depth of 31 to 34 feet bls. The shallowest clay in the Hawthorn Group was encountered at a depth of approximately 80 feet bls. The zone between the two clay layers is composed primarily of silts and sands with thin, discontinuous lenses of finer-grained material. The fifth well, designated OLD-39-07B, was placed approximately 10 feet downgradient of well OLD-39-03A and was screened immediately above the shallow clay layer.

All newly installed monitoring wells were developed to remove as many fine soil particles as practical. This was accomplished by pumping groundwater through the well screen at varying flow rates to ensure that the sand pack functioned

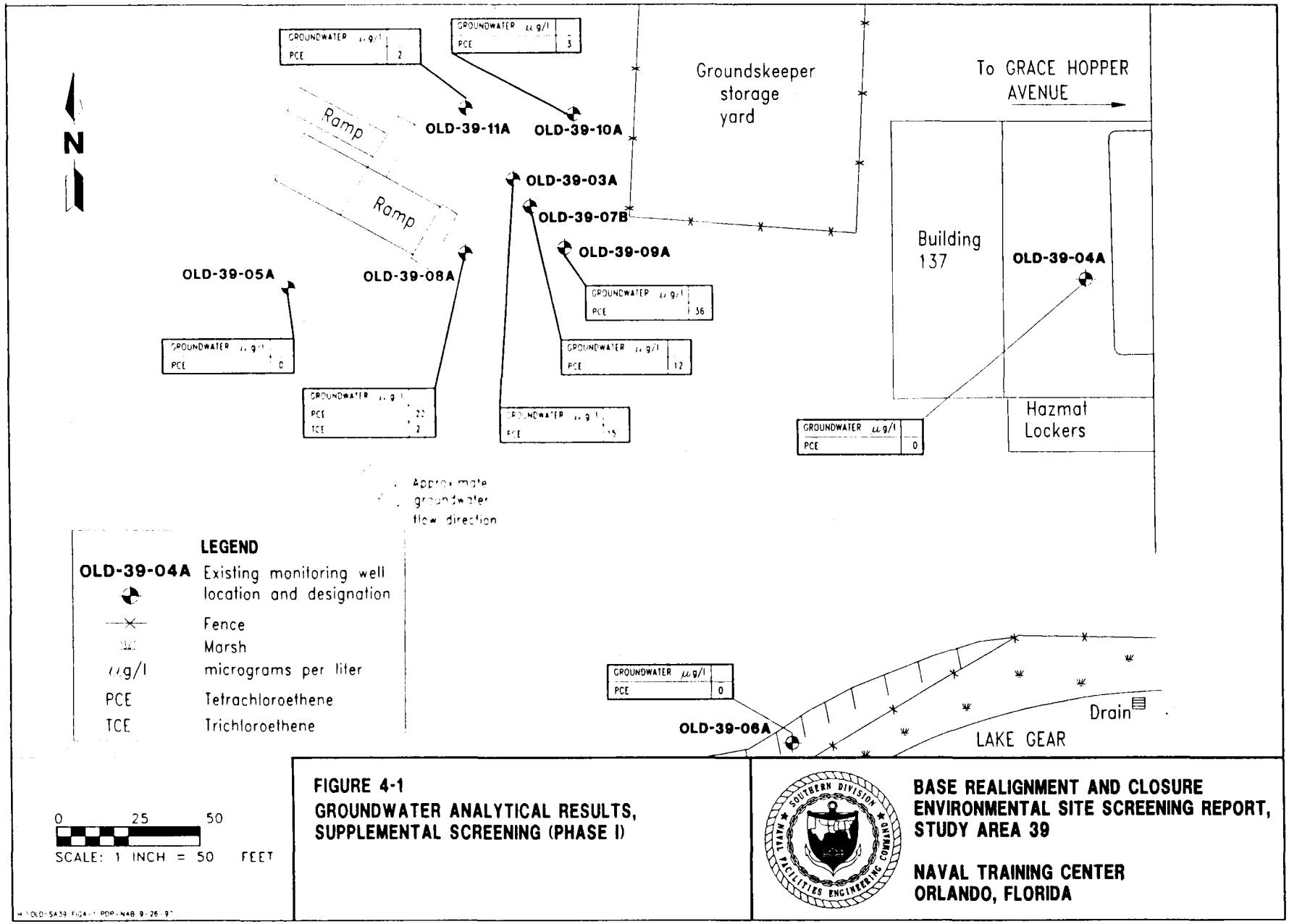

FIGURE 4-1
GROUNDWATER ANALYTICAL RESULTS, SUPPLEMENTAL SCREENING (PHASE I)

BASE REALIGNMENT AND CLOSURE ENVIRONMENTAL SITE SCREENING REPORT, STUDY AREA 39

NAVAL TRAINING CENTER ORLANDO, FLORIDA

properly. No fewer than three well volumes were removed during development, which continued until the turbidity, pH, temperature, and conductivity measurements had stabilized.

Following development and a period of stabilization, the five new wells and OLD-39-03A were sampled using the low-flow method. The groundwater samples were analyzed for the presence of VOCs using USEPA Method 524.2. All of the field data sheets associated with monitoring well installation and sampling during the Phase I supplemental work, including the soil boring logs, well construction diagrams, and groundwater sampling data sheets, are provided in Appendix A.

4.1.2 Results Chlorinated hydrocarbons were detected in the groundwater samples collected from OLD-39-03A and each of the five newly installed wells. PCE was detected at all six well locations, and trichloroethene (TCE) was detected at one of the new wells (OLD-39-08A, Figure 4-1). The concentration of PCE ranged from 2 $\mu g/\ell$ at the upgradient shallow well location (OLD-39-11A) to 36 $\mu g/\ell$ at the shallow downgradient well location (OLD-39-09A), compared with a Florida MCL of 3 $\mu g/\ell$. TCE was also detected at a concentration of 2 $\mu g/\ell$ at OLD-39-08A, compared with a Florida MCL of 3 $\mu g/\ell$. The results indicate that the PCE/TCE plume extends to a distance of at least 30 feet in all directions from OLD-39-03A and that concentrations increase downgradient from that well. MCL exceedances for PCE detected in the sample collected from the intermediate well indicated that, at a minimum, the PCE plume extended downward to the top of the shallow clay layer. The groundwater analytical results from the Phase I investigation are provided in Appendices E (Summary of Detections) and F (Summary of Analytical Results).

4.2 PHASE II FIELD PROGRAM. The objective of the Phase II field program was to collect the additional data necessary to define the nature and extent of the PCE plume in groundwater. This was to be accomplished through a groundwater screening program using DPT, followed by the installation of permanent monitoring well clusters to confirm the screening results. A description of the various tasks and results of the Phase II supplemental field program is presented below.

4.2.1 Screening

4.2.1.1 Cone Penetrometer Testing (CPT) Prior to groundwater collection and analysis, CPT was performed to evaluate the lithology so that discrete depth intervals could be targeted for groundwater sample collection. Locating lenses of finer-grained soil was important because DNAPLs (including PCE) may accumulate there. CPT utilizes hydraulics to advance a piezocone, which is a device to measure lithologic parameters. Resistance to penetration at the piezocone tip and at the outer surface of the sleeve is recorded. Subsurface pore pressure is monitored with a pressure transducer. These measurements are recorded by a field computer, and the data are compared to empirically derived measurements or parameters characteristic of different soil types. Piezocone data provide soil classifications consistent with the Unified Soil Classification System (USCS).

CPT was performed at eight locations during the investigation (Figure 4-2). The piezocone was pushed to the top of the Hawthorn Group at seven of the eight locations (refusal was encountered at a depth of approximately 25 feet bls at location 39CPT07).

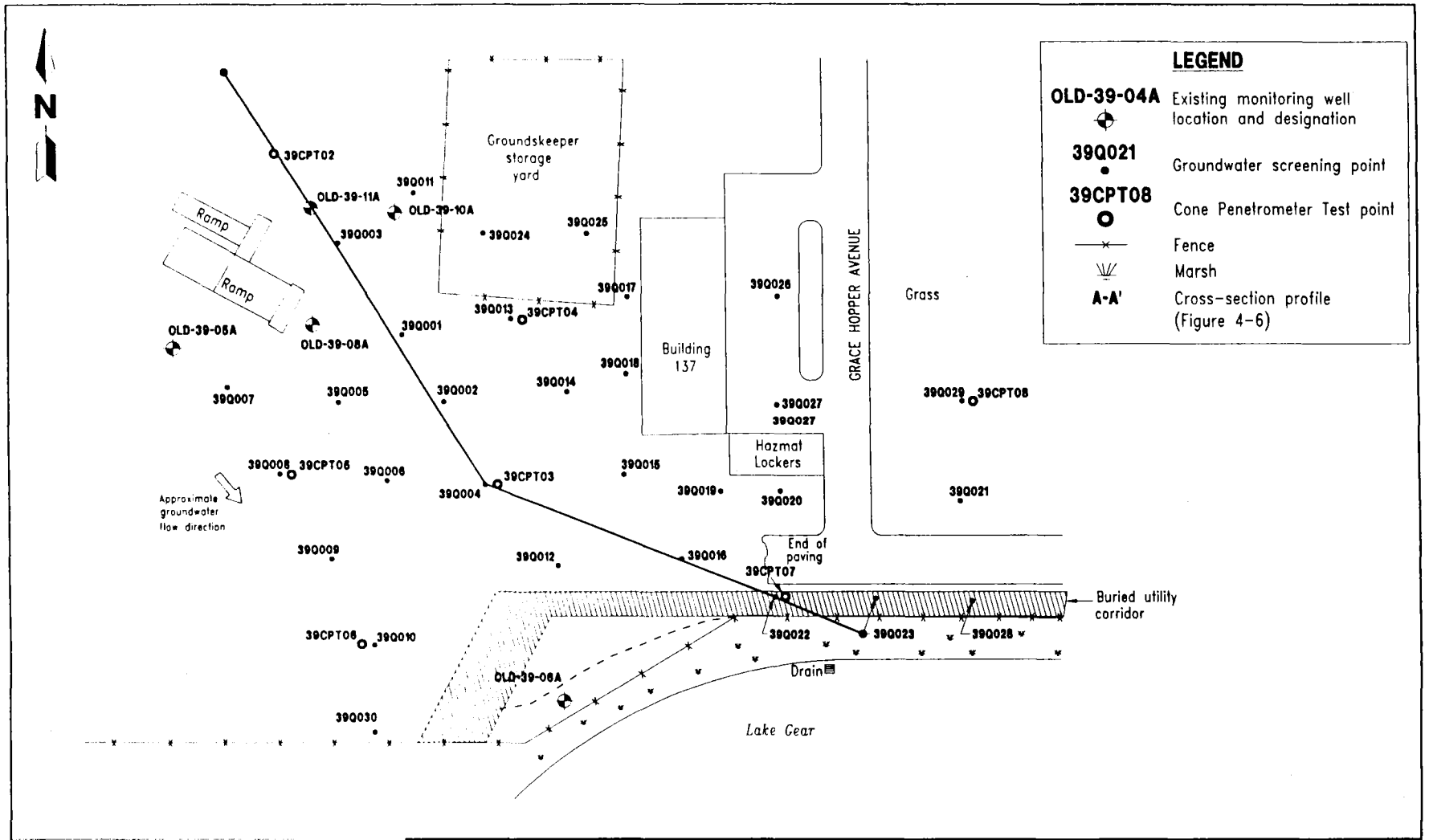

0 40 80
SCALE: 1 INCH = 80 FEET

FIGURE 4-2
CONE PENETROMETER TESTING AND GROUNDWATER SCREENING POINTS

BASE REALIGNMENT AND CLOSURE ENVIRONMENTAL SITE SCREENING REPORT, STUDY AREA 39

NAVAL TRAINING CENTER ORLANDO, FLORIDA

4.2.1.2 Groundwater Screening The objective of the groundwater screening program was to evaluate the general distribution of PCE within the surficial aquifer in order to site permanent monitoring wells.

Samples collected for onsite analysis were analyzed for target VOCs using a gas chromatograph (GC) field laboratory. The analytical methods used were based on standard USEPA Methods SW-846, 5030 (purge and trap preparation), 8000A (GC calibration), and 8010A (halogenated volatile organics) with modifications for field analysis. The specific target compounds were PCE, TCE, 1,1 dichloroethene (DCE), trans-1,2-DCE, and cis-1,2,-DCE. Samples were analyzed using an SRI-8610 GC with a carbosieve trap and a Tenax trap. Two detectors, a 10.2-electron-volt photoionization detector and a dry electrolytic conductivity detector were used.

The quality control criteria for the onsite analytical method were established to monitor method performance. An initial three-point calibration for quantification (low, mid, and high-range concentration) was performed for each instrument. Instrument stabilities were monitored every 24 hours with a calibration standard at the mid-range concentration. The quantification performance criterion for operation was the agreement of the check standard with the three-point calibration curve to within 30 percent. Field samples were to be analyzed only if no more than one compound per detector in the check standard exceeded these criteria. If the check standard did not meet this criterion, then a second check standard was analyzed. If this second check failed to meet the criterion, then a new calibration curve was prepared. The identities of the target compounds were based on comparison with the retention times for the standards. Retention time windows of plus or minus 3 percent were established, based on the most recent calibration curve. In some instances, the peak was so broad that a 3 percent retention time window was not adequate and operator judgement was applied.

Periodic method blanks composed of deionized water were analyzed to confirm that no target compounds were introduced during sampling handling and analysis. The method blank criterion was met if no target compounds were present above the reporting limit for the instrument. A surrogate solution containing bromo-flourobromine was injected into each sample at a known concentration to determine percentage recoveries. The recovery range of 50 to 150 percent was established for water samples, and the recovery range of 30 to 170 percent was established for soil samples as one of the operating criteria for onsite analysis.

<u>Shallow Groundwater Screening</u>. Groundwater sample collection was completed using DPT from locations on 50-foot centers. Sample collection began near OLD-39-03A and the sampling grid was extended in a direction downgradient of groundwater flow. Screening extended to within approximately 20 feet north of the southern boundary of the base, where a utility corridor prevented further sampling. The sampling grid eventually encompassed an area measuring approximately one acre in the southeast corner of SA 39. To the east, screening extended approximately 30 feet east of Grace Hopper Avenue (Figure 4-2), which is the western portion of SA 30. A total of 30 screening points was completed during the study.

Shallow (30 feet bls or less) groundwater collection during the early stages of the investigation was performed with HLA TerraProbe℠. The TerraProbe℠ system utilizes a 2-foot retractable screen for groundwater sample collection. The sampler is composed of a telescoping assembly containing a 2-foot length of stainless steel well screen fitted with an expendable tip. This assembly is

hydraulically advanced with a series of rods. The screen was exposed in the subsurface by retracting the outer casing of the sample device, allowing natural hydrostatic pressure to force groundwater into the sampler. Teflon™ tubing was then lowered down to the screened interval, and groundwater was purged out using a peristaltic pump.

TerraProbe℠ operations were limited to the first six screening locations because finer-grained soils were plugging the sampling device. A larger DPT rig was utilized to collect the remaining groundwater samples.

Deep Groundwater Screening. A 25-ton DPT rig was utilized to obtain samples from the surficial aquifer. The DPT rig utilized the hydro-trap groundwater sampler, which consists of a telescoping assembly containing a 1-foot length of stainless steel well screen fitted with a cone tip. This assembly is hydraulically advanced with a series of rods in the same manner as the piezocone. The screen is exposed in the subsurface by retracting the outer casing of the sample device, allowing natural hydrostatic pressure to force groundwater into the sample collection chamber. The sample collection chamber and screen assembly are then lifted to the surface to recover the sample. To collect groundwater from multiple discrete intervals, the hole is reoccupied with a decontaminated sample collection chamber and screen assembly and the hydro-trap is advanced to the next sampling interval. Sample integrity is maintained by using O-rings to form watertight seals above and below the sample chamber, preventing cross contamination.

Sample collection was performed at a 5-foot interval beginning at the water table to as deep as 80 feet bls, depending on the analytical results and lithology at the sample points. In general, samples were collected every 5 feet from 15 to 35 feet bls, and sampling extended deeper in some areas, as appropriate. Approximately 150 groundwater samples were collected for onsite analysis. Groundwater samples were analyzed onsite for PCE and two of its daughter products, TCE and cis-1,2-DCE). Twenty percent of the samples were submitted to an off-site laboratory for confirmatory analysis. Off-site samples were analyzed for VOCs using USEPA Method 524.2.

4.2.1.3 **Soil Screening** Soil screening was performed during the Phase II investigation to determine the presence of VOCs. Results of the groundwater screening investigation were used to target likely source area(s) for the release of PCE into the subsurface. Because the highest concentrations at the water table were detected in the vicinity of screening points 39Q001 and monitoring well OLD-39-03A, soil screening began there. Soil samples were collected at a 5-foot interval from the surface to the water table (approximately 12 feet bls). Ten borings (39B007 through 39B016) were placed along a grid with a 20-foot spacing in that area (Figure 4-3). The samples were collected with a stainless steel hand auger, scanned for organic vapors using a flame ionization detector (FID), and placed in sample jars. All of the soil samples were analyzed onsite for the same target compounds as the groundwater. Twenty percent of the samples were submitted to an off-site laboratory for confirmation analysis using USEPA Method 8010. No positive FID readings were noted during any of the soil sampling, so all confirmation samples were collected at the interval just above the water table.

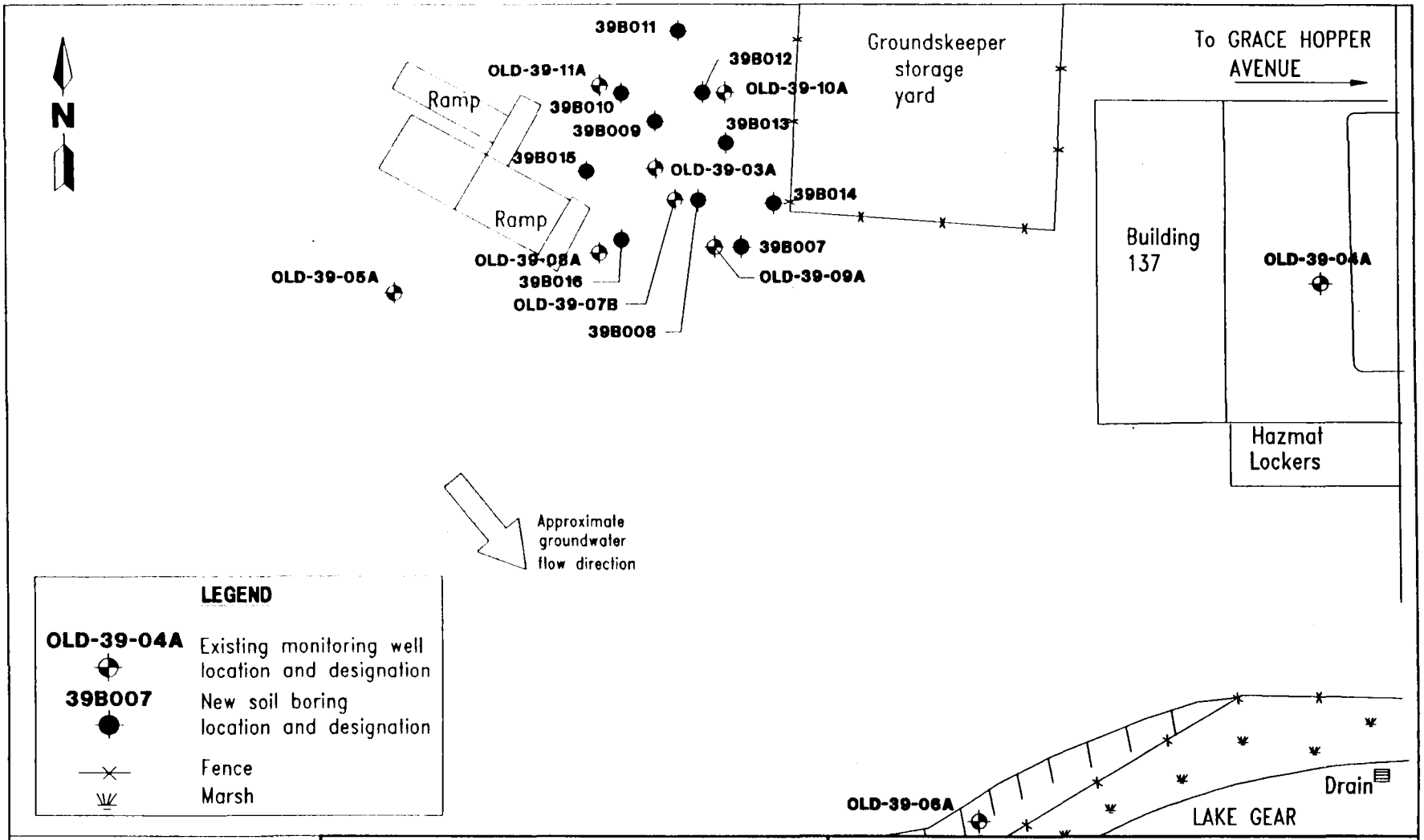

0 25 50
SCALE: 1 INCH = 50 FEET

H:\OLD\SA39\ AND T:\B519-38\WP3940 KHM-NP-PDP 9-5-97

FIGURE 4-3
SOIL BORING LOCATIONS

BASE REALIGNMENT AND CLOSURE
ENVIRONMENTAL SITE SCREENING REPORT,
STUDY AREA 39

NAVAL TRAINING CENTER
ORLANDO, FLORIDA

4.2.1.4 Results

CPT. The data generated during the CPT survey indicate that the upper 30 feet of the shallow aquifer is composed of silt and sand-sized particles with limited percentages of clay and organic matter. In the east-central part of the investigation near Building 137, a hardpan layer of undetermined thickness exists at a depth of approximately 25 feet bls. The hardpan layer is composed of sandy clay and was identified during the first phase of supplemental screening. This layer was found throughout the investigation area. The upper surface of the clay slopes south and westward from the north and east sides of the investigation area. The clay layer thins across the area from a maximum thickness of over 3 feet in the northwest corner to less than 1 foot in the southeast corner. The thinning of the clay is accompanied by an increase in the percentage of sand within the unit. In the far southeast corner the unit grades to a clayey sand.

The material beneath the sandy clay is comparable to the upper part of the subsurface with a preponderance of sand and silt. This holds true to a depth of approximately 80 feet bls, where the shallowest clay within the Hawthorn Group was encountered. Physical data gathered during the CPT survey are presented in Appendix H.

Groundwater Screening Results from DPT Samples. The only chlorinated hydrocarbon compounds detected during screening were PCE and TCE. PCE was detected at more locations and at significantly higher concentrations than TCE throughout the area of concern. TCE was only detected in 5 of the 158 samples analyzed onsite, at a maximum concentration 2.2 $\mu g/\ell$. PCE concentrations exceeded 50 $\mu g/\ell$ in 19 samples. A listing of the detections at the 30 screening points is presented in Appendix I, Table I-1, and the onsite analytical screening results of the onsite mobile field laboratory are provided in Appendix I, Table I-2.

The screening results define the general horizontal and vertical limits of the PCE plume. The geometry of the plume was measured at three key depth intervals: 15 to 17 feet bls, 28 to 30 feet bls, and 35 to 37 feet bls.

At 15 to 17 feet bls (approximately 3 to 4 feet below the water table), PCE detections extend from approximately 50 feet upgradient of the original hot well (OLD-39-03A) to a distance of approximately 200 feet downgradient from that point. At this interval, the plume is elliptical in plan view, and the long axis is oriented with the direction of groundwater flow (Figure 4-4). The maximum total PCE concentration at 15 to 17 feet bls was 38 $\mu g/\ell$ at screening point 39Q001, located 50 feet downgradient from OLD-39-03A. PCE was not detected at screening points placed along the southern property line (39Q010, 39Q012, 39Q016, and 39Q020) suggesting that the shallow portion of the plume does not exit base property.

The highest PCE concentrations were detected in samples collected from the 28- to 30-foot interval. At screening point 39Q014, a total PCE concentration of 234 $\mu g/\ell$ was detected at that interval. The plume at that interval is larger, extending from screening point 39Q003 to at least as far downgradient as 39Q022 (Figure 4-5). The absence of any PCE detections at screening points 39Q001, 39Q008, 39Q030, 39Q011, 39Q025, and 39Q029 defines the western and northern limits of the plume. The data fail to completely define the southern and eastern

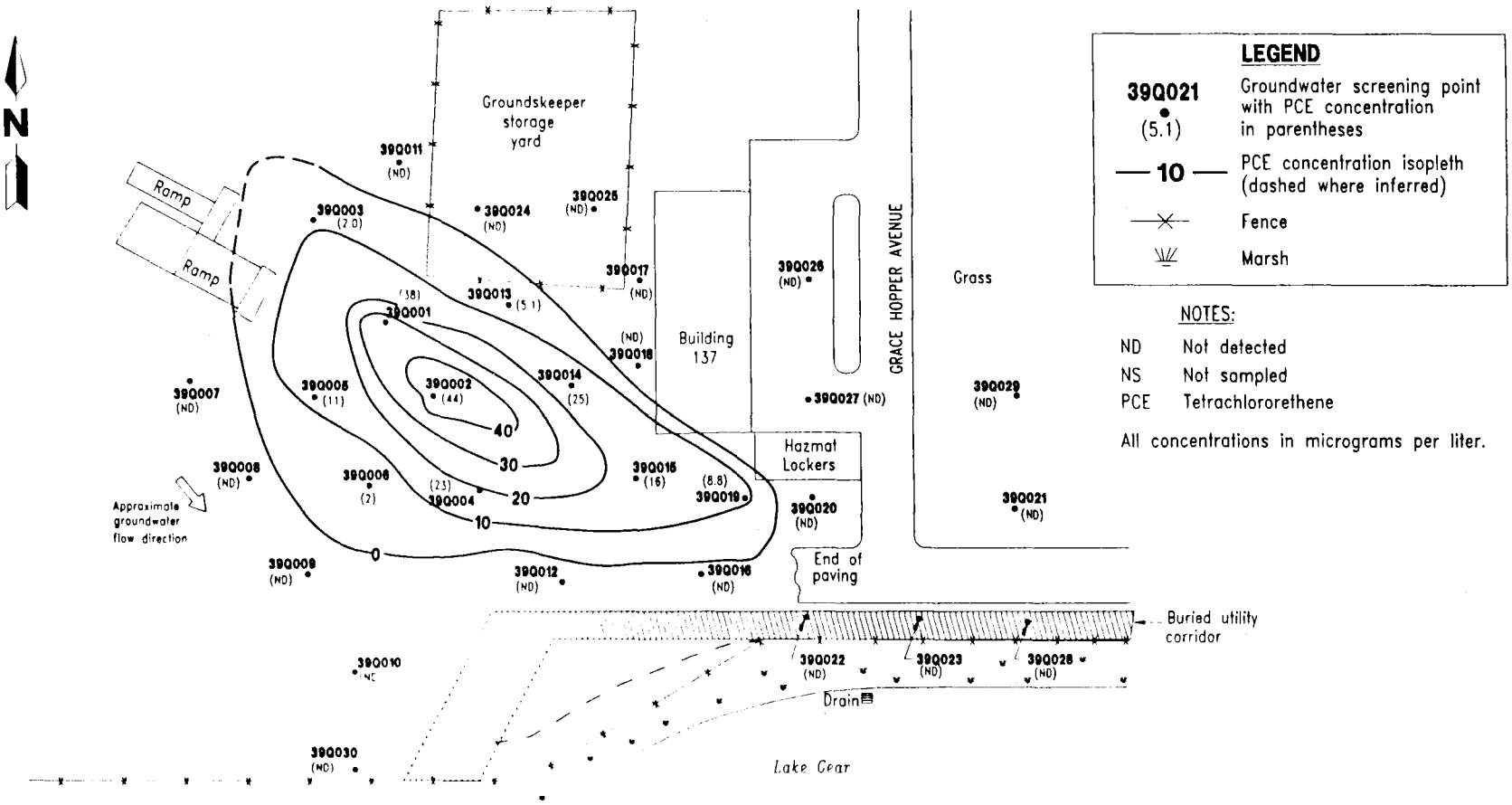

LEGEND

39Q021 ● (5.1)	Groundwater screening point with PCE concentration in parentheses
—10—	PCE concentration isopleth (dashed where inferred)
—×—	Fence
⩛	Marsh

NOTES:

ND Not detected
NS Not sampled
PCE Tetrachlororethene

All concentrations in micrograms per liter.

0 40 80
SCALE: 1 INCH = 80 FEET

H:\OLD\SA39\FIG4-4.DWG, PDF-NAB 09.25.97 14:57:06, AutoCAD R12

FIGURE 4-4
PCE CONCENTRATIONS AT 15 TO 17 FEET BELOW LAND SURFACE

BASE REALIGNMENT AND CLOSURE ENVIRONMENTAL SITE SCREENING REPORT, STUDY AREA 39

NAVAL TRAINING CENTER ORLANDO, FLORIDA

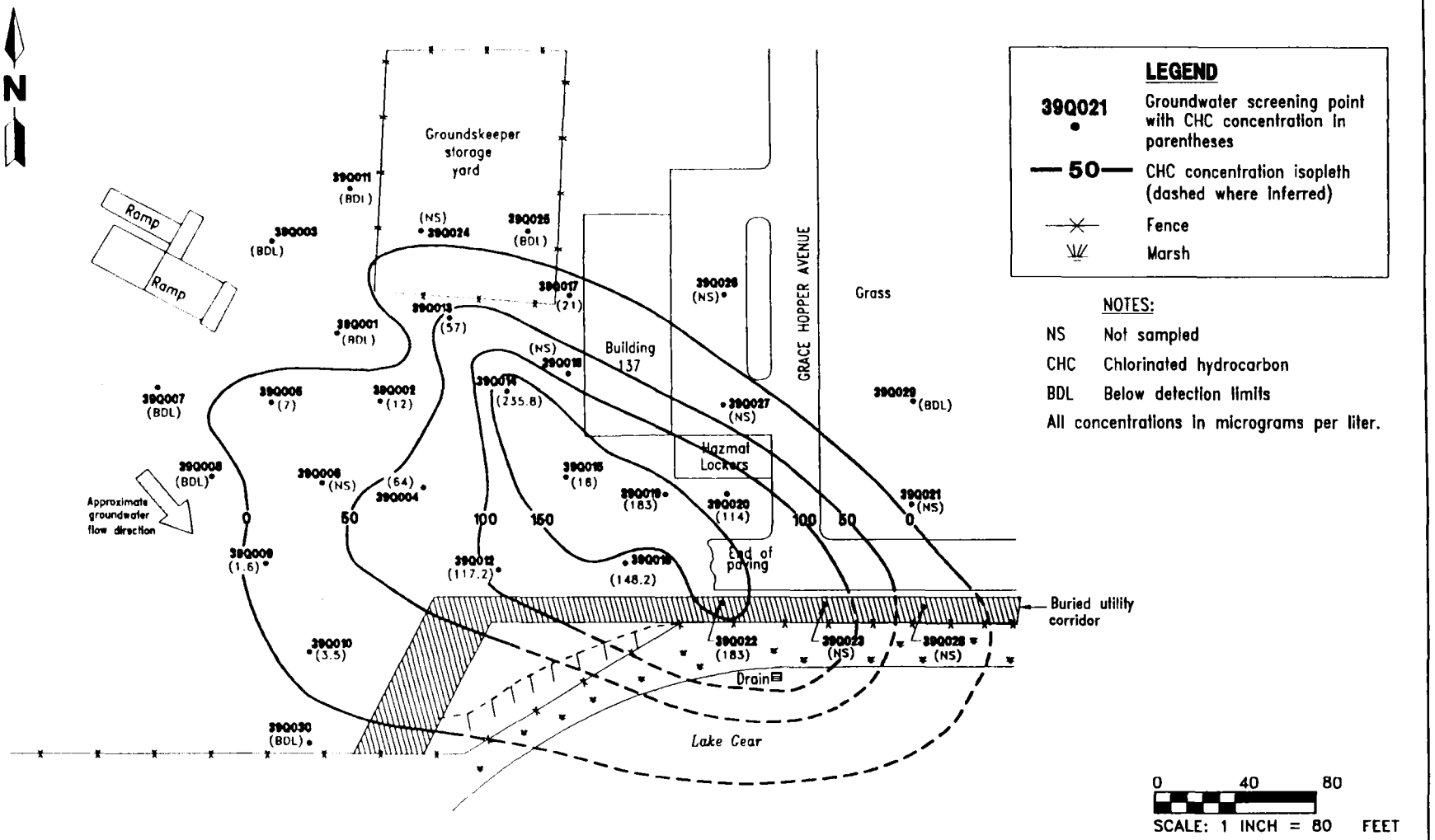

LEGEND

39Q021 ●	Groundwater screening point with CHC concentration in parentheses
—50—	CHC concentration isopleth (dashed where inferred)
—✕—	Fence
ψψψ	Marsh

NOTES:

NS Not sampled
CHC Chlorinated hydrocarbon
BDL Below detection limits
All concentrations in micrograms per liter.

FIGURE 4-5
TOTAL CHLORINATED HYDROCARBON CONCENTRATIONS AT 28 TO 30 FEET BELOW LAND SURFACE

H:\OLD\SA39\ AND T\8519-38\TM-SA39 KHM NP-PDP 9-5-97

BASE REALIGNMENT AND CLOSURE ENVIRONMENTAL SITE SCREENING REPORT, STUDY AREA 39

NAVAL TRAINING CENTER ORLANDO, FLORIDA

limits of the plume. Samples collected from the 28- to 30-foot bls interval at the three screening points placed near the southern property line (39Q012, 39Q016, and 39Q022) all had PCE concentrations exceeding regulatory criteria (116 $\mu g/\ell$, 146 $\mu g/\ell$, and 183 $\mu g/\ell$, respectively).

The 35- to 37-foot interval is immediately below the clay layer (Figure 4-6). At that interval, the PCE plume is limited to the southeast corner of the site, below the area where the clay layer has higher sand content. The samples collected at screening points 39Q016, 39Q019, 39Q020, and 39Q022 were the only points with PCE detections. The PCE concentrations measured at those locations were 18 $\mu g/\ell$, 6.2 $\mu g/\ell$, 22 $\mu g/\ell$, and 22 $\mu g/\ell$, respectively. Samples were not collected deeper than 25 feet bls east of screening point 39Q022 because of refusal caused by the hardpan. Data gaps exist along the east and south sides of the plume at this interval and deeper.

Below 37 feet bls, the only PCE detections were at screening points 39Q020 and 39Q022. At 39Q020, the PCE concentration detected at 40 to 41 feet was 228 $\mu g/\ell$.

At 39Q022, the highest PCE concentration detected below 37 feet was at the 50- to 51-foot interval (46 $\mu g/\ell$). No PCE was detected at 39Q022 at 70 to 71 feet bls.

Figure 4-7 presents a cross-section profile drawn through the long axis of the PCE plume along a line oriented parallel to groundwater flow. The cross section was constructed using results of the CPT survey and the onsite analytical data collected at screening points 39Q003, 39Q001, 39Q002, 39Q004, and 39Q022. As can be seen, the only affected groundwater at the water table was at screening point 39Q001. Downgradient from that point, the highest PCE concentrations were located along the upper surface of the sandy clay layer. PCE was not detected beneath the clay in the upgradient portion of the plume. In the downgradient portion of the plume where the clay thins and is coarser grained, the plume has apparently migrated through the clay in the vicinity of screening point 39Q022. The PCE plume extends to a depth of at least 60 feet bls at that location.

Twelve of the screening samples were submitted to an off-site laboratory for confirmation of the field screening results. Results from the off-site groundwater confirmation samples are provided in Appendices E (Summary of Detections) and F (Summary of Analytical Results). Results compare reasonable well, especially in samples with higher PCE concentrations. For example, in samples 39Q01404 and 39Q02006 where field screening results indicated PCE concentrations ranging from 228 to 243 $\mu g/\ell$, the off-site laboratory reported values for both samples of 260 $\mu g/\ell$. At lower concentrations of PCE, the off-site laboratory reported PCE concentrations ranging from 7 to 50 percent of the onsite field laboratory values.

Soil Screening. There were no detections of the PCE in the soil samples analyzed onsite with the field laboratory or in the confirmation samples analyzed off-site. The onsite laboratory soil analytical screening results are presented in Appendix I. The off-site confirmation analytical results are provided in Appendices E (Summary of Detections) and F (Summary of Analytical Results).

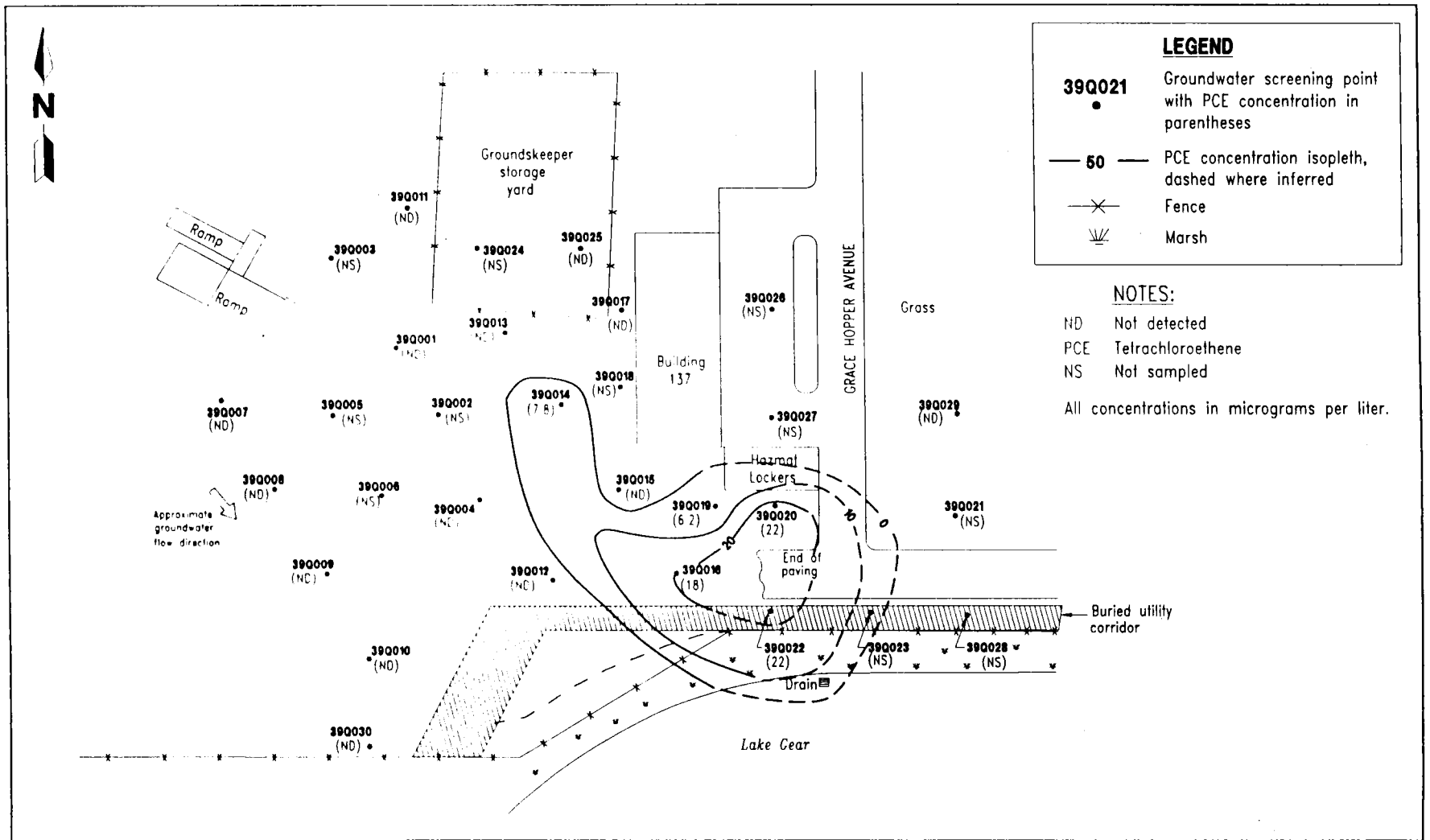

FIGURE 4-6
PCE CONCENTRATIONS AT 35 TO 37 FEET BELOW LAND SURFACE

BASE REALIGNMENT AND CLOSURE ENVIRONMENTAL SITE SCREENING REPORT, STUDY AREA 39

NAVAL TRAINING CENTER ORLANDO, FLORIDA

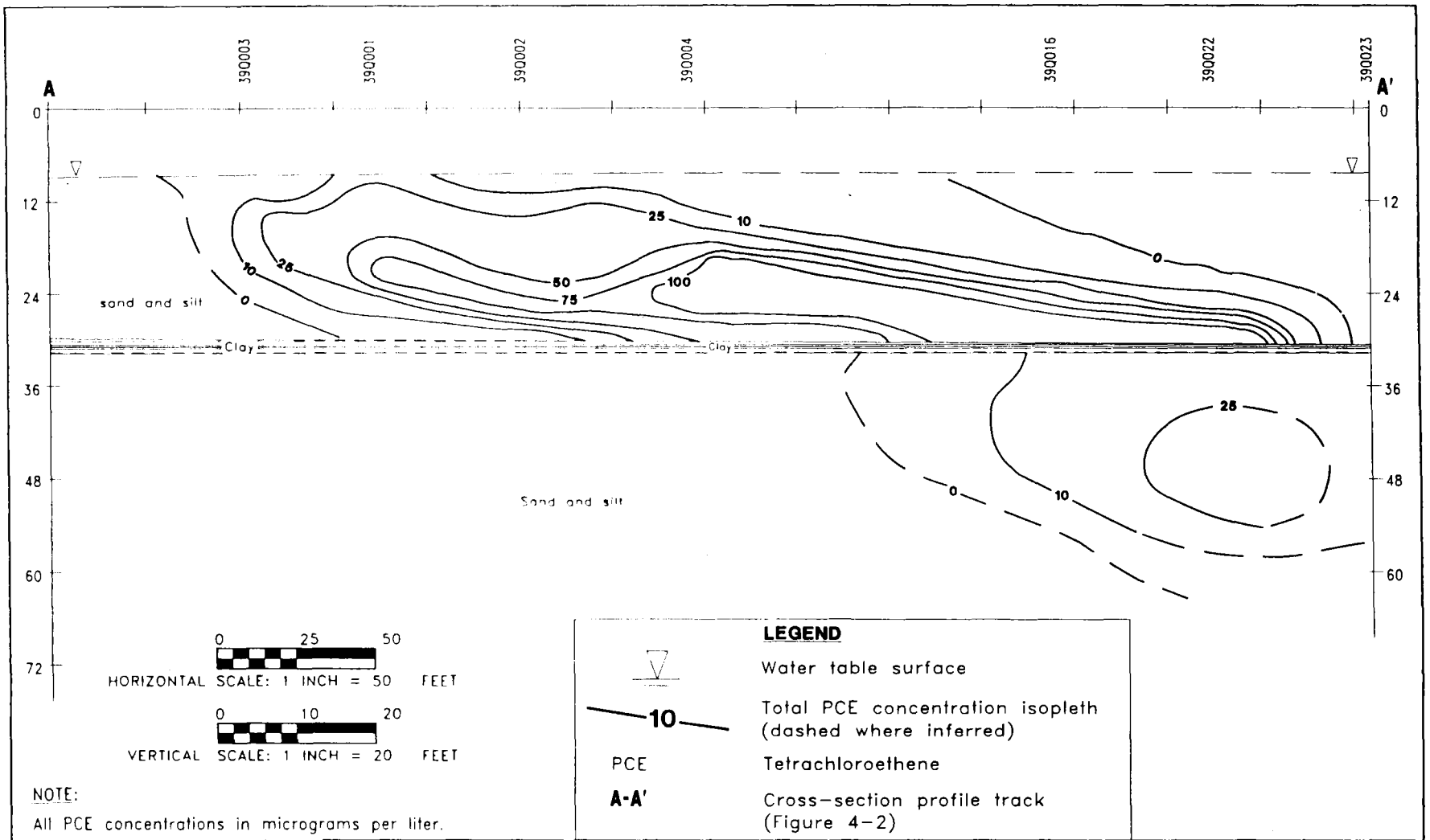

NOTE:
All PCE concentrations in micrograms per liter.

FIGURE 4-7
PCE CONCENTRATION AND LITHOLOGIC CROSS SECTION A-A'

BASE REALIGNMENT AND CLOSURE ENVIRONMENTAL SITE SCREENING REPORT, STUDY AREA 39

NAVAL TRAINING CENTER ORLANDO, FLORIDA

H:\OLD\SA39\S39-XSEC.PDP-NAB 9-26-97

4.2.2 Confirmation While the first objective for the second phase of this investigation was to map the PCE plume using DPT to screen a large number of groundwater samples, a second objective was to confirm those screening results. Accordingly, 15 new monitoring wells were installed during the investigation and were incorporated with 3 existing wells from earlier studies to form a network of 6 well clusters. Each cluster included a shallow well screened to bracket the water table, an intermediate well screened immediately above the shallow clay, and a deep well screened below the shallow clay. At each cluster the shallow well was placed upgradient of the intermediate and deep wells. The shallow wells were given an "A" designation, the intermediate wells a "B" designation, and the deep wells a "C" designation. The rationale and details of the monitoring well program are described below.

4.2.2.1 Monitoring Well Placement and Construction New monitoring wells OLD-39-12A, OLD-39-13B, and OLD-39-14C comprise a well cluster located approximately 50 feet upgradient from screening point 39Q003 (Figure 4-8). This cluster was placed upgradient of the trailing edge of the plume.

New monitoring well OLD-39-26C was combined with existing wells OLD-39-03A and OLD-39-07B to form a cluster located in the area with the highest PCE concentrations near the water table.

New wells OLD-39-15B and OLD-39-16C were combined with existing shallow well OLD-39-04A to form a cluster designed to verify the eastern limits of the plume.

New monitoring wells OLD-39-23A, OLD-39-24B, and OLD-39-25C were located at screening point 39Q030 and were designed to verify the western limits of the plume.

New wells OLD-39-20A, OLD-39-21B, and OLD-39-22C were designed to verify the highest PCE concentrations detected along the upper surface of the shallow clay and to verify the lateral limits of the plume at the water table. These wells were intended to be located approximately 30 feet northwest, but surface and subsurface obstructions forced the move to their eventual location.

The last cluster included new wells OLD-39-17A, OLD-39-18B, and OLD-39-19C. This cluster was placed at screening point 39Q022 and was designed to verify the highest PCE concentrations detected below the shallow clay layer during screening. The shallow well would also serve to verify the general location of the leading edge of the plume.

All of the shallow and intermediate wells were installed using 6-1/4-inch inside diameter hollow stem augers. The wells are constructed of 2-inch, Schedule 40, flush-jointed, threaded, PVC screen and riser. The wells are constructed with 0.010-inch screen. The shallow wells were constructed with 10 feet of screen, and the intermediate wells were constructed with 5 feet of screen.

The deep monitoring wells were constructed with an outer 6-inch-diameter PVC surface casing set into the shallow clay layer to minimize the potential for cross contamination during well construction. The construction details for all monitoring wells installed at SA 39 are presented in Appendix A, Table A-1.

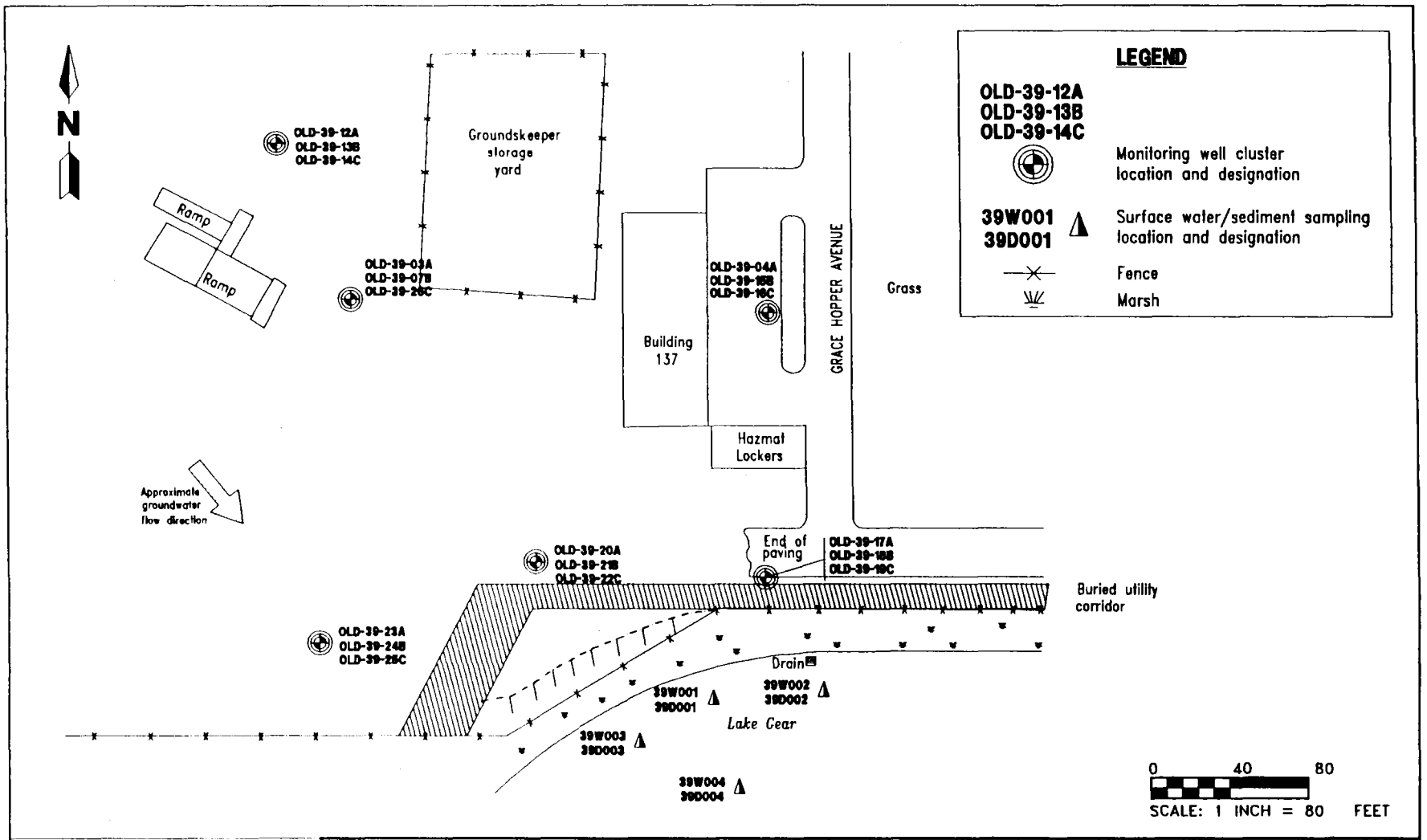

FIGURE 4-8
GROUNDWATER, SURFACE WATER, AND SEDIMENT SAMPLING LOCATIONS

BASE REALIGNMENT AND CLOSURE
ENVIRONMENTAL SITE SCREENING REPORT, STUDY AREA 39

NAVAL TRAINING CENTER
ORLANDO, FLORIDA

H:\OLD\SA39\ AND T:\8519-38\TM-SA39 10-94-MP-PDP 9-5-97

The newly installed monitoring wells were developed to ensure proper setup of the filter pack. This was accomplished by pumping water from the well at varying rates to remove fine soil particles and to improve hydraulic connection with the surrounding aquifer. A minimum of three well volumes was purged from the wells,and purging continued until the turbidity was reduced as much as possible and the field measurements of turbidity, pH, temperature, and conductivity had stabilized.

Standard penetration testing (SPT) was performed at each monitoring well cluster to aid in the well design. Samples were collected continuously from the surface to the base of the surficial aquifer using a 2-foot-long, 1-1/2-diameter split-spoon sampler. Samples were classified using the USCS and screened with an FID. SPT results were combined with results of the CPT survey to construct a lithologic profile of the site.

4.2.2.2 **Groundwater Sampling** A groundwater sample was collected from each of 18 monitoring wells in 6 well clusters. Prior to sample collection, the wells were purged to ensure that groundwater representative of the surrounding aquifer was present in the well. The wells were purged using the low-flow method to minimize volatilization. A minimum of three well volumes was purged, and purging continued until the turbidity was reduced as much as possible and the field measurements of turbidity, pH, temperature, and conductivity stabilized. The collected samples were submitted to an off-site laboratory and analyzed for the presence of VOCs using USEPA Method 524.2.

Sampling for natural attenuation parameters was incorporated into the groundwater sampling program to provide a screening level assessment of natural attenuation as a remedial option for the chlorinated solvent contamination in the groundwater at SA 39. USEPA, Region IV (USEPA, 1997) recognizes that natural attenuation processes due to advection, adsorption, biological degradation, dispersion, and volatilization can effectively reduce contaminants to levels that are protective of human health and environment.

All of the 18 monitoring wells were sampled for most of the parameters listed in the draft Region IV guidance document, utilizing both field and laboratory methods. Field kits (obtained from the Hach Company) were utilized to measure total alkalinity, carbon dioxide, chloride, dissolved iron, dissolved iron (II), dissolved oxygen, and hydrogen sulfide. Oxidation-reduction potential, temperature, and pH were measured using field-based instruments. Groundwater samples were sent to an off-site laboratory for analysis of VOCs, ethane, ethene, methane, nitrate, nitrite, sulfate, sulfide, and total organic carbon.

Field data sheets associated with monitoring well installation and sampling during the Phase II supplemental work, including the soil boring logs, well construction diagrams, and the groundwater sampling data sheets, are provided in Appendix A.

4.2.2.3 **Surface Water and Sediment Sampling** Surface water and sediment samples were collected from four locations in Lake Gear (Figure 4-8) to evaluate the presence of PCE. Three surface water samples (38W001 through 39W003) were collected along the shoreline of Lake Gear where the water depth was 3 feet, whereas sample 39W004 was collected in approximately 10 feet of water. Surface water samples were collected at the midpoint between the water surface and the lake bottom. Prior to sample collection, the temperature, conductivity, pH, and

turbidity of the water were measured and recorded. Sediment samples (39D001 to 004) were collected with stainless steel hand augers. Surface water and sediment samples were submitted to an off-site laboratory for analysis of VOCs as with groundwater and soil by USEPA Methods 524.2 and 8010, respectively.

4.2.2.4 **Hydraulic Conductivity Testing** *In situ* hydraulic conductivity tests were performed on selected monitoring wells installed during this investigation. Tests were performed at one shallow well (OLD-39-23A), two intermediate wells (OLD-39-21B and OLD-39-24B), and three deep wells (OLD-39-16C, OLD-39-22C, and OLD-39-25C). Additional shallow wells would have been tested, but the water table was near the lowest point in the yearly cycle, and, consequently, the water level was not high enough in other shallow wells to properly conduct the tests.

Before each test, a static water-level measurement was recorded after the well had equilibrated. A pressure transducer rated at 10 pounds per square inch was placed in the monitoring well to measure changes in water level during the test. The slug was then lowered into the well. After equilibrium was reached, the slug was removed swiftly from the well, and the rising head portion of the test was begun. The well was allowed to recover to 90 percent of static water level before the test was stopped.

Data were processed in the Aqtesolv® software program using the method of Bouwer and Rice (1976). For the well where the top of the screen was above the water table, the plot was analyzed using the double straight line method (Bouwer, 1989) to account for filter pack drainage.

4.2.2.5 **Results** The results of the supplemental groundwater screening investigation are presented below.

<u>Groundwater Off-site Laboratory Analytical Results</u>. Groundwater analytical results from the monitoring well program confirm the nature and extent of the PCE plume, as described above in Paragraph 4.2.1.4. PCE detections were noted at concentrations in excess of screening criteria at 8 of the 18 monitoring well locations.

Samples collected from the upgradient monitoring well cluster (OLD-39-12A, OLD-39-13B, and OLD-39-14C) showed no PCE detections (Figure 4-9). At the cluster located in the middle of the PCE plume, PCE was detected in shallow monitoring well OLD-39-03A at a concentration of 8.6 $\mu g/\ell$, while intermediate well OLD-39-03B had PCE at a concentration of 11 $\mu g/\ell$ and TCE at a concentration of 0.23 J (estimated) $\mu g/\ell$. There were no detections of VOCs in deep monitoring well OLD-39-26C.

Samples collected from the cluster installed to confirm the western limits of the plume (OLD-39-23A, OLD-39-24B, and OLD-39-25C) had no detections. Samples collected from the well cluster along the east side of the plume (OLD-39-04A, OLD-39-15B, and OLD-39-16C) showed no detections in the shallow well, but did have concentrations of volatiles in the intermediate and deep wells. PCE and TCE were detected in intermediate well (OLD-39-15B) at concentrations of 1.6 $\mu g/\ell$ and 0.21 $\mu g/\ell$, respectively. PCE and TCE were detected in deep well OLD-39-16C at concentrations of 12 $\mu g/\ell$ and 0.65 $\mu g/\ell$, respectively. The only detections in samples collected from the cluster installed along the southern boundary of the

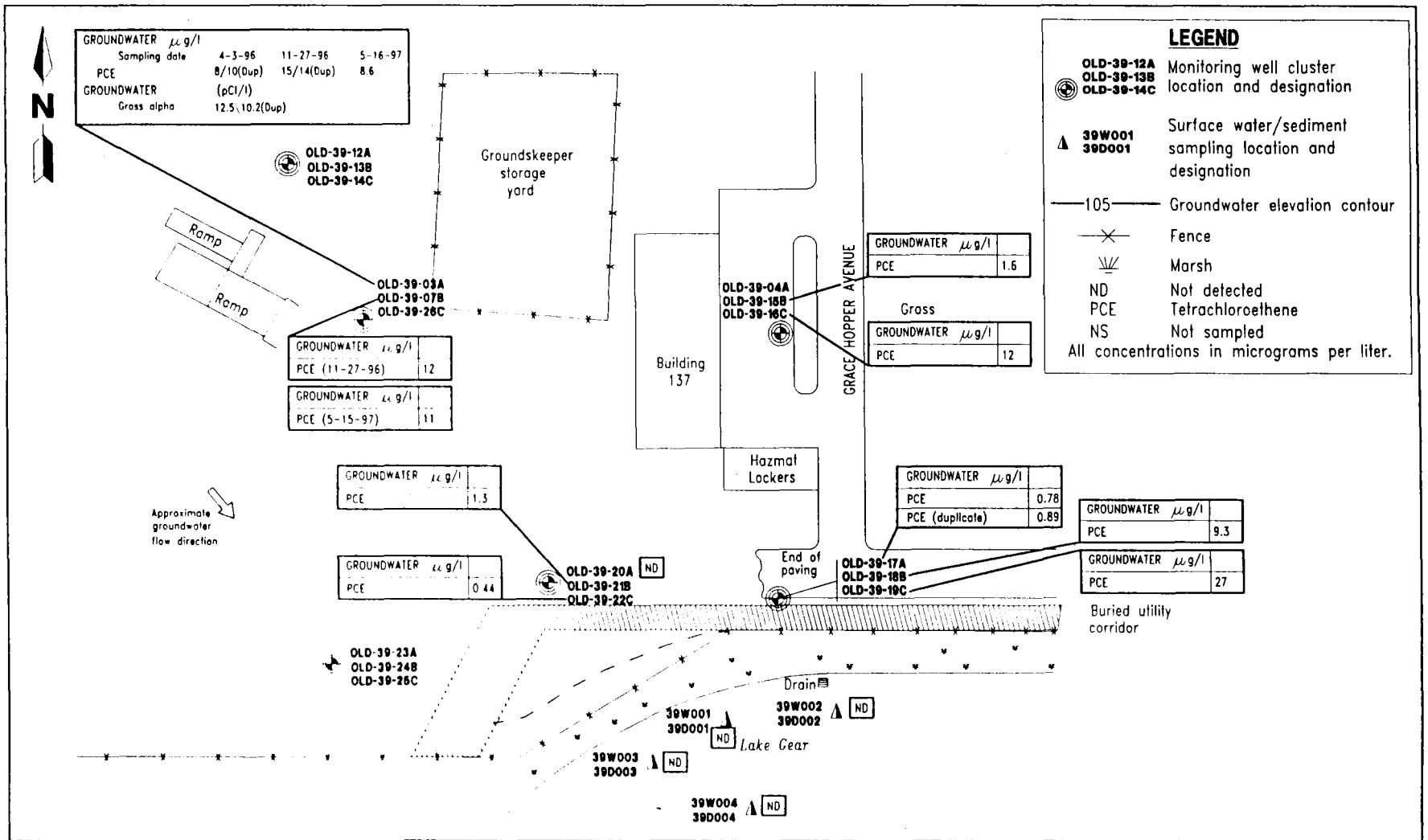

FIGURE 4-9
PCE CONCENTRATIONS AT 35 TO 37 FEET BELOW LAND SURFACE

BASE REALIGNMENT AND CLOSURE ENVIRONMENTAL SITE SCREENING REPORT, STUDY AREA 39

NAVAL TRAINING CENTER ORLANDO, FLORIDA

plume (OLD-39-20A, OLD-39-21B, and OLD-39-22C) were in the intermediate well where PCE and TCE were detected at concentrations of 1.3 $\mu g/\ell$ and 0.44 $\mu g/\ell$, respectively.

At the cluster installed in the area where the screening data had the highest PCE concentrations beneath the shallow clay, the sample collected from the shallow well (OLD-39-17A) had a PCE concentration of 2 $\mu g/\ell$. The sample collected from the intermediate well (OLD-39-18B) had PCE and TCE concentrations of 9.3 $\mu g/\ell$ and 0.47 $\mu g/\ell$, respectively. The sample collected from the deep well (OLD-39-19C) had PCE and TCE concentrations of 27 $\mu g/\ell$ and 0.64 $\mu g/\ell$, respectively. This sample also contained several other VOCs at concentrations below screening criteria, including 1,2,4-trimethylbenzene at 1.9 $\mu g/\ell$ and 1,3,5-trimethylbenzene at 1.9 $\mu g/\ell$.

The groundwater analytical results from the Phase II investigation are provided in Appendices E (Summary of Detections) and F (Summary of Analytical Results).

Where comparative data exist, the DPT sampling results (field laboratory) compare favorably with the analytical data from monitoring wells (off-site CLP laboratory) (Table 4-1). There are 16 samples from which one may draw a direct comparison; i.e., samples were obtained from a similar depth interval and were collocated within 15 feet of each other. Nine of the 16 sample pairs reported nondetections or trace concentrations of PCE. Two monitoring wells (OLD-39-18B and -19C) had PCE concentrations of 9.3 and 27 $\mu g/\ell$, versus field laboratory concentrations of 11 and 26 $\mu g/\ell$ in DPT samples 39Q02203 and 39Q02207, respectively. In addition, monitoring well OLD-39-03A had a PCE concentration of 8.6 $\mu g/\ell$, versus a concentration of 38 $\mu g/\ell$ in DPT sample 39Q00101. There were also two samples with poor correlation: well OLD-39-07B reported a PCE concentration of 11 $\mu g/\ell$, versus a nondetection of PCE in DPT sample 39Q00104, and well OLD-39-21B reported a PCE concentration of 1.3 $\mu g/\ell$ versus 66 $\mu g/\ell$ of PCE in DPT sample 39Q01203.

The differences in PCE concentrations measured in samples collected with DPT and monitoring wells screened at comparable intervals are probably attributable to the differences in the length of the sampling interval: the DPT samples were collected from a 1-foot-thick interval whereas monitoring well samples were obtained from a screened interval of either 5 or 10 feet. In this study, the correlation is sufficient to conclude that the analytical results support the plume geometry depicted on Figures 4-4 through 4-7. As with any sampling program, data gaps exist with the monitoring well results because of the limited number of monitoring wells installed.

<u>Soil Onsite Field Screening and Off-Site Laboratory Analysis</u>. Surface and subsurface samples were located above the highest PCE concentrations at the water table surface. Ten soil borings were hand-augered at these locations, and samples were collected representing each 2-foot interval between the surface and the water table. All samples were analyzed for VOCs with an onsite GC, and 20 percent of the samples were sent off-site for confirmation. There were no detections of PCE in surface or subsurface soil samples for either onsite or off-site laboratory analysis.

<u>Natural Attenuation Sampling and Analysis</u>. Analytical results for the various natural attenuation parameters are presented in Appendix J, Table J-1. Preliminary screening scores were calculated using a point system presented in

Table 4-1
Comparison of Groundwater Analytical Results
DPT (Onsite Field Laboratory) versus Monitoring Well
(Off-Site CLP Laboratory)

Base Realignment and Closure
Environmental Site Screening Report
Study Area 39
Naval Training Center
Orlando, Florida

Monitoring Well ID	Screened Interval (ft bls)	PCE Concentration (µg/ℓ) (CLP laboratory)	Nearest DPT Screening Point[1]	DPT Sampling Interval[2] (ft bls)	PCE Concentration (µg/ℓ) (field laboratory)
OLD-39-03A	6 to 16	8.6	39Q00101	15 to 17	38.0
OLD-39-07B	27 to 32	11	39Q00104	30 to 32	<2
OLD-39-26C	35 to 40	<0.5	39Q00105	36 to 37	<2
OLD-39-12A	6 to 16	<0.5	39Q00301	20 to 22	2.0
OLD-39-13B	23 to 28	<0.5	39Q00302	25 to 27	<2
OLD-39-14C	35 to 40	<0.5	NA[3]	--	-
OLD-39-04A	5 to 15	<0.5	39Q02701	15 to 16	<2
OLD-39-15B	19 to 24	1.6	39Q02702	20 to 21	4.2
OLD-39-16C	35 to 40	12	NA[3]	--	-
OLD-39-17A	6 to 16	0.78/0.89 (Dup)	39Q02201	15 to 16	<2
OLD-39-18B	23 to 28	9.3	39Q02203	25 to 26	11
OLD-39-19C	45 to 50	27	39Q02207	45 to 46	26
OLD-39-20A	6 to 16	<0.5	39Q01201	15 to 16	<2
OLD-39-21B	23 to 28	1.3	39Q01203	25 to 26	66
OLD-39-22C	35 to 40	0.44J/0.46J (Dup)	39Q01205	35 to 36	<2
OLD-39-23A	6 to 16	<0.5	39Q03001	15 to 16	<2
OLD-39-24B	23 to 28	<0.5	39Q03003	25 to 26	<2
OLD-39-25C	35 to 40	<0.5	39Q03005	35 to 36	<2

[1] Monitoring well clusters were installed within 5 feet of the screening point listed except for the OLD-39-20A/OLD-39-21B/OLD-39-22C and OLD-39-23A/OLD-39-24B/OLD-39-25C clusters, which were placed approximately 15 feet from the nearest screening point.
[2] DPT sampling interval shown is that interval which best corresponds to the screened interval of the cited monitoring well. In each instance the DPT sampling interval is situated within the screen's depth interval.
[3] NA indicates that there was no DPT sampling interval which corresponded with the monitoring well's screened interval.

Notes: DPT = direct-push technology.
CLP = Contract Laboratory program.
ID = identifier.
ft bls = feet below land surface.
PCE = tetrachloroethene
µg/ℓ = micrograms per liter
< = less than.
NA = not applicable.
-- = not available.
Dup = Duplicate sample.
J = estimated value.

the Draft Region IV Approach to Natural Attenuation of Chlorinated Solvents (USEPA, 1997) and are presented in Table J-2 (Appendix J).

Existing data appear to show that natural attenuation resulting from biological degradation is currently not a significant factor for this site, with screening scores for all wells ranging from 4 to 14 (versus a USEPA guidance value of 20 or greater), indicating inadequate to limited evidence that biological degradation is occurring. Limited biodegradation of PCE is further evidenced by the absence of degradation products (e.g., TCE, cis-DCE, and vinyl chloride) in any of the wells sampled. Total organic carbon in the groundwater appears to be a major limiting factor with low concentrations ranging from 1 to 20 milligrams per liter. Both the dissolved oxygen and the oxidation-reduction potential measurements show that the groundwater is currently aerobic, indicating that reductive dechlorination of PCE is limited.

Surface Water and Sediment Analytical Results. Samples collected at surface water and sediment locations in Lake Gear had no PCE detections (Figure 4-9). These results are consistent with the analytical results of shallow monitoring well samples collected from the three monitoring well clusters along the northern shoreline of Lake Gear. However, samples collected from the intermediate well OLD-39-18B and the deep well OLD-39-19C reported PCE concentrations of 9.3 and 27 $\mu g/\ell$.

The surface water and sediment analytical results from the Phase II investigation are provided in Appendix F (Summary of Analytical Results).

Groundwater Flow Rate and Plume Migration. Data collected from the monitoring well network were utilized to determine the groundwater flow rate within the surficial aquifer in the area of the PCE plume. These data included results from hydraulic conductivity testing (discussed in Paragraph 4.2.2.4, above) and water-level elevations at each well. The water-level data (Appendix A, Table A-2) were used to calculate the horizontal gradient of the water table and the vertical potential (Appendix A, Table A-3) between the shallow and deeper portions of the surficial aquifer. The water-level data collected on July 25, 1997, are presented on Figures 4-10 through 4-12 as groundwater elevation contours for the shallow (i.e., water table), intermediate (up to 19 to 30 feet bls), and deep (35 to 50 feet bls) portions of the surficial aquifer, respectively. The horizontal gradient was then combined with the conductivity results to calculate the average linear velocity (or seepage velocity) using the following formula:

$$V = Ki/p \qquad (1)$$

where: V = groundwater flow velocity (feet per day),
K = hydraulic conductivity (feet per day),
i = hydraulic gradient (feet per foot), and
p = effective porosity (unitless, assumed at 0.30).

Hydraulic conductivity values ranging from 2.3 feet per day to 5.8 feet per day were calculated based on the slug test results (Appendix K). An average conductivity value of 4.1 feet per day was determined for six wells tested. The average value was combined with the measured water table gradient (0.0025 foot per foot, or 0.25 foot per 100 feet) to calculate groundwater flow rates across

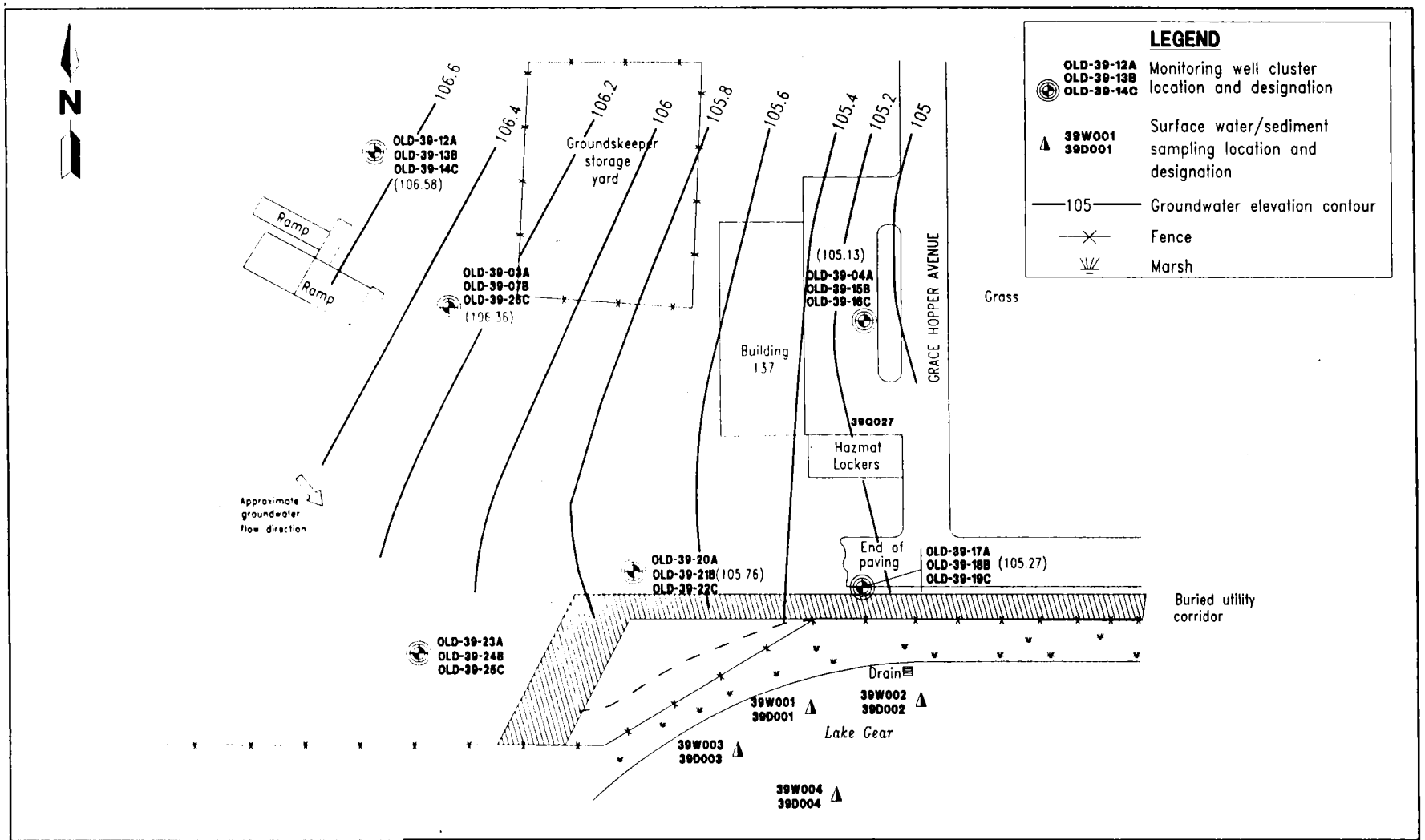

0 40 80
SCALE: 1 INCH = 80 FEET

H:\OLD\SA39\FIG4-10.DWG, PDP-NAB 09-26-97 13:24:38 AutoCAD R13

FIGURE 4-10
GROUNDWATER ELEVATION CONTOURS
SHALLOW PORTION OF SURFICIAL AQUIFER
JULY 25, 1997

BASE REALIGNMENT AND CLOSURE ENVIRONMENTAL SITE SCREENING REPORT, STUDY AREA 39

NAVAL TRAINING CENTER ORLANDO, FLORIDA

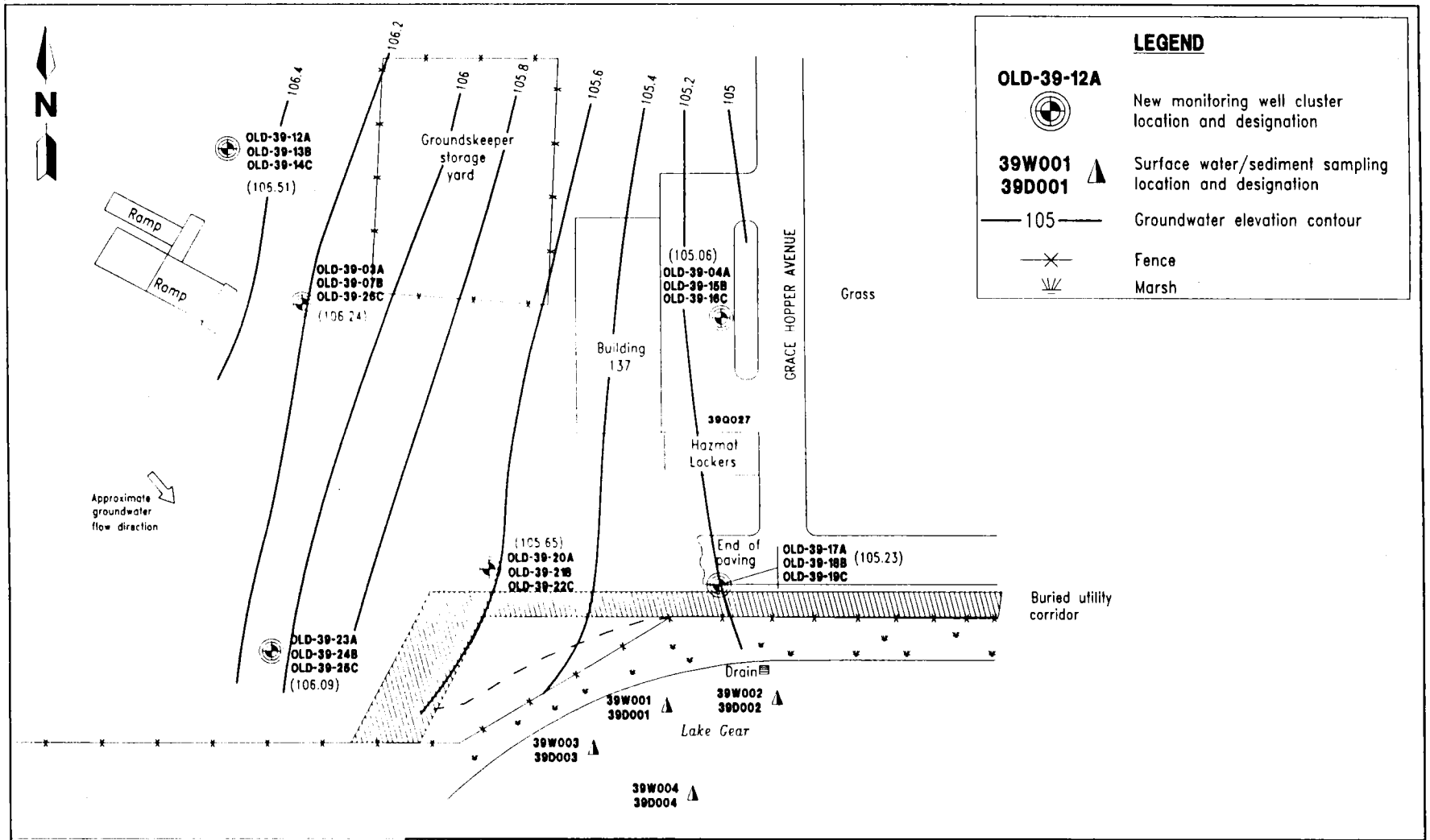

0 25 50
SCALE: 1 INCH = 50 FEET

H:\OLD\SA39\FIG4-11.DWG, PDP-NAB 09/26/97 15:38:00, AutoCAD R12

FIGURE 4-11
GROUNDWATER ELEVATION CONTOURS
INTERMEDIATE PORTION OF SURFICIAL AQUIFER
JULY 25, 1997

BASE REALIGNMENT AND CLOSURE ENVIRONMENTAL SITE SCREENING REPORT, STUDY AREA 39

NAVAL TRAINING CENTER ORLANDO, FLORIDA

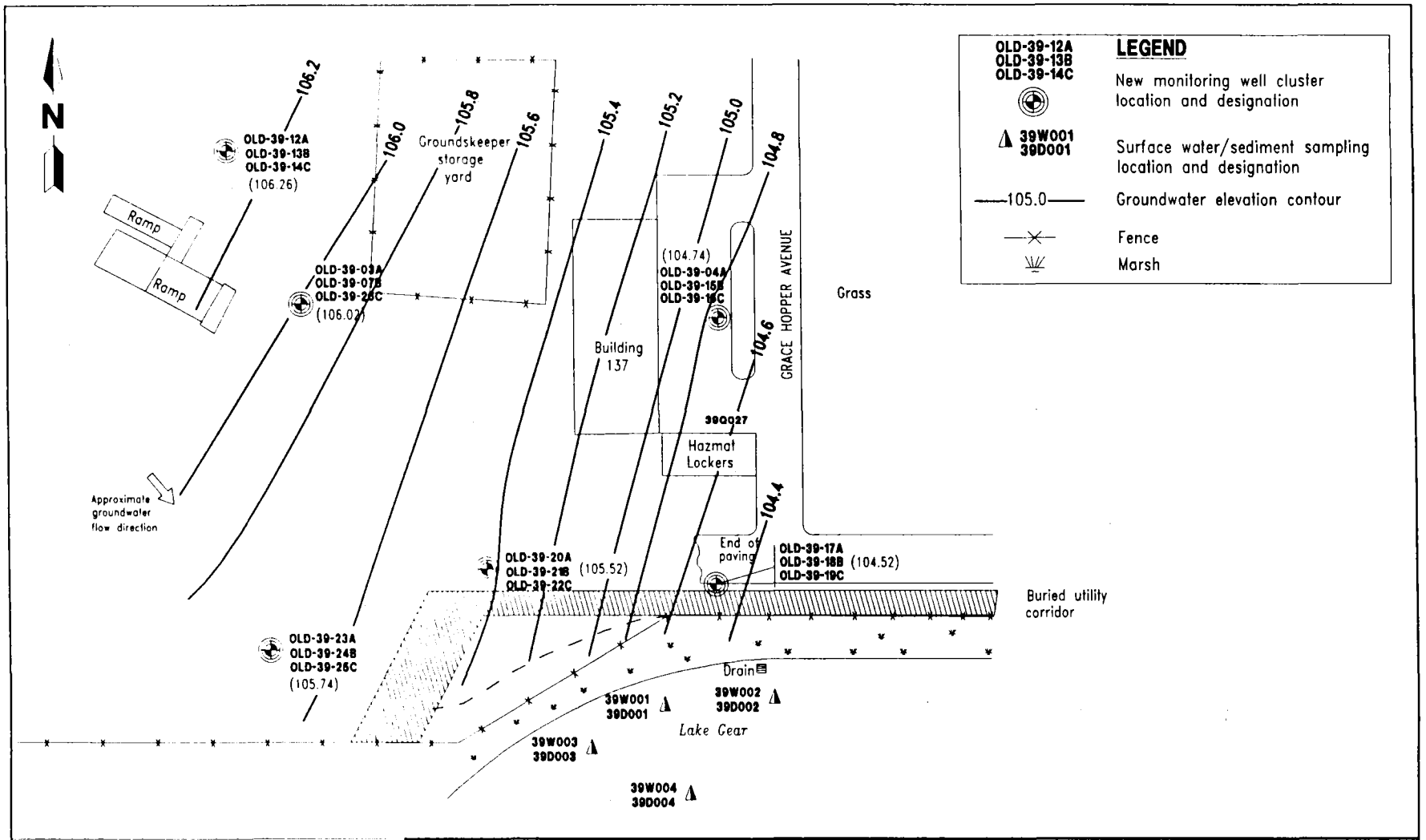

0 25 50
SCALE: 1 INCH = 50 FEET

H:\OLD\S439\FIG4-12.DWG, PDP-NAR 09/26/97

FIGURE 4-12
GROUNDWATER ELEVATION CONTOURS
DEEP PORTION OF SURFICIAL AQUIFER
JULY 25, 1997

BASE REALIGNMENT AND CLOSURE ENVIRONMENTAL SITE SCREENING REPORT, STUDY AREA 39

NAVAL TRAINING CENTER ORLANDO, FLORIDA

the site. Velocities ranging from 0.019 foot per day to 0.048 foot per day were calculated for the six wells tested with an overall site average of 0.034 foot per day. This translates into an average linear velocity of approximately 12 to 13 feet per year.

Given the measured thickness of the surficial aquifer of approximately 80 feet as determined from the CPT survey results, a transmissivity value of 330 square feet per day was calculated. The permeability test semilog plots are provided in Appendix K.

If one combines the measured groundwater flow characteristics with the current configuration of the PCE plume, it is possible to deduce the general migration history for the plume. Since the area around monitoring well cluster OLD-39-03A/OLD-39-07B/OLD-39-26C was the area with the highest VOC concentrations at the water table surface, it is assumed to be the source area. This assumption is supported by the passive soil gas results during the initial phase of screening. The absence of any detections in the soil samples collected in this area suggests that the source(s), if still present, is of limited extent. However, the source may be continuing to produce vapors in the soil, as evidenced by the soil gas results, and may contribute to the groundwater plume through rainwater infiltration.

Another possible scenario is that the original source is no longer present due to dissolution and volatilization. PCE may have partitioned out of groundwater and onto organic carbon in saturated soil when groundwater concentrations were higher. At present, these VOCs may be slowly dissolving back into groundwater.

Another alternative is that the source is gone and all that remains of the plume is the low parts per billion PCE contamination defined by the monitoring well clusters.

If one assumes a source location as described above and an annual average horizontal groundwater flow rate of 12.4 feet, then the initial release of contaminants would most probably have occurred on the order of 20 years ago. This calculation does not take retardation into account, which could slow the flow rate by a factor of two or more. The contaminants would have migrated downward through the vadose zone and shallow portion of the aquifer, aided by slightly downward vertical potential until encountering the shallow sandy clay layer. Aided by the morphology and orientation of the upper surface of the clay unit and the direction of groundwater flow, the PCE plume migrated along the surface of the clay until it reached the area where the percentage of sand in the unit increases (in the vicinity of screening points 39Q020 and 39Q022). At that point, the contaminant plume would be permitted to migrate deeper, again along slightly downward vertical flow potential.

5.0 STUDY AREA 39, CONCLUSIONS AND RECOMMENDATIONS

5.1 CONCLUSIONS. The soil and groundwater at SA 39 have been variably impacted by previous activities at the site. A summary by medium is presented below.

5.1.1 Soil The screening investigation results indicate that PAHs are present in the surface soil at concentrations greater than 1,000 μg/kg. Arsenic was also detected at concentrations exceeding its residential screening value. The results of the FRA conducted for this medium demonstrated that the potential future RME for residents exposed to surface soils at SAs 39 (and 40) were at a risk level of 1×10^{-5}, which slightly exceeds the cancer risk target established by the State of Florida, but which is within the target risk range established by the USEPA. The FRA also concluded that the potential future average residential risk posed by exposure to surface soil was at an acceptable cancer risk level of 1×10^{-6}.

The cancer risk range, 1×10^{-5} to 1×10^{-6}, presented by these scenarios presents information for the risk manager to use as perspective into the risks presented by the site as a whole. The risk manager should consider the risk reduction achieved by cleanup of arsenic and/or PAHs in surface soil. The reduction of arsenic to the RGO or the established NTC, Orlando background screening concentration of 1 mg/kg would result in a RME residential risk of 2.5×10^{-6}. Furthermore, remediation of PAHs to the RGO or the residential Florida SCTL would result in a risk level of 1.6×10^{-6}. The combined cancer risk of these compounds following remediation to RGOs is 4.1×10^{-6}. Thus, a risk reduction from 1×10^{-5} to 4.1×10^{-6} achieved through remediation would result in associated remediation costs ranging from approximately $500,000 and $1.6 million (ABB-ES, 1997d).

There has been a recent change in the projected reuse of this parcel from mixed office and residential to nonresidential. Under a nonresidential reuse scenario, concentrations of arsenic and PAHs in surface soil meet screening criteria. However, institutional controls in the form of land use restrictions would be necessary to protect future users.

5.1.2 Groundwater The results of the supplemental groundwater screening investigation indicated that dissolved PCE is present within the surficial aquifer at concentrations that exceed State and Federal MCLs. The elliptically shaped plume currently occupies an area extending from the solid waste receptacle storage area to immediately north of Lake Gear. Contaminants in the upgradient part of the plume are concentrated along the upper surface of a sandy clay layer approximately 30 feet bls. Further downgradient, the clay is thinner and coarser grained, and the plume has migrated downward to a depth of up to approximately 60 feet bls. The plume is not well-defined in the downgradient portion due to the presence of a utility corridor near the northern shoreline of Lake Gear.

Although data are limited, the downward vertical potential suggests that dissolved PCE may be migrating to deeper portions of the surficial aquifer. Downward vertical potential should disappear and become upward in the vicinity of Lake Gear. Screening data from DPT indicate that the leading edge of the plume is currently within approximately 50 feet of the northern shoreline of Lake Gear, although surface water and sediment samples indicate that the plume has not reached Lake Gear at detectable concentrations. The absence of any appreciable PCE daughter products indicates that PCE is not degrading at a significant rate,

although other factors such as advection, adsorption, dispersion, and volatilization may be effective components of natural attenuation.

5.1.3 Site Conceptual Model The results of the supplemental groundwater screening investigation were used to develop a site conceptual model (SCM). The SCM is a framework within which the source area, release mechanism(s), and environmental pathways of potential concern are identified. The model is based upon our current understanding of the various environmental media and pathways. The model also serves as a framework for conceptualizing applicable remedial technologies and focusing activities toward an appropriate solution.

The source area is defined as the area where the release(s) of contaminants is suspected to have occurred. A contaminant release mechanism is a process that results in migration of a contaminant from a source area into the immediate environment, such as spills or leaks from a storage container. Once in the environment, contaminants can be transferred between media and transported away from the source and/or site.

The SCM developed for SA 39 is depicted on Figure 5-1. The source area is suspected to be the vicinity of the grounds maintenance storage yard and the waste receptacle loading ramps. The contaminant source release(s) mechanism is suspected to be occasional (or perhaps a single), low volume surface spills. The potential release pathway for contaminant migration is seepage into the subsurface through the soil and into the groundwater. Contaminants migrated along the pathway of groundwater flow, which is assumed to be primarily horizontal, until encountering a lens of sandy clay located at approximately 30 feet bls. Upon reaching the clay, the contaminants have migrated southeastward in the direction of groundwater flow toward Lake Gear. Near Lake Gear, the clay lens pinches out, thus allowing the contaminants to migrate downward to approximately 60 feet bls.

The downward component of vertical flow probably disappears and becomes slightly upward as groundwater approaches the northern shoreline of Lake Gear. The horizontal flow component is likely many times larger than any vertical (downward or upward) flow component. The only potential future exposure pathways of the chlorinated solvents are ingestion and inhalation of volatiles while showering.

5.2 RECOMMENDATIONS. The results of the screening investigation warrant a reclassification of SA 39 from 7/Gray to 6/Red. Recommendations for the surface soil and groundwater at SA 39 are listed in the subsections below.

5.2.1 Soil Because of the recent change in reuse for this parcel from mixed office and residential to nonresidential, HLA recommends no further action for this medium. However, HLA recommends that institutional controls restricting this parcel to nonresidential use be implemented prior to transfer. These recommendations are consistent with the findings of the FRA (ABB-ES, 1997e).

5.2.2 Groundwater Due to PCE concentrations in groundwater that exceed State and Federal MCLs, HLA recommends that a risk analysis for groundwater be completed that would include data from all wells in the vicinity of the PCE plume. At the same time, an evaluation of remedial options and a cost benefit analysis should be completed.

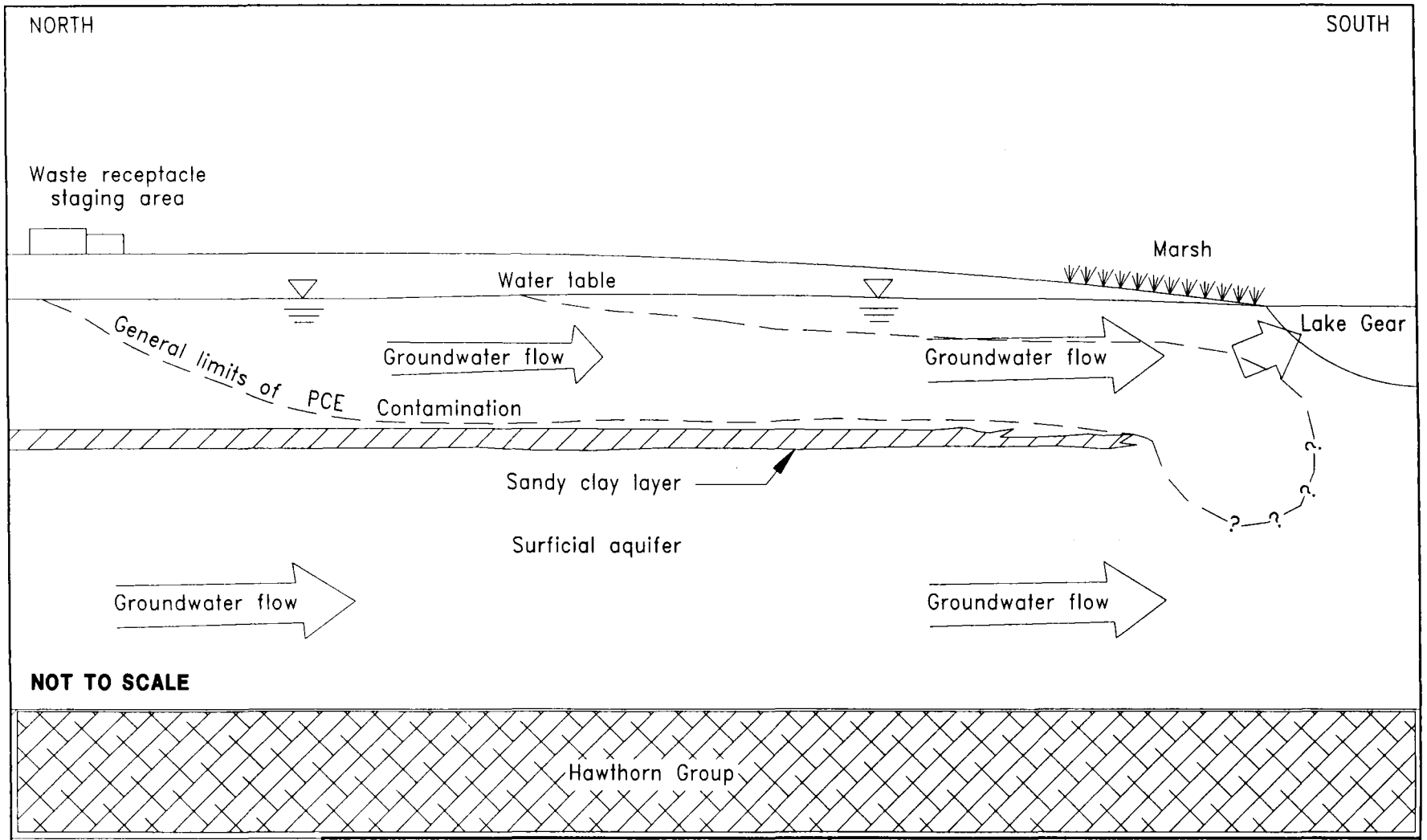

LEGEND

PCE = Tetrachloroethene

FIGURE 5-1
SITE CONCEPTUAL MODEL

BASE REALIGNMENT AND CLOSURE ENVIRONMENTAL SITE SCREENING REPORT, STUDY AREA 39

NAVAL TRAINING CENTER ORLANDO, FLORIDA

H:\OLD\SA39\8519F008.DWG, PDP-NAB 09/24/97 17:41:53, AutoCAD R12

Seven monitoring wells at SA 39 were destroyed by the City of Orlando during recent utility construction activities along the south property line of the Main Base. The location and identifier of the destroyed wells are shown in Figure 5-2. HLA recommends that these wells be abandoned in accordance with applicable regulatory guidelines (if they can be located) and replaced so that they may be utilized in the groundwater monitoring effort.

Given the configuration of the plume of contaminated groundwater, HLA also proposes that some of the wells be reinstalled at locations that would be more valuable for monitoring purposes. Monitoring well OLD-39-23A and the OLD-39-17A/OLD-39-18B/OLD-39-19C cluster can be installed at their original locations. The OLD-39-20A/OLD-39-21B/OLD-39-22C cluster, however, would better serve if moved to the open field immediately east of Grace Hopper Avenue and approximately 100 feet southeast of Building 137. The proposed replacement location of the monitoring wells is presented in Figure 5-2. Additionally, HLA would recommend that an intermediate-depth well be installed approximately 50 feet northwest of the southwest corner Building 137. This is the location of the highest PCE concentration (234 $\mu g/\ell$) detected in the intermediate depth range (28 to 30 feet bls) during the direct push technology screening investigation and would be valuable in monitoring any changes in the chemistry and movements of the contaminant plume. Following these activities, HLA also recommends that a quarterly groundwater monitoring program of selected wells be implemented. Quarterly monitoring (for volatiles and natural attenuation parameters would be reevaluated after 1 year.

HLA further recommends that a temporary groundwater use restriction be imposed for the shallow portion of the surficial aquifer pending results of the groundwater monitoring program.

The undersigned members of the OPT concur with the findings and recommendations of the preceding investigation.

STUDY AREA 39

Nancy Rodriguez U.S. Environmental Protection Agency, Region IV	4/22/99 Date
David P. Gibbs Florida Department of Environmental Protection	4/22/99 Date
Wayne G. Pound U.S. Department of the Navy	4-22-99 Date

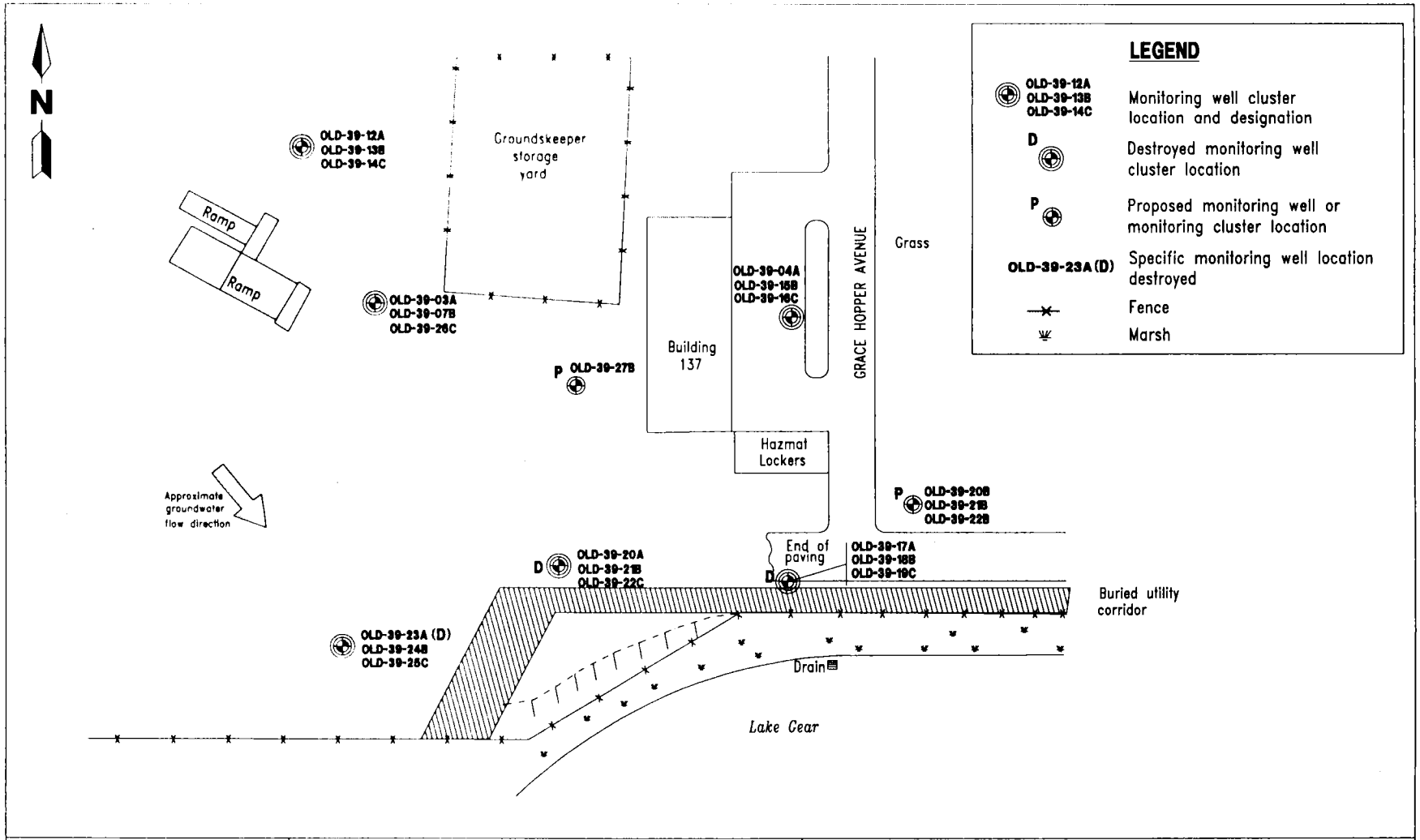

0 25 50
SCALE: 1 INCH = 50 FEET

FIGURE 5-2
PROPOSED REPLACEMENT LOCATIONS FOR MONITORING WELL NETWORK

K:\02530\02530-09\BCP\02530857.DWG, VC-VC 04/12/99 14:07:13, AutoCAD R14

BASE REALIGNMENT AND CLOSURE ENVIRONMENTAL SITE SCREENING REPORT, STUDY AREA 39

NAVAL TRAINING CENTER ORLANDO, FLORIDA

REFERENCES

ABB Environmental Services, Inc. (ABB-ES). 1995a. *Site Screening Plan, Groups I through V Study Areas and Miscellaneous Additional Sites, NTC, Orlando, Florida*. Prepared for Southern Division, Naval Facilities Engineering Command (SOUTHNAVFACENGCOM), North Charleston, South Carolina.

ABB-ES. 1995b. *Site Screening Plan, Former Air Force Sites, Addendum 2, NTC, Orlando, Florida*. Prepared for SOUTHNAVFACENGCOM, North Charleston, South Carolina.

ABB-ES. 1996. *Technical Memorandum, Site Survey Investigations, Study Areas 39, 40 and 45, NTC, Orlando, Florida*. Prepared for SOUTHNAVFACENGCOM, North Charleston, South Carolina.

ABB-ES. 1997a. *Approach for Evaluation of Study Areas with PAH Contamination Greater than Screening Criteria, Study Areas 16, 17, 18, 21, 23, 26 (Background Surface Soil Samples), 39 and 40 (letter memorandum)*. Prepared for SOUTHNAVFACENGCOM, North Charleston, South Carolina.

ABB-ES. 1997b. *Workplan, Supplemental Screening, Study Areas 39 (Former Coal Storage) and 40 (Former Bottle Landfill), Main Base, Naval Training Center (NTC), Orlando, Florida*. Prepared for SOUTHNAVFACENGCOM, North Charleston, South Carolina.

ABB-ES. 1997c. *Supplemental Site Screening Workplan, Study Area 39, NTC, Orlando, Florida*. Prepared for SOUTHNAVFACENGCOM, North Charleston, South Carolina.

ABB-ES. 1997d. *Cost Estimates for Surface Soil Remedial Options at Study Areas 39 & 40, Naval Training Center (NTC), Orlando, Florida*. Prepared for SOUTHNAVFACENGCOM, North Charleston, South Carolina.

ABB-ES. 1997e. *Technical Memorandum, Focused Risk Assessment, Surface Soil, SA 39 and 40 Surface Soil, Naval Training Center (NTC), Orlando, Florida*. Prepared for SOUTHNAVFACENGCOM, North Charleston, South Carolina.

ABB-ES. 1997f. *Project Operations Plan for Site Investigations and Remedial Investigations, Volumes I and I, Naval Training Center (NTC), Orlando, Florida*. Prepared for SOUTHNAVFACENGCOM, North Charleston, South Carolina.

ABB-ES. 1997g. *Study Areas 39 and 40 Sampling and Analysis Plan, Vertical Extent of Contamination in Surface Soil, Naval Training Center (NTC), Orlando, Florida*. Prepared for SOUTHNAVFACENGCOM, North Charleston, South Carolina.

Beck, B.F. and W.C. Sinclair. 1968. *Sinkholes in Florida*. Florida Sinkhole Research Institute Report 85-86-4.

Bouwer, H. and R.C. Rice. 1976. "A Slug Test for Determining Hydraulic Conductivity of Unconfined Aquifers with Completely or Partially Penetrating Wells." *Water Resources Bulletin* 12(3).

REFERENCES (Continued)

Bouwer, H., and R.C. Rice. 1989. "A Slug Test - An Update on Groundwater." *Water Resources Bulletin* 27(3).

U.S. Environmental Protection Agency, Region IV. 1997. *Draft, Region IV Approach to Natural Attenuation of Chlorinated Solvents*. Atlanta, Georgia

APPENDIX A

SUMMARY OF MONITORING WELL CONSTRUCTION DETAILS, MONITORING WELL ELEVATION SURVEY, HEAD POTENTIAL ELEVATION SURVEY, SOIL BORING LOGS, INDIVIDUAL WELL CONSTRUCTION DETAILS, AND GROUNDWATER SAMPLING FIELD DATA SHEETS

Table A-1
Monitoring Well Construction Details

Base Realignment and Closure
Environmental Site Screening Report
Study Area 39
Naval Training Center
Orlando, Florida

Well ID[1]	Date Installed	Borehole Depth (feet bls)	Well Depth (feet bls)	Screen Interval (feet bls)	Filter Pack Interval (feet bls)	Seal Interval (feet bls)	Grout Interval (feet bls)	Casing Depth (feet bls)
Initial Screening:								
OLD-39-01A	3/19/96	16.5	16	6 to 16	4 to 16.5	2 to 4	0 to 2	N/A
OLD-39-02A	3/19/96	16.5	16	6 to 16	4 to 16.5	2 to 4	0 to 2	N/A
OLD-39-03A	3/20/96	16.5	16	6 to 16	4 to 16.5	2 to 4	0 to 2	N/A
OLD-39-04A	3/20/96	15.5	15	5 to 15	3 to 15.5	2 to 3	0 to 2	N/A
OLD-39-05A	3/20/96	15.5	15	5 to 15	3 to 15.5	2 to 3	0 to 2	N/A
OLD-39-06A[2]	4/22/96	10.5	10.5	5.5 to 10.5	4 to 10.5	--	--	--
Supplemental Screening (Phase I):								
OLD-39-07B	11/21/96	32.5	32	27 to 32	25 to 32	22 to 25	0 to 22	N/A
OLD-39-08A[3]	11/25/96	17	17	8 to 17	5 to 17	2.5 to 5	0 to 2.5	N/A
OLD-39-09A[3]	11/25/96	17	17	8 to 17	5 to 17	2.5 to 5	0 to 2.5	N/A
OLD-39-10A[3]	11/25/96	17	17	8 to 17	5 to 17	2.5 to 5	0 to 2.5	N/A
OLD-39-11A[3]	11/25/96	17	17	8 to 17	6 to 17	3.5 to 6	0 to 3.5	N/A
Supplemental Screening (Phase II):								
OLD-39-12A	4/21/97	17	16	6 to 16	4 to 17	2 to 4	0 to 2	N/A
OLD-39-13B	4/22/97	28.5	28	23 to 28	21 to 28.5	17 to 21	0 to 17	N/A
OLD-39-14C	5/1/97	40.5	40	35 to 40	33 to 40.5	29 to 33	0 to 29	0 to 31
OLD-39-15B	4/22/97	24.5	24	19 to 24	17 to 24.5	13 to 17	0 to 13	N/A
OLD-39-16C	5/3/97	40.5	40	35 to 40	33 to 40.5	29 to 33	0 to 29	0 to 25
OLD-39-17A	4/22/97	17	16	6 to 16	4 to 16.5	2 to 4	0 to 2	N/A
OLD-39-18B	4/23/97	28.5	28	23 to 28	21 to 28.5	17 to 21	0 to 17	N/A
OLD-39-19C	5/2/97	50.5	50	45 to 50	43 to 50.5	39 to 43	0 to 39	0 to 31
OLD-39-20A	4/21/97	16.5	16	6 to 16	4 to 16.5	2 to 4	0 to 2	N/A
OLD-39-21B	4/22/97	28.5	28	23 to 28	21 to 28.5	17 to 21	0 to 17	N/A
OLD-39-22C	5/2/97	40.5	40	35 to 40	33 to 40.5	29 to 33	0 to 29	0 to 31
OLD-39-23A	4/21/97	16.5	16	6 to 16	4 to 16.5	2 to 4	0 to 2	N/A
OLD-39-24B	4/22/97	28.5	28	23 to 28	21 to 28.5	17 to 21	0 to 17	N/A
OLD-39-25C	5/2/97	40.5	40	35 to 40	33 to 40.5	29 to 33	0 to 29	0 to 31
OLD-39-26C	5/1/97	40.5	40	35 to 40	33 to 40.5	29 to 33	0 to 29	0 to 30.5

See notes at end of table.

Table A-1 (Continued)
Monitoring Well Construction Details

Base Realignment and Closure
Environmental Site Screening Report
Study Area 39
Naval Training Center
Orlando, Florida

[1] A, B, and C suffixes denote shallow, intermediate, and deep wells, respectively.
[2] Denotes a temporary monitoring well, installed with stainless steel hand auger.
[3] Denotes a microwell, installed by direct-push methods.

Notes: All permanent monitoring wells (excluding microwells) constructed with 2-inch-diameter PVC riser and screen (01-inch slot), and installed in a 6.5-inch-diameter borehole. Temporary monitoring well constructed with 2-inch-diameter PVC riser and screen (01-inch slot), and installed in a 3-inch-diameter borehole. Microwells constructed with 1-inch-diameter PVC riser and screen (01-inch slot), and installed in 2-inch-diameter borehole.

ID = identification.
bls = below land surface.
N/A = no surface casing utilized in construction.
PVC = polyvinyl chloride.
-- = not available.

Table A-2
Monitoring Well Elevation Survey

Base Realignment and Closure
Environmental Site Screening Report
Study Area 39
Naval Training Center
Orlando, Florida

Well Identifier	Horizontal Coordinates[1]		Top-of-Casing Elevation (feet msl)	Depth to Water (feet)		Water Elevation (feet msl)	
	Northing	Easting		7/9/97	7/25/97	7/9/97	7/25/97
OLD-39-12A	1535721.03	549637.86	117.92	12.15	11.34	105.77	106.58
OLD-39-13B	1535716.26	549638.03	117.74	11.92	11.23	105.82	106.51
OLD-39-14C	1535711.81	549638.42	117.73	12.03	11.47	105.70	106.26
OLD-39-03A	1535661.37	549665.12	116.76	11.22	10.40	105.54	106.36
OLD-39-07B	1535650.86	549671.94	116.90	11.50	10.66	105.40	106.24
OLD-39-26C	1535646.65	549676.23	116.66	11.21	10.64	105.45	106.02
OLD-39-04A	1535615.39	549865.44	115.16	11.00	10.03	104.16	105.13
OLD-39-15B	1535610.90	549865.25	115.13	10.96	10.07	104.17	105.06
OLD-39-16C	1535606.19	549865.16	115.09	11.04	10.35	104.05	104.76
OLD-39-20A	1535506.69	549735.61	117.56	12.74	11.80	104.82	105.76
OLD-39-21B	1535503.55	549731.57	117.61	12.74	11.90	104.87	105.71
OLD-39-22C	1535500.04	549727.15	117.70	12.74	12.18	104.96	105.52
OLD-39-23A	1535479.22	549646.59	116.73	11.38	10.61	105.35	106.12
OLD-39-24B	1535475.92	549649.60	116.54	11.21	10.45	105.33	106.09
OLD-39-25C	1535471.59	549653.49	116.32	11.11	10.58	105.21	105.74
OLD-39-17A	1535502.12	549849.97	116.42	11.87	11.15	104.55	105.27
OLD-39-18B	1535502.01	549854.42	116.41	11.89	11.18	104.52	105.23
OLD-39-19C	1535502.29	549860.22	116.38	12.41	11.86	103.97	104.52

[1] U.S. Geological Survey, North American Datum, 1927.

Note: msl = mean sea level.

Table A-3
Head Potential Elevation Survey

Base Realignment and Closure
Environmental Site Screening Report
Study Area 39
Naval Training Center
Orlando, Florida

Well Identifier	Water Level Elevation (feet msl)		Head Potential Measurements (feet)			
			July 7, 1997		July 25, 1997	
	July 9, 1997	July 25, 1997	Vertical Gradient[1] (ft/ft)	Direction of Groundwater Flow[2]	Vertical Gradient (ft/ft)	Direction of Groundwater Flow
OLD-39-12A	105.77	106.58				
OLD-39-13B	105.82	106.51	0.003	Downward	0.013	Downward
OLD-39-14C	105.70	106.26				
OLD-39-03A	105.54	106.36				
OLD-39-07B	105.40	106.24	0.008	Downward	0.014	Downward
OLD-39-26C	105.45	106.02				
OLD-39-04A	104.16	105.13				
OLD-39-15B	104.17	105.06	0.004	Downward	0.015	Downward
OLD-39-16C	104.05	104.74				
OLD-39-20A	104.82	105.76				
OLD-39-21B	104.87	105.71	0.006	Upward	0.010	Downward
OLD-39-22C	104.96	105.52				
OLD-39-23A	105.35	106.12				
OLD-39-24B	105.33	106.09	0.006	Downward	0.015	Downward
OLD-39-25C	105.21	105.74				
OLD-39-17A	104.55	105.27				
OLD-39-18B	104.52	105.23	0.016	Downward	0.021	Downward
OLD-39-19C	103.97	104.52				
Average			0.007		0.015	

[1] Calculated by dividing the difference in the water-level elevation between the shallow and deep monitoring wells by the difference in the vertical distance between center point of screened interval of each well.
[2] Direction of groundwater flow as determined by difference in head potential.

Notes: msl = mean sea level.
ft/ft = feet per foot.

Project: BRAC NTC	**Site:** S.A. 39		**Boring ID:** OLD-39-01
Client: SOUTHDIVNAVFACENGCOM			**Job No.:** 8518.10
Contractor: GPI		**Date started:** 03/19/98	**Compltd:** 03/19/98
Method: HSA	**Casing Size:** 10 in. OD	**Screen Int.:** 10 ft.	**Protection level:** D
Ground Elev.:	**Type of OVM.:** Porta FID II	**Total depth:** 18Ft.	**Dpth to ∇** 11 Ft.
Logged by: WDO	**Material:** PVC		

Depth Ft.	Sample ID (Depth) (Type)	Split Spoon	Recovery	Headspace (ppm)	Soil/Rock Description and comments	Lithologic symbol	Soil class.	Blows/6-in.
	39B00101 0-1' CLP				Asphalt/limerock subgrade			
				0	Fine SAND, off-white, subrounded, loose, dry to 11 ft.		SP	Posthole
				0				3,6,8,9
5			80%					
				0				4,4,6,9
			80%					
	39B00102 8-10' CLP			0				5,7,10,12
			70%					
10				0				8,7,8,8
			80%					∇
				0				8,10,12,13
			90%		Fine SAND with silt, dark brown		SM	
				0				8,8,14,13
15			100%					
					Boring terminated at 18 feet bgs			
20								

 ABB ENVIRONMENTAL SERVICES, INC.

DEPARTMENT OF THE NAVY
SOUTHERN DIVISION
NAVAL FACILITIES ENGINEERING COMMAND
2155 EAGLE DR., P. O. BOX 10068
CHARLESTON, S. C. 29411-0068

WELL CONSTRUCTION DETAILS

WELL NUMBER OLO-39-01

DATE OF INSTALLATION 3/10/96

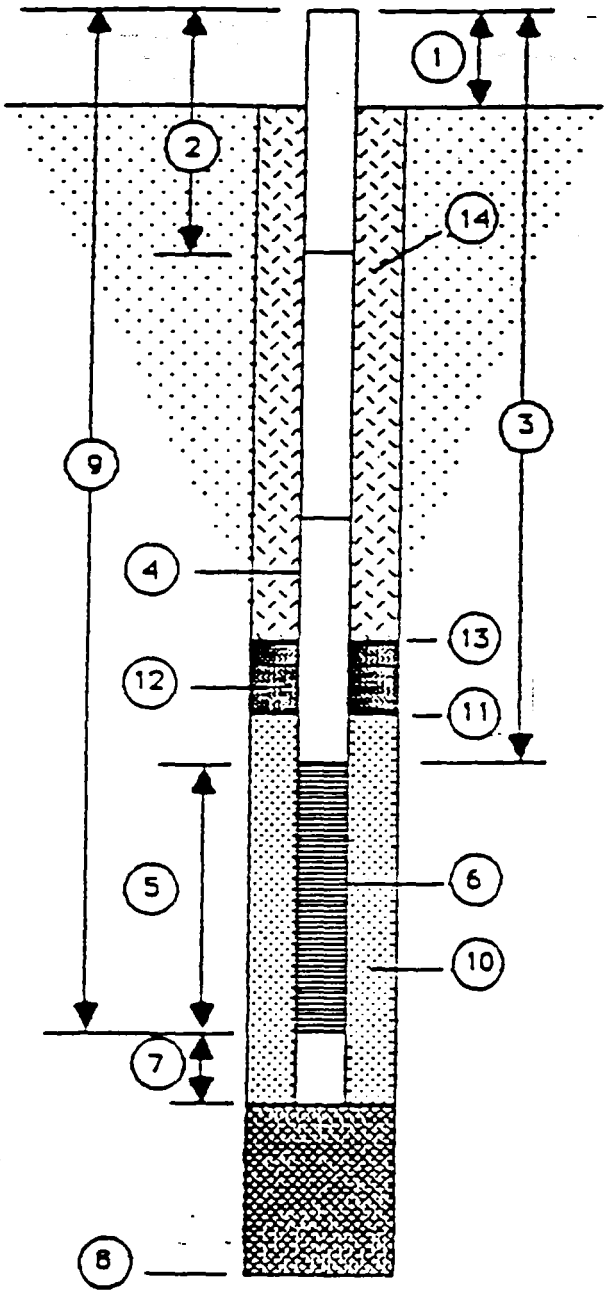

1. Height of Casing above ground Flush
2. Depth to first Coupling 6' BLS
   Coupling Interval Depths 6' 16'
3. Total Length of Blank Pipe 6'
4. Type of Blank Pipe Schedule 40 PVC
5. Length of Screen 10'
6. Type of Screen 0.010 Slot Screen
7. Length of Sump 6"
8. Total Depth of Boring 16.5' Hole Diameter 8"
9. Depth To Bottom of Screen 16'
10. Type of Screen Filter 20/40 Silica Sand
    Quantity Used 500 lbs Size 20/40 U/C
11. Depth To Top of Filter 3' 3-6' 30/65 Sand
12. Type of Seal Bentonite
    Quantity Used 25 lbs
13. Depth To Top of Seal 2 ½'
14. Type of Grout Portland
    Grout Mixture Bentonite
    Method of Placement Poured

COMMENTS ON INSTALLATION:

GROUNDWATER SAMPLE FIELD DATA

Project: NTC ORLANDO
Project Number: 08519.10
Sample Location ID: OLD-39-01
Time: Start: 0905 End: 1145

Point of Interest: SA 39
Date: ~~4-16-96~~ 4-2-96
WDO
Signature of Sampler: [illegible] D. Olson

Water Level/Well Data

Well Depth 16.11 Ft. — X Measured / ___ Historical

X Top of Well / ___ Top of Protective Casing

Well Riser Stick-up (from ground) FM Ft.

Protective Casing/Well Difference NA Ft.

Protective Casing NA Ft.

Depth to Water 10.34 Ft.

Well Material: X PVC / ___ SS

Well Locked?: X Yes / ___ No

Well Dia. X 2 inch / ___ 4 inch / ___ 6 inch

Water Level Equip. Used: X Elect. Cond. Probe / ___ Float Activated / ___ Press. Transducer

Height of Water Column 5.77 Ft. X ✓ .16 Gal/Ft. (2 in.) / ___ .65 Gal/Ft. (4 in.) / ___ 1.5 Gal/Ft. (6 in.) / ___ Gal/Ft. (___ in.) = 0.92 Gal/Vol; 10 Total Gal Purged

Well Integrity:	Yes	No
Prot. Casing Secure	✓	
Concrete Collar Intact	✓	
Other		

Equipment Documentation

Purging/Sampling Equipment Used:

(✓ If Used For) Purging	Sampling		Equipment ID
X	X	Peristaltic Pump	
		Submersible Pump	
		Bailer	
		PVC/Silicon Tubing	
X	X	Teflon/Silicone Tubing	
		Airlift	
		Hand Pump	
		In-line Filter	
		Press/Vac Filter	

Decontamination Fluids Used: (✓ All That Apply at Location)

- ___ Methanol (100%)
- ___ 25% Methanol/75% ASTM Type II water
- X Deionized Water
- ___ Liquinox Solution
- ___ Hexane
- ___ HNO_3/D.I. Water Solution
- ___ Potable Water
- ___ None

Field Analysis Data

Ambient Air VOC Ø ppm Well Mouth Ø ppm

Field Data Collected ___ In-line / X In Container

Sample Observations: ___ Turbid / X Colored / ___ Clear / ___ Odor / X Cloudy

Purge Data	@ Ø Gal.	@ 8.5 Gal.	@ 9.0 Gal.	@ 9.5 Gal.	@ 10 Gal.
Temperature, Deg. C	21.5	22.5	23.0	23.0	23.0
pH, units	5.59	6.16	6.66	6.17	6.17
Specific Conductivity	120	155	152	158	160
Turb ~~(umhos/cm @ 25 Deg. C)~~	28.3	109.1	101.3	105.7	96.4
Oxidation - Reduction, +/- mv					
Dissolved Oxygen, ppm					

Sample Collection Requirements (✓ If Required at this Location)

Analytical Parameter	✓ If Field Filtered	Preservation Method	Volume Required	✓ If Sample Collected	Sample Bottle IDs
VOA		HCL	3x40 ml	✓	/ / /
SVOA		4OC	2L	✓	/ / /
Pest/PCB		4OC	2L	✓	/ / /
Inorganics		HNO_3	1L	✓	/ / /
Explosives		4°C	3x1L	✓	/ / /
TPH		H_2SO_4			/ / /
TOC		H_2SO_4			/ / /
Nitrate		H_2SO_4			/ / /

Notes:

Project: BRAC NTC		**Site:** S.A. 39	**Boring ID:** OLD-39-02
Client: SOUTHDIVNAVFACENGCOM			**Job No.:** 8519.10
Contractor: GPI		**Date started:** 03/19/98	**Compltd:** 03/19/98
Method: HSA	**Casing Size:** 10 in. OD	**Screen Int.:** 10 ft.	**Protection level:** D
Ground Elev.:	**Type of OVM.:** Porta FID II	**Total depth:** 18Ft.	**Dpth to ∇** 11 Ft.
Logged by: WDO	**Material:** PVC		-

Depth Ft.	Sample ID (Depth) (Type)	Split Spoon	Recovery	Headspace (ppm)	Soil/Rock Description and comments	Lithologic symbol	Soil class.	Blows/6-in.
	39B00201-D,MS/MSD 0-1' CLP				Limerock/gray gravelly fill			
				0	Fine SAND, off-white, loose, dry, subrounded, trace brown silt as mottling, silty layer at 8-8.5'		SP	Posthole
				0				2,4,6,8
5			90%					
				0				6,7,9,12
			70%					
	39B00202 8-10' CLP			0				9,8,5,6
			70%		Silty SAND, dark brown, cohesive		SM	
10				0	Fine SAND, off-white		SP	9,8,7,11
			100%		Silty SAND, brown		SM	∇
				0				4,5,5,18
			100%					
				0				5,12,25,38
15			100%					
					Boring terminated at 18 feet bgs			
20								

 ABB ENVIRONMENTAL SERVICES, INC.

DEPARTMENT OF THE NAVY
SOUTHERN DIVISION
NAVAL FACILITIES ENGINEERING COMMAND
2155 EAGLE DR., P. O. BOX 10068
CHARLESTON, S. C. 29411-0068

WELL CONSTRUCTION DETAILS

WELL NUMBER OLC-39-02

DATE OF INSTALLATION 3/19/92

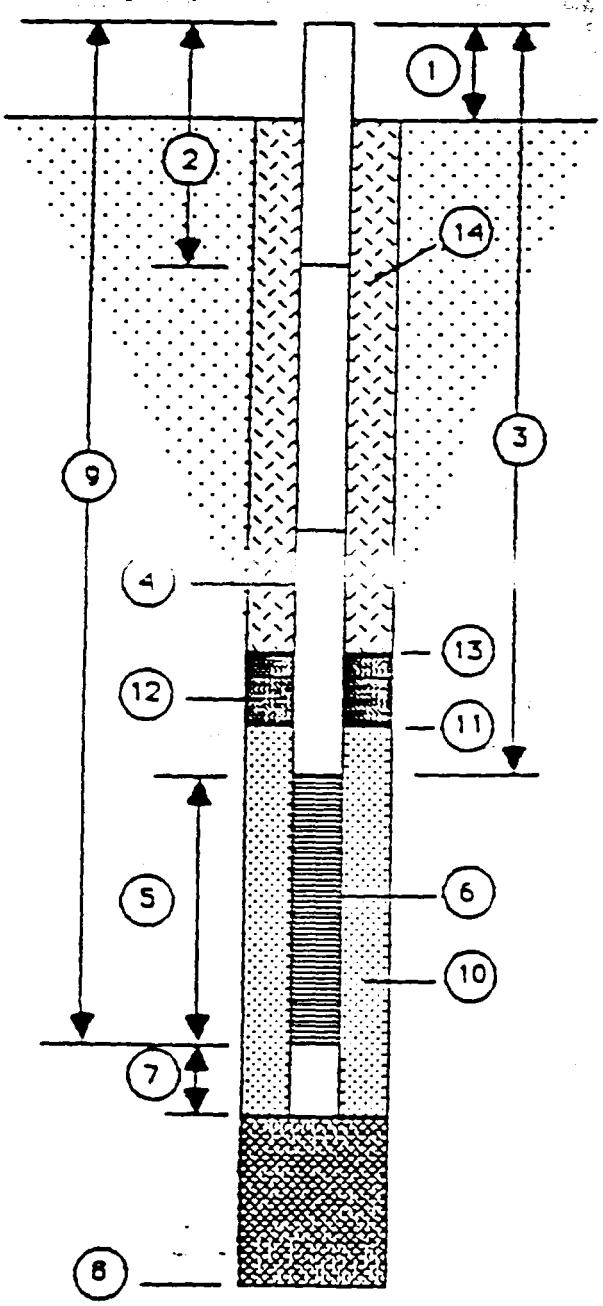

1. Height of Casing above ground Flush
2. Depth to first Coupling 6' BLS
   Coupling Interval Depths 6' 16'
3. Total Length of Blank Pipe 6'
4. Type of Blank Pipe Schedule 40 PVC
5. Length of Screen 10'
6. Type of Screen 0.010 Slot Screen
7. Length of Sump 6"
8. Total [illegible] 8"
9. Depth To Bottom of Screen 16'
10. Type of Screen Filter [illegible] Sand
    Quantity Used 500 lb Size [illegible] U/C
11. Depth To Top of Filter 3' [illegible] Sand
12. Type of Seal Bentonite
    Quantity Used 50 lb
13. Depth To Top of Seal 2 1/2'
14. Type of Grout Portland
    Grout Mixture Bentonite
    Method of Placement Pour

COMMENTS ON INSTALLATION:

GROUNDWATER SAMPLE FIELD DATA

Project: NTC ORLANDO
Point of Interest: SA 39
Project Number: 08519.10
Date: 4-2-96
Sample Location ID: OLD-39-02
Time: Start: 1218 End: 1425
Signature of Sampler: William D. Olson

Water Level/Well Data

Well Depth 16 Ft. — ___ Measured / ✓ Historical — ✓ Top of Well / ___ Top of Protective Casing — Well Riser Stick-up (from ground) FM Ft. — Protective Casing/Well Difference NA Ft. — Protective Casing NA Ft.

Depth to Water 9.96 Ft. — Well Material: X PVC / ___ SS — Well Locked?: X Yes / ___ No — Well Dia. X 2 inch / ___ 4 inch / ___ 6 inch — Water Level Equip. Used: X Elect. Cond. Probe / ___ Float Activated / ___ Press. Transducer

Height of Water Column 6.04 Ft. X ✓ .16 Gal/Ft. (2 in.) / ___ .65 Gal/Ft. (4 in.) / ___ 1.5 Gal/Ft. (6 in.) / ___ Gal/Ft. (__ in.) = 0.96 Gal/Vol; 3 Total Gal Purged

Well Integrity:	Yes	No
Prot. Casing Secure	✓	
Concrete Collar Intact	✓	
Other		

Equipment Documentation

Purging/Sampling Equipment Used:

(✓ If Used For) Purging	Sampling		Equipment ID
✓	✓	Peristaltic Pump	
		Submersible Pump	
		Bailer	
		PVC/Silicon Tubing	
✓	✓	Teflon/Silicon Tubing	
		Airlift	
		Hand Pump	
		In-line Filter	
		Press/Vac Filter	

Decontamination Fluids Used:

(✓ All That Apply at Location)
- ___ Methanol (100%)
- ___ 25% Methanol/75% ASTM Type II water
- ___ Deionized Water
- ___ Liquinox Solution
- ___ Hexane
- ___ HNO_3/D.I. Water Solution
- ___ Potable Water
- ___ None

Field Analysis Data

Ambient Air VOC Ø ppm Well Mouth Ø ppm Field Data Collected ___ In-line / X In Container

Sample Observations: ___ Turbid / X Clear / ___ Cloudy / ___ Colored / ___ Odor

Purge Data	@ Ø Gal.	@ 1.5 Gal.	@ 2.0 Gal.	@ 2.5 Gal.	@ 3 Gal.
Temperature, Deg. C	23.5	23.5	23.5	23.0	23.0
pH, units	4.57	4.49	4.48	4.49	4.50
Specific Conductivity	900	750	720	750	710
TURB ~~(umhos/cm @ 25 Deg. C)~~	16.98	7.76	4.61	3.18	2.08
Oxidation - Reduction, +/- mv					
Dissolved Oxygen, ppm					

Sample Collection Requirements (✓ If Required at this Location)

Analytical Parameter	✓ If Field Filtered	Preservation Method	Volume Required	✓ If Sample Collected	Sample Bottle IDs
VOA		HCL	3x40ml	✓	/ / /
SVOA		4°C	2L	✓	/ / /
Pest/PCB		4°C	2L	✓	/ / /
Inorganics		HNO_3	1L	✓	/ / /
Explosives		4°C	2x1L	✓	/ / /
TPH		H_2SO_4			/ / /
TOC		H_2SO_4			/ / /
Nitrate		H_2SO_4			/ / /

Notes:

Project: BRAC NTC	**Site:** S.A. 39		**Boring ID:** OLD-39-03
Client: SOUTHDIVNAVFACENGCOM			**Job No.:** 8519.10
Contractor: GPI		**Date started:** 03/20/98	**Compltd:** 03/20/98
Method: HSA	**Casing Size:** 10 in. OD	**Screen Int.:** 10 ft.	**Protection level:** D
Ground Elev.:	**Type of OVM.:** Porta FID II	**Total depth:** 18Ft.	**Dpth to ▽** 11 Ft.
Logged by: WDO	**Material:** PVC		

Depth Ft.	Sample ID (Depth) (Type)	Split Spoon	Recovery	Headspace (ppm)	Soil/Rock Description and comments	Lithologic symbol	Soil class.	Blows/6-in.
	39B00301 0-1' CLP				Limerock			
				0	Fine SAND, tan, loose, damp, subrounded quartz sand		SP	Posthole
				0				1,2,2,3
5			60%		Fine SAND and silty fine SAND, brown to off-white, wet at 11 ft.		SM	
				0				2,4,4,3
			80%					
	39B00302 39B00302D 8-10' CLP			0				4,5,6,7
			90%					
10				0				3,4,8,15
			90%					▽
				0				6,9,14,20
			70%		Silty SAND, brown			
				0				18,27,24,29
15			80%					
					Boring terminated at 18 feet bgs			
20								

 ABB ENVIRONMENTAL SERVICES, INC.

DEPARTMENT OF THE NAVY
SOUTHERN DIVISION
NAVAL FACILITIES ENGINEERING COMMAND
2155 EAGLE DR., P. O. BOX 10068
CHARLESTON, S. C. 29411-0068

WELL CONSTRUCTION DETAILS

WELL NUMBER OLD-39-03

DATE OF INSTALLATION 3/20/96

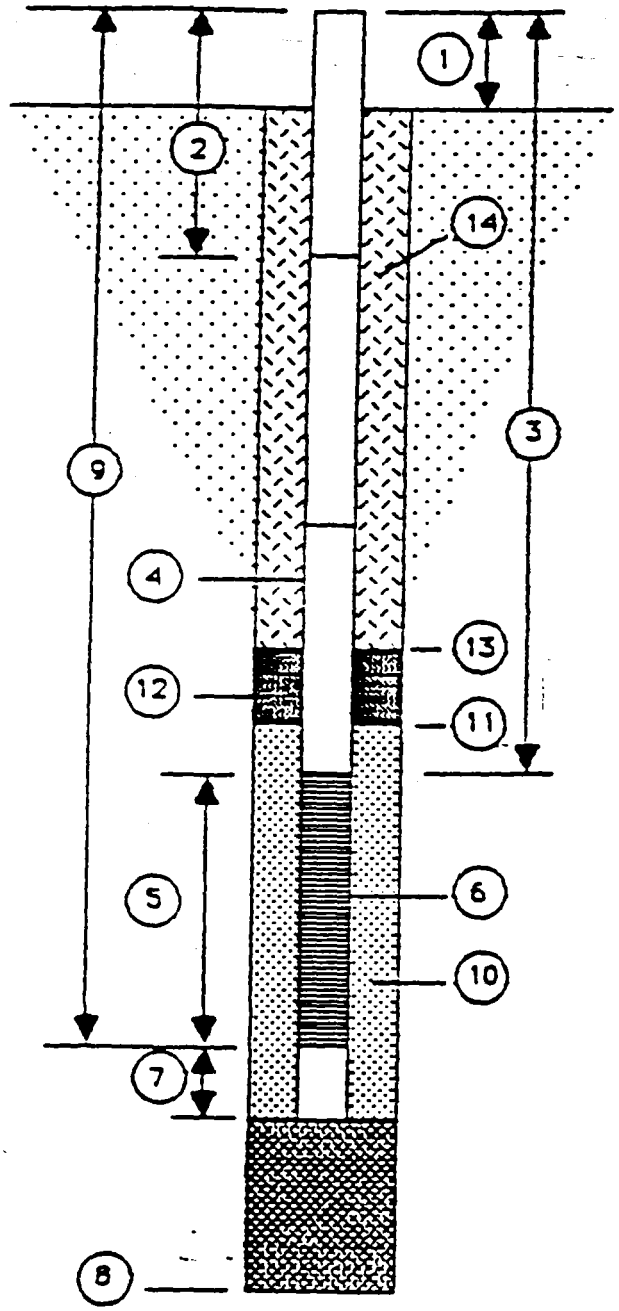

1. Height of Casing above ground Flush
2. Depth to first Coupling 6' ALS
   Coupling Interval Depths 6', 16'
3. Total Length of Blank Pipe 6'
4. Type of Blank Pipe Schedule 40 PVC
5. Length of Screen 10'
6. Type of Screen 0.010 Slot Screen
7. Length of Sump 6"
8. Total Depth of Boring 16.5' Hole Diameter 8"
9. Depth To Bottom of Screen 16'
10. Type of Screen Filter 20/30 Silica Sand
    Quantity Used 550 Size 20/30 U/C
11. Depth To Top of Filter 3' 3-6' 3/65 Sand
12. Type of Seal Bentonite
    Quantity Used 50 lb
13. Depth To Top of Seal 2½'
14. Type of Grout Portland
    Grout Mixture Bentonite
    Method of Placement Pour

COMMENTS ON INSTALLATION:

GROUNDWATER SAMPLE FIELD DATA

Project: NTC ORLANDO
Project Number: 08519.10
Sample Location ID: OLD-39-03
Time: Start: 1022 End: 1211

Point of Interest: SA39
Date: 4-3/96
Signature of Sampler: [signature]

Water Level/Well Data

Well Depth 16.29 Ft. — X Measured ___ Historical

X Top of Well ___ Top of Protective Casing ___ ___

Well Riser Stick-up (from ground) FM Ft.

Protective Casing/Well Difference NA Ft.

Protective Casing NA Ft.

Depth to Water 8.54 Ft.

Well Material: X PVC ___ SS ___

Well Locked?: X Yes ___ No

Well Dia. X 2 inch ___ 4 inch ___ 6 inch ___

Water Level Equip. Used: X Elect. Cond. Probe ___ Float Activated ___ Press. Transducer ___

Height of Water Column 7.75 Ft. X ✓ .16 Gal/Ft. (2 in.) ___ .65 Gal/Ft. (4 in.) ___ 1.5 Gal/Ft. (6 in.) ___ ___ Gal/Ft. (___ in.) = 1.24 Gal/Vol; 5 Total Gal Purged

Well Integrity:	Yes	No
Prot. Casing Secure	✓	
Concrete Collar Intact	✓	
Other		

Equipment Documentation

Purging/Sampling Equipment Used:

(✓ If Used For) Purging	Sampling		Equipment ID
X	X	Peristaltic Pump	
		Submersible Pump	
		Bailer	
		PVC/Silicon Tubing	
X	X	Teflon/Silicon Tubing	
		Airlift	
		Hand Pump	
		In-line Filter	
		Press/Vac Filter	

Decontamination Fluids Used: (✓ All That Apply at Location)

___ Methanol (100%)
___ 25% Methanol/75% ASTM Type II water
X Deionized Water
___ Liquinox Solution
___ Hexane
___ HNO_3/D.I. Water Solution
___ Potable Water
___ None

Field Analysis Data

Ambient Air VOC Ø ppm Well Mouth Ø ppm

Field Data Collected ___ In-line X In Container

Sample Observations: ___ Turbid ___ Clear ___ Cloudy ___ Colored ___ Odor

Purge Data	@ Ø Gal.	@ 2 Gal.	@ 3 Gal.	@ 4 Gal.	@ 5 Gal.
Temperature, Deg. C	23.0	23.0	23.0	23.0	23.0
pH, units	6.51	6.61	6.60	6.61	6.60
Specific Conductivity	274	278	278	273	292
TURB ~~[illegible]~~	28.7	24.3	21.9	20.3	19.36
Oxidation - Reduction, +/- mv					
Dissolved Oxygen, ppm					

Sample Collection Requirements (✓ If Required at this Location)

Analytical Parameter	✓ If Field Filtered	Preservation Method	Volume Required	✓ If Sample Collected	Sample Bottle IDs
VOA		HCL		✓	/ / /
SVOA		4OC		✓	/ / /
Pest/PCB		4OC		✓	/ / /
Inorganics		HNO_3		✓	/ / /
Explosives		4°C		✓	/ / /
TPH		H_2SO_4			/ / /
TOC		H_2SO_4			/ / /
Nitrate		H_2SO_4			/ / /

Notes:

GROUNDWATER SAMPLE FIELD DATA

Project: SA 39 SWMU SCREENING
Point of Interest: OLD-39-03
Project Number: 8579.10
Date: 11/27/96
Sample Location ID: OLD-39-03
Time: Start: 0919 End: 1055
Signature of Sampler:

Water Level/Well Data

Well Depth 16' Ft. — X Measured / X Historical

Top of Well / Top of Protective Casing

Well Riser Stick-up (from ground) ____ Ft.

Protective Casing/Well Difference ____ Ft.

Protective Casing ____ Ft.

FLUSH

Depth to Water 10.84 Ft.

Well Material: X PVC / SS

Well Locked?: X Yes / No

Well Dia. X 2 inch / 4 inch / 6 inch

Water Level Equip. Used: X Elect. Cond. Probe / Float Activated / Press. Transducer

Height of Water Column 7 Ft. X X .16 Gal/Ft. (2 in.) / .65 Gal/Ft. (4 in.) / 1.5 Gal/Ft. (6 in.) / Gal/Ft. (in.) = 2 Gal/Vol; 20 Total Gal Purged

Well Integrity:

	Yes	No
Prot. Casing Secure	X	
Concrete Collar Intact	X	
Other	X	

Equipment Documentation

Purging/Sampling Equipment Used:

Purging	Sampling		Equipment ID
	X	Peristaltic Pump	NA
		Submersible Pump	
		Bailer	
		PVC/Silicon Tubing	
		Teflon/Silicon Tubing	
		Airlift	
		Hand Pump	
		In-line Filter	
		Press/Vac Filter	

Decontamination Fluids Used: (✓ All That Apply at Location)

- Methanol (100%)
- 25% Methanol/75% ASTM Type II water
- Deionized Water
- Liquinox Solution
- Hexane
- HNO_3/D.I. Water Solution
- Potable Water
- None
- X NEW TUBING

Field Analysis Data

Ambient Air VOC 0 ppm Well Mouth 0 ppm

Field Data Collected: In-line / X In Container

Sample Observations: Turbid / X Clear / Cloudy / Colored / Odor

Purge Data	@ INITIAL Gal.	@ 6 Gal.	@ 10 Gal.	@ 14 Gal.	@ 20 Gal.
Temperature, Deg. C	22	23	23	24	24
pH, units	6.97	6.97	6.35	6.96	6.99
Specific Conductivity (umhos/cm. @ 25 Deg. C.)	249	248	242	247	258
Oxidation - Reduction, +/- mv					
~~Dissolved Oxygen, ppm~~ TURB	5.91	4.44	3.86	3.87	3.76

Sample Collection Requirements (✓ If Required at this Location)

Analytical Parameter	✓ If Field Filtered	Preservation Method	Volume Required	✓ If Sample Collected	Sample Bottle IDs
VOA		HCL			/ / /
SVOA		4OC			/ / /
Pest/PCB		4OC			/ / /
Inorganics		HNO_3			/ / /
Explosives		4°C			/ / /
TPH		H_2SO_4			/ / /
TOC		H_2SO_4			/ / /
Nitrate		H_2SO_4			/ / /

Notes: COLLECT 5x 40 ml VOACS, ANALYZED FOR IDPA 524.2

COLLECT DUPLICATE OLD-39-03 AT THIS LOCATION

GROUNDWATER SAMPLE FIELD DATA

Project: NTC ORLANDO
Point of Interest: SA 39
Project Number: 08545.10
Date: 5-16/92
Sample Location ID: OLD-39-03A
Time: Start: 1000 End: 1245
Signature of Sampler:

Water Level/Well Data

Well Depth 16.00 ft — X Measured / ___ Historical — X Top of Well / ___ Top of Protective Casing

Well Riser Stick-up (from ground) NA ft.

Protective Casing/Well Difference NA ft.

Protective Casing NA ft.

Depth to Water 12.42 ft.

Well Material: X PVC / ___ SS

Well Locked?: X Yes / ___ No

Well Dia. X 2 inch / ___ 4 inch / ___ 6 inch

Water Level Equip. Used: X Elect. Cond. Probe / ___ Float Activated / ___ Press. Transducer

Height of Water Column 3.58 ft. X [X 16 Gal/ft. (2 in.) / ___ 65 Gal/ft. (4 in.) / ___ 1.5 Gal/ft. (6 in.) / ___ Gal/ft. (___ in.)] = 0.57 Gal/Vol; 5 Total Gal Purged

Well Integrity: Prot. Casing Secure / Concrete Collar Intact / Other — NA

	Yes	No
Prot. Casing Secure		
Concrete Collar Intact		
Other		

Equipment Documentation

Purging/Sampling Equipment Used:

(✓ If Used For) Purging	Sampling		Equipment ID
X	X	Peristaltic Pump	
		Submersible Pump	
		Bailer	
		PVC/Silicon Tubing	
X	X	Teflon/Silicon Tubing	
		Airlift	
		Hand Pump	
		In-line Filter	
		Press/Vac Filter	

Decontamination Fluids Used: (✓ All That Apply at Location)

- ___ Methanol (100%)
- ___ 25% Methanol/75% ASTM Type II water
- X Deionized Water
- ___ Liquinox Solution
- ___ Hexane
- ___ HNO_3/D.I. Water Solution
- ___ Potable Water
- ___ None

Field Analysis Data

Ambient Air VOC Ø ppm Well Mouth Ø ppm

Field Data Collected: ___ In-line / X In Container

Sample Observations: ___ Turbid / X Clear / ___ Cloudy / ___ Colored / ___ Odor

Purge Data	@ 0.1 Gal.	@ 1.5 Gal.	@ 2.5 Gal.	@ 4.2 Gal.	@ 5 Gal.
Temperature, Deg. C	23.6	23.6	23.5	24.0	24.8
pH, units	6.51	6.38	6.42	6.46	6.48
Specific Conductivity (~~umhos/cm @ 25 Deg. C.~~)	227	211	210	209	211
NTU	13.82	7.10	3.42	2.88	2.64
Oxidation - Reduction, mv	—	—	—	—	213.2
Dissolved Oxygen, ~~ppm~~	—	—	—	—	3.0 mg/l

Fe 0.1 mg/l
CO_2 40 mg/l
Cl^- 10 mg/l
H_2S 0.1 mg/l
Fe^{2+} 0.1 mg/l
ALK(PH) Ø
ALK 81.6

Sample Collection Requirements (✓ If Required at this Location)

Analytical Parameter	✓ If Field Filtered	Preservation Method	Volume Required	✓ If Sample Collected	Sample Bottle IDs
VOA		HCL			/ / /
SVOA		4OC			/ / /
Pest/PCB		4OC			/ / /
Inorganics		HNO_3			/ / /
Explosives		4°C			/ / /
~~TPH~~		H_2SO_4			/ / /
TOC		H_2SO_4			/ / /
Nitrate		H_2SO_4			/ / /

Notes:

Project: BRAC NTC	**Site:** S.A. 39		**Boring ID:** OLD-39-04
Client: SOUTHDIVNAVFACENGCOM			**Job No.:** 8519.10
Contractor: GPI		**Date started:** 03/20/98	**Compltd:** 03/20/98
Method: HSA	**Casing Size:** 10 In. OD	**Screen Int.:** 10 ft.	**Protection level:** D
Ground Elev.:	**Type of OVM.:** Porta FID II	**Total depth:** 18Ft.	**Dpth to ▽** 9 Ft.
Logged by: WDO	**Material:** PVC		

Depth Ft.	Sample ID (Depth) (Type)	Split Spoon	Recovery	Headspace (ppm)	Soil/Rock Description and comments	Lithologic symbol	Soil class.	Blows/6-in.
	39B00401 0-1' CLP				Asphalt/limerock			
				0	Fine SAND with silt, brown		SM	Posthole
				0	Fine SAND, yellow, subrounded, some black grains		SP	2,2,2,2
5			90%					
				0				2,2,2,2
			70%		Fine SAND and silty fine SAND, brown, wet at 9 feet, increased silt with depth		SM	
	39B00402 8-10' CLP			0				2,2,2,2
			90%					▽
10				0				2,3,8,10
			80%					
				0				7,9,12,13
			80%					
				0				5,8,11,13
15			90%					
					Boring terminated at 18 feet bgs			
20								

 ABB ENVIRONMENTAL SERVICES, INC.

DEPARTMENT OF THE NAVY
SOUTHERN DIVISION
NAVAL FACILITIES ENGINEERING COMMAND
2155 EAGLE DR., P. O. BOX 10068
CHARLESTON, S. C. 29411-0068

WELL CONSTRUCTION DETAILS

WELL NUMBER OLD-20-04

DATE OF INSTALLATION 3/20/92

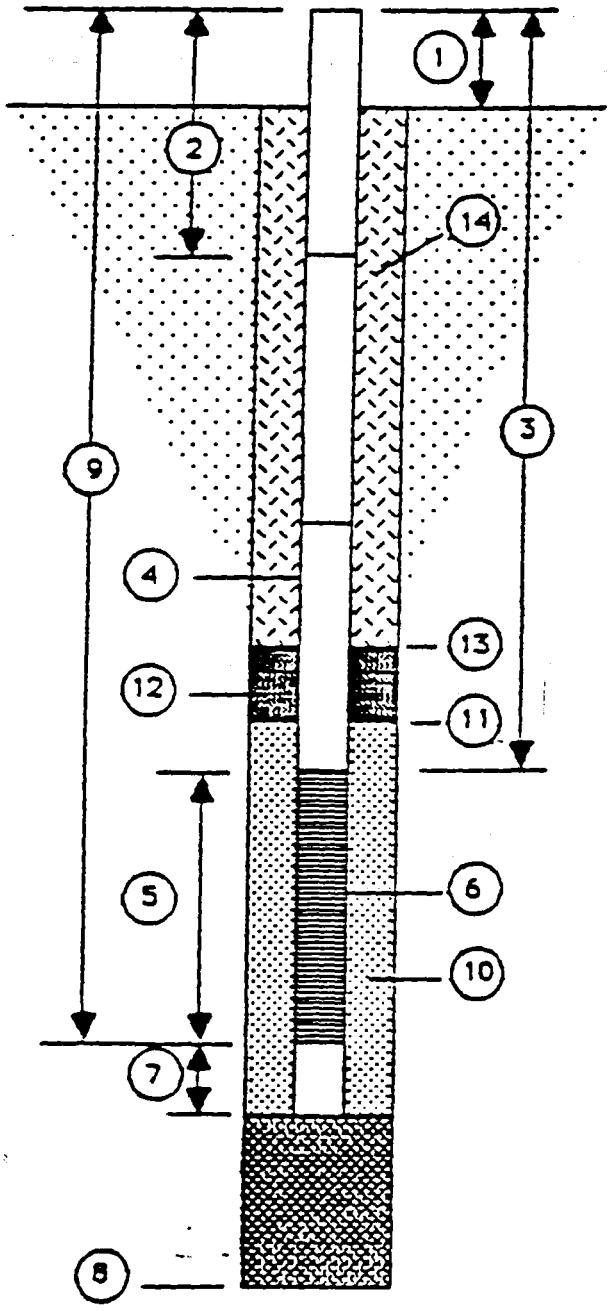

1. Height of Casing above ground Flush
2. Depth to first Coupling 6' ALS

   Coupling Interval Depths 6', 16'
3. Total Length of Blank Pipe 6'
4. Type of Blank Pipe Schedule 40 PVC
5. Length of Screen 10'
6. Type of Screen 0.010 Slot Screen
7. Length of Sump 6"
8. Total Depth of Boring 16.5' Hole Diameter 8"
9. Depth To Bottom of Screen 16'
10. Type of Screen Filter 20/30 Silica Sand

    Quantity Used 450# Size 20/30 U/C
11. Depth To Top of Filter 3' 3-6' 3/65 Sand
12. Type of Seal Bentonite

    Quantity Used 12 lb
13. Depth To Top of Seal 2½'
14. Type of Grout Portland

    Grout Mixture Bentonite

    Method of Placement Pour

COMMENTS ON INSTALLATION:

GROUNDWATER SAMPLE FIELD DATA

Project: NTC ORLANDO
Point of Interest: SA 39
Project Number: 08519.10
Date: 4-3/96
Sample Location ID: OLD-39-04
Time: Start: 1300 End: 1357
Signature of Sampler: WDO

Water Level/Well Data

Well Depth 14.94 Ft. X Measured ___ Historical

X Top of Well ___ Top of Protective Casing ___ ___

Well Riser Stick-up (from ground) FM Ft.

Protective Casing/Well Difference NA Ft.

Protective Casing NA Ft.

Depth to Water 7.91 Ft.

Well Material: X PVC ___ SS ___

Well Locked?: X Yes ___ No

Well Dia. X 2 inch ___ 4 inch ___ 6 inch ___ ___

Water Level Equip. Used: X Elect. Cond. Probe ___ Float Activated ___ Press. Transducer ___ ___

Height of Water Column 7.03 Ft. X ✓ .16 Gal/Ft. (2 in.) ___ .65 Gal/Ft. (4 in.) ___ 1.5 Gal/Ft. (6 in.) ___ ___ Gal/Ft. (___ in.) = 1.12 Gal/Vol; 4.5 Total Gal Purged

Well Integrity:	Yes	No
Prot. Casing Secure	✓	
Concrete Collar Intact	✓	
Other ___		

Equipment Documentation

Purging/Sampling Equipment Used:

(✓ If Used For) Purging	Sampling		Equipment ID
✓	✓	Peristaltic Pump	
		Submersible Pump	
		Bailer	
		PVC/Silicon Tubing	
✓	✓	Teflon/~~Silicon~~ Tubing	
		Airlift	
		Hand Pump	
		In-line Filter	
		Press/Vac Filter	

Decontamination Fluids Used:

(✓ All That Apply at Location)

- ___ Methanol (100%)
- ___ 25% Methanol/75% ASTM Type II water
- ✓ Deionized Water
- ___ Liquinox Solution
- ___ Hexane
- ___ HNO_3/D.I. Water Solution
- ___ Potable Water
- ___ None

Field Analysis Data

Ambient Air VOC Ø ppm Well Mouth Ø ppm

Field Data Collected ___ In-line X In Container

Sample Observations: ___ Turbid ___ Clear ___ Cloudy ___ Colored ___ Odor

Purge Data	@ Ø Gal.	@ 3.0 Gal.	@ 3.5 Gal.	@ 4.0 Gal.	@ 4.5 Gal.
Temperature, Deg. C	25.0	25.0	25.5	25.5	25.0
pH, units	5.55	5.56	5.60	5.55	5.62
Specific Conductivity	90	~~[illegible]~~ 88	90	90	92
~~Turbidity (@ 25 Deg. C)~~ TURB	34.7	44.9	44.4	43.2	40.2
Oxidation - Reduction, +/- mv					
Dissolved Oxygen, ppm					

Sample Collection Requirements (✓ If Required at this Location)

Analytical Parameter	✓ If Field Filtered	Preservation Method	Volume Required	✓ If Sample Collected	Sample Bottle IDs
VOA		HCL		✓	/ / /
SVOA		4°C		✓	/ / /
Pest/PCB		4°C		✓	/ / /
Inorganics		HNO_3		✓	/ / /
Explosives		4°C		✓	/ / /
TPH		H_2SO_4			/ / /
TOC		H_2SO_4			/ / /
Nitrate		H_2SO_4			/ / /

Notes: ___

Project: BRAC NTC	**Site:** S.A. 39	**Boring ID:** OLD-39-05
Client: SOUTHDIVNAVFACENGCOM		**Job No.:** 8519.10

Contractor: GPI		**Date started:** 03/20/98	**Compltd:** 03/20/98
Method: HSA	**Casing Size:** 10 in. OD	**Screen Int.:** 10 ft.	**Protection level:** D
Ground Elev.:	**Type of OVM.:** Porta FID II	**Total depth:** 18Ft.	**Dpth to ∇** 9.5 Ft.
Logged by: WDO	**Material:** PVC		

Depth Ft.	Sample ID (Depth) (Type)	Split Spoon	Recovery	Headspace (ppm)	Soil/Rock Description and comments	Lithologic symbol	Soil class.	Blows/6-in.
	39B00501 0-1' CLP				Sand/limerock			
					Fine SAND with silt, mottled off-white and brown, loose, grades to off-white fine SAND at 2 feet, wet at 9.5 feet, yellow staining at 9.5-10.5 feet		SP	
				0				Posthole
				0				2,4,7,11
5			90%					
				0				5,6,8,9
			70%					
	39B00502 8-10' CLP			0				8,8,7,8
			80%					∇
10				0				5,4,8,10
			90%					
				0	Dark brown silty SAND, slightly cohesive		SM	7,11,14,27
			90%					
				0				14,12,17,21
15			90%					
					Boring terminated at 18 feet bgs			
20								

 ABB ENVIRONMENTAL SERVICES, INC.

DEPARTMENT OF THE NAVY
SOUTHERN DIVISION
NAVAL FACILITIES ENGINEERING COMMAND
2155 EAGLE DR., P. O. BOX 10068
CHARLESTON, S. C. 29411-0068

WELL CONSTRUCTION DETAILS

WELL NUMBER OLO-39-05

DATE OF INSTALLATION 3/20/92

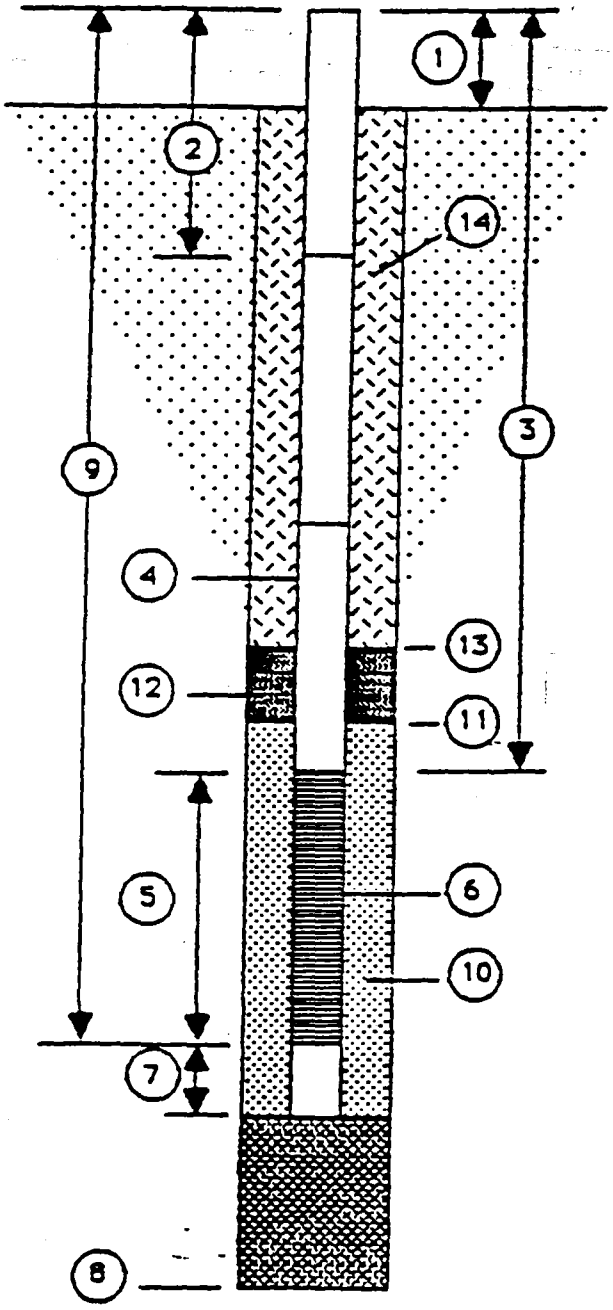

1. Height of Casing above ground Flush
2. Depth to first Coupling 6' BLS
   Coupling Interval Depths 6', 16'
3. Total Length of Blank Pipe 6'
4. Type of Blank Pipe Schedule 40 PVC
5. Length of Screen 10'
6. Type of Screen 0.010 Slot Screen
7. Length of Sump 6"
8. Total Depth of Boring 16.5' Hole Diameter 8"
9. Depth To Bottom of Screen 16'
10. Type of Screen Filter 20/30 Silica Sand
    Quantity Used 500 lb Size 20/30 U/C
11. Depth To Top of Filter 3' 3-6' 30/65 Sand
12. Type of Seal Bentonite
    Quantity Used
13. Depth To Top of Seal 2'
14. Type of Grout Portland
    Grout Mixture Bentonite
    Method of Placement Pour

COMMENTS ON INSTALLATION:

GROUNDWATER SAMPLE FIELD DATA

Project: NTC ORLANDO
Point of Interest: SA39
Project Number: 08519.10
Date: 4-3-96
Sample Location ID: OLD-39-05
Time: Start: 0829 End: 1004
Signature of Sampler: JMN

Water Level/Well Data

Well Depth 14.64 Ft. — X Measured / ___ Historical

X Top of Well / ___ Top of Protective Casing / ___ ___

Well Riser Stick-up (from ground) FM Ft.

Protective Casing/Well Difference NA Ft.

Protective Casing NA Ft.

Depth to Water 8.82 Ft.

Well Material: X PVC / ___ SS / ___

Well Locked?: X Yes / ___ No

Well Dia. X 2 inch / ___ 4 inch / ___ 6 inch / ___ ___

Water Level Equip. Used: X Elect. Cond. Probe / ___ Float Activated / ___ Press. Transducer / ___ ___

Height of Water Column 5.82 Ft. X

X .16 Gal/Ft. (2 in.) / ___ .65 Gal/Ft. (4 in.) / ___ 1.5 Gal/Ft. (6 in.) / ___ ___ Gal/Ft. (___ in.)

= 0.93 Gal/Vol

5 Total Gal Purged

Well Integrity:	Yes	No
Prot. Casing Secure	X	
Concrete Collar Intact	X	
Other ___		

Equipment Documentation

Purging/Sampling Equipment Used:

(✓ If Used For) Purging	Sampling		Equipment ID
X	X	Peristaltic Pump	
		Submersible Pump	
		Bailer	
		PVC/Silicon Tubing	
X	X	Teflon/~~Silicon~~ Tubing	
		Airlift	
		Hand Pump	
		In-line Filter	
		Press/Vac Filter	

Decontamination Fluids Used:

(✓ All That Apply at Location)

- ___ Methanol (100%)
- ___ 25% Methanol/75% ASTM Type II water
- X Deionized Water
- ___ Liquinox Solution
- ___ Hexane
- ___ HNO_3/D.I. Water Solution
- ___ Potable Water
- ___ None
- ___ ___
- ___ ___

Field Analysis Data

Ambient Air VOC Ø ppm Well Mouth Ø ppm

Field Data Collected ___ In-line / X In Container

Sample Observations: ___ Turbid / ___ Colored / ___ Clear / ___ Odor / ___ Cloudy

Purge Data	@ Ø Gal.	@ 3.5 Gal.	@ 4.0 Gal.	@ 4.5 Gal.	@ 5 Gal.
Temperature, Deg. C	21.5	21.5	21.5	21.5	21.5
pH, units	6.51	6.36	6.44	6.45	6.45
Specific Conductivity	242	264	289	289	289
TURB ~~(mmhos/cm. @ 25 Deg. C.)~~	28.5	33.8	33.9	32.7	31.0
Oxidation - Reduction, +/- mv					
Dissolved Oxygen, ppm					

Sample Collection Requirements

(✓ If Required at this Location)

Analytical Parameter	✓ If Field Filtered	Preservation Method	Volume Required	✓ If Sample Collected	Sample Bottle IDs
VOA		HCL		✓	/ / /
SVOA		4OC		✓	/ / /
Pest/PCB		4OC		✓	/ / /
Inorganics		HNO_3		X	/ / /
Explosives		4°C		X	/ / /
TPH		H_2SO_4			/ / /
TOC		H_2SO_4			/ / /
Nitrate		H_2SO_4			/ / /

Notes: ___

Project: BRAC NTC		**Site:** S.A. 39	**Boring ID:** OLD-39-06
Client: SOUTHDIVNAVFACENGCOM			**Job No.:** 8519.10
Contractor: ABB-ES		**Date started:** 04/22/96	**Compltd:** 04/22/96
Method: Hand Auger	**Casing Size:** 4 in.	**Screen Int.:** 5 ft.	**Protection level:** D
Ground Elev.:	**Type of OVM.:** Porta FID II	**Total depth:** 9Ft.	**Dpth to ▽** 6 Ft.
Logged by: WDO	**Material:** PVC		

Depth Ft.	Sample ID (Depth) (Type)	Split Spoon	Recovery	Headspace (ppm)	Soil/Rock Description and comments	Lithologic symbol	Soil class.	Blows/6-in.
					Fine SAND, brown		SP	
				0				NA
				0				
5				0				
				0				
				0	Boring terminated at 9 feet bgs			
10								

 ABB ENVIRONMENTAL SERVICES, INC.

GROUNDWATER SAMPLE FIELD DATA

Project: NTC ORLAND
Point of Interest: SA39
Project Number: 08519.10
Date: 4-23-96
Sample Location ID: OLD-39-06 (TW)
Time: Start: 0913 End: 1010
Signature of Sampler: JMN

Water Level/Well Data

Well Depth 10.44 Ft. — X Measured ___ Historical — X Top of Well ___ Top of Protective Casing ___

Well Riser Stick-up (from ground) 1.5 Ft. — Protective Casing/Well Difference NA Ft. — Protective Casing NA Ft.

Depth to Water 7.81 Ft. — Well Material: X PVC ___ SS ___ — Well Locked?: X Yes ___ No — Well Dia. X 2 inch ___ 4 inch ___ 6 inch ___ — Water Level Equip. Used: X Elect. Cond. Probe ___ Float Activated ___ Press. Transducer ___

Height of Water Column 2.63 Ft. X — X .16 Gal/Ft. (2 in.) ___ .65 Gal/Ft. (4 in.) ___ 1.5 Gal/Ft. (6 in.) ___ Gal/Ft. (__ in.) — = 0.42 Gal/Vol; 3 Total Gal Purged

Well Integrity: Prot. Casing Secure NA; Concrete Collar Intact NA; Other ___ — Yes ___ No ___

Equipment Documentation

Purging/Sampling Equipment Used:

(✓ If Used For) Purging	Sampling		Equipment ID
X	X	Peristaltic Pump	
		Submersible Pump	
		Bailer	
		PVC/Silicon Tubing	
X	X	Teflon/~~Silicone~~ Tubing	
		Airlift	
		Hand Pump	
		In-line Filter	
		Press/Vac Filter	

Decontamination Fluids Used:

(✓ All That Apply at Location)
- ___ Methanol (100%)
- ___ 25% Methanol/75% ASTM Type II water
- X Deionized Water
- ___ Liquinox Solution
- ___ Hexane
- ___ HNO_3/D.I. Water Solution
- ___ Potable Water
- ___ None

Field Analysis Data

Ambient Air VOC Ø ppm Well Mouth Ø ppm Field Data Collected ___ In-line X In Container

Sample Observations: ___ Turbid X Clear ___ Cloudy ___ Colored ___ Odor

Purge Data	@ 6.5 Gal.	@ 1.5 Gal.	@ 2.0 Gal.	@ 2.5 Gal.	@ 3.0 Gal.
Temperature, Deg. C	6.97	6.87	7.08	7.08	7.07
pH, units	22.5	24.5	24.5	24.5	24.5
Specific Conductivity	685	750	750	710	750
~~Turbidity (@ 25 deg. C)~~ TURB	7200	46.1	8.87	4.52	2.54
Oxidation - Reduction, +/- mv					
Dissolved Oxygen, ppm					

Sample Collection Requirements

(✓ If Required at this Location)

Analytical Parameter	✓ If Field Filtered	Preservation Method	Volume Required	✓ If Sample Collected	Sample Bottle IDs
VOA		HCL			/ / /
SVOA		4°C			/ / /
Pest/PCB		4°C			/ / /
Inorganics		HNO_3			/ / /
Explosives		4°C			/ / /
TPH		H_2SO_4			/ / /
TOC		H_2SO_4			/ / /
Nitrate		H_2SO_4			/ / /

Notes: Herbicides only

SOIL BORING LOG

Point of Interest: SA-39			
Boring No.: OLD-39-076			
Client: –	Project No. 8519.10	Protection: D	
Contractor: G. P.	Date Started: 11/21/96	Completed: 11/21/96	
Method: SPT	Casing Size: NA	PI Meter: –	
Ground Elev.: NA	Soil Drilled: NA	Total Depth: 80'	
Logged by: J. MASH	Checked by: PEM	▽ Below Ground: 10'	
Screen: 27 – (ft.)	Riser: 0 – (ft.)	Diam: 2" (ID)	Material: PVC
Page 1 of: 2			

32' BLS 27' BLS

DEPTH (FT)	SAMPLE NUMBER	SAMPLE DEPTH	CLPS/SCREENING	RECOVERY	PID (ppm)	SOIL/ROCK DESCRIPTION	SOIL CLASS	BLOWS/6-IN.	WELL DATA	LITHOLOGY	ELEVATION (FT.)
5						BEGIN SPT AT BASE OF EXISTING WELL OLD-39-03 (16' BLS)					
▽ 10											
15											
					ϕ	DK BROWN SILTY FINE-GRAINED SAND.					15/17/21
20											18/21/24/26
											10/12/21/30
							SP				15/16/24/30
25											44/50+
											32/41/36/50
WELL SCREEN 30											30/50+
						BROWN, CLAYEY SILTY FINE-GRAINED SAND. FEW LENSES OF SANDY CLAY.	SM/CL				25/22/25/24
35											9/13/16/14
						CLAY STIFF, DK. GREEN.					9/12/16/18
						TAN, FINE TO MEDIUM-GRAINED SAND. ~~SILTY~~	SP				6/18/14/15
40											10/18/15/15
											3/3/8/19
						OLIVE-GREEN SILTY, FINE TO COARSE-GRAINED SAND					6/10/14/17
45											3/4/4/7
							SP				4/6/8/18
50						(HAWTHORN ?)					6/7/16/8

PROPORTIONS	(-) AMOUNT (-)	ABBREVIATIONS		
Trace (tr)	0-10%	f = fine	gr = gray	MS = Split Spoon
Little (li)	10-20%	m = medium	bn = brown	SW = Screened Auger
Some (so)	20-35%	c = coarse	blk = black	HP = Hydropunch
and	35-50%			

SOIL BORING LOG

		Point of Interest: CID-39-07B
		Boring No.:
Client:	Project No.:	Protection:
Contractor:	Date Started:	Completed:
Method:	Casing Size:	PI Meter:
Ground Elev.:	Soil Drilled:	Total Depth:
Logged by:	Checked by:	▽ Below Ground:
Screen: (ft.)	Riser: (ft.) / Diam: (ID) / Material:	Page 2 of: 2

DEPTH (FT)	SAMPLE NUMBER	SAMPLE DEPTH	CLP/SCHEDULED	RECOVERY	PID (ppm)	SOIL/ROCK DESCRIPTION	SOIL CLASS	BLOWS/6-IN.	WELL DATA	LITHOLOGY	ELEVATION (FT.)
50					0						1/1/2/3
											1/1/1/5
55						AS ABOVE.					4/4/10/14
											4/4/10/24
60											10/24/35/35
											8/13/19/20
65											34/34/[illegible]
											22/30/4[illegible]
											30/32/34/34
70											45/53+
											13/17/22/2[illegible]
75											23/32/34/4[illegible]
											36/42/34/4[illegible]
											9/14/25/30
80											16/16/16/20
						TD BORING (SPT COLLECTION)					

PROPORTIONS	(-) AMOUNT (+)	ABBREVIATIONS		
Trace (tr)	0-10%	f = fine	gr = gray	MS = Split Spoon
Little (li)	10-20%	m = medium	bn = brown	SW = Screened Auger
Some (so)	20-35%	c = coarse	blk = black	HP = Hydropunch
and	35-50%			

DEPARTMENT OF THE NAVY
SOUTHERN DIVISION
NAVAL FACILITIES ENGINEERING COMMAND
2155 EAGLE DR., P. O. BOX 10068
CHARLESTON, S. C. 29411-0068

WELL CONSTRUCTION DETAILS

WELL NUMBER OCD-39-07B

DATE OF INSTALLATION 11/21/96

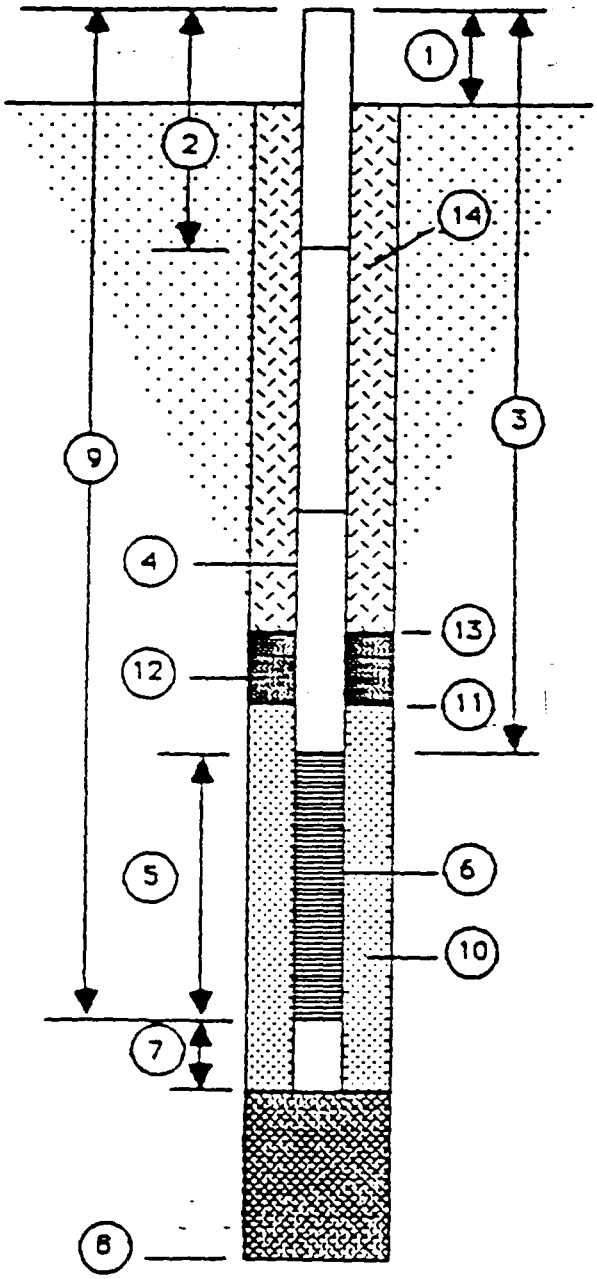

1. Height of Casing above ground FLUSH
2. Depth to first Coupling 7' BGS

   Coupling Interval Depths 7, 17, 27
3. Total Length of Blank Pipe 27'
4. Type of Blank Pipe PVC
5. Length of Screen 5'
6. Type of Screen PVC, .01" SLOT
7. Length of Sump 6"
8. Total Depth of Boring 32.5 Hole Diameter 8"
9. Depth To Bottom of Screen 32'
10. Type of Screen Filter 20/30 SAND

    Quantity Used 400 lb Size 20/30 U/C
11. Depth To Top of Filter 25'
12. Type of Seal BENTONITE

    Quantity Used 100 lb
13. Depth To Top of Seal 23
14. Type of Grout PORTLAND

    Grout Mixture BENTONITE

    Method of Placement TREMIE

COMMENTS ON INSTALLATION: B-SUPPRD W/LOCKING CAP, BOLT-DOWN COVER.

GROUNDWATER SAMPLE FIELD DATA

Project: SA-39 SUPP SCREENING
Project Number: 80TR, 10
Sample Location ID: OLD-39-07B
Time: Start: 0930 End: 1255

Point of Interest: OLD-39-07B
Date: 11/27/96
Signature of Sampler:

Water Level/Well Data

Well Depth 32 Ft. ___ Measured X Historical ___ Top of Well ___ Top of Protective Casing

Well Riser Stick-up (from ground) ___ Ft.

Protective Casing/Well Difference ___ Ft. FLUSH

Protective Casing ___ Ft.

Depth to Water ___ Ft. 10.62

Well Material: X PVC ___ SS

Well Locked?: X Yes ___ No

Well Dia. X 2 inch ___ 4 inch ___ 6 inch

Water Level Equip. Used: X Elect. Cond. Probe ___ Float Activated ___ Press. Transducer

Height of Water Column 20 Ft. X ___ .16 Gal/Ft. (2 in.) ___ .65 Gal/Ft. (4 in.) ___ 1.5 Gal/Ft. (6 in.) ___ Gal/Ft. (__in.) = 4 Gal/Vol; 19 Total Gal Purged

Well Integrity: Prot. Casing Secure Yes X No ___; Concrete Collar Intact Yes X No ___; Other ___

Equipment Documentation

Purging/Sampling Equipment Used:

(✓ If Used For) Purging	Sampling		Equipment ID
___	X	Peristaltic Pump	NA
___	___	Submersible Pump	
___	___	Bailer	
___	___	PVC/Silicon Tubing	
___	___	Teflon/Silicon Tubing	
___	___	Airlift	
___	___	Hand Pump	
___	___	In-line Filter	
___	___	Press/Vac Filter	

Decontamination Fluids Used: (✓ All That Apply at Location)

- ___ Methanol (100%)
- ___ 25% Methanol/75% ASTM Type II water
- ___ Deionized Water
- ___ Liquinox Solution
- ___ Hexane
- ___ HNO_3/D.I. Water Solution
- ___ Potable Water
- ___ None
- X NEW TUBING

Field Analysis Data

Ambient Air VOC 0 ppm Well Mouth 0 ppm Field Data Collected ___ In-line X In Container

Sample Observations: X Turbid ___ Colored ___ Clear ___ Odor ___ Cloudy

Purge Data	@ INITIAL Gal.	@ 5 Gal.	@ 8 Gal.	@ 10 Gal.	@ 14 Gal.	16	19
Temperature, Deg. C	22	23	23	24	25	24	24
pH, units	5.65	6.01	5.65	5.64	5.54	5.69	5.47
Specific Conductivity (umhos/cm. @ 25 Deg. C.)	209	180	168	168	147	138	139
Oxidation - Reduction, +/- mv							
~~Dissolved Oxygen, ppm~~ TURB	7200	7200	7200	7200	7200	7200	7200

Sample Collection Requirements (✓ If Required at this Location)

Analytical Parameter	✓ If Field Filtered	Preservation Method	Volume Required	✓ If Sample Collected	Sample Bottle IDs
VOA	___	HCL	___	___	___ / ___ / ___ / ___
SVOA	___	4OC	___	___	___ / ___ / ___ / ___
Pest/PCB	___	4OC	___	___	___ / ___ / ___ / ___
Inorganics	___	HNO_3	___	___	___ / ___ / ___ / ___
Explosives	___	4°C	___	___	___ / ___ / ___ / ___
TPH	___	H_2SO_4	___	___	___ / ___ / ___ / ___
TOC	___	H_2SO_4	___	___	___ / ___ / ___ / ___
Nitrate	___	H_2SO_4	___	___	___ / ___ / ___ / ___

Notes: COLLECT 3X 40 ML VIALS ANALYZED FOR TOA 524.2

GROUNDWATER SAMPLE FIELD DATA

Project: NTC ORLANDO
Point of Interest: SA 39
Project Number: 08545.10
Date: 5-15/97
Sample Location ID: OLD-39-073
Time: Start: 1555 End: 1800
Signature of Sampler: [signature]

Water Level/Well Data

Well Depth 31.70 Ft. — X Measured / ___ Historical — X Top of Well / ___ Top of Protective Casing

Well Riser Stick-up (from ground) NA Ft.

Protective Casing/Well Difference NA Ft.

Protective Casing NA Ft.

Depth to Water 12.69 Ft.

Well Material: X PVC / ___ SS

Well Locked?: X Yes / ___ No

Well Dia. X 2 inch / ___ 4 inch / ___ 6 inch

Water Level Equip. Used: X Elect. Cond. Probe / ___ Float Activated / ___ Press. Transducer

Height of Water Column 19.01 Ft. X X .16 Gal/Ft. (2 in.) / ___ .65 Gal/Ft. (4 in.) / ___ 1.5 Gal/Ft. (6 in.) / ___ Gal/Ft. (___ in.) = 3.04 Gal/Vol; 8 Total Gal Purged

Well Integrity: Yes ___ No ___
Prot. Casing Secure ___ ___
Concrete Collar Intact NA ___ ___
Other ___ ___ ___

Equipment Documentation

Purging/Sampling Equipment Used:

(✓ If Used For) Purging	Sampling		Equipment ID
X	X	Peristaltic Pump	
___	___	Submersible Pump	
___	___	Bailer	
___	___	PVC/Silicon Tubing	
X	X	Teflon/Silicon Tubing	
___	___	Airlift	
___	___	Hand Pump	
___	___	In-line Filter	
___	___	Press/Vac Filter	
___	___		

Decontamination Fluids Used: (✓ All That Apply at Location)

___ Methanol (100%)
___ 25% Methanol/75% ASTM Type II water
X Deionized Water
___ Liquinox Solution
___ Hexane
___ HNO_3/D.I. Water Solution
___ Potable Water
___ None

Field Analysis Data

Ambient Air VOC Ø ppm Well Mouth Ø ppm Field Data Collected ___ In-line / X In Container

Sample Observations: X Turbid / ___ Colored / ___ Clear / ___ Odor / ___ Cloudy

Purge Data	@ 2.5 Gal.	@ 5 Gal.	@ 7 Gal.	@ 7.5 Gal.	@ 8 Gal.
Temperature, Deg. C	26.9	26.6	25.7	25.4	25.2
pH, units	5.06	5.24	5.21	5.25	5.22
Specific Conductivity	75	85	80	85	80
~~(umhos/cm @ 25 Deg. C)~~ NTU	67.0	62.5	63.6	62.2	64.9
Oxidation - Reduction, +/- mv	—	—	—	—	32.8
Dissolved Oxygen, ~~ppm~~ mg/l	—	—	—	—	0.7

H_2S - 2.0 mg/l
CL - 0.15 mg/l
Fe 0.6 mg/l
Fe^{2+} 0.5 mg/l
ALK (Ph) Ø
ALK = 20.4 mg
CO_2 50 mg/l

Sample Collection Requirements (✓ If Required at this Location)

Analytical Parameter	✓ If Field Filtered	Preservation Method	Volume Required	✓ If Sample Collected	Sample Bottle IDs
VOA	___	HCL	___	___	___/___/___/___
SVOA	___	4°C	___	___	___/___/___/___
Pest/PCB	___	4°C	___	___	___/___/___/___
Inorganics	___	HNO_3	___	___	___/___/___/___
Explosives	___	4°C	___	___	___/___/___/___
TPH	___	H_2SO_4	___	___	___/___/___/___
TOC	___	H_2SO_4	___	___	___/___/___/___
Nitrate	___	H_2SO_4	___	___	___/___/___/___

Notes: ___

DEPARTMENT OF THE NAVY
SOUTHERN DIVISION
NAVAL FACILITIES ENGINEERING COMMAND
2155 EAGLE DR., P. O. BOX 10068
CHARLESTON, S. C. 29411-0068

WELL CONSTRUCTION DETAILS

WELL NUMBER OCD-39-08 *

DATE OF INSTALLATION 11/25/96

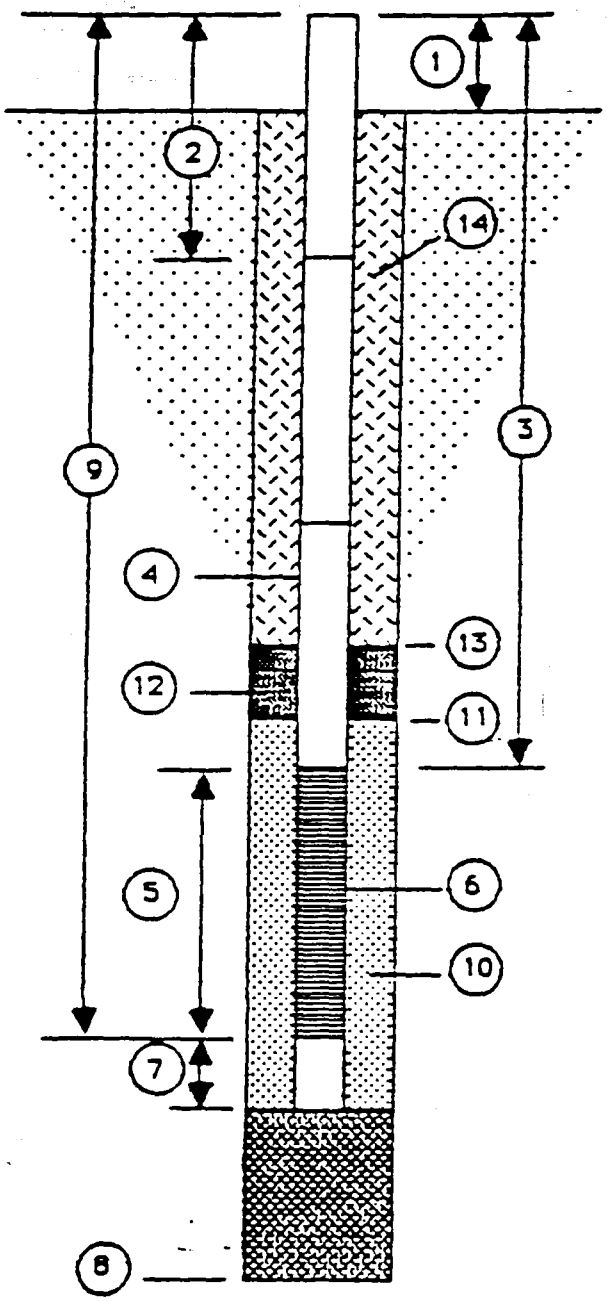

1. Height of Casing above ground FLUSH
2. Depth to first Coupling 2'

   Coupling Interval Depths 2, 5, 8, 11, 14
3. Total Length of Blank Pipe 8'
4. Type of Blank Pipe 1/2" DIA PVC
5. Length of Screen 9'
6. Type of Screen 1/2" PVC, .01" SLOT
7. Length of Sump –
8. Total Depth of Boring 17 Hole Diameter 2"
9. Depth To Bottom of Screen 17'
10. Type of Screen Filter 20/40 SAND

    Quantity Used – Size – U/C –
11. Depth To Top of Filter 8'
12. Type of Seal BENTONITE

    Quantity Used 1 lb
13. Depth To Top of Seal 7'
14. Type of Grout CONCRETE

    Grout Mixture

    Method of Placement POUR

COMMENTS ON INSTALLATION: * WELL INSTALLED AS MICRO-WELL W/ TRIAPROBE - EQUIPPED W/ LOCKING CAP, 8" BAN-HOLE AND COVER.

GROUNDWATER SAMPLE FIELD DATA

Project: JA 39 SUPPLEMENTAL SCREEN Point of Interest: GED-39-03
Project Number: 8579.10 Date: 11/26/96
Sample Location ID: JA 39
Time: Start: 1026 End: 1120 Signature of Sampler:

Water Level/Well Data

Well Depth 17 Ft. ___ Measured ✗ Historical ___ Top of Well ___ Top of Protective Casing ___ Well Riser Stick-up (from ground) ___ Ft. Protective Casing/Well Difference ___ Ft. FLUSH

Protective Casing ___ Ft.

Depth to Water 10 Ft. Well Material: ✗ PVC ___ SS Well Locked?: ✗ Yes ___ No Well Dia. 1/2" ___ 2 inch ___ 4 inch ___ 6 inch Water Level Equip. Used: ___ Elect. Cond. Probe ___ Float Activated ___ Press. Transducer ✗ NA

Height of Water Column 7 Ft. X ___ .16 Gal/Ft. (2 in.) ___ .65 Gal/Ft. (4 in.) ___ 1.5 Gal/Ft. (6 in.) ___ Gal/Ft. (___ in.) = ≈1 Gal/Vol; 5 Total Gal Purged

Well Integrity:	Yes	No
Prot. Casing Secure	___	___
Concrete Collar Intact	___	___
Other ___	___	___

Equipment Documentation

Purging/Sampling Equipment Used:

(✓ If Used For) Purging	Sampling		Equipment ID
___	✗	Peristaltic Pump	NA
___	___	Submersible Pump	
___	___	Bailer	
___	___	PVC/Silicon Tubing	
___	___	Teflon/Silicon Tubing	
___	___	Airlift	
___	___	Hand Pump	
___	___	In-line Filter	
___	___	Press/Vac Filter	

Decontamination Fluids Used:

(✓ All That Apply at Location)
___ Methanol (100%)
___ 25% Methanol/75% ASTM Type II water
___ Deionized Water
___ Liquinox Solution
___ Hexane
___ HNO_3/D.I. Water Solution
___ Potable Water
___ None

NEW TUBING

Field Analysis Data

Ambient Air VOC 0 ppm Well Mouth 0 ppm Field Data Collected ___ In-line ✗ In Container

Sample Observations: ✗ Turbid ___ Clear ___ Cloudy ___ Colored ___ Odor

Purge Data	@ 1 Gal. 1026	@ 2 Gal. 1035	@ 3 Gal.	@ 4 Gal.	@ 5 Gal.
Temperature, Deg. C	22	22	21.5	21.5	22
pH, units	5.8	6.59	6.42	6.41	6.44
Specific Conductivity (umhos/cm. @ 25 Deg. C)	140	186	141	198	200
Oxidation - Reduction, +/- mv					
Dissolved Oxygen, ppm					
TURB	520	7200	7200	185	166.4

Sample Collection Requirements (✓ If Required at this Location)

Analytical Parameter	✓ If Field Filtered	Preservation Method	Volume Required	✓ If Sample Collected	Sample Bottle IDs
VOA	___	HCL	___	___	___/___/___/___
SVOA	___	4OC	___	___	___/___/___/___
Pest/PCB	___	4OC	___	___	___/___/___/___
Inorganics	___	HNO_3	___	___	___/___/___/___
Explosives	___	4°C	___	___	___/___/___/___
TPH	___	H_2SO_4	___	___	___/___/___/___
TOC	___	H_2SO_4	___	___	___/___/___/___
Nitrate	___	H_2SO_4	___	___	___/___/___/___

Notes: 3-40 ML VIALS FOR 524.2 ANALYSIS

DEPARTMENT OF THE NAVY
SOUTHERN DIVISION
NAVAL FACILITIES ENGINEERING COMMAND
2155 EAGLE DR., P. O. BOX 10068
CHARLESTON, S. C. 29411-0068

WELL CONSTRUCTION DETAILS

WELL NUMBER OLD-39-09*

DATE OF INSTALLATION 11/25/96

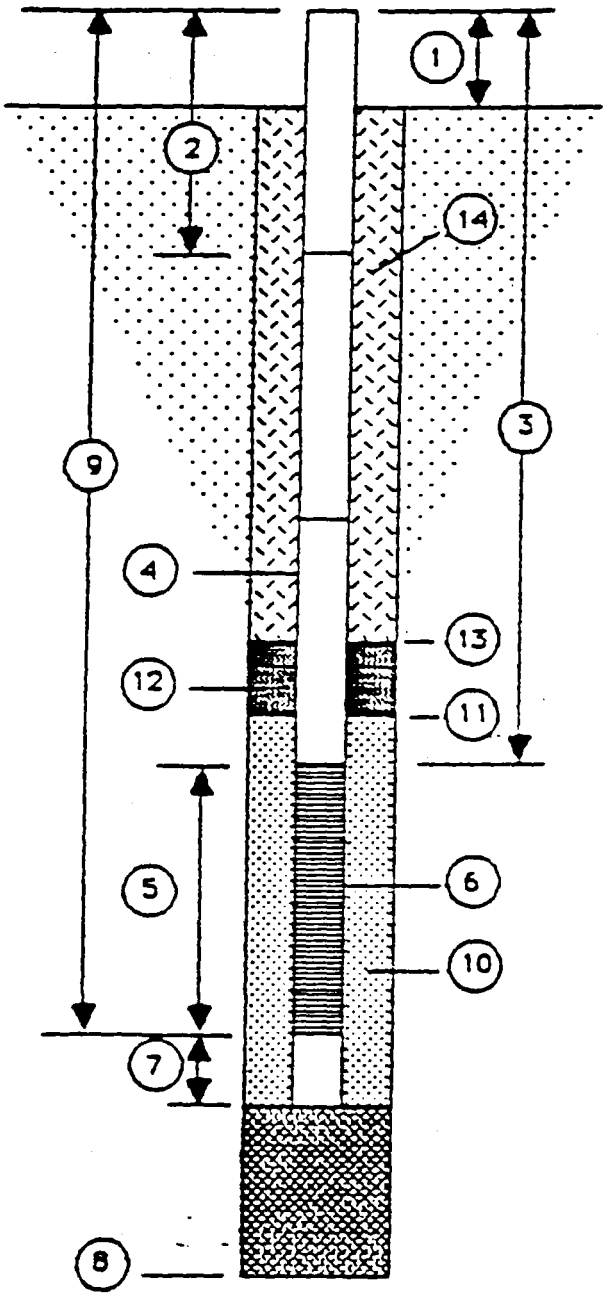

1. Height of Casing above ground FLUSH
2. Depth to first Coupling 2'

   Coupling Interval Depths 2, 5, 8, 11, 14
3. Total Length of Blank Pipe 8'
4. Type of Blank Pipe 1/2" DIA PVC
5. Length of Screen 9'
6. Type of Screen 1/2" PVC .01 SLOT
7. Length of Sump —
8. Total Depth of Boring 17' Hole Diameter 2"
9. Depth To Bottom of Screen 17'
10. Type of Screen Filter 20/40 SAND

    Quantity Used — Size — U/C —
11. Depth To Top of Filter 8'
12. Type of Seal BENTONITE

    Quantity Used 1 lb
13. Depth To Top of Seal 7'
14. Type of Grout CONCRETE

    Grout Mixture

    Method of Placement POUR

COMMENTS ON INSTALLATION: INSTALLED AS MICRO-WELL W/TIBRAPROBE. EQUIPPED W/LOCKING CAP, 8" MAN-HOLE AND COVER.

GROUNDWATER SAMPLE FIELD DATA

Project: SA-39 SUP. SCREENING
Point of Interest: SA-39
Project Number: 8579-10
Date: 11/26/96
Sample Location ID: OED-39-09
Time: Start: 1146 End: 1304
Signature of Sampler:

Water Level/Well Data

Well Depth 17' Ft. ___ Measured X Historical
___ Top of Well ___ Top of Protective Casing
Well Riser Stick-up ___ Ft. (from ground)
Protective ___ Ft. Casing/Well Difference FLUSH
Protective ___ Ft. Casing

Depth to Water 4.10' Ft.
Well Material: X PVC ___ SS
Well Locked?: X Yes ___ No
Well Dia. 1/2" ___ 2 inch ___ 4 inch ___ 6 inch
Water Level Equip. Used: ___ Elect. Cond. Probe ___ Float Activated ___ Press. Transducer X N/A

Height of Water Column 7 Ft. X ___ .16 Gal/Ft. (2 in.) ___ .65 Gal/Ft. (4 in.) ___ 1.5 Gal/Ft. (6 in.) ___ Gal/Ft. (___ in.) = [≈1 Gal/Vol; 5 Total Gal Purged]

Well Integrity:	Yes	No
Prot. Casing Secure		
Concrete Collar Intact		
Other		

Equipment Documentation

Purging/Sampling Equipment Used:

(✓ If Used For) Purging	Sampling		Equipment ID
	X	Peristaltic Pump	NA
		Submersible Pump	
		Bailer	
		PVC/Silicon Tubing	
		Teflon/Silicon Tubing	
		Airlift	
		Hand Pump	
		In-line Filter	
		Press/Vac Filter	

Decontamination Fluids Used: (✓ All That Apply at Location)
___ Methanol (100%)
___ 25% Methanol/75% ASTM Type II water
___ Deionized Water
___ Liquinox Solution
___ Hexane
___ HNO_3/D.I. Water Solution
___ Potable Water
___ None

NEW TUBING

Field Analysis Data

Ambient Air VOC 0 ppm Well Mouth 0 ppm Field Data Collected ___ In-line X In Container
Sample Observations: X Turbid ___ Colored ___ Clear ___ Odor ___ Cloudy

Purge Data	@ 1 Gal.	@ 2 Gal.	@ 3 Gal.	@ 4 Gal.	@ 5 Gal.	6
Temperature, Deg. C	22	22.5	22	22.5	22	23
pH, units	6.33	6.35	6.63	6.87	6.87	6.83
Specific Conductivity (umhos/cm. @ 25 Deg. C)	420	410	343			
Oxidation - Reduction, +/- mv						
~~Dissolved Oxygen, ppm~~ TURB	7200	7200	7200	7200	7200	7200

Sample Collection Requirements (✓ If Required at this Location)

Analytical Parameter	✓ If Field Filtered	Preservation Method	Volume Required	✓ If Sample Collected	Sample Bottle IDs
VOA		HCL			/ / /
SVOA		4OC			/ / /
Pest/PCB		4OC			/ / /
Inorganics		HNO_3			/ / /
Explosives		4°C			/ / /
TPH		H_2SO_4			/ / /
TOC		H_2SO_4			/ / /
Nitrate		H_2SO_4			/ / /

Notes: 3 x 40 ML VIALS; ANALYZED FOR VOA

DEPARTMENT OF THE NAVY
SOUTHERN DIVISION
NAVAL FACILITIES ENGINEERING COMMAND
2155 EAGLE DR., P. O. BOX 10068
CHARLESTON, S. C. 29411-0068

WELL CONSTRUCTION DETAILS

WELL NUMBER OCD-39-10+

DATE OF INSTALLATION 11/25/91

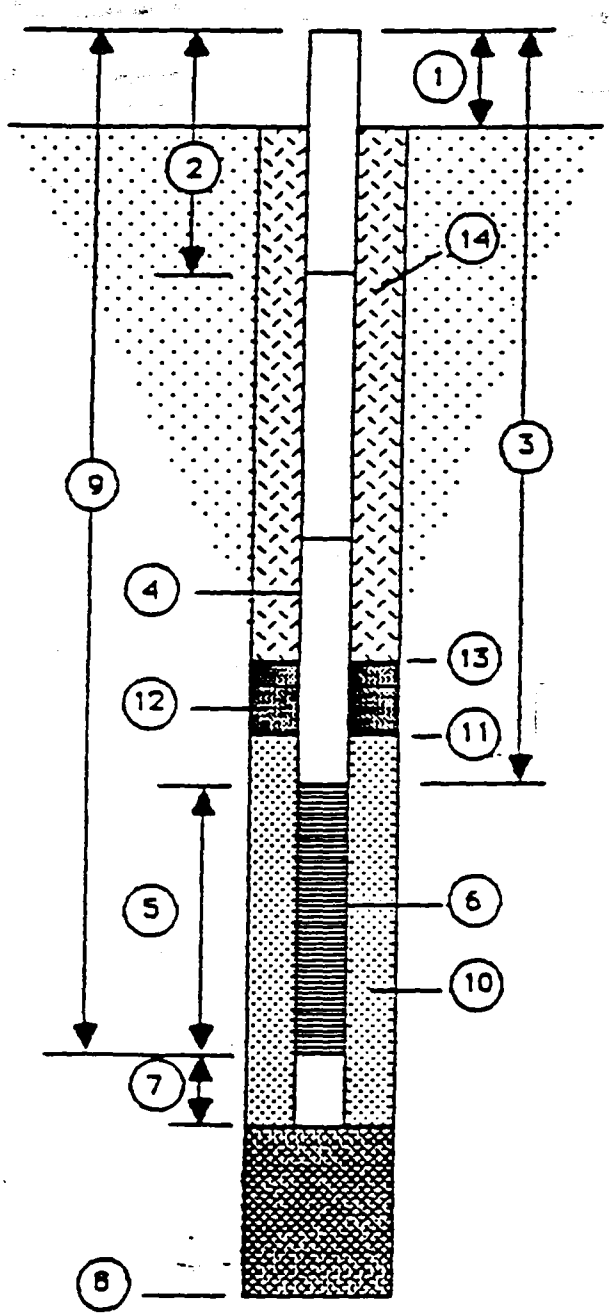

1. Height of Casing above ground FLUSH
2. Depth to first Coupling 2"

   Coupling Interval Depths 2, 5, 8, 11, 14
3. Total Length of Blank Pipe 8'
4. Type of Blank Pipe 1/2" DIA PVC
5. Length of Screen 9'
6. Type of Screen 1/2 PVC, .01 SLOT
7. Length of Sump —
8. Total Depth of Boring 17' Hole Diameter 2"
9. Depth To Bottom of Screen 17
10. Type of Screen Filter 20/40 SAND

    Quantity Used — Size — U/C —
11. Depth To Top of Filter 8'
12. Type of Seal BENTONITE

    Quantity Used 1 lb
13. Depth To Top of Seal 7'
14. Type of Grout CONCRETE

    Grout Mixture

    Method of Placement POUR

COMMENTS ON INSTALLATION: + WELL INSTALLED AS MICRO-WELL W/ TRAFFICABLE EQUIPPED W/ LOCKING CAP, 8" MAN-HOLE AND COVER.

GROUNDWATER SAMPLE FIELD DATA

Project: SA-39 SUMP SCARIFYING
Point of Interest:
Project Number: 8519.10
Date: 11/25/96
Sample Location ID: SA-39 / OCD-39-10
Time: Start: 1347 End: 1420
Signature of Sampler:

Water Level/Well Data

Well Depth 17 Ft. ___ Measured X Historical
___ Top of Well ___ Top of Protective Casing
Well Riser Stick-up ___ Ft. (from ground)
Protective Casing/Well Difference FLUSH
Protective Casing ___ Ft.

Depth to Water 10 Ft.
Well Material: X PVC ___ SS
Well Locked?: X Yes ___ No
Well Dia. 1/2" ___ 2 inch ___ 4 inch ___ 6 inch
Water Level Equip. Used: ___ Elect. Cond. Probe ___ Float Activated ___ Press. Transducer X N/A

Height of Water Column 7 Ft. X ___ .16 Gal/Ft. (2 in.) ___ .65 Gal/Ft. (4 in.) ___ 1.5 Gal/Ft. (6 in.) ___ Gal/Ft. (___ in.) = 1 Gal/Vol; 4 Total Gal Purged

Well Integrity: Yes / No
Prot. Casing Secure
Concrete Collar Intact
Other

Equipment Documentation

Purging/Sampling Equipment Used:

(✓ If Used For) Purging	Sampling		Equipment ID
	X	Peristaltic Pump	N/A
		Submersible Pump	
		Bailer	
		PVC/Silicon Tubing	
		Teflon/Silicon Tubing	
		Airlift	
		Hand Pump	
		In-line Filter	
		Press/Vac Filter	

Decontamination Fluids Used: (✓ All That Apply at Location)
___ Methanol (100%)
___ 25% Methanol/75% ASTM Type II water
___ Deionized Water
___ Liquinox Solution
___ Hexane
___ HNO_3/D.I. Water Solution
___ Potable Water
___ None

NEW TUBING

Field Analysis Data

Ambient Air VOC 0 ppm Well Mouth 0 ppm Field Data Collected ___ In-line X In Container
Sample Observations: X Turbid ___ Clear ___ Cloudy ___ Colored ___ Odor

Purge Data	@ 1 Gal.	@ 2 Gal.	@ 3 Gal.	@ 4 Gal.	@ ___ Gal.
Temperature, Deg. C	23.5	24	24	24	
pH, units	5.71	5.88	5.66	5.57	
Specific Conductivity (umhos/cm. @ 25 Deg. C.)	173	173	169	167	
Oxidation - Reduction, +/- mv					
~~Dissolved Oxygen, ppm~~ TURB	>200	>200	>200	>200	

Sample Collection Requirements (✓ If Required at this Location)

Analytical Parameter	✓ If Field Filtered	Preservation Method	Volume Required	✓ If Sample Collected	Sample Bottle IDs
VOA		HCL			/ / /
SVOA		4°C			/ / /
Pest/PCB		4°C			/ / /
Inorganics		HNO_3			/ / /
Explosives		4°C			/ / /
TPH		H_2SO_4			/ / /
TOC		H_2SO_4			/ / /
Nitrate		H_2SO_4			/ / /

Notes: 3 X 40 MIL VIALS ANALYZED FOR BPA 524.2

DEPARTMENT OF THE NAVY
SOUTHERN DIVISION
NAVAL FACILITIES ENGINEERING COMMAND
2155 EAGLE DR., P. O. BOX 10068
CHARLESTON, S. C. 29411-0068

WELL CONSTRUCTION DETAILS

WELL NUMBER CCD-39-15 *

DATE OF INSTALLATION 11/25/96

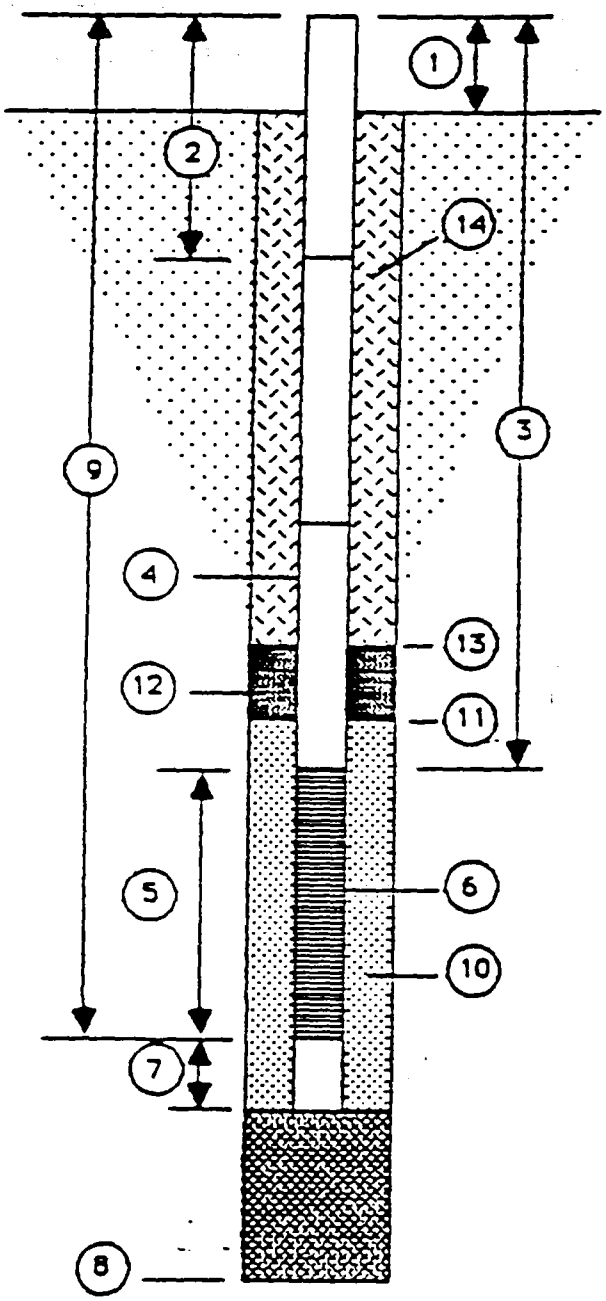

1. Height of Casing above ground FLUSH
2. Depth to first Coupling 2"

   Coupling Interval Depths 2, 5, 8, 11, 14
3. Total Length of Blank Pipe 8'
4. Type of Blank Pipe 1/2" DIA PVC
5. Length of Screen 9'
6. Type of Screen 1/2" PVC, .01 SLOT
7. Length of Sump —
8. Total Depth of Boring 17' Hole Diameter 2"
9. Depth To Bottom of Screen 17'
10. Type of Screen Filter 20/40 SAND

    Quantity Used — Size — U/C —
11. Depth To Top of Filter 8'
12. Type of Seal BENTONITE

    Quantity Used 1 lb
13. Depth To Top of Seal 7'
14. Type of Grout CONCRETE

    Grout Mixture —

    Method of Placement AUR

COMMENTS ON INSTALLATION: WELL INSTALLED AS MICRO-WELL W/ TEMPORARY. EQUIPPED W/ LOCKING CAP, 8" MAN-HOLE AND COVER.

GROUNDWATER SAMPLE FIELD DATA

Project: SA 39 SUPP SCREENING
Point of Interest: OLD-39-11
Project Number: 8579.10
Date: 11/26-96
Sample Location ID: OLD-39-11
Time: Start: 1449 End: 1535
Signature of Sampler:

Water Level/Well Data

Well Depth 17 Ft. — ___ Measured — X Historical — ___ Top of Well — ___ Top of Protective Casing — ___ ___

Well Riser Stick-up (from ground) ___ Ft.

Protective Casing/Well Difference ___ Ft. FLUSH

Protective Casing ___ Ft.

Depth to Water 10 Ft. — Well Material: X PVC, ___ SS — Well Locked?: X Yes, ___ No — Well Dia. 1/2 ___ 2 inch, ___ 4 inch, ___ 6 inch — Water Level Equip. Used: ___ Elect. Cond. Probe, ___ Float Activated, ___ Press. Transducer, X NA

Height of Water Column 7 Ft. X ___ .16 Gal/Ft. (2 in.), ___ .65 Gal/Ft. (4 in.), ___ 1.5 Gal/Ft. (6 in.), ___ Gal/Ft. (___ in.) = 1 Gal/Vol; 6 Total Gal Purged

Well Integrity: Prot. Casing Secure ___ Yes ___ No; Concrete Collar Intact ___ Yes ___ No; Other ___ Yes ___ No

Equipment Documentation

Purging/Sampling Equipment Used:

(✓ If Used For) Purging	Sampling		Equipment ID
	X	Peristaltic Pump	NA
		Submersible Pump	
		Bailer	
		PVC/Silicon Tubing	
		Teflon/Silicon Tubing	
		Airlift	
		Hand Pump	
		In-line Filter	
		Press/Vac Filter	

Decontamination Fluids Used: (✓ All That Apply at Location)

___ Methanol (100%)
___ 25% Methanol/75% ASTM Type II water
___ Deionized Water
___ Liquinox Solution
___ Hexane
___ HNO_3/D.I. Water Solution
___ Potable Water
___ None
X NEW TUBING

Field Analysis Data

Ambient Air VOC 0 ppm Well Mouth 0 ppm Field Data Collected ___ In-line, X In Container

Sample Observations: ___ Turbid, X Clear, ___ Cloudy, ___ Colored, ___ Odor

Purge Data	@ 1 Gal.	@ 2 Gal.	@ 3 Gal.	@ 4 Gal.	@ 5 Gal.	6
Temperature, Deg. C	23.5	23	24	24	24	23
pH, units	6.37	6.26	6.24	6.33	6.26	6.24
Specific Conductivity (umhos/cm @ 25 Deg. C.)	147	149	149	151	149	148
Oxidation - Reduction, +/- mv						
~~Dissolved Oxygen, ppm~~ TURB	>200	>200	124	117	102	94

Sample Collection Requirements (✓ If Required at this Location)

Analytical Parameter	✓ If Field Filtered	Preservation Method	Volume Required	✓ If Sample Collected	Sample Bottle IDs
VOA		HCL			/ / /
SVOA		4OC			/ / /
Pest/PCB		4OC			/ / /
Inorganics		HNO_3			/ / /
Explosives		4°C			/ / /
TPH		H_2SO_4			/ / /
TOC		H_2SO_4			/ / /
Nitrate		H_2SO_4			/ / /

Notes:
3x 40 ML VIALS FOR ANALYSIS FOR BPA 524.2

DEPARTMENT OF THE NAVY

SOUTHERN DIVISION
NAVAL FACILITIES ENGINEERING COMMAND
CHARLESTON, SC.

WELL CONSTRUCTION DETAIL

WELL NUMBER: OLD-39-12 A

DATE OF INSTALLATION: 4-21/97

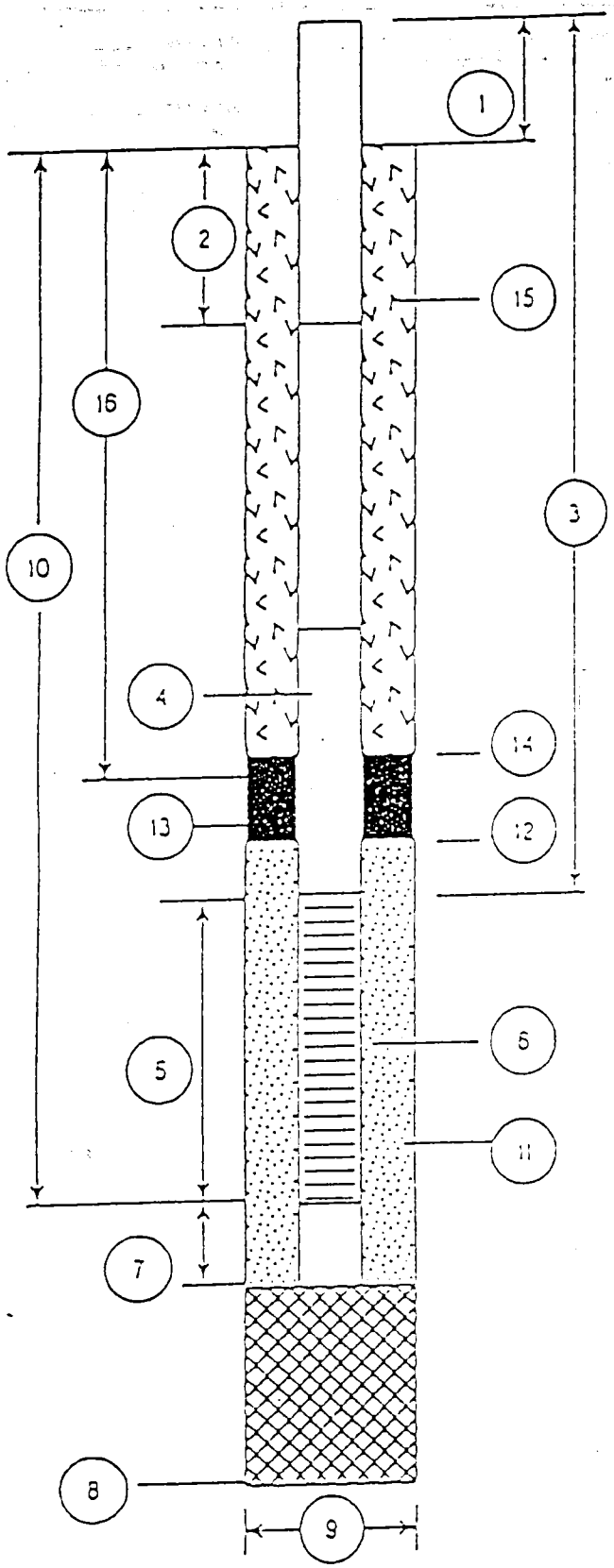

1. Height of Casing above ground: FM
2. Depth to first Coupling: 7'

   Coupling Interval Depths: NA
3. Total Length of Riser Pipe: 7'
4. Type of Riser Pipe: 2" Sched. 40 PVC
5. Length of Screen: 10'
6. Type of Screen: 2" Sched 40 PVC 0.010 slot
7. Length of Sump: 6"
8. Total Depth of Boring: 17.5'
9. Diameter of Boring: 10"
10. Depth to Bottom of Screen: 17'
11. Type of Screen Filter: Silica Sand

    Quantity Used: 400 lb Size: 20/30
12. Depth to Top of Filter: 5'
13. Type of Seal: FINE SAND/bentonite

    Quantity Used: 50 lb/25 lb
14. Depth to Top of Seal: 2'
15. Type of Grout: Neat Cement

    Grout Mixture:

    Method of Placement: Auc
16. Tot. Depth of 6 in. Steel Casing: NA

GROUNDWATER SAMPLE FIELD DATA

Project: NTC ORLANDO
Project Number: 08545.10
Sample Location ID: OLD-39-12A
Time: Start: 1345 End: 1605

Point of Interest: SA 39
Date: 5-13/97
Signature of Sampler: [illegible]

Water Level/Well Data

Well Depth 16.80 ft. X Measured ___ Historical

X Top of Well ___ Top of Protective Casing

Well Riser Stick-up NA ft. (from ground)

Protective NA ft. Casing/Well Difference

Protective NA ft. Casing

Depth to Water 13.38 ft.

Well Material: X PVC ___ SS

Well Locked?: X Yes ___ No

Well Dia. X 2 inch ___ 4 inch ___ 6 inch

Water Level Equip. Used: X Elect. Cond. Probe ___ Float Activated ___ Press. Transducer

Height of Water Column 3.42 ft. X X .16 Gal/ft. (2 in.) ___ .65 Gal/ft. (4 in.) ___ 1.5 Gal/ft. (6 in.) ___ Gal/ft. (__ in.) = 0.55 Gal/Vol ___ Total Gal Purged

Well Integrity: Yes / No
Prot. Casing Secure
Concrete Collar Intact
Other

Equipment Documentation

Purging/Sampling Equipment Used:

(✓ If Used For) Purging	Sampling		Equipment ID
X	X	Peristaltic Pump	
		[illegible]	
		[illegible]	
		[illegible]	
X	X	Teflon/Silicon Tubing	
		Airlift	
		Hand Pump	
		In-line Filter	
		Press/Vac Filter	

Decontamination Fluids Used: (✓ All That Apply at Location)

___ Methanol (100%)
___ [illegible] ASTM Type II Water
___ [illegible] Solution
___ Hexane
___ HNO_3/D.I. Water Solution
___ Potable Water
___ None

Field Analysis Data

Ambient Air VOC Ø ppm Well Mouth Ø ppm

Field Data Collected ___ In-line X In Container

Sample Observations: ___ Turbid X Clear ___ Cloudy ___ Colored ___ Odor

H_2S = 0.1 mg/l
Fe = < 0.1 mg/l
Cl^- = < 5 mg/l
CO_2 = < 1.25 mg/l
ALK (pH) = Ø
ALK (total) 119 mg/l
DO = 7 mg/l

Purge Data	@ ___ Gal.	@ ___ Gal.	@ ___ Gal.	@ ___ Gal.	@ ___ Gal.
Temperature, Deg. C		26.8	26.5	27.1	26.9
pH, units		6.26	6.34	6.41	6.39
Specific Conductivity (umhos/cm. @ 25 Deg. C)		210	210	210	206
Oxidation - Reduction, +/- mv					+163.8
Dissolved Oxygen, ppm					

Sample Collection Requirements (✓ If Required at this Location)

Analytical Parameter	✓ If Field Filtered	Preservation Method	Volume Required	✓ If Sample Collected	Sample Bottle IDs
VOA		HCL	3X40ml	✓	/ / /
~~SVOA~~		4OC			/ / /
~~Pest/PCB~~		4OC			/ / /
~~Inorganics~~		HNO_3			/ / /
~~Explosives~~		4°C			/ / /
~~TPH~~		H_2SO_4			/ / /
TOC		H_2SO_4	1X250ml	X	/ / /
Nitrate/Nitrite/Sulfate		~~[illegible]~~	1X1l	X	/ / /

Notes:

methane - 2X40ml
Sulfide - 1X1l w/ZnAc Pr[illegible]

DEPARTMENT OF THE NAVY

SOUTHERN DIVISION
NAVAL FACILITIES ENGINEERING COMMAND
CHARLESTON, SC.

WELL CONSTRUCTION DETAIL

WELL NUMBER: OLD-39-13B

DATE OF INSTALLATION: 4-22/0-

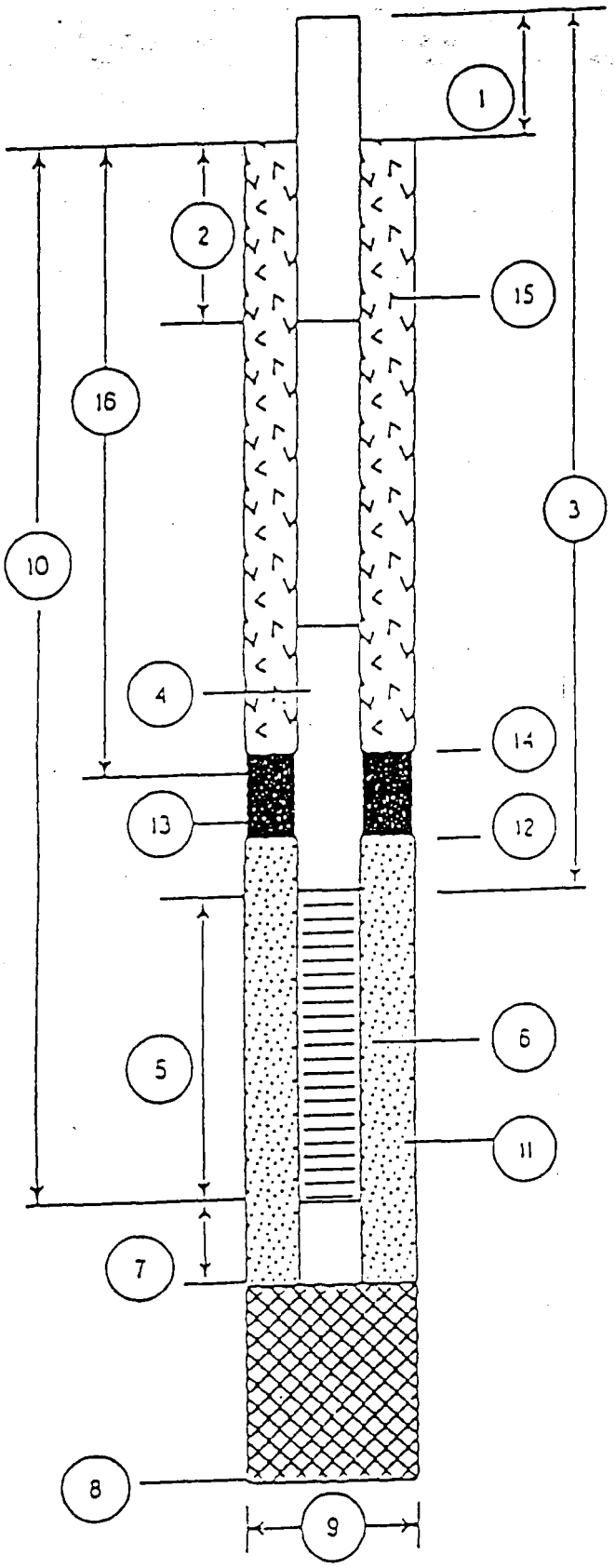

1. Height of Casing above ground: FM
2. Depth to first Coupling: 3'
   Coupling Interval Depths: 10'
3. Total Length of Riser Pipe: 23'
4. Type of Riser Pipe: 2" Sched 40 PVC
5. Length of Screen: 5'
6. Type of Screen: 2" Sched 40 PVC 0.010 Slot
7. Length of Sump: 6"
8. Total Depth of Boring: 28.5
9. Diameter of Boring: 10"
10. Depth to Bottom of Screen: 28'
11. Type of Screen Filler: Silica Sand
    Quantity Used: 300 lb Size: 20/30
12. Depth to Top of Filler: 21'
13. Type of Seal: Fine Sand / Bentonite
    Quantity Used: 50 lb / 25 lb
14. Depth to Top of Seal: 17'
15. Type of Grout: Neat Cement
    Grout Mixture: 94 lb Portland Cement / 6 lb Bentonite Gel / 8 gal water
    Method of Placement: Tremie
16. Tot. Depth of 6 in. Steel Casing: NA

GROUNDWATER SAMPLE FIELD DATA

Project: NTC ORLANDO
Point of Interest: SA 39
Project Number: 08545.10
Date: 5-13/97
Sample Location ID: OLD-39-13B
Time: Start: 1612 End: 1855
Signature of Sampler: William P. Olsen

Water Level/Well Data

Well Depth 27.90 Ft. — X Measured ___ Historical — X Top of Well ___ Top of Protective Casing

Well Riser Stick-up (from ground) NA Ft.

Protective Casing/Well Difference NA Ft.

Protective Casing NA Ft.

Depth to Water 13.24 Ft.

Well Material: X PVC ___ SS

Well Locked?: X Yes ___ No

Well Dia. X 2 inch ___ 4 inch ___ 6 inch

Water Level Equip. Used: X Elect. Cond. Probe ___ Float Activated ___ Press. Transducer

Height of Water Column 14.66 Ft. X [X .16 Gal/Ft. (2 in.) ___ .65 Gal/Ft. (4 in.) ___ 1.5 Gal/Ft. (6 in.) ___ Gal/Ft. (___ in.)] = [2.35 Gal/Vol ___ 8 Total Gal Purged]

Well Integrity: Prot. Casing Secure ___ Yes ___ No; Concrete Collar Intact NA ___ Yes ___ No; Other ___ ___ Yes ___ No

Equipment Documentation

Purging/Sampling Equipment Used:

(✓ If Used For) Purging	Sampling		Equipment ID
X	X	Peristaltic Pump	
		Submersible Pump	
		Bailer	
		PVC/Silicon Tubing	
X	X	Teflon/Silicon Tubing	
		Airlift	
		Hand Pump	
		In-line Filter	
		Press/Vac Filter	

Decontamination Fluids Used:

(✓ All That Apply at Location)
___ Methanol (100%)
___ 25% Methanol/75% ASTM Type II water
X Deionized water
___ Liquinox Solution
___ Hexane
___ HNO_3/D.I. Water Solution
___ Potable Water
___ None

Field Analysis Data

Ambient Air VOC Ø ppm Well Mouth Ø ppm

Field Data Collected ___ In-line X In Container

Sample Observations: X Turbid ___ Clear ___ Cloudy ___ Colored ___ Odor

Purge Data	___ Gal.	___ Gal.	___ Gal.	___ Gal.	8 Gal.
Temperature, Deg. C	25.3	25.6	25.5	25.4	25.2
pH, units	5.24	5.13	5.17	5.06	5.05
Specific Conductivity	38	48	53	52	55
~~Turbidity @ 25 Deg. C~~					
Oxidation - Reduction, +/- mv					176.0
Dissolved Oxygen, ppm					

Sample Collection Requirements

(✓ If Required at this Location)

Analytical Parameter	✓ If Field Filtered	Preservation Method	Volume Required	✓ If Sample Collected	Sample Bottle IDs
VOA		HCL			/ / / ALK (Alk.)
SVOA		4OC			/ / / HCO3 + Cond 34 mg/L
Pest/PCB		4OC			/ / / H2S 0.5 mg/L
Inorganics		HNO_3			/ / /
Explosives		4°C			/ / / Fe 2+ 0.1 mg/L
TPH		H_2SO_4			/ / / Fe 0.3 mg/L
TOC		H_2SO_4			/ / / Cl-
Nitrate/Nitrite		H_2SO_4			/ / / SO4

Notes: Sulfide

SOIL BORING LOG

		Point of Interest:	SA-39
		Boring No.:	CLD-39-14
Client: South DIV	Project No. 08545.10	Protection:	D
Contractor: CDS	Date Started: 4-24/97	Completed:	5-1/97
Method: HSA/Rotary	Casing Size: 15"/6"	PI Meter:	Porta FID
Ground Elev.:	Soil Drilled: 40'	Total Depth:	40'
Logged by: WDO	Checked by:	▽ Below Ground:	
Screen: 5 (ft.)	Riser: 35 (ft.)	Diam: 2" (ID)	Material: PVC
Page 1 of:			

DEPTH (FT)	SAMPLE NUMBER	SAMPLE DEPTH	CLP/SCREENING	RECOVERY	PID (ppm)	SOIL/ROCK DESCRIPTION	SOIL CLASS	BLOWS/6-IN.	WELL DATA	LITHOLOGY	ELEVATION (FT.)
1				NA	Ø	Gray brown fine sand, some limerock and concrete debris	SP				
2											
3				NA	Ø						
4						Dark Brown fine sand, trace silt					
5				60	Ø		SP				
6											
7				70	Ø						
8											
9				70	Ø						
10											
11				80	Ø						
12											
13				60	Ø	off white/gray fine sand, moist/wet, loose	SP				
14											
15				80	Ø	gray/brown fine sand, trace loose sand					
16											
17				100	Ø		SP				
18											
19				90	Ø						
20											
21				70	Ø						
22											
23				50	Ø	light gray fine sand 1" stringer of white fine sand @ 24.5 ft	SP				
24											

PROPORTIONS	(-) AMOUNT (-)	ABBREVIATIONS		
Trace (tr)	0-10%	f = fine	gr = gray	MS = Split Spoon
Little (li)	10-20%	m = medium	bn = brown	SW = Screened Auger
Some (so)	20-35%	c = coarse	blk = black	HP = Hydropunch
and	35-50%			

SOIL BORING LOG

Point of Interest: SA-39			
Boring No.: OLD-39-14			
Client: South DIV	Project No. 08545.10	Protection: D	
Contractor: CDS	Date Started: 4-24/97	Completed: 5-1/97	
Method: HSA/Rotary	Casing Size: 15" / 6"	PI Meter: PortaFID	
Ground Elev.:	Soil Drilled: 40'	Total Depth: 40'	
Logged by: WDO	Checked by:	▽ Below Ground: -	
Screen: 5 (ft.)	Riser: (ft.)	Diam: 2" (ID)	Material: PVC
Page 2 of:			

DEPTH (FT)	SAMPLE NUMBER	SAMPLE DEPTH	CLP/SCREENING	RECOVERY	PID (ppm)	SOIL/ROCK DESCRIPTION	SOIL CLASS	BLOWS/6-IN.	WELL DATA	LITHOLOGY	ELEVATION (FT.)
26				80	Ø	Brown fine sand w/silt, slightly cohesive	SM	21, 27, 3			
27				90	Ø	brown sand and clay, fine sand, cohesive, clay lenses @ 27.5 and 28.5 ft	SC	6, 16, 30, 9			
28											
29				90	Ø			16, 15, 12, 8			
30											
31				90	Ø			6, 10, 12			
32						brownish, trace fine sand, stiff	CL				
33				50	Ø	lt brown sandy clay	SC	4, 7, 9			
34						Tan medium sand, some silt and fine sand, brown mottling @ 37 ft and below	SP	10, 7, 10, 13			
35				50	Ø						
36								15, 8, 9			
37				50	Ø						
38								10, 14, 7			
39				50	Ø			8, 11, 16			
40											

PROPORTIONS	(-) AMOUNT (-)	ABBREVIATIONS		
Trace (tr)	0-10%	f = fine	gr = gray	MS = Split Spoon
Little (li)	10-20%	m = medium	bn = brown	SW = Screened Auger
Some (so)	20-35%	c = coarse	blk = black	HP = Hydropunch
and	35-50%			

DEPARTMENT OF THE NAVY

SOUTHERN DIVISION
NAVAL FACILITIES ENGINEERING COMMAND
CHARLESTON, SC.

WELL CONSTRUCTION DETAIL

WELL NUMBER: OLD-39-14C

DATE OF INSTALLATION: 5-1/9

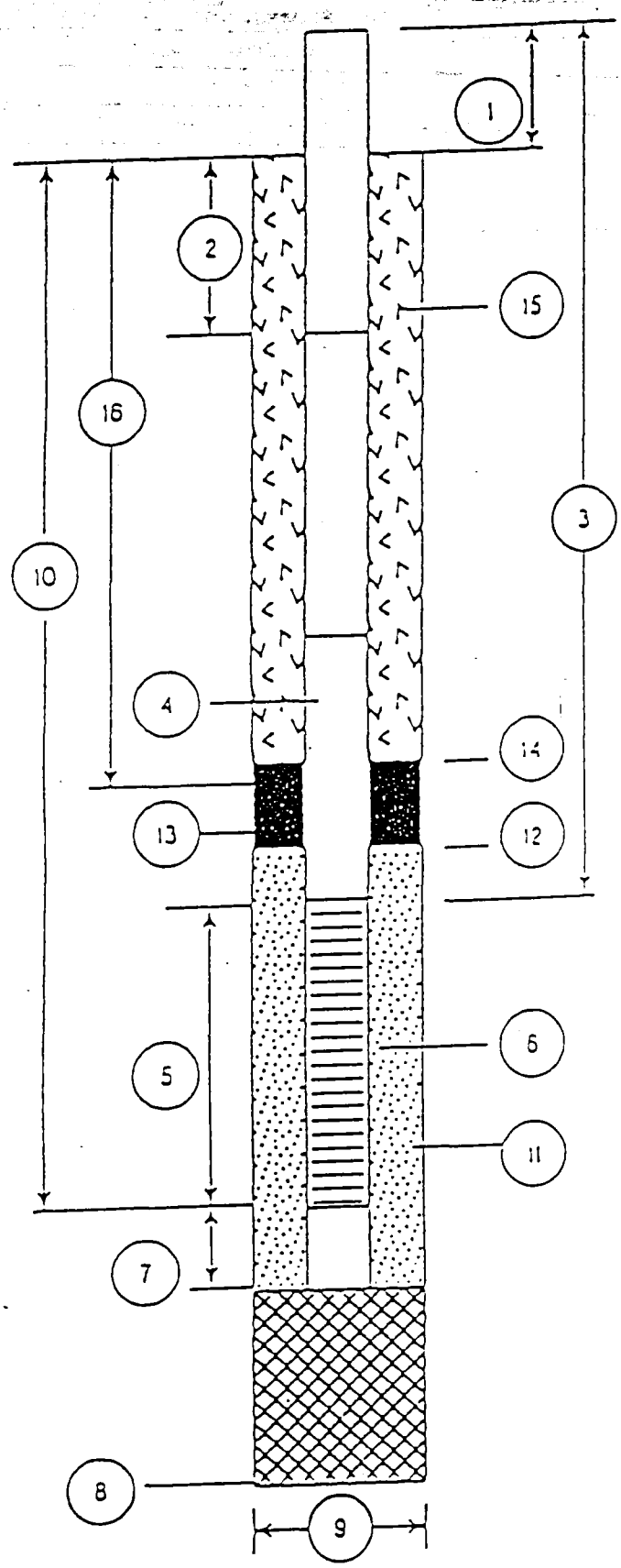

1. Height of Casing above ground: FM
2. Depth to first Coupling: 5'
   Coupling Interval Depths: 10'
3. Total Length of Riser Pipe: 35'
4. Type of Riser Pipe: 2" Sched. 40 PVC
5. Length of Screen: 5'
6. Type of Screen: 2" Sched 40 PVC 0.010 slot
7. Length of Sump: 6"
8. Total Depth of Boring: 40'
9. Diameter of Boring: 14"/6"
10. Depth to Bottom of Screen: 40'
11. Type of Screen Filter: Silica Sand
    Quantity Used: 75 lb Size: 20/3
12. Depth to Top of Filter: 33'
13. Type of Seal: fine sand / bentonite
    Quantity Used: 25 lb / 30 lb
14. Depth to Top of Seal: 29'
15. Type of Grout: Neat cement
    Grout Mixture:
    Method of Placement: 50 gal
16. Tot. Depth of 6 in. ~~Steel~~ PVC Casing: 31'

GROUNDWATER SAMPLE FIELD DATA

Project: NTC ORLANDO
Point of Interest: SA39
Project Number: 08545.10
Date: 5-14/97
Sample Location ID: OLD-39-14C
Time: Start: 0945 End: 1255
Signature of Sampler: [signature]

Water Level/Well Data

Well Depth 39.52 Ft. — X Measured / ___ Historical — X Top of Well / ___ Top of Protective Casing / ___ ___

Well Riser Stick-up (from ground) NA Ft.

Protective Casing/Well Difference NA Ft.

Protective Casing NA Ft.

Depth to Water 13.56 Ft.

Well Material: X PVC / ___ SS / ___

Well Locked?: X Yes / ___ No

Well Dia. X 2 inch / ___ 4 inch / ___ 6 inch / ___ ___

Water Level Equip. Used: X Elect. Cond. Probe / ___ Float Activated / ___ Press. Transducer / ___ ___

Height of Water Column 25.96 Ft. X [X .16 Gal/Ft. (2 in.) / ___ .65 Gal/Ft. (4 in.) / ___ 1.5 Gal/Ft. (6 in.) / ___ ___ Gal/Ft. (___ in.)] = [4.15 Gal/Vol / 21 Total Gal Purged]

Well Integrity: Yes / No
Prot. Casing Secure ___ ___
Concrete Collar Intact NA ___ ___
Other ___ ___

Equipment Documentation

Purging/Sampling Equipment Used:

(✓ If Used For) Purging	Sampling		Equipment ID
X	X	Peristaltic Pump	
		Submersible Pump	
		Bailer	
		PVC/Silicon Tubing	
X	X	Teflon/Silicon Tubing	
		Airlift	
		Hand Pump	
		In-line Filter	
		Press/Vac Filter	

Decontamination Fluids Used:

(✓ All That Apply at Location)
___ Methanol (100%)
___ 25% Methanol/75% ASTM Type II water
X Deionized Water
___ Liquinox Solution
___ Hexane
___ HNO_3/D.I. Water Solution
___ Potable Water
___ None
___ ___
___ ___

Field Analysis Data

Ambient Air VOC 0 ppm Well Mouth 0 ppm

Field Data Collected: ___ In-line / X In Container

Sample Observations: ___ Turbid / X Clear / ___ Cloudy / ___ Colored / ___ Odor

Purge Data	@ 14 Gal.	@ 16 Gal.	@ 19 Gal.	@ 20 Gal.	@ 21 Gal.
Temperature, Deg. C	26.5	26.5	26.7	26.6	26.7
pH, units	5.51	5.26	5.42	5.36	5.52
Specific Conductivity (umhos/cm. @ 25 Deg. C.)	70	70	70	69	69
Oxidation - Reduction, +/- mv					73.5
Dissolved Oxygen, ppm					

Sample Collection Requirements

(✓ If Required at this Location)

Analytical Parameter	✓ If Field Filtered	Preservation Method	Volume Required	✓ If Sample Collected	Sample Bottle IDs
VOA		HCL			/ / /
SVOA		4OC			/ / /
Pest/PCB		4OC			/ / /
Inorganics		HNO_3			/ / /
Explosives		4°C			/ / /
TPH		H_2SO_4			/ / /
TOC		H_2SO_4			/ / /
Nitrate		H_2SO_4			/ / /

ALK (Ph) 0
ALK Total 34 mg/L
Cl- 15 mg/L
CO2 5 mg/L
F- 1 mg/L
NO3- 5 mg/L

Notes: ___

DEPARTMENT OF THE NAVY

SOUTHERN DIVISION
NAVAL FACILITIES ENGINEERING COMMAND
CHARLESTON, SC.

WELL CONSTRUCTION DETAIL

WELL NUMBER: OLD-39-15B

DATE OF INSTALLATION: 4-22

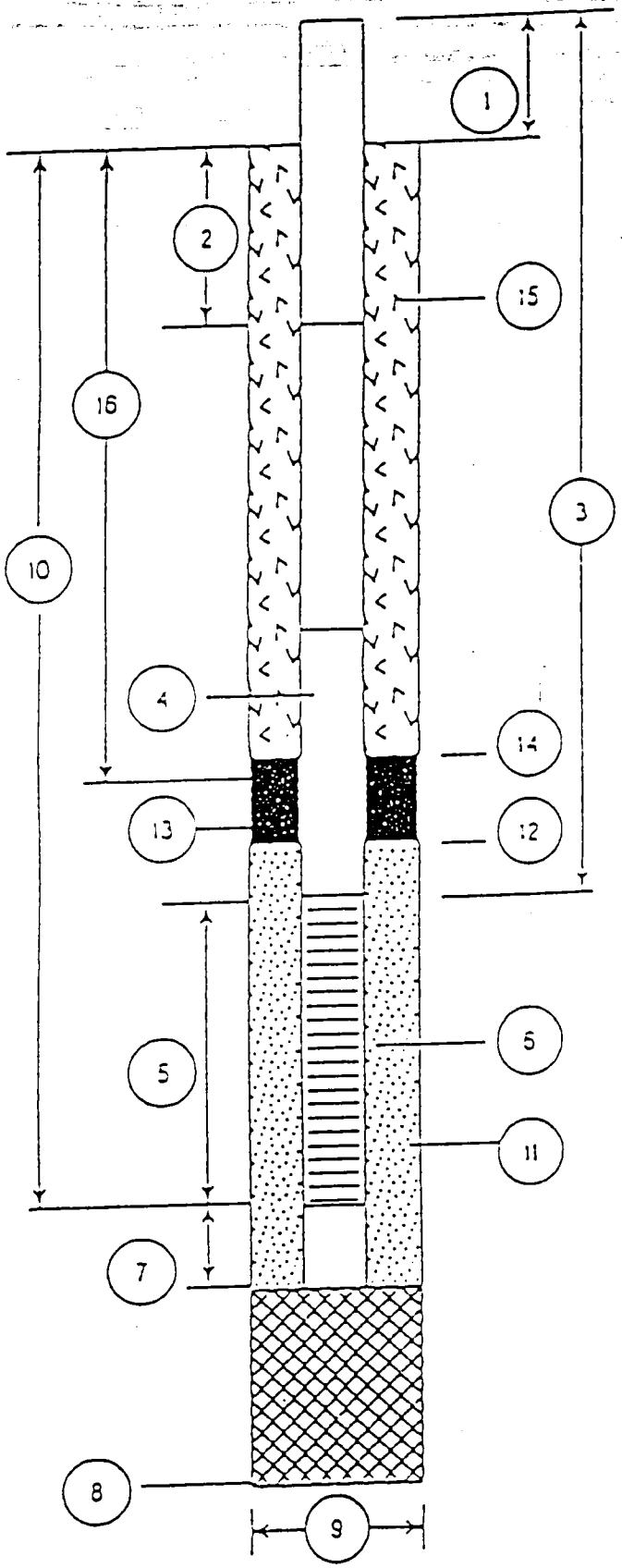

1. Height of Casing above ground: FM
2. Depth to first Coupling: 10'
   Coupling Interval Depths: 10'
3. Total Length of Riser Pipe: 20'
4. Type of Riser Pipe: 2" sched. 40 PVC
5. Length of Screen: 5'
6. Type of Screen: 2" sched 40 PVC 0.010 slot
7. Length of Sump: 6"
8. Total Depth of Boring: 25'
9. Diameter of Boring: 10"
10. Depth to Bottom of Screen: 25'
11. Type of Screen Filter: Silica Sand
    Quantity Used: 300 lb Size: 20/[illegible]
12. Depth to Top of Filter: 18'
13. Type of Seal: fine sand/ bentonite
    Quantity Used: 50 lb/ 25 lb
14. Depth to Top of Seal: 14'
15. Type of Grout: Neat cement
    Grout Mixture:
    Method of Placement: TREMIE
16. Tot. Depth of 6 in. Steel Casing: NA

GROUNDWATER SAMPLE FIELD DATA

Project: NTC ORLANDO
Point of Interest: SA39
Project Number: 08545.10
Date: 5.22/97
Sample Location ID: OLD-39-15B
Time: Start: 1055 End: 1236
Signature of Sampler: [illegible]

Water Level/Well Data

Well Depth 24.72 Ft. — X Measured / ___ Historical

X Top of Well / ___ Top of Protective Casing

Well Riser Stick-up (from ground) NA Ft.

Protective Casing/Well Difference NA Ft.

Protective Casing NA Ft.

Depth to Water 12.16 Ft.

Well Material: X PVC / ___ SS

Well Locked?: X Yes / ___ No

Well Dia. X 2 inch / ___ 4 inch / ___ 6 inch

Water Level Equip. Used: X Elect. Cond. Probe / ___ Float Activated / ___ Press. Transducer

Height of Water Column 12.56 Ft. X X .16 Gal/Ft. (2 in.) / ___ .65 Gal/Ft. (4 in.) / ___ 1.5 Gal/Ft. (6 in.) / ___ Gal/Ft. (___ in.) = 1.97 Gal/Vol; 7 Total Gal Purged

Well Integrity: Prot. Casing Secure / Concrete Collar Intact / Other — NA

	Yes	No
Prot. Casing Secure		
Concrete Collar Intact		
Other		

Equipment Documentation

Purging/Sampling Equipment Used:

(✓ If Used For) Purging	Sampling		Equipment ID
	X	Peristaltic Pump	
		Submersible Pump	
		Bailer	
		PVC/Silicon Tubing	
X	X	Teflon/~~Silicon~~ Tubing	
		Airlift	
		Hand Pump	
		In-line Filter	
		Press/Vac Filter	

Decontamination Fluids Used:

(✓ All That Apply at Location)

- ___ Methanol (100%)
- ___ 25% Methanol/75% ASTM Type II water
- X Deionized Water
- ___ Liquinox Solution
- ___ Hexane
- ___ HNO_3/D.I. Water Solution
- ___ Potable Water
- ___ None

Field Analysis Data

Ambient Air VOC CD ppm Well Mouth 0 ppm

Field Data Collected: ___ In-line / X In Container

Sample Observations: ___ Turbid / X Clear / ___ Cloudy / ___ Colored / ___ Odor

H_2S 0.7 mg/L
CO_2 100 mg/L
ALK 341 mg/L
Cl^- 20 mg/L
Fe 1.0 mg/L
Fe^{2+} 0.9 mg/L

Purge Data @ ___ Gal.	@ 2.5 Gal.	@ 4.5 Gal.	@ 5.5 Gal.	@ 7 Gal.
Temperature, Deg. C —	25.0	25.0	25.0	25.0
pH, units —	5.37	5.33	5.30	5.32
Specific Conductivity 135	185	188	165	165
~~Turbidity @ 25 Deg. C~~ NTU 9.43	11.61	8.52	11.44	17.10
Oxidation - Reduction, +/- mv —	—	—	—	138.4
Dissolved Oxygen, ~~ppm~~ —	—	—	—	0.89 mg/L

Sample Collection Requirements

(✓ If Required at this Location)

Analytical Parameter	✓ If Field Filtered	Preservation Method	Volume Required	✓ If Sample Collected	Sample Bottle IDs
VOA		HCL			/ / /
SVOA		4OC			/ / /
Pest/PCB		4OC			/ / /
Inorganics		HNO_3			/ / /
Explosives		4°C			/ / /
TPH		H_2SO_4			/ / /
TOC		H_2SO_4			/ / /
Nitrate		H_2SO_4			/ / /

Notes:

SOIL BORING LOG

Point of Interest: SA 39			
Boring No.: OLD-39-16			
Client: South Div	Project No. 08545.10	Protection: D	
Contractor: CDS	Date Started: 4-30/97	Completed: 5-3/97	
Method: HSA / Rotary	Casing Size: 15" / 6"	PI Meter: Porta-FID	
Ground Elev.:	Soil Drilled: 40	Total Depth: 40	
Logged by: PGM	Checked by: WDO	▽ Below Ground:	
Screen: 5 (ft.)	Riser: 35 (ft.)	Diam: 2" (ID)	Material: PVC
Page 1 of: 2			

DEPTH (FT)	SAMPLE NUMBER	SAMPLE DEPTH	CLP/SCREENING	RECOVERY	PID (ppm)	SOIL/ROCK DESCRIPTION	SOIL CLASS	BLOWS/6-IN.	WELL DATA	LITHOLOGY	ELEVATION (FT.)
1						See log for OLD-39-04					
2											
3											
4											
5											
6											
7											
8											
9											
10											
11											
12											
13											
14											
15											
16											
17											
18											
19								6 16 16			
20			70		Ø	Dark brown fine sand trace silt	SP	3 5 14			
21			80		Ø			28 4 13			
22											
23			80		Ø	med brown sandy silt, fine sand non plastic dry	ML	50			
24			50		Ø	dark brown fine sand w/silt	SM	15 40			

PROPORTIONS	(-) AMOUNT (-)	ABBREVIATIONS		
Trace (tr)	0-10%	f = fine	gr = gray	MS = Split Spoon
Little (li)	10-20%	m = medium	bn = brown	SW = Screened Auger
Some (so)	20-35%	c = coarse	blk = black	HP = Hydropunch
and	35-50%			

SOIL BORING LOG

			Point of Interest: SA 39
			Boring No.: OLD-39-76
Client: South Div	Project No. 08545.10		Protection: D
Contractor: CDS	Date Started: 4-30/92		Completed: 5-3/92
Method: HSA/Rotary	Casing Size: 15" / 6"		PI Meter: Porta-Fid
Ground Elev.:	Soil Drilled: 40		Total Depth: 40
Logged by: PGM	Checked by: WAO		▽ Below Ground: -
Screen: 5 (ft.)	Riser: 35 (ft.)	Diam: 2 (ID)	Material: PVC	Page 2 of: 2

DEPTH (FT)	SAMPLE NUMBER	SAMPLE DEPTH	CLP/SCREENING	RECOVERY	PID (ppm)	SOIL/ROCK DESCRIPTION	SOIL CLASS	BLOWS/6-IN.	WELL DATA	LITHOLOGY	ELEVATION (FT.)
26						dark brown hard silt to clayey silt w/sand, non plastic	ML	25 25 50 - -			
27				10	Ø						
28											
29				70	Ø	Light brown silty sand Sandier w/depth	SM	14 12 13 17 5 6 7 7 2 2 2 4 2 3 4 5 2 3 7 5 4 6 6 50			
30											
31				90	Ø						
32											
33				50	Ø						
34											
35				50	Ø						
36											
37				50	Ø						
38											
39				70	Ø						
40						TD = 40'					

PROPORTIONS	(-) AMOUNT (-)	ABBREVIATIONS		
Trace (tr)	0-10%	f = fine	gr = gray	MS = Split Spoon
Little (li)	10-20%	m = medium	bn = brown	SW = Screened Auger
Some (so)	20-35%	c = coarse	blk = black	HP = Hydropunch
and	35-50%			

DEPARTMENT OF THE NAVY

SOUTHERN DIVISION
NAVAL FACILITIES ENGINEERING COMMAND
CHARLESTON, SC.

WELL CONSTRUCTION DETAIL

WELL NUMBER: OLD-39-16C

DATE OF INSTALLATION: 5-3/9

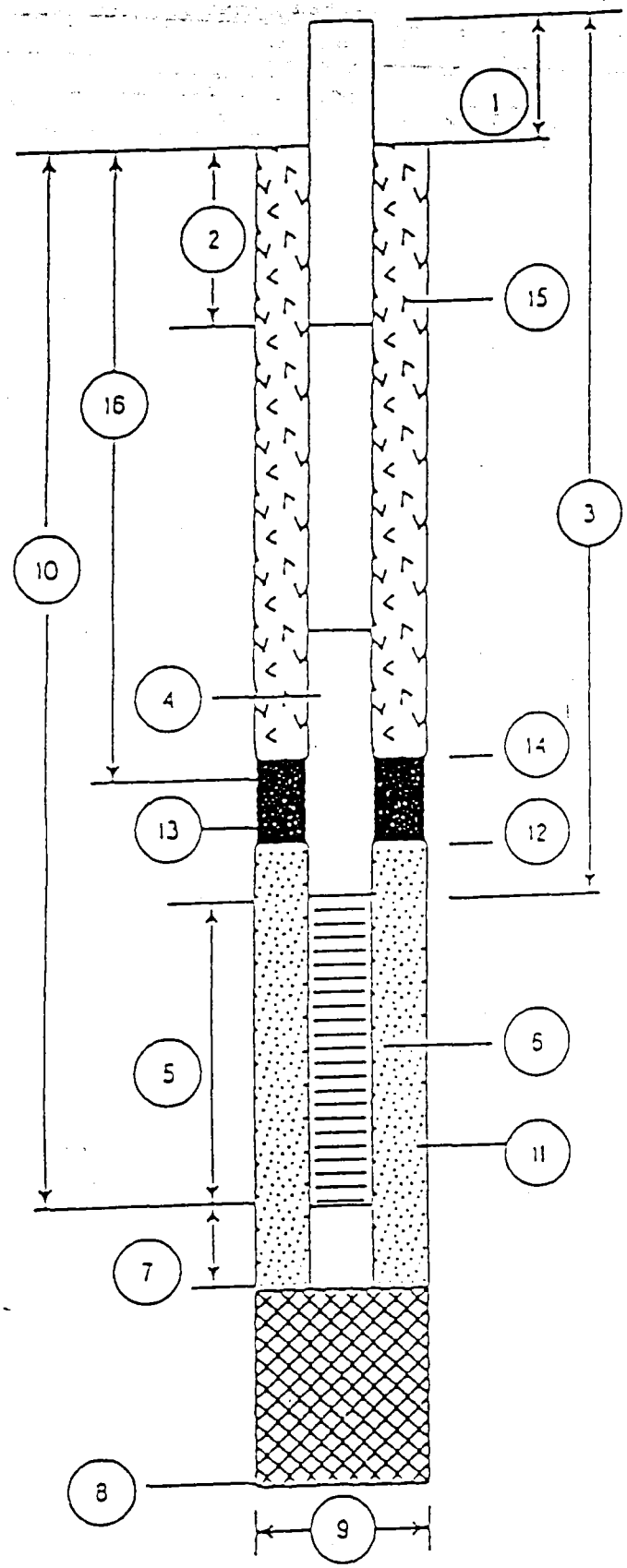

1. Height of Casing above ground: FM
2. Depth to first Coupling: 5'
   Coupling Interval Depths: 10'
3. Total Length of Riser Pipe: 35'
4. Type of Riser Pipe: 2" Sched 40 PVC
5. Length of Screen: 5'
6. Type of Screen: 2" Sched 40 PVC 0.010 slot
7. Length of Sump: 6"
8. Total Depth of Boring: 40'
9. Diameter of Boring: 14"/6"
10. Depth to Bottom of Screen: 40'
11. Type of Screen Filter: Silica Sand
    Quantity Used: 150 lb Size: 20/30
12. Depth to Top of Filter: 27
13. Type of Seal: Fine Sand/Bentonite
    Quantity Used: 25 lb/30 lb
14. Depth to Top of Seal: 23
15. Type of Grout: Neat cement
    Grout Mixture:
    Method of Placement: Tremie
16. Tot. Depth of 6 in ~~Steel~~ PVC Casing: 25'

GROUNDWATER SAMPLE FIELD DATA

Project: NTC ORLANDO
Point of Interest: SA 39
Project Number: 08545.10
Date: 5-22-97
Sample Location ID: OLD-39-16C
Time: Start: 0814 End: 1045
Signature of Sampler: [illegible]

Water Level/Well Data

Well Depth 40.80 Ft. — X Measured / ___ Historical — X Top of Well / ___ Top of Protective Casing

Well Riser Stick-up (from ground) NA Ft.

Protective Casing/Well Difference NA Ft.

Protective Casing NA Ft.

Depth to Water 12.46 Ft.

Well Material: X PVC / ___ SS

Well Locked?: X Yes / ___ No

Well Dia. X 2 inch / ___ 4 inch / ___ 6 inch

Water Level Equip. Used: X Elect. Cond. Probe / ___ Float Activated / ___ Press. Transducer

Height of Water Column 28.34 Ft. X X .16 Gal/Ft. (2 in.) / ___ .65 Gal/Ft. (4 in.) / ___ 1.5 Gal/Ft. (6 in.) / ___ Gal/Ft. (___ in.) = 4.5 Gal/Vol; 24 Total Gal Purged

Well Integrity: Prot. Casing Secure / Concrete Collar Intact / Other — NA — Yes ___ No ___

Equipment Documentation

Purging/Sampling Equipment Used:

(✓ If Used For) Purging	Sampling		Equipment ID
X	X	Peristaltic Pump	
		Submersible Pump	
		Bailer	
		PVC/Silicon Tubing	
X	X	Teflon Tubing	
		Airlift	
		Hand Pump	
		In-line Filter	
		Press/Vac Filter	

Decontamination Fluids Used: (✓ All That Apply at Location)

- ___ Methanol (100%)
- ___ 25% Methanol/75% ASTM Type II water
- X Deionized Water
- ___ Liquinox Solution
- ___ Hexane
- ___ HNO_3/D.I. Water Solution
- ___ Potable Water
- ___ None

Field Analysis Data

Ambient Air VOC Ø ppm Well Mouth Ø ppm

Field Data Collected: ___ In-line / X In Container

Sample Observations: X Turbid / ___ Clear / ___ Cloudy / ___ Colored / ___ Odor

Purge Data	@ ___ Gal.	@ 20 Gal.	@ ___ Gal.	@ ___ Gal.	@ 24 Gal.
Temperature, Deg. C	26.0	26.1	25.9	26.0	26.1
pH, units	5.34	5.35	5.31	5.22	5.24
Specific Conductivity	120	113	110	109	108
~~Turbidity @ 25 Deg. C~~ NTU	87.2	74.2	67.3	63.8	61.3
Oxidation - Reduction, +/- mv	—	—	—	—	40.7 mg/l
Dissolved Oxygen ~~ppm~~	—	—	—	—	1.08 mg/l

CO_2 65 mg/l
H_2S 5.0 mg/l
Cl^- 15 mg/l
ALK 34 mg/l
Fe 0.9 mg/l
Fe^{2+} 0.8 mg/l

Sample Collection Requirements (✓ If Required at this Location)

Analytical Parameter	✓ If Field Filtered	Preservation Method	Volume Required	✓ If Sample Collected	Sample Bottle IDs
VOA	___	HCL	___	___	___ / ___ / ___ / ___
SVOA	___	4°C	___	___	___ / ___ / ___ / ___
Pest/PCB	___	4°C	___	___	___ / ___ / ___ / ___
Inorganics	___	HNO_3	___	___	___ / ___ / ___ / ___
Explosives	___	4°C	___	___	___ / ___ / ___ / ___
TPH	___	H_2SO_4	___	___	___ / ___ / ___ / ___
TOC	___	H_2SO_4	___	___	___ / ___ / ___ / ___
Nitrate	___	H_2SO_4	___	___	___ / ___ / ___ / ___

Notes: ___

DEPARTMENT OF THE NAVY

SOUTHERN DIVISION
NAVAL FACILITIES ENGINEERING COMMAND
CHARLESTON, SC.

WELL CONSTRUCTION DETAIL

WELL NUMBER: OLD-39-17A

DATE OF INSTALLATION: 4-22/97

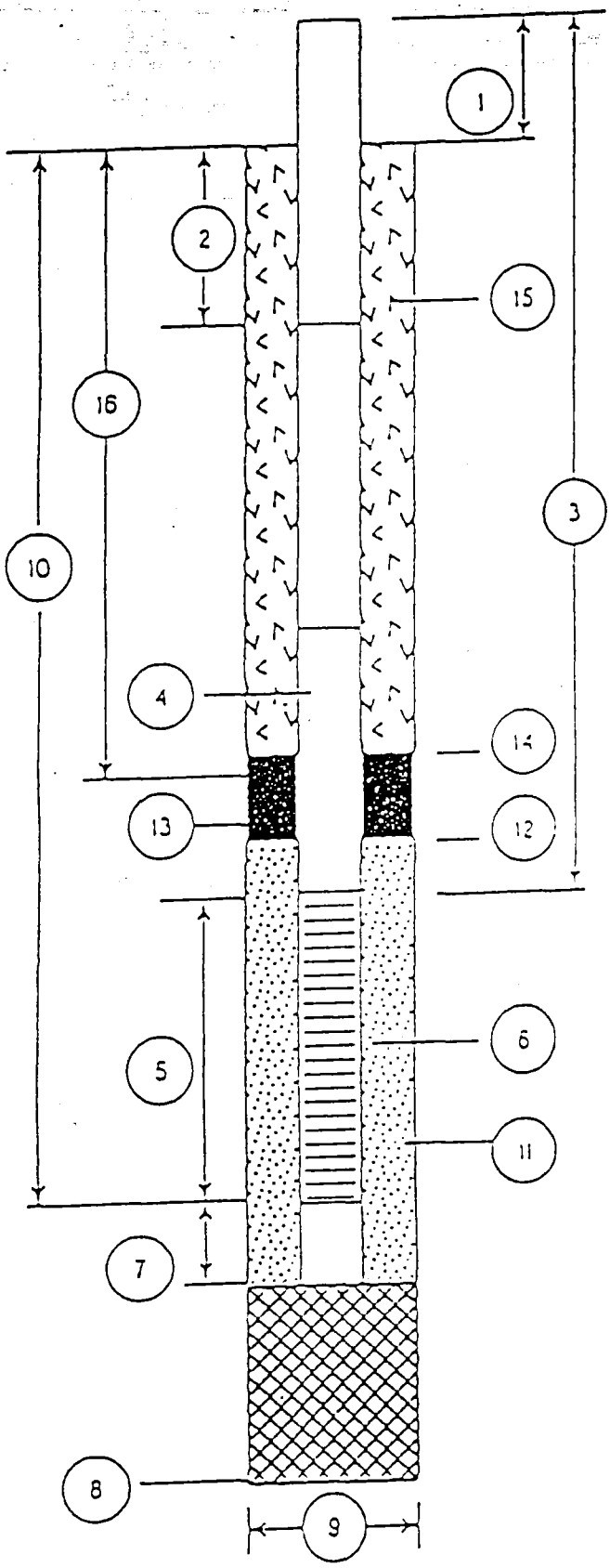

1. Height of Casing above ground: FM
2. Depth to first Coupling: 7'
   Coupling Interval Depths: NA
3. Total Length of Riser Pipe: 7'
4. Type of Riser Pipe: 2" Sched 40 PVC
5. Length of Screen: 10'
6. Type of Screen: 2" Sched 40 PVC 0.010 Slot
7. Length of Sump: 6"
8. Total Depth of Boring: 17.5
9. Diameter of Boring: 10"
10. Depth to Bottom of Screen: 17'
11. Type of Screen Filter: Silica Sand
    Quantity Used: 45 lb Size: 20/30
12. Depth to Top of Filter: 5'
13. Type of Seal: Fine Silica Sand / Bentonite
    Quantity Used: 50 Lb / 25 lb
14. Depth to Top of Seal: 2'
15. Type of Grout: Neat cement
    Grout Mixture:
    Method of Placement: Auger
16. Tot. Depth of 6 in. Steel Casing: NA

GROUNDWATER SAMPLE FIELD DATA

Project: NTC ORLANDO
Project Number: 08545.10
Sample Location ID: OLD-39-17A
Time: Start: 1155 End: 1405

Point of Interest: SA39
Date: 5-21-92
Signature of Sampler: [illegible]

Water Level/Well Data

Well Depth 16.92 Ft. X Measured ___ Historical

X Top of Well ___ Top of Protective Casing

Well Riser Stick-up (from ground) NA Ft.

Protective Casing/Well Difference NA Ft.

Protective Casing NA Ft.

Depth to Water 13.33 Ft.

Well Material: X PVC ___ SS

Well Locked?: X Yes ___ No

Well Dia. X 2 inch ___ 4 inch ___ 6 inch

Water Level Equip. Used: X Elect. Cond. Probe ___ Float Activated ___ Press. Transducer

Height of Water Column 3.59 Ft. X X .16 Gal/Ft. (2 in.) ___ .65 Gal/Ft. (4 in.) ___ 1.5 Gal/Ft. (6 in.) ___ Gal/Ft. (___ in.) = 0.54 Gal/Vol; 4 Total Gal Purged

Well Integrity: Prot. Casing Secure: NA Concrete Collar Intact: Other ___ — Yes ___ No ___

Equipment Documentation

Purging/Sampling Equipment Used:

(✓ If Used For) Purging	Sampling		Equipment ID
X	X	Peristaltic Pump	
		Submersible Pump	
		Bailer	
		PVC/Silicon Tubing	
X	X	Teflon/Silicon Tubing	
		Airlift	
		Hand Pump	
		In-line Filter	
		Press/Vac Filter	

Decontamination Fluids Used: (✓ All That Apply at Location)

- ___ Methanol (100%)
- ___ 25% Methanol/75% ASTM Type II water
- X Deionized Water
- ___ Liquinox Solution
- ___ Hexane
- ___ HNO_3/D.I. Water Solution
- ___ Potable Water
- ___ None

Field Analysis Data

Ambient Air VOC Ø ppm Well Mouth Ø ppm

Field Data Collected ___ In-line X In Container

Sample Observations: ___ Turbid X Clear ___ Cloudy ___ Colored ___ Odor

Purge Data	@ ___ Gal.	@ ___ Gal.	@ ___ Gal.	@ ___ Gal.	@ 4 Gal.
Temperature, Deg. C	28.5	28.3	27.8	27.3	27.1
pH, units	6.37	6.54	6.66	6.64	6.63
Specific Conductivity	449	440	435	432	430
~~Turbidity, @ 25 Deg. C~~ NTU	13.98	5.03	4.22	3.78	3.43
Oxidation - Reduction, +/- mv	—	—	—	—	177.1
Dissolved Oxygen, ~~mg/l~~	—	—	—	—	1.2 mg/l

CO_2 50 mg/l
Cl⁻ 15 mg/l
Fe 0.2 mg/l
H_2S Ø mg/l
Fe^{2+} 0.2 mg/l
ALK(Ph) Ø
ALK = 93.5 mg/l

Sample Collection Requirements (✓ If Required at this Location)

Analytical Parameter	✓ If Field Filtered	Preservation Method	Volume Required	✓ If Sample Collected	Sample Bottle IDs
VOA		HCL			/ / /
~~SVOA~~		4°C			/ / /
Pest/PCB		4°C			/ / /
Inorganics		HNO_3			/ / /
Explosives		4°C			/ / /
~~TPH~~		H_2SO_4			/ / /
TOC		H_2SO_4			/ / /
Nitrate		H_2SO_4			/ / /

Notes: ___

DEPARTMENT OF THE NAVY

SOUTHERN DIVISION
NAVAL FACILITIES ENGINEERING COMMAND
CHARLESTON, SC.

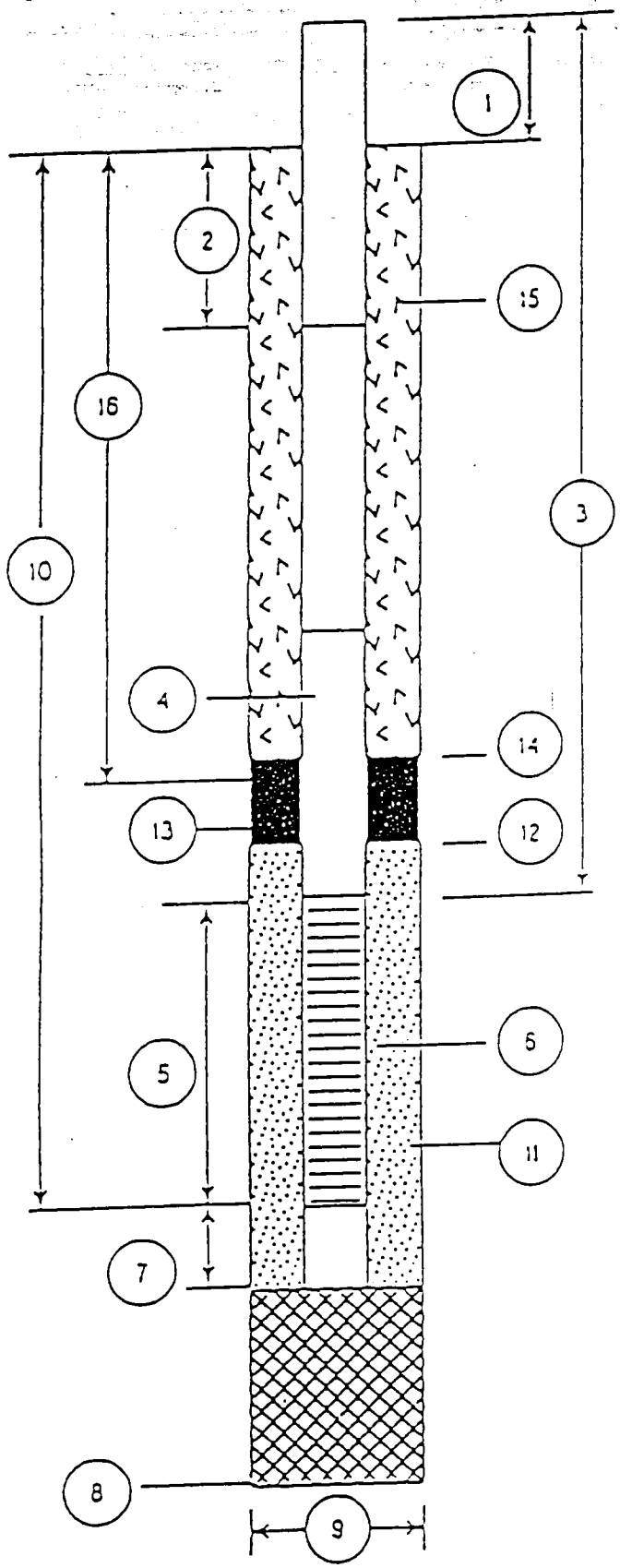

WELL CONSTRUCTION DETAIL

WELL NUMBER: 04J-39-18B

DATE OF INSTALLATION: 4-23

1. Height of Casing above ground: FM
2. Depth to first Coupling: 3'

   Coupling Interval Depths: 10'
3. Total Length of Riser Pipe: 23'
4. Type of Riser Pipe: 2" Sched. 40 PVC
5. Length of Screen: 5'
6. Type of Screen: 2" Sched 40 PVC 0.010 slot
7. Length of Sump: 6"
8. Total Depth of Boring: 28'
9. Diameter of Boring: 10"
10. Depth to Bottom of Screen: 28"
11. Type of Screen Filter: Silica Sand

    Quantity Used: —— Size: 20/3[illegible]
12. Depth to Top of Filter: 21
13. Type of Seal: fine Sand / Bentonite

    Quantity Used: ——
14. Depth to Top of Seal: 17'
15. Type of Grout: Neat Cement

    Grout Mixture:

    Method of Placement: Tremie
16. Tot. Depth of 6 in. Steel Casing: NA

GROUNDWATER SAMPLE FIELD DATA

Project: NTC ORLANDO
Point of Interest: SA39
Project Number: 08543.10
Date: 5-21-97
Sample Location ID: OLD-39-18B
Time: Start: 1405 End: 1610
Signature of Sampler: [illegible]

Water Level/Well Data

Well Depth 27.10 Ft. X Measured ___ Historical
X Top of Well ___ Top of Protective Casing
Well Riser Stick-up (from ground) NA Ft.
Protective Casing/Well Difference NA Ft.
Protective Casing NA Ft.

Depth to Water 13.38 Ft.
Well Material: X PVC ___ SS
Well Locked?: X Yes ___ No
Well Dia. X 2 inch ___ 4 inch ___ 6 inch
Water Level Equip. Used: X Elect. Cond. Probe ___ Float Activated ___ Press. Transducer

Height of Water Column 13.72 Ft. X X .16 Gal/Ft. (2 in.) ___ .65 Gal/Ft. (4 in.) ___ 1.5 Gal/Ft. (6 in.) ___ Gal/Ft. (___ in.) = 2.2 Gal/Vol; 13 Total Gal Purged

Well Integrity: Yes ___ No ___
Prot. Casing Secure ___ ___
Concrete Collar Intact NA ___ ___
Other ___ ___

Equipment Documentation

Purging/Sampling Equipment Used:

(✓ If Used For) Purging	Sampling		Equipment ID
X	X	Peristaltic Pump	
		Submersible Pump	
		Bailer	
		PVC/Silicon Tubing	
X	X	Teflon Tubing	
		Airlift	
		Hand Pump	
		In-line Filter	
		Press/Vac Filter	

Decontamination Fluids Used: (✓ All That Apply at Location)
___ Methanol (100%)
___ 25% Methanol/75% ASTM Type II water
X Deionized Water
___ Liquinox Solution
___ Hexane
___ HNO_3/D.I. Water Solution
___ Potable Water
___ None

Field Analysis Data

Ambient Air VOC Ø ppm Well Mouth Ø ppm
Field Data Collected: X In-line X In Container
Sample Observations: ___ Turbid ___ Clear X Cloudy ___ Colored ___ Odor

Purge Data	@ ___ Gal.	@ ___ Gal.	@ 10 Gal.	@ ___ Gal.	@ 13 Gal.
Temperature, Deg. C	27.0	26.9	27.1	26.9	26.8
pH, units	5.50	5.62	5.51	5.45	5.44
Specific Conductivity	200	200	200	205	200
~~Turbidity @ 25 Deg. C~~ NTU	26.9	23.3	15.78	20.6	19.70
Oxidation - Reduction, +/- mv	—	—	—	—	107.3
Dissolved Oxygen, ~~ppm~~					1.08 mg/l

H_2S 0.5 mg/l
CO_2 100 mg/l
ALK 34 mg/l
Cl^- 35 mg/l
Fe 0.5 mg/l
Fe^{2+} 0.4 mg/l

Sample Collection Requirements (✓ If Required at this Location)

Analytical Parameter	✓ If Field Filtered	Preservation Method	Volume Required	✓ If Sample Collected	Sample Bottle IDs
VOA		HCL			/ / /
SVOA		4OC			/ / /
Pest/PCB		4OC			/ / /
Inorganics		HNO_3			/ / /
Explosives		4°C			/ / /
TPH		H_2SO_4			/ / /
TOC		H_2SO_4			/ / /
Nitrate		H_2SO_4			/ / /

Notes: ___

SOIL BORING LOG

Point of Interest: SA 39		
Boring No.: OLD-39-MC		
Client: South DIV	Project No. 08545.10	Protection: D
Contractor: CDS	Date Started: 4-30/97	Completed: 5-2/97
Method: HSA/Rotary	Casing Size: 15" / 6"	PI Meter: Porta-FID
Ground Elev.:	Soil Drilled: 50'	Total Depth: 50'
Logged by: WDO	Checked by: PGM	▽ Below Ground:
Screen: 5 (ft.)	Riser: 45 (ft.)	Diam: 2 (ID)	Material: PVC	Page 1 of: 2

DEPTH (FT)	SAMPLE NUMBER	SAMPLE DEPTH	CLP/SCREENING	RECOVERY	PID (ppm)	SOIL/ROCK DESCRIPTION	SOIL CLASS	BLOWS/6-IN.	WELL DATA	LITHOLOGY	ELEVATION (FT.)
1				NA	Ø	Gray brown fine sand, trace silt, some lime rock	SP	5 5 7			
2											
3				NA	Ø	grades to		9 7 7			
4											
5				80	Ø	Offwhite fine sand, mottled w/black silt in thin laminae	SP	5 5 6			
6											
7				80	Ø			3 3 2			
8						grades to					
9				90	Ø			2 1 2			
10											
11				50	Ø	brown fine sand		3 5 3			
12											
13				80	Ø	silty sand layers 19-22'	SP	2 2 3			
14											
15				90	Ø			7 6 8			
16											
17				80	Ø			3 6 12			
18											
19				80	Ø			16 17 21			
20											
21				80	Ø			6 8 8			
22											
23				60	Ø			3 6 24			
24											
				60	Ø			19 3 10			

PROPORTIONS	(-) AMOUNT (-)	ABBREVIATIONS		
Trace (tr)	0-10%	f = fine	gr = gray	MS = Split Spoon
Little (li)	10-20%	m = medium	bn = brown	SW = Screened Auger
Some (so)	20-35%	c = coarse	blk = black	HP = Hydropunch
and	35-50%			

SOIL BORING LOG

Client: South Div	Project No. 08545.10		Point of Interest: SA39
			Boring No.: OCD-39-19C
Contractor: CDS	Date Started: 4-30/97		Protection: D
Method: HSA / Rotary	Casing Size: 15"/6"		Completed: 5-2/97
Ground Elev.:	Soil Drilled: 50'		PI Meter: Porta-FID
Logged by: WDO	Checked by: PGm		Total Depth: 50'
			▽ Below Ground:
Screen: 5 (ft.)	Riser: 45 (ft.)	Diam: 2 (ID) / Material: PVC	Page 2 of: 2

DEPTH (FT)	SAMPLE NUMBER	SAMPLE DEPTH	CLP/SCREENING	RECOVERY	PID (ppm)	SOIL/ROCK DESCRIPTION	SOIL CLASS	BLOWS/6-IN.	WELL DATA	LITHOLOGY	ELEVATION (FT.)
26								1			
27				50	Ø	See above		3			
28								50			
29				60	Ø			1			
30						brown silty clay, hard trace fine sand, non plastic	CL	20			
31								15			
32								1			
33						Med. brown clayey silt	ML	10			
34				70	Ø			11			
35				60	Ø	Light brown silty sand	SM	4			
36								3			
37				70	Ø			2			
38								3			
39				70	Ø			2			
40								1			
41				80	Ø			2			
42								3			
43				50	Ø			3			
44								2			
45				60	Ø			3			
46						green silty sand soft	SM	3			
47				70	Ø			2			
48								1			
49				80	Ø			3			
50								5			

PROPORTIONS	(-) AMOUNT (+)	ABBREVIATIONS		
Trace (tr)	0-10%	f = fine	gr = gray	MS = Split Spoon
Little (li)	10-20%	m = medium	bn = brown	SW = Screened Auger
Some (so)	20-35%	c = coarse	blk = black	HP = Hydropunch
and	35-50%			

DEPARTMENT OF THE NAVY

SOUTHERN DIVISION
NAVAL FACILITIES ENGINEERING COMMAND
CHARLESTON, SC.

WELL CONSTRUCTION DETAIL

WELL NUMBER: OLD-39-19C

DATE OF INSTALLATION: 5-2/9

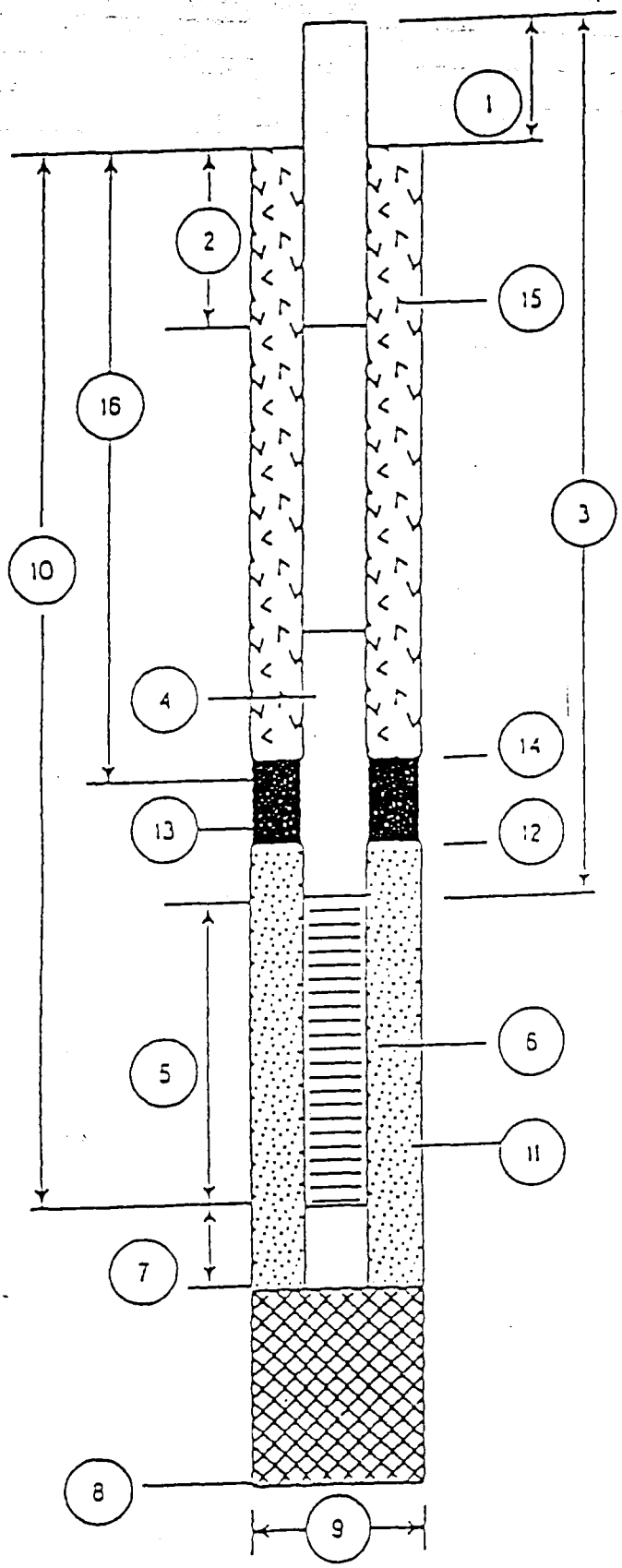

1. Height of Casing above ground: FM
2. Depth to first Coupling: 5'
   Coupling Interval Depths: 10'
3. Total Length of Riser Pipe: 45'
4. Type of Riser Pipe: 2" sched 40 PVC
5. Length of Screen: 5'
6. Type of Screen: 2" sched 40 PVC 0.010 slot
7. Length of Sump: 6"
8. Total Depth of Boring: 50'
9. Diameter of Boring: 14"/6"
10. Depth to Bottom of Screen: 50'
11. Type of Screen Filter: Silica Sand
    Quantity Used: 75 lb Size: 20/30
12. Depth to Top of Filter: 43'
13. Type of Seal: fine (sand) / Bentonite
    Quantity Used: ——
14. Depth to Top of Seal: 29'
15. Type of Grout: Neat cement
    Grout Mixture:
    Method of Placement: tremie
16. Tot. Depth of 6 in. ~~Steel~~ PVC Casing: 31'

GROUNDWATER SAMPLE FIELD DATA

Project: NTC ORLANDO
Point of Interest: SA 39
Project Number: 08543.10
Date: 5-22/92
Sample Location ID: OLD-39-19C
Time: Start: 1410 End: 1715
Signature of Sampler: [illegible]

Water Level/Well Data

Well Depth 49.80 Ft. — X Measured / ___ Historical — X Top of Well / ___ Top of Protective Casing

Well Riser Stick-up (from ground) NA Ft.

Protective Casing/Well Difference NA Ft.

Protective Casing NA Ft.

Depth to Water 14.08 Ft.

Well Material: X PVC / ___ SS

Well Locked?: X Yes / ___ No

Well Dia. X 2 inch / ___ 4 inch / ___ 6 inch

Water Level Equip. Used: X Elect. Cond. Probe / ___ Float Activated / ___ Press. Transducer

Height of Water Column 35.72 Ft. X X .16 Gal/Ft. (2 in.) / ___ .65 Gal/Ft. (4 in.) / ___ 1.5 Gal/Ft. (6 in.) / ___ Gal/Ft. (__ in.) = 5.8 Gal/Vol; 21 Total Gal Purged

Well Integrity: Yes / No
Prot. Casing Secure
Concrete Collar Intact NA
Other

Equipment Documentation

Purging/Sampling Equipment Used:

(✓ If Used For) Purging	Sampling		Equipment ID
X	X	Peristaltic Pump	
		Submersible Pump	
		Bailer	
		PVC/Silicon Tubing	
X	X	Teflon/~~Silicone~~ Tubing	
		Airlift	
		Hand Pump	
		In-line Filter	
		Press/Vac Filter	

Decontamination Fluids Used: (✓ All That Apply at Location)

- ___ Methanol (100%)
- ___ 25% Methanol/75% ASTM Type II water
- X Deionized Water
- ___ Liquinox Solution
- ___ Hexane
- ___ HNO_3/D.I. Water Solution
- ___ Potable Water
- ___ None

Field Analysis Data

Ambient Air VOC Ø ppm Well Mouth Ø ppm

Field Data Collected: ___ In-line / X In Container

Sample Observations: ___ Turbid / ___ Clear / X Cloudy / ___ Colored / ___ Odor

Purge Data	@ 5 Gal.	@ 10 Gal.	@ 15 Gal.	@ 20 Gal.	@ 21 Gal.
Temperature, Deg. C	26.5	28.2	27.2	26.9	26.5
pH, units	5.59	5.15	5.14	5.12	5.18
Specific Conductivity	146	103	100	95	95
~~Turbidity, NTU @ 25 Deg. C~~	220.0	147.3	154.2	152.0	146.9
Oxidation - Reduction, +/- mv	—	—	—	—	61.4
Dissolved Oxygen, ~~ppm~~	—	—	—	—	0.86 mg/L

Cl⁻ 20 mg/L
CO_2 50 mg/L
Fe 1.1 mg/L
H_2S 5 mg/L
Fe⁺² 0.9 mg/L
ALK = 40.8

Sample Collection Requirements

(✓ if Required at this Location)

Analytical Parameter	✓ If Field Filtered	Preservation Method	Volume Required	✓ If Sample Collected	Sample Bottle IDs
VOA		HCL			/ / /
SVOA		4°C			/ / /
Pest/PCB		4°C			/ / /
Inorganics		HNO_3			/ / /
Explosives		4°C			/ / /
TPH		H_2SO_4			/ / /
TOC		H_2SO_4			/ / /
Nutrients		H_2SO_4			/ / /

Notes:

DEPARTMENT OF THE NAVY

SOUTHERN DIVISION
NAVAL FACILITIES ENGINEERING COMMAND
CHARLESTON, SC.

WELL CONSTRUCTION DETAIL

WELL NUMBER: OLD 39-20 A

DATE OF INSTALLATION: 4-21/97

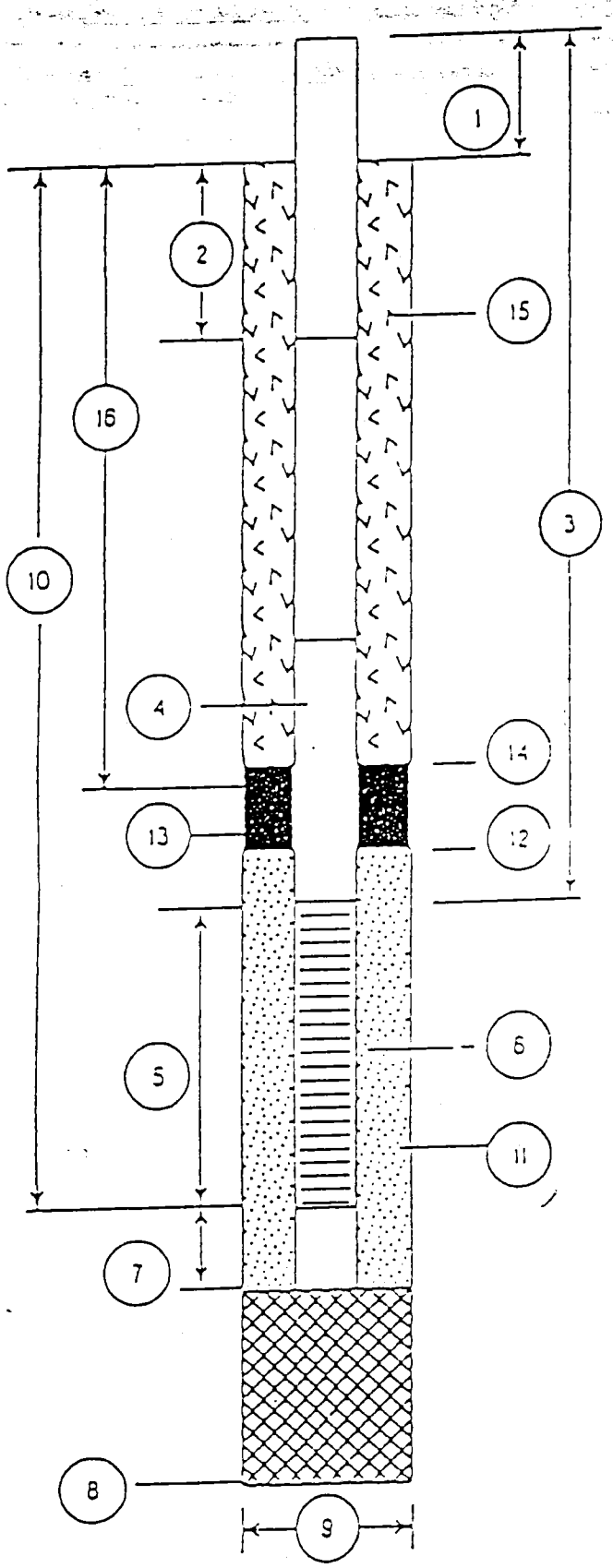

1. Height of Casing above ground: FM
2. Depth to first Coupling: 7'
   Coupling Interval Depths: NA
3. Total Length of Riser Pipe: 7'
4. Type of Riser Pipe: 2" sched. 40 PVC
5. Length of Screen: 10'
6. Type of Screen: 2" sched 40 PVC 0.010 slot
7. Length of Sump: 6"
8. Total Depth of Boring: 17.5
9. Diameter of Boring: 10"
10. Depth to Bottom of Screen: 17'
11. Type of Screen Filter: Silica Sand
    Quantity Used: 450 lb Size: 20/30
12. Depth to Top of Filter: 5'
13. Type of Seal: Fine Sand/Bentonite
    Quantity Used: 50 lb/25 lb
14. Depth to Top of Seal: 2'
15. Type of Grout: Neat cement
    Grout Mixture:
    Method of Placement: Pour
16. Tot. Depth of 6 in. Steel Casing: NA

GROUNDWATER SAMPLE FIELD DATA

Project: NTC ORLANDO
Point of Interest: SA 39
Project Number: 08545.10
Date: 5-21/97
Sample Location ID: OLD-39-20A
Time: Start: 0830 End: 1130
Signature of Sampler: [illegible]

Water Level/Well Data

Well Depth 17.12 Ft. — X Measured / ___ Historical — X Top of Well / ___ Top of Protective Casing

Well Riser Stick-up (from ground) NA Ft.

Protective Casing/Well Difference NA Ft.

Protective Casing NA Ft.

Depth to Water 13.93 Ft.

Well Material: X PVC / ___ SS

Well Locked?: X Yes / ___ No

Well Dia. X 2 inch / ___ 4 inch / ___ 6 inch

Water Level Equip. Used: X Elect. Cond. Probe / ___ Float Activated / ___ Press. Transducer

Height of Water Column 3.19 Ft. X X .16 Gal/Ft. (2 in.) / ___ .65 Gal/Ft. (4 in.) / ___ 1.5 Gal/Ft. (6 in.) / ___ Gal/Ft. (___ in.) = 0.51 Gal/Vol; 6 Total Gal Purged

Well Integrity: Yes ___ No ___
Prot. Casing Secure: NA
Concrete Collar Intact: ___ ___
Other: ___ ___

Equipment Documentation

Purging/Sampling Equipment Used:

(✓ If Used For) Purging	Sampling		Equipment ID
X	X	Peristaltic Pump	
___	___	Submersible Pump	
___	___	Bailer	
___	___	PVC/Silicon Tubing	
X	X	Teflon/~~Silicon~~ Tubing	
___	___	Airlift	
___	___	Hand Pump	
___	___	In-line Filter	
___	___	Press/Vac Filter	

Decontamination Fluids Used: (✓ All That Apply at Location)

- ___ Methanol (100%)
- ___ 25% Methanol/75% ASTM Type II water
- X Deionized Water
- ___ Liquinox Solution
- ___ Hexane
- ___ HNO_3/D.I. Water Solution
- ___ Potable Water
- ___ None

Field Analysis Data

Ambient Air VOC Ø ppm Well Mouth Ø ppm Field Data Collected ___ In-line / X In Container

Sample Observations: X Turbid / ___ Clear / ___ Cloudy / ___ Colored / ___ Odor

Purge Data	@ 2.5 Gal.	@ ___ Gal.	@ ___ Gal.	@ 5 Gal.	@ 6 Gal.
Temperature, Deg. C	25.1	25.6	26.4	26.5	26.9
pH, units	6.45	6.46	6.47	6.54	6.52
Specific Conductivity	320	320	322	320	320
~~(umhos/cm @ 25 Deg. C)~~ NTU	99.1	117.1	113.3	109.3	107.0
Oxidation - Reduction, +/- mv	—	—	—	—	255.2
Dissolved Oxygen, ppm	—	—	—	—	2.4 mg/L

H_2S 0 mg/L
CO_2 60 mg/L
Cl^- 10 mg/L
Fe 0.4 mg/L
Fe^{2+} 0.2 mg/L
ALK (PTH) Ø
ALK 81.6 mg/L

Sample Collection Requirements (✓ If Required at this Location)

Analytical Parameter	✓ If Field Filtered	Preservation Method	Volume Required	✓ If Sample Collected	Sample Bottle IDs
VOA	___	HCL	___	___	___/___/___/___
SVOA	___	4OC	___	___	___/___/___/___
Pest/PCB	___	4OC	___	___	___/___/___/___
Inorganics	___	HNO_3	___	___	___/___/___/___
Explosives	___	4°C	___	___	___/___/___/___
TPH	___	H_2SO_4	___	___	___/___/___/___
TOC	___	H_2SO_4	___	___	___/___/___/___
Nitrate	___	H_2SO_4	___	___	___/___/___/___

Notes: ___

DEPARTMENT OF THE NAVY

SOUTHERN DIVISION
NAVAL FACILITIES ENGINEERING COMMAND
CHARLESTON, SC.

WELL CONSTRUCTION DETAIL

WELL NUMBER: OU-39-21 B

DATE OF INSTALLATION: 4-22/97

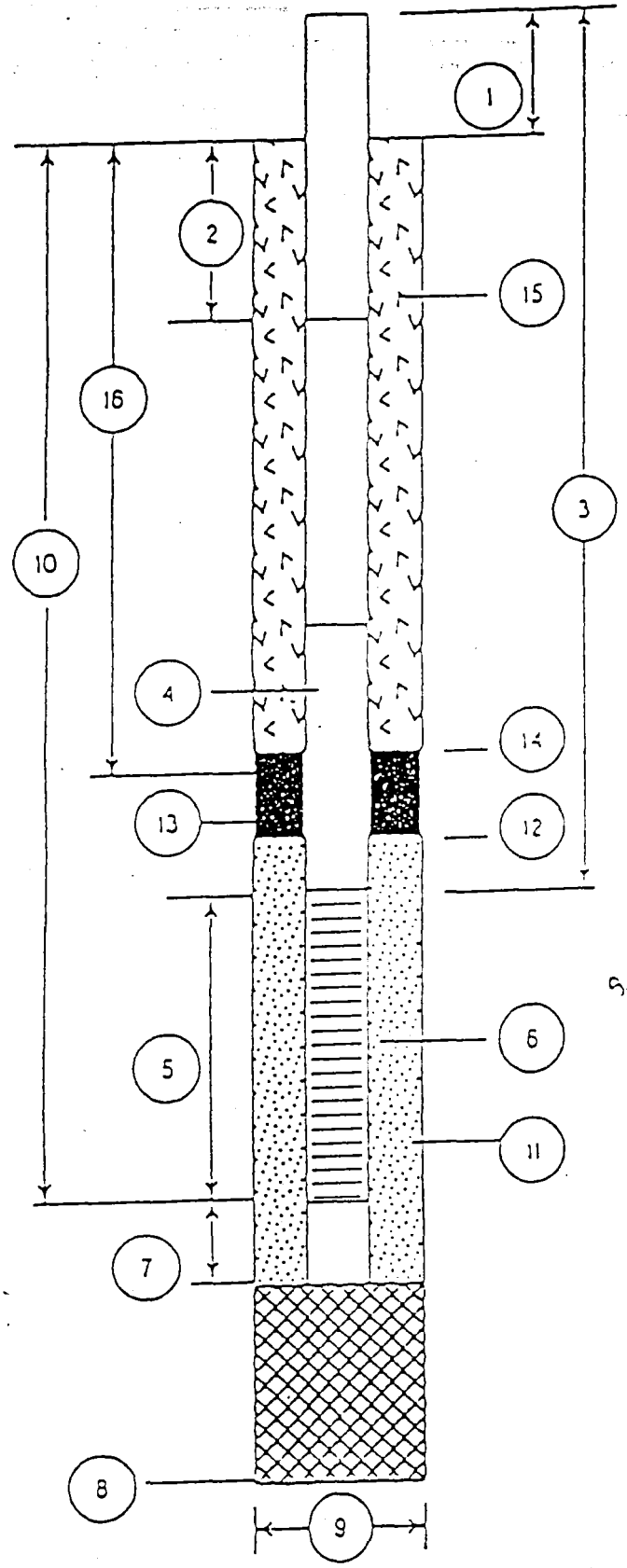

1. Height of Casing above ground: FM
2. Depth to first Coupling: 3'
   Coupling Interval Depths: 10'
3. Total Length of Riser Pipe: 23'
4. Type of Riser Pipe: 2" sched 40 PVC
5. Length of Screen: 5'
6. Type of Screen: 2" sched 40 PVC 0.010 slot
7. Length of Sump: 6"
8. Total Depth of Boring: 28.5
9. Diameter of Boring: 10"
10. Depth to Bottom of Screen: 28'
11. Type of Screen Filter: Silica Sand
    Quantity Used: 25 lb Size: 20/30
12. Depth to Top of Filter: 21'
13. Type of Seal: Fine Sand / Bentonite
    Quantity Used: 50 lb / 25 lb
14. Depth to Top of Seal: 17'
15. Type of Grout: Neat Cement
    Grout Mixture:
    94 lb Portland Cement / 8 lb Bentonite Gel / 8 gal water
    Method of Placement: Tremie
16. Tot. Depth of 6 in. Steel Casing: N/A

GROUNDWATER SAMPLE FIELD DATA

Project: NTC ORLANDO
Point of Interest: SA39
Project Number: 08545.10
Date: 5-19/97
Sample Location ID: OLD-39-21B
Time: Start: 1255 End: 1615
Signature of Sampler: WDO

Water Level/Well Data

Well Depth 27.20 Ft. — X Measured / ___ Historical — X Top of Well / ___ Top of Protective Casing

Well Riser Stick-up (from ground) NA Ft.

Protective Casing/Well Difference NA Ft.

Protective Casing NA Ft.

Depth to Water 14.04 Ft.

Well Material: X PVC / ___ SS

Well Locked?: X Yes / ___ No

Well Dia.: X 2 inch / ___ 4 inch / ___ 6 inch

Water Level Equip. Used: X Elect. Cond. Probe / ___ Float Activated / ___ Press. Transducer

Height of Water Column 13.16 Ft. X [X 1.6 Gal/Ft. (2 in.) / ___ 6.5 Gal/Ft. (4 in.) / ___ 1.5 Gal/Ft. (6 in.) / ___ Gal/Ft. (___ in.)] = [2.1 Gal/Vol / 15 Total Gal Purged]

Well Integrity: Prot. Casing Secure NA; Concrete Collar Intact; Other

	Yes	No
Prot. Casing Secure	NA	
Concrete Collar Intact		
Other		

Equipment Documentation

Purging/Sampling Equipment Used:

(✓ If Used For) Purging	Sampling		Equipment ID
X	X	Peristaltic Pump	
		Submersible Pump	
		Bailer	
		PVC/Silicon Tubing	
X	X	Teflon/~~Silicon~~ Tubing	
		Auger	
		Hand Pump	
		In-line Filter	
		Press/Vac Filter	

Decontamination Fluids Used: (✓ All That Apply at Location)

- ___ Methanol (100%)
- ___ 25% Methanol/75% ASTM Type II water
- X Deionized Water
- ___ Liquinox Solution
- ___ Hexane
- ___ HNO_3/D.I. Water Solution
- ___ Potable Water
- ___ None

Field Analysis Data

Ambient Air VOC Ø ppm Well Mouth Ø ppm

Field Data Collected: ___ In-line / X In Container

Sample Observations: X Turbid / ___ Clear / ___ Cloudy / ___ Colored / ___ Odor

Purge Data	@ 5 Gal.	@ 7.5 Gal.	@ 10 Gal.	@ 12.5 Gal.	@ 15 Gal.
Temperature, Deg. C	26.4	26.3	25.9	26.1	26.3
pH, units	5.60	5.65	5.59	5.62	5.59
Specific Conductivity	185	185	182	182	182
~~(umhos/cm @ 25 Deg. C)~~ NTU	127.0	113.0	106.3	96.3	91.1
Oxidation - Reduction, +/- mv	—	—	—	—	10.7
Dissolved Oxygen, ~~ppm~~	—	—	—	—	3.0 mg/l

Fe 0.7 mg/l
Fe^{2+} 0.6 mg/l
H_2S 0.7 mg/l
Cl^- 15 mg/l
CO_2 80 mg/l
ALK (pH4) Ø
ALK 50 mg/l

Sample Collection Requirements (✓ If Required at this Location)

Analytical Parameter	✓ If Field Filtered	Preservation Method	Volume Required	✓ If Sample Collected	Sample Bottle IDs
VOA		HCL			/ / /
SVOA		4OC			/ / /
Pest/PCB		4OC			/ / /
Inorganics		HNO_3			/ / /
Explosives		4°C			/ / /
~~TOC~~		H_2SO_4			/ / /
~~TOC~~		H_2SO_4			/ / /
Nitrate		H_2SO_4			/ / /

Notes:

SOIL BORING LOG

			Point of Interest: SA -39
			Boring No.: OLD-39-22
Client: South Div	Project No. 08545.10		Protection: D
Contractor: CDS	Date Started: 4-28/97		Completed: 5-2/97
Method: HSA/Rotary	Casing Size: 15" /6"		PI Meter: Porta FID
Ground Elev.:	Soil Drilled: 40'		Total Depth: 40'
Logged by: WDG	Checked by:		▽ Below Ground:
Screen: 5 (ft.)	Riser: (ft.)	Diam: 2" (ID)	Material: PVC
			Page 1 of: 2

DEPTH (FT)	SAMPLE NUMBER	SAMPLE DEPTH	CLP/SCREENING	RECOVERY	PID (ppm)	SOIL/ROCK DESCRIPTION	SOIL CLASS	BLOWS/6-IN.	WELL DATA	LITHOLOGY	ELEVATION (FT.)
1				NA	Ø	Brown fine Sand w/Silt	SM				
2						gray fine Sand					
3				NA	Ø						
4											
5				90	Ø		SP				
6											
7				90	Ø						
8											
9				70	Ø	brown Fine Sand	SP				
10						Tan Fine Sand	SP				
11				50	Ø						
12						WHITE FINE SAND	SP				
13				50	Ø						
14						Brown Fine Sand	SP				
15				50	Ø	TAN FINE Sand	SP				
16											
17				60	Ø						
18											
19						Dark gray Fine Sand, trace med.	SP				
20											
21				80	Ø						
22											
23				90	Ø	See below					
24											

PROPORTIONS	(-) AMOUNT (-)	ABBREVIATIONS		
Trace (tr)	0-10%	f = fine	gr = gray	MS = Split Spoon
Little (li)	10-20%	m = medium	bn = brown	SW = Screened Auger
Some (so)	20-35%	c = coarse	blk = black	HP = Hydropunch
and	35-50%			

SOIL BORING LOG

		Point of Interest:	SA-39
		Boring No.:	OLD-39-22
Client: South Div	Project No. 08545.10	Protection:	D
Contractor: CDS	Date Started: 4-28/97	Completed:	5-2/97
Method: HSA/Rotary	Casing Size: 15"/6"	PI Meter:	Photo FID
Ground Elev.:	Soil Drilled: 40'	Total Depth:	40'
Logged by: WDO	Checked by:	▽ Below Ground:	
Screen: 5 (ft.)	Riser: (ft.)	Diam: 2 (ID)	Material: PVC
		Page 2	of: 2

DEPTH (FT)	SAMPLE NUMBER	SAMPLE DEPTH	CLP/SCREENING	RECOVERY	PID (ppm)	SOIL/ROCK DESCRIPTION	SOIL CLASS	BLOWS/6-IN.	WELL DATA	LITHOLOGY	ELEVATION (FT.)
26				90	Ø	brown fine sand w/silt		15, 19, 9			
27				90	Ø	gray sand lens @ 25.5'		26, 50			
28						Silty dark brown lens @ 28'	SM	–			
29				90	Ø	brown sandy clay in spoon		2, 4, 7			
30						Shee @ 30'		9, 7			
31				90	Ø	dark gray clay, hard	CL	12, 22, 30			
32						dark brown sandy clay, stiff slightly plastic	SC	5			
33				80	Ø	brown fine sand w/silt	SM	4, 5			
34						dark brown clayey sand, stiff	SC	5, 4, 5			
35				50	Ø			5, 6			
36						Tan medium and fine sand	SP	6, 7, 9, 11			
37				50	Ø			13, 9			
38								12, 14			
39				50	Ø			16			
40											

PROPORTIONS	(-) AMOUNT (-)	ABBREVIATIONS		
Trace (tr)	0-10%	f = fine	gr = gray	MS = Split Spoon
Little (li)	10-20%	m = medium	bn = brown	SW = Screened Auger
Some (so)	20-35%	c = coarse	blk = black	HP = Hydropunch
and	35-50%			

DEPARTMENT OF THE NAVY

SOUTHERN DIVISION
NAVAL FACILITIES ENGINEERING COMMAND
CHARLESTON, SC

WELL CONSTRUCTION DETAIL

WELL NUMBER: OLD-39-22C

DATE OF INSTALLATION: 5-2/9

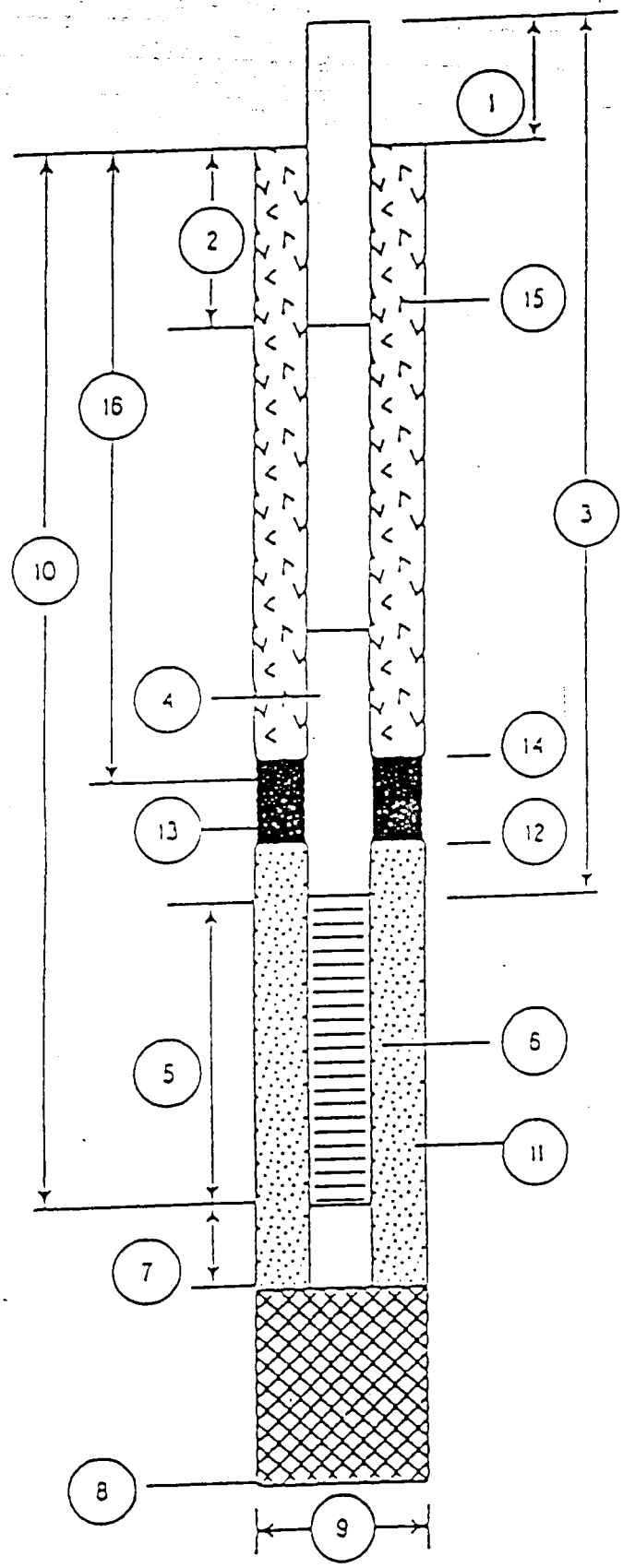

1. Height of Casing above ground: FM
2. Depth to first Coupling: 5

   Coupling Interval Depths: 10
3. Total Length of Riser Pipe: 35
4. Type of Riser Pipe: 2" Sched 40 PVC
5. Length of Screen: 5'
6. Type of Screen: 2" Sched 40 PVC 0.010 Slot
7. Length of Sump: 6"
8. Total Depth of Boring: 40'
9. Diameter of Boring: 14"/6"
10. Depth to Bottom of Screen: 40'
11. Type of Screen Filter: Silica Sand

    Quantity Used: 7516 Size: 20/30
12. Depth to Top of Filter: 33'
13. Type of Seal: fine Sand/Bentonite

    Quantity Used: 25/30
14. Depth to Top of Seal: 29'
15. Type of Grout: Neat Cement

    Grout Mixture:

    Method of Placement: Tremie
16. Tot. Depth of 6 in. ~~Steel~~ PVC Casing: 31'

GROUNDWATER SAMPLE FIELD DATA

Project: NTC ORLANDO
Point of Interest: SA39
Project Number: 08545.10
Date: 5-19-97
Sample Location ID: OLD-39-22C
Time: Start: 0855 End: 1230
Signature of Sampler: [signature]

Water Level/Well Data

Well Depth 39.70 Ft. — X Measured / ___ Historical — X Top of Well / ___ Top of Protective Casing

Well Riser Stick-up (from ground) NA Ft.

Protective Casing/Well Difference NA Ft.

Protective Casing NA Ft.

Depth to Water 14.35 Ft.

Well Material: X PVC / ___ SS

Well Locked?: X Yes / ___ No

Well Dia. X 2 inch / ___ 4 inch / ___ 6 inch

Water Level Equip. Used: X Elect. Cond. Probe / ___ Float Activated / ___ Press. Transducer

Height of Water Column 25.35 Ft. X [X .16 Gal/Ft. (2 in.) / ___ .65 Gal/Ft. (4 in.) / ___ 1.5 Gal/Ft. (6 in.) / ___ Gal/Ft. (___ in.)] = 4.06 Gal/Vol; 20 Total Gal Purged

Well Integrity: Prot. Casing Secure / Concrete Collar Intact / Other — Yes ___ / No ___ (NA)

Equipment Documentation

Purging/Sampling Equipment Used:

(✓ If Used For) Purging	Sampling		Equipment ID
X	X	Peristaltic Pump	
		Submersible Pump	
		Bailer	
		PVC/Silicon Tubing	
X	X	Teflon/Silicon Tubing	
		Airlift	
		Hand Pump	
		In-line Filter	
		Press/Vac Filter	

Decontamination Fluids Used: (✓ All That Apply at Location)

- ___ Methanol (100%)
- ___ 25% Methanol/75% ASTM Type II water
- X Deionized Water
- ___ Liquinox Solution
- ___ Hexane
- ___ HNO_3/D.I. Water Solution
- ___ Potable Water
- ___ None

Field Analysis Data

Ambient Air VOC 0 ppm Well Mouth 0 ppm

Field Data Collected: ___ In-line / X In Container

Sample Observations: ___ Turbid / ___ Colored / ___ Clear / X Cloudy / ___ Odor

Purge Data	@ 15 Gal.	@ ___ Gal.	@ ___ Gal.	@ ___ Gal.	@ 20 Gal.
Temperature, Deg. C	26.2	25.9	26.3	25.7	25.7
pH, units	6.00	5.88	5.79	5.78	5.74
Specific Conductivity	140	132	132	125	120
(~~mmhos/cm @ Deg. C~~) NTU	50.0	47.6	43.6	41.6	43.2
Oxidation - Reduction, +/- mv	—	—	—	—	58.5
Dissolved Oxygen, ~~mg/L~~	—	—	—	—	0.34 mg/L

H_2S 2.0 mg/L
Fe 0.8 mg/L
Fe^{2+} 0.7 mg/L
ALK (PH) 0
ALK 51 mg/L
Cl^- 15 mg/L
CO_2 40 mg/L

Sample Collection Requirements (✓ If Required at this Location)

Analytical Parameter	✓ If Field Filtered	Preservation Method	Volume Required	✓ If Sample Collected	Sample Bottle IDs
VOA		HCL			/ / /
SVOA		4OC			/ / /
Pest/PCB		4OC			/ / /
Inorganics		HNO_3			/ / /
Explosives		4°C			/ / /
TPH		H_2SO_4			/ / /
TOC		H_2SO_4			/ / /
Nitrate		H_2SO_4			/ / /

Notes:

DEPARTMENT OF THE NAVY

SOUTHERN DIVISION
NAVAL FACILITIES ENGINEERING COMMAND
CHARLESTON, SC.

WELL CONSTRUCTION DETAIL

WELL NUMBER: OLD-39-23A

DATE OF INSTALLATION: 4-21/97

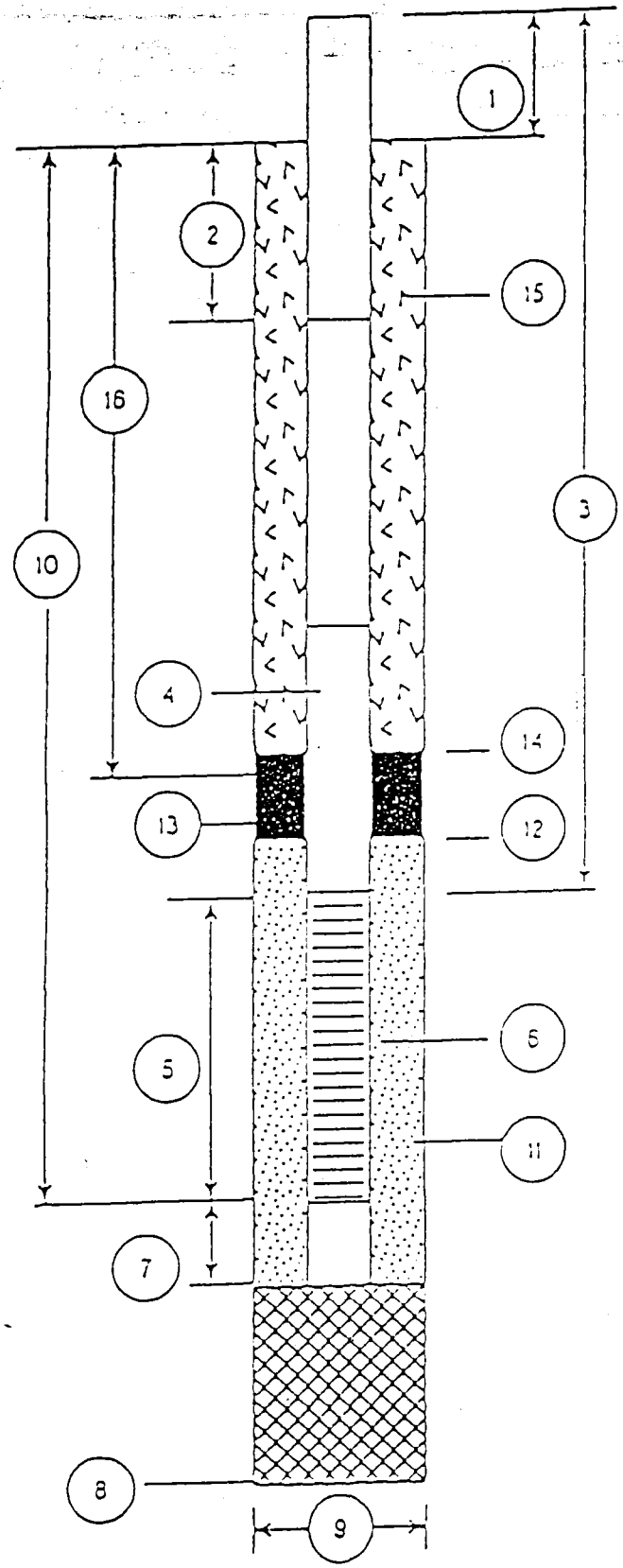

1. Height of Casing above ground: FM
2. Depth to first Coupling: 7'

   Coupling Interval Depths: NA
3. Total Length of Riser Pipe: 7'
4. Type of Riser Pipe: 2" sched. 40 PVC
5. Length of Screen: 10'
6. Type of Screen: 2" sched 40 PVC 0.010 slot
7. Length of Sump: 6"
8. Total Depth of Boring: 17'.5
9. Diameter of Boring: 10"
10. Depth to Bottom of Screen: 17'
11. Type of Screen Filter: Silica Sand

    Quantity Used: 50 lb Size: 20/30
12. Depth to Top of Filter: 2
13. Type of Seal: Fine Sand/Bentonite

    Quantity Used: 5 lb / 25 lb
14. Depth to Top of Seal: 2'
15. Type of Grout: Neat cement

    Grout Mixture:

    Method of Placement: Pour
16. Tot. Depth of 6 in. Steel Casing: NA

GROUNDWATER SAMPLE FIELD DATA

Project: NTC ORLANDO
Point of Interest: SA 39
Project Number: 08545.10
Date: 5-14/97
Sample Location ID: OLD-39-23A
Time: Start: 1310 End: 1520
Signature of Sampler: [signature]

Water Level/Well Data

Well Depth 17.00 Ft. X Measured ___ Historical

X Top of Well ___ Top of Protective Casing ___ ___

Well Riser Stick-up (from ground) NA Ft.

Protective Casing/Well Difference NA Ft.

Protective Casing NA Ft.

Depth to Water 12.65 Ft.

Well Material: X PVC ___ SS ___

Well Locked?: X Yes ___ No

Well Dia. X 2 inch ___ 4 inch ___ 6 inch ___ ___

Water Level Equip. Used: X Elect. Cond. Probe ___ Float Activated ___ Press. Transducer ___ ___

Height of Water Column 4.35 Ft. X X .16 Gal/Ft. (2 in.) ___ .65 Gal/Ft. (4 in.) ___ 1.5 Gal/Ft. (6 in.) ___ ___ Gal/Ft. (___ in.) = 0.7 Gal/Vol; 4 Total Gal Purged

Well Integrity: Yes / No
Prot. Casing Secure: Yes
Concrete Collar Intact: Yes
Other: ___

Equipment Documentation

Purging/Sampling Equipment Used:

(✓ If Used For) Purging	Sampling		Equipment ID
X	X	Peristaltic Pump	
		Submersible Pump	
		Bailer	
		PVC/Silicon Tubing	
X	X	Teflon/Silicon Tubing	
		Airlift	
		Hand Pump	
		In-line Filter	
		Press/Vac Filter	

Decontamination Fluids Used: (✓ All That Apply at Location)

- ___ Methanol (100%)
- ___ 25% Methanol/75% ASTM Type II water
- X Deionized Water
- ___ Liquinox Solution
- ___ Hexane
- ___ HNO_3/D.I. Water Solution
- ___ Potable Water
- ___ None
- ___ ___

Field Analysis Data

Ambient Air VOC Ø ppm Well Mouth Ø ppm

Field Data Collected: ___ In-line X In Container

Sample Observations: ___ Turbid X Clear ___ Cloudy ___ Colored ___ Odor

Purge Data	@ 2.0 Gal.	@ 2.5 Gal.	@ 3 Gal.	@ 3.5 Gal.	@ 4 Gal.
Temperature, Deg. C	26.4	26.2	26.9	26.9	27.5
pH, units	6.46	6.43	6.48	6.43	6.48
Specific Conductivity (umhos/cm. @ 25 Deg. C.)	448	446	430	425	430
Oxidation - Reduction, +/- mv					135
Dissolved Oxygen, ppm					3.68 (Winkler)

Fe 0.1 mg/l
Fe^{2+} < 0.1 mg/l
H_2S 0.3 mg/l
Cl^- 20 mg/l
CO_2 12.5 mg/l
Alk Ph 0 mg/l
Alk total 170 mg/l

Sample Collection Requirements (✓ If Required at this Location)

Analytical Parameter	✓ If Field Filtered	Preservation Method	Volume Required	✓ If Sample Collected	Sample Bottle IDs
VOA		HCL			/ / /
SVOA		4°C			/ / /
Pest/PCB		4°C			/ / /
Inorganics		HNO_3			/ / /
Explosives		4°C			/ / /
TPH		H_2SO_4			/ / /
TOC		H_2SO_4			/ / /
Nitrate		H_2SO_4			/ / /

Notes: ___

DEPARTMENT OF THE NAVY

SOUTHERN DIVISION
NAVAL FACILITIES ENGINEERING COMMAND
CHARLESTON, SC.

WELL CONSTRUCTION DETAIL

WELL NUMBER: OLD-39-24B

DATE OF INSTALLATION: 4-22/97

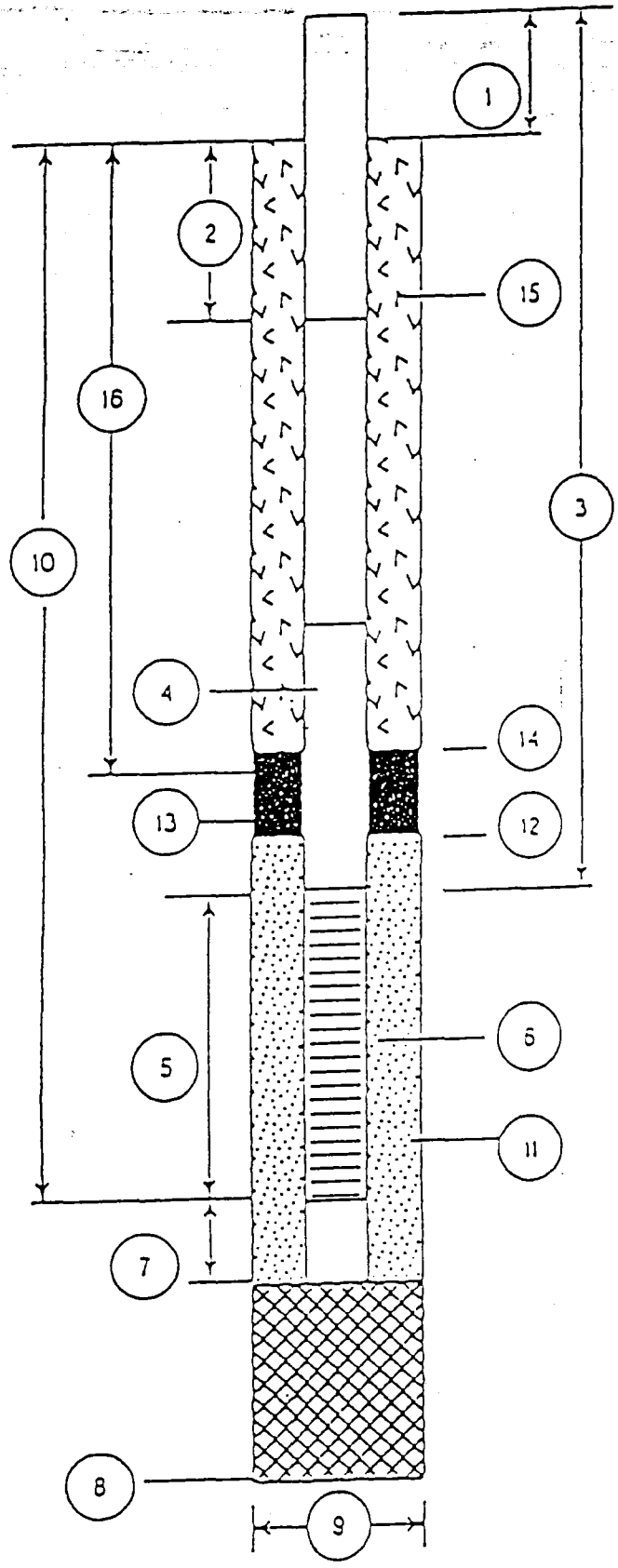

1. Height of Casing above ground: FM
2. Depth to first Coupling: 3'
   Coupling Interval Depths: 10'
3. Total Length of Riser Pipe: 23'
4. Type of Riser Pipe: 2" sched. 40 PVC
5. Length of Screen: 5'
6. Type of Screen: 2" sched. 40 PVC 0.010 Slot
7. Length of Sump: 6"
8. Total Depth of Boring: 28.5'
9. Diameter of Boring: 10"
10. Depth to Bottom of Screen: 28'
11. Type of Screen Filter: Silica Sand
    Quantity Used: 300 lb Size: 20/30
12. Depth to Top of Filter: 21'
13. Type of Seal: Fine Sand / Bentonite
    Quantity Used: 50 lb / 25 lb
14. Depth to Top of Seal: 17'
15. Type of Grout: Neat cement
    Grout Mixture: 94 lb Portland cement / 8 lb Bentonite gel / 8 gal. water
    Method of Placement: tremie
16. Tot. Depth of 6 in. Steel Casing: NA

GROUNDWATER SAMPLE FIELD DATA

Project: NTC ORLANDO
Point of Interest: SA 39
Project Number: 08545.10
Date: 5-14/97
Sample Location ID: OLD-39-24B
Time: Start: 1545 End: 1900
Signature of Sampler: W. [illegible] P. Olson

Water Level/Well Data

Well Depth 27.00 Ft. X Measured ___ Historical — X Top of Well ___ Top of Protective Casing ___ ___

Well Riser Stick-up (from ground) NA Ft.

Protective Casing/Well Difference NA Ft.

Protective Casing NA Ft.

Depth to Water 12.54 Ft.

Well Material: X PVC ___ SS ___

Well Locked?: X Yes ___ No

Well Dia. X 2 inch ___ 4 inch ___ 6 inch ___ ___

Water Level Equip. Used: X Elect. Cond. Probe ___ Float Activated ___ Press. Transducer ___ ___

Height of Water Column 14.46 Ft. X X .16 Gal/Ft. (2 in.) ___ .65 Gal/Ft. (4 in.) ___ 1.5 Gal/Ft. (6 in.) ___ ___ Gal/Ft. (___ in.) = 2.31 Gal/Vol; 10 Total Gal Purged

Well Integrity:	Yes	No
Prot. Casing Secure	✓	
Concrete Collar Intact	✓	
Other	✓	

Equipment Documentation

Purging/Sampling Equipment Used:

(✓ If Used For) Purging	Sampling		Equipment ID
X	X	Peristaltic Pump	
		Submersible Pump	
		Bailer	
		PVC/Silicon Tubing	
X	X	Teflon/~~Silicon~~ Tubing	
		Airlift	
		Hand Pump	
		In-line Filter	
		Press/Vac Filter	

Decontamination Fluids Used: (✓ All That Apply at Location)

- ___ Methanol (100%)
- ___ 25% Methanol/75% ASTM Type II water
- X Deionized Water
- ___ Liquinox Solution
- ___ Hexane
- ___ HNO_3/D.I. Water Solution
- ___ Potable Water
- ___ None
- ___ ___

Field Analysis Data

Ambient Air VOC Ø ppm Well Mouth Ø ppm Field Data Collected ___ In-line X In Container

Sample Observations: X Turbid ___ Clear ___ Cloudy ___ Colored ___ Odor

Purge Data	@ 0.5 Gal.	@ 2.5 Gal.	@ 5 Gal.	@ 7.5 Gal.	@ 10 Gal.
Temperature, Deg. C	27.4	27.2	25.7	26.2	25.7
pH, units	5.51	5.44	5.50	5.33	5.49
Specific Conductivity (umhos/cm. @ 25 Deg. C)	260	260	258	260	255
Oxidation - Reduction, +/- mv					10.8
Dissolved Oxygen, ppm					1.5 mg/l (mg/L)

Sample Collection Requirements (✓ If Required at this Location)

Analytical Parameter	✓ If Field Filtered	Preservation Method	Volume Required	✓ If Sample Collected	Sample Bottle IDs
VOA		HCL			/ / /
SVOA		4OC			/ / /
Pest/PCB		4OC			/ / /
Inorganics		HNO_3			/ / /
Explosives		4°C			/ / /
TPH		H_2SO_4			/ / /
TOC		H_2SO_4			/ / /
Nitrate		H_2SO_4			/ / /

Notes:

Fe - 0.5 mg/l
Fe^{2+} - 0.8 mg/l
H_2S 5 mg/l
Cl^- - 30 mg/l
CO_2 ___

ALK-(Pth) Ø
ALK - total 34 mg/l

SOIL BORING LOG

Client: South Div	Project No. 08545.10		Point of Interest: SA 39
			Boring No.: 06D-39-2S
Contractor: CDS	Date Started: 4-24/97		Protection: D
Method: HSA/Rotary	Casing Size: 15" / 6"		Completed: 5-2/97
Ground Elev.:	Soil Drilled: 40'		PI Meter: PortaFID
Logged by: WDO	Checked by:		Total Depth: 40'
			Below Ground:
Screen: 5 (ft.)	Riser: 35 (ft.)	Diam: 2" (ID)	Material: PVC
			Page 1 of: 2

DEPTH (FT)	SAMPLE NUMBER	SAMPLE DEPTH	GLYS/SCHEL/HXQ	RECOVERY	FID (ppm)	SOIL/ROCK DESCRIPTION	SOIL CLASS	BLOWS/6-IN.	WELL DATA	LITHOLOGY	ELEVATION (FT.)
1				NA	Ø	Off white Fine Sand, damp @ 10', some mottling at 12', grades to m	SP	P C S T H C E 2 3 6 7 5 3 5 7 3 2 4 7 4 5 5 3 5 6 3 3 7 11 12 13 6 6 5 2 3 4 7 7 15 9 2 7 20 3 1 4 2			
2											
3				NA	Ø						
4											
5				60	Ø						
6											
7				70	Ø						
8											
9				80	Ø						
10											
11				80	Ø						
12											
13				70	Ø						
14						Light Brown Fine Sand w/trace silt, grades to darker brown @ 14.5ft. gray brown after 20' dense red brown sand and 24ft	SW				
15				90	Ø						
16											
17				80	Ø						
18											
19				90	Ø						
20											
21				60	Ø						
22											
23				60	Ø						
24						see below					

PROPORTIONS	(-) AMOUNT (-)	ABBREVIATIONS		
Trace (tr)	0-10%	f = fine	gr = gray	MS = Split Spoon
Little (li)	10-20%	m = medium	bn = brown	SW = Screened Auger
Some (so)	20-35%	c = coarse	blk = black	HP = Hydropunch
and	35-50%			

SOIL BORING LOG

Client: South DIV	Project No. 08545.10		Point of Interest: SA39
			Boring No.: OLD-39-25
Contractor: CDS	Date Started: 4-24/97		Protection: D
Method: HSA/Rotary	Casing Size: 15" / 6"		Completed: 5-2/97
Ground Elev.:	Soil Drilled: 40'		PI Meter: Porta FID
Logged by: WDO	Checked by:		Total Depth: 40'
			▽ Below Ground:
Screen: 5 (ft.)	Riser: 35 (ft.)	Diam: 2" (ID)	Material: PVC

Page 2 of: 2

DEPTH (FT)	SAMPLE NUMBER	SAMPLE DEPTH	CLP/SCREENING	RECOVERY	PID (ppm)	SOIL/ROCK DESCRIPTION	SOIL CLASS	BLOWS/6-IN.	WELL DATA	LITHOLOGY	ELEVATION (FT.)
26				80	Ø	Tan fine sand w/white fine sand lens @ 28 ft.	SP	25, 1, 12, 14, 16, 12, 6			
27				70	Ø						
28											
29				80	Ø	Brown sandy clay, stiff.	SC	12, 15, 12			
30						Off white medium sand w/shell mat.	SP	3, 1, 4			
31				70	Ø	Stiff silty clay, gray, hard, non plastic, trace medium sand sandier w/depth	CL	5, 10, 8, 17			
32											
33				80	Ø	off white fine sand, some medium, silty lens @ 37' increased silt after 39'	SP	21, 21, 4, 6, 10, 11, 6, 12			
34											
35				50	Ø						
36											
37				80	Ø						
38								15, 14, 10			
39				60	Ø			9, 11, 18			
40											

PROPORTIONS	(-) AMOUNT (-)	ABBREVIATIONS		
Trace (tr)	0-10%	f = fine	gr = gray	MS = Split Spoon
Little (li)	10-20%	m = medium	bn = brown	SW = Screened Auger
Some (so)	20-35%	c = coarse	blk = black	HP = Hydropunch
and	35-50%			

DEPARTMENT OF THE NAVY

SOUTHERN DIVISION
NAVAL FACILITIES ENGINEERING COMMAND
CHARLESTON, SC.

WELL CONSTRUCTION DETAIL

WELL NUMBER: OLD-39-25C

DATE OF INSTALLATION: 5-2/...

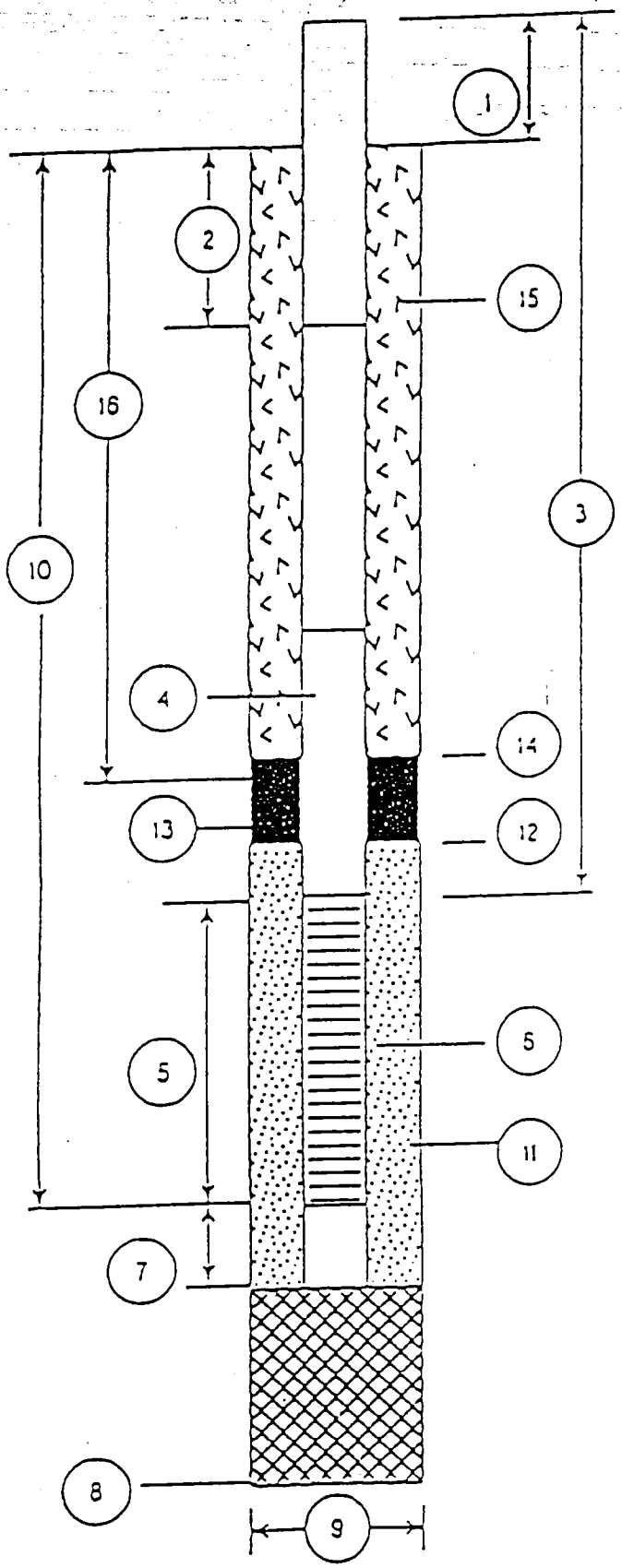

1. Height of Casing above ground: FM
2. Depth to first Coupling: 5'
   Coupling Interval Depths: 10'
3. Total Length of Riser Pipe: 35'
4. Type of Riser Pipe: 2" sched. 40 PVC
5. Length of Screen: 5'
6. Type of Screen: 2" sched 40 PVC 0.010 slot
7. Length of Sump: 6"
8. Total Depth of Boring: 40'
9. Diameter of Boring: 14"/6"
10. Depth to Bottom of Screen: 40'
11. Type of Screen Filter: Silica Sand
    Quantity Used: 75 lb Size: 20/30
12. Depth to Top of Filter: 33'
13. Type of Seal: Fine Sand / Bentonite
    Quantity Used: 25/30 lb
14. Depth to Top of Seal: 29'
15. Type of Grout: Neat cement
    Grout Mixture:
    Method of Placement: tremie
16. Tot. Depth of 6 in ~~Steel~~ PVC Casing: 31'

GROUNDWATER SAMPLE FIELD DATA

Project: NTC ORLANDO
Project Number: 08545.10
Sample Location ID: OLD-39-25C
Time: Start: 0830 End: 1215

Point of Interest: SA39
Date: 5-15/97
Signature of Sampler: [signature]

Water Level/Well Data

Well Depth 39.62 Ft. — X Measured ___ Historical — X Top of Well ___ Top of Protective Casing ___ ___

Well Riser Stick-up (from ground) NA Ft.

Protective Casing/Well Difference NA Ft.

Protective Casing NA Ft.

Depth to Water 12.67 Ft.

Well Material: X PVC ___ SS ___

Well Locked?: X Yes ___ No

Well Dia. X 2 inch ___ 4 inch ___ 6 inch ___ ___

Water Level Equip. Used: X Elect. Cond. Probe ___ Float Activated ___ Press. Transducer ___ ___

Height of Water Column 26.95 Ft. X X .16 Gal/Ft. (2 in.) ___ .65 Gal/Ft. (4 in.) ___ 1.5 Gal/Ft. (6 in.) ___ ___ Gal/Ft. (___ in.) = 4.3 Gal/Vol; 18 Total Gal Purged

Well Integrity: Prot. Casing Secure ___ ___; Concrete Collar Intact NA ___ ___; Other ___ ___ ___

Equipment Documentation

Purging/Sampling Equipment Used:

(✓ If Used For) Purging	Sampling		Equipment ID
X	X	Peristaltic Pump	
		Submersible Pump	
		Bailer	
		PVC/Silicon Tubing	
X	X	Teflon/Silicon Tubing	
		Airlift	
		Hand Pump	
		[illegible]	
		Press/Vac Filter	

Decontamination Fluids Used: (✓ All That Apply at Location)

___ Methanol (100%)
___ 25% Methanol/75% ASTM Type II water
X Deionized Water
___ Liquinox Solution
___ Hexane
___ HNO_3/D.I. Water Solution
___ Potable Water
___ None

Field Analysis Data

Ambient Air VOC 0 ppm Well Mouth 0 ppm Field Data Collected ___ In-line X In Container

Sample Observations: ___ Turbid X Clear ___ Cloudy ___ Colored ___ Odor

Purge Data	@ ___ Gal.	@ ___ Gal.	@ 15 Gal.	@ ___ Gal.	@ 18 Gal.
Temperature, Deg. C	24.7	25.1	24.7	25.1	25.0
pH, units	6.04	5.92	5.90	5.91	5.91
Specific Conductivity	360	348	345	340	339
~~(umhos/cm @ 25 Deg. C)~~					
~~Oxidation Reduction, +/- mv~~					
~~Dissolved Oxygen, ppm~~ NTU	26.6	22.1	18.32	16.86	14.74

Redox: 17.3 mV
H_2S: 2.0 mg/l
Fe: 1.0 mg/l
Cl^-: 45 mg/l
DO: 0.75 mg/l
ALK (PH): 0 mg/l
ALK: 50 mg/l
CO_2: 80 mg/l
Fe^{2+}: 0.8 mg/l

Sample Collection Requirements (✓ If Required at this Location)

Analytical Parameter	✓ If Field Filtered	Preservation Method	Volume Required	✓ If Sample Collected	Sample Bottle IDs
VOA		HCL	3 x 40ml		/ / /
~~SVOA~~		4OC			/ / /
Pest/PCB		4OC			/ / /
Inorganics		HNO_3			/ / /
Explosives		4°C			/ / /
~~TPH~~		H_2SO_4			/ / /
~~TOC~~		H_2SO_4	1 x 250ml		/ / /
Nutrients		H_2SO_4	1 x 1l		/ / /

Notes: ___

DEPARTMENT OF THE NAVY

SOUTHERN DIVISION
NAVAL FACILITIES ENGINEERING COMMAND
CHARLESTON, SC.

WELL CONSTRUCTION DETAIL

WELL NUMBER: OLD-39-26C

DATE OF INSTALLATION: 5-1/9

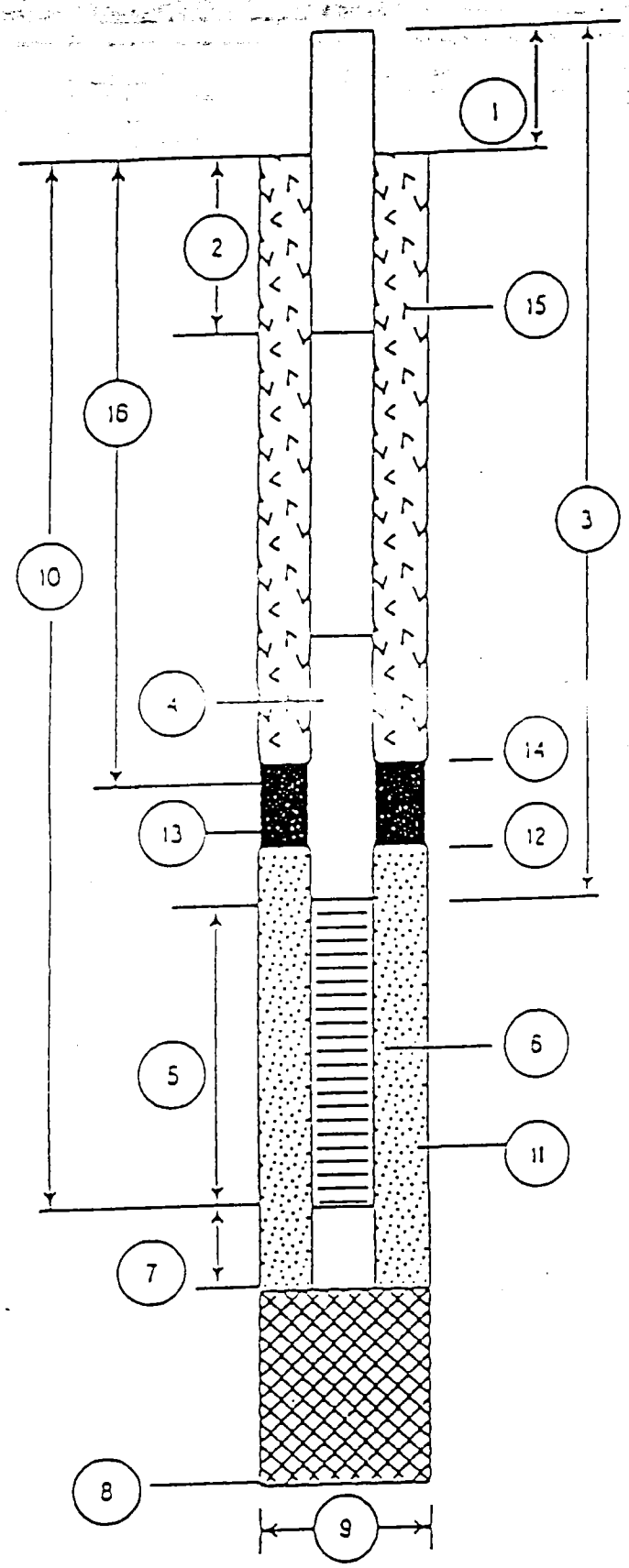

1. Height of Casing above ground: FM
2. Depth to first Coupling: 5'
   Coupling Interval Depths: 10'
3. Total Length of Riser Pipe: 35'
4. Type of Riser Pipe: 2" sched 40 PVC
5. Length of Screen: 5'
6. Type of Screen: 2" sched 40 PVC 0.010 Slot
7. Length of Sump: 6"
8. Total Depth of Boring: 40'
9. Diameter of Boring: 14"/6"
10. Depth to Bottom of Screen: 40'
11. Type of Screen Filter: Silica Sand
    Quantity Used: 75 lb Size: 20/30
12. Depth to Top of Filter: 33'
13. Type of Seal: fine sand/Bentonite
    Quantity Used: 25/30 lb
14. Depth to Top of Seal: 29'
15. Type of Grout: Neat Cement
    Grout Mixture:
    Method of Placement: Tremie
16. Tot. Depth of 6 in ~~Steel~~ PVC Casing: 31'

GROUNDWATER SAMPLE FIELD DATA

Project: NTC ORLANDO
Point of Interest: SA 39
Project Number: 08545.10
Date: 5-15/97
Sample Location ID: OLD-39-26C
Time: Start: 1305 End: 1535
Signature of Sampler: [signature]

Water Level/Well Data

Well Depth ~~12.74~~ 39.80 Ft. — X Measured ___ Historical — X Top of Well ___ Top of Protective Casing

Well Riser Stick-up (from ground) NA Ft. — Protective Casing/Well Difference NA Ft. — Protective Casing NA Ft.

Depth to Water 12.74 Ft.

Well Material: X PVC ___ SS

Well Locked?: X Yes ___ No

Well Dia.: X 2 inch ___ 4 inch ___ 6 inch

Water Level Equip. Used: X Elect. Cond. Probe ___ Float Activated ___ Press. Transducer

Height of Water Column 27.06 Ft. X X .16 Gal/Ft. (2 in.) ___ .65 Gal/Ft. (4 in.) ___ 1.5 Gal/Ft. (6 in.) ___ Gal/Ft. (__ in.) = 4.32 Gal/Vol; 19 Total Gal Purged

Well Integrity: Prot. Casing Secure — Yes ___ No ___; Concrete Collar Intact — NA; Other ___

Equipment Documentation

Purging/Sampling Equipment Used:

(✓ If Used For) Purging	Sampling		Equipment ID
X	X	Peristaltic Pump	
		Submersible Pump	
		Bailer	
		PVC/Silicon Tubing	
X	X	Teflon/Silicon Tubing	
		Airlift	
		Hand Pump	
		In-line Filter	
		Press/Vac Filter	

Decontamination Fluids Used: (✓ All That Apply at Location)

- ___ Methanol (100%)
- ___ 25% Methanol/75% ASTM Type II water
- X Deionized Water
- ___ Liquinox Solution
- ___ Hexane
- ___ HNO_3/D.I. Water Solution
- ___ Potable Water
- ___ None

Field Analysis Data

Ambient Air VOC 0 ppm Well Mouth 0 ppm Field Data Collected ___ In-line X In Container

Sample Observations: ___ Turbid X Clear ___ Cloudy ___ Colored ___ Odor

Purge Data @ ___ Gal.	@ 15 Gal.	@ ___ Gal.	@ ___ Gal.	@ 19 Gal.
Temperature, Deg. C 26.5	26.3	25.8	25.8	25.9
pH, units 5.76	5.63	5.60	5.65	5.60
Specific Conductivity 105	102	100	100	98
~~Turbidity @ 25 Deg. C~~ NTU 41.2	31.5	29.4	26.9	24.9
Oxidation - Reduction, +/- mv				-22.7
Dissolved Oxygen, ~~ppm~~ mg/L				0.61

Fe^{2+} - 0.6 mg/L
H_2S - 2.0 mg/L
Cl^2 - 15 mg/L
Fe 0.8 mg/L
CO_2 50 mg/L
ALK (PH) = 0
ALK = 34 mg/L

Sample Collection Requirements (✓ as Required at this Location)

Analytical Parameter	✓ If Field Filtered	Preservation Method	Volume Required	✓ If Sample Collected	Sample Bottle IDs
VOA		HCL			/ / /
SVOA		4OC			/ / /
Pest/PCB		4OC			/ / /
Inorganics		HNO_3			/ / /
Explosives		4°C			/ / /
TPH		H_2SO_4			/ / /
TOC		H_2SO_4			/ / /
Nitrate		H_2SO_4			/ / /

Notes: ___