N00236.001297
ALAMEDA POINT
SSIC NO. 5090.3

COMPREHENSIVE LONG-TERM ENVIRONMENTAL ACTION NAVY (CLEAN I)
Northern and Central California, Nevada, and Utah
Contract Number N62474-88-D-5086
Contract Task Order 0121
Modfication No. 0001

Prepared For

DEPARTMENT OF THE NAVY
George Kikugawa, Remedial Project Manager
Engineering Field Activity West
Naval Facilities Engineering Command
San Bruno, California

DATA SUMMARY REPORT BACKGROUND AND TIDAL INFLUENCE STUDIES AND ADDITIONAL WORK AT SITES 4 AND 5 NAVAL AIR STATION ALAMEDA ALAMEDA, CALIFORNIA VOLUME 2 OF 2 FINAL

October 16, 1995

Prepared By

PRC ENVIRONMENTAL MANAGEMENT, INC.
10670 White Rock Road, Suite 100
Rancho Cordova, CA 95670
(916) 852-8300

and

MONTGOMERY-WATSON CONSULTING ENGINEERS, INC.
365 Lennon Lane
Walnut Creek, CA 94598
510/975-3400

Duane C. Balch, Project Manager

N00236.001297
ALAMEDA POINT
SSIC NO. 5090.3

FINAL
DATA SUMMARY REPORT BACKGROUND AND TIDAL INFLUENCE STUDIES AND ADDITIONAL WORK AT SITES 4 AND 5

DATED 16 OCTOBER 1995

THIS RECORD CONTAINS MULTIPLE VOLUMES WHICH HAVE BEEN ENTERED SEPARATELY

VOLUME 1 OF 2 IS ENTERED IN THE DATABASE AND FILED AT ADMINISTRATIVE RECORD NO. **N00236.001296**

APPENDIX A

BORING LOGS

JAMES M. MONTGOMERY CONSULTING ENGINEERS, INC.

365 LENNON LANE, WALNUT CREEK, CALIFORNIA, 94598 / (415) 975-3400

BORING/WELL NUMBER *BG-MW-01*
DATE STARTED *5/27/92* COMPLETED *5/27/92*
REF. ELEVATION *7.67 FEET, TOP OF CASING*

CLIENT *PRC/US NAVY*
PROJECT/JMM PROJECT NO. *NAS ALAMEDA/2738.0655*
GEOLOGIST *DAN KRAMER*

DEPTH feet	SAMPLE	SAMP. NO.	BLOWS/6 IN	HNU-PID meter units	GRAPHIC LOG	SOIL CLASS	GEOLOGIC DESCRIPTION
	☒	CHEM	25			SP	SAND (SP), dark brown, very loose, dry, 15% silt,
			64			GC	gravlly SAND (GC), light brown, dense, dry, FILL
			9				
			10			SC	
2	☒	CHEM	10				sandy CLAY (SC), gray-green, medium dense, black organic layers and plant material, shells, moist
			1				
	☒	CHEM	2			CL	Sharp contact at 3 feet between fill and native material, iron oxide staining at contact
			5				
4			4			SM	CLAY (CL), with thin sand stringers, medium to coarse sand, grey to green, soft, moist
			2				
	☒	CHEM	2				silty SAND (SM), green, loose, wet, 15% fines shell fragments, clay stringers
			1				
6			2				
			4			CL	CLAY (CL), grey, wet, 2-inch wood fragment,
			5			SM	black fine organic material throughout
			7				silty SAND (SM), grey-green, wet
			7			CL	
			8			SM	Thin lens of CLAY (CL) at 8 feet
			6			SP	silty SAND (SM), gray-green, wet, 15% silt, very fine sand
			6				
10			2				SAND, green, wet, loose, moderately well sorted, contains shell fragments and a few thin clay layers
			2				
			12				
			4				
12			5				
			8				
			7				
14			7				
			9				
			3				TOTAL DEPTH 15.0 feet
16							
18							

WELL DIAGRAM

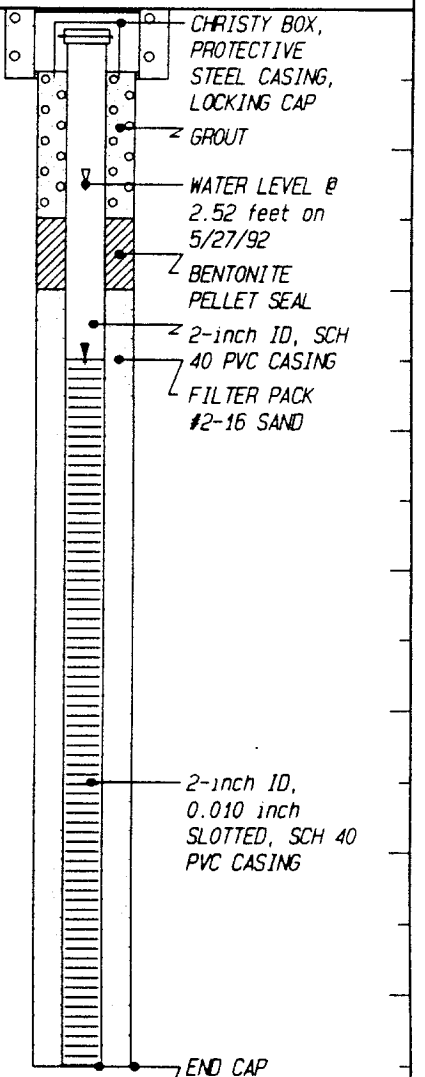

DRILLING METHOD/RIG TYPE *HSA/MOBILE B-53*
OLE DIAMETER *8.25 INCHES*
OTAL DEPTH OF BORING *15.0 FEET*

DRILLING CONTRACTOR/DRILLER *GREGG DRILLING*
BIT TYPE *HOLLOW STEM AUGER*
WELL COMPLETION DEPTH *15.0 FEET*

JAMES M. MONTGOMERY
CONSULTING ENGINEERS, INC.

365 LENNON LANE, WALNUT CREEK, CALIFORNIA, 94598 / (415) 975-3400

BORING/WELL NUMBER *BG-MW-02*
DATE STARTED *5/28/92* COMPLETED *5/28/92*
REF. ELEVATION *10.68 FEET, TOP OF CASING*

CLIENT *PRC/US NAVY*
PROJECT/JMM PROJECT NO. *NAS ALAMEDA/2738.0655*
GEOLOGIST *DONNA COURINGTON*

DEPTH feet	SAMPLE	SAMP. NO.	BLOWS/6 IN	HNU-PID meter units	GRAPHIC LOG	SOIL CLASS	GEOLOGIC DESCRIPTION
	☒	CHEM	14			SP	SAND (SP), brown, medium to coarse grained, trace fines, loose, rooted, scatered clay lumps, dry,
			25				trace shell fragments, lumps, dry, trace shell
			18				fragments
			9				
2	☒	CHEM	10				As above, coarse sand, 10% fines, loose
			10			CL	silty CLAY (CL), dark gray, moist, medium stiff,
	☒	CHEM	6			SC	plastic, contains roots and wood, iron oxide
			5				staining, horizontal lamination, plant material
4			5			SM	sandy CLAY (CL), sandy, moist, medium stiff,
			7				plastic, 20% fine sands, iron oxide stains at
	☒	CHEM	10				contact, silty sand, coarse, gray, moist, 10 to
			13				15% silt, contact between Fill/Native material at
6			8				3 feet
			11				silty SAND (SM), medium to coarse grained, 15 to
			19			SM	20% fines, wet, gray, loose, clay lens at 5 feet
			6				with horzontal lamations and plant roots
			7				throughout
			9				silty SAND (SM), medium to fine grained,
			4				wet, loose, 10 to 15% fines, root fragments
10			9				Chert gravel @8 feet
			7				
			1				
			2				
12			2			CL	sharp contact, with clay (CL), dark gray,
			1				silty, horzonal lamations, abundant
			1				plant remains, strong H2S odor
			2				
14			1				
			9				
			3				
			2				TOTAL DEPTH 15.0 feet
16							
18							

WELL DIAGRAM

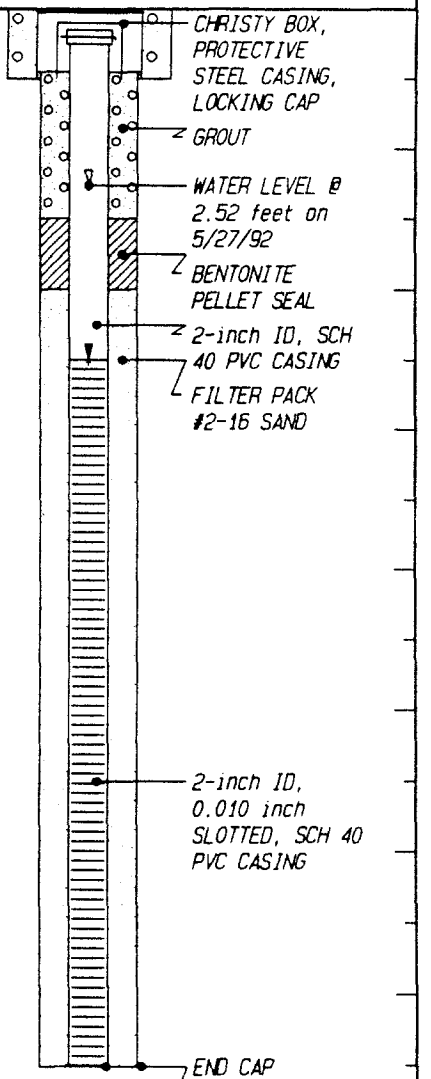

DRILLING METHOD/RIG TYPE *HSA/MOBILE B-53*
HOLE DIAMETER *8.25 INCHES*
TOTAL DEPTH OF BORING *15.0 FEET*

DRILLING CONTRACTOR/DRILLER *GREGG DRILLING*
BIT TYPE *HOLLOW STEM AUGER*
WELL COMPLETION DEPTH *15.0 FEET*

JAMES M. MONTGOMERY
CONSULTING ENGINEERS, INC.

365 LENNON LANE, WALNUT CREEK, CALIFORNIA, 94598 / (415) 975-3400

BORING/WELL NUMBER *BG-MW-03* CLIENT *PRC/US NAVY*

DATE STARTED *5/29/92* COMPLETED *5/29/92* PROJECT/JMM PROJECT NO. *NAS ALAMEDA/2738.0655*

REF. ELEVATION *12.14 FEET, TOP OF CASING* GEOLOGIST *DAN KRAMER*

DEPTH feet	SAMPLE	SAMP. NO.	BLOWS/6 IN	HNU-PID meter units	GRAPHIC LOG	SOIL CLASS	GEOLOGIC DESCRIPTION
	☒	CHEM	19			SM	silty SAND (SM), fine to medium sand, 20% silt, light brown, trace gravel, high est K., 5% gravel, roots, dry, loose, (FILL)
			24				
			32				
			55				
2	☒	CHEM	47				silty SAND (SM), green, moist, greater% of gravel
			40				silty SAND (SM), dark green, medium to coarse sand, black organic stringers, wet
			6				
			6				Contact between Fill/Native material @ 3 feet
4	☒	CHEM	4				silty SAND (SM), dark green, loose, saturated, 20% fines, fine to medium sand, very poorly sorted, faint H2S odor
			5				
			8				
	☒	CHEM	6				As above, with faint black horizontal laminations and plant material
6			2			SC	
			2				clayey SAND (SC), black, soft, wet, fine to medium sand, horizontal roots in place
			3				
			5				As above, coarsens to coarse sand in bottom 6 6 inches and color changes to dark brown
			8				
			18				
			7			SM	Grades over 1' to silty sand (SM), tan, medium dense, wet, medium to fine sand iron staining
			7				
10			9				As above, contain small and trace plant material
			19				
			24				Very dense
			50				
12			15				
			65				
			24				
			25				
14			40				
			95				
			2				TOTAL DEPTH 15.0 feet
16							
18							

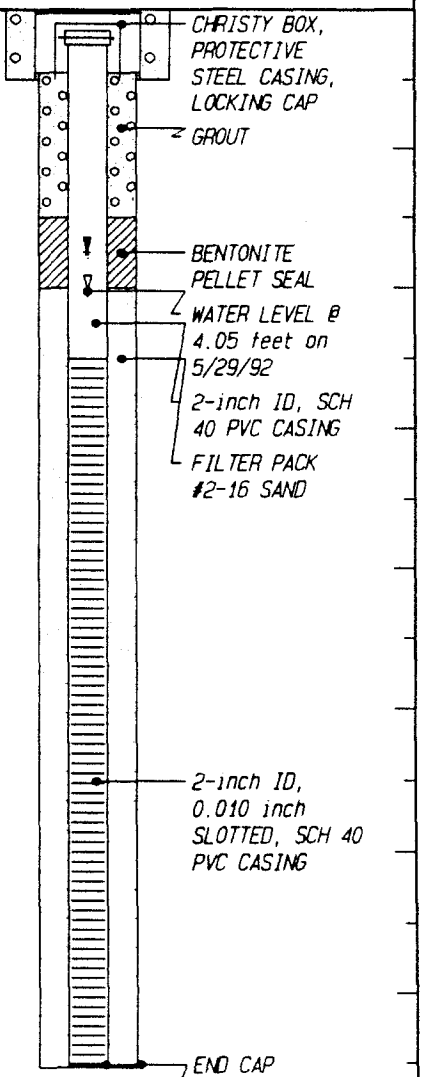

DRILLING METHOD/RIG TYPE *HSA/MOBILE B-53* DRILLING CONTRACTOR/DRILLER *GREGG DRILLING*

HOLE DIAMETER *8.25 INCHES* BIT TYPE *HOLLOW STEM AUGER*

TOTAL DEPTH OF BORING *15.0 FEET* WELL COMPLETION DEPTH *15.0 FEET*

JAMES M. MONTGOMERY
CONSULTING ENGINEERS, INC.

365 LENNON LANE, WALNUT CREEK, CALIFORNIA, 94598 / (415) 975-3400

BORING/WELL NUMBER *BG-MW-04*
DATE STARTED *5/29/92* COMPLETED *5/29/92*
REF. ELEVATION *10.03 FEET, TOP OF CASING*

CLIENT *PRC/US NAVY*
PROJECT/JMM PROJECT NO. *NAS ALAMEDA/2738.0655*
GEOLOGIST *DAN KRAMER*

DEPTH feet	SAMPLE	SAMP. NO.	BLOWS/6 IN	HNU-PID meter units	GRAPHIC LOG	SOIL CLASS	GEOLOGIC DESCRIPTION
	☒	CHEM	35			SM	silty SAND (SM), light brown, dense, fine sand, 15% fines, 10% gravel, roots, dry
			32			SP	
			30				silty SAND (SP), saturated, medium to coarse sand, orange tan, 15% fines, medium sand, wet at 3'
			10				
2	☒	CHEM	21				
			22				
			7				
			9				
4			10				
			5				As above
			9				
			9				
6			5				As above to 7 feet
			12				
			15			GM	silty GRAVEL (GM), medium dense, damp, black coating on outside of core, Fill/Native contact
	☒	CHEM	12			SP	
			15				SAND (SP), green to grey with black mottling, moist, less than 15% fines, medium to coarse, clay lens at 8.5 feet, tan, stiff, damp
			18				
			9				As above, with gravelly zone, at 10 feet
			12				
10	☒	CHEM	20				
			4				As above
			11				
			14				
12			8				SAND (SP), medium to coarse, loose, wet, gray to green
			12				
			22				
			5				As above, very dense, wet
14			11				
			21				
							TOTAL DEPTH 15.0 feet
16							
18							

WELL DIAGRAM

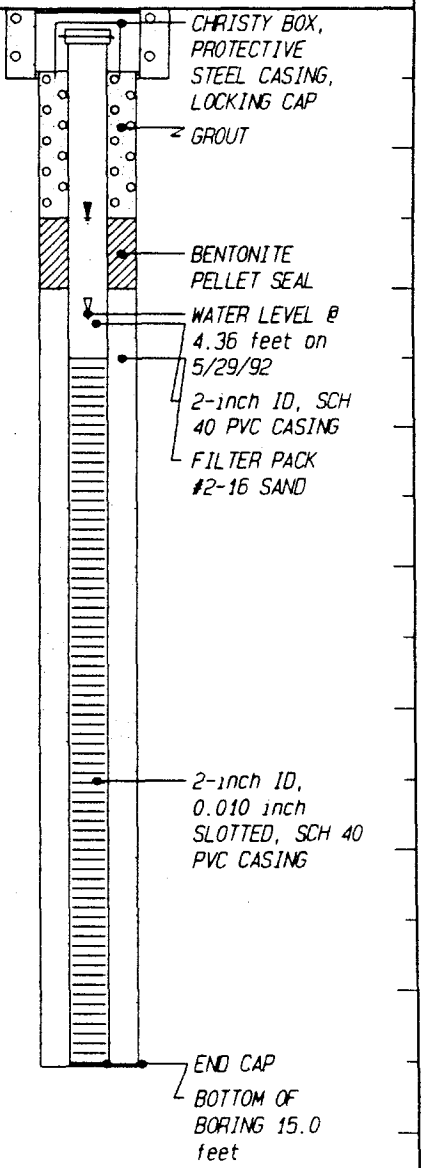

DRILLING METHOD/RIG TYPE *HSA/MOBILE B-53*
OLE DIAMETER *8.25 INCHES*
OTAL DEPTH OF BORING *15.0 FEET*

DRILLING CONTRACTOR/DRILLER *GREGG DRILLING*
BIT TYPE *HOLLOW STEM AUGER*
WELL COMPLETION DEPTH *15.0 FEET*

JAMES M. MONTGOMERY
CONSULTING ENGINEERS, INC.
365 LENNON LANE, WALNUT CREEK, CALIFORNIA, 94598 / (415) 975-3400

BORING/WELL NUMBER B-05PS-01 CLIENT PRC/US NAVY
DATE STARTED 6/3/92 COMPLETED 6/3/92 PROJECT/JMM PROJECT NO. NAS ALAMEDA/2738.0652
ELEVATION _____ GEOLOGIST DAN KRAMER

DEPTH feet	SAMPLE	SAMP. NO.	BLOWS/6 IN	HNU-PID	GRAPHIC LOG	SOIL CLASS	GEOLOGIC DESCRIPTION	COMMENTS
0						SP	SAND (SP), brown-red, moist, 10 to 15% gravel	
2								
4	☒	CHEM						▼ DEPTH TO WATER=3 feet
	☒	CHEM					SAND (SP) gray, wet, 10% fines, shell fragments, medium to coarse grained	
6							Advanced to 10 feet	Stainless Steel sleeves were removed from barrel due to heaving sand complications. Sample collected from extruded core.
10							SAND (SP), olive-green, medium dense, wet, 10% fines, fine sand, trace shell fragments	
12						CL	CLAY (CL), based on drilling cuttings	
14							sandy CLAY (CL), grey, stiff, wet, 10 to 15% very fine to fine sand, trace shell fragments	
16								
18						SP	SAND (SP), grey-green, medium dense, wet, 5 to 15% fines, fine sand, trace shell fragment	
							TOTAL DEPTH 18.0 feet	

DRILLING METHOD/RIG TYPE PSI DRIVE CORE DRILLING CONTRACTOR PRECISION SAMPLING/MIKE CASEY
OLE DIAMETER 1.62 INCHES BIT TYPE N/A
OTAL DEPTH OF BORING 6.0 FEET DRILLER 18

JAMES M. MONTGOMERY CONSULTING ENGINEERS, INC.

365 LENNON LANE, WALNUT CREEK, CALIFORNIA, 94598 / (415) 975-3400

BORING/WELL NUMBER *B-05PS-02* CLIENT *PRC/US NAVY*

DATE STARTED *6/3/92* COMPLETED *6/3/92* PROJECT/JMM PROJECT NO. *NAS ALAMEDA/2738.0652*

ELEVATION _____ GEOLOGIST *DAN KRAMER*

DEPTH feet	SAMPLE	SAMP. NO.	BLOWS/6 IN	HNU-PID	GRAPHIC LOG	SOIL CLASS	GEOLOGIC DESCRIPTION	COMMENTS
						CN	CONCRETE FLOOR	
						SM	silty SAND (SM) orange-brown, loose, moist, 30% fines, fine sand, trace gravel (10%), granule to pebble size	
2		CHEM						
						SP	SAND (SP), green, medium dense, saturated, <15% fines, medium to coarse sand, few shell fragments	▼ DEPTH TO WATER=3 feet
4							As above, sands flowing into drill pipe	Stainless Steel sleeves were removed from barrel due to heaving sand complications. Sample collected from extruded core.
		CHEM					As above, color change to light brown, 5% gravel	
6							TOTAL DEPTH 6.0 feet (5.0 feet below bottom of concrete floor)	
8								

DRILLING METHOD/RIG TYPE *PSI DRIVE CORE* DRILLING CONTRACTOR *PRECISION SAMPLING/MIKE CASEY*

HOLE DIAMETER *1.62 INCHES* BIT TYPE *N/A*

TOTAL DEPTH OF BORING *6.0 FEET* DRILLER _____

JAMES M. MONTGOMERY
CONSULTING ENGINEERS, INC.
365 LENNON LANE, WALNUT CREEK, CALIFORNIA, 94598 / (415) 975-3400

BORING/WELL NUMBER B-05PS-03
DATE STARTED 6/3/92 COMPLETED 6/3/92
ELEVATION

CLIENT PRC/US NAVY
PROJECT/JMM PROJECT NO. NAS ALAMEDA/2738.0652
GEOLOGIST DAN KRAMER

DEPTH feet	SAMPLE	SAMP. NO.	BLOWS/6 IN	HNU-PID	GRAPHIC LOG	SOIL CLASS	GEOLOGIC DESCRIPTION	COMMENTS
						CN	CONCRETE FLOOR	
2		CHEM				SM	silty SAND (SM), orange-brown, loose, moist, 30% fines, 10% angular gravel, medium to fine sand	
						SP	SAND (SP), brown, loose, wet, 15% fines, medium to coarse sand, contain shell fragments	▼ DEPTH TO WATER=3.0 feet
								Stainless Steel sleeves were removed from barrel due to heaving sand complications. Sample collected from extruded core.
6		CHEM					As above, color change to green, loose, saturated, heaving sands, 15% fines, medium to coarse sand, contains shell fragments	
							TOTAL DEPTH 6.5 (5.0 feet below bottom of concrete floor)	
8								

DRILLING METHOD/RIG TYPE PSI DRIVE CORE
HOLE DIAMETER 1.62 INCHES
TOTAL DEPTH OF BORING 6.5 FEET

DRILLING CONTRACTOR PRECISION SAMPLING/MIKE CASEY
BIT TYPE N/A
DRILLER

JAMES M. MONTGOMERY
CONSULTING ENGINEERS, INC.
365 LENNON LANE, WALNUT CREEK, CALIFORNIA, 94598 / (415) 975-3400

BORING/WELL NUMBER B-05PS-04 CLIENT PRC/US NAVY
DATE STARTED 6/3/92 COMPLETED 6/3/92 PROJECT/JMM PROJECT NO. NAS ALAMEDA/2738.0652
ELEVATION _____ GEOLOGIST DAN KRAMER

DEPTH feet	SAMPLE	SAMP. NO.	BLOWS/6 IN	HNU-PID	GRAPHIC LOG	SOIL CLASS	GEOLOGIC DESCRIPTION	COMMENTS
						CN	CONCRETE FLOOR	
2						GM	silty GRAVEL (GM), orange-brown, loose, wet, 30% fines, 50% gravel, medium to fine sand, (gravel poorly sorted angular)	
		CHEM				SM	silty SAND (SM), brown, loose, damp, fine sand, 15% silt, poorly sorted	▼ DEPTH TO WATER=3.0 feet
							As above, sand is coarser, a few shell fragments, wet at approximately 2 feet	
						SP	SAND (SP), brown, loose, saturated, medium to coarse sand, a few thin clay stringers	Stainless Steel sleeves were removed from barrel due to heaving sand complications. Sample collected from extruded core.
		CHEM						
6							As above, green, medium grained, moderately sorted, loose, saturated, 5% fines contains shell fragments	
							TOTAL DEPTH 6.5 (5.0 feet below bottom of concrete floor)	
8								

DRILLING METHOD/RIG TYPE PSI DRIVE CORE DRILLING CONTRACTOR PRECISION SAMPLING/MIKE CASEY
HOLE DIAMETER 1.62 INCHES BIT TYPE N/A
TOTAL DEPTH OF BORING 6.5 FEET DRILLER _____

JAMES M. MONTGOMERY
CONSULTING ENGINEERS, INC.
365 LENNON LANE, WALNUT CREEK, CALIFORNIA, 94598 / (415) 975-3400

BORING/WELL NUMBER B-05PS-05
DATE STARTED 6/3/92 COMPLETED 6/3/92
ELEVATION

CLIENT PRC/US NAVY
PROJECT/JMM PROJECT NO. NAS ALAMEDA/2738.0652
GEOLOGIST DAN KRAMER

DEPTH feet	SAMPLE	SAMP. NO.	BLOWS/6 IN	HNU-PID	GRAPHIC LOG	SOIL CLASS	GEOLOGIC DESCRIPTION	COMMENTS
						CN	CONCRETE FLOOR	
2						GM	silty GRAVEL (GM), brown, loose, wet, 30% fines, 50% gravel, 10 to 15% fine to coarse sand, poorly sorted, angular gravel	
		CHEM						
						SM	silty SAND (SM), brown, loose, wet, 15 to 20% silt, poorly sorted As above	! DEPTH TO WATER=3.0 feet below concrete Stainless Steel sleeves were removed from barrel due to heaving sand complications. Sample collected from extruded core.
4						SP	SAND (SP), brown, loose, moist, 10% fines, medium to fine sand	
6		CHEM					As above, color change to green, loose, wet, medium to fine sand, contains shell fragments TOTAL DEPTH 6.5 (5.0 feet below bottom of concrete floor)	
8								

DRILLING METHOD/RIG TYPE PSI DRIVE CORE
OLE DIAMETER 1.62 INCHES
OTAL DEPTH OF BORING 6.5 FEET

DRILLING CONTRACTOR PRECISION SAMPLING/MIKE CASEY
BIT TYPE N/A
DRILLER

JAMES M. MONTGOMERY CONSULTING ENGINEERS, INC.

365 LENNON LANE, WALNUT CREEK, CALIFORNIA, 94598 / (415) 975-3400

BORING/WELL NUMBER M-05-HW-01 | CLIENT PRC/US NAVY

DATE STARTED 5/28/92 COMPLETED 5/28/92 | PROJECT/JMM PROJECT NO. NAS ALAMEDA/2738.0652

REF. ELEVATION 11.37 FEET, TOP OF CASING | GEOLOGIST DONNA COURINGTON

DEPTH feet	SAMPLE	SAMP. NO.	BLOWS/6 IN	HNU-PID meter units	GRAPHIC LOG	SOIL CLASS	GEOLOGIC DESCRIPTION
0	☒	CHEM				SM	SAND (SM), silty brown, 15-20% fines, loose, dry to mosit
2							As above, no samples from 1 to 5 feet
4							
6	☒	CHEM	5 6 10			SP	SAND (SP), red-brown, wet, loose, coarse grained, 10% fines, trace shell fragments
8							
10	☒	CHEM	8 10 14				As above, (SP)
12							
14			6 3 3			SM	silty SAND (SM), dark gray, wet, 20-25% fines, abundent whole shells
16							TOTAL DEPTH 15.5 feet
18							

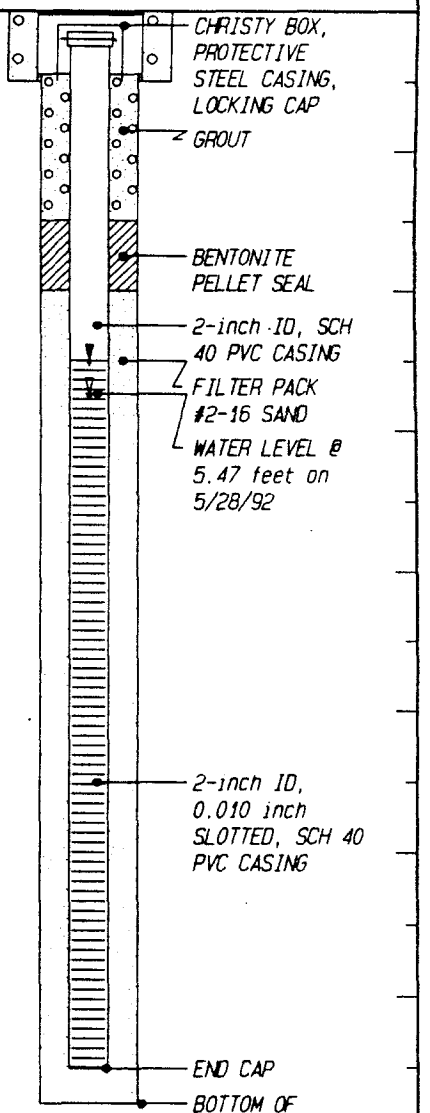

WELL DIAGRAM

DRILLING METHOD/RIG TYPE HSA/MOBILE B-53 | DRILLING CONTRACTOR/DRILLER GREGG DRILLING

HOLE DIAMETER 8.25 INCHES | BIT TYPE HOLLOW STEM AUGER

TOTAL DEPTH OF BORING 15.5 FEET | WELL COMPLETION DEPTH 15.0 FEET

JAMES M. MONTGOMERY
CONSULTING ENGINEERS, INC.
365 LENNON LANE, WALNUT CREEK, CALIFORNIA, 94598 / (415) 975-3400

BORING/WELL NUMBER B-05-HW-02
DATE STARTED 5/28/92 COMPLETED 5/28/92
ELEVATION 11.29 FEET

CLIENT PRC/US NAVY
PROJECT/JMM PROJECT NO. NAS ALAMEDA/2738.0652
GEOLOGIST DAN KRAMER

DEPTH feet	SAMPLE	SAMP. NO.	BLOWS/6 IN	HNU-PID	GRAPHIC LOG	SOIL CLASS	GEOLOGIC DESCRIPTION	COMMENTS
	☒	CHEM	24			SM	silty SAND (SM), brown, medium dense, damp, medium sand, 15 to 20% fines, trace gravel	
			40					
2			45					
			20				As above	
			25					
			22					
			5					
4	☒	CHEM	5				As above, wet	
			14					
			5					! DEPTH TO WATER=5 feet
			9					
6			15					
			6			SP	SAND (SP), grey to green, loose, medium dense, medium to coarse sand, 5% fines	
			14					
			22					
			15					
			27				As above	
			22			SM	silty SAND (SM), greyish green with black staining, saturated	
			8					
10	☒	CHEM	12					
			14				As above to 11.5 feet	
			6					
			15					
12			18				silty SAND (SM), dark grey, fine sand, bivalve shells whole and articulted, 1 inch clay lens at 12 feet (plastic, soft, no organics)	
			40			SC	clayey SAND (SC), dark grey, fine to coarse sand, poorly sorted, 15 to 20% fines, contains small articulated bivalve shells and fragments of wood	
			8					
14			7					
	☒	CHEM	8				Shell hash at 15 feet	
							TOTAL DEPTH 15.0 feet	
16								
18								

DRILLING METHOD/RIG TYPE AUGER/MOBILE B-53 DRILLING CONTRACTOR GREGG DRILLING
HOLE DIAMETER 8.25 INCHES BIT TYPE HOLLOW STEM AUGER
TOTAL DEPTH OF BORING 15 FEET DRILLER STEVE/TED

JAMES M. MONTGOMERY
CONSULTING ENGINEERS, INC.

365 LENNON LANE, WALNUT CREEK, CALIFORNIA, 94598 / (415) 975-3400

BORING/WELL NUMBER *M-05-BS-01*
DATE STARTED *5/28/92* COMPLETED *5/28/92*
REF. ELEVATION *11.97 FEET, TOP OF CASING*

CLIENT *PRC/US NAVY*
PROJECT/JMM PROJECT NO. *NAS ALAMEDA/2738.0652*
GEOLOGIST *DAN KRAMER*

DEPTH feet	SAMPLE	SAMP. NO.	BLOWS/6 IN	HNU-PID meter units	GRAPHIC LOG	SOIL CLASS	GEOLOGIC DESCRIPTION
2	☒	CHEM	9			SP	SAND (SP), brown, medium to coarse sand, loose, 5% fines, damp
			18				
			25				
			15				SAND (SP), fine to medium grained, 10% fines damp, loose
	☒	CHEM	29				
			40				
4			9				As above
			11				
			13				
							As above, iron oxide staining
			4				As above, saturated at 5.0 feet
6	☒	CHEM	5				
			5			SC SM	silty SAND (SM), fine to very fine sand, light brown, high est K., fines downward to clayey SAND (SC), at 7 feet, light brown, moist, soft
			4				
			8			SP	
			12				SAND (SP), green, medium to coarse, 5% fines, shell fragments, wet
			3				
			2				
			7				
10			2				
			4				
			7				
			5				
12			11				
			25				
			7				
			9			CL	CLAY (CL)
14			14			SP	SAND (SP), as above to 15'
			4				
			5				
	☒	CHEM	11			CL	CLAY (CL), black, 15% silt and fine sand, moist, soft
16							TOTAL DEPTH 15.5 feet
18							

WELL DIAGRAM

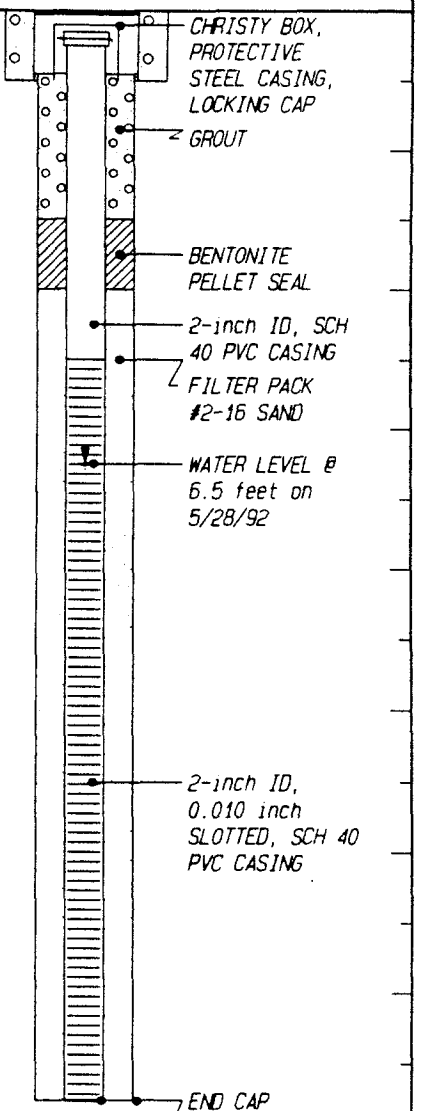

DRILLING METHOD/RIG TYPE *HSA/MOBILE B-53*
DRILLING CONTRACTOR/DRILLER *GREGG DRILLING*
DLE DIAMETER *8.25 INCHES*
BIT TYPE *HOLLOW STEM AUGER*
OTAL DEPTH OF BORING *15.5 FEET*
WELL COMPLETION DEPTH *15.5 FEET*

APPENDIX B

SURVEY DATA

APPENDIX B

SURVEY DATA

Monitoring well and boring locations were surveyed horizontally relative to the State Plane Coordinate System, Zone 3, NAD 27. Ground surface elevations at boring locations and top-of-casing elevations for monitoring wells were surveyed vertically relative to the U.S. Coast and Geodetic Survey mean lower low water. All surveying was performed by Nolte Associates, Walnut Creek, California. Survey data are summarized in Table B-1.

TABLE B-1
SURVEY DATA
NAS ALAMEDA CTO 121 MOD 001

Boring	Northing	Easting	Ground Surface Elevation	Top of Casing Elevation
B-05WT-01	472454.546	1478362.921	12.89	--
B-05WT-02	472454.388	1478351.639	12.81	--
M-05HW-01	472354.161	1478833.524	--	11.37
B-05HW-02	472326.735	1478831.665	11.29	--
M-05BS-01	473148.518	1478836.839	--	11.97
M-BG1	474390.569	1481013.784	--	7.67
M-BG2	473189.580	1481921.776	--	10.68
M-BG3	470848.822	1482481.697	--	12.14
M-BG4	473984.899	1478449.871	--	10.03

Elevations are feet above USCGS Mean Low Low Water

APPENDIX C

ANALYTICAL QUALITY CONTROL PROGRAM

C.0 ANALYTICAL QUALITY CONTROL PROGRAM

C.1 INTRODUCTION

This quality control appendix summarizes any quality control issues that resulted from the sample analyses of CTO 121 Addendum of Phases 2B and 3 at Naval Air Station, Alameda.

This section describes the guidelines utilized to evaluate the field program's chemical data. The quality control (QC) program and data quality objectives (DQO) were defined in the Quality Assurance Project Plan (QAPjP) published by Canonie 1990 and the JMM QAPjP Addendum. The DQO and QC program described in the QAPjP provided the structure by which the chemical data results were reviewed. This section will also address any deviations from the QAPjP.

Environmental Sciences and Engineers (ESE), approved by Navy for this project, performed all of the required analyses. Analytical methods performed on both water and soil samples are presented in Table 1.

For review and comparison, Appendix D contains a table of field and laboratory sample identification numbers, batch identification number, and analytical parameters. This appendix also identifies the type of QC and quality assurance (QA) samples collected at the site.

C.2 DATA QUALITY OBJECTIVES

DQOs are qualitative and quantitative statements that specify the quality of the data required to meet the goals of the investigation and to support decisions made in remedial response activities. DQOs are expressed in terms of precision, accuracy, representativeness, completeness, and comparability (PARCC) which were developed for this project based on U.S. Environmental Protection Agency (USEPA) procedures and James M. Montgomery Consulting Engineers, Incorporated (JMM) previous experience. DQOs are satisfied if QC samples meet the acceptance criteria established in the QAPjP. Unacceptable QC samples not meeting criteria will serve as flags to identify data that must be qualified or replaced through corrective procedures. The QAPjP identifies specific DQO for field sample and QC data. The following sections describe each of the PARCC criteria.

TABLE 1
ANALYTICAL METHODS

Parameter	Soil Samples	Water Samples
VOC	CLP RAS	CLP SAS
SVOC	CLP RAS	CLP RAS
OC Pesticides/PCBs	CLP RAS	CLP RAS
OP Pesticides	NA	EPA 8140
Chlorinated Herbicides	NA	EPA 8150
Monuron/Diuron	NA	EPA 632
Glyphosate	NA	EPA 547
Ethylene Dibromide	EPA Mod 504	EPA 504
Petroleum Hydrocarbons	SW9071/EPA 418.1	EPA 418.1
Oil and Grease	SW9071/413.2	NA
Metals	CLP RAS	CLP RAS
Hexavalent Chromium	SW-846, 7196	SW-846, 7196
Total Cyanide	CLP RAS	CLP RAS
Acidity	NA	EPA 305.1
Alkalinity	NA	SM 403
Biochemical Oxygen Demand	NA	EPA 405.1
Chemical Oxygen Demand	NA	EPA 410.1
Chloride, Fluoride, Sulfate	NA	EPA 300
Hardness	NA	EPA 130.2
Nitrate, Nitrite	NA	EPA 353.2
pH	SW 9040	NA
Percent Moisture, Solids	ASTM D2216	NA
Total Dissolved Solids	NA	EPA 160.1
Total Organic Carbon	ASTM D2974	EPA 415.2

1.2.1 Precision and Accuracy

Precision is a measurement of mutual agreement among individual measurements of the same property usually under prescribed similar conditions. Precision data consist of results from the analysis of field duplicates, matrix spike duplicates, laboratory control samples (LCS), and blind samples. Precision is expressed in terms of a relative percent difference (RPD). These parameters are evaluated in Section C5.

Accuracy is the nearness of the mean of a set of results to the true value. Accuracy is assessed through the analysis of spiked laboratory control samples, internal and surrogate standards, and matrix spike samples. Accuracy is expressed as percent recovery. These parameters are evaluated in Section C5.

Precision and accuracy are evaluated mainly on the analysis of the matrix spike and matrix spike duplicate (MS/MSD) samples. Whenever the MS/MSD criteria are unacceptable, due to matrix effects, the evaluation will continue with the associated LCS. The LCS samples allow analytical bias and precision to be evaluated in a controlled matrix, making it possible to isolate analytical bias and precision from field sampling and matrix interference problems. Section C5 provides evaluation information on these parameters.

Precision and accuracy results for each water and soil sample batch analyzed are provided in Appendix D with the sample data. The QC tables include method blank, LCS, MS/MSD, and surrogate recovery summaries. A diagram is provided at the beginning of the appendix to illustrate the use of the summary tables. Some MS/MSD sample results are noted in these tables also to supplement unacceptable LCS results.

C.2.1.1 Laboratory Control Samples. The frequency of the LCS preparation and analyses are within guidelines stated in the QAPjP and the JMM QAPjP Addendum. All analyses have associated LCS data. LCS values are identified as the Standard Matrix Spike Recovery Summaries located above the MS/MSD or replicate QC data.

LCS analyses provide the precision and accuracy data for target analytes from an interference-free matrix. Therefore, the evaluation of data for this project will initially focus on MS/MSD results; if these are unacceptable, the LCS results will be assessed to distinguish a matrix interference from a laboratory performance problem. Sample batches with criteria issues are addressed in Section C5.

C.2.1.2 Surrogates. Evaluation of field sample accuracy were assessed through the percent recoveries of surrogate compounds. Surrogate compounds measure the efficiency of all analytical

procedures used to analyze volatile organic compounds (VOC), semivolatile organic compounds (SVOC), and pesticide/polychlorinated biphenyls (PCBs). These compounds mimic the behavior of the target analytes. Surrogate compounds for applicable water and soil analyses were analyzed following CLP protocol. Surrogate results are provided with the LCS data in Appendix D. If the precision and accuracy of the MS, the accuracy of the LCS, and the sample surrogate recovery was met, the data were acceptable and were not qualified. If the sample surrogate recovery exceeded the specified limits of the method, then the sample data may result in a positive bias and positive results would be qualified as estimates. If sample surrogates were below the criteria limits, then both the positive results and the non-detect results may have a negative bias and both were qualified as estimates. If the sample surrogates are below a 10% recovery, then the non-detect data were qualified as unusable. A detailed evaluation of surrogate recoveries for each parameter is summarized on a per batch basis.

C.2.1.3 Matrix Spike and Matrix Spike Duplicate Samples. Matrix spike and matrix spike duplicate (MS/MSD) samples were collected and analyzed as outlined in the QAPjP and the JMM QAPjP Addendum. Appendix D contains a summary of the MS/MSD precision and accuracy acceptance limits. The RPD of the MS/MSD recoveries provided the tools to evaluate the precision while analytical accuracy was evaluated using the MS/MSD recoveries.

The MS/MSD precision and accuracy results aided in the assessment of matrix effects on the water and soil sample results for this project. Those recoveries not meeting acceptable limits were identified by an underlined value in Appendix D. In cases where MS/MSD results were unacceptable, the LCS results were evaluated for their acceptability. In this manner a matrix effect was distinguished from a laboratory performance problem. The MS/MSD criteria were met in QC batches unless noted. If the MS/MSD recoveries were found higher than the method recovery limits and the LCS had elevated recoveries, there is a positive bias to sample concentration due to both matrix affects and laboratory accuracy. Positive sample results were qualified as estimates. If MS/MSD recoveries were found below the specified recovery limits, then both the positive and non-detect results within the sample batch were estimates. But if recoveries were found to be equal or less than 10%, the positive results were estimates and non-detect results were rejected within the sample batch for the compound or analyte out of compliance.

For metal and general chemistry analyses, laboratory duplicates are implemented rather than a MS/MSD. The duplicate samples are compared for precision.

C.2.1.4 Field Duplicate Samples. Field duplicate samples were collected to aid in determining the precision of the analytical results. The duplicates were collected concurrently with the field samples, but were given a unique sample identification number. Therefore, the laboratory was unable to correlate

the two samples, and the duplicates were kept "blind". The collection frequency established in the QAPjP and the JMM QAPjP Addendum was met.

Table 2 summarizes analytical results and precision values for water and soil field duplicate samples. Any samples which had results less than the detection limit were included in the table. Samples that had one positive result and one result less than detection limit were also included and were evaluated by considering how close the positive result was to the detection limit and the established criteria to evaluate precision.

There are no review criteria for field duplicate analyses comparability. Guidelines established by ESE follow 30% limit for water and 50% for soil matrices. Many of the field samples compared to the field duplicate samples produced high RPD values. These samples demonstrate possible non-homogeneity that may not be reflected upon the laboratory's analytical performance. The RPD values were not calculated for non-detectable analytes or compounds.

C.2.2 Representativeness

Representativeness displays the degree to which sample data accurately and precisely represent the characteristics of a population, parameter variations at a sampling point, or an environmental condition. Representativeness is assessed based on the analysis of method blanks, trip blanks, equipment rinsate blanks, water source, and LCS. The evaluation of these samples is discussed in Section C5.

Representativeness is the reliability with which a measurement or measurements system reflects the true conditions under investigation. It is influenced by the number and location of the sampling points, sample timing and frequency in monitoring efforts, and by the field sampling and laboratory analytical procedures. By assessment of the sampling plan, with regards to the sample sites and sampling points, it was assessed that the sampling events that occurred at NAS Alameda were well representative of the conditions of the RI/FS conducted. Sampling points were placed with regard to possible contamination. Analytical methods and their units that were used for this RI/FS were effective in contaminant measurement.

Representativeness was also evaluated from the analysis of the water source, equipment rinsate blank, trip blank, and method blank quality control samples. Through the evaluation of these samples, it is possible to determine if analytes detected in water and soil samples are representative of site conditions or if positive values are indicative of contamination introduced during sampling or analysis. If a compound or analyte is found in a blank and the associated samples, then the amount in the samples is assessed to

TABLE 2
FIELD SAMPLE AND DUPLICATE SUMMARY
WATER SAMPLES - NAS ALAMEDA

	B-05PS-01			B-05HW-01		
Analyte	Field Sample	Field Dup. Sample	RPD (%)	Field Sample	Field Dup. Sample	RPD (%)
Volatile Organic Compounds (µg/kg)						
1,1-Dichloroethane	480	400	18.18	-	-	-
1,1-Dichloroethylene	-	-	NC	3.9	3.2	19.72
1,2-Dichloroethene	-	-	NC	46	21	74.63
Tetrachloroethene	-	-	NC	2.9	2.9	0
Trichlorethene	-	-	NC	16	15	6.45
Chloroethane	1300	1500	14.29	-	-	-
Chlorobenzene	-	-	NC	2.1	2.2	4.65
1,1,1-Trichloroethane	720	430	50.43	-	-	-
Vinyl Chloride	-	-	NC	33	27	20.00
Semivolatile Organic Compounds (µg/kg)						
1,3-Dichlorobenzene	NRQ	NRQ	NC	2.3	3.3	35.71
1,2-Dichlorobenzene	NRQ	NRQ	NC	34	44	25.64
1,4-Dichlorobenzene	NRQ	NRQ	NC	6.4	9.3	36.94
Bis(2-ethylhexyl)Phthalate	NRQ	NRQ	NC	11	9.1	18.91
Bis(2-Chl'Isopropyl) Ether	NRQ	NRQ	NC	1.3	1.2	8.00
Pyrene	NRQ	NRQ	NC	1.4	1.3	7.41
Metals (mg/kg)						
Aluminum	1470	1150	24.43	-	-	NC
Arsenic	3.40	2.90	15.87	4.6	3.9	16.47
Barium	161	165	2.45	70.3	81.9	15.24
Cadmium	4.40	<3.9	NC	-	-	NC
Calcium	11200	10200	9.35	43800	48200	9.57
Chromium	23	19	21.15	-	-	NC
Copper	15	25	47.86	12.9	<3.8	NC
Iron	1380	1150	18.18	8	60	152.94
Lead	4.2	156	189.51	-	-	NC
Magnesium	22800	22400	1.77	34400	31300	9.44
Nickel	46.5	45.2	2.84	39.1	37.3	4.71
Potassium	30400	29600	2.67	22900	24900	8.37
Sodium	747000	739000	1.08	201000	181000	10.47
Vanadium	13.8	12.3	11.49	-	-	NC
Zinc	369	429	15.04	-	-	NC
Hexavalent chromium	1020	<1000	NC	-	-	NC
General Chemicals						
Cyanide (µg/L)	342	166	69.29	<10.0	15.7	NC
Total Dissolved Solids (mg/L)	2380	2410	1.25	900	858	4.78
pH	7.00	NRQ	NC	7.1	7.1	0
Specific Conductance (µmhos/cm)	2300.00	NRQ	NC	900	900	0
Chloride (mg/L)	NRQ	NRQ	NC	NRQ	173.3	NC
Sulfate (mg/L)	NRQ	NRQ	NC	NRQ	36.93	NC
Fluoride (mg/L)	NRQ	NRQ	NC	NRQ	0.52	NC
Alkalinity (mg/L CaCO3)	NRQ	NRQ	NC	NRQ	109	NC
Hardness (mg/L CaCO3)	NRQ	NRQ	NC	NRQ	286	NC
BOD (mg/L)	NRQ	NRQ	NC	NRQ	5.4	NC

Notes:
NC - Not Calculated
NRQ-Not Required
"-"Not Detected

TABLE 2
FIELD SAMPLE AND DUPLICATE SUMMARY
WIPE SAMPLES - NAS ALAMEDA

Analyte	W04-07 Field Sample	W04-07 Field Dup. Sample	W04-07 RPD (%)	W05-08 Field Sample	W05-08 Field Dup. Sample	W05-08 RPD (%)
Volatile Organic Compounds (µg/sq. ft.)						
Chloroethane	NRQ	NRQ	NC	NRQ	NRQ	NC
Acetone	NRQ	NRQ	NC	NRQ	NRQ	NC
Semivolatile Organic Compounds (µg/sq. ft.)						
Acenaphthylene	NRQ	NRQ	NC	NRQ	NRQ	NC
Anthracene	NRQ	NRQ	NC	NRQ	NRQ	NC
Benzo(a)Anthracene	NRQ	NRQ	NC	NRQ	NRQ	NC
Benzo(a)Pyrene	NRQ	NRQ	NC	NRQ	NRQ	NC
Benzo(b)fluoranthene	NRQ	NRQ	NC	NRQ	NRQ	NC
Benzo(k)fluoranthene	NRQ	NRQ	NC	NRQ	NRQ	NC
Benzo(ghi)perylene	NRQ	NRQ	NC	NRQ	NRQ	NC
Bis(2-ethylhexyl)Phthalate	NRQ	NRQ	NC	NRQ	NRQ	NC
Chrysene	NRQ	NRQ	NC	NRQ	NRQ	NC
Fluoranthene	NRQ	NRQ	NC	NRQ	NRQ	NC
Indeno(1,2,3-CD) Pyrene	NRQ	NRQ	NC	NRQ	NRQ	NC
Naphthalene	NRQ	NRQ	NC	NRQ	NRQ	NC
Phenanthrene	NRQ	NRQ	NC	NRQ	NRQ	NC
Pyrene	NRQ	NRQ	NC	NRQ	NRQ	NC
Metals (µg/sq. ft.)						
Aluminum	8270.00	9050.00	9.01	9660.00	8370.00	14.31
Antimony	12.70	<4.6	NC	12.20	8.99	30.30
Arsenic	0.46	<0.38	NC	3.08	2.06	39.69
Barium	12300.00	95.20	196.93	11800.00	7640.00	42.80
Cadmium	25.10	13.90	57.44	45.00	46.10	2.41
Calcium	4440.00	4710.00	5.90	33200.00	61500.00	59.77
Chromium	292.00	168.00	53.91	1690.00	1520.00	10.59
Cobalt	46.10	20.40	77.29	36.00	70.50	64.79
Copper	104.00	55.20	61.31	71.60	72.50	1.25
Iron	1960.00	1110.00	55.37	1620.00	1800.00	10.53
Lead	179.00	93.00	63.24	1430.00	2740.00	62.83
Magnesium	772.00	781.00	1.16	1840.00	3060.00	49.80
Manganese	19.90	11.80	51.10	41.80	56.00	29.04
Mercury	0.04	0.05	13.95	0.07	0.14	66.67
Nickel	2380.00	993.00	82.24	801.00	492.00	47.80
Potassium	6480.00	7120.00	9.41	6730.00	4950.00	30.48
Silver	17.60	17.20	2.30	-	-	-
Sodium	20600.00	23100.00	11.44	22300.00	16600.00	29.31
Vanadium	1.88	83.40	191.18	2.24	3.22	35.90
Zinc	8440.00	9270.00	9.37	11100.00	6080.00	58.44
Hexavalent chromium	14000.00	<200	NC	1600.00	1450.00	9.84
Petroleum Hydrocarbons (µg/sq. ft.)	NRQ	NRQ	NC	NRQ	NRQ	NC
General Chemicals						
Cyanide (µg/sq. ft.)	5040.00	7680.00	41.51	NRQ	NRQ	NC
Total Organic Carbon (%)	NRQ	NRQ	NC	NRQ	NRQ	NC
Total Organic Content	NRQ	NRQ	NC	NRQ	NRQ	NC
pH	NRQ	NRQ	NC	NRQ	NRQ	NC
% Solids(% net weight)	NRQ	NRQ	NC	NRQ	NRQ	NC
Moisture (% net weight)	NRQ	NRQ	NC	NRQ	NRQ	NC

Notes:
NC - Not Calculated
NRQ- Not Required
"-" Not Detected

TABLE 2
FIELD SAMPLE AND DUPLICATE SUMMARY
SOIL SAMPLES - NAS ALAMEDA

Analyte	M-BG2 Field Sample	M-BG2 Field Dup. Sample	RPD (%)
Volatile Organic Compounds (µg/kg)			
Chloroethane			
Acetone	50.00	17.00	98.51
Semivolatile Organic Compounds (µg/kg)			
Acenaphthylene	150.00	<96	NC
Anthracene	240.00	<96	NC
Benzo(a)Anthracene	1600.00	160.00	163.64
Benzo(a)Pyrene	2600.00	<170	NC
Benzo(b)fluoranthene	2300.00	460.00	133.33
Benzo(k)fluoranthene	620.00	<120	NC
Benzo(ghi)perylene	1700.00	<190	NC
Bis(2-ethylhexyl)Phthalate	<120	250.00	NC
Chrysene	1500.00	270.00	138.98
Fluoranthene	3600.00	770.00	129.52
Indeno(1,2,3-CD) Pyrene	1800.00	<96	NC
Naphthalene	99.00	<96	NC
Phenanthrene	2200.00	280.00	154.84
Pyrene	6100.00	1100.00	138.89
Metals (mg/kg)			
Aluminum	5710.00	6230.00	8.71
Antimony	-	-	NC
Arsenic	1.84	1.23	39.74
Barium	37.80	42.80	12.41
Cadmium	-	-	NC
Calcium	2630.00	3070.00	15.44
Chromium	28.40	33.10	15.28
Cobalt	<4.16	4.82	NC
Copper	7.24	6.72	7.45
Iron	8520.00	9430.00	10.14
Lead	29.40	6.72	125.58
Magnesium	2290.00	2450.00	6.75
Manganese	77.90	84.00	7.54
Mercury	-	-	NC
Nickel	27.40	29.20	6.36
Potassium	882.00	967.00	9.19
Silver	-	-	NC
Sodium	441.00	397.00	10.50
Vanadium	21.50	23.30	8.04
Zinc	24.60	24.50	0.41
Hexavalent chromium	-	-	NC
Petroleum Hydrocarbons (mg/kg)	<34.6	73.60	NC
General Chemicals			
Cyanide (mg/kg)	-	-	NC
Total Organic Carbon (%)	0.52	0.41	25.00
Total Organic Content	0.90	0.70	25.00
pH	8.10	7.60	6.37
% Solids(% net weight)	82.30	83.60	1.57
Moisture (% net weight)	17.70	16.40	7.62

Notes:
NC - Not Calculated
NRQ- Not Required
"-" Not Detected

TABLE 2
FIELD SAMPLE AND DUPLICATE SUMMARY
SOIL SAMPLES - NAS ALAMEDA

Analyte	B-05PS-01 Field Sample	B-05PS-01 Field Dup. Sample	B-05PS-01 RPD (%)	B-05HW-02 Field Sample	B-05HW-02 Field Dup. Sample	B-05HW-02 RPD (%)
Volatile Organic Compounds (µg/kg)						
Chloroethane	<6.5	16.00	NC	-	-	NC
Acetone	28.00	21.00	28.57	23.00	29.00	23.08
Semivolatile Organic Compounds (µg/kg)						
Acenaphthylene	-	-	NC	-	-	NC
Anthracene	-	-	NC	-	-	NC
Benzo(a)Anthracene	-	-	NC	-	-	NC
Benzo(a)Pyrene	-	-	NC	-	-	NC
Benzo(b)fluoranthene	-	-	NC	-	-	NC
Benzo(k)fluoranthene	-	-	NC	-	-	NC
Benzo(ghi)perylene	-	-	NC	-	-	NC
Bis(2-ethylhexyl)Phthalate	-	-	NC	-	-	NC
Chrysene	-	-	NC	-	-	NC
Fluoranthene	-	-	NC	-	-	NC
Indeno(1,2,3-CD) Pyrene	-	-	NC	-	-	NC
Naphthalene	-	-	NC	-	-	NC
Phenanthrene	-	-	NC	-	-	NC
Pyrene	-	-	NC	-	-	NC
Metals (mg/kg)						
Aluminum	3950.00	2840.00	32.70	5650.00	4590.00	20.70
Antimony	-	-	-	-	-	-
Arsenic	4.45	3.10	35.76	1.68	1.50	11.32
Barium	28.40	19.40	37.66	53.20	41.80	24.00
Cadmium	133.00	<0.934	NC	-	-	-
Calcium	1870.00	8440.00	127.45	2230.00	1730.00	25.25
Chromium	850.00	16.70	192.29	29.10	26.90	7.86
Cobalt	5.19	4.45	15.35	4.52	5.14	12.84
Copper	11.20	6.02	60.16	5.56	5.71	2.66
Iron	8580.00	6110.00	33.63	9730.00	8870.00	9.25
Lead	2.15	3.20	39.25	2.48	2.02	20.44
Magnesium	2080.00	1890.00	9.57	2750.00	2740.00	0.36
Manganese	105.00	64.20	48.23	104.00	99.10	4.83
Mercury	-	-	-	-	-	-
Nickel	42.80	14.30	99.82	31.10	32.20	3.48
Potassium	688.00	859.00	22.11	1070.00	988.00	7.97
Silver	4.90	<1.15	NC	-	-	-
Sodium	492.00	850.00	53.35	730.00	667.00	9.02
Vanadium	18.70	11.80	45.25	20.00	16.70	17.98
Zinc	16.50	18.30	10.34	24.20	23.10	4.65
Hexavalent chromium	143.00	242.00	51.43	291.00	962.00	107.10
Petroleum Hydrocarbons (mg/kg)	-	-	-	-	-	-
General Chemicals						
Cyanide (mg/kg)	-	-	-	-	-	-
Total Organic Carbon (%)	-	-	-	-	-	-
Total Organic Content	-	-	-	-	-	-
pH	9.00	9.60	6.45	8.00	7.70	3.82
% Solids(% net weight)	77.00	82.00	6.29	81.30	82.50	1.47
Moisture (% net weight)	23.00	18.00	24.39	18.70	17.50	6.63

Notes:
NC - Not Calculated
NRQ- Not Required
"-" Not Detected

determine whether the value is a laboratory artifact or an altered value. If the compound is a common laboratory contaminant, methylene chloride, acetone, toluene, 2-butanone, or one of the phthalate esters, the value in the blank is multiplied by ten. If the sample value is greater than the multiplied value, then the sample amount is not qualified. If the sample value is less than the multiplied amount, then the sample value is qualified as an undetected estimate. Additionally, if the compound is not one of the common laboratory contaminants, then the value is multiplied by five and the sample is compared in the same format.

LCS is a useful tool in determining if recoveries are non-compliant due to matrix affect indicative of the site or if they are due to laboratory error.

C.2.2.1 Source Sample. One representative sample was taken from the on-site water source used for equipment decontamination before the final purified water is poured on and through the equipment. Source water samples allow determination of target compound background levels in equipment rinsate blanks. Appendix E lists the analytical methods and results obtained from the most recent water source collected. Metal, as aluminum, calcium, iron, and sodium were detected in the sample. These metals were also detected in most of the field and equipment rinsate blanks and were qualified as estimates. This source water was taken from a fire hydrant located on base. Decontamination procedures required a distilled/deionized (DI) rinse after the source water decontamination which may limit the extent of the bias but not eliminate it.

1.2.2.2 Equipment Rinsate Blanks. The equipment rinsate blanks for this project were obtained by pouring purified water over and through cleaned and decontaminated field equipment. These blanks measure the cumulative contamination from field sampling equipment, source water, sample storage, and the site itself.

Alhambra Water provided the purified water source used for CTO 107 equipment rinsates. Appendix E contains the laboratory analysis report of water quality from Alhambra. Purified water provided is produced by reverse osmosis and triple deionization.

Equipment rinsate blanks were collected within the guidelines of the QAPjP and the JMM QAPjP Addendum were analyzed for all the parameters under investigation. The equipment rinsate blanks were collected for both water and soil sampling portions of the field program. Various metals and bis(2-ethyl hexyl)phthalate were found in several of the equipment rinsate blanks. The organic compound listed is a known laboratory contaminate, but the actual phthalate contamination may have originated from the purified water container. The associated laboratory method blanks contained these contaminants; bis(2-

ethyl hexyl)phthalate was qualified as an undetected estimate in the equipment rinsates based upon method blank contamination. Due to the presence of these analytes in the equipment rinsate blanks, the corresponding field results may be positively biased. The qualifying contamination rule performed on the method blanks is also applied for equipment rinsates. The results are presented in Table 3.

C.2.2.3 Trip Blanks. Trip blanks were shipped and analyzed with the VOC samples. Trip blanks provide information on the cumulative contamination derived from trip blank source water, sample transit, and sample storage. Trip blanks were shipped and analyzed with every cooler containing samples for VOC analyses. Table 4 lists all the trip blanks and associated results.

Two trip blanks contained methylene chloride; trip blank, TB2 had methylene chloride qualified as an undetected estimate due to method blank contamination, but TB1 contamination could not be qualified. The contamination may not be from sample transport but from laboratory contamination.

C.2.2.4 Method Blanks. Method blanks are ultra-pure water samples that contain all the reagents and have been through all the processing necessary for an analytical procedure. These blanks serve to measure the contamination from the laboratory water, instrumentation, reagents, and sample procedure. A method blank aids in distinguishing low level field contamination from lab contamination.

Method blank results for each analytical batch are included in their respective laboratory sample batch found in Appendix D. All method blank analyses were performed within guidelines of the QAPjP and the JMM QAPjP Addendum.

According to CLP protocol, for the following five compounds, the results are qualified by elevating the limit of detection when the sample concentration is less than ten times the blank concentration. The five common laboratory contaminants are methylene chloride, acetone, toluene, 2-butanone, and common phthalate esters. Other analytes or compounds are qualified based upon five times the method blank value. This CLP rule also applies to field blanks.

At every site, several samples were in QC batches that had detectable quantities of common laboratory contaminants in the associated method blank. The contaminants found in the VOC method blanks were acetone and methylene chloride. Bis (2-ethyl hexyl) phthalate was present in several SVOC method blanks.

Detectable quantities of these analytes in the associated samples were qualified due to the positive bias. The sample results are not corrected by subtracting the blank value. Rather, they are assessed by

TABLE 3

CTO 121 - MOD
EQUIPMENT RINSATE SUMMARY

Analyte	EB1	EB2	EB3
Volatile Organic Compounds (µg/L)	ND	ND	ND
Semivolatile Organic Compounds (µg/L)			
Bis(2-Ethylhexyl)Phthalate	5.10	1.60	NRQ
Metals (µg/L)			
Calcium	58.50	191.00	37.70
Iron	41.40	8.70	19.70
Manganese	2.80	2.10	ND
Sodium	240.00	267.00	171.00
Zinc	8.90	ND	ND
General Chemicals			
Chloride (mg/L)	<0.1	0.16	NRQ
Nitrate + Nitrite (mg/L)	0.02	0.03	NRQ
Alkalinity (mg/L CaCO3)	5.00	7.00	NRQ
Total Organic Carbon (mg/L)	12.30	8.10	NRQ
Dissolved Residue (mg/L)	<10.0	13.00	NRQ
Acidity (mg/L CaCO3)	5.10	4.70	NRQ
pH	8.00	8.00	1.2*
Specific Conductance (µmhos/cm)	NRQ	NRQ	NRQ

Notes
ND-not detected
NRQ-not required
*Post preservation pH reading

TABLE 4

CTO 121 - MOD
TRIP BLANK SUMMARY

Analyte	TB1	TB2	TB3	TB4	TB
Volatile Organic Compounds (µg/L)					
Methylene Chloride	4.40	3.80	3.90	5.2	ND
Acetone	ND	2.90	ND	ND	ND

Notes
ND-Not detected

comparing the result to a value 10 times the analyte concentration found in the method blank (USEPA, 1988). Samples that contain the contaminant at a concentration of 10 times or less than the method blank concentration are flagged with a "UJ" qualifier indicating an undetected estimated value. Samples that were qualified as estimates are listed within tables of each site section of this report.

C.2.3 Completeness and Comparability

Completeness is defined as the percentage of valid data relative to the total number of sample tests conducted. The goal set for completeness for all QC parameters, except sample holding times, is 90 percent. Although Canonie's QAPjP does not specify, the goal set for holding time is 95 percent. The comparability criterion is a characteristic which expresses that one data set can be compared to another. Comparability is a prime concern when existing data are being integrated into a continuing project data base.

The primary level of concern with regard to comparability is whether the field sampling techniques, analytical procedures, and concentration units of one data set can be compared with another. To ensure this comparability, field procedures are standardized by adhering to the standard operating procedures; laboratory procedures will follow USEPA analytical methods which utilize standard units of measurements. These criteria are evaluated in Section C5.

In this section, completeness of data was evaluated by assuring all analytical requests were met, samples were received in proper condition, and all the analyses were performed within analytical holding time. The analytical data were then evaluated for comparability of detection limits and associated dilution factors.

C.2.3.1 Completeness of Scheduled Analyses. Completeness is a comparison of the number of valid data obtained from a sample to the total number necessary to obtain project goals. The sample data were considered as valid if the data were not qualified or if the data were qualified as estimates. There were no rejected sample parameters due to QC. All scheduled analyses were performed, with the exception of cyanide not being analyzed on samples W04-13 and W05-01 due to insufficient number of wipes to perform the analyses; the samples will be re-collected. The criteria of 90% for completeness and comparability was surpassed for the water and soil program.

C.2.3.2 Sample Handling. Appendix F contains copies of the completed signed chains of custody. Most of samples were received intact and at the correct temperature. Listed below are those samples that were received broken or unacceptable.

Soil Samples

- B-05PS-05 one container received broken on 6/4/92

Water Samples

- M-BG4-GW two containers were received broken on 6/13/92.

C.2.3.3 Sample Holding Time Nonconformances. All soil pH data was noted for missed hold times. The established one day criteria is for water matrices, it is only a guideline for soil samples; therefore, soil data were not qualified.

Samples W05-05, W05-06, W05-07, W05-08, W05-09, and W05-dup missed the cyanide holding time by five to seven days; all sample results were qualified as estimates.

C.2.3.4 Reporting Limits and Sample Dilutions. The method reporting limit (MRL) for each analysis are provided in Appendix G. Samples required dilutions to meet the analytical method requirements of quantitation for the analyte. The MRL for these samples were multiplied by the dilution factor. All samples which required dilutions for quantitation contained high concentrations for the analytes found.

C.2.3.5 Comparability. Canonie's QAPjP incorporated EPA analytical methods. JMM believed that by analyzing VOC, SVOC, pesticides/PCBs, and metals following USEPA CLP protocols, data quality would be acceptable for NAS Alameda soil and water sample analyses. Comparison of Canonie data against ESE data is possible. Both the CLP and SW-846 methods contain the same analyte or compound list and the results are reported in the same units of measure. CLP methods provide additional QC for assessment of validity.

C.3 DEVIATIONS FROM THE QAPjP

This section addresses deviations from the analytical methods originally outlined in the QAPjP. Canonie's QAPjP lists EPA SW-846 analytical methods. JMM QAPjP Addendum changed the methods to utilize USEPA Contract Laboratory Program (CLP) protocol for VOC, SVOC, pesticides/PCBs, metals, and cyanide. The CLP protocols were recommended by JMM because the project required Level III assessment.

C.4 SAMPLE QUALITY SUMMARY

Analytical data collected at NAS Alameda for Addendum CTO 121 are of a known quality based on the QA/QC exercised during this phase. Although most of the data is acceptable, a percentage of the data is qualified due to variable events. Listed within the text of this report are informative summaries of all qualified samples and batches taken from the data review. Details of these data are discussed by parameter in Section C5.

C.5 QUALITY CONTROL RESULTS

This section provides an itemized summary of the field and laboratory quality control sample results which were used to meet the DQOs of the project. Detailed summaries that are specified on a per batch basis is found within Appendix H. Appendix D contains cross reference tables of the field and laboratory sample identification numbers. The Method Reporting Limits (MRL) for the measured analytes are included in Appendix G. The analytical results have been summarized and reported in the Analytical Data Report (ESE, 1992d). The following section lists samples by matrix type analyzed with each analysis and their acceptability based on the DQO defined in Section C.2 of this appendix. The QC results for the water and soil samples are evaluated against the control limits which are established in the JMM QAPjP Addendum 1991 which follows USEPA CLP Statement of Work (SOW) (EPA, 1988) and the project QAPjP (Canonie, 1990).

Data that did not meet acceptability limits were qualified. These data have been 'flagged' with EPA qualifiers. Data that has been qualified as estimates have a "J" suffix next to the analyte or compound value. Estimated data are usable for limited purposes for this project. Data that were qualified as undetected due to blank contamination have an "UJ" qualifier. These data were found to be less than the multiplier of the blank sample. None of the samples within this sampling effort were qualified as rejected.

C.5.1 Soil and Wipe Samples

Soil and wipe samples were collected from May 27 through June 9, 1992.

C.5.1.1 Volatile Organic Compounds. The maximum concentrations of acetone and methylene chloride within method blanks were found at 21 µg/kg and 6.4 µg/kg, respectively.

- Samples that had acetone qualified as undetected estimates based on blank contamination are as follows: M-BG1@2.0', M-BG-1@3.0', M-BG1@5.0', M-BG2@5.0', BG-DUP1, B-05HW-02@15', B-05HW-02@5.0', B-05HW-01@5.0', B-05HW-01@10.0', B-05HW-01@15',B-05BS-01@2.5', B-05BS-01@15', M-BG4@0.0', B-05PS-01@18.0', B-05PS-02@0.0', B-05PS-02@5.0', B-05PS-03@0.0', B-05PS-03@5.0', B-05PS-04@0.0', B-05PS-04@5.0', B-05PS-05@0.0', B-05PS-05@5.0', 05PS-Dup1, B-05WT-01, B-05WT-02, M-BG2@3.0', M-BG3@0.0', M-BG3@2.0', M-BG3@4.0', M-BG3@6.0', M-

BG4@7.5', M-BG4@10.0', B-05HW-02@0.0', B-05HW-02@10.0', 05HW-Dup1, B-05PS-01@0.0', B-05PS-01@5.0', and B-05BS-02@0.0'.

- Methylene chloride was not detected in any of the soil samples; therefore, methylene chloride qualification was not necessary.

Remaining QC were found acceptable.

C.5.1.2 Semivolatile Organic Compounds. The maximum concentration of bis(2-ethylhexyl)phthalate found within a method blank was at 290 µg/kg.

- Samples that had bis(2-ethylhexyl)phthalate qualified as undetected estimates based on blank contamination are as follows: BG-Dup1, B-05HW-02@0.0', M-05HW-01@0.0', M-05HW-01@10.0', M-05HW-01@15.0', 05HW-Dup1, M-05BS-01@2.5', M-05BS-01@6.0', M-05BS-01@15.0', B-05WT-01@10.0', B-05WT-02@10.0', and B-05BS-02@0.0'.

Several LCS and MS compounds exceeded criteria limits but, there were no positive values detected within the samples; samples were not qualified.

Three samples, BG-Dup1, M-05BS-01@2.5', and M-BG1@0.0', had one surrogate that exceeded CLP limits but, the samples were not qualified based upon the allowance of one acid and/or base-neutral surrogate to be out of compliance.

C.5.1.2 Organochlorine Pesticides and Polychlorinated Biphenyls. Two samples that had high DBC recoveries greater than 140% but did not have any positive results; therefore, data for M-BG4@7.5' and M-BG1@3.0' were not qualified.

C.5.1.3 Ethylene Dibromide. All associated QC was found acceptable; therefore sample data were not qualified.

C.5.1.4 Total Recoverable Petroleum Hydrocarbons. The maximum amount of hydrocarbons within the method blanks was found at 4.52 µg/g. All sample values were greater than five times the contamination found in the method blanks; therefore, sample data were not qualified.

C.5.1.5 Metals. The maximum concentrations of analytes found within method blanks are listed below:

Analyte	Concentration
Barium	0.005 mg/kg
Calcium	0.102 mg/kg

Copper	0.098 mg/kg
Sodium	0.148 mg/kg
Zinc	0.011 mg/kg

Samples within batches that contained method blank contamination were not qualified as undetected for these analytes because sample concentrations were greater than five times the values found within the method blank.

Samples that were qualified based on LCS recoveries are as follows:
Due to LCS recovery problems, the following analytes are considered estimated (J) for positive results and negative (UJ) results:

- Copper, potassium, and antimony in the following samples: M-BG1@0.0', MBG1@2.0', M-BG1@3.0', M-BG1@5.0', M-BG2@0.0', M-BG2@2.0', M-BG2@3.0, M-BG2@5.0, M-BG3@0.0', M-BG3@2.0', M-BG3@4.0', M-BG3@6.0', M-BG4@0.0', M-BG4@2.0', M-BG4@7.5', M-BG4@10.0', BG-DUP1, B-05HW-02@0.0', B-05HW-02@5.0', B-05HW-02@10.0', M-05HW-01@0.0', M-05HW-01@5.0', M-05HW-01@10.0, M-05HW-01@15.0', 05HW-DUP1, M-05BS-01@0.0', M-05BS-01@2.5', M-05BS-01@6.0', and M-05BS-01@15.0'.

- Sodium in the following samples: M-BG1@0.0', M-BG1@2.0', M-BG1@3.0', M-BG1@5.0', M-BG2@0.0', M-BG2@2.0', M-BG2@3.0, M-BG2@5.0, M-BG3@0.0', M-BG3@2.0', M-BG3@4.0', M-BG3@6.0', M-BG4@0.0', M-BG4@2.0', M-BG4@7.5', M-BG4@10.0', BG-DUP1, B-05HW-02@0.0', B-05HW-02@5.0', B-05HW-02@10.0', M-05HW-01@0.0', M-05HW-01@5.0', M-05HW-01@10.0, M-05HW-01@15.0', 05HW-DUP1, M-05BS-01@0.0', M-05BS-01@2.5', M-05BS-01@6.0', and M-05BS-01@15.0'.

- Aluminum and antimony in the following samples: W05-01, W05-02, W05-03, W05-04, B05PS-01@0.0', B05PS-01@5.0', B05PS-01@18.0', B05PS-02@0.0', B05PS-02@5.0', B05PS-03@0.0', B05PS-04@0.0', B05PS-04@5.0', 05PS-DUP1, B-05SP-01@0.0', B-05WT-01@10.0', B-05WT-02@10.0', and B-05BS-02@0.0'.

- Aluminum, copper, potassium, and antimony in the following samples: W04-03, W04-04, W04-05, W04-06, and B-05PS-03@5.0'.

The following samples were qualified as estimates for the following analytes due to MS/MSD recoveries that did not meet CLP criteria:

- BG-DUP1 and 05PS-DUP1 for aluminum, calcium, and iron.
- 05HW-DUP1 for aluminum and iron.
- W05-08 for barium, calcium, nickel, lead, and zinc.
- W04-07 for barium and zinc.
- W04-03 for silver, aluminum, calcium cadmium, chromium, copper, iron, magnesium, manganese, sodium, lead, antimony, and zinc.
- B-05PS-03@5.0' for aluminum and iron.

Sample replicates that resulted with RPD values greater than 20 are listed below.

- Values of calcium and copper were qualified as estimates in the following samples: M-BG1@0.0', MBG1@2.0', M-BG1@3.0', M-BG1@5.0', M-BG2@0.0', M-BG2@2.0', M-BG2@3.0, M-BG2@5.0, M-BG3@0.0', M-BG3@2.0', M-BG3@4.0', M-BG3@6.0', M-BG4@0.0', M-BG4@2.0', M-BG4@7.5', M-BG4@10.0', BG-DUP1, B-05HW-02@0.0', B-05HW-02@5.0', B-05HW-02@10.0', M-05HW-01@0.0', M-05HW-01@5.0', M-05HW-01@10.0, M-05HW-01@15.0', 05HW-DUP1, M-05BS-01@0.0', M-05BS-01@2.5', M-05BS-01@6.0', and M-05BS-01@15.0'.

- Barium, sodium, and lead were qualified as estimates in the following samples: W05-01, W05-02, W05-03, W05-04, B05PS-01@0.0', B05PS-01@5.0', B05PS-01@18.0', B05PS-02@0.0', B05PS-02@5.0', B05PS-03@0.0', B05PS-04@0.0', B05PS-04@5.0', 05PS-DUP1, B-05SP-01@0.0', B-05WT-01@10.0', B-05WT-02@10.0', and B-05BS-02@0.0'.

- Values of lead and zinc were qualified as estimates in the following samples: W04-03, W04-04, W04-05, and W04-06.

Samples qualified as estimates due to serial dilution replicate RPDs greater than 10 are as follows:

- Cadmium, cobalt, potassium, sodium, and copper values were qualified as estimates in samples M-BG1@0.0', MBG1@2.0', M-BG1@3.0', M-BG1@5.0', M-BG2@0.0', M-BG2@2.0', M-BG2@3.0, M-BG2@5.0, M-BG3@0.0', M-BG3@2.0', M-BG3@4.0', M-BG3@6.0', M-BG4@0.0', M-BG4@2.0', M-BG4@7.5', M-BG4@10.0', BG-DUP1, B-05HW-02@0.0', B-05HW-02@5.0', B-05HW-02@10.0', M-05HW-01@0.0', M-05HW-01@5.0', M-05HW-01@10.0, M-05HW-01@15.0', 05HW-DUP1, M-05BS-01@0.0', M-05BS-01@2.5', M-05BS-01@6.0', and M-05BS-01@15.0'.

- Barium, sodium, and lead were qualified as estimates in the following samples: W05-01, W05-02, W05-03, W05-04, B05PS-01@0.0', B05PS-01@5.0', B05PS-01@18.0', B05PS-02@0.0', B05PS-02@5.0', B05PS-03@0.0', B05PS-04@0.0', B05PS-04@5.0', 05PS-DUP1, B-05SP-01@0.0', B-05WT-01@10.0', B-05WT-02@10.0', and B-05BS-02@0.0'.

- Beryllium, cadmium, copper, chromium, nickel, silver, lead, and antimony were qualified as estimates in the following samples: W05-01, W05-02, W05-03, W05-04, B05PS-01@0.0', B05PS-01@5.0', B05PS-01@18.0', B05PS-02@0.0', B05PS-02@5.0', B05PS-03@0.0', B05PS-04@0.0', B05PS-04@5.0', 05PS-DUP1, B-05SP-01@0.0', B-05WT-01@10.0', B-05WT-02@10.0', and B-05BS-02@0.0'.

- Vanadium and antimony values of the following samples were qualified as estimates: W04-07, W04-08, W04-09, W04-10, W04-11, W04-12, W04-13, W04-14, W04-DUP, W05-10, W05-11, and W05-12.

- Potassium was qualified as estimates in the following samples: W04-03, W04-04, W04-05, and W04-06.

- Cadmium, potassium, nickel, and vanadium was qualified as estimates in sample B-05PS-03@5.0'.

C.5.1.6 Atomic Absorption and Graphite Furnace Metals. This group of metals includes arsenic, lead, mercury, selenium, and thallium.

The positive arsenic values of M-BG2@5.0' and B-05PS-03@5.0' were qualified as estimate values due to post digestion spike recoveries below 85%.

The MS recovery of sample W04-03 was found below the acceptable recovery of 75%; therefore, the positive arsenic result was qualified as an estimate value.

The lead replicate RPD values were greater than 20; therefore, BG-DUP1, B-0PS-01@0.0', B-0PS-01@5.0', B-0PS-01@18.0', B-0PS-02@0.0', B-0PS-02@5.0', B-0PS-03@0.0', B-0PS-04@0.0', B-0PS-04@5.0', B-0PS-05@0.0', B-0PS-05@5.0', 05PS-DUP1, B-05SP-01@0.0', B-05WT-01@10.0', B-05WT-02@10.0', and B-05BS-02@0.0'.

In addition to qualification based on lead replicate RPD values, sample 05PS-DUP1 was qualified as an estimate due to a low MS recovery of 68%.

All mercury QC were found acceptable; therefore, sample data were not qualified.

Many of the selenium sample values were qualified as estimates due to post digestion spike recoveries found below 85%; the samples qualified are as follows: M-BG2@5.0', W05-08, W05-04, W05-08, W04-08, W04-12, W05-10 and W05-11.

Sample W04-03 selenium value was qualified as an estimate due to a low MS recovery below 75%.

Selenium replicate B-05PS-03 gave rise to an RPD of 38.6%; this sample was qualified as an estimate value.

The following thallium samples were qualified as estimates due to post digestion spike recoveries below 85%: M-BG2@5.0', M-BG3@0.0', W04-03, and W04-04.

C.5.1.7 Hexavalent Chromium. The maximum concentration of hexavalent chromium was found at 0.217 mg/kg. All samples that were associated with contaminated method blanks resulted in values either greater than five times the amount of the method blank or were non-detected; therefore, samples were not qualified based upon method blank contamination.

The following samples were qualified as estimates based on replicate RPDs greater than thirty: W04-03, W04-04, W04-05, W04-06, W05-01, B-05PS-02@0.0', B-PS-02@5.0', B-05PS-03@0.0', B-05PS-03@5.0', B-05PS-04@0.0', B-05PS-04@5.0', B-05PS-05@0.0', B-05PS-05@5.0', 05PS-DUP1, B-05SP-01@0.0', B-05WT-01@10.0', B-05WT-02@10.0', B-05HW-02@0.0', M-05BS-01@0.0', M-05BS-01@2.5', M-05BS-01@6.0', and M-05BS-01@15.0'.

Due to matrix interferences, most of the hexavalent chromium resulted in values greater than total chromium values of the same samples; therefore, samples that demonstrated the exceedance were qualified as estimates. The following samples had hexavalent chromium exceed total chromium values: W04-07, W04-08, W04-09, W04-10, W04-11, W04-14, W05-07, W05-08, W05-09, W05-10, W04-03, W04-04, W04-05, W05-01, B-05PS-01@0.0', B-05PS-01@5.0', B-05PS-02@0.0', B-05PS-02@5.0', B-05PS-03@0.0', B-05PS-03@5.0', B05PS-04@0.0', B-05PS-04@5.0', B-05PS-05@0.0', B-05PS-05@5.0', 05PS-DUP1, B-05SP-01@0.0', B-05WT-01@10.0, B-05WT-02@10.0', B-05HW-02@0.0', B-05HW-02@5.0', B-05HW-02@10.0', M-05HW-01@0.0', M-05HW-01@5.0', M-05HW-01@15.0', 05HW-DUP1,B-05BS-02@0.0', M-05BS-01@0.0', M-05BS-01@2.5', M-05BS-01@6.0', and M-05BS-01@15.0'.

C.5.1.8 Cyanide. The analytical holding time of 14 days was exceeded by five to seven days for the following wipe samples; they were qualified as estimates: W05-05, W05-06, W05-07, W05-08, W05-09, and W05-DUP.

Due to MS recovery of 62%, sample W04-DUP was qualified as an estimate value.

C.5.1.9 Hydrogen Ion. Hydrogen ion measurements, known as pH, had acceptable QC. The soil and wipe samples exceeded the one day holding time, but the holding time of 24 hours is applicable to water matrices and it is only considered a guideline for solids. Therefore, data were not qualified.

C.5.1.10 Percent Moisture. All associated QC for percent moisture, method blanks and replicates were found acceptable; therefore, data were not qualified.

C.5.1.11 Total Organic Carbon. Sample B-05SP-01@0.0' was qualified as an estimate due to the replicate RPD greater than 20. The remaining QC were found acceptable.

C.5.2 Water Samples

Water samples were collected from June 3 through June 15, 1992.

C.5.2.1 Volatile Organic Compounds. Both acetone and methylene chloride were detected in several method blanks at maximum concentrations of 2.3 µg/L and 3.4 µg/L, respectively. Samples that had less than ten times the amounts found in the associated blank were qualified as non-detected estimates (UJ). Sample B-05WT-01 and trip blank TB7 acetone values were qualified as non-detected. Additionally, the methylene chloride value found in trip blank TB7 was qualified as non-detected.

One LCS recovery for 1,1-dichloroethene was found at 57% with a lower limit of 61%. All associated sample surrogate and MS/MSD recoveries were found acceptable; therefore, sample data were not qualified.

C.5.2.2 Semivolatile Organic Compounds. The maximum concentration of the common laboratory contaminant bis(2-ethylhexyl)phthalate was found at 3.7 µg/L. The following samples were qualified as non-detected estimates due to their values found less than ten times the amount found within their associated method blank: B05WT-02, M-BG2-GW, M-BG3-GW, M-BG4-GW, EB1, EB2, B-05BS-01, M-BG-DUP1, and B-05HW-01.

C.5.2.3 Organochlorine Pesticides and Polychlorinated Biphenyls. All associated QC were found acceptable; therefore, sample data were not qualified.

C.5.2.4 Chlorinated Herbicides. Due to sample surrogate recoveries below 80%, the following samples were qualified as estimates: M-BG1-GW, M-BG2-GW, M-BG3-GW, M-BG4-GW, and EB1. All samples had no detectable concentrations of herbicides.

C.5.2.5 Organophosphorus Pesticides. All associated QC were found acceptable; therefore, sample data were not qualified.

C.5.2.6 Monuron and Diuron. All associated QC were found acceptable; therefore, sample data were not qualified.

C.5.2.7 Glyphosate. Sample M-BG4-GW resulted in low MS/MSD recoveries below 60%. Because there were no sample surrogate recoveries present, matrix interference may have suppressed the glyphosate surrogate. Therefore, samples M-BG1-GW, M-BG2-GW, M-BG3-GW, M-BG4-GW, EB1 and EB2 were qualified as estimates.

C.5.2.8 Ethylene Dibromide. All associated QC was found acceptable; therefore sample data were not qualified.

C.5.2.9 Total Recoverable Petroleum Hydrocarbons. One method blank contained 0.02 mg/L of petroleum hydrocarbons possible due to a laboratory artifact from calibration. All associated sample values were non-detected; therefore, sample data were not qualified.

C.5.2.9 Oil and Grease. The method blank contained 0.08 mg/L, this value qualified sample M-BG2-GW as an undetected estimate. All remaining QC was found acceptable.

C.5.2.10 Metals. The following analytes were detected in several method blanks at the listed maximum concentrations:

Analyte	Concentration
Calcium	56.2 µg/L
Iron	13.8 µg/L
Manganese	1.4 µg/L

- EB1 and EB2 manganese values were qualified as undetected estimates. M-BGDUP1 iron value was qualified as an undetected estimate.

Due to replicate RPD values greater than 20, the following sample iron values were qualified as estimates: EB1, EB2, EB3, B-05HW-01, B-05BS-01, B-05PS-02, B-05PS-03, B-05PS-04, B-05PS-05, B-05PS-01, B-05PS-DUP, B-05WT-01 and B-05WT-02.

Sample M-BG-DUP1 was also qualified for zinc due to a replicate RPD value greater than 20.

C.5.2.11 Atomic Absorption and Graphite Furnace Metals. This group of metals includes arsenic, lead, mercury, selenium, and thallium.

Samples M-BG-DUP1, B-05PS-03, B-05WT-02, and B-05HW-01 positive arsenic values were qualified as estimates due to high post digestion spike recoveries greater than 115%. Sample M-BG4-GW did not have a positive value; therefore, this sample was not qualified. All remaining QC was found acceptable.

One method blank contained 0.3 µg/L of lead, but all associated sample values were greater than five times the amount found in the method blank; therefore, sample data were not qualified based on contamination.

The non-detected value of sample M-BG1-GW was qualified as an undetected estimate due to a low post digestion spike recovery of 61.8%. All remaining QC was found acceptable.

All mercury QC was found acceptable; therefore, sample data were not qualified.

Selenium post digestion spike recoveries were found below the acceptability limit of 85% in the following samples: M-BG1-GW, M-BG2-GW, B-05PS-04; these sample values were qualified as estimates for their non-detected values. M-BG3-GW post digestion spike recovery was found above the 115% acceptability limit, but the sample result was undetected; therefore, the sample was not qualified.

Thallium was found in one method blank at 0.3 µg/L, but none of the samples had positive values, data were not qualified. All remaining QC were found acceptable.

C.5.2.12 Hexavalent Chromium. The MS sample B-05HW-01 resulted in a low recovery below 83%, the undetected value was qualified as an estimated value.

As demonstrated in the soil and wipe samples, the water matrices contained interferences that increased the value of hexavalent chromium over the total chromium results within the same field samples; therefore, the following samples were qualified as estimates due to the exceedance: B-05PS-02, B-05PS-03, B-05PS-04, B-05PS-01, B-05WT-01, and B-05WT-02.

C.5.2.13 Cyanide. One of the method blanks contained 0.3 µg/L of cyanide; this was probably attributed to a laboratory artifact from calibration of the instrument. None of the cyanide values were qualified based on method blank contamination.

Sample B-05PS-DUP was spiked for the MS QC sample of one batch; the recovery was slightly elevated above 125%; therefore, the positive value was qualified as an estimate.

C.5.2.14 Acidity. EB1 and EB2 were qualified as undetected estimates due to 1.8 mg/L acidity within the method blank. The remaining QC were found to be acceptable.

C.5.2.15 Alkalinity. EB1 and EB2 were qualified as undetected estimates due to 3.0 mg/L alkalinity within the method blank. The remaining QC were found to be acceptable.

C.5.2.16 Biochemical Oxygen Demand. One of the method blanks contained 0.2 mg/L which qualified sample M-BG3-GW as a undetected estimate. The remaining QC were found to be acceptable.

C.5.2.17 Chemical Oxygen Demand. The method blanks, LCS, and replicate QC were found acceptable, but the MS and spike duplicate had low recoveries below the control limit of 90%. Sample M-BG1-GW was qualified as an estimated value.

C.5.2.18 Common Anions. The common anions are chloride, fluoride, and sulfate. All associated QC was found acceptable.

C.5.2.19 Hardness. All hardness QC was found acceptable; therefore, sample data were not qualified.

C.5.2.20 Nitrate and Nitrite. Two samples that were spiked for MS resulted in low recoveries below the lower limit of 90%. Samples EB2 and M-BG4-GW were qualified as estimates; the remaining QC was found acceptable.

C.5.2.21 Total Dissolved Solids. One of the method blanks contained 9 mg/L of solids. Sample EB2 was qualified as undetected estimate due to method blank contamination. The remaining QC were found to be acceptable.

C.5.2.22 Total Organic Carbon. One sample, M-BG3-GW was spiked for the MS QC sample; the recoveries were found below the acceptability limit of 87% due to the matrix interference of the unspiked value found within the sample. The sample was qualified as an estimate. The remaining QC was acceptable.

C.6 CONCLUSIONS

By reviewing the data, the assessment of the analytical data meets the quality objectives stated in the Canonie QAPjP and JMM QAPjP addendum. Laboratory and field non-conformance's were kept at a minimum, this includes sample handling from the field to possession of the samples to the laboratory. The sample data is acceptable and usable. This includes both non-qualified and estimated data. Data that were qualified as estimates were a reflection of the complex matrices. The amount of QC scheduled for the project exceeds the 90% completion goal of the QAPjP.

APPENDIX D

QUALITY CONTROL DATA

SOIL AND WIPE QC

Volatile Organic Compounds

ESE BATCH : G28646
CLASSIFICATION : VOLATILE ORGANIC CMPDS - CLP SOW 2/88

STATUS : FINAL

METHOD BLANK CORRECTION METHOD : NONE

FIELD GRP	PROJECT NUMBER	PROJECT NAME	LAB COORDINATOR
ALS2B	3914042 0201	JMM/ALAMEDA CTO-121	JACKIE HARGROVE-ELLI

SAMPLE CODE	CLIENT ID	DATE ANALYZED	TIME ANALYZED
ALS2B*43	BG-DUP1	06/04/92	04:14PM
ALS2B*27	M-BG1	06/04/92	06:20PM
ALS2B*83	M-05BS-01	06/04/92	07:03PM
ALS2B*77	M-05HW-01	06/04/92	07:46PM
ALS2B*86	M-05BS-01	06/04/92	08:30PM
ALS2B*85	M-05BS-01	06/04/92	09:14PM
ALS2B*30	M-BG1	06/05/92	12:32AM
ALS2B*29	M-BG1	06/05/92	01:14AM
ALS2B*28	M-BG1	06/05/92	01:56AM
ALS2B*84	M-05BS-01	06/05/92	02:38AM
ALS2B*80	M-05HW-01	06/05/92	03:20AM
ALS2B*79	M-05HW-01	06/05/92	04:03AM
ALS2B*78	M-05HW-01	06/05/92	04:45AM
ALS2B*76	B-05HW-02	06/05/92	05:27AM
ALS2B*74	B-05HW-02	06/05/92	06:52AM
ALS2B*34	M-BG2	06/05/92	08:16AM

ESE BATCH : G28646

Method Blank Sample Summary

DATE	SAMPLE	STORET	PARAMETER	UNITS	FOUND
06/04/92	MB*QC*0604	34421*CLP1	CHLOROMETHANE	UG/KG-DRY	ND
06/04/92	MB*QC*0604	34416*CLP1	BROMOMETHANE	UG/KG-DRY	ND
/04/92	MB*QC*0604	34495*CLP1	VINYL CHLORIDE	UG/KG-DRY	ND
/04/92	MB*QC*0604	34314*CLP1	CHLOROETHANE	UG/KG-DRY	ND
06/04/92	MB*QC*0604	34426*CLP1	METHYLENE CHLORIDE	UG/KG-DRY	ND
06/04/92	MB*QC*0604	75059*CLP1	ACETONE	UG/KG-DRY	20
06/04/92	MB*QC*0604	78544*CLP1	CARBON DISULFIDE	UG/KG-DRY	ND
06/04/92	MB*QC*0604	34504*CLP1	1,1-DICHLOROETHYLENE	UG/KG-DRY	ND
06/04/92	MB*QC*0604	34499*CLP1	1,1-DICHLOROETHANE	UG/KG-DRY	ND
06/04/92	MB*QC*0604	96464*CLP1	1,2-DICHLOROETHENE(TOTAL)	UG/KG	ND
06/04/92	MB*QC*0604	34318*CLP1	CHLOROFORM	UG/KG-DRY	ND
06/04/92	MB*QC*0604	34534*CLP1	1,2-DICHLOROETHANE	UG/KG-DRY	ND
06/04/92	MB*QC*0604	75078*CLP1	METHYL ETHYL KETONE	UG/KG-DRY	ND
06/04/92	MB*QC*0604	34509*CLP1	1,1,1-TRICHL'ETHANE	UG/KG-DRY	ND
06/04/92	MB*QC*0604	34299*CLP1	CARBON TETRACHLORIDE	UG/KG-DRY	ND
06/04/92	MB*QC*0604	98583*CLP1	VINYL ACETATE	UG/KG-DRY	ND
06/04/92	MB*QC*0604	34330*CLP1	BROMODICHLOROMETHANE	UG/KG-DRY	ND
06/04/92	MB*QC*0604	34544*CLP1	1,2-DICHLOROPROPANE	UG/KG-DRY	ND
06/04/92	MB*QC*0604	34702*CLP1	CIS-1,3-DICHLORO PROPENE	UG/KG-DRY	ND
06/04/92	MB*QC*0604	34487*CLP1	TRICHLOROETHENE	UG/KG-DRY	ND
06/04/92	MB*QC*0604	34309*CLP1	DIBROMOCHLOROMETHANE	UG/KG-DRY	ND
06/04/92	MB*QC*0604	34237*CLP1	BENZENE	UG/KG-DRY	ND
06/04/92	MB*QC*0604	34514*CLP1	1,1,2-TRICHL'ETHANE	UG/KG-DRY	ND
06/04/92	MB*QC*0604	34697*CLP1	TRANS-1,3-DICHLORO PROPENE	UG/KG-DRY	ND
06/04/92	MB*QC*0604	34290*CLP1	BROMOFORM	UG/KG-DRY	ND
06/04/92	MB*QC*0604	75166*CLP1	2-HEXANONE	UG/KG-DRY	ND
06/04/92	MB*QC*0604	75169*CLP1	METHYL ISOBUT'KETONE	UG/KG-DRY	ND
06/04/92	MB*QC*0604	34478*CLP1	TETRACHLOROETHENE	UG/KG-DRY	ND
06/04/92	MB*QC*0604	34519*CLP1	1,1,2,2-TETRACHLORO ETHANE	UG/KG-DRY	ND
06/04/92	MB*QC*0604	34483*CLP1	TOLUENE	UG/KG-DRY	ND
06/04/92	MB*QC*0604	34304*CLP1	CHLOROBENZENE	UG/KG-DRY	ND
06/04/92	MB*QC*0604	34374*CLP1	ETHYLBENZENE	UG/KG-DRY	ND
06/04/92	MB*QC*0604	45510*CLP1	XYLENE,SED	UG/KG-DRY	ND
06/04/92	MB*QC*0604	75192*CLP1	STYRENE	UG/KG-DRY	ND

Standard Matrix Spike Recovery Summary

TE	SAMPLE	STORET	PARAMETER	%RECV	RECV CRIT	UNITS	TARGET	FOUND
'04/92	SP1*QC*1	34504*CLP1	1,1-DICHLOROETHYLENE	84	59-172	UG/KG-DRY	50	42
/04/92	SP1*QC*1	34487*CLP1	TRICHLOROETHENE	94	62-137	UG/KG-DRY	50	47
06/04/92	SP1*QC*1	34237*CLP1	BENZENE	96	66-142	UG/KG-DRY	50	48
06/04/92	SP1*QC*1	34483*CLP1	TOLUENE	90	59-139	UG/KG-DRY	50	45
06/04/92	SP1*QC*1	34304*CLP1	CHLOROBENZENE	104	60-133	UG/KG-DRY	50	52

Sample Matrix Spike Recovery Summary

DATE	SAMPLE	STORET	PARAMETER	%RECV	RECV CRIT	UNSPIKED	UNITS	TARGET	FOUND	RPD
06/04/92	SPM1*ALS2B*43	34504*CLP1	1,1-DICHLOROETHYLENE	85	59-172	0.0	UG/KG-DRY	60	51	
06/04/92	SPM1*ALS2B*43	34487*CLP1	TRICHLOROETHENE	92	62-137	0.0	UG/KG-DRY	60	55	
06/04/92	SPM1*ALS2B*43	34237*CLP1	BENZENE	95	66-142	0.0	UG/KG-DRY	60	57	
06/04/92	SPM1*ALS2B*43	34483*CLP1	TOLUENE	88	59-139	0.0	UG/KG-DRY	60	53	
06/04/92	SPM1*ALS2B*43	34304*CLP1	CHLOROBENZENE	100	60-133	0.0	UG/KG-DRY	60	60	
06/04/92	SPM2*ALS2B*43	34504*CLP1	1,1-DICHLOROETHYLENE	82	59-172	0.0	UG/KG-DRY	60	49	3.6
06/04/92	SPM2*ALS2B*43	34487*CLP1	TRICHLOROETHENE	92	62-137	0.0	UG/KG-DRY	60	55	0.0
06/04/92	SPM2*ALS2B*43	34237*CLP1	BENZENE	95	66-142	0.0	UG/KG-DRY	60	57	0.0
06/04/92	SPM2*ALS2B*43	34483*CLP1	TOLUENE	88	59-139	0.0	UG/KG-DRY	60	53	1.1
06/04/92	SPM2*ALS2B*43	34304*CLP1	CHLOROBENZENE	98	60-133	0.0	UG/KG-DRY	60	59	1.0

Surrogate Spike Recovery Summary

DATE	SAMPLE	STORET	PARAMETER	UNITS	TARGET	FOUND	%RECV	RECV CRIT
06/04/92	MB*QC*0604	97031*SUR	1,2-DICHLOROETHANE-D(4)	UG/KG-DRY	50	53	110	70-121
06/04/92	MB*QC*0604	97026*SUR	TOLUENE-D(8)	UG/KG-DRY	50	52	100	81-117
06/04/92	MB*QC*0604	97027*SUR	BROMOFLUOROBENZENE	UG/KG-DRY	50	54	110	74-121
06/04/92	DA*ALS2B*43	97031*SUR	1,2-DICHLOROETHANE-D(4)	UG/KG-DRY	50	48	96	70-121
06/04/92	DA*ALS2B*43	97026*SUR	TOLUENE-D(8)	UG/KG-DRY	50	53	110	81-117
06/04/92	DA*ALS2B*43	97027*SUR	BROMOFLUOROBENZENE	UG/KG-DRY	50	49	98	74-121
06/04/92	SPM1*ALS2B*43	97031*SUR	1,2-DICHLOROETHANE-D(4)	UG/KG-DRY	50	49	98	70-121
06/04/92	SPM1*ALS2B*43	97026*SUR	TOLUENE-D(8)	UG/KG-DRY	50	54	110	81-117
06/04/92	SPM1*ALS2B*43	97027*SUR	BROMOFLUOROBENZENE	UG/KG-DRY	50	50	100	74-121
06/04/92	SPM2*ALS2B*43	97031*SUR	1,2-DICHLOROETHANE-D(4)	UG/KG-DRY	50	49	98	70-121
06/04/92	SPM2*ALS2B*43	97026*SUR	TOLUENE-D(8)	UG/KG-DRY	50	53	110	81-117
/04/92	SPM2*ALS2B*43	97027*SUR	BROMOFLUOROBENZENE	UG/KG-DRY	50	49	98	74-121
04/92	DA*ALS2B*27	97031*SUR	1,2-DICHLOROETHANE-D(4)	UG/KG-DRY	50	47	94	70-121
/04/92	DA*ALS2B*27	97026*SUR	TOLUENE-D(8)	UG/KG-DRY	50	52	100	81-117
06/04/92	DA*ALS2B*27	97027*SUR	BROMOFLUOROBENZENE	UG/KG-DRY	50	48	96	74-121
06/04/92	DA*ALS2B*83	97031*SUR	1,2-DICHLOROETHANE-D(4)	UG/KG-DRY	50	48	96	70-121

ESE BATCH : G28646

Surrogate Spike Recovery Summary

DATE	SAMPLE	STORET	PARAMETER	UNITS	TARGET	FOUND	%RECV	RECV CRIT
06/04/92	DA*ALS2B*83	97026*SUR	TOLUENE-D(8)	UG/KG-DRY	50	53	110	81-117
06/04/92	DA*ALS2B*83	97027*SUR	BROMOFLUOROBENZENE	UG/KG-DRY	50	53	110	74-121
06/04/92	DA*ALS2B*77	97031*SUR	1,2-DICHLOROETHANE-D(4)	UG/KG-DRY	50	49	98	70-121
06/04/92	DA*ALS2B*77	97026*SUR	TOLUENE-D(8)	UG/KG-DRY	50	56	110	81-117
06/04/92	DA*ALS2B*77	97027*SUR	BROMOFLUOROBENZENE	UG/KG-DRY	50	47	94	74-121
06/04/92	DA*ALS2B*86	97031*SUR	1,2-DICHLOROETHANE-D(4)	UG/KG-DRY	50	48	96	70-121
06/04/92	DA*ALS2B*86	97026*SUR	TOLUENE-D(8)	UG/KG-DRY	50	54	110	81-117
06/04/92	DA*ALS2B*86	97027*SUR	BROMOFLUOROBENZENE	UG/KG-DRY	50	51	100	74-121
06/04/92	DA*ALS2B*85	97031*SUR	1,2-DICHLOROETHANE-D(4)	UG/KG-DRY	50	49	98	70-121
06/04/92	DA*ALS2B*85	97026*SUR	TOLUENE-D(8)	UG/KG-DRY	50	53	110	81-117
06/04/92	DA*ALS2B*85	97027*SUR	BROMOFLUOROBENZENE	UG/KG-DRY	50	52	100	74-121
06/04/92	SP1*QC*1	97031*SUR	1,2-DICHLOROETHANE-D(4)	UG/KG-DRY	50	49	98	70-121
06/04/92	SP1*QC*1	97026*SUR	TOLUENE-D(8)	UG/KG-DRY	50	53	110	81-117
06/04/92	SP1*QC*1	97027*SUR	BROMOFLUOROBENZENE	UG/KG-DRY	50	51	100	74-121
06/05/92	DA*ALS2B*30	97031*SUR	1,2-DICHLOROETHANE-D(4)	UG/KG-DRY	50	53	110	70-121
06/05/92	DA*ALS2B*30	97026*SUR	TOLUENE-D(8)	UG/KG-DRY	50	55	110	81-117
06/05/92	DA*ALS2B*30	97027*SUR	BROMOFLUOROBENZENE	UG/KG-DRY	50	57	110	74-121
06/05/92	DA*ALS2B*29	97031*SUR	1,2-DICHLOROETHANE-D(4)	UG/KG-DRY	50	51	100	70-121
06/05/92	DA*ALS2B*29	97026*SUR	TOLUENE-D(8)	UG/KG-DRY	50	53	110	81-117
06/05/92	DA*ALS2B*29	97027*SUR	BROMOFLUOROBENZENE	UG/KG-DRY	50	54	110	74-121
06/05/92	DA*ALS2B*28	97031*SUR	1,2-DICHLOROETHANE-D(4)	UG/KG-DRY	50	51	100	70-121
06/05/92	DA*ALS2B*28	97026*SUR	TOLUENE-D(8)	UG/KG-DRY	50	53	110	81-117
06/05/92	DA*ALS2B*28	97027*SUR	BROMOFLUOROBENZENE	UG/KG-DRY	50	54	110	74-121
06/05/92	DA*ALS2B*84	97031*SUR	1,2-DICHLOROETHANE-D(4)	UG/KG-DRY	50	51	100	70-121
06/05/92	DA*ALS2B*84	97026*SUR	TOLUENE-D(8)	UG/KG-DRY	50	51	100	81-117
06/05/92	DA*ALS2B*84	97027*SUR	BROMOFLUOROBENZENE	UG/KG-DRY	50	53	110	74-121
06/05/92	DA*ALS2B*80	97031*SUR	1,2-DICHLOROETHANE-D(4)	UG/KG-DRY	50	48	96	70-121
06/05/92	DA*ALS2B*80	97026*SUR	TOLUENE-D(8)	UG/KG-DRY	50	50	100	81-117
06/05/92	DA*ALS2B*80	97027*SUR	BROMOFLUOROBENZENE	UG/KG-DRY	50	52	100	74-121
06/05/92	DA*ALS2B*79	97031*SUR	1,2-DICHLOROETHANE-D(4)	UG/KG-DRY	50	53	110	70-121
06/05/92	DA*ALS2B*79	97026*SUR	TOLUENE-D(8)	UG/KG-DRY	50	56	110	81-117
06/05/92	DA*ALS2B*79	97027*SUR	BROMOFLUOROBENZENE	UG/KG-DRY	50	53	110	74-121
06/05/92	DA*ALS2B*78	97031*SUR	1,2-DICHLOROETHANE-D(4)	UG/KG-DRY	50	53	110	70-121
06/05/92	DA*ALS2B*78	97026*SUR	TOLUENE-D(8)	UG/KG-DRY	50	52	100	81-117
06/05/92	DA*ALS2B*78	97027*SUR	BROMOFLUOROBENZENE	UG/KG-DRY	50	54	110	74-121
06/05/92	DA*ALS2B*76	97031*SUR	1,2-DICHLOROETHANE-D(4)	UG/KG-DRY	50	49	98	70-121
06/05/92	DA*ALS2B*76	97026*SUR	TOLUENE-D(8)	UG/KG-DRY	50	50	100	81-117
06/05/92	DA*ALS2B*76	97027*SUR	BROMOFLUOROBENZENE	UG/KG-DRY	50	49	98	74-121
06/05/92	DA*ALS2B*74	97031*SUR	1,2-DICHLOROETHANE-D(4)	UG/KG-DRY	50	52	100	70-121
06/05/92	DA*ALS2B*74	97026*SUR	TOLUENE-D(8)	UG/KG-DRY	50	52	100	81-117
06/05/92	DA*ALS2B*74	97027*SUR	BROMOFLUOROBENZENE	UG/KG-DRY	50	53	110	74-121
06/05/92	DA*ALS2B*34	97031*SUR	1,2-DICHLOROETHANE-D(4)	UG/KG-DRY	50	52	100	70-121
06/05/92	DA*ALS2B*34	97026*SUR	TOLUENE-D(8)	UG/KG-DRY	50	56	110	81-117
06/05/92	DA*ALS2B*34	97027*SUR	BROMOFLUOROBENZENE	UG/KG-DRY	50	49	98	74-121

ESE BATCH : G28646

Environmental Science and Engineering Analytical Services
Computer QC Checks

Batch No.: G28646 Analysis Date: 06/04/92 Analyst: GREGORY LAMB

	Yes	"Exceptions" No	Comment / Corrective Action
Analysis holding time within criteria?	X		
Extract holding time within criteria?	X		
Method blank present?	X		
Method blank within acceptance criteria?	X		
Sample matrix spike present?	X		
Sample matrix spike within acceptance criteria?	X		
Sample matrix spike duplicate present?	X		
Sample matrix spike duplicate within acceptance criteria?	X		
Surrogate present?	X		
Surrogate within acceptance criteria?	X		

Note: Any "NO" answer requires a comment.

ESE BATCH : G28736
CLASSIFICATION : VOLATILE ORGANIC CMPDS - CLP SOW 2/88

STATUS : FINAL

METHOD BLANK CORRECTION METHOD : NONE

FIELD GRP	PROJECT NUMBER	PROJECT NAME	LAB COORDINATOR
ALS2B	3914042 0201	JMM/ALAMEDA CTO-121	JACKIE HARGROVE-ELLI

SAMPLE CODE	CLIENT ID	DATE ANALYZED	TIME ANALYZED
ALS2B*39	M-BG4	06/10/92	05:28PM
ALS2B*68	05PS-DUP1	06/10/92	06:10PM
ALS2B*54	B-05PS-05	06/10/92	08:17PM
ALS2B*53	B-05PS-04	06/10/92	08:59PM
ALS2B*50	B-05PS-03	06/10/92	09:41PM
ALS2B*48	B-05PS-02	06/10/92	10:24PM
ALS2B*55	B-05PS-05	06/10/92	11:06PM
ALS2B*52	B-05PS-04	06/10/92	11:48PM
ALS2B*51	B-05PS-03	06/11/92	12:30AM
ALS2B*49	B-05PS-02	06/11/92	01:13AM
ALS2B*71	B-05WT-01	06/11/92	05:56PM
ALS2B*46	B-05PS-01	06/11/92	07:27PM
ALS2B*72	B-05WT-02	06/11/92	09:35PM

ESE BATCH : G28736

Method Blank Sample Summary

DATE	SAMPLE	STORET	PARAMETER	UNITS	FOUND
06/10/92	MB*QC*0610	34421*CLP1	CHLOROMETHANE	UG/KG-DRY	ND
06/10/92	MB*QC*0610	34416*CLP1	BROMOMETHANE	UG/KG-DRY	ND
06/10/92	MB*QC*0610	34495*CLP1	VINYL CHLORIDE	UG/KG-DRY	ND
06/10/92	MB*QC*0610	34314*CLP1	CHLOROETHANE	UG/KG-DRY	ND
06/10/92	MB*QC*0610	34426*CLP1	METHYLENE CHLORIDE	UG/KG-DRY	ND
06/10/92	MB*QC*0610	75059*CLP1	ACETONE	UG/KG-DRY	19
06/10/92	MB*QC*0610	78544*CLP1	CARBON DISULFIDE	UG/KG-DRY	ND
06/10/92	MB*QC*0610	34504*CLP1	1,1-DICHLOROETHYLENE	UG/KG-DRY	ND
06/10/92	MB*QC*0610	34499*CLP1	1,1-DICHLOROETHANE	UG/KG-DRY	ND
06/10/92	MB*QC*0610	96464*CLP1	1,2-DICHLOROETHENE(TOTAL)	UG/KG	ND
06/10/92	MB*QC*0610	34318*CLP1	CHLOROFORM	UG/KG-DRY	ND
06/10/92	MB*QC*0610	34534*CLP1	1,2-DICHLOROETHANE	UG/KG-DRY	ND
06/10/92	MB*QC*0610	75078*CLP1	METHYL ETHYL KETONE	UG/KG-DRY	ND
06/10/92	MB*QC*0610	34509*CLP1	1,1,1-TRICHL'ETHANE	UG/KG-DRY	ND
06/10/92	MB*QC*0610	34299*CLP1	CARBON TETRACHLORIDE	UG/KG-DRY	ND
06/10/92	MB*QC*0610	98583*CLP1	VINYL ACETATE	UG/KG-DRY	ND
06/10/92	MB*QC*0610	34330*CLP1	BROMODICHLOROMETHANE	UG/KG-DRY	ND
06/10/92	MB*QC*0610	34544*CLP1	1,2-DICHLOROPROPANE	UG/KG-DRY	ND
06/10/92	MB*QC*0610	34702*CLP1	CIS-1,3-DICHLORO PROPENE	UG/KG-DRY	ND
06/10/92	MB*QC*0610	34487*CLP1	TRICHLOROETHENE	UG/KG-DRY	ND
06/10/92	MB*QC*0610	34309*CLP1	DIBROMOCHLOROMETHANE	UG/KG-DRY	ND
06/10/92	MB*QC*0610	34237*CLP1	BENZENE	UG/KG-DRY	ND
06/10/92	MB*QC*0610	34514*CLP1	1,1,2-TRICHL'ETHANE	UG/KG-DRY	ND
06/10/92	MB*QC*0610	34697*CLP1	TRANS-1,3-DICHLORO PROPENE	UG/KG-DRY	ND
06/10/92	MB*QC*0610	34290*CLP1	BROMOFORM	UG/KG-DRY	ND
06/10/92	MB*QC*0610	75166*CLP1	2-HEXANONE	UG/KG-DRY	ND
06/10/92	MB*QC*0610	75169*CLP1	METHYL ISOBUT'KETONE	UG/KG-DRY	ND
06/10/92	MB*QC*0610	34478*CLP1	TETRACHLOROETHENE	UG/KG-DRY	ND
06/10/92	MB*QC*0610	34519*CLP1	1,1,2,2-TETRACHLORO ETHANE	UG/KG-DRY	ND
06/10/92	MB*QC*0610	34483*CLP1	TOLUENE	UG/KG-DRY	ND
06/10/92	MB*QC*0610	34304*CLP1	CHLOROBENZENE	UG/KG-DRY	ND
06/10/92	MB*QC*0610	34374*CLP1	ETHYLBENZENE	UG/KG-DRY	ND
06/10/92	MB*QC*0610	45510*CLP1	XYLENE,SED	UG/KG-DRY	ND
06/10/92	MB*QC*0610	75192*CLP1	STYRENE	UG/KG-DRY	ND

Standard Matrix Spike Recovery Summary

TE	SAMPLE	STORET	PARAMETER	%RECV	RECV CRIT	UNITS	TARGET	FOUND
10/92	SP1*QC*1	34504*CLP1	1,1-DICHLOROETHYLENE	78	59-172	UG/KG-DRY	50	39
10/92	SP1*QC*1	34487*CLP1	TRICHLOROETHENE	96	62-137	UG/KG-DRY	50	48
06/10/92	SP1*QC*1	34237*CLP1	BENZENE	90	66-142	UG/KG-DRY	50	45
06/10/92	SP1*QC*1	34483*CLP1	TOLUENE	98	59-139	UG/KG-DRY	50	49
06/10/92	SP1*QC*1	34304*CLP1	CHLOROBENZENE	98	60-133	UG/KG-DRY	50	49

Sample Matrix Spike Recovery Summary

DATE	SAMPLE	STORET	PARAMETER	%RECV	RECV CRIT	UNSPIKED	UNITS	TARGET	FOUND	RPD
06/10/92	SPM1*ALS2B*68	34504*CLP1	1,1-DICHLOROETHYLENE	77	59-172	0.0	UG/KG-DRY	61	47	
06/10/92	SPM1*ALS2B*68	34487*CLP1	TRICHLOROETHENE	98	62-137	0.0	UG/KG-DRY	61	60	
06/10/92	SPM1*ALS2B*68	34237*CLP1	BENZENE	95	66-142	0.0	UG/KG-DRY	61	58	
06/10/92	SPM1*ALS2B*68	34483*CLP1	TOLUENE	97	59-139	0.0	UG/KG-DRY	61	59	
06/10/92	SPM1*ALS2B*68	34304*CLP1	CHLOROBENZENE	100	60-133	0.0	UG/KG-DRY	61	61	
06/10/92	SPM2*ALS2B*68	34504*CLP1	1,1-DICHLOROETHYLENE	74	59-172	0.0	UG/KG-DRY	61	45	4.0
06/10/92	SPM2*ALS2B*68	34487*CLP1	TRICHLOROETHENE	98	62-137	0.0	UG/KG-DRY	61	60	0.0
06/10/92	SPM2*ALS2B*68	34237*CLP1	BENZENE	92	66-142	0.0	UG/KG-DRY	61	56	3.2
06/10/92	SPM2*ALS2B*68	34483*CLP1	TOLUENE	97	59-139	0.0	UG/KG-DRY	61	59	0.0
06/10/92	SPM2*ALS2B*68	34304*CLP1	CHLOROBENZENE	100	60-133	0.0	UG/KG-DRY	61	61	0.0

Surrogate Spike Recovery Summary

DATE	SAMPLE	STORET	PARAMETER	UNITS	TARGET	FOUND	%RECV	RECV CRIT
06/10/92	MB*QC*0610	97031*SUR	1,2-DICHLOROETHANE-D(4)	UG/KG-DRY	50	48	96	70-121
06/10/92	MB*QC*0610	97026*SUR	TOLUENE-D(8)	UG/KG-DRY	50	50	100	81-117
06/10/92	MB*QC*0610	97027*SUR	BROMOFLUOROBENZENE	UG/KG-DRY	50	51	100	74-121
06/10/92	DA*ALS2B*39	97031*SUR	1,2-DICHLOROETHANE-D(4)	UG/KG-DRY	50	50	100	70-121
06/10/92	DA*ALS2B*39	97026*SUR	TOLUENE-D(8)	UG/KG-DRY	50	52	100	81-117
06/10/92	DA*ALS2B*39	97027*SUR	BROMOFLUOROBENZENE	UG/KG-DRY	50	51	100	74-121
06/10/92	DA*ALS2B*68	97031*SUR	1,2-DICHLOROETHANE-D(4)	UG/KG-DRY	50	50	100	70-121
06/10/92	DA*ALS2B*68	97026*SUR	TOLUENE-D(8)	UG/KG-DRY	50	50	100	81-117
06/10/92	DA*ALS2B*68	97027*SUR	BROMOFLUOROBENZENE	UG/KG-DRY	50	50	100	74-121
06/10/92	SPM1*ALS2B*68	97031*SUR	1,2-DICHLOROETHANE-D(4)	UG/KG-DRY	50	52	100	70-121
06/10/92	SPM1*ALS2B*68	97026*SUR	TOLUENE-D(8)	UG/KG-DRY	50	50	100	81-117
06/10/92	SPM1*ALS2B*68	97027*SUR	BROMOFLUOROBENZENE	UG/KG-DRY	50	51	100	74-121
06/10/92	SPM2*ALS2B*68	97031*SUR	1,2-DICHLOROETHANE-D(4)	UG/KG-DRY	50	50	100	70-121
06/10/92	SPM2*ALS2B*68	97026*SUR	TOLUENE-D(8)	UG/KG-DRY	50	50	100	81-117
06/10/92	SPM2*ALS2B*68	97027*SUR	BROMOFLUOROBENZENE	UG/KG-DRY	50	52	100	74-121
06/10/92	DA*ALS2B*54	97031*SUR	1,2-DICHLOROETHANE-D(4)	UG/KG-DRY	50	50	100	70-121

CSC BATCH : 628736

Surrogate Spike Recovery Summary

DATE	SAMPLE	STORET	PARAMETER	UNITS	TARGET	FOUND	%RECV	RECV CRIT
06/10/92	DA*ALS2B*54	97026*SUR	TOLUENE-D(8)	UG/KG-DRY	50	49	98	81-117
06/10/92	DA*ALS2B*54	97027*SUR	BROMOFLUOROBENZENE	UG/KG-DRY	50	50	100	74-121
06/10/92	DA*ALS2B*53	97031*SUR	1,2-DICHLOROETHANE-D(4)	UG/KG-DRY	50	51	100	70-121
06/10/92	DA*ALS2B*53	97026*SUR	TOLUENE-D(8)	UG/KG-DRY	50	50	100	81-117
06/10/92	DA*ALS2B*53	97027*SUR	BROMOFLUOROBENZENE	UG/KG-DRY	50	52	100	74-121
06/10/92	DA*ALS2B*50	97031*SUR	1,2-DICHLOROETHANE-D(4)	UG/KG-DRY	50	48	96	70-121
06/10/92	DA*ALS2B*50	97026*SUR	TOLUENE-D(8)	UG/KG-DRY	50	47	94	81-117
06/10/92	DA*ALS2B*50	97027*SUR	BROMOFLUOROBENZENE	UG/KG-DRY	50	51	100	74-121
06/10/92	DA*ALS2B*48	97031*SUR	1,2-DICHLOROETHANE-D(4)	UG/KG-DRY	50	51	100	70-121
06/10/92	DA*ALS2B*48	97026*SUR	TOLUENE-D(8)	UG/KG-DRY	50	50	100	81-117
06/10/92	DA*ALS2B*48	97027*SUR	BROMOFLUOROBENZENE	UG/KG-DRY	50	53	110	74-121
06/10/92	DA*ALS2B*55	97031*SUR	1,2-DICHLOROETHANE-D(4)	UG/KG-DRY	50	50	100	70-121
06/10/92	DA*ALS2B*55	97026*SUR	TOLUENE-D(8)	UG/KG-DRY	50	49	98	81-117
06/10/92	DA*ALS2B*55	97027*SUR	BROMOFLUOROBENZENE	UG/KG-DRY	50	52	100	74-121
06/10/92	DA*ALS2B*52	97031*SUR	1,2-DICHLOROETHANE-D(4)	UG/KG-DRY	50	49	98	70-121
06/10/92	DA*ALS2B*52	97026*SUR	TOLUENE-D(8)	UG/KG-DRY	50	48	96	81-117
06/10/92	DA*ALS2B*52	97027*SUR	BROMOFLUOROBENZENE	UG/KG-DRY	50	51	100	74-121
06/11/92	DA*ALS2B*51	97031*SUR	1,2-DICHLOROETHANE-D(4)	UG/KG-DRY	50	50	100	70-121
06/11/92	DA*ALS2B*51	97026*SUR	TOLUENE-D(8)	UG/KG-DRY	50	48	96	81-117
06/11/92	DA*ALS2B*51	97027*SUR	BROMOFLUOROBENZENE	UG/KG-DRY	50	51	100	74-121
06/11/92	DA*ALS2B*49	97031*SUR	1,2-DICHLOROETHANE-D(4)	UG/KG-DRY	50	52	100	70-121
06/11/92	DA*ALS2B*49	97026*SUR	TOLUENE-D(8)	UG/KG-DRY	50	49	98	81-117
06/11/92	DA*ALS2B*49	97027*SUR	BROMOFLUOROBENZENE	UG/KG-DRY	50	54	110	74-121
06/11/92	SP1*QC*1	97031*SUR	1,2-DICHLOROETHANE-D(4)	UG/KG-DRY	50	50	100	70-121
06/11/92	SP1*QC*1	97026*SUR	TOLUENE-D(8)	UG/KG-DRY	50	48	96	81-117
06/11/92	SP1*QC*1	97027*SUR	BROMOFLUOROBENZENE	UG/KG-DRY	50	50	100	74-121
06/11/92	DA*ALS2B*71	97031*SUR	1,2-DICHLOROETHANE-D(4)	UG/KG-DRY	50	44	88	70-121
06/11/92	DA*ALS2B*71	97026*SUR	TOLUENE-D(8)	UG/KG-DRY	50	44	88	81-117
06/11/92	DA*ALS2B*71	97027*SUR	BROMOFLUOROBENZENE	UG/KG-DRY	50	44	88	74-121
06/11/92	DA*ALS2B*46	97031*SUR	1,2-DICHLOROETHANE-D(4)	UG/KG-DRY	50	42	84	70-121
06/11/92	DA*ALS2B*46	97026*SUR	TOLUENE-D(8)	UG/KG-DRY	50	41	82	81-117
06/11/92	DA*ALS2B*46	97027*SUR	BROMOFLUOROBENZENE	UG/KG-DRY	50	41	82	74-121
06/11/92	DA*ALS2B*72	97031*SUR	1,2-DICHLOROETHANE-D(4)	UG/KG-DRY	50	46	92	70-121
06/11/92	DA*ALS2B*72	97026*SUR	TOLUENE-D(8)	UG/KG-DRY	50	45	90	81-117
06/11/92	DA*ALS2B*72	97027*SUR	BROMOFLUOROBENZENE	UG/KG-DRY	50	46	92	74-121

EST BATCH : G28736

Environmental Science and Engineering Analytical Services

Computer QC Checks

Batch No.: G28736 Analysis Date: 06/10/92 Analyst: W WHITEHILL

	Yes	"Exceptions" No	Comment / Corrective Action
Analysis holding time within criteria?	X		
Extract holding time within criteria?	X		
Method blank present?	X		
Method blank within acceptance criteria?	X		
Sample matrix spike present?	X		
Sample matrix spike within acceptance criteria?	X		
Sample matrix spike duplicate present?	X		
Sample matrix spike duplicate within acceptance criteria?	X		
Surrogate present?	X		
Surrogate within acceptance criteria?	X		

Note: Any "NO" answer requires a comment.

ESE BATCH : G28753
CLASSIFICATION : VOLATILE ORGANIC CMPDS - CLP SOW 2/88

STATUS : FINAL

METHOD BLANK CORRECTION METHOD : NONE

FIELD GRP	PROJECT NUMBER	PROJECT NAME	LAB COORDINATOR
ALS2B	3914042 0201	JMM/ALAMEDA CTO-121	JACKIE HARGROVE-ELLI

SAMPLE CODE	CLIENT ID	DATE ANALYZED	TIME ANALYZED
ALS2B*81	05HW-DUP1	06/05/92	04:51PM
ALS2B*75	B-05HW-02	06/05/92	06:57PM
ALS2B*73	B-05HW-02	06/05/92	07:39PM
ALS2B*33	M-BG2	06/05/92	08:21PM
ALS2B*32	M-BG2	06/05/92	09:04PM
ALS2B*31	M-BG2	06/05/92	09:46PM
ALS2B*42	M-BG4	06/05/92	10:28PM
ALS2B*41	M-BG4	06/05/92	11:11PM
ALS2B*40	M-BG4	06/05/92	11:53PM
ALS2B*35	M-BG3	06/06/92	11:33AM
ALS2B*36	M-BG3	06/06/92	12:13PM
ALS2B*37	M-BG3	06/06/92	12:52PM
ALS2B*38	M-BG3	06/06/92	01:32PM
ALS2B*70	B-05SP-01	06/06/92	05:02PM

ESE BATCH : G28753

Method Blank Sample Summary

DATE	SAMPLE	STORET	PARAMETER	UNITS	FOUND
06/05/92	MB*QC*0605	34421*CLP1	CHLOROMETHANE	UG/KG-DRY	ND
06/05/92	MB*QC*0605	34416*CLP1	BROMOMETHANE	UG/KG-DRY	ND
/05/92	MB*QC*0605	34495*CLP1	VINYL CHLORIDE	UG/KG-DRY	ND
/05/92	MB*QC*0605	34314*CLP1	CHLOROETHANE	UG/KG-DRY	ND
06/05/92	MB*QC*0605	34426*CLP1	METHYLENE CHLORIDE	UG/KG-DRY	ND
06/05/92	MB*QC*0605	75059*CLP1	ACETONE	UG/KG-DRY	15
06/05/92	MB*QC*0605	78544*CLP1	CARBON DISULFIDE	UG/KG-DRY	ND
06/05/92	MB*QC*0605	34504*CLP1	1,1-DICHLOROETHYLENE	UG/KG-DRY	ND
06/05/92	MB*QC*0605	34499*CLP1	1,1-DICHLOROETHANE	UG/KG-DRY	ND
06/05/92	MB*QC*0605	96464*CLP1	1,2-DICHLOROETHENE(TOTAL)	UG/KG	ND
06/05/92	MB*QC*0605	34318*CLP1	CHLOROFORM	UG/KG-DRY	ND
06/05/92	MB*QC*0605	34534*CLP1	1,2-DICHLOROETHANE	UG/KG-DRY	ND
06/05/92	MB*QC*0605	75078*CLP1	METHYL ETHYL KETONE	UG/KG-DRY	ND
06/05/92	MB*QC*0605	34509*CLP1	1,1,1-TRICHL'ETHANE	UG/KG-DRY	ND
06/05/92	MB*QC*0605	34299*CLP1	CARBON TETRACHLORIDE	UG/KG-DRY	ND
06/05/92	MB*QC*0605	98583*CLP1	VINYL ACETATE	UG/KG-DRY	ND
06/05/92	MB*QC*0605	34330*CLP1	BROMODICHLOROMETHANE	UG/KG-DRY	ND
06/05/92	MB*QC*0605	34544*CLP1	1,2-DICHLOROPROPANE	UG/KG-DRY	ND
06/05/92	MB*QC*0605	34702*CLP1	CIS-1,3-DICHLORO PROPENE	UG/KG-DRY	ND
06/05/92	MB*QC*0605	34487*CLP1	TRICHLOROETHENE	UG/KG-DRY	ND
06/05/92	MB*QC*0605	34309*CLP1	DIBROMOCHLOROMETHANE	UG/KG-DRY	ND
06/05/92	MB*QC*0605	34237*CLP1	BENZENE	UG/KG-DRY	ND
06/05/92	MB*QC*0605	34514*CLP1	1,1,2-TRICHL'ETHANE	UG/KG-DRY	ND
06/05/92	MB*QC*0605	34697*CLP1	TRANS-1,3-DICHLORO PROPENE	UG/KG-DRY	ND
06/05/92	MB*QC*0605	34290*CLP1	BROMOFORM	UG/KG-DRY	ND
06/05/92	MB*QC*0605	75166*CLP1	2-HEXANONE	UG/KG-DRY	ND
06/05/92	MB*QC*0605	75169*CLP1	METHYL ISOBUT'KETONE	UG/KG-DRY	ND
06/05/92	MB*QC*0605	34478*CLP1	TETRACHLOROETHENE	UG/KG-DRY	ND
06/05/92	MB*QC*0605	34519*CLP1	1,1,2,2-TETRACHLORO ETHANE	UG/KG-DRY	ND
06/05/92	MB*QC*0605	34483*CLP1	TOLUENE	UG/KG-DRY	ND
06/05/92	MB*QC*0605	34304*CLP1	CHLOROBENZENE	UG/KG-DRY	ND
06/05/92	MB*QC*0605	34374*CLP1	ETHYLBENZENE	UG/KG-DRY	ND
06/05/92	MB*QC*0605	45510*CLP1	XYLENE,SED	UG/KG-DRY	ND
06/05/92	MB*QC*0605	75192*CLP1	STYRENE	UG/KG-DRY	ND
06/05/92	MB*QC*0606	34421*CLP1	CHLOROMETHANE	UG/KG-DRY	ND
06/05/92	MB*QC*0606	34416*CLP1	BROMOMETHANE	UG/KG-DRY	ND
06/05/92	MB*QC*0606	34495*CLP1	VINYL CHLORIDE	UG/KG-DRY	ND
/05/92	MB*QC*0606	34314*CLP1	CHLOROETHANE	UG/KG-DRY	ND
05/92	MB*QC*0606	34426*CLP1	METHYLENE CHLORIDE	UG/KG-DRY	ND
/05/92	MB*QC*0606	75059*CLP1	ACETONE	UG/KG-DRY	6.8
06/05/92	MB*QC*0606	78544*CLP1	CARBON DISULFIDE	UG/KG-DRY	ND
06/05/92	MB*QC*0606	34504*CLP1	1,1-DICHLOROETHYLENE	UG/KG-DRY	ND
06/05/92	MB*QC*0606	34499*CLP1	1,1-DICHLOROETHANE	UG/KG-DRY	ND
06/05/92	MB*QC*0606	96464*CLP1	1,2-DICHLOROETHENE(TOTAL)	UG/KG	ND
06/05/92	MB*QC*0606	34318*CLP1	CHLOROFORM	UG/KG-DRY	ND
06/05/92	MB*QC*0606	34534*CLP1	1,2-DICHLOROETHANE	UG/KG-DRY	ND
06/05/92	MB*QC*0606	75078*CLP1	METHYL ETHYL KETONE	UG/KG-DRY	ND
06/05/92	MB*QC*0606	34509*CLP1	1,1,1-TRICHL'ETHANE	UG/KG-DRY	ND
06/05/92	MB*QC*0606	34299*CLP1	CARBON TETRACHLORIDE	UG/KG-DRY	ND
06/05/92	MB*QC*0606	98583*CLP1	VINYL ACETATE	UG/KG-DRY	ND
06/05/92	MB*QC*0606	34330*CLP1	BROMODICHLOROMETHANE	UG/KG-DRY	ND
06/05/92	MB*QC*0606	34544*CLP1	1,2-DICHLOROPROPANE	UG/KG-DRY	ND
06/05/92	MB*QC*0606	34702*CLP1	CIS-1,3-DICHLORO PROPENE	UG/KG-DRY	ND
06/05/92	MB*QC*0606	34487*CLP1	TRICHLOROETHENE	UG/KG-DRY	ND
06/05/92	MB*QC*0606	34309*CLP1	DIBROMOCHLOROMETHANE	UG/KG-DRY	ND
06/05/92	MB*QC*0606	34237*CLP1	BENZENE	UG/KG-DRY	ND
06/05/92	MB*QC*0606	34514*CLP1	1,1,2-TRICHL'ETHANE	UG/KG-DRY	ND
06/05/92	MB*QC*0606	34697*CLP1	TRANS-1,3-DICHLORO PROPENE	UG/KG-DRY	ND
06/05/92	MB*QC*0606	34290*CLP1	BROMOFORM	UG/KG-DRY	ND
06/05/92	MB*QC*0606	75166*CLP1	2-HEXANONE	UG/KG-DRY	ND
06/05/92	MB*QC*0606	75169*CLP1	METHYL ISOBUT'KETONE	UG/KG-DRY	ND
06/05/92	MB*QC*0606	34478*CLP1	TETRACHLOROETHENE	UG/KG-DRY	ND
06/05/92	MB*QC*0606	34519*CLP1	1,1,2,2-TETRACHLORO ETHANE	UG/KG-DRY	ND
06/05/92	MB*QC*0606	34483*CLP1	TOLUENE	UG/KG-DRY	ND
06/05/92	MB*QC*0606	34304*CLP1	CHLOROBENZENE	UG/KG-DRY	ND
06/05/92	MB*QC*0606	34374*CLP1	ETHYLBENZENE	UG/KG-DRY	ND
06/05/92	MB*QC*0606	45510*CLP1	XYLENE,SED	UG/KG-DRY	ND
06/05/92	MB*QC*0606	75192*CLP1	STYRENE	UG/KG-DRY	ND

Sample Matrix Spike Recovery Summary

DATE	SAMPLE	STORET	PARAMETER	%RECV	RECV CRIT	UNSPIKED	UNITS	TARGET	FOUND	RPD
/05/92	SPM1*ALS2B*81	34504*CLP1	1,1-DICHLOROETHYLENE	87	59-172	0.0	UG/KG-DRY	61	53	
05/92	SPM1*ALS2B*81	34487*CLP1	TRICHLOROETHENE	103	62-137	0.0	UG/KG-DRY	61	63	
/05/92	SPM1*ALS2B*81	34237*CLP1	BENZENE	100	66-142	0.0	UG/KG-DRY	61	61	
06/05/92	SPM1*ALS2B*81	34483*CLP1	TOLUENE	103	59-139	0.0	UG/KG-DRY	61	63	
06/05/92	SPM1*ALS2B*81	34304*CLP1	CHLOROBENZENE	105	60-133	0.0	UG/KG-DRY	61	64	

ESE BATCH : G28753

Sample Matrix Spike Recovery Summary

DATE	SAMPLE	STORET	PARAMETER	%RECV	RECV CRIT	UNSPIKED	UNITS	TARGET	FOUND	RPD
06/05/92	SPM2*ALS2B*81	34504*CLP1	1,1-DICHLOROETHYLENE	80	59-172	0.0	UG/KG-DRY	61	49	7.1
06/05/92	SPM2*ALS2B*81	34487*CLP1	TRICHLOROETHENE	102	62-137	0.0	UG/KG-DRY	61	62	0.0
06/05/92	SPM2*ALS2B*81	34237*CLP1	BENZENE	93	66-142	0.0	UG/KG-DRY	61	57	6.2
06/05/92	SPM2*ALS2B*81	34483*CLP1	TOLUENE	100	59-139	0.0	UG/KG-DRY	61	61	0.0
06/05/92	SPM2*ALS2B*81	34304*CLP1	CHLOROBENZENE	100	60-133	0.0	UG/KG-DRY	61	61	0

Surrogate Spike Recovery Summary

DATE	SAMPLE	STORET	PARAMETER	UNITS	TARGET	FOUND	%RECV	RECV CRIT
06/05/92	MB*QC*0605	97031*SUR	1,2-DICHLOROETHANE-D(4)	UG/KG-DRY	50	50	100	70-121
06/05/92	MB*QC*0605	97026*SUR	TOLUENE-D(8)	UG/KG-DRY	50	49	98	81-117
06/05/92	MB*QC*0605	97027*SUR	BROMOFLUOROBENZENE	UG/KG-DRY	50	52	100	74-121
06/05/92	DA*ALS2B*81	97031*SUR	1,2-DICHLOROETHANE-D(4)	UG/KG-DRY	50	49	98	70-121
06/05/92	DA*ALS2B*81	97026*SUR	TOLUENE-D(8)	UG/KG-DRY	50	48	96	81-117
06/05/92	DA*ALS2B*81	97027*SUR	BROMOFLUOROBENZENE	UG/KG-DRY	50	50	100	74-121
06/05/92	SPM1*ALS2B*81	97031*SUR	1,2-DICHLOROETHANE-D(4)	UG/KG-DRY	50	50	100	70-121
06/05/92	SPM1*ALS2B*81	97026*SUR	TOLUENE-D(8)	UG/KG-DRY	50	50	100	81-117
06/05/92	SPM1*ALS2B*81	97027*SUR	BROMOFLUOROBENZENE	UG/KG-DRY	50	51	100	74-121
06/05/92	SPM2*ALS2B*81	97031*SUR	1,2-DICHLOROETHANE-D(4)	UG/KG-DRY	50	50	100	70-121
06/05/92	SPM2*ALS2B*81	97026*SUR	TOLUENE-D(8)	UG/KG-DRY	50	49	98	81-117
06/05/92	SPM2*ALS2B*81	97027*SUR	BROMOFLUOROBENZENE	UG/KG-DRY	50	49	98	74-121
06/05/92	DA*ALS2B*75	97031*SUR	1,2-DICHLOROETHANE-D(4)	UG/KG-DRY	50	51	100	70-121
06/05/92	DA*ALS2B*75	97026*SUR	TOLUENE-D(8)	UG/KG-DRY	50	49	98	81-117
06/05/92	DA*ALS2B*75	97027*SUR	BROMOFLUOROBENZENE	UG/KG-DRY	50	51	100	74-121
06/05/92	DA*ALS2B*73	97031*SUR	1,2-DICHLOROETHANE-D(4)	UG/KG-DRY	50	53	110	70-121
06/05/92	DA*ALS2B*73	97026*SUR	TOLUENE-D(8)	UG/KG-DRY	50	54	110	81-117
06/05/92	DA*ALS2B*73	97027*SUR	BROMOFLUOROBENZENE	UG/KG-DRY	50	49	98	74-121
06/05/92	DA*ALS2B*33	97031*SUR	1,2-DICHLOROETHANE-D(4)	UG/KG-DRY	50	49	98	70-121
06/05/92	DA*ALS2B*33	97026*SUR	TOLUENE-D(8)	UG/KG-DRY	50	48	96	81-117
06/05/92	DA*ALS2B*33	97027*SUR	BROMOFLUOROBENZENE	UG/KG-DRY	50	47	94	74-121
06/05/92	DA*ALS2B*32	97031*SUR	1,2-DICHLOROETHANE-D(4)	UG/KG-DRY	50	51	100	70-121
06/05/92	DA*ALS2B*32	97026*SUR	TOLUENE-D(8)	UG/KG-DRY	50	50	100	81-117
06/05/92	DA*ALS2B*32	97027*SUR	BROMOFLUOROBENZENE	UG/KG-DRY	50	50	100	74-121
06/05/92	DA*ALS2B*31	97031*SUR	1,2-DICHLOROETHANE-D(4)	UG/KG-DRY	50	51	100	70-121
06/05/92	DA*ALS2B*31	97026*SUR	TOLUENE-D(8)	UG/KG-DRY	50	56	110	81-117
06/05/92	DA*ALS2B*31	97027*SUR	BROMOFLUOROBENZENE	UG/KG-DRY	50	41	82	74-121
06/05/92	DA*ALS2B*42	97031*SUR	1,2-DICHLOROETHANE-D(4)	UG/KG-DRY	50	51	100	70-121
06/05/92	DA*ALS2B*42	97026*SUR	TOLUENE-D(8)	UG/KG-DRY	50	50	100	81-117
06/05/92	DA*ALS2B*42	97027*SUR	BROMOFLUOROBENZENE	UG/KG-DRY	50	52	100	74-121
06/05/92	DA*ALS2B*41	97031*SUR	1,2-DICHLOROETHANE-D(4)	UG/KG-DRY	50	48	96	70-121
06/05/92	DA*ALS2B*41	97026*SUR	TOLUENE-D(8)	UG/KG-DRY	50	48	96	81-117
06/05/92	DA*ALS2B*41	97027*SUR	BROMOFLUOROBENZENE	UG/KG-DRY	50	50	100	74-121
06/05/92	DA*ALS2B*40	97031*SUR	1,2-DICHLOROETHANE-D(4)	UG/KG-DRY	50	50	100	70-121
06/05/92	DA*ALS2B*40	97026*SUR	TOLUENE-D(8)	UG/KG-DRY	50	48	96	81-117
06/05/92	DA*ALS2B*40	97027*SUR	BROMOFLUOROBENZENE	UG/KG-DRY	50	51	100	74-121
06/06/92	MB*QC*0606	97031*SUR	1,2-DICHLOROETHANE-D(4)	UG/KG-DRY	50	48	96	70-121
06/06/92	MB*QC*0606	97026*SUR	TOLUENE-D(8)	UG/KG-DRY	50	48	96	81-117
06/06/92	MB*QC*0606	97027*SUR	BROMOFLUOROBENZENE	UG/KG-DRY	50	50	100	74-121
06/06/92	DA*ALS2B*35	97031*SUR	1,2-DICHLOROETHANE-D(4)	UG/KG-DRY	50	51	100	70-121
06/06/92	DA*ALS2B*35	97026*SUR	TOLUENE-D(8)	UG/KG-DRY	50	52	100	81-117
06/06/92	DA*ALS2B*35	97027*SUR	BROMOFLUOROBENZENE	UG/KG-DRY	50	54	110	74-121
06/06/92	DA*ALS2B*36	97031*SUR	1,2-DICHLOROETHANE-D(4)	UG/KG-DRY	50	51	100	70-121
06/06/92	DA*ALS2B*36	97026*SUR	TOLUENE-D(8)	UG/KG-DRY	50	52	100	81-117
06/06/92	DA*ALS2B*36	97027*SUR	BROMOFLUOROBENZENE	UG/KG-DRY	50	50	100	74-121
06/06/92	DA*ALS2B*37	97031*SUR	1,2-DICHLOROETHANE-D(4)	UG/KG-DRY	50	51	100	70-121
06/06/92	DA*ALS2B*37	97026*SUR	TOLUENE-D(8)	UG/KG-DRY	50	50	100	81-117
06/06/92	DA*ALS2B*37	97027*SUR	BROMOFLUOROBENZENE	UG/KG-DRY	50	50	100	74-121
06/06/92	DA*ALS2B*38	97031*SUR	1,2-DICHLOROETHANE-D(4)	UG/KG-DRY	50	51	100	70-121
06/06/92	DA*ALS2B*38	97026*SUR	TOLUENE-D(8)	UG/KG-DRY	50	52	100	81-117
06/06/92	DA*ALS2B*38	97027*SUR	BROMOFLUOROBENZENE	UG/KG-DRY	50	50	100	74-121
06/06/92	DA*ALS2B*70	97031*SUR	1,2-DICHLOROETHANE-D(4)	UG/KG-DRY	50	50	100	70-121
06/06/92	DA*ALS2B*70	97026*SUR	TOLUENE-D(8)	UG/KG-DRY	50	48	96	81-117
06/06/92	DA*ALS2B*70	97027*SUR	BROMOFLUOROBENZENE	UG/KG-DRY	50	54	110	74-121

ESE BATCH : G28753

Environmental Science and Engineering Analytical Services
Computer QC Checks

Batch No.: G28753 Analysis Date: 06/05/92 Analyst: GREGORY LAMB

	Yes	"Exceptions" No	Comment / Corrective Action
Analysis holding time within criteria?	X		
ract holding time within criteria?	X		
Method blank present?	X		
Method blank within acceptance criteria?	X		
Sample matrix spike present?	X		
Sample matrix spike within acceptance criteria?	X		
Sample matrix spike duplicate present?	X		
Sample matrix spike duplicate within acceptance criteria?	X		
Surrogate present?	X		
Surrogate within acceptance criteria?	X		

Note: Any "NO" answer requires a comment.

ESE BATCH : G29044
CLASSIFICATION : VOLATILE ORGANIC CMPDS - CLP SOW 2/88

STATUS : FINAL

METHOD BLANK CORRECTION METHOD : NONE

FIELD GRP	PROJECT NUMBER	PROJECT NAME	LAB COORDINATOR
ALS2B	3914042 0201	JMM/ALAMEDA CTO-121	JACKIE HARGROVE-ELLI

SAMPLE CODE	CLIENT ID	DATE ANALYZED	TIME ANALYZED
ALS2B*82	B-05BS-02	06/18/92	03:41PM
ALS2B*45	B-05PS-01	06/18/92	12:19AM
ALS2B*44	B-05PS-01	06/18/92	01:04AM

ESE BATCH : G29044

Method Blank Sample Summary

DATE	SAMPLE	STORET	PARAMETER	UNITS	FOUND
06/17/92	MB*QC*0617	34421*CLP1	CHLOROMETHANE	UG/KG-DRY	ND
06/17/92	MB*QC*0617	34416*CLP1	BROMOMETHANE	UG/KG-DRY	ND
/17/92	MB*QC*0617	34495*CLP1	VINYL CHLORIDE	UG/KG-DRY	ND
/17/92	MB*QC*0617	34314*CLP1	CHLOROETHANE	UG/KG-DRY	ND
06/17/92	MB*QC*0617	34426*CLP1	METHYLENE CHLORIDE	UG/KG-DRY	6.4
06/17/92	MB*QC*0617	75059*CLP1	ACETONE	UG/KG-DRY	15
06/17/92	MB*QC*0617	78544*CLP1	CARBON DISULFIDE	UG/KG-DRY	ND
06/17/92	MB*QC*0617	34504*CLP1	1,1-DICHLOROETHYLENE	UG/KG-DRY	ND
06/17/92	MB*QC*0617	34499*CLP1	1,1-DICHLOROETHANE	UG/KG-DRY	ND
06/17/92	MB*QC*0617	96464*CLP1	1,2-DICHLOROETHENE(TOTAL)	UG/KG	ND
06/17/92	MB*QC*0617	34318*CLP1	CHLOROFORM	UG/KG-DRY	ND
06/17/92	MB*QC*0617	34534*CLP1	1,2-DICHLOROETHANE	UG/KG-DRY	ND
06/17/92	MB*QC*0617	75078*CLP1	METHYL ETHYL KETONE	UG/KG-DRY	ND
06/17/92	MB*QC*0617	34509*CLP1	1,1,1-TRICHL'ETHANE	UG/KG-DRY	ND
06/17/92	MB*QC*0617	34299*CLP1	CARBON TETRACHLORIDE	UG/KG-DRY	ND
06/17/92	MB*QC*0617	98583*CLP1	VINYL ACETATE	UG/KG-DRY	ND
06/17/92	MB*QC*0617	34330*CLP1	BROMODICHLOROMETHANE	UG/KG-DRY	ND
06/17/92	MB*QC*0617	34544*CLP1	1,2-DICHLOROPROPANE	UG/KG-DRY	ND
06/17/92	MB*QC*0617	34702*CLP1	CIS-1,3-DICHLORO PROPENE	UG/KG-DRY	ND
06/17/92	MB*QC*0617	34487*CLP1	TRICHLOROETHENE	UG/KG-DRY	ND
06/17/92	MB*QC*0617	34309*CLP1	DIBROMOCHLOROMETHANE	UG/KG-DRY	ND
06/17/92	MB*QC*0617	34237*CLP1	BENZENE	UG/KG-DRY	ND
06/17/92	MB*QC*0617	34514*CLP1	1,1,2-TRICHL'ETHANE	UG/KG-DRY	ND
06/17/92	MB*QC*0617	34697*CLP1	TRANS-1,3-DICHLORO PROPENE	UG/KG-DRY	ND
06/17/92	MB*QC*0617	34290*CLP1	BROMOFORM	UG/KG-DRY	ND
06/17/92	MB*QC*0617	75166*CLP1	2-HEXANONE	UG/KG-DRY	ND
06/17/92	MB*QC*0617	75169*CLP1	METHYL ISOBUT'KETONE	UG/KG-DRY	ND
06/17/92	MB*QC*0617	34478*CLP1	TETRACHLOROETHENE	UG/KG-DRY	ND
06/17/92	MB*QC*0617	34519*CLP1	1,1,2,2-TETRACHLORO ETHANE	UG/KG-DRY	ND
06/17/92	MB*QC*0617	34483*CLP1	TOLUENE	UG/KG-DRY	ND
06/17/92	MB*QC*0617	34304*CLP1	CHLOROBENZENE	UG/KG-DRY	ND
06/17/92	MB*QC*0617	34374*CLP1	ETHYLBENZENE	UG/KG-DRY	ND
06/17/92	MB*QC*0617	45510*CLP1	XYLENE,SED	UG/KG-DRY	ND
06/17/92	MB*QC*0617	75192*CLP1	STYRENE	UG/KG-DRY	ND
06/17/92	MB*QC*0618	34421*CLP1	CHLOROMETHANE	UG/KG-DRY	ND
06/17/92	MB*QC*0618	34416*CLP1	BROMOMETHANE	UG/KG-DRY	ND
06/17/92	MB*QC*0618	34495*CLP1	VINYL CHLORIDE	UG/KG-DRY	ND
/17/92	MB*QC*0618	34314*CLP1	CHLOROETHANE	UG/KG-DRY	ND
17/92	MB*QC*0618	34426*CLP1	METHYLENE CHLORIDE	UG/KG-DRY	ND
/17/92	MB*QC*0618	75059*CLP1	ACETONE	UG/KG-DRY	21
06/17/92	MB*QC*0618	78544*CLP1	CARBON DISULFIDE	UG/KG-DRY	ND
06/17/92	MB*QC*0618	34504*CLP1	1,1-DICHLOROETHYLENE	UG/KG-DRY	ND
06/17/92	MB*QC*0618	34499*CLP1	1,1-DICHLOROETHANE	UG/KG-DRY	ND
06/17/92	MB*QC*0618	96464*CLP1	1,2-DICHLOROETHENE(TOTAL)	UG/KG	ND
06/17/92	MB*QC*0618	34318*CLP1	CHLOROFORM	UG/KG-DRY	ND
06/17/92	MB*QC*0618	34534*CLP1	1,2-DICHLOROETHANE	UG/KG-DRY	ND
06/17/92	MB*QC*0618	75078*CLP1	METHYL ETHYL KETONE	UG/KG-DRY	ND
06/17/92	MB*QC*0618	34509*CLP1	1,1,1-TRICHL'ETHANE	UG/KG-DRY	ND
06/17/92	MB*QC*0618	34299*CLP1	CARBON TETRACHLORIDE	UG/KG-DRY	ND
06/17/92	MB*QC*0618	98583*CLP1	VINYL ACETATE	UG/KG-DRY	ND
06/17/92	MB*QC*0618	34330*CLP1	BROMODICHLOROMETHANE	UG/KG-DRY	ND
06/17/92	MB*QC*0618	34544*CLP1	1,2-DICHLOROPROPANE	UG/KG-DRY	ND
06/17/92	MB*QC*0618	34702*CLP1	CIS-1,3-DICHLORO PROPENE	UG/KG-DRY	ND
06/17/92	MB*QC*0618	34487*CLP1	TRICHLOROETHENE	UG/KG-DRY	ND
06/17/92	MB*QC*0618	34309*CLP1	DIBROMOCHLOROMETHANE	UG/KG-DRY	ND
06/17/92	MB*QC*0618	34237*CLP1	BENZENE	UG/KG-DRY	ND
06/17/92	MB*QC*0618	34514*CLP1	1,1,2-TRICHL'ETHANE	UG/KG-DRY	ND
06/17/92	MB*QC*0618	34697*CLP1	TRANS-1,3-DICHLORO PROPENE	UG/KG-DRY	ND
06/17/92	MB*QC*0618	34290*CLP1	BROMOFORM	UG/KG-DRY	ND
06/17/92	MB*QC*0618	75166*CLP1	2-HEXANONE	UG/KG-DRY	ND
06/17/92	MB*QC*0618	75169*CLP1	METHYL ISOBUT'KETONE	UG/KG-DRY	ND
06/17/92	MB*QC*0618	34478*CLP1	TETRACHLOROETHENE	UG/KG-DRY	ND
06/17/92	MB*QC*0618	34519*CLP1	1,1,2,2-TETRACHLORO ETHANE	UG/KG-DRY	ND
06/17/92	MB*QC*0618	34483*CLP1	TOLUENE	UG/KG-DRY	ND
06/17/92	MB*QC*0618	34304*CLP1	CHLOROBENZENE	UG/KG-DRY	ND
06/17/92	MB*QC*0618	34374*CLP1	ETHYLBENZENE	UG/KG-DRY	ND
06/17/92	MB*QC*0618	45510*CLP1	XYLENE,SED	UG/KG-DRY	ND
06/17/92	MB*QC*0618	75192*CLP1	STYRENE	UG/KG-DRY	ND

Standard Matrix Spike Recovery Summary

DATE	SAMPLE	STORET	PARAMETER	%RECV	RECV CRIT	UNITS	TARGET	FOUND
/17/92	SP1*QC*1	34504*CLP1	1,1-DICHLOROETHYLENE	110	59-172	UG/KG-DRY	50	55
17/92	SP1*QC*1	34487*CLP1	TRICHLOROETHENE	104	62-137	UG/KG-DRY	50	52
/17/92	SP1*QC*1	34237*CLP1	BENZENE	104	66-142	UG/KG-DRY	50	52
06/17/92	SP1*QC*1	34483*CLP1	TOLUENE	104	59-139	UG/KG-DRY	50	52
06/17/92	SP1*QC*1	34304*CLP1	CHLOROBENZENE	102	60-133	UG/KG-DRY	50	51

ESE BATCH : 629044

Sample Matrix Spike Recovery Summary

DATE	SAMPLE	STORET	PARAMETER	%RECV	RECV CRIT	UNSPIKED	UNITS	TARGET	FOUND	RPD
06/17/92	SPM1*ALS2B*82	34504*CLP1	1,1-DICHLOROETHYLENE	102	59-172	0.0	UG/KG-DRY	54	55	
06/17/92	SPM1*ALS2B*82	34487*CLP1	TRICHLOROETHENE	104	62-137	0.0	UG/KG-DRY	54	56	
06/17/92	SPM1*ALS2B*82	34237*CLP1	BENZENE	100	66-142	0.0	UG/KG-DRY	54	54	
06/17/92	SPM1*ALS2B*82	34483*CLP1	TOLUENE	102	59-139	0.0	UG/KG-DRY	54	55	
06/17/92	SPM1*ALS2B*82	34304*CLP1	CHLOROBENZENE	102	60-133	0.0	UG/KG-DRY	54	55	
06/17/92	SPM2*ALS2B*82	34504*CLP1	1,1-DICHLOROETHYLENE	115	59-172	0.0	UG/KG-DRY	54	62	9.
06/17/92	SPM2*ALS2B*82	34487*CLP1	TRICHLOROETHENE	111	62-137	0.0	UG/KG-DRY	54	60	9.5
06/17/92	SPM2*ALS2B*82	34237*CLP1	BENZENE	106	66-142	0.0	UG/KG-DRY	54	57	9.5
06/17/92	SPM2*ALS2B*82	34483*CLP1	TOLUENE	109	59-139	0.0	UG/KG-DRY	54	59	9.5
06/17/92	SPM2*ALS2B*82	34304*CLP1	CHLOROBENZENE	107	60-133	0.0	UG/KG-DRY	54	58	9.5

Surrogate Spike Recovery Summary

DATE	SAMPLE	STORET	PARAMETER	UNITS	TARGET	FOUND	%RECV	RECV CRIT
06/17/92	MB*QC*0617	97031*SUR	1,2-DICHLOROETHANE-D(4)	UG/KG-DRY	50	46	92	70-121
06/17/92	MB*QC*0617	97026*SUR	TOLUENE-D(8)	UG/KG-DRY	50	48	96	81-117
06/17/92	MB*QC*0617	97027*SUR	BROMOFLUOROBENZENE	UG/KG-DRY	50	49	98	74-121
06/18/92	MB*QC*0618	97031*SUR	1,2-DICHLOROETHANE-D(4)	UG/KG-DRY	50	47	94	70-121
06/18/92	MB*QC*0618	97026*SUR	TOLUENE-D(8)	UG/KG-DRY	50	46	92	81-117
06/18/92	MB*QC*0618	97027*SUR	BROMOFLUOROBENZENE	UG/KG-DRY	50	50	100	74-121
06/18/92	DA*ALS2B*82	97031*SUR	1,2-DICHLOROETHANE-D(4)	UG/KG-DRY	50	52	100	70-121
06/18/92	DA*ALS2B*82	97026*SUR	TOLUENE-D(8)	UG/KG-DRY	50	51	100	81-117
06/18/92	DA*ALS2B*82	97027*SUR	BROMOFLUOROBENZENE	UG/KG-DRY	50	54	110	74-121
06/18/92	SPM1*ALS2B*82	97031*SUR	1,2-DICHLOROETHANE-D(4)	UG/KG-DRY	50	50	100	70-121
06/18/92	SPM1*ALS2B*82	97026*SUR	TOLUENE-D(8)	UG/KG-DRY	50	51	100	81-117
06/18/92	SPM1*ALS2B*82	97027*SUR	BROMOFLUOROBENZENE	UG/KG-DRY	50	53	110	74-121
06/18/92	SPM2*ALS2B*82	97031*SUR	1,2-DICHLOROETHANE-D(4)	UG/KG-DRY	50	53	110	70-121
06/18/92	SPM2*ALS2B*82	97026*SUR	TOLUENE-D(8)	UG/KG-DRY	50	53	110	81-117
06/18/92	SPM2*ALS2B*82	97027*SUR	BROMOFLUOROBENZENE	UG/KG-DRY	50	53	110	74-121
06/18/92	DA*ALS2B*45	97031*SUR	1,2-DICHLOROETHANE-D(4)	UG/KG-DRY	50	47	94	70-121
06/18/92	DA*ALS2B*45	97026*SUR	TOLUENE-D(8)	UG/KG-DRY	50	46	92	81-117
06/18/92	DA*ALS2B*45	97027*SUR	BROMOFLUOROBENZENE	UG/KG-DRY	50	49	98	74-121
06/18/92	DA*ALS2B*44	97031*SUR	1,2-DICHLOROETHANE-D(4)	UG/KG-DRY	50	49	98	70-121
06/18/92	DA*ALS2B*44	97026*SUR	TOLUENE-D(8)	UG/KG-DRY	50	50	100	81-117
06/18/92	DA*ALS2B*44	97027*SUR	BROMOFLUOROBENZENE	UG/KG-DRY	50	50	100	74-121
06/19/92	SP1*QC*1	97031*SUR	1,2-DICHLOROETHANE-D(4)	UG/KG-DRY	50	52	100	70-121
06/19/92	SP1*QC*1	97026*SUR	TOLUENE-D(8)	UG/KG-DRY	50	50	100	81-117
06/19/92	SP1*QC*1	97027*SUR	BROMOFLUOROBENZENE	UG/KG-DRY	50	50	100	74-121

ESE BATCH : G29044

Environmental Science and Engineering Analytical Services
Computer QC Checks

Batch No.: G29044 Analysis Date: 06/17/92 Analyst: W WHITEHILL

	Yes	"Exceptions" No	Comment / Corrective Action
Analysis holding time within criteria?	X		
Extract holding time within criteria?	X		
Method blank present?	X		
Method blank within acceptance criteria?	X		
Sample matrix spike present?	X		
Sample matrix spike within acceptance criteria?	X		
Sample matrix spike duplicate present?	X		
Sample matrix spike duplicate within acceptance criteria?	X		
Surrogate present?	X		
Surrogate within acceptance criteria?	X		

Note: Any "NO" answer requires a comment.

Semivolatile Organic Compounds

ESE BATCH : G28835
CLASSIFICATION : ACID EXTR - CLP SOW 2/88

STATUS : FINAL

METHOD BLANK CORRECTION METHOD : NONE

FIELD GRP	PROJECT NUMBER	PROJECT NAME	LAB COORDINATOR
ALS2B	3914042 0201	JMM/ALAMEDA CTO-121	JACKIE HARGROVE-ELLI

SAMPLE CODE	CLIENT ID	DATE ANALYZED	TIME ANALYZED
ALS2B*27	M-BG1	06/12/92	12:00PM
ALS2B*28	M-BG1	06/12/92	12:57PM
ALS2B*29	M-BG1	06/12/92	01:55PM
ALS2B*30	M-BG1	06/12/92	02:53PM
ALS2B*31	M-BG2	06/12/92	03:50PM
ALS2B*32	M-BG2	06/12/92	04:48PM
ALS2B*33	M-BG2	06/15/92	02:21PM
ALS2B*34	M-BG2	06/12/92	06:43PM
ALS2B*35	M-BG3	06/12/92	09:16PM
ALS2B*36	M-BG3	06/12/92	10:13PM
ALS2B*37	M-BG3	06/12/92	11:11PM
ALS2B*38	M-BG3	06/13/92	12:08AM
ALS2B*39	M-BG4	06/13/92	01:06AM
ALS2B*40	M-BG4	06/13/92	02:03AM
ALS2B*41	M-BG4	06/13/92	03:01AM
ALS2B*42	M-BG4	06/13/92	03:59AM

ESE BATCH : G28835

Method Blank Sample Summary

DATE	SAMPLE	STORET	PARAMETER	UNITS	FOUND
06/12/92	MB*QC*0602	34695*CLP1	PHENOL	UG/KG-DRY	ND
06/12/92	MB*QC*0602	34276*CLP1	BIS(2-CHLOROETHYL) ETHER	UG/KG-DRY	ND
06/12/92	MB*QC*0602	34589*CLP1	2-CHLOROPHENOL	UG/KG-DRY	ND
06/12/92	MB*QC*0602	34569*CLP1	1,3-DICHLOROBENZENE	UG/KG-DRY	ND
06/12/92	MB*QC*0602	34574*CLP1	1,4-DICHLOROBENZENE	UG/KG-DRY	ND
06/12/92	MB*QC*0602	34539*CLP1	1,2-DICHLOROBENZENE	UG/KG-DRY	ND
06/12/92	MB*QC*0602	75212*CLP1	BENZYL ALCOHOL	UG/KG-DRY	ND
06/12/92	MB*QC*0602	78872*CLP1	2-METHYLPHENOL	UG/KG-DRY	ND
06/12/92	MB*QC*0602	78803*CLP1	4-METHYLPHENOL	UG/KG-DRY	ND
06/12/92	MB*QC*0602	34286*CLP1	BIS(2-CHL'ISOPROPYL) ETHER	UG/KG-DRY	ND
06/12/92	MB*QC*0602	34431*CLP1	N-NITROSODI-N-PROPYLAMINE	UG/KG-DRY	ND
06/12/92	MB*QC*0602	34399*CLP1	HEXACHLOROETHANE	UG/KG-DRY	ND
06/12/92	MB*QC*0602	34450*CLP1	NITROBENZENE	UG/KG-DRY	ND
06/12/92	MB*QC*0602	34411*CLP1	ISOPHORONE	UG/KG-DRY	ND
06/12/92	MB*QC*0602	34594*CLP1	2-NITROPHENOL	UG/KG-DRY	ND
06/12/92	MB*QC*0602	34609*CLP1	2,4-DIMETHYLPHENOL	UG/KG-DRY	ND
06/12/92	MB*QC*0602	75315*CLP1	BENZOIC ACID	UG/KG-DRY	ND
06/12/92	MB*QC*0602	34281*CLP1	BIS(2-CHLOROETHOXY) METHANE	UG/KG-DRY	ND
06/12/92	MB*QC*0602	34604*CLP1	2,4-DICHLOROPHENOL	UG/KG-DRY	ND
06/12/92	MB*QC*0602	34554*CLP1	1,2,4-TRICH'BENZENE	UG/KG-DRY	ND
06/12/92	MB*QC*0602	34445*CLP1	NAPHTHALENE	UG/KG-DRY	ND
06/12/92	MB*QC*0602	78867*CLP1	4-CHLOROANILINE	UG/KG-DRY	ND
06/12/92	MB*QC*0602	39705*CLP1	HEXACHLOROBUTADIENE	UG/KG-DRY	ND
06/12/92	MB*QC*0602	34455*CLP1	4-CHLORO-3-METHYL PHENOL	UG/KG-DRY	ND
06/12/92	MB*QC*0602	78868*CLP1	2-METHYLNAPHTHALENE	UG/KG-DRY	ND
06/12/92	MB*QC*0602	34389*CLP1	HEXACHLOROCYCLOPENTADIENE	UG/KG-DRY	ND
06/12/92	MB*QC*0602	34624*CLP1	2,4,6-TRICH'PHENOL	UG/KG-DRY	ND
06/12/92	MB*QC*0602	98587*CLP1	2,4,5-TRICH'PHENOL	UG/KG-DRY	ND
06/12/92	MB*QC*0602	34584*CLP1	2-CHLORONAPHTHALENE	UG/KG-DRY	ND
06/12/92	MB*QC*0602	98588*CLP1	2-NITROANILINE	UG/KG-DRY	ND
06/12/92	MB*QC*0602	34344*CLP1	DIMETHYL PHTHALATE	UG/KG-DRY	ND
06/12/92	MB*QC*0602	34203*CLP1	ACENAPHTHYLENE	UG/KG-DRY	ND
06/12/92	MB*QC*0602	34629*CLP1	2,6-DINITROTOLUENE	UG/KG-DRY	ND
06/12/92	MB*QC*0602	78869*CLP1	3-NITROANILINE	UG/KG-DRY	ND
06/12/92	MB*QC*0602	34208*CLP1	ACENAPHTHENE	UG/KG-DRY	ND
06/12/92	MB*QC*0602	34619*CLP1	2,4-DINITROPHENOL	UG/KG-DRY	ND
06/12/92	MB*QC*0602	34649*CLP1	4-NITROPHENOL	UG/KG-DRY	ND
06/12/92	MB*QC*0602	75647*CLP1	DIBENZOFURAN	UG/KG-DRY	ND
06/12/92	MB*QC*0602	34614*CLP1	2,4-DINITROTOLUENE	UG/KG-DRY	ND
06/12/92	MB*QC*0602	34339*CLP1	DIETHYL PHTHALATE	UG/KG-DRY	ND
06/12/92	MB*QC*0602	34644*CLP1	4-CHLOROPHENYLPHENYL ETHER	UG/KG-DRY	ND
06/12/92	MB*QC*0602	34384*CLP1	FLUORENE	UG/KG-DRY	ND
06/12/92	MB*QC*0602	78870*CLP1	4-NITROANILINE	UG/KG-DRY	ND
06/12/92	MB*QC*0602	34436*CLP1	N-NITROSODIPHE'AMINE	UG/KG-DRY	ND
06/12/92	MB*QC*0602	34660*CLP1	2-METHYL-4,6-DINITROPHENOL	UG/KG-DRY	ND
06/12/92	MB*QC*0602	34639*CLP1	4-BROMOPHENYL PHENYL ETHER	UG/KG-DRY	ND
06/12/92	MB*QC*0602	39701*CLP1	HEXACHLOROBENZENE	UG/KG-DRY	ND
06/12/92	MB*QC*0602	39061*CLP1	PENTACHLPHENOL	UG/KG-DRY	ND
06/12/92	MB*QC*0602	34464*CLP1	PHENANTHRENE	UG/KG-DRY	ND
06/12/92	MB*QC*0602	34223*CLP1	ANTHRACENE	UG/KG-DRY	ND
06/12/92	MB*QC*0602	39112*CLP1	DI-N-BUTYL PHTHALATE	UG/KG-DRY	ND
06/12/92	MB*QC*0602	34379*CLP1	FLUORANTHENE	UG/KG-DRY	ND
06/12/92	MB*QC*0602	34472*CLP1	PYRENE	UG/KG-DRY	ND
06/12/92	MB*QC*0602	34295*CLP1	BUTYLBENZYLPHTHALATE	UG/KG-DRY	ND
06/12/92	MB*QC*0602	34634*CLP1	3,3-DICHL'BENZIDINE	UG/KG-DRY	ND
06/12/92	MB*QC*0602	34529*CLP1	BENZO(A)ANTHRACENE	UG/KG-DRY	ND
06/12/92	MB*QC*0602	34323*CLP1	CHRYSENE	UG/KG-DRY	ND
06/12/92	MB*QC*0602	39102*CLP1	BIS(2-ETHYLHEXYL) PHTHALATE	UG/KG-DRY	ND
06/12/92	MB*QC*0602	34599*CLP1	DI-N-OCTYL PHTHALATE	UG/KG-DRY	ND
06/12/92	MB*QC*0602	34233*CLP1	BENZO(B)FLUORANTHENE	UG/KG-DRY	ND
06/12/92	MB*QC*0602	34245*CLP1	BENZO(K)FLUORANTHENE	UG/KG-DRY	ND
06/12/92	MB*QC*0602	34250*CLP1	BENZO(A)PYRENE	UG/KG-DRY	ND
06/12/92	MB*QC*0602	34406*CLP1	INDENO(1,2,3-CD) PYRENE	UG/KG-DRY	ND
06/12/92	MB*QC*0602	34559*CLP1	DIBEN(A,H)ANTHRACENE	UG/KG-DRY	ND
06/12/92	MB*QC*0602	34524*CLP1	BENZO(GHI)PERYLENE	UG/KG-DRY	ND

Standard Matrix Spike Recovery Summary

DATE	SAMPLE	STORET	PARAMETER	%RECV	RECV CRIT	UNITS	TARGET	FOUND
06/12/92	SP1*QC*1	34695*CLP1	PHENOL	115	26-90	UG/KG-DRY	13000	15000
06/12/92	SP1*QC*1	34589*CLP1	2-CHLOROPHENOL	108	25-102	UG/KG-DRY	13000	14000
06/12/92	SP1*QC*1	34574*CLP1	1,4-DICHLOROBENZENE	87	28-104	UG/KG-DRY	6700	5800
06/12/92	SP1*QC*1	34431*CLP1	N-NITROSODI-N-PROPYLAMINE	91	41-126	UG/KG-DRY	6700	6100
06/12/92	SP1*QC*1	34554*CLP1	1,2,4-TRICH'BENZENE	90	38-107	UG/KG-DRY	6700	6000
06/12/92	SP1*QC*1	34455*CLP1	4-CHLORO-3-METHYL PHENOL	100	26-103	UG/KG-DRY	13000	13000
06/12/92	SP1*QC*1	34208*CLP1	ACENAPHTHENE	97	31-137	UG/KG-DRY	6700	6500
06/12/92	SP1*QC*1	34649*CLP1	4-NITROPHENOL	100	11-114	UG/KG-DRY	13000	13000

ESE BATCH : G28835

Standard Matrix Spike Recovery Summary

DATE	SAMPLE	STORET	PARAMETER	%RECV	RECV CRIT	UNITS	TARGET	FOUND
06/12/92	SP1*QC*1	34614*CLP1	2,4-DINITROTOLUENE	91	27.7-89.3	UG/KG-DRY	6700	6100
06/12/92	SP1*QC*1	39061*CLP1	PENTACHLPHENOL	115	17-109	UG/KG-DRY	13000	15000
06/12/92	SP1*QC*1	34472*CLP1	PYRENE	121	35-142	UG/KG-DRY	6700	8100

Sample Matrix Spike Recovery Summary

DATE	SAMPLE	STORET	PARAMETER	%RECV	RECV CRIT	UNSPIKED	UNITS	TARGET	FOUND	RPD
06/12/92	SPM1*ALS2B*31	34695*CLP1	PHENOL	93	26-90	0.0	UG/KG-DRY	14000	13000	
06/12/92	SPM1*ALS2B*31	34589*CLP1	2-CHLOROPHENOL	86	25-102	0.0	UG/KG-DRY	14000	12000	
06/12/92	SPM1*ALS2B*31	34574*CLP1	1,4-DICHLOROBENZENE	81	28-104	0.0	UG/KG-DRY	7200	5800	
06/12/92	SPM1*ALS2B*31	34431*CLP1	N-NITROSODI-N-PROPYLAMINE	85	41-126	0.0	UG/KG-DRY	7200	6100	
06/12/92	SPM1*ALS2B*31	34554*CLP1	1,2,4-TRICH'BENZENE	92	38-107	0.0	UG/KG-DRY	7200	6600	
06/12/92	SPM1*ALS2B*31	34455*CLP1	4-CHLORO-3-METHYL PHENOL	114	26-103	0.0	UG/KG-DRY	14000	16000	
06/12/92	SPM1*ALS2B*31	34208*CLP1	ACENAPHTHENE	108	31-137	0.0	UG/KG-DRY	7200	7800	
06/12/92	SPM1*ALS2B*31	34649*CLP1	4-NITROPHENOL	114	11-114	0.0	UG/KG-DRY	14000	16000	
06/12/92	SPM1*ALS2B*31	34614*CLP1	2,4-DINITROTOLUENE	99	27.7-89.3	0.0	UG/KG-DRY	7200	7100	
06/12/92	SPM1*ALS2B*31	39061*CLP1	PENTACHLPHENOL	100	17-109	0.0	UG/KG-DRY	14000	14000	
06/12/92	SPM1*ALS2B*31	34472*CLP1	PYRENE	90	35-142	180	UG/KG-DRY	7200	6500	
006/12/92	SPM2*ALS2B*31	34695*CLP1	PHENOL	100	26-90	0.0	UG/KG-DRY	14000	14000	4.2
06/12/92	SPM2*ALS2B*31	34589*CLP1	2-CHLOROPHENOL	93	25-102	0.0	UG/KG-DRY	14000	13000	4.5
06/12/92	SPM2*ALS2B*31	34574*CLP1	1,4-DICHLOROBENZENE	89	28-104	0.0	UG/KG-DRY	7200	6400	9.4
06/12/92	SPM2*ALS2B*31	34431*CLP1	N-NITROSODI-N-PROPYLAMINE	92	41-126	0.0	UG/KG-DRY	7200	6600	6.8
06/12/92	SPM2*ALS2B*31	34554*CLP1	1,2,4-TRICH'BENZENE	92	38-107	0.0	UG/KG-DRY	7200	6600	1.1
06/12/92	SPM2*ALS2B*31	34455*CLP1	4-CHLORO-3-METHYL PHENOL	100	26-103	0.0	UG/KG-DRY	14000	14000	13
06/12/92	SPM2*ALS2B*31	34208*CLP1	ACENAPHTHENE	100	31-137	0.0	UG/KG-DRY	7200	7200	9.5
06/12/92	SPM2*ALS2B*31	34649*CLP1	4-NITROPHENOL	100	11-114	0.0	UG/KG-DRY	14000	14000	13
06/12/92	SPM2*ALS2B*31	34614*CLP1	2,4-DINITROTOLUENE	93	27.7-89.3	0.0	UG/KG-DRY	7200	6700	6.3
06/12/92	SPM2*ALS2B*31	39061*CLP1	PENTACHLPHENOL	86	17-109	0.0	UG/KG-DRY	14000	12000	19
06/12/92	SPM2*ALS2B*31	34472*CLP1	PYRENE	89	35-142	180	UG/KG-DRY	7200	6400	2.2

Surrogate Spike Recovery Summary

DATE	SAMPLE	STORET	PARAMETER	UNITS	TARGET	FOUND	%RECV	RECV CRIT
06/12/92	MB*QC*0602	98325*SUR	2-FLUOROPHENOL	UG/KG-DRY	6700	7600	110	25-121
06/12/92	MB*QC*0602	98326*SUR	PHENOL-D(5)	UG/KG-DRY	6670	6880	103	24-113
06/12/92	MB*QC*0602	98327*SUR	NITROBENZENE-D(5)	UG/KG-DRY	3300	2900	88	23-120
06/12/92	MB*QC*0602	98330*SUR	2-FLUOROBIPHENYL	UG/KG-DRY	3300	3000	91	30-115
06/12/92	MB*QC*0602	97448*SUR	2,4,6-TRIBROMOPHENOL	UG/KG	6670	5310	79.6	19-122
06/12/92	MB*QC*0602	97449*SUR	TERPHENYL-D(14)	UG/KG	3330	3590	108	18-137
06/12/92	SP1*QC*1	98325*SUR	2-FLUOROPHENOL	UG/KG-DRY	6700	8200	120	25-121
06/12/92	SP1*QC*1	98326*SUR	PHENOL-D(5)	UG/KG-DRY	6670	7260	109	24-113
06/12/92	SP1*QC*1	98327*SUR	NITROBENZENE-D(5)	UG/KG-DRY	3300	3000	91	23-120
06/12/92	SP1*QC*1	98330*SUR	2-FLUOROBIPHENYL	UG/KG-DRY	3300	3200	97	30-115
06/12/92	SP1*QC*1	97448*SUR	2,4,6-TRIBROMOPHENOL	UG/KG	6670	6330	94.9	19-122
06/12/92	SP1*QC*1	97449*SUR	TERPHENYL-D(14)	UG/KG	3330	3620	109	18-137
06/12/92	DA*ALS2B*27	98325*SUR	2-FLUOROPHENOL	UG/KG-DRY	6700	8900	130	25-121
06/12/92	DA*ALS2B*27	98326*SUR	PHENOL-D(5)	UG/KG-DRY	6670	7440	112	24-113
06/12/92	DA*ALS2B*27	98327*SUR	NITROBENZENE-D(5)	UG/KG-DRY	3300	3300	100	23-120
06/12/92	DA*ALS2B*27	98330*SUR	2-FLUOROBIPHENYL	UG/KG-DRY	3300	3200	97	30-115
06/12/92	DA*ALS2B*27	97448*SUR	2,4,6-TRIBROMOPHENOL	UG/KG	6670	5750	86.2	19-122
06/12/92	DA*ALS2B*27	97449*SUR	TERPHENYL-D(14)	UG/KG	3330	3300	99.1	18-137
06/12/92	DA*ALS2B*28	98325*SUR	2-FLUOROPHENOL	UG/KG-DRY	6700	7100	110	25-121
06/12/92	DA*ALS2B*28	98326*SUR	PHENOL-D(5)	UG/KG-DRY	6670	6570	98.5	24-113
06/12/92	DA*ALS2B*28	98327*SUR	NITROBENZENE-D(5)	UG/KG-DRY	3300	3000	91	23-120
06/12/92	DA*ALS2B*28	98330*SUR	2-FLUOROBIPHENYL	UG/KG-DRY	3300	2700	82	30-115
06/12/92	DA*ALS2B*28	97448*SUR	2,4,6-TRIBROMOPHENOL	UG/KG	6670	5420	81.3	19-122
06/12/92	DA*ALS2B*28	97449*SUR	TERPHENYL-D(14)	UG/KG	3330	3460	104	18-137
06/12/92	DA*ALS2B*29	98325*SUR	2-FLUOROPHENOL	UG/KG-DRY	6700	7400	110	25-121
06/12/92	DA*ALS2B*29	98326*SUR	PHENOL-D(5)	UG/KG-DRY	6670	7400	111	24-113
06/12/92	DA*ALS2B*29	98327*SUR	NITROBENZENE-D(5)	UG/KG-DRY	3300	3100	94	23-120
06/12/92	DA*ALS2B*29	98330*SUR	2-FLUOROBIPHENYL	UG/KG-DRY	3300	2700	82	30-115
06/12/92	DA*ALS2B*29	97448*SUR	2,4,6-TRIBROMOPHENOL	UG/KG	6670	5360	80.4	19-122
06/12/92	DA*ALS2B*29	97449*SUR	TERPHENYL-D(14)	UG/KG	3330	3730	112	18-137
06/12/92	DA*ALS2B*30	98325*SUR	2-FLUOROPHENOL	UG/KG-DRY	6700	7600	110	25-121
06/12/92	DA*ALS2B*30	98326*SUR	PHENOL-D(5)	UG/KG-DRY	6670	6650	99.7	24-113
06/12/92	DA*ALS2B*30	98327*SUR	NITROBENZENE-D(5)	UG/KG-DRY	3300	3000	91	23-120
06/12/92	DA*ALS2B*30	98330*SUR	2-FLUOROBIPHENYL	UG/KG-DRY	3300	2900	88	30-115
06/12/92	DA*ALS2B*30	97448*SUR	2,4,6-TRIBROMOPHENOL	UG/KG	6670	3780	56.7	19-122
06/12/92	DA*ALS2B*30	97449*SUR	TERPHENYL-D(14)	UG/KG	3330	3410	102	18-137
06/12/92	DA*ALS2B*31	98325*SUR	2-FLUOROPHENOL	UG/KG-DRY	6700	7200	110	25-121
06/12/92	DA*ALS2B*31	98326*SUR	PHENOL-D(5)	UG/KG-DRY	6670	6830	102	24-113
06/12/92	DA*ALS2B*31	98327*SUR	NITROBENZENE-D(5)	UG/KG-DRY	3300	3400	100	23-120
06/12/92	DA*ALS2B*31	98330*SUR	2-FLUOROBIPHENYL	UG/KG-DRY	3300	2900	88	30-115
06/12/92	DA*ALS2B*31	97448*SUR	2,4,6-TRIBROMOPHENOL	UG/KG	6670	5790	86.8	19-122
06/12/92	DA*ALS2B*31	97449*SUR	TERPHENYL-D(14)	UG/KG	3330	3290	98.8	18-137
06/12/92	DA*ALS2B*32	98325*SUR	2-FLUOROPHENOL	UG/KG-DRY	6700	8000	120	25-121
06/12/92	DA*ALS2B*32	98326*SUR	PHENOL-D(5)	UG/KG-DRY	6670	7160	107	24-113

ESE BATCH : 028835

Surrogate Spike Recovery Summary

DATE	SAMPLE	STORET	PARAMETER	UNITS	TARGET	FOUND	%RECV	RECV CRIT
06/12/92	DA*ALS2B*32	98327*SUR	NITROBENZENE-D(5)	UG/KG-DRY	3300	3100	94	23-120
06/12/92	DA*ALS2B*32	98330*SUR	2-FLUOROBIPHENYL	UG/KG-DRY	3300	3100	94	30-115
06/12/92	DA*ALS2B*32	97448*SUR	2,4,6-TRIBROMOPHENOL	UG/KG	6670	6970	104	19-122
06/12/92	DA*ALS2B*32	97449*SUR	TERPHENYL-D(14)	UG/KG	3330	3930	118	18-137
/15/92	DA*ALS2B*33	98325*SUR	2-FLUOROPHENOL	UG/KG-DRY	6700	7100	110	25-121
/15/92	DA*ALS2B*33	98326*SUR	PHENOL-D(5)	UG/KG-DRY	6670	6220	93.3	24-113
06/15/92	DA*ALS2B*33	98327*SUR	NITROBENZENE-D(5)	UG/KG-DRY	3300	3100	94	23-120
06/15/92	DA*ALS2B*33	98330*SUR	2-FLUOROBIPHENYL	UG/KG-DRY	3300	2800	85	30-115
06/15/92	DA*ALS2B*33	97448*SUR	2,4,6-TRIBROMOPHENOL	UG/KG	6670	4590	68.8	19-122
06/15/92	DA*ALS2B*33	97449*SUR	TERPHENYL-D(14)	UG/KG	3330	3730	112	18-137
06/12/92	DA*ALS2B*34	98325*SUR	2-FLUOROPHENOL	UG/KG-DRY	6700	8000	120	25-121
06/12/92	DA*ALS2B*34	98326*SUR	PHENOL-D(5)	UG/KG-DRY	6670	7030	105	24-113
06/12/92	DA*ALS2B*34	98327*SUR	NITROBENZENE-D(5)	UG/KG-DRY	3300	3200	97	23-120
06/12/92	DA*ALS2B*34	98330*SUR	2-FLUOROBIPHENYL	UG/KG-DRY	3300	3200	97	30-115
06/12/92	DA*ALS2B*34	97448*SUR	2,4,6-TRIBROMOPHENOL	UG/KG	6670	4950	74.2	19-122
06/12/92	DA*ALS2B*34	97449*SUR	TERPHENYL-D(14)	UG/KG	3330	3470	104	18-137
06/12/92	DA*ALS2B*35	98325*SUR	2-FLUOROPHENOL	UG/KG-DRY	6700	7300	110	25-121
06/12/92	DA*ALS2B*35	98326*SUR	PHENOL-D(5)	UG/KG-DRY	6670	6510	97.6	24-113
06/12/92	DA*ALS2B*35	98327*SUR	NITROBENZENE-D(5)	UG/KG-DRY	3300	3100	94	23-120
06/12/92	DA*ALS2B*35	98330*SUR	2-FLUOROBIPHENYL	UG/KG-DRY	3300	3100	94	30-115
06/12/92	DA*ALS2B*35	97448*SUR	2,4,6-TRIBROMOPHENOL	UG/KG	6670	6670	100.0	19-122
06/12/92	DA*ALS2B*35	97449*SUR	TERPHENYL-D(14)	UG/KG	3330	2980	89.5	18-137
06/12/92	DA*ALS2B*36	98325*SUR	2-FLUOROPHENOL	UG/KG-DRY	6700	7200	110	25-121
06/12/92	DA*ALS2B*36	98326*SUR	PHENOL-D(5)	UG/KG-DRY	6670	6550	98.2	24-113
06/12/92	DA*ALS2B*36	98327*SUR	NITROBENZENE-D(5)	UG/KG-DRY	3300	3300	100	23-120
06/12/92	DA*ALS2B*36	98330*SUR	2-FLUOROBIPHENYL	UG/KG-DRY	3300	3200	97	30-115
06/12/92	DA*ALS2B*36	97448*SUR	2,4,6-TRIBROMOPHENOL	UG/KG	6670	6640	99.6	19-122
06/12/92	DA*ALS2B*36	97449*SUR	TERPHENYL-D(14)	UG/KG	3330	2210	66.4	18-137
06/12/92	DA*ALS2B*37	98325*SUR	2-FLUOROPHENOL	UG/KG-DRY	6700	7400	110	25-121
06/12/92	DA*ALS2B*37	98326*SUR	PHENOL-D(5)	UG/KG-DRY	6670	6680	100	24-113
06/12/92	DA*ALS2B*37	98327*SUR	NITROBENZENE-D(5)	UG/KG-DRY	3300	2900	88	23-120
06/12/92	DA*ALS2B*37	98330*SUR	2-FLUOROBIPHENYL	UG/KG-DRY	3300	2800	85	30-115
06/12/92	DA*ALS2B*37	97448*SUR	2,4,6-TRIBROMOPHENOL	UG/KG	6670	6090	91.3	19-122
06/12/92	DA*ALS2B*37	97449*SUR	TERPHENYL-D(14)	UG/KG	3330	3860	116	18-137
06/13/92	DA*ALS2B*38	98325*SUR	2-FLUOROPHENOL	UG/KG-DRY	6700	7500	110	25-121
06/13/92	DA*ALS2B*38	98326*SUR	PHENOL-D(5)	UG/KG-DRY	6670	6830	102	24-113
06/13/92	DA*ALS2B*38	98327*SUR	NITROBENZENE-D(5)	UG/KG-DRY	3300	3200	97	23-120
06/13/92	DA*ALS2B*38	98330*SUR	2-FLUOROBIPHENYL	UG/KG-DRY	3300	2900	88	30-115
06/13/92	DA*ALS2B*38	97448*SUR	2,4,6-TRIBROMOPHENOL	UG/KG	6670	6320	94.8	19-122
/13/92	DA*ALS2B*38	97449*SUR	TERPHENYL-D(14)	UG/KG	3330	3920	118	18-137
13/92	DA*ALS2B*39	98325*SUR	2-FLUOROPHENOL	UG/KG-DRY	6700	7500	110	25-121
/13/92	DA*ALS2B*39	98326*SUR	PHENOL-D(5)	UG/KG-DRY	6670	7100	106	24-113
06/13/92	DA*ALS2B*39	98327*SUR	NITROBENZENE-D(5)	UG/KG-DRY	3300	3200	97	23-120
06/13/92	DA*ALS2B*39	98330*SUR	2-FLUOROBIPHENYL	UG/KG-DRY	3300	3300	100	30-115
06/13/92	DA*ALS2B*39	97448*SUR	2,4,6-TRIBROMOPHENOL	UG/KG	6670	7260	109	19-122
06/13/92	DA*ALS2B*39	97449*SUR	TERPHENYL-D(14)	UG/KG	3330	3430	103	18-137
06/13/92	DA*ALS2B*40	98325*SUR	2-FLUOROPHENOL	UG/KG-DRY	6700	7300	110	25-121
06/13/92	DA*ALS2B*40	98326*SUR	PHENOL-D(5)	UG/KG-DRY	6670	6350	95.2	24-113
06/13/92	DA*ALS2B*40	98327*SUR	NITROBENZENE-D(5)	UG/KG-DRY	3300	3400	100	23-120
06/13/92	DA*ALS2B*40	98330*SUR	2-FLUOROBIPHENYL	UG/KG-DRY	3300	2900	88	30-115
06/13/92	DA*ALS2B*40	97448*SUR	2,4,6-TRIBROMOPHENOL	UG/KG	6670	5570	83.5	19-122
06/13/92	DA*ALS2B*40	97449*SUR	TERPHENYL-D(14)	UG/KG	3330	3660	110	18-137
06/13/92	DA*ALS2B*41	98325*SUR	2-FLUOROPHENOL	UG/KG-DRY	6700	6700	100	25-121
06/13/92	DA*ALS2B*41	98326*SUR	PHENOL-D(5)	UG/KG-DRY	6670	6310	94.6	24-113
06/13/92	DA*ALS2B*41	98327*SUR	NITROBENZENE-D(5)	UG/KG-DRY	3300	2600	79	23-120
06/13/92	DA*ALS2B*41	98330*SUR	2-FLUOROBIPHENYL	UG/KG-DRY	3300	2800	85	30-115
06/13/92	DA*ALS2B*41	97448*SUR	2,4,6-TRIBROMOPHENOL	UG/KG	6670	5910	88.6	19-122
06/13/92	DA*ALS2B*41	97449*SUR	TERPHENYL-D(14)	UG/KG	3330	3830	115	18-137
06/13/92	DA*ALS2B*42	98325*SUR	2-FLUOROPHENOL	UG/KG-DRY	6700	7400	110	25-121
06/13/92	DA*ALS2B*42	98326*SUR	PHENOL-D(5)	UG/KG-DRY	6670	6120	91.8	24-113
06/13/92	DA*ALS2B*42	98327*SUR	NITROBENZENE-D(5)	UG/KG-DRY	3300	2900	88	23-120
06/13/92	DA*ALS2B*42	98330*SUR	2-FLUOROBIPHENYL	UG/KG-DRY	3300	2700	82	30-115
06/13/92	DA*ALS2B*42	97448*SUR	2,4,6-TRIBROMOPHENOL	UG/KG	6670	5660	84.9	19-122
06/13/92	DA*ALS2B*42	97449*SUR	TERPHENYL-D(14)	UG/KG	3330	3550	107	18-137
06/13/92	SPM1*ALS2B*31	98325*SUR	2-FLUOROPHENOL	UG/KG-DRY	6700	6200	93	25-121
06/13/92	SPM1*ALS2B*31	98326*SUR	PHENOL-D(5)	UG/KG-DRY	6670	5900	88.5	24-113
06/13/92	SPM1*ALS2B*31	98327*SUR	NITROBENZENE-D(5)	UG/KG-DRY	3300	3400	100	23-120
06/13/92	SPM1*ALS2B*31	98330*SUR	2-FLUOROBIPHENYL	UG/KG-DRY	3300	3100	94	30-115
06/13/92	SPM1*ALS2B*31	97448*SUR	2,4,6-TRIBROMOPHENOL	UG/KG	6670	7400	111	19-122
06/13/92	SPM1*ALS2B*31	97449*SUR	TERPHENYL-D(14)	UG/KG	3330	2860	85.9	18-137
06/13/92	SPM2*ALS2B*31	98325*SUR	2-FLUOROPHENOL	UG/KG-DRY	6700	7100	110	25-121
06/13/92	SPM2*ALS2B*31	98326*SUR	PHENOL-D(5)	UG/KG-DRY	6670	6550	98.2	24-113
06/13/92	SPM2*ALS2B*31	98327*SUR	NITROBENZENE-D(5)	UG/KG-DRY	3300	3100	94	23-120
06/13/92	SPM2*ALS2B*31	98330*SUR	2-FLUOROBIPHENYL	UG/KG-DRY	3300	3000	91	30-115
13/92	SPM2*ALS2B*31	97448*SUR	2,4,6-TRIBROMOPHENOL	UG/KG	6670	6350	95.2	19-122
.3/92	SPM2*ALS2B*31	97449*SUR	TERPHENYL-D(14)	UG/KG	3330	2780	83.5	18-137

ESE BATCH : G28835

Environmental Science and Engineering Analytical Services
Computer QC Checks

Batch No.: G28835 Analysis Date: 06/12/92 Analyst: CAROLYN DIAZ

	Yes	"Exceptions" No	Comment / Corrective Action
Analysis holding time within criteria?	X		
Extract holding time within criteria?	X		
Method blank present?	X		
Method blank within acceptance criteria?	X		
Sample matrix spike present?	X		
Sample matrix spike within acceptance criteria?		X	34695*CLP1 34455*CLP1 34614*CLP1
Sample matrix spike duplicate present?	X		
Sample matrix spike duplicate within acceptance criteria?		X	34695*CLP1 34614*CLP1
Surrogate present?	X		
Surrogate within acceptance criteria?		X	98325*SUR

Note: Any "NO" answer requires a comment.

OVERRIDE COMMENTS

PROB:SAMPLE MATRIX SPIKE NOT WITHIN
ACCEPTANCE CRITERIA.
EXPL:FOLLOWING CLP SOW 2/88 MATRIX
SPIKE RECOVERY RANGES ARE AD-
VISORY; FALLING OUTSIDE THESE
RANGES DOES NOT INITIATE RE-
ANALYSIS.CSD/6/19/92

PROB:SAMPLE MATRIX SPIKE DUPLICATE
NOT WITHIN ACCEPTANCE CRITERIA.
EXPL:SEE ABOVE.

PROB:SURROGATE NOT WITHIN ACCEPTANCE
CRITERIA.
EXPL:FOLLOWING CLP SOW 3/88 ONE ACID
AND ONE BASE NEUTRAL SURROGATE
ARE ALLOWED TO FALL OUTSIDE THESE RE-
COVERY RANGES WITHOUT INITIATING
RE-ANALYSIS.CSD/6/19/92

ESE BATCH : G28908
CLASSIFICATION : ACID EXTR - CLP SOW 2/88

STATUS : FINAL

METHOD BLANK CORRECTION METHOD : NONE

FIELD GRP	PROJECT NUMBER	PROJECT NAME	LAB COORDINATOR
S2B	3914042 0201	JMM/ALAMEDA CTO-121	JACKIE HARGROVE-ELLI

SAMPLE CODE	CLIENT ID	DATE ANALYZED	TIME ANALYZED
ALS2B*43	BG-DUP1	06/16/92	07:27PM
ALS2B*73	B-05HW-02	06/17/92	11:41AM
ALS2B*74	B-05HW-02	06/16/92	09:22PM
ALS2B*75	B-05HW-02	06/16/92	11:55PM
ALS2B*76	B-05HW-02	06/17/92	12:52AM
ALS2B*77	M-05HW-01	06/17/92	01:50AM
ALS2B*78	M-05HW-01	06/17/92	02:48AM
ALS2B*79	M-05HW-01	06/17/92	12:37PM
ALS2B*80	M-05HW-01	06/17/92	01:33PM
ALS2B*81	05HW-DUP1	06/17/92	02:28PM
ALS2B*83	M-05BS-01	06/17/92	04:20PM
ALS2B*84	M-05BS-01	06/17/92	05:15PM
ALS2B*85	M-05BS-01	06/17/92	06:11PM
ALS2B*86	M-05BS-01	06/17/92	07:07PM

ESE BATCH : G28908

Method Blank Sample Summary

DATE	SAMPLE	STORET	PARAMETER	UNITS	FOUND
06/16/92	MB*QC*0602	34695*CLP1	PHENOL	UG/KG-DRY	ND
06/16/92	MB*QC*0602	34276*CLP1	BIS(2-CHLOROETHYL) ETHER	UG/KG-DRY	ND
06/16/92	MB*QC*0602	34589*CLP1	2-CHLOROPHENOL	UG/KG-DRY	ND
06/16/92	MB*QC*0602	34569*CLP1	1,3-DICHLOROBENZENE	UG/KG-DRY	ND
06/16/92	MB*QC*0602	34574*CLP1	1,4-DICHLOROBENZENE	UG/KG-DRY	ND
06/16/92	MB*QC*0602	34539*CLP1	1,2-DICHLOROBENZENE	UG/KG-DRY	ND
06/16/92	MB*QC*0602	75212*CLP1	BENZYL ALCOHOL	UG/KG-DRY	ND
06/16/92	MB*QC*0602	78872*CLP1	2-METHYLPHENOL	UG/KG-DRY	ND
06/16/92	MB*QC*0602	78803*CLP1	4-METHYLPHENOL	UG/KG-DRY	ND
06/16/92	MB*QC*0602	34286*CLP1	BIS(2-CHL'ISOPROPYL) ETHER	UG/KG-DRY	ND
06/16/92	MB*QC*0602	34431*CLP1	N-NITROSODI-N-PROPYLAMINE	UG/KG-DRY	ND
06/16/92	MB*QC*0602	34399*CLP1	HEXACHLOROETHANE	UG/KG-DRY	ND
06/16/92	MB*QC*0602	34450*CLP1	NITROBENZENE	UG/KG-DRY	ND
06/16/92	MB*QC*0602	34411*CLP1	ISOPHORONE	UG/KG-DRY	ND
06/16/92	MB*QC*0602	34594*CLP1	2-NITROPHENOL	UG/KG-DRY	ND
06/16/92	MB*QC*0602	34609*CLP1	2,4-DIMETHYLPHENOL	UG/KG-DRY	ND
06/16/92	MB*QC*0602	75315*CLP1	BENZOIC ACID	UG/KG-DRY	ND
06/16/92	MB*QC*0602	34281*CLP1	BIS(2-CHLOROETHOXY) METHANE	UG/KG-DRY	ND
06/16/92	MB*QC*0602	34604*CLP1	2,4-DICHLOROPHENOL	UG/KG-DRY	ND
06/16/92	MB*QC*0602	34554*CLP1	1,2,4-TRICH'BENZENE	UG/KG-DRY	ND
06/16/92	MB*QC*0602	34445*CLP1	NAPHTHALENE	UG/KG-DRY	ND
06/16/92	MB*QC*0602	78867*CLP1	4-CHLOROANILINE	UG/KG-DRY	ND
06/16/92	MB*QC*0602	39705*CLP1	HEXACHLOROBUTADIENE	UG/KG-DRY	ND
06/16/92	MB*QC*0602	34455*CLP1	4-CHLORO-3-METHYL PHENOL	UG/KG-DRY	ND
06/16/92	MB*QC*0602	78868*CLP1	2-METHYLNAPHTHALENE	UG/KG-DRY	ND
06/16/92	MB*QC*0602	34389*CLP1	HEXACHLOROCYCLOPENTADIENE	UG/KG-DRY	ND
06/16/92	MB*QC*0602	34624*CLP1	2,4,6-TRICH'PHENOL	UG/KG-DRY	ND
06/16/92	MB*QC*0602	98587*CLP1	2,4,5-TRICH'PHENOL	UG/KG-DRY	ND
06/16/92	MB*QC*0602	34584*CLP1	2-CHLORONAPHTHALENE	UG/KG-DRY	ND
06/16/92	MB*QC*0602	98588*CLP1	2-NITROANILINE	UG/KG-DRY	ND
06/16/92	MB*QC*0602	34344*CLP1	DIMETHYL PHTHALATE	UG/KG-DRY	ND
06/16/92	MB*QC*0602	34203*CLP1	ACENAPHTHYLENE	UG/KG-DRY	ND
06/16/92	MB*QC*0602	34629*CLP1	2,6-DINITROTOLUENE	UG/KG-DRY	ND
06/16/92	MB*QC*0602	78869*CLP1	3-NITROANILINE	UG/KG-DRY	ND
06/16/92	MB*QC*0602	34208*CLP1	ACENAPHTHENE	UG/KG-DRY	ND
06/16/92	MB*QC*0602	34619*CLP1	2,4-DINITROPHENOL	UG/KG-DRY	ND
06/16/92	MB*QC*0602	34649*CLP1	4-NITROPHENOL	UG/KG-DRY	ND
06/16/92	MB*QC*0602	75647*CLP1	DIBENZOFURAN	UG/KG-DRY	ND
06/16/92	MB*QC*0602	34614*CLP1	2,4-DINITROTOLUENE	UG/KG-DRY	ND
06/16/92	MB*QC*0602	34339*CLP1	DIETHYL PHTHALATE	UG/KG-DRY	ND
06/16/92	MB*QC*0602	34644*CLP1	4-CHLOROPHENYLPHENYL ETHER	UG/KG-DRY	ND
06/16/92	MB*QC*0602	34384*CLP1	FLUORENE	UG/KG-DRY	ND
06/16/92	MB*QC*0602	78870*CLP1	4-NITROANILINE	UG/KG-DRY	ND
06/16/92	MB*QC*0602	34436*CLP1	N-NITROSODIPHE'AMINE	UG/KG-DRY	ND
06/16/92	MB*QC*0602	34660*CLP1	2-METHYL-4,6-DINITROPHENOL	UG/KG-DRY	ND
06/16/92	MB*QC*0602	34639*CLP1	4-BROMOPHENYL PHENYL ETHER	UG/KG-DRY	ND
06/16/92	MB*QC*0602	39701*CLP1	HEXACHLOROBENZENE	UG/KG-DRY	ND
06/16/92	MB*QC*0602	39061*CLP1	PENTACHLPHENOL	UG/KG-DRY	ND
06/16/92	MB*QC*0602	34464*CLP1	PHENANTHRENE	UG/KG-DRY	ND
06/16/92	MB*QC*0602	34223*CLP1	ANTHRACENE	UG/KG-DRY	ND
06/16/92	MB*QC*0602	39112*CLP1	DI-N-BUTYL PHTHALATE	UG/KG-DRY	ND
06/16/92	MB*QC*0602	34379*CLP1	FLUORANTHENE	UG/KG-DRY	ND
06/16/92	MB*QC*0602	34472*CLP1	PYRENE	UG/KG-DRY	ND
06/16/92	MB*QC*0602	34295*CLP1	BUTYLBENZYLPHTHALATE	UG/KG-DRY	ND
06/16/92	MB*QC*0602	34634*CLP1	3,3-DICHL'BENZIDINE	UG/KG-DRY	ND
06/16/92	MB*QC*0602	34529*CLP1	BENZO(A)ANTHRACENE	UG/KG-DRY	ND
06/16/92	MB*QC*0602	34323*CLP1	CHRYSENE	UG/KG-DRY	ND
06/16/92	MB*QC*0602	39102*CLP1	BIS(2-ETHYLHEXYL) PHTHALATE	UG/KG-DRY	290
06/16/92	MB*QC*0602	34599*CLP1	DI-N-OCTYL PHTHALATE	UG/KG-DRY	ND
06/16/92	MB*QC*0602	34233*CLP1	BENZO(B)FLUORANTHENE	UG/KG-DRY	ND
06/16/92	MB*QC*0602	34245*CLP1	BENZO(K)FLUORANTHENE	UG/KG-DRY	ND
06/16/92	MB*QC*0602	34250*CLP1	BENZO(A)PYRENE	UG/KG-DRY	ND
06/16/92	MB*QC*0602	34406*CLP1	INDENO(1,2,3-CD) PYRENE	UG/KG-DRY	ND
06/16/92	MB*QC*0602	34559*CLP1	DIBEN(A,H)ANTHRACENE	UG/KG-DRY	ND
06/16/92	MB*QC*0602	34524*CLP1	BENZO(GHI)PERYLENE	UG/KG-DRY	ND

Standard Matrix Spike Recovery Summary

DATE	SAMPLE	STORET	PARAMETER	%RECV	RECV CRIT	UNITS	TARGET	FOUND
06/16/92	SP1*QC*1	34695*CLP1	PHENOL	115	26-90	UG/KG-DRY	13000	15000
06/16/92	SP1*QC*1	34589*CLP1	2-CHLOROPHENOL	115	25-102	UG/KG-DRY	13000	15000
06/16/92	SP1*QC*1	34574*CLP1	1,4-DICHLOROBENZENE	96	28-104	UG/KG-DRY	6700	6400
06/16/92	SP1*QC*1	34431*CLP1	N-NITROSODI-N-PROPYLAMINE	94	41-126	UG/KG-DRY	6700	6300
06/16/92	SP1*QC*1	34554*CLP1	1,2,4-TRICH'BENZENE	96	38-107	UG/KG-DRY	6700	6400
06/16/92	SP1*QC*1	34455*CLP1	4-CHLORO-3-METHYL PHENOL	115	26-103	UG/KG-DRY	13000	15000
06/16/92	SP1*QC*1	34208*CLP1	ACENAPHTHENE	122	31-137	UG/KG-DRY	6700	8200
06/16/92	SP1*QC*1	34649*CLP1	4-NITROPHENOL	146	11-114	UG/KG-DRY	13000	19000

EST BATCH : G28908

Standard Matrix Spike Recovery Summary

DATE	SAMPLE	STORET	PARAMETER	%RECV	RECV CRIT	UNITS	TARGET	FOUND
06/16/92	SP1*QC*1	34614*CLP1	2,4-DINITROTOLUENE	115	27.7-89.3	UG/KG-DRY	6700	7700
06/16/92	SP1*QC*1	39061*CLP1	PENTACHLPHENOL	100	17-109	UG/KG-DRY	13000	13000
06/16/92	SP1*QC*1	34472*CLP1	PYRENE	128	35-142	UG/KG-DRY	6700	8600

ple Matrix Spike Recovery Summary

DATE	SAMPLE	STORET	PARAMETER	%RECV	RECV CRIT	UNSPIKED	UNITS	TARGET	FOUND	RPD
06/16/92	SPM1*ALS2B*81	34695*CLP1	PHENOL	125	26-90	0.0	UG/KG-DRY	16000	20000	
06/16/92	SPM1*ALS2B*81	34589*CLP1	2-CHLOROPHENOL	106	25-102	0.0	UG/KG-DRY	16000	17000	
06/16/92	SPM1*ALS2B*81	34574*CLP1	1,4-DICHLOROBENZENE	94	28-104	0.0	UG/KG-DRY	8100	7600	
06/16/92	SPM1*ALS2B*81	34431*CLP1	N-NITROSODI-N-PROPYLAMINE	95	41-126	0.0	UG/KG-DRY	8100	7700	
06/16/92	SPM1*ALS2B*81	34554*CLP1	1,2,4-TRICH'BENZENE	94	38-107	0.0	UG/KG-DRY	8100	7600	
06/16/92	SPM1*ALS2B*81	34455*CLP1	4-CHLORO-3-METHYL PHENOL	113	26-103	0.0	UG/KG-DRY	16000	18000	
06/16/92	SPM1*ALS2B*81	34208*CLP1	ACENAPHTHENE	121	31-137	0.0	UG/KG-DRY	8100	9800	
06/16/92	SPM1*ALS2B*81	34649*CLP1	4-NITROPHENOL	106	11-114	0.0	UG/KG-DRY	16000	17000	
06/16/92	SPM1*ALS2B*81	34614*CLP1	2,4-DINITROTOLUENE	105	27.7-89.3	0.0	UG/KG-DRY	8100	8500	
06/16/92	SPM1*ALS2B*81	39061*CLP1	PENTACHLPHENOL	88	17-109	0.0	UG/KG-DRY	16000	14000	
06/16/92	SPM1*ALS2B*81	34472*CLP1	PYRENE	121	35-142	0.0	UG/KG-DRY	8100	9800	
06/16/92	SPM2*ALS2B*81	34695*CLP1	PHENOL	106	26-90	0.0	UG/KG-DRY	16000	17000	17
06/16/92	SPM2*ALS2B*81	34589*CLP1	2-CHLOROPHENOL	94	25-102	0.0	UG/KG-DRY	16000	15000	17
06/16/92	SPM2*ALS2B*81	34574*CLP1	1,4-DICHLOROBENZENE	89	28-104	0.0	UG/KG-DRY	8100	7200	5.5
06/16/92	SPM2*ALS2B*81	34431*CLP1	N-NITROSODI-N-PROPYLAMINE	88	41-126	0.0	UG/KG-DRY	8100	7100	7.7
06/16/92	SPM2*ALS2B*81	34554*CLP1	1,2,4-TRICH'BENZENE	90	38-107	0.0	UG/KG-DRY	8100	7300	4.3
06/16/92	SPM2*ALS2B*81	34455*CLP1	4-CHLORO-3-METHYL PHENOL	113	26-103	0.0	UG/KG-DRY	16000	18000	0.0
06/16/92	SPM2*ALS2B*81	34208*CLP1	ACENAPHTHENE	101	31-137	0.0	UG/KG-DRY	8100	8200	18
06/16/92	SPM2*ALS2B*81	34649*CLP1	4-NITROPHENOL	106	11-114	0.0	UG/KG-DRY	16000	17000	0.0
06/16/92	SPM2*ALS2B*81	34614*CLP1	2,4-DINITROTOLUENE	102	27.7-89.3	0.0	UG/KG-DRY	8100	8300	0.0
06/16/92	SPM2*ALS2B*81	39061*CLP1	PENTACHLPHENOL	88	17-109	0.0	UG/KG-DRY	16000	14000	1.1
06/16/92	SPM2*ALS2B*81	34472*CLP1	PYRENE	122	35-142	0.0	UG/KG-DRY	8100	9900	0.0

Surrogate Spike Recovery Summary

DATE	SAMPLE	STORET	PARAMETER	UNITS	TARGET	FOUND	%RECV	RECV CRIT
06/16/92	MB*QC*0602	98325*SUR	2-FLUOROPHENOL	UG/KG-DRY	6700	7200	110	25-121
06/16/92	MB*QC*0602	98326*SUR	PHENOL-D(5)	UG/KG-DRY	6670	6920	104	24-113
06/16/92	MB*QC*0602	98327*SUR	NITROBENZENE-D(5)	UG/KG-DRY	3300	3100	94	23-120
06/16/92	MB*QC*0602	98330*SUR	2-FLUOROBIPHENYL	UG/KG-DRY	3300	3300	100	30-115
06/16/92	MB*QC*0602	97448*SUR	2,4,6-TRIBROMOPHENOL	UG/KG	6670	7280	109	19-122
06/16/92	MB*QC*0602	97449*SUR	TERPHENYL-D(14)	UG/KG	3330	4260	128	18-137
'16/92	SP1*QC*1	98325*SUR	2-FLUOROPHENOL	UG/KG-DRY	6700	7300	110	25-121
16/92	SP1*QC*1	98326*SUR	PHENOL-D(5)	UG/KG-DRY	6670	7300	109	24-113
/16/92	SP1*QC*1	98327*SUR	NITROBENZENE-D(5)	UG/KG-DRY	3300	3300	100	23-120
06/16/92	SP1*QC*1	98330*SUR	2-FLUOROBIPHENYL	UG/KG-DRY	3300	3400	100	30-115
06/16/92	SP1*QC*1	97448*SUR	2,4,6-TRIBROMOPHENOL	UG/KG	6670	9850	148	19-122
06/16/92	SP1*QC*1	97449*SUR	TERPHENYL-D(14)	UG/KG	3330	4070	122	18-137
06/16/92	DA*ALS2B*43	98325*SUR	2-FLUOROPHENOL	UG/KG-DRY	6700	6800	100	25-121
06/16/92	DA*ALS2B*43	98326*SUR	PHENOL-D(5)	UG/KG-DRY	6670	6500	97.5	24-113
06/16/92	DA*ALS2B*43	98327*SUR	NITROBENZENE-D(5)	UG/KG-DRY	3300	3200	97	23-120
06/16/92	DA*ALS2B*43	98330*SUR	2-FLUOROBIPHENYL	UG/KG-DRY	3300	3400	100	30-115
06/16/92	DA*ALS2B*43	97448*SUR	2,4,6-TRIBROMOPHENOL	UG/KG	6670	8180	123	19-122
06/16/92	DA*ALS2B*43	97449*SUR	TERPHENYL-D(14)	UG/KG	3330	3810	114	18-137
06/17/92	DA*ALS2B*73	98325*SUR	2-FLUOROPHENOL	UG/KG-DRY	6700	5600	84	25-121
06/17/92	DA*ALS2B*73	98326*SUR	PHENOL-D(5)	UG/KG-DRY	6670	6350	95.2	24-113
06/17/92	DA*ALS2B*73	98327*SUR	NITROBENZENE-D(5)	UG/KG-DRY	3300	3000	91	23-120
06/17/92	DA*ALS2B*73	98330*SUR	2-FLUOROBIPHENYL	UG/KG-DRY	3300	2800	85	30-115
06/17/92	DA*ALS2B*73	97448*SUR	2,4,6-TRIBROMOPHENOL	UG/KG	6670	3590	53.8	19-122
06/17/92	DA*ALS2B*73	97449*SUR	TERPHENYL-D(14)	UG/KG	3330	2830	85.0	18-137
06/16/92	DA*ALS2B*74	98325*SUR	2-FLUOROPHENOL	UG/KG-DRY	6700	7000	100	25-121
06/16/92	DA*ALS2B*74	98326*SUR	PHENOL-D(5)	UG/KG-DRY	6670	7070	106	24-113
06/16/92	DA*ALS2B*74	98327*SUR	NITROBENZENE-D(5)	UG/KG-DRY	3300	3100	94	23-120
06/16/92	DA*ALS2B*74	98330*SUR	2-FLUOROBIPHENYL	UG/KG-DRY	3300	3200	97	30-115
06/16/92	DA*ALS2B*74	97448*SUR	2,4,6-TRIBROMOPHENOL	UG/KG	6670	8020	120	19-122
06/16/92	DA*ALS2B*74	97449*SUR	TERPHENYL-D(14)	UG/KG	3330	4390	132	18-137
06/16/92	DA*ALS2B*75	98325*SUR	2-FLUOROPHENOL	UG/KG-DRY	6700	6300	94	25-121
06/16/92	DA*ALS2B*75	98326*SUR	PHENOL-D(5)	UG/KG-DRY	6670	6120	91.8	24-113
06/16/92	DA*ALS2B*75	98327*SUR	NITROBENZENE-D(5)	UG/KG-DRY	3300	3100	94	23-120
06/16/92	DA*ALS2B*75	98330*SUR	2-FLUOROBIPHENYL	UG/KG-DRY	3300	3000	91	30-115
06/16/92	DA*ALS2B*75	97448*SUR	2,4,6-TRIBROMOPHENOL	UG/KG	6670	6300	94.5	19-122
06/16/92	DA*ALS2B*75	97449*SUR	TERPHENYL-D(14)	UG/KG	3330	3940	118	18-137
06/17/92	DA*ALS2B*76	98325*SUR	2-FLUOROPHENOL	UG/KG-DRY	6700	7300	110	25-121
06/17/92	DA*ALS2B*76	98326*SUR	PHENOL-D(5)	UG/KG-DRY	6670	6680	100	24-113
06/17/92	DA*ALS2B*76	98327*SUR	NITROBENZENE-D(5)	UG/KG-DRY	3300	2700	82	23-120
06/17/92	DA*ALS2B*76	98330*SUR	2-FLUOROBIPHENYL	UG/KG-DRY	3300	2800	85	30-115
06/17/92	DA*ALS2B*76	97448*SUR	2,4,6-TRIBROMOPHENOL	UG/KG	6670	7310	110	19-122
'17/92	DA*ALS2B*76	97449*SUR	TERPHENYL-D(14)	UG/KG	3330	4000	120	18-137
:7/92	DA*ALS2B*77	98325*SUR	2-FLUOROPHENOL	UG/KG-DRY	6700	6900	100	25-121
17/92	DA*ALS2B*77	98326*SUR	PHENOL-D(5)	UG/KG-DRY	6670	6670	100.0	24-113

ESE BATCH : G28908

Surrogate Spike Recovery Summary

DATE	SAMPLE	STORET	PARAMETER	UNITS	TARGET	FOUND	%RECV	RECV CRIT
06/17/92	DA*ALS2B*77	98327*SUR	NITROBENZENE-D(5)	UG/KG-DRY	3300	3300	100	23-120
06/17/92	DA*ALS2B*77	98330*SUR	2-FLUOROBIPHENYL	UG/KG-DRY	3300	3500	110	30-115
06/17/92	DA*ALS2B*77	97448*SUR	2,4,6-TRIBROMOPHENOL	UG/KG	6670	7440	112	19-122
06/17/92	DA*ALS2B*77	97449*SUR	TERPHENYL-D(14)	UG/KG	3330	3410	102	18-137
06/17/92	DA*ALS2B*78	98325*SUR	2-FLUOROPHENOL	UG/KG-DRY	6700	5000	75	25-121
06/17/92	DA*ALS2B*78	98326*SUR	PHENOL-D(5)	UG/KG-DRY	6670	5230	78.4	24-113
06/17/92	DA*ALS2B*78	98327*SUR	NITROBENZENE-D(5)	UG/KG-DRY	3300	2100	64	23-120
06/17/92	DA*ALS2B*78	98330*SUR	2-FLUOROBIPHENYL	UG/KG-DRY	3300	2400	73	30-115
06/17/92	DA*ALS2B*78	97448*SUR	2,4,6-TRIBROMOPHENOL	UG/KG	6670	5840	87.6	19-122
06/17/92	DA*ALS2B*78	97449*SUR	TERPHENYL-D(14)	UG/KG	3330	3140	94.3	18-137
06/17/92	DA*ALS2B*79	98325*SUR	2-FLUOROPHENOL	UG/KG-DRY	6700	7100	110	25-121
06/17/92	DA*ALS2B*79	98326*SUR	PHENOL-D(5)	UG/KG-DRY	6670	7420	111	24-113
06/17/92	DA*ALS2B*79	98327*SUR	NITROBENZENE-D(5)	UG/KG-DRY	3300	3200	97	23-120
06/17/92	DA*ALS2B*79	98330*SUR	2-FLUOROBIPHENYL	UG/KG-DRY	3300	3100	94	30-115
06/17/92	DA*ALS2B*79	97448*SUR	2,4,6-TRIBROMOPHENOL	UG/KG	6670	6450	96.7	19-122
06/17/92	DA*ALS2B*79	97449*SUR	TERPHENYL-D(14)	UG/KG	3330	3820	115	18-137
06/17/92	DA*ALS2B*80	98325*SUR	2-FLUOROPHENOL	UG/KG-DRY	6700	6800	100	25-121
06/17/92	DA*ALS2B*80	98326*SUR	PHENOL-D(5)	UG/KG-DRY	6670	7380	111	24-113
06/17/92	DA*ALS2B*80	98327*SUR	NITROBENZENE-D(5)	UG/KG-DRY	3300	3000	91	23-120
06/17/92	DA*ALS2B*80	98330*SUR	2-FLUOROBIPHENYL	UG/KG-DRY	3300	2700	82	30-115
06/17/92	DA*ALS2B*80	97448*SUR	2,4,6-TRIBROMOPHENOL	UG/KG	6670	5780	86.7	19-122
06/17/92	DA*ALS2B*80	97449*SUR	TERPHENYL-D(14)	UG/KG	3330	3590	108	18-137
06/17/92	DA*ALS2B*81	98325*SUR	2-FLUOROPHENOL	UG/KG-DRY	6700	6300	94	25-121
06/17/92	DA*ALS2B*81	98326*SUR	PHENOL-D(5)	UG/KG-DRY	6670	6720	101	24-113
06/17/92	DA*ALS2B*81	98327*SUR	NITROBENZENE-D(5)	UG/KG-DRY	3300	2900	88	23-120
06/17/92	DA*ALS2B*81	98330*SUR	2-FLUOROBIPHENYL	UG/KG-DRY	3300	2400	73	30-115
06/17/92	DA*ALS2B*81	97448*SUR	2,4,6-TRIBROMOPHENOL	UG/KG	6670	4850	72.7	19-122
06/17/92	DA*ALS2B*81	97449*SUR	TERPHENYL-D(14)	UG/KG	3330	3750	113	18-137
06/17/92	DA*ALS2B*83	98325*SUR	2-FLUOROPHENOL	UG/KG-DRY	6700	6800	100	25-121
06/17/92	DA*ALS2B*83	98326*SUR	PHENOL-D(5)	UG/KG-DRY	6670	6830	102	24-113
06/17/92	DA*ALS2B*83	98327*SUR	NITROBENZENE-D(5)	UG/KG-DRY	3300	2900	88	23-120
06/17/92	DA*ALS2B*83	98330*SUR	2-FLUOROBIPHENYL	UG/KG-DRY	3300	2900	88	30-115
06/17/92	DA*ALS2B*83	97448*SUR	2,4,6-TRIBROMOPHENOL	UG/KG	6670	6510	97.6	19-122
06/17/92	DA*ALS2B*83	97449*SUR	TERPHENYL-D(14)	UG/KG	3330	3840	115	18-137
06/17/92	DA*ALS2B*84	98325*SUR	2-FLUOROPHENOL	UG/KG-DRY	6700	7400	110	25-121
06/17/92	DA*ALS2B*84	98326*SUR	PHENOL-D(5)	UG/KG-DRY	6670	7780	117	24-113
06/17/92	DA*ALS2B*84	98327*SUR	NITROBENZENE-D(5)	UG/KG-DRY	3300	3500	110	23-120
06/17/92	DA*ALS2B*84	98330*SUR	2-FLUOROBIPHENYL	UG/KG-DRY	3300	3000	91	30-115
06/17/92	DA*ALS2B*84	97448*SUR	2,4,6-TRIBROMOPHENOL	UG/KG	6670	7130	107	19-122
06/17/92	DA*ALS2B*84	97449*SUR	TERPHENYL-D(14)	UG/KG	3330	3720	112	18-137
06/17/92	DA*ALS2B*85	98325*SUR	2-FLUOROPHENOL	UG/KG-DRY	6700	7400	110	25-121
06/17/92	DA*ALS2B*85	98326*SUR	PHENOL-D(5)	UG/KG-DRY	6670	6990	105	24-113
06/17/92	DA*ALS2B*85	98327*SUR	NITROBENZENE-D(5)	UG/KG-DRY	3300	3000	91	23-120
06/17/92	DA*ALS2B*85	98330*SUR	2-FLUOROBIPHENYL	UG/KG-DRY	3300	2900	88	30-115
06/17/92	DA*ALS2B*85	97448*SUR	2,4,6-TRIBROMOPHENOL	UG/KG	6670	7240	109	19-122
06/17/92	DA*ALS2B*85	97449*SUR	TERPHENYL-D(14)	UG/KG	3330	3640	109	18-137
06/17/92	DA*ALS2B*86	98325*SUR	2-FLUOROPHENOL	UG/KG-DRY	6700	6900	100	25-121
06/17/92	DA*ALS2B*86	98326*SUR	PHENOL-D(5)	UG/KG-DRY	6670	7210	108	24-113
06/17/92	DA*ALS2B*86	98327*SUR	NITROBENZENE-D(5)	UG/KG-DRY	3300	3000	91	23-120
06/17/92	DA*ALS2B*86	98330*SUR	2-FLUOROBIPHENYL	UG/KG-DRY	3300	2600	79	30-115
06/17/92	DA*ALS2B*86	97448*SUR	2,4,6-TRIBROMOPHENOL	UG/KG	6670	6200	93.0	19-122
06/17/92	DA*ALS2B*86	97449*SUR	TERPHENYL-D(14)	UG/KG	3330	3850	116	18-137
06/17/92	SPM1*ALS2B*81	98325*SUR	2-FLUOROPHENOL	UG/KG-DRY	6700	7400	110	25-121
06/17/92	SPM1*ALS2B*81	98326*SUR	PHENOL-D(5)	UG/KG-DRY	6670	7460	112	24-113
06/17/92	SPM1*ALS2B*81	98327*SUR	NITROBENZENE-D(5)	UG/KG-DRY	3300	3300	100	23-120
06/17/92	SPM1*ALS2B*81	98330*SUR	2-FLUOROBIPHENYL	UG/KG-DRY	3300	3200	97	30-115
06/17/92	SPM1*ALS2B*81	97448*SUR	2,4,6-TRIBROMOPHENOL	UG/KG	6670	7770	116	19-122
06/17/92	SPM1*ALS2B*81	97449*SUR	TERPHENYL-D(14)	UG/KG	3330	3520	106	18-137
06/17/92	SPM2*ALS2B*81	98325*SUR	2-FLUOROPHENOL	UG/KG-DRY	6700	6500	97	25-121
06/17/92	SPM2*ALS2B*81	98326*SUR	PHENOL-D(5)	UG/KG-DRY	6670	7090	106	24-113
06/17/92	SPM2*ALS2B*81	98327*SUR	NITROBENZENE-D(5)	UG/KG-DRY	3300	3300	100	23-120
06/17/92	SPM2*ALS2B*81	98330*SUR	2-FLUOROBIPHENYL	UG/KG-DRY	3300	2700	82	30-115
06/17/92	SPM2*ALS2B*81	97448*SUR	2,4,6-TRIBROMOPHENOL	UG/KG	6670	7770	116	19-122
06/17/92	SPM2*ALS2B*81	97449*SUR	TERPHENYL-D(14)	UG/KG	3330	3550	107	18-137

ESE BATCH : G28908

Environmental Science and Engineering Analytical Services
Computer QC Checks

Batch No.: G28908 Analysis Date: 06/16/92 Analyst: CAROLYN DIAZ

	Yes	"Exceptions" No	Comment / Corrective Action
Analysis holding time within criteria?	X		
Extract holding time within criteria?	X		
Method blank present?	X		
Method blank within acceptance criteria?	X		
Sample matrix spike present?	X		
Sample matrix spike within acceptance criteria?		X	34695*CLP1 34589*CLP1 34455*CLP1 34614*CLP1
Sample matrix spike duplicate present?	X		
Sample matrix spike duplicate within acceptance criteria?		X	34695*CLP1 34455*CLP1 34614*CLP1
Surrogate present?	X		
Surrogate within acceptance criteria?		X	98326*SUR 97448*SUR

Note: Any "NO" answer requires a comment.

OVERRIDE COMMENTS

PROB:SAMPLE MATRIX SPIKE NOT WITHIN
ACCEPTANCE CRITERIA.
EXPL:FOLLOWING CLP SOW 2/88 RECOVERY
RANGES FOR MATRIX SPIKE COM-
POUNDS ARE ONLY ADVISORY AND
FALLING OUTSIDE THESE RANGES
DOES NOT INITIATE RE-ANALYSIS. CSD/6/22/92

PROB:SAMPLE MATRIX SPIKE DUPLICATE
NOT WITHIN ACCEPTANCE CRITERIA.
EXPL:SEE ABOVE.CSD/6/22/92

PROB:SURROGATE NOT WITHIN ACCEPTANCE
CRITERIA.
EXPL:FOLLOWING CLP SOW ONE ACID AND
ONE BASE-NEUTRAL MAY FALL OUTSIDE
RECOVERY RANGE WITHOUT INITIATING
RE-ANALYSIS.

ESE BATCH : G28961
CLASSIFICATION : ACID EXTR - CLP SOW 2/88

STATUS : FINAL

METHOD BLANK CORRECTION METHOD : NONE

FIELD GRP	PROJECT NUMBER	PROJECT NAME	LAB COORDINATOR
ALS2B	3914042 0201	JMM/ALAMEDA CTO-121	JACKIE HARGROVE-ELLI

SAMPLE CODE	CLIENT ID	DATE ANALYZED	TIME ANALYZED
ALS2B*71	B-05WT-01	06/18/92	10:58AM
ALS2B*72	B-05WT-02	06/18/92	11:50AM
ALS2B*82	B-05BS-02	06/18/92	12:42PM

ESE BATCH : G28961

Method Blank Sample Summary

DATE	SAMPLE	STORET	PARAMETER	UNITS	FOUND
06/18/92	MB*QC*1	34695*CLP1	PHENOL	UG/KG-DRY	ND
06/18/92	MB*QC*1	34276*CLP1	BIS(2-CHLOROETHYL) ETHER	UG/KG-DRY	ND
18/92	MB*QC*1	34589*CLP1	2-CHLOROPHENOL	UG/KG-DRY	ND
.8/92	MB*QC*1	34569*CLP1	1,3-DICHLOROBENZENE	UG/KG-DRY	ND
06/18/92	MB*QC*1	34574*CLP1	1,4-DICHLOROBENZENE	UG/KG-DRY	ND
06/18/92	MB*QC*1	34539*CLP1	1,2-DICHLOROBENZENE	UG/KG-DRY	ND
06/18/92	MB*QC*1	75212*CLP1	BENZYL ALCOHOL	UG/KG-DRY	ND
06/18/92	MB*QC*1	78872*CLP1	2-METHYLPHENOL	UG/KG-DRY	ND
06/18/92	MB*QC*1	78803*CLP1	4-METHYLPHENOL	UG/KG-DRY	ND
06/18/92	MB*QC*1	34286*CLP1	BIS(2-CHL'ISOPROPYL) ETHER	UG/KG-DRY	ND
06/18/92	MB*QC*1	34431*CLP1	N-NITROSODI-N-PROPYLAMINE	UG/KG-DRY	ND
06/18/92	MB*QC*1	34399*CLP1	HEXACHLOROETHANE	UG/KG-DRY	ND
06/18/92	MB*QC*1	34450*CLP1	NITROBENZENE	UG/KG-DRY	ND
06/18/92	MB*QC*1	34411*CLP1	ISOPHORONE	UG/KG-DRY	ND
06/18/92	MB*QC*1	34594*CLP1	2-NITROPHENOL	UG/KG-DRY	ND
06/18/92	MB*QC*1	34609*CLP1	2,4-DIMETHYLPHENOL	UG/KG-DRY	ND
06/18/92	MB*QC*1	75315*CLP1	BENZOIC ACID	UG/KG-DRY	ND
06/18/92	MB*QC*1	34281*CLP1	BIS(2-CHLOROETHOXY) METHANE	UG/KG-DRY	ND
06/18/92	MB*QC*1	34604*CLP1	2,4-DICHLOROPHENOL	UG/KG-DRY	ND
06/18/92	MB*QC*1	34554*CLP1	1,2,4-TRICH'BENZENE	UG/KG-DRY	ND
06/18/92	MB*QC*1	34445*CLP1	NAPHTHALENE	UG/KG-DRY	ND
06/18/92	MB*QC*1	78867*CLP1	4-CHLOROANILINE	UG/KG-DRY	ND
06/18/92	MB*QC*1	39705*CLP1	HEXACHLOROBUTADIENE	UG/KG-DRY	ND
06/18/92	MB*QC*1	34455*CLP1	4-CHLORO-3-METHYL PHENOL	UG/KG-DRY	ND
06/18/92	MB*QC*1	78868*CLP1	2-METHYLNAPHTHALENE	UG/KG-DRY	ND
06/18/92	MB*QC*1	34389*CLP1	HEXACHLOROCYCLOPENTADIENE	UG/KG-DRY	ND
06/18/92	MB*QC*1	34624*CLP1	2,4,6-TRICH'PHENOL	UG/KG-DRY	ND
06/18/92	MB*QC*1	98587*CLP1	2,4,5-TRICH'PHENOL	UG/KG-DRY	ND
06/18/92	MB*QC*1	34584*CLP1	2-CHLORONAPHTHALENE	UG/KG-DRY	ND
06/18/92	MB*QC*1	98588*CLP1	2-NITROANILINE	UG/KG-DRY	ND
06/18/92	MB*QC*1	34344*CLP1	DIMETHYL PHTHALATE	UG/KG-DRY	ND
06/18/92	MB*QC*1	34203*CLP1	ACENAPHTHYLENE	UG/KG-DRY	ND
06/18/92	MB*QC*1	34629*CLP1	2,6-DINITROTOLUENE	UG/KG-DRY	ND
06/18/92	MB*QC*1	78869*CLP1	3-NITROANILINE	UG/KG-DRY	ND
06/18/92	MB*QC*1	34208*CLP1	ACENAPHTHENE	UG/KG-DRY	ND
06/18/92	MB*QC*1	34619*CLP1	2,4-DINITROPHENOL	UG/KG-DRY	ND
06/18/92	MB*QC*1	34649*CLP1	4-NITROPHENOL	UG/KG-DRY	ND
'8/92	MB*QC*1	75647*CLP1	DIBENZOFURAN	UG/KG-DRY	ND
8/92	MB*QC*1	34614*CLP1	2,4-DINITROTOLUENE	UG/KG-DRY	ND
.8/92	MB*QC*1	34339*CLP1	DIETHYL PHTHALATE	UG/KG-DRY	ND
06/18/92	MB*QC*1	34644*CLP1	4-CHLOROPHENYLPHENYL ETHER	UG/KG-DRY	ND
06/18/92	MB*QC*1	34384*CLP1	FLUORENE	UG/KG-DRY	ND
06/18/92	MB*QC*1	78870*CLP1	4-NITROANILINE	UG/KG-DRY	ND
06/18/92	MB*QC*1	34436*CLP1	N-NITROSODIPHE'AMINE	UG/KG-DRY	ND
06/18/92	MB*QC*1	34660*CLP1	2-METHYL-4,6-DINITROPHENOL	UG/KG-DRY	ND
06/18/92	MB*QC*1	34639*CLP1	4-BROMOPHENYL PHENYL ETHER	UG/KG-DRY	ND
06/18/92	MB*QC*1	39701*CLP1	HEXACHLOROBENZENE	UG/KG-DRY	ND
06/18/92	MB*QC*1	39061*CLP1	PENTACHLPHENOL	UG/KG-DRY	ND
06/18/92	MB*QC*1	34464*CLP1	PHENANTHRENE	UG/KG-DRY	ND
06/18/92	MB*QC*1	34223*CLP1	ANTHRACENE	UG/KG-DRY	ND
06/18/92	MB*QC*1	39112*CLP1	DI-N-BUTYL PHTHALATE	UG/KG-DRY	ND
06/18/92	MB*QC*1	34379*CLP1	FLUORANTHENE	UG/KG-DRY	ND
06/18/92	MB*QC*1	34472*CLP1	PYRENE	UG/KG-DRY	ND
06/18/92	MB*QC*1	34295*CLP1	BUTYLBENZYLPHTHALATE	UG/KG-DRY	ND
06/18/92	MB*QC*1	34634*CLP1	3,3-DICHL'BENZIDINE	UG/KG-DRY	ND
06/18/92	MB*QC*1	34529*CLP1	BENZO(A)ANTHRACENE	UG/KG-DRY	ND
06/18/92	MB*QC*1	34323*CLP1	CHRYSENE	UG/KG-DRY	ND
06/18/92	MB*QC*1	39102*CLP1	BIS(2-ETHYLHEXYL) PHTHALATE	UG/KG-DRY	160
06/18/92	MB*QC*1	34599*CLP1	DI-N-OCTYL PHTHALATE	UG/KG-DRY	ND
06/18/92	MB*QC*1	34233*CLP1	BENZO(B)FLUORANTHENE	UG/KG-DRY	ND
06/18/92	MB*QC*1	34245*CLP1	BENZO(K)FLUORANTHENE	UG/KG-DRY	ND
06/18/92	MB*QC*1	34250*CLP1	BENZO(A)PYRENE	UG/KG-DRY	ND
06/18/92	MB*QC*1	34406*CLP1	INDENO(1,2,3-CD) PYRENE	UG/KG-DRY	ND
06/18/92	MB*QC*1	34559*CLP1	DIBEN(A,H)ANTHRACENE	UG/KG-DRY	ND
06/18/92	MB*QC*1	34524*CLP1	BENZO(GHI)PERYLENE	UG/KG-DRY	ND

Standard Matrix Spike Recovery Summary

DATE	SAMPLE	STORET	PARAMETER	%RECV	RECV CRIT	UNITS	TARGET	FOUND
06/18/92	SP1*QC*1	34695*CLP1	PHENOL	85	26-90	UG/KG-DRY	13000	11000
06/18/92	SP1*QC*1	34589*CLP1	2-CHLOROPHENOL	85	25-102	UG/KG-DRY	13000	11000
06/18/92	SP1*QC*1	34574*CLP1	1,4-DICHLOROBENZENE	93	28-104	UG/KG-DRY	6700	6200
'8/92	SP1*QC*1	34431*CLP1	N-NITROSODI-N-PROPYLAMINE	76	41-126	UG/KG-DRY	6700	5100
/92	SP1*QC*1	34554*CLP1	1,2,4-TRICH'BENZENE	97	38-107	UG/KG-DRY	6700	6500
8/92	SP1*QC*1	34455*CLP1	4-CHLORO-3-METHYL PHENOL	108	26-103	UG/KG-DRY	13000	14000
06/18/92	SP1*QC*1	34208*CLP1	ACENAPHTHENE	90	31-137	UG/KG-DRY	6700	6000
06/18/92	SP1*QC*1	34649*CLP1	4-NITROPHENOL	92	11-114	UG/KG-DRY	13000	12000

Standard Matrix Spike Recovery Summary

DATE	SAMPLE	STORET	PARAMETER	%RECV	RECV CRIT	UNITS	TARGET	FOUND
06/18/92	SP1*QC*1	34614*CLP1	2,4-DINITROTOLUENE	101	27.7-89.3	UG/KG-DRY	6700	6800
06/18/92	SP1*QC*1	39061*CLP1	PENTACHLPHENOL	100	17-109	UG/KG-DRY	13000	13000
06/18/92	SP1*QC*1	34472*CLP1	PYRENE	85	35-142	UG/KG-DRY	6700	5700

Sample Matrix Spike Recovery Summary

DATE	SAMPLE	STORET	PARAMETER	%RECV	RECV CRIT	UNSPIKED	UNITS	TARGET	FOUND	RPD
06/18/92	SPM1*ALS2B*82	34695*CLP1	PHENOL	86	26-90	0.0	UG/KG-DRY	14000	12000	
06/18/92	SPM1*ALS2B*82	34589*CLP1	2-CHLOROPHENOL	79	25-102	0.0	UG/KG-DRY	14000	11000	
06/18/92	SPM1*ALS2B*82	34574*CLP1	1,4-DICHLOROBENZENE	90	28-104	0.0	UG/KG-DRY	7200	6500	
06/18/92	SPM1*ALS2B*82	34431*CLP1	N-NITROSODI-N-PROPYLAMINE	75	41-126	0.0	UG/KG-DRY	7200	5400	
06/18/92	SPM1*ALS2B*82	34554*CLP1	1,2,4-TRICH'BENZENE	97	38-107	0.0	UG/KG-DRY	7200	7000	
06/18/92	SPM1*ALS2B*82	34455*CLP1	4-CHLORO-3-METHYL PHENOL	100	26-103	0.0	UG/KG-DRY	14000	14000	
06/18/92	SPM1*ALS2B*82	34208*CLP1	ACENAPHTHENE	89	31-137	0.0	UG/KG-DRY	7200	6400	
06/18/92	SPM1*ALS2B*82	34649*CLP1	4-NITROPHENOL	93	11-114	0.0	UG/KG-DRY	14000	13000	
06/18/92	SPM1*ALS2B*82	34614*CLP1	2,4-DINITROTOLUENE	108	27.7-89.3	0.0	UG/KG-DRY	7200	7800	
06/18/92	SPM1*ALS2B*82	39061*CLP1	PENTACHLPHENOL	100	17-109	0.0	UG/KG-DRY	14000	14000	
06/18/92	SPM1*ALS2B*82	34472*CLP1	PYRENE	83	35-142	0.0	UG/KG-DRY	7200	6000	
06/18/92	SPM2*ALS2B*82	34695*CLP1	PHENOL	86	26-90	0.0	UG/KG-DRY	14000	12000	3.6
06/18/92	SPM2*ALS2B*82	34589*CLP1	2-CHLOROPHENOL	86	25-102	0.0	UG/KG-DRY	14000	12000	4.9
06/18/92	SPM2*ALS2B*82	34574*CLP1	1,4-DICHLOROBENZENE	96	28-104	0.0	UG/KG-DRY	7200	6900	6.5
06/18/92	SPM2*ALS2B*82	34431*CLP1	N-NITROSODI-N-PROPYLAMINE	75	41-126	0.0	UG/KG-DRY	7200	5400	0.0
06/18/92	SPM2*ALS2B*82	34554*CLP1	1,2,4-TRICH'BENZENE	100	38-107	0.0	UG/KG-DRY	7200	7200	3.0
06/18/92	SPM2*ALS2B*82	34455*CLP1	4-CHLORO-3-METHYL PHENOL	93	26-103	0.0	UG/KG-DRY	14000	13000	11
06/18/92	SPM2*ALS2B*82	34208*CLP1	ACENAPHTHENE	94	31-137	0.0	UG/KG-DRY	7200	6800	5.5
06/18/92	SPM2*ALS2B*82	34649*CLP1	4-NITROPHENOL	100	11-114	0.0	UG/KG-DRY	14000	14000	4.2
06/18/92	SPM2*ALS2B*82	34614*CLP1	2,4-DINITROTOLUENE	117	27.7-89.3	0.0	UG/KG-DRY	7200	8400	8.7
06/18/92	SPM2*ALS2B*82	39061*CLP1	PENTACHLPHENOL	107	17-109	0.0	UG/KG-DRY	14000	15000	0.0
06/18/92	SPM2*ALS2B*82	34472*CLP1	PYRENE	86	35-142	0.0	UG/KG-DRY	7200	6200	3.6

Surrogate Spike Recovery Summary

DATE	SAMPLE	STORET	PARAMETER	UNITS	TARGET	FOUND	%RECV	RECV CRIT
06/18/92	MB*QC*1	98325*SUR	2-FLUOROPHENOL	UG/KG-DRY	6700	6400	96	25-121
06/18/92	MB*QC*1	98326*SUR	PHENOL-D(5)	UG/KG-DRY	6670	5360	80.4	24-113
06/18/92	MB*QC*1	98327*SUR	NITROBENZENE-D(5)	UG/KG-DRY	3300	2800	85	23-120
06/18/92	MB*QC*1	98330*SUR	2-FLUOROBIPHENYL	UG/KG-DRY	3300	2900	88	30-115
06/18/92	MB*QC*1	97448*SUR	2,4,6-TRIBROMOPHENOL	UG/KG	6670	5390	80.8	19-122
06/18/92	MB*QC*1	97449*SUR	TERPHENYL-D(14)	UG/KG	3330	2780	83.5	18-137
06/18/92	DA*ALS2B*71	98325*SUR	2-FLUOROPHENOL	UG/KG-DRY	6700	6100	91	25-121
06/18/92	DA*ALS2B*71	98326*SUR	PHENOL-D(5)	UG/KG-DRY	6670	5500	82.5	24-113
06/18/92	DA*ALS2B*71	98327*SUR	NITROBENZENE-D(5)	UG/KG-DRY	3300	3000	91	23-120
06/18/92	DA*ALS2B*71	98330*SUR	2-FLUOROBIPHENYL	UG/KG-DRY	3300	2900	88	30-115
06/18/92	DA*ALS2B*71	97448*SUR	2,4,6-TRIBROMOPHENOL	UG/KG	6670	6180	92.7	19-122
06/18/92	DA*ALS2B*71	97449*SUR	TERPHENYL-D(14)	UG/KG	3330	2680	80.5	18-137
06/18/92	DA*ALS2B*72	98325*SUR	2-FLUOROPHENOL	UG/KG-DRY	6700	5800	87	25-121
06/18/92	DA*ALS2B*72	98326*SUR	PHENOL-D(5)	UG/KG-DRY	6670	5040	75.6	24-113
06/18/92	DA*ALS2B*72	98327*SUR	NITROBENZENE-D(5)	UG/KG-DRY	3300	2500	76	23-120
06/18/92	DA*ALS2B*72	98330*SUR	2-FLUOROBIPHENYL	UG/KG-DRY	3300	2600	79	30-115
06/18/92	DA*ALS2B*72	97448*SUR	2,4,6-TRIBROMOPHENOL	UG/KG	6670	5160	77.4	19-122
06/18/92	DA*ALS2B*72	97449*SUR	TERPHENYL-D(14)	UG/KG	3330	2630	79.0	18-137
06/18/92	DA*ALS2B*82	98325*SUR	2-FLUOROPHENOL	UG/KG-DRY	6700	5400	81	25-121
06/18/92	DA*ALS2B*82	98326*SUR	PHENOL-D(5)	UG/KG-DRY	6670	4820	72.3	24-113
06/18/92	DA*ALS2B*82	98327*SUR	NITROBENZENE-D(5)	UG/KG-DRY	3300	2500	76	23-120
06/18/92	DA*ALS2B*82	98330*SUR	2-FLUOROBIPHENYL	UG/KG-DRY	3300	2400	73	30-115
06/18/92	DA*ALS2B*82	97448*SUR	2,4,6-TRIBROMOPHENOL	UG/KG	6670	4680	70.2	19-122
06/18/92	DA*ALS2B*82	97449*SUR	TERPHENYL-D(14)	UG/KG	3330	2590	77.8	18-137
06/18/92	SP1*QC*1	98325*SUR	2-FLUOROPHENOL	UG/KG-DRY	6700	6000	90	25-121
06/18/92	SP1*QC*1	98326*SUR	PHENOL-D(5)	UG/KG-DRY	6670	6340	95.1	24-113
06/18/92	SP1*QC*1	98327*SUR	NITROBENZENE-D(5)	UG/KG-DRY	3300	2800	85	23-120
06/18/92	SP1*QC*1	98330*SUR	2-FLUOROBIPHENYL	UG/KG-DRY	3300	2800	85	30-115
06/18/92	SP1*QC*1	97448*SUR	2,4,6-TRIBROMOPHENOL	UG/KG	6670	6510	97.6	19-122
06/18/92	SP1*QC*1	97449*SUR	TERPHENYL-D(14)	UG/KG	3330	2810	84.4	18-137
06/18/92	SPM1*ALS2B*82	98325*SUR	2-FLUOROPHENOL	UG/KG-DRY	6700	6000	90	25-121
06/18/92	SPM1*ALS2B*82	98326*SUR	PHENOL-D(5)	UG/KG-DRY	6670	6190	92.8	24-113
06/18/92	SPM1*ALS2B*82	98327*SUR	NITROBENZENE-D(5)	UG/KG-DRY	3300	2800	85	23-120
06/18/92	SPM1*ALS2B*82	98330*SUR	2-FLUOROBIPHENYL	UG/KG-DRY	3300	2800	85	30-115
06/18/92	SPM1*ALS2B*82	97448*SUR	2,4,6-TRIBROMOPHENOL	UG/KG	6670	6500	97.5	19-122
06/18/92	SPM1*ALS2B*82	97449*SUR	TERPHENYL-D(14)	UG/KG	3330	2870	86.2	18-137
06/18/92	SPM2*ALS2B*82	98325*SUR	2-FLUOROPHENOL	UG/KG-DRY	6700	6200	93	25-121
06/18/92	SPM2*ALS2B*82	98326*SUR	PHENOL-D(5)	UG/KG-DRY	6670	6340	95.1	24-113
06/18/92	SPM2*ALS2B*82	98327*SUR	NITROBENZENE-D(5)	UG/KG-DRY	3300	2800	85	23-120
06/18/92	SPM2*ALS2B*82	98330*SUR	2-FLUOROBIPHENYL	UG/KG-DRY	3300	3000	91	30-115
06/18/92	SPM2*ALS2B*82	97448*SUR	2,4,6-TRIBROMOPHENOL	UG/KG	6670	6840	103	19-122
06/18/92	SPM2*ALS2B*82	97449*SUR	TERPHENYL-D(14)	UG/KG	3330	2810	84.4	18-137

ESE BATCH : G28961

Environmental Science and Engineering Analytical Services
Computer QC Checks

Batch No.: G28961 Analysis Date: 06/18/92 Analyst: SCOTT KEERAN

	Yes	"Exceptions" No	Comment / Corrective Action
Analysis holding time within criteria?	X		
ract holding time within criteria?	X		
Method blank present?	X		
Method blank within acceptance criteria?	X		
Sample matrix spike present?	X		
Sample matrix spike within acceptance criteria?		X	34614*CLP1
Sample matrix spike duplicate present?	X		
Sample matrix spike duplicate within acceptance criteria?		X	34614*CLP1
Surrogate present?	X		
Surrogate within acceptance criteria?	X		

Note: Any "NO" answer requires a comment.

OVERRIDE COMMENTS

PROB:SAMPLE MATRIX SPIKE NOT WITHIN
ACCEPTANCE CRITERIA.
EXPL:THE 2,4DNT RECOVERY FOR SPM1
AND SPM2 WERE 108.0 AND 116.41%
WITH AN UPPER LIMIT OF 89.3%.
THE PRESENT RECOVERY IS WITHIN
THE RANGE OF HISTRIC DATA./SK/6/23/92

PROB:SAMPLE MATRIX SPIKE DUPLICATE NOT
WITHIN ACCEPTANCE CRITERIA.
EXPL:SEE ABOVE.

Organochlorine Pesticides & PCBs

ESE BATCH : G28907
CLASSIFICATION : CHL. PESTS - CLP SOW 2/88

STATUS : FINAL

METHOD BLANK CORRECTION METHOD : NONE

FIELD GRP	PROJECT NUMBER	PROJECT NAME	LAB COORDINATOR
ALS2B	3914042 0201	JMM/ALAMEDA CTO-121	JACKIE HARGROVE-ELLI

SAMPLE CODE	CLIENT ID	DATE ANALYZED	TIME ANALYZED
ALS2B*32	M-BG2	06/17/92	04:42AM
ALS2B*33	M-BG2	06/17/92	05:41AM
ALS2B*34	M-BG2	06/17/92	06:41AM
ALS2B*30	M-BG1	06/17/92	07:40AM
ALS2B*35	M-BG3	06/17/92	09:39AM
ALS2B*36	M-BG3	06/17/92	10:39AM
ALS2B*37	M-BG3	06/17/92	11:39AM
ALS2B*38	M-BG3	06/17/92	12:38PM
ALS2B*39	M-BG4	06/17/92	01:38PM
ALS2B*41	M-BG4	06/17/92	03:37PM
ALS2B*40	M-BG4	06/17/92	03:37PM
ALS2B*42	M-BG4	06/17/92	05:37PM
ALS2B*43	BG-DUP1	06/17/92	06:36PM
ALS2B*31	M-BG2	06/17/92	07:36PM
ALS2B*29	M-BG1	06/17/92	09:35PM
ALS2B*28	M-BG1	06/17/92	10:35PM
ALS2B*27	M-BG1	06/17/92	11:34PM

ESE BATCH : G28907

Continuing Calibration Verification Sample Summary

DATE	SAMPLE	STORET	PARAMETER	UNITS	TARGET	FOUND	%RECV	RECV CRIT
06/15/92	CCS*EVALB*1	39076*CLP	alpha-BHC	UG/KG-DRY		ND		80-120
06/15/92	CCS*EVALB*1	39783*CLP	gamma-BHC (Lindane)	UG/KG-DRY		ND		80-120
/15/92	CCS*EVALB*1	34257*CLP	beta-BHC	UG/KG-DRY		ND		80-120
'15/92	CCS*EVALB*1	39413*CLP	Heptachlor	UG/KG-DRY		ND		80-120
6/15/92	CCS*EVALB*1	34262*CLP	delta-BHC	UG/KG-DRY		ND		80-120
06/15/92	CCS*EVALB*1	39333*CLP	Aldrin	UG/KG-DRY	208000	213000	102	80-120
06/15/92	CCS*EVALB*1	39423*CLP	Heptachlor epoxide	UG/KG-DRY		ND		80-120
06/15/92	CCS*EVALB*1	39811*CLP	gamma-Chlordane	UG/KG-DRY		ND		80-120
06/15/92	CCS*EVALB*1	97501*CLP	alpha-Chlordane	UG/KG-DRY		ND		80-120
06/15/92	CCS*EVALB*1	34364*CLP	Endosulfan I	UG/KG-DRY		ND		80-120
06/15/92	CCS*EVALB*1	39321*CLP	4,4'-DDE	UG/KG-DRY		ND		80-120
06/15/92	CCS*EVALB*1	39383*CLP	Dieldrin	UG/KG-DRY		ND		80-120
06/15/92	CCS*EVALB*1	39393*CLP	Endrin	UG/KG-DRY	201000	203000	101	80-120
06/15/92	CCS*EVALB*1	39311*CLP	4,4'-DDD	UG/KG-DRY		ND		80-120
06/15/92	CCS*EVALB*1	34359*CLP	Endosulfan II	UG/KG-DRY		ND		80-120
06/15/92	CCS*EVALB*1	39301*CLP	4,4'-DDT	UG/KG-DRY	359000	360000	100	80-120
06/15/92	CCS*EVALB*1	34354*CLP	Endosulfan sulfate	UG/KG-DRY		ND		80-120
06/15/92	CCS*EVALB*1	39481*CLP	Methoxychlor	UG/KG-DRY		ND		80-120
06/15/92	CCS*EVALB*1	98591*CLP	Endrin ketone	UG/KG-DRY		ND		80-120
06/15/92	CCS*EVALB*1	39403*CLP	Toxaphene	UG/KG-DRY		ND		80-120
06/15/92	CCS*EVALB*1	39514*CLP	Aroclor-1016	UG/KG-DRY		ND		80-120
06/15/92	CCS*EVALB*1	39491*CLP	Aroclor-1221	UG/KG-DRY		ND		80-120
06/15/92	CCS*EVALB*1	39495*CLP	Aroclor-1232	UG/KG-DRY		ND		80-120
06/15/92	CCS*EVALB*1	39499*CLP	Aroclor-1242	UG/KG-DRY		ND		80-120
06/15/92	CCS*EVALB*1	39503*CLP	Aroclor-1248	UG/KG-DRY		ND		80-120
06/15/92	CCS*EVALB*1	39507*CLP	Aroclor-1254	UG/KG-DRY		ND		80-120
06/15/92	CCS*EVALB*1	39511*CLP	Aroclor-1260	UG/KG-DRY		ND		80-120
06/15/92	CCS*INDA*1	39076*CLP	alpha-BHC	UG/KG-DRY		ND		80-120
06/15/92	CCS*INDA*1	39783*CLP	gamma-BHC (Lindane)	UG/KG-DRY	45300	53700	119	80-120
06/15/92	CCS*INDA*1	34257*CLP	beta-BHC	UG/KG-DRY		ND		80-120
06/15/92	CCS*INDA*1	39413*CLP	Heptachlor	UG/KG-DRY	153000	176000	115	80-120
06/15/92	CCS*INDA*1	34262*CLP	delta-BHC	UG/KG-DRY		ND		80-120
06/15/92	CCS*INDA*1	39333*CLP	Aldrin	UG/KG-DRY	102000	119000	117	80-120
06/15/92	CCS*INDA*1	39423*CLP	Heptachlor epoxide	UG/KG-DRY	120000	139000	116	80-120
06/15/92	CCS*INDA*1	39811*CLP	gamma-Chlordane	UG/KG-DRY		ND		80-120
06/15/92	CCS*INDA*1	97501*CLP	alpha-Chlordane	UG/KG-DRY		ND		80-120
06/15/92	CCS*INDA*1	34364*CLP	Endosulfan I	UG/KG-DRY	111000	128000	115	80-120
'15/92	CCS*INDA*1	39321*CLP	4,4'-DDE	UG/KG-DRY		ND		80-120
15/92	CCS*INDA*1	39383*CLP	Dieldrin	UG/KG-DRY	99800	114000	114	80-120
15/92	CCS*INDA*1	39393*CLP	Endrin	UG/KG-DRY		ND		80-120
06/15/92	CCS*INDA*1	39311*CLP	4,4'-DDD	UG/KG-DRY		ND		80-120
06/15/92	CCS*INDA*1	34359*CLP	Endosulfan II	UG/KG-DRY	213000	234000	110	80-120
06/15/92	CCS*INDA*1	39301*CLP	4,4'-DDT	UG/KG-DRY	173000	195000	113	80-120
06/15/92	CCS*INDA*1	34354*CLP	Endosulfan sulfate	UG/KG-DRY		ND		80-120
06/15/92	CCS*INDA*1	39481*CLP	Methoxychlor	UG/KG-DRY	713000	766000	107	80-120
06/15/92	CCS*INDA*1	98591*CLP	Endrin ketone	UG/KG-DRY		ND		80-120
06/15/92	CCS*INDA*1	39403*CLP	Toxaphene	UG/KG-DRY		ND		80-120
06/15/92	CCS*INDA*1	39514*CLP	Aroclor-1016	UG/KG-DRY		ND		80-120
06/15/92	CCS*INDA*1	39491*CLP	Aroclor-1221	UG/KG-DRY		ND		80-120
06/15/92	CCS*INDA*1	39495*CLP	Aroclor-1232	UG/KG-DRY		ND		80-120
06/15/92	CCS*INDA*1	39499*CLP	Aroclor-1242	UG/KG-DRY		ND		80-120
06/15/92	CCS*INDA*1	39503*CLP	Aroclor-1248	UG/KG-DRY		ND		80-120
06/15/92	CCS*INDA*1	39507*CLP	Aroclor-1254	UG/KG-DRY		ND		80-120
06/15/92	CCS*INDA*1	39511*CLP	Aroclor-1260	UG/KG-DRY		ND		80-120
06/15/92	CCS*EVALB*2	39076*CLP	alpha-BHC	UG/KG-DRY		ND		80-120
06/15/92	CCS*EVALB*2	39783*CLP	gamma-BHC (Lindane)	UG/KG-DRY		ND		80-120
06/15/92	CCS*EVALB*2	34257*CLP	beta-BHC	UG/KG-DRY		ND		80-120
06/15/92	CCS*EVALB*2	39413*CLP	Heptachlor	UG/KG-DRY		ND		80-120
06/15/92	CCS*EVALB*2	34262*CLP	delta-BHC	UG/KG-DRY		ND		80-120
06/15/92	CCS*EVALB*2	39333*CLP	Aldrin	UG/KG-DRY	208000	208000	100.0	80-120
06/15/92	CCS*EVALB*2	39423*CLP	Heptachlor epoxide	UG/KG-DRY		ND		80-120
06/15/92	CCS*EVALB*2	39811*CLP	gamma-Chlordane	UG/KG-DRY		ND		80-120
06/15/92	CCS*EVALB*2	97501*CLP	alpha-Chlordane	UG/KG-DRY		ND		80-120
06/15/92	CCS*EVALB*2	34364*CLP	Endosulfan I	UG/KG-DRY		ND		80-120
06/15/92	CCS*EVALB*2	39321*CLP	4,4'-DDE	UG/KG-DRY		ND		80-120
06/15/92	CCS*EVALB*2	39383*CLP	Dieldrin	UG/KG-DRY		ND		80-120
06/15/92	CCS*EVALB*2	39393*CLP	Endrin	UG/KG-DRY	201000	192000	95.5	80-120
06/15/92	CCS*EVALB*2	39311*CLP	4,4'-DDD	UG/KG-DRY		ND		80-120
06/15/92	CCS*EVALB*2	34359*CLP	Endosulfan II	UG/KG-DRY		ND		80-120
06/15/92	CCS*EVALB*2	39301*CLP	4,4'-DDT	UG/KG-DRY	359000	333000	92.8	80-120
06/15/92	CCS*EVALB*2	34354*CLP	Endosulfan sulfate	UG/KG-DRY		ND		80-120
06/15/92	CCS*EVALB*2	39481*CLP	Methoxychlor	UG/KG-DRY		ND		80-120
'15/92	CCS*EVALB*2	98591*CLP	Endrin ketone	UG/KG-DRY		ND		80-120
5/92	CCS*EVALB*2	39403*CLP	Toxaphene	UG/KG-DRY		ND		80-120
15/92	CCS*EVALB*2	39514*CLP	Aroclor-1016	UG/KG-DRY		ND		80-120
06/15/92	CCS*EVALB*2	39491*CLP	Aroclor-1221	UG/KG-DRY		ND		80-120
06/15/92	CCS*EVALB*2	39495*CLP	Aroclor-1232	UG/KG-DRY		ND		80-120

ESE BATCH : 628907

Continuing Calibration Verification Sample Summary

DATE	SAMPLE	STORET	PARAMETER	UNITS	TARGET	FOUND	%RECV	RECV CRIT
06/15/92	CCS*EVALB*2	39499*CLP	Aroclor-1242	UG/KG-DRY		ND		80-120
06/15/92	CCS*EVALB*2	39503*CLP	Aroclor-1248	UG/KG-DRY		ND		80-120
06/15/92	CCS*EVALB*2	39507*CLP	Aroclor-1254	UG/KG-DRY		ND		80-120
06/15/92	CCS*EVALB*2	39511*CLP	Aroclor-1260	UG/KG-DRY		ND		80-120
06/15/92	CCS*INDB*1	39076*CLP	alpha-BHC	UG/KG-DRY	42200	43900	104	80-120
06/15/92	CCS*INDB*1	39783*CLP	gamma-BHC (Lindane)	UG/KG-DRY		ND		80-120
06/15/92	CCS*INDB*1	34257*CLP	beta-BHC	UG/KG-DRY	68200	69700	102	80-120
06/15/92	CCS*INDB*1	39413*CLP	Heptachlor	UG/KG-DRY		ND		80-120
06/15/92	CCS*INDB*1	34262*CLP	delta-BHC	UG/KG-DRY	92100	108000	117	80-120
06/15/92	CCS*INDB*1	39333*CLP	Aldrin	UG/KG-DRY	101000	105000	104	80-120
06/15/92	CCS*INDB*1	39423*CLP	Heptachlor epoxide	UG/KG-DRY		ND		80-120
06/15/92	CCS*INDB*1	39811*CLP	gamma-Chlordane	UG/KG-DRY	133000	134000	101	80-120
06/15/92	CCS*INDB*1	97501*CLP	alpha-Chlordane	UG/KG-DRY	133000	135000	102	80-120
06/15/92	CCS*INDB*1	34364*CLP	Endosulfan I	UG/KG-DRY		ND		80-120
06/15/92	CCS*INDB*1	39321*CLP	4,4'-DDE	UG/KG-DRY	96800	97900	101	80-120
06/15/92	CCS*INDB*1	39383*CLP	Dieldrin	UG/KG-DRY		ND		80-120
06/15/92	CCS*INDB*1	39393*CLP	Endrin	UG/KG-DRY	97600	97300	99.7	80-120
06/15/92	CCS*INDB*1	39311*CLP	4,4'-DDD	UG/KG-DRY	142000	143000	101	80-120
06/15/92	CCS*INDB*1	34359*CLP	Endosulfan II	UG/KG-DRY		ND		80-120
06/15/92	CCS*INDB*1	39301*CLP	4,4'-DDT	UG/KG-DRY		ND		80-120
06/15/92	CCS*INDB*1	34354*CLP	Endosulfan sulfate	UG/KG-DRY	187000	187000	100.0	80-120
06/15/92	CCS*INDB*1	39481*CLP	Methoxychlor	UG/KG-DRY		ND		80-120
06/15/92	CCS*INDB*1	98591*CLP	Endrin ketone	UG/KG-DRY	198000	195000	98.5	80-120
06/15/92	CCS*INDB*1	39403*CLP	Toxaphene	UG/KG-DRY		ND		80-120
06/15/92	CCS*INDB*1	39514*CLP	Aroclor-1016	UG/KG-DRY		ND		80-120
06/15/92	CCS*INDB*1	39491*CLP	Aroclor-1221	UG/KG-DRY		ND		80-120
06/15/92	CCS*INDB*1	39495*CLP	Aroclor-1232	UG/KG-DRY		ND		80-120
06/15/92	CCS*INDB*1	39499*CLP	Aroclor-1242	UG/KG-DRY		ND		80-120
06/15/92	CCS*INDB*1	39503*CLP	Aroclor-1248	UG/KG-DRY		ND		80-120
06/15/92	CCS*INDB*1	39507*CLP	Aroclor-1254	UG/KG-DRY		ND		80-120
06/15/92	CCS*INDB*1	39511*CLP	Aroclor-1260	UG/KG-DRY		ND		80-120
06/15/92	CCS*EVALB*3	39076*CLP	alpha-BHC	UG/KG-DRY		ND		80-120
06/15/92	CCS*EVALB*3	39783*CLP	gamma-BHC (Lindane)	UG/KG-DRY		ND		80-120
06/15/92	CCS*EVALB*3	34257*CLP	beta-BHC	UG/KG-DRY		ND		80-120
06/15/92	CCS*EVALB*3	39413*CLP	Heptachlor	UG/KG-DRY		ND		80-120
06/15/92	CCS*EVALB*3	34262*CLP	delta-BHC	UG/KG-DRY		ND		80-120
06/15/92	CCS*EVALB*3	39333*CLP	Aldrin	UG/KG-DRY	208000	210000	101	80-120
06/15/92	CCS*EVALB*3	39423*CLP	Heptachlor epoxide	UG/KG-DRY		ND		80-120
06/15/92	CCS*EVALB*3	39811*CLP	gamma-Chlordane	UG/KG-DRY		ND		80-120
06/15/92	CCS*EVALB*3	97501*CLP	alpha-Chlordane	UG/KG-DRY		ND		80-120
06/15/92	CCS*EVALB*3	34364*CLP	Endosulfan I	UG/KG-DRY		ND		80-120
06/15/92	CCS*EVALB*3	39321*CLP	4,4'-DDE	UG/KG-DRY		ND		80-120
06/15/92	CCS*EVALB*3	39383*CLP	Dieldrin	UG/KG-DRY		ND		80-120
06/15/92	CCS*EVALB*3	39393*CLP	Endrin	UG/KG-DRY	201000	199000	99.0	80-120
06/15/92	CCS*EVALB*3	39311*CLP	4,4'-DDD	UG/KG-DRY		ND		80-120
06/15/92	CCS*EVALB*3	34359*CLP	Endosulfan II	UG/KG-DRY		ND		80-120
06/15/92	CCS*EVALB*3	39301*CLP	4,4'-DDT	UG/KG-DRY	359000	342000	95.3	80-120
06/15/92	CCS*EVALB*3	34354*CLP	Endosulfan sulfate	UG/KG-DRY		ND		80-120
06/15/92	CCS*EVALB*3	39481*CLP	Methoxychlor	UG/KG-DRY		ND		80-120
06/15/92	CCS*EVALB*3	98591*CLP	Endrin ketone	UG/KG-DRY		ND		80-120
06/15/92	CCS*EVALB*3	39403*CLP	Toxaphene	UG/KG-DRY		ND		80-120
06/15/92	CCS*EVALB*3	39514*CLP	Aroclor-1016	UG/KG-DRY		ND		80-120
06/15/92	CCS*EVALB*3	39491*CLP	Aroclor-1221	UG/KG-DRY		ND		80-120
06/15/92	CCS*EVALB*3	39495*CLP	Aroclor-1232	UG/KG-DRY		ND		80-120
06/15/92	CCS*EVALB*3	39499*CLP	Aroclor-1242	UG/KG-DRY		ND		80-120
06/15/92	CCS*EVALB*3	39503*CLP	Aroclor-1248	UG/KG-DRY		ND		80-120
06/15/92	CCS*EVALB*3	39507*CLP	Aroclor-1254	UG/KG-DRY		ND		80-120
06/15/92	CCS*EVALB*3	39511*CLP	Aroclor-1260	UG/KG-DRY		ND		80-120
06/15/92	CCS*INDA*2	39076*CLP	alpha-BHC	UG/KG-DRY		ND		80-120
06/15/92	CCS*INDA*2	39783*CLP	gamma-BHC (Lindane)	UG/KG-DRY	45300	48700	108	80-120
06/15/92	CCS*INDA*2	34257*CLP	beta-BHC	UG/KG-DRY		ND		80-120
06/15/92	CCS*INDA*2	39413*CLP	Heptachlor	UG/KG-DRY	153000	158000	103	80-120
06/15/92	CCS*INDA*2	34262*CLP	delta-BHC	UG/KG-DRY		ND		80-120
06/15/92	CCS*INDA*2	39333*CLP	Aldrin	UG/KG-DRY	102000	108000	106	80-120
06/15/92	CCS*INDA*2	39423*CLP	Heptachlor epoxide	UG/KG-DRY	120000	124000	103	80-120
06/15/92	CCS*INDA*2	39811*CLP	gamma-Chlordane	UG/KG-DRY		ND		80-120
06/15/92	CCS*INDA*2	97501*CLP	alpha-Chlordane	UG/KG-DRY		ND		80-120
06/15/92	CCS*INDA*2	34364*CLP	Endosulfan I	UG/KG-DRY	111000	114000	103	80-120
06/15/92	CCS*INDA*2	39321*CLP	4,4'-DDE	UG/KG-DRY		ND		80-120
06/15/92	CCS*INDA*2	39383*CLP	Dieldrin	UG/KG-DRY	99800	101000	101	80-120
06/15/92	CCS*INDA*2	39393*CLP	Endrin	UG/KG-DRY		ND		80-120
06/15/92	CCS*INDA*2	39311*CLP	4,4'-DDD	UG/KG-DRY		ND		80-120
06/15/92	CCS*INDA*2	34359*CLP	Endosulfan II	UG/KG-DRY	213000	211000	99.1	80-120
06/15/92	CCS*INDA*2	39301*CLP	4,4'-DDT	UG/KG-DRY	173000	171000	98.8	80-120
06/15/92	CCS*INDA*2	34354*CLP	Endosulfan sulfate	UG/KG-DRY		ND		80-120
06/15/92	CCS*INDA*2	39481*CLP	Methoxychlor	UG/KG-DRY	713000	707000	99.2	80-120
06/15/92	CCS*INDA*2	98591*CLP	Endrin ketone	UG/KG-DRY		ND		80-120

ESE BATCH : 628907

Continuing Calibration Verification Sample Summary

DATE	SAMPLE	STORET	PARAMETER	UNITS	TARGET	FOUND	%RECV	RECV CRIT
06/15/92	CCS*INDA*2	39403*CLP	Toxaphene	UG/KG-DRY		ND		80-120
06/15/92	CCS*INDA*2	39514*CLP	Aroclor-1016	UG/KG-DRY		ND		80-120
06/15/92	CCS*INDA*2	39491*CLP	Aroclor-1221	UG/KG-DRY		ND		80-120
06/15/92	CCS*INDA*2	39495*CLP	Aroclor-1232	UG/KG-DRY		ND		80-120
06/15/92	CCS*INDA*2	39499*CLP	Aroclor-1242	UG/KG-DRY		ND		80-120
06/15/92	CCS*INDA*2	39503*CLP	Aroclor-1248	UG/KG-DRY		ND		80-120
06/15/92	CCS*INDA*2	39507*CLP	Aroclor-1254	UG/KG-DRY		ND		80-120
06/15/92	CCS*INDA*2	39511*CLP	Aroclor-1260	UG/KG-DRY		ND		80-120
06/15/92	CCS*EVALB*4	39076*CLP	alpha-BHC	UG/KG-DRY		ND		80-120
06/15/92	CCS*EVALB*4	39783*CLP	gamma-BHC (Lindane)	UG/KG-DRY		ND		80-120
06/15/92	CCS*EVALB*4	34257*CLP	beta-BHC	UG/KG-DRY		ND		80-120
06/15/92	CCS*EVALB*4	39413*CLP	Heptachlor	UG/KG-DRY		ND		80-120
06/15/92	CCS*EVALB*4	34262*CLP	delta-BHC	UG/KG-DRY		ND		80-120
06/15/92	CCS*EVALB*4	39333*CLP	Aldrin	UG/KG-DRY	208000	219000	105	80-120
06/15/92	CCS*EVALB*4	39423*CLP	Heptachlor epoxide	UG/KG-DRY		ND		80-120
06/15/92	CCS*EVALB*4	39811*CLP	gamma-Chlordane	UG/KG-DRY		ND		80-120
06/15/92	CCS*EVALB*4	97501*CLP	alpha-Chlordane	UG/KG-DRY		ND		80-120
06/15/92	CCS*EVALB*4	34364*CLP	Endosulfan I	UG/KG-DRY		ND		80-120
06/15/92	CCS*EVALB*4	39321*CLP	4,4'-DDE	UG/KG-DRY		ND		80-120
06/15/92	CCS*EVALB*4	39383*CLP	Dieldrin	UG/KG-DRY		ND		80-120
06/15/92	CCS*EVALB*4	39393*CLP	Endrin	UG/KG-DRY	201000	210000	104	80-120
06/15/92	CCS*EVALB*4	39311*CLP	4,4'-DDD	UG/KG-DRY		ND		80-120
06/15/92	CCS*EVALB*4	34359*CLP	Endosulfan II	UG/KG-DRY		ND		80-120
06/15/92	CCS*EVALB*4	39301*CLP	4,4'-DDT	UG/KG-DRY	359000	351000	97.8	80-120
06/15/92	CCS*EVALB*4	34354*CLP	Endosulfan sulfate	UG/KG-DRY		ND		80-120
06/15/92	CCS*EVALB*4	39481*CLP	Methoxychlor	UG/KG-DRY		ND		80-120
06/15/92	CCS*EVALB*4	98591*CLP	Endrin ketone	UG/KG-DRY		ND		80-120
06/15/92	CCS*EVALB*4	39403*CLP	Toxaphene	UG/KG-DRY		ND		80-120
06/15/92	CCS*EVALB*4	39514*CLP	Aroclor-1016	UG/KG-DRY		ND		80-120
06/15/92	CCS*EVALB*4	39491*CLP	Aroclor-1221	UG/KG-DRY		ND		80-120
06/15/92	CCS*EVALB*4	39495*CLP	Aroclor-1232	UG/KG-DRY		ND		80-120
06/15/92	CCS*EVALB*4	39499*CLP	Aroclor-1242	UG/KG-DRY		ND		80-120
06/15/92	CCS*EVALB*4	39503*CLP	Aroclor-1248	UG/KG-DRY		ND		80-120
06/15/92	CCS*EVALB*4	39507*CLP	Aroclor-1254	UG/KG-DRY		ND		80-120
06/15/92	CCS*EVALB*4	39511*CLP	Aroclor-1260	UG/KG-DRY		ND		80-120
06/15/92	CCS*INDA*3	39076*CLP	alpha-BHC	UG/KG-DRY		ND		80-120
06/15/92	CCS*INDA*3	39783*CLP	gamma-BHC (Lindane)	UG/KG-DRY	45300	46300	102	80-120
06/15/92	CCS*INDA*3	34257*CLP	beta-BHC	UG/KG-DRY		ND		80-120
06/15/92	CCS*INDA*3	39413*CLP	Heptachlor	UG/KG-DRY	153000	150000	98.0	80-120
06/15/92	CCS*INDA*3	34262*CLP	delta-BHC	UG/KG-DRY		ND		80-120
06/15/92	CCS*INDA*3	39333*CLP	Aldrin	UG/KG-DRY	102000	104000	102	80-120
06/15/92	CCS*INDA*3	39423*CLP	Heptachlor epoxide	UG/KG-DRY	120000	121000	101	80-120
06/15/92	CCS*INDA*3	39811*CLP	gamma-Chlordane	UG/KG-DRY		ND		80-120
06/15/92	CCS*INDA*3	97501*CLP	alpha-Chlordane	UG/KG-DRY		ND		80-120
06/15/92	CCS*INDA*3	34364*CLP	Endosulfan I	UG/KG-DRY	111000	111000	100.0	80-120
06/15/92	CCS*INDA*3	39321*CLP	4,4'-DDE	UG/KG-DRY		ND		80-120
06/15/92	CCS*INDA*3	39383*CLP	Dieldrin	UG/KG-DRY	99800	98500	98.7	80-120
06/15/92	CCS*INDA*3	39393*CLP	Endrin	UG/KG-DRY		ND		80-120
06/15/92	CCS*INDA*3	39311*CLP	4,4'-DDD	UG/KG-DRY		ND		80-120
06/15/92	CCS*INDA*3	34359*CLP	Endosulfan II	UG/KG-DRY	213000	207000	97.2	80-120
06/15/92	CCS*INDA*3	39301*CLP	4,4'-DDT	UG/KG-DRY	173000	167000	96.5	80-120
06/15/92	CCS*INDA*3	34354*CLP	Endosulfan sulfate	UG/KG-DRY		ND		80-120
06/15/92	CCS*INDA*3	39481*CLP	Methoxychlor	UG/KG-DRY	713000	689000	96.6	80-120
06/15/92	CCS*INDA*3	98591*CLP	Endrin ketone	UG/KG-DRY		ND		80-120
06/15/92	CCS*INDA*3	39403*CLP	Toxaphene	UG/KG-DRY		ND		80-120
06/15/92	CCS*INDA*3	39514*CLP	Aroclor-1016	UG/KG-DRY		ND		80-120
06/15/92	CCS*INDA*3	39491*CLP	Aroclor-1221	UG/KG-DRY		ND		80-120
06/15/92	CCS*INDA*3	39495*CLP	Aroclor-1232	UG/KG-DRY		ND		80-120
06/15/92	CCS*INDA*3	39499*CLP	Aroclor-1242	UG/KG-DRY		ND		80-120
06/15/92	CCS*INDA*3	39503*CLP	Aroclor-1248	UG/KG-DRY		ND		80-120
06/15/92	CCS*INDA*3	39507*CLP	Aroclor-1254	UG/KG-DRY		ND		80-120
06/15/92	CCS*INDA*3	39511*CLP	Aroclor-1260	UG/KG-DRY		ND		80-120
06/15/92	CCS*INDB*3	39076*CLP	alpha-BHC	UG/KG-DRY	42200	45400	108	80-120
06/15/92	CCS*INDB*3	39783*CLP	gamma-BHC (Lindane)	UG/KG-DRY		ND		80-120
06/15/92	CCS*INDB*3	34257*CLP	beta-BHC	UG/KG-DRY	68200	72200	106	80-120
06/15/92	CCS*INDB*3	39413*CLP	Heptachlor	UG/KG-DRY		ND		80-120
06/15/92	CCS*INDB*3	34262*CLP	delta-BHC	UG/KG-DRY	92100	87100	94.6	80-120
06/15/92	CCS*INDB*3	39333*CLP	Aldrin	UG/KG-DRY	101000	108000	107	80-120
06/15/92	CCS*INDB*3	39423*CLP	Heptachlor epoxide	UG/KG-DRY		ND		80-120
06/15/92	CCS*INDB*3	39811*CLP	gamma-Chlordane	UG/KG-DRY	133000	138000	104	80-120
06/15/92	CCS*INDB*3	97501*CLP	alpha-Chlordane	UG/KG-DRY	133000	139000	105	80-120
06/15/92	CCS*INDB*3	34364*CLP	Endosulfan I	UG/KG-DRY		ND		80-120
06/15/92	CCS*INDB*3	39321*CLP	4,4'-DDE	UG/KG-DRY	96800	102000	105	80-120
06/15/92	CCS*INDB*3	39383*CLP	Dieldrin	UG/KG-DRY		ND		80-120
06/15/92	CCS*INDB*3	39393*CLP	Endrin	UG/KG-DRY	97600	99500	102	80-120
06/15/92	CCS*INDB*3	39311*CLP	4,4'-DDD	UG/KG-DRY	142000	146000	103	80-120
06/15/92	CCS*INDB*3	34359*CLP	Endosulfan II	UG/KG-DRY		ND		80-120

ESE BATCH : G28907

Continuing Calibration Verification Sample Summary

DATE	SAMPLE	STORET	PARAMETER	UNITS	TARGET	FOUND	%RECV	RECV CRIT
06/15/92	CCS*INDB*3	39301*CLP	4,4'-DDT	UG/KG-DRY		ND		80-120
06/15/92	CCS*INDB*3	34354*CLP	Endosulfan sulfate	UG/KG-DRY	187000	186000	99.5	80-120
06/15/92	CCS*INDB*3	39481*CLP	Methoxychlor	UG/KG-DRY		ND		80-120
06/15/92	CCS*INDB*3	98591*CLP	Endrin ketone	UG/KG-DRY	198000	200000	101	80-120
06/15/92	CCS*INDB*3	39403*CLP	Toxaphene	UG/KG-DRY		ND		80-120
06/15/92	CCS*INDB*3	39514*CLP	Aroclor-1016	UG/KG-DRY		ND		80-120
06/15/92	CCS*INDB*3	39491*CLP	Aroclor-1221	UG/KG-DRY		ND		80-120
06/15/92	CCS*INDB*3	39495*CLP	Aroclor-1232	UG/KG-DRY		ND		80-120
06/15/92	CCS*INDB*3	39499*CLP	Aroclor-1242	UG/KG-DRY		ND		80-120
06/15/92	CCS*INDB*3	39503*CLP	Aroclor-1248	UG/KG-DRY		ND		80-120
06/15/92	CCS*INDB*3	39507*CLP	Aroclor-1254	UG/KG-DRY		ND		80-120
06/15/92	CCS*INDB*3	39511*CLP	Aroclor-1260	UG/KG-DRY		ND		80-120

Method Blank Sample Summary

DATE	SAMPLE	STORET	PARAMETER	UNITS	FOUND
06/15/92	MB*QC*1	39076*CLP	alpha-BHC	UG/KG-DRY	ND
06/15/92	MB*QC*1	39783*CLP	gamma-BHC (Lindane)	UG/KG-DRY	ND
06/15/92	MB*QC*1	34257*CLP	beta-BHC	UG/KG-DRY	ND
06/15/92	MB*QC*1	39413*CLP	Heptachlor	UG/KG-DRY	ND
06/15/92	MB*QC*1	34262*CLP	delta-BHC	UG/KG-DRY	ND
06/15/92	MB*QC*1	39333*CLP	Aldrin	UG/KG-DRY	ND
06/15/92	MB*QC*1	39423*CLP	Heptachlor epoxide	UG/KG-DRY	ND
06/15/92	MB*QC*1	39811*CLP	gamma-Chlordane	UG/KG-DRY	ND
06/15/92	MB*QC*1	97501*CLP	alpha-Chlordane	UG/KG-DRY	ND
06/15/92	MB*QC*1	34364*CLP	Endosulfan I	UG/KG-DRY	ND
06/15/92	MB*QC*1	39321*CLP	4,4'-DDE	UG/KG-DRY	ND
06/15/92	MB*QC*1	39383*CLP	Dieldrin	UG/KG-DRY	ND
06/15/92	MB*QC*1	39393*CLP	Endrin	UG/KG-DRY	ND
06/15/92	MB*QC*1	39311*CLP	4,4'-DDD	UG/KG-DRY	ND
06/15/92	MB*QC*1	34359*CLP	Endosulfan II	UG/KG-DRY	ND
06/15/92	MB*QC*1	39301*CLP	4,4'-DDT	UG/KG-DRY	ND
06/15/92	MB*QC*1	34354*CLP	Endosulfan sulfate	UG/KG-DRY	ND
06/15/92	MB*QC*1	39481*CLP	Methoxychlor	UG/KG-DRY	ND
06/15/92	MB*QC*1	98591*CLP	Endrin ketone	UG/KG-DRY	ND
06/15/92	MB*QC*1	39403*CLP	Toxaphene	UG/KG-DRY	ND
06/15/92	MB*QC*1	39514*CLP	Aroclor-1016	UG/KG-DRY	ND
06/15/92	MB*QC*1	39491*CLP	Aroclor-1221	UG/KG-DRY	ND
06/15/92	MB*QC*1	39495*CLP	Aroclor-1232	UG/KG-DRY	ND
06/15/92	MB*QC*1	39499*CLP	Aroclor-1242	UG/KG-DRY	ND
06/15/92	MB*QC*1	39503*CLP	Aroclor-1248	UG/KG-DRY	ND
06/15/92	MB*QC*1	39507*CLP	Aroclor-1254	UG/KG-DRY	ND
06/15/92	MB*QC*1	39511*CLP	Aroclor-1260	UG/KG-DRY	ND
06/15/92	MB*QC*2	39076*CLP	alpha-BHC	UG/KG-DRY	ND
06/15/92	MB*QC*2	39783*CLP	gamma-BHC (Lindane)	UG/KG-DRY	ND
06/15/92	MB*QC*2	34257*CLP	beta-BHC	UG/KG-DRY	ND
06/15/92	MB*QC*2	39413*CLP	Heptachlor	UG/KG-DRY	ND
06/15/92	MB*QC*2	34262*CLP	delta-BHC	UG/KG-DRY	ND
06/15/92	MB*QC*2	39333*CLP	Aldrin	UG/KG-DRY	ND
06/15/92	MB*QC*2	39423*CLP	Heptachlor epoxide	UG/KG-DRY	ND
06/15/92	MB*QC*2	39811*CLP	gamma-Chlordane	UG/KG-DRY	ND
06/15/92	MB*QC*2	97501*CLP	alpha-Chlordane	UG/KG-DRY	ND
06/15/92	MB*QC*2	34364*CLP	Endosulfan I	UG/KG-DRY	ND
06/15/92	MB*QC*2	39321*CLP	4,4'-DDE	UG/KG-DRY	ND
06/15/92	MB*QC*2	39383*CLP	Dieldrin	UG/KG-DRY	ND
06/15/92	MB*QC*2	39393*CLP	Endrin	UG/KG-DRY	ND
06/15/92	MB*QC*2	39311*CLP	4,4'-DDD	UG/KG-DRY	ND
06/15/92	MB*QC*2	34359*CLP	Endosulfan II	UG/KG-DRY	ND
06/15/92	MB*QC*2	39301*CLP	4,4'-DDT	UG/KG-DRY	ND
06/15/92	MB*QC*2	34354*CLP	Endosulfan sulfate	UG/KG-DRY	ND
06/15/92	MB*QC*2	39481*CLP	Methoxychlor	UG/KG-DRY	ND
06/15/92	MB*QC*2	98591*CLP	Endrin ketone	UG/KG-DRY	ND
06/15/92	MB*QC*2	39403*CLP	Toxaphene	UG/KG-DRY	ND
06/15/92	MB*QC*2	39514*CLP	Aroclor-1016	UG/KG-DRY	ND
06/15/92	MB*QC*2	39491*CLP	Aroclor-1221	UG/KG-DRY	ND
06/15/92	MB*QC*2	39495*CLP	Aroclor-1232	UG/KG-DRY	ND
06/15/92	MB*QC*2	39499*CLP	Aroclor-1242	UG/KG-DRY	ND
06/15/92	MB*QC*2	39503*CLP	Aroclor-1248	UG/KG-DRY	ND
06/15/92	MB*QC*2	39507*CLP	Aroclor-1254	UG/KG-DRY	ND
06/15/92	MB*QC*2	39511*CLP	Aroclor-1260	UG/KG-DRY	ND

Standard Matrix Spike Recovery Summary

DATE	SAMPLE	STORET	PARAMETER	%RECV	RECV CRIT	UNITS	TARGET	FOUND
06/15/92	SP1*QC*1	39076*CLP	alpha-BHC		80-120	UG/KG-DRY		ND
06/15/92	SP1*QC*1	39783*CLP	gamma-BHC (Lindane)		80-120	UG/KG-DRY		ND
06/15/92	SP1*QC*1	34257*CLP	beta-BHC		80-120	UG/KG-DRY		ND

ESE BATCH : G28907

Standard Matrix Spike Recovery Summary

DATE	SAMPLE	STORET	PARAMETER	%RECV	RECV CRIT	UNITS	TARGET	FOUND
06/15/92	SP1*QC*1	39413*CLP	Heptachlor	99.2	51-155	UG/KG-DRY	13.3	13.2
06/15/92	SP1*QC*1	39333*CLP	Aldrin	115.0	29-171	UG/KG-DRY	13.3	15.3
06/15/92	SP1*QC*1	39511*CLP	Aroclor-1260	92	34-184	UG/KG-DRY	130	120
06/15/92	SP1*QC*2	39413*CLP	Heptachlor	79.7	51-155	UG/KG-DRY	13.3	10.6
06/15/92	SP1*QC*2	39333*CLP	Aldrin	92.5	29-171	UG/KG-DRY	13.3	12.3
06/15/92	SP1*QC*2	39511*CLP	Aroclor-1260	85	34-184	UG/KG-DRY	130	110

Sample Matrix Spike Recovery Summary

DATE	SAMPLE	STORET	PARAMETER	%RECV	RECV CRIT	UNSPIKED	UNITS	TARGET	FOUND	RPD
06/15/92	SPM1*ALS2B*43	39783*CLP	gamma-BHC (Lindane)	91.1	45.5-127.5	0.0	UG/KG-DRY	63.8	58.1	
06/15/92	SPM1*ALS2B*43	39413*CLP	Heptachlor	84.2	51-155	0.0	UG/KG-DRY	67.0	56.4	
06/15/92	SPM1*ALS2B*43	39333*CLP	Aldrin	89.8	29-171	0.0	UG/KG-DRY	63.8	57.3	
06/15/92	SPM1*ALS2B*43	39383*CLP	Dieldrin	85.3	31-135	0.0	UG/KG-DRY	163	139	
06/15/92	SPM1*ALS2B*43	39393*CLP	Endrin	79.2	57-121	0.0	UG/KG-DRY	159	126	
06/15/92	SPM1*ALS2B*43	39301*CLP	4,4'-DDT	77.9	23-135	0.0	UG/KG-DRY	163	127	
06/15/92	SPM2*ALS2B*43	39783*CLP	gamma-BHC (Lindane)	84.3	45.5-127.5	0.0	UG/KG-DRY	63.8	53.8	7.75
06/15/92	SPM2*ALS2B*43	39413*CLP	Heptachlor	79.3	51-155	0.0	UG/KG-DRY	67.0	53.1	5.99
06/15/92	SPM2*ALS2B*43	39333*CLP	Aldrin	87.1	29-171	0.0	UG/KG-DRY	63.8	55.6	2.94
06/15/92	SPM2*ALS2B*43	39383*CLP	Dieldrin	81.6	31-135	0.0	UG/KG-DRY	163	133	4.19
06/15/92	SPM2*ALS2B*43	39393*CLP	Endrin	82.4	57-121	0.0	UG/KG-DRY	159	131	3.60
06/15/92	SPM2*ALS2B*43	39301*CLP	4,4'-DDT	77.9	23-135	0.0	UG/KG-DRY	163	127	0.256
06/15/92	SPM1*ALS2B*42	39783*CLP	gamma-BHC (Lindane)	92.1	45.5-127.5	0.0	UG/KG-DRY	62.1	57.2	
06/15/92	SPM1*ALS2B*42	39413*CLP	Heptachlor	87.9	51-155	0.0	UG/KG-DRY	65.2	57.3	
06/15/92	SPM1*ALS2B*42	39333*CLP	Aldrin	101.9	29-171	0.0	UG/KG-DRY	62.1	63.3	
06/15/92	SPM1*ALS2B*42	39383*CLP	Dieldrin	91.8	31-135	0.0	UG/KG-DRY	158	145	
06/15/92	SPM1*ALS2B*42	39393*CLP	Endrin	96.8	57-121	0.0	UG/KG-DRY	155	150	
06/15/92	SPM1*ALS2B*42	39301*CLP	4,4'-DDT	90.5	23-135	0.0	UG/KG-DRY	158	143	
06/15/92	SPM2*ALS2B*42	39783*CLP	gamma-BHC (Lindane)	100.5	45.5-127.5	0.0	UG/KG-DRY	62.1	62.4	9.22
06/15/92	SPM2*ALS2B*42	39413*CLP	Heptachlor	93.6	51-155	0.0	UG/KG-DRY	65.2	61.0	6.28
06/15/92	SPM2*ALS2B*42	39333*CLP	Aldrin	110.1	29-171	0.0	UG/KG-DRY	62.1	68.4	7.55
06/15/92	SPM2*ALS2B*42	39383*CLP	Dieldrin	98.7	31-135	0.0	UG/KG-DRY	158	156	7.04
06/15/92	SPM2*ALS2B*42	39393*CLP	Endrin	104.5	57-121	0.0	UG/KG-DRY	155	162	7.17
06/15/92	SPM2*ALS2B*42	39301*CLP	4,4'-DDT	98.7	23-135	0.0	UG/KG-DRY	158	156	8.47

Surrogate Spike Recovery Summary

DATE	SAMPLE	STORET	PARAMETER	UNITS	TARGET	FOUND	%RECV	RECV CRIT	
06/16/92	MB*QC*1	97503*SUR	DIBUTYLCHLORENDATE	UG/KG	133	213	160	32-156	*
06/16/92	MB*QC*2	97503*SUR	DIBUTYLCHLORENDATE	UG/KG	133	132	99.2	32-156	
06/16/92	SP1*QC*1	97503*SUR	DIBUTYLCHLORENDATE	UG/KG	133	149	112	32-156	
06/16/92	SP1*QC*2	97503*SUR	DIBUTYLCHLORENDATE	UG/KG	133	123	92.5	32-156	
06/16/92	SPM1*ALS2B*43	97503*SUR	DIBUTYLCHLORENDATE	UG/KG	133	148	111	32-156	
06/16/92	CCS*EVALB*1	97503*SUR	DIBUTYLCHLORENDATE	UG/KG	412000	426000	103	32-156	
06/16/92	SPM2*ALS2B*43	97503*SUR	DIBUTYLCHLORENDATE	UG/KG	133	142	107	32-156	
06/16/92	SPM1*ALS2B*42	97503*SUR	DIBUTYLCHLORENDATE	UG/KG	133	132	99.2	32-156	
06/16/92	SPM2*ALS2B*42	97503*SUR	DIBUTYLCHLORENDATE	UG/KG	133	144	108	32-156	
06/16/92	CCS*INDA*1	97503*SUR	DIBUTYLCHLORENDATE	UG/KG	436000	479000	110	32-156	
06/16/92	CCS*EVALB*2	97503*SUR	DIBUTYLCHLORENDATE	UG/KG	412000	369000	89.6	32-156	
06/17/92	CCS*INDB*1	97503*SUR	DIBUTYLCHLORENDATE	UG/KG	449000	444000	98.9	32-156	
06/17/92	DA*ALS2B*32	97503*SUR	DIBUTYLCHLORENDATE	UG/KG	133	161	121	32-156	
06/17/92	DA*ALS2B*33	97503*SUR	DIBUTYLCHLORENDATE	UG/KG	133	120	90.2	32-156	
06/17/92	DA*ALS2B*34	97503*SUR	DIBUTYLCHLORENDATE	UG/KG	133	123	92.5	32-156	
06/17/92	DA*ALS2B*30	97503*SUR	DIBUTYLCHLORENDATE	UG/KG	133	129	97.0	32-156	
06/17/92	CCS*EVALB*3	97503*SUR	DIBUTYLCHLORENDATE	UG/KG	412000	389000	94.4	32-156	
06/17/92	DA*ALS2B*35	97503*SUR	DIBUTYLCHLORENDATE	UG/KG	133	131	98.5	32-156	
06/17/92	DA*ALS2B*36	97503*SUR	DIBUTYLCHLORENDATE	UG/KG	133	138	104	32-156	
06/17/92	DA*ALS2B*37	97503*SUR	DIBUTYLCHLORENDATE	UG/KG	133	115	86.5	32-156	
06/17/92	DA*ALS2B*38	97503*SUR	DIBUTYLCHLORENDATE	UG/KG	133	162	122	32-156	
06/17/92	DA*ALS2B*39	97503*SUR	DIBUTYLCHLORENDATE	UG/KG	133	142	107	32-156	
06/17/92	CCS*INDA*2	97503*SUR	DIBUTYLCHLORENDATE	UG/KG	436000	426000	97.7	32-156	
06/17/92	DA*ALS2B*41	97503*SUR	DIBUTYLCHLORENDATE	UG/KG	133	342	257	32-156	*
06/17/92	DA*ALS2B*40	97503*SUR	DIBUTYLCHLORENDATE	UG/KG	133	127	95.5	32-156	
06/17/92	DA*ALS2B*42	97503*SUR	DIBUTYLCHLORENDATE	UG/KG	133	139	105	32-156	
06/17/92	DA*ALS2B*43	97503*SUR	DIBUTYLCHLORENDATE	UG/KG	133	140	105	32-156	
06/17/92	DA*ALS2B*31	97503*SUR	DIBUTYLCHLORENDATE	UG/KG	133	139	105	32-156	
06/17/92	CCS*EVALB*4	97503*SUR	DIBUTYLCHLORENDATE	UG/KG	412000	398000	96.6	32-156	
06/17/92	DA*ALS2B*29	97503*SUR	DIBUTYLCHLORENDATE	UG/KG	133	445	335	32-156	*
06/17/92	DA*ALS2B*28	97503*SUR	DIBUTYLCHLORENDATE	UG/KG	133	132	99.2	32-156	
06/17/92	DA*ALS2B*27	97503*SUR	DIBUTYLCHLORENDATE	UG/KG	133	132	99.2	32-156	
06/18/92	CCS*INDA*3	97503*SUR	DIBUTYLCHLORENDATE	UG/KG	436000	422000	96.8	32-156	
06/18/92	CCS*INDB*3	97503*SUR	DIBUTYLCHLORENDATE	UG/KG	449000	452000	101	32-156	

ESE BATCH : G28907

Environmental Science and Engineering Analytical Services

Computer QC Checks

Batch No.: G28907 Analysis Date: 06/15/92 Analyst: MARTHA LONGFELLOW

	Yes	"Exceptions" No	Comment / Corrective Action
Analysis holding time within criteria?	X		
Extract holding time within criteria?	X		
Method blank present?	X		
Method blank within acceptance criteria?	X		
Standard matrix spike present?	X		
Standard matrix spike within acceptance criteria?	X		
Sample matrix spike present?	X		
Sample matrix spike within acceptance criteria?	X		
Sample matrix spike duplicate present?	X		
Sample matrix spike duplicate within acceptance criteria?	X		
Surrogate present?	X		
Surrogate within acceptance criteria?		X	

Note: Any "NO" answer requires a comment.

OVERRIDE COMMENTS

PROB.:SURROGATE NOT WITHIN ACCEPTANCE CRITERIA.
EXPL.:THE SAMPLES THAT EXCEED CRITERIA (MB*NONE*1, DA*ALS2B*41, 29) REPORTED NO HITS. THE RECOVERIES ARE SUPPORTED BY THE SECOND COLUMN. ALL CCS'S ARE WITHIN CRITERIA. ALL SP AND SPM'S ARE WITHIN CRITERIA./MLL

EDB

ESE BATCH : G28375
CLASSIFICATION : EDB - MODIFIED EPA 504

STATUS : FINAL

METHOD BLANK CORRECTION METHOD : NONE

FIELD GRP	PROJECT NUMBER	PROJECT NAME	LAB COORDINATOR
2B	3914042 0201	JMM/ALAMEDA CTO-121	JACKIE HARGROVE-ELLI

SAMPLE CODE	CLIENT ID	DATE ANALYZED	TIME ANALYZED
ALS2B*27	M-BG1		
ALS2B*28	M-BG1		
ALS2B*29	M-BG1		
ALS2B*30	M-BG1		
ALS2B*31	M-BG2		
ALS2B*32	M-BG2		
ALS2B*33	M-BG2		
ALS2B*34	M-BG2		
ALS2B*35	M-BG3		
ALS2B*36	M-BG3		
ALS2B*37	M-BG3		
ALS2B*38	M-BG3		
ALS2B*39	M-BG4		
ALS2B*40	M-BG4		
ALS2B*41	M-BG4		
ALS2B*42	M-BG4		
ALS2B*43	BG-DUP1		

Continuing Calibration Verification Sample Summary

DATE	SAMPLE	STORET	PARAMETER		UNITS	TARGET	FOUND	%RECV	RECV CRIT
06/02/92	CCS*QC*1	78756*EC	1,2-DIBROMOETHANE	(EDB)	UG/KG-DRY	5820	5540	95.2	80-120

Method Blank Sample Summary

DATE	SAMPLE	STORET	PARAMETER		UNITS	FOUND
06/02/92	MB*QC*1	78756*EC	1,2-DIBROMOETHANE	(EDB)	UG/KG-DRY	ND

Standard Matrix Spike Recovery Summary

DATE	SAMPLE	STORET	PARAMETER		%RECV	RECV CRIT	UNITS	TARGET	FOUND
06/02/92	SP1*QC*1	78756*EC	1,2-DIBROMOETHANE	(EDB)	104.8	63-133	UG/KG-DRY	5.00	5.24
06/02/92	SP2*QC*1	78756*EC	1,2-DIBROMOETHANE	(EDB)	100.0	63-133	UG/KG-DRY	5.00	5.00

Sample Matrix Spike Recovery Summary

DATE	SAMPLE	STORET	PARAMETER		%RECV	RECV CRIT	UNSPIKED	UNITS	TARGET	FOUND	RPD
06/02/92	SPM1*ALS2B*43	78756*EC	1,2-DIBROMOETHANE	(EDB)	95.3	63-133	0.0	UG/KG-DRY	5.14	4.90	
06/02/92	SPM2*ALS2B*43	78756*EC	1,2-DIBROMOETHANE	(EDB)	96.1	63-133	0.0	UG/KG-DRY	5.14	4.94	0.836

Surrogate Spike Recovery Summary

DATE	SAMPLE	STORET	PARAMETER	UNITS	TARGET	FOUND	%RECV	RECV CRIT
06/02/92	MB*QC*1	97606*SUR	2-BROMO-1-CHLOROPROPANE	UG/L	100.0	100.0	100.0	80-120
06/02/92	CCS*QC*1	97606*SUR	2-BROMO-1-CHLOROPROPANE	UG/L	100.0	99.7	99.7	80-120
06/02/92	SP1*QC*1	97606*SUR	2-BROMO-1-CHLOROPROPANE	UG/L	100.0	101	101	80-120
06/02/92	SP2*QC*1	97606*SUR	2-BROMO-1-CHLOROPROPANE	UG/L	100.0	98.1	98.1	80-120
06/02/92	SPM1*ALS2B*43	97606*SUR	2-BROMO-1-CHLOROPROPANE	UG/L	100.0	101	101	80-120
06/02/92	SPM2*ALS2B*43	97606*SUR	2-BROMO-1-CHLOROPROPANE	UG/L	100.0	100.0	100.0	80-120
06/02/92	DA*ALS2B*27	97606*SUR	2-BROMO-1-CHLOROPROPANE	UG/L	100.0	103	103	80-120
06/02/92	DA*ALS2B*28	97606*SUR	2-BROMO-1-CHLOROPROPANE	UG/L	100.0	102	102	80-120
06/02/92	DA*ALS2B*29	97606*SUR	2-BROMO-1-CHLOROPROPANE	UG/L	100.0	99.7	99.7	80-120
06/02/92	DA*ALS2B*30	97606*SUR	2-BROMO-1-CHLOROPROPANE	UG/L	100.0	99.3	99.3	80-120
06/02/92	DA*ALS2B*31	97606*SUR	2-BROMO-1-CHLOROPROPANE	UG/L	100.0	97.6	97.6	80-120
06/02/92	DA*ALS2B*32	97606*SUR	2-BROMO-1-CHLOROPROPANE	UG/L	100.0	102	102	80-120
06/02/92	DA*ALS2B*33	97606*SUR	2-BROMO-1-CHLOROPROPANE	UG/L	100.0	102	102	80-120
06/02/92	DA*ALS2B*34	97606*SUR	2-BROMO-1-CHLOROPROPANE	UG/L	100.0	101	101	80-120
06/02/92	DA*ALS2B*35	97606*SUR	2-BROMO-1-CHLOROPROPANE	UG/L	100.0	100.0	100.0	80-120
06/02/92	DA*ALS2B*36	97606*SUR	2-BROMO-1-CHLOROPROPANE	UG/L	100.0	98.1	98.1	80-120
06/02/92	DA*ALS2B*37	97606*SUR	2-BROMO-1-CHLOROPROPANE	UG/L	100.0	104	104	80-120
06/02/92	DA*ALS2B*38	97606*SUR	2-BROMO-1-CHLOROPROPANE	UG/L	100.0	103	103	80-120
06/02/92	DA*ALS2B*39	97606*SUR	2-BROMO-1-CHLOROPROPANE	UG/L	100.0	102	102	80-120
06/02/92	DA*ALS2B*40	97606*SUR	2-BROMO-1-CHLOROPROPANE	UG/L	100.0	100.0	100.0	80-120
06/02/92	DA*ALS2B*41	97606*SUR	2-BROMO-1-CHLOROPROPANE	UG/L	100.0	103	103	80-120
06/02/92	DA*ALS2B*42	97606*SUR	2-BROMO-1-CHLOROPROPANE	UG/L	100.0	102	102	80-120
06/02/92	DA*ALS2B*43	97606*SUR	2-BROMO-1-CHLOROPROPANE	UG/L	100.0	100.0	100.0	80-120

ESE BATCH : G28375

Environmental Science and Engineering Analytical Services
Computer QC Checks

Batch No.: G28375 Analysis Date: 06/02/92 Analyst: TIMOTHY RACKI

	Yes	"Exceptions" No	Comment / Corrective Action
Analysis holding time within criteria?	X		
Extract holding time within criteria?	X		
Method blank present?	X		
Method blank within acceptance criteria?	X		
Standard matrix spike present?	X		
Standard matrix spike within acceptance criteria?	X		
Sample matrix spike present?	X		
Sample matrix spike within acceptance criteria?	X		
Sample matrix spike duplicate present?	X		
Sample matrix spike duplicate within acceptance criteria?	X		

Note: Any "NO" answer requires a comment.

Total Recoverable Petroleum Hydrocarbons

ESE BATCH : G28425
CLASSIFICATION : TRPH - (SW 9071/418.1)

STATUS : FINAL

METHOD BLANK CORRECTION METHOD : NONE

FIELD GRP	PROJECT NUMBER	PROJECT NAME	LAB COORDINATOR
S2B	3914042 0201	JMM/ALAMEDA CTO-121	JACKIE HARGROVE-ELLI

SAMPLE CODE	CLIENT ID	DATE ANALYZED	TIME ANALYZED
ALS2B*27	M-BG1		
ALS2B*28	M-BG1		
ALS2B*29	M-BG1		
ALS2B*30	M-BG1		
ALS2B*31	M-BG2		
ALS2B*32	M-BG2		
ALS2B*33	M-BG2		
ALS2B*34	M-BG2		
ALS2B*35	M-BG3		
ALS2B*36	M-BG3		
ALS2B*37	M-BG3		
ALS2B*38	M-BG3		
ALS2B*39	M-BG4		
ALS2B*40	M-BG4		
ALS2B*41	M-BG4		
ALS2B*42	M-BG4		
ALS2B*43	BG-DUP1		

Initial Calibration Blank Summary

DATE	SAMPLE	STORET	PARAMETER	UNITS	FOUND
06/04/92	ICB*QC*1	98233*1	HYDROCARBONS,PETROL	UG/G-DRY	ND

Continuing Calibration Blank Sample Summary

DATE	SAMPLE	STORET	PARAMETER	UNITS	FOUND
06/04/92	CCB*QC*1	98233*1	HYDROCARBONS,PETROL	UG/G-DRY	ND
06/04/92	CCB*QC*2	98233*1	HYDROCARBONS,PETROL	UG/G-DRY	ND
06/04/92	CCB*QC*3	98233*1	HYDROCARBONS,PETROL	UG/G-DRY	ND
06/04/92	CCB*QC*4	98233*1	HYDROCARBONS,PETROL	UG/G-DRY	ND

tial Calibration Verification Sample Summary

DATE	SAMPLE	STORET	PARAMETER	UNITS	TARGET	FOUND	%RECV	RECV CRIT
06/04/92	ICV*QC*1	98233*1	HYDROCARBONS,PETROL	UG/G-DRY	34.1	36.2	106	80-120

Continuing Calibration Verification Sample Summary

DATE	SAMPLE	STORET	PARAMETER	UNITS	TARGET	FOUND	%RECV	RECV CRIT
06/04/92	CCV*QC*1	98233*1	HYDROCARBONS,PETROL	UG/G-DRY	34.1	31.7	93.0	80-120
06/04/92	CCV*QC*2	98233*1	HYDROCARBONS,PETROL	UG/G-DRY	34.1	36.2	106	80-120
06/04/92	CCV*QC*3	98233*1	HYDROCARBONS,PETROL	UG/G-DRY	34.1	35.1	103	80-120
06/04/92	CCV*QC*4	98233*1	HYDROCARBONS,PETROL	UG/G-DRY	34.1	36.2	106	80-120

Method Blank Sample Summary

DATE	SAMPLE	STORET	PARAMETER	UNITS	FOUND
06/04/92	MB*QC*1	98233*1	HYDROCARBONS,PETROL	UG/G-DRY	4.52

Standard Matrix Spike Recovery Summary

DATE	SAMPLE	STORET	PARAMETER	%RECV	RECV CRIT	UNITS	TARGET	FOUND
06/04/92	SP1*QC*1	98233*1	HYDROCARBONS,PETROL	108.8	76-122	UG/G-DRY	1130	1230

Sample Matrix Spike Recovery Summary

DATE	SAMPLE	STORET	PARAMETER	%RECV	RECV CRIT	UNSPIKED	UNITS	TARGET	FOUND	RPD
06/04/92	SPM1*ALS2B*43	98233*1	HYDROCARBONS,PETROL	103.7	76-122	73.6	UG/G-DRY	1360	1410	
06/04/92	SPM2*ALS2B*43	98233*1	HYDROCARBONS,PETROL	103.7	76-122	73.6	UG/G-DRY	1350	1400	0.966

ESE BATCH : G28425

Environmental Science and Engineering Analytical Services

Computer QC Checks

Batch No.: G28425 Analysis Date: 06/04/92 Analyst: ERIC ANDERSON

	Yes	"Exceptions" No	Comment / Corrective Action
Analysis holding time within criteria?	X		
Extract holding time within criteria?	X		
No. of calibration standards present acceptable?	X		
Curve correlation coefficient >= 0.995?	X		
Calibration curve y-intercept < curve detection limit?	X		
Sample responses within highest standard response?	X		
Method blank present?	X		
Method blank within acceptance criteria?	X		
Standard matrix spike present?	X		
Standard matrix spike within acceptance criteria?	X		
Sample matrix spike present?	X		
Sample matrix spike within acceptance criteria?	X		
Sample matrix spike duplicate present?	X		
Sample matrix spike duplicate within acceptance criteria?	X		

Note: Any "NO" answer requires a comment.

METALS

ESE BATCH : G28464
CLASSIFICATION : TAL METALS - CLP SOW 3/90

STATUS : FINAL

METHOD BLANK CORRECTION METHOD : NONE

FLD GRP	PROJECT NUMBER	PROJECT NAME	LAB COORDINATOR
2B	3914042 0201	JMM/ALAMEDA CTO-121	JACKIE HARGROVE-ELLI

EH JMM

SAMPLE CODE	CLIENT ID	DATE ANALYZED	TIME ANALYZED
ALS2B*27	M-BG1	06/05/92	12:21PM
ALS2B*28	M-BG1	06/05/92	12:24PM
ALS2B*29	M-BG1	06/05/92	12:26PM
ALS2B*30	M-BG1	06/05/92	02:16PM
ALS2B*31	M-BG2	06/05/92	02:18PM
ALS2B*32	M-BG2	06/05/92	02:21PM
ALS2B*33	M-BG2	06/05/92	02:23PM
ALS2B*34	M-BG2	06/05/92	02:25PM
ALS2B*35	M-BG3	06/05/92	02:29PM
ALS2B*36	M-BG3	06/05/92	02:32PM
ALS2B*37	M-BG3	06/05/92	02:34PM
ALS2B*38	M-BG3	06/05/92	02:36PM
ALS2B*39	M-BG4	06/05/92	02:39PM
ALS2B*40	M-BG4	06/05/92	02:47PM
ALS2B*41	M-BG4	06/05/92	02:49PM
ALS2B*42	M-BG4	06/05/92	02:52PM
ALS2B*43	BG-DUP1	06/05/92	02:55PM
ALS2B*73	B-05HW-02	06/05/92	03:32PM
ALS2B*74	B-05HW-02	06/05/92	03:35PM
ALS2B*75	B-05HW-02	06/05/92	03:37PM
ALS2B*76	B-05HW-02	06/05/92	03:49PM
ALS2B*77	M-05HW-01	06/05/92	03:51PM
ALS2B*78	M-05HW-01	06/05/92	03:53PM
ALS2B*79	M-05HW-01	06/05/92	03:56PM
ALS2B*80	M-05HW-01	06/05/92	03:58PM
ALS2B*81	05HW-DUP1	06/05/92	04:00PM
ALS2B*83	M-05BS-01	06/05/92	04:19PM
ALS2B*84	M-05BS-01	06/05/92	04:28PM
ALS2B*85	M-05BS-01	06/05/92	04:31PM
ALS2B*86	M-05BS-01	06/05/92	04:33PM

ESE BATCH : G28464

Initial Calibration Blank Summary

DATE	SAMPLE	STORET	PARAMETER	UNITS	FOUND
06/05/92	ICB*QC*1	1078*CLP90	SILVER	MG/KG-DRY	0.0009
06/05/92	ICB*QC*1	1108*CLP90	ALUMINUM	MG/KG-DRY	0.007
06/05/92	ICB*QC*1	1008*CLP90	BARIUM	MG/KG-DRY	0.0001
06/05/92	ICB*QC*1	1013*CLP90	BERYLLIUM	MG/KG-DRY	ND
06/05/92	ICB*QC*1	917*CLP90	CALCIUM	MG/KG-DRY	0.002
06/05/92	ICB*QC*1	1028*CLP90	CADMIUM	MG/KG-DRY	0.0009
06/05/92	ICB*QC*1	1038*CLP90	COBALT	MG/KG-DRY	ND
06/05/92	ICB*QC*1	1029*CLP90	CHROMIUM	MG/KG-DRY	0.0003
06/05/92	ICB*QC*1	1043*CLP90	COPPER	MG/KG-DRY	0.0003
06/05/92	ICB*QC*1	1170*CLP90	IRON	MG/KG-DRY	0.005
06/05/92	ICB*QC*1	938*CLP90	POTASSIUM	MG/KG-DRY	0.228
06/05/92	ICB*QC*1	924*CLP90	MAGNESIUM	MG/KG-DRY	0.016
06/05/92	ICB*QC*1	1053*CLP90	MANGANESE	MG/KG-DRY	0.0001
06/05/92	ICB*QC*1	934*CLP90	SODIUM	MG/KG-DRY	0.015
06/05/92	ICB*QC*1	1068*CLP90	NICKEL	MG/KG-DRY	ND
06/05/92	ICB*QC*1	1098*CLP90	ANTIMONY	MG/KG-DRY	0.003
06/05/92	ICB*QC*1	1088*CLP90	VANADIUM	MG/KG-DRY	0.002
06/05/92	ICB*QC*1	1093*CLP90	ZINC	MG/KG-DRY	0.0002

Continuing Calibration Blank Sample Summary

DATE	SAMPLE	STORET	PARAMETER	UNITS	FOUND
06/05/92	CCB*QC*1	1078*CLP90	SILVER	MG/KG-DRY	ND
06/05/92	CCB*QC*1	1108*CLP90	ALUMINUM	MG/KG-DRY	ND
06/05/92	CCB*QC*1	1008*CLP90	BARIUM	MG/KG-DRY	ND
06/05/92	CCB*QC*1	1013*CLP90	BERYLLIUM	MG/KG-DRY	ND
06/05/92	CCB*QC*1	917*CLP90	CALCIUM	MG/KG-DRY	0.002
06/05/92	CCB*QC*1	1028*CLP90	CADMIUM	MG/KG-DRY	0.0007
06/05/92	CCB*QC*1	1038*CLP90	COBALT	MG/KG-DRY	ND
06/05/92	CCB*QC*1	1029*CLP90	CHROMIUM	MG/KG-DRY	0.002
06/05/92	CCB*QC*1	1043*CLP90	COPPER	MG/KG-DRY	ND
06/05/92	CCB*QC*1	1170*CLP90	IRON	MG/KG-DRY	0.005
06/05/92	CCB*QC*1	938*CLP90	POTASSIUM	MG/KG-DRY	ND
06/05/92	CCB*QC*1	924*CLP90	MAGNESIUM	MG/KG-DRY	0.007
06/05/92	CCB*QC*1	1053*CLP90	MANGANESE	MG/KG-DRY	ND
06/05/92	CCB*QC*1	934*CLP90	SODIUM	MG/KG-DRY	ND
06/05/92	CCB*QC*1	1068*CLP90	NICKEL	MG/KG-DRY	0.002
06/05/92	CCB*QC*1	1098*CLP90	ANTIMONY	MG/KG-DRY	ND
06/05/92	CCB*QC*1	1088*CLP90	VANADIUM	MG/KG-DRY	ND
06/05/92	CCB*QC*1	1093*CLP90	ZINC	MG/KG-DRY	0.0005
06/05/92	CCB*QC*2	1078*CLP90	SILVER	MG/KG-DRY	ND
06/05/92	CCB*QC*2	1108*CLP90	ALUMINUM	MG/KG-DRY	ND
06/05/92	CCB*QC*2	1008*CLP90	BARIUM	MG/KG-DRY	ND
06/05/92	CCB*QC*2	1013*CLP90	BERYLLIUM	MG/KG-DRY	ND
06/05/92	CCB*QC*2	917*CLP90	CALCIUM	MG/KG-DRY	ND
06/05/92	CCB*QC*2	1028*CLP90	CADMIUM	MG/KG-DRY	0.0005
06/05/92	CCB*QC*2	1038*CLP90	COBALT	MG/KG-DRY	ND
06/05/92	CCB*QC*2	1029*CLP90	CHROMIUM	MG/KG-DRY	ND
06/05/92	CCB*QC*2	1043*CLP90	COPPER	MG/KG-DRY	ND
06/05/92	CCB*QC*2	1170*CLP90	IRON	MG/KG-DRY	0.002
06/05/92	CCB*QC*2	938*CLP90	POTASSIUM	MG/KG-DRY	ND
06/05/92	CCB*QC*2	924*CLP90	MAGNESIUM	MG/KG-DRY	ND
06/05/92	CCB*QC*2	1053*CLP90	MANGANESE	MG/KG-DRY	ND
06/05/92	CCB*QC*2	934*CLP90	SODIUM	MG/KG-DRY	ND
06/05/92	CCB*QC*2	1068*CLP90	NICKEL	MG/KG-DRY	0.003
06/05/92	CCB*QC*2	1098*CLP90	ANTIMONY	MG/KG-DRY	ND
06/05/92	CCB*QC*2	1088*CLP90	VANADIUM	MG/KG-DRY	ND
06/05/92	CCB*QC*2	1093*CLP90	ZINC	MG/KG-DRY	ND
06/05/92	CCB*QC*3	1078*CLP90	SILVER	MG/KG-DRY	0.0003
06/05/92	CCB*QC*3	1108*CLP90	ALUMINUM	MG/KG-DRY	0.004
06/05/92	CCB*QC*3	1008*CLP90	BARIUM	MG/KG-DRY	0.0002
06/05/92	CCB*QC*3	1013*CLP90	BERYLLIUM	MG/KG-DRY	0.001
06/05/92	CCB*QC*3	917*CLP90	CALCIUM	MG/KG-DRY	0.004
06/05/92	CCB*QC*3	1028*CLP90	CADMIUM	MG/KG-DRY	ND
06/05/92	CCB*QC*3	1038*CLP90	COBALT	MG/KG-DRY	ND
06/05/92	CCB*QC*3	1029*CLP90	CHROMIUM	MG/KG-DRY	0.0008
06/05/92	CCB*QC*3	1043*CLP90	COPPER	MG/KG-DRY	ND
06/05/92	CCB*QC*3	1170*CLP90	IRON	MG/KG-DRY	0.006
06/05/92	CCB*QC*3	938*CLP90	POTASSIUM	MG/KG-DRY	0.182
06/05/92	CCB*QC*3	924*CLP90	MAGNESIUM	MG/KG-DRY	0.005
06/05/92	CCB*QC*3	1053*CLP90	MANGANESE	MG/KG-DRY	ND
06/05/92	CCB*QC*3	934*CLP90	SODIUM	MG/KG-DRY	0.016
06/05/92	CCB*QC*3	1068*CLP90	NICKEL	MG/KG-DRY	0.001
06/05/92	CCB*QC*3	1098*CLP90	ANTIMONY	MG/KG-DRY	ND
06/05/92	CCB*QC*3	1088*CLP90	VANADIUM	MG/KG-DRY	0.002
06/05/92	CCB*QC*3	1093*CLP90	ZINC	MG/KG-DRY	0.0003
06/05/92	CCB*QC*4	1078*CLP90	SILVER	MG/KG-DRY	ND

ESE BATCH : 628464

Continuing Calibration Blank Sample Summary

DATE	SAMPLE	STORET	PARAMETER	UNITS	FOUND
06/05/92	CCB*QC*4	1108*CLP90	ALUMINUM	MG/KG-DRY	ND
06/05/92	CCB*QC*4	1008*CLP90	BARIUM	MG/KG-DRY	ND
06/05/92	CCB*QC*4	1013*CLP90	BERYLLIUM	MG/KG-DRY	ND
06/05/92	CCB*QC*4	917*CLP90	CALCIUM	MG/KG-DRY	0.0003
/05/92	CCB*QC*4	1028*CLP90	CADMIUM	MG/KG-DRY	0.0002
'05/92	CCB*QC*4	1038*CLP90	COBALT	MG/KG-DRY	ND
06/05/92	CCB*QC*4	1029*CLP90	CHROMIUM	MG/KG-DRY	ND
06/05/92	CCB*QC*4	1043*CLP90	COPPER	MG/KG-DRY	ND
06/05/92	CCB*QC*4	1170*CLP90	IRON	MG/KG-DRY	0.006
06/05/92	CCB*QC*4	938*CLP90	POTASSIUM	MG/KG-DRY	0.096
06/05/92	CCB*QC*4	924*CLP90	MAGNESIUM	MG/KG-DRY	ND
06/05/92	CCB*QC*4	1053*CLP90	MANGANESE	MG/KG-DRY	ND
06/05/92	CCB*QC*4	934*CLP90	SODIUM	MG/KG-DRY	0.006
06/05/92	CCB*QC*4	1068*CLP90	NICKEL	MG/KG-DRY	0.004
06/05/92	CCB*QC*4	1098*CLP90	ANTIMONY	MG/KG-DRY	ND
06/05/92	CCB*QC*4	1088*CLP90	VANADIUM	MG/KG-DRY	ND
06/05/92	CCB*QC*4	1093*CLP90	ZINC	MG/KG-DRY	0.0001
06/05/92	CCB*QC*5	1078*CLP90	SILVER	MG/KG-DRY	0.001
06/05/92	CCB*QC*5	1108*CLP90	ALUMINUM	MG/KG-DRY	0.003
06/05/92	CCB*QC*5	1008*CLP90	BARIUM	MG/KG-DRY	ND
06/05/92	CCB*QC*5	1013*CLP90	BERYLLIUM	MG/KG-DRY	ND
06/05/92	CCB*QC*5	917*CLP90	CALCIUM	MG/KG-DRY	0.003
06/05/92	CCB*QC*5	1028*CLP90	CADMIUM	MG/KG-DRY	ND
06/05/92	CCB*QC*5	1038*CLP90	COBALT	MG/KG-DRY	ND
06/05/92	CCB*QC*5	1029*CLP90	CHROMIUM	MG/KG-DRY	0.0002
06/05/92	CCB*QC*5	1043*CLP90	COPPER	MG/KG-DRY	ND
06/05/92	CCB*QC*5	1170*CLP90	IRON	MG/KG-DRY	0.003
06/05/92	CCB*QC*5	938*CLP90	POTASSIUM	MG/KG-DRY	0.213
06/05/92	CCB*QC*5	924*CLP90	MAGNESIUM	MG/KG-DRY	0.018
06/05/92	CCB*QC*5	1053*CLP90	MANGANESE	MG/KG-DRY	ND
06/05/92	CCB*QC*5	934*CLP90	SODIUM	MG/KG-DRY	0.016
06/05/92	CCB*QC*5	1068*CLP90	NICKEL	MG/KG-DRY	0.004
06/05/92	CCB*QC*5	1098*CLP90	ANTIMONY	MG/KG-DRY	0.006
06/05/92	CCB*QC*5	1088*CLP90	VANADIUM	MG/KG-DRY	0.002
06/05/92	CCB*QC*5	1093*CLP90	ZINC	MG/KG-DRY	0.0001
06/05/92	CCB*QC*6	1078*CLP90	SILVER	MG/KG-DRY	ND
06/05/92	CCB*QC*6	1108*CLP90	ALUMINUM	MG/KG-DRY	ND
06/05/92	CCB*QC*6	1008*CLP90	BARIUM	MG/KG-DRY	ND
06/05/92	CCB*QC*6	1013*CLP90	BERYLLIUM	MG/KG-DRY	ND
6/05/92	CCB*QC*6	917*CLP90	CALCIUM	MG/KG-DRY	0.004
/05/92	CCB*QC*6	1028*CLP90	CADMIUM	MG/KG-DRY	0.0009
/05/92	CCB*QC*6	1038*CLP90	COBALT	MG/KG-DRY	0.0009
06/05/92	CCB*QC*6	1029*CLP90	CHROMIUM	MG/KG-DRY	ND
06/05/92	CCB*QC*6	1043*CLP90	COPPER	MG/KG-DRY	ND
06/05/92	CCB*QC*6	1170*CLP90	IRON	MG/KG-DRY	0.006
06/05/92	CCB*QC*6	938*CLP90	POTASSIUM	MG/KG-DRY	0.034
06/05/92	CCB*QC*6	924*CLP90	MAGNESIUM	MG/KG-DRY	ND
06/05/92	CCB*QC*6	1053*CLP90	MANGANESE	MG/KG-DRY	ND
06/05/92	CCB*QC*6	934*CLP90	SODIUM	MG/KG-DRY	0.011
06/05/92	CCB*QC*6	1068*CLP90	NICKEL	MG/KG-DRY	ND
06/05/92	CCB*QC*6	1098*CLP90	ANTIMONY	MG/KG-DRY	ND
06/05/92	CCB*QC*6	1088*CLP90	VANADIUM	MG/KG-DRY	ND
06/05/92	CCB*QC*6	1093*CLP90	ZINC	MG/KG-DRY	0.0008

Initial Calibration Verification Sample Summary

DATE	SAMPLE	STORET	PARAMETER	UNITS	TARGET	FOUND	%RECV	RECV CRIT
06/05/92	ICV*ICAP7*1	1078*CLP90	SILVER	MG/KG-DRY	1.00	1.00	100.0	90-110
06/05/92	ICV*ICAP7*1	1108*CLP90	ALUMINUM	MG/KG-DRY	1.00	1.02	102	90-110
06/05/92	ICV*ICAP7*1	1008*CLP90	BARIUM	MG/KG-DRY	1.00	1.04	104	90-110
06/05/92	ICV*ICAP7*1	1013*CLP90	BERYLLIUM	MG/KG-DRY		ND		90-110
06/05/92	ICV*ICAP7*1	917*CLP90	CALCIUM	MG/KG-DRY		ND		90-110
06/05/92	ICV*ICAP7*1	1028*CLP90	CADMIUM	MG/KG-DRY		ND		90-110
06/05/92	ICV*ICAP7*1	1038*CLP90	COBALT	MG/KG-DRY		ND		90-110
06/05/92	ICV*ICAP7*1	1029*CLP90	CHROMIUM	MG/KG-DRY		ND		90-110
06/05/92	ICV*ICAP7*1	1043*CLP90	COPPER	MG/KG-DRY		ND		90-110
06/05/92	ICV*ICAP7*1	1170*CLP90	IRON	MG/KG-DRY		ND		90-110
06/05/92	ICV*ICAP7*1	938*CLP90	POTASSIUM	MG/KG-DRY	10.00	10.2	102	90-110
06/05/92	ICV*ICAP7*1	924*CLP90	MAGNESIUM	MG/KG-DRY		ND		90-110
06/05/92	ICV*ICAP7*1	1053*CLP90	MANGANESE	MG/KG-DRY		ND		90-110
06/05/92	ICV*ICAP7*1	934*CLP90	SODIUM	MG/KG-DRY	1.00	1.04	104	90-110
06/05/92	ICV*ICAP7*1	1068*CLP90	NICKEL	MG/KG-DRY		ND		90-110
06/05/92	ICV*ICAP7*1	1098*CLP90	ANTIMONY	MG/KG-DRY		ND		90-110
06/05/92	ICV*ICAP7*1	1088*CLP90	VANADIUM	MG/KG-DRY		ND		90-110
6/05/92	ICV*ICAP7*1	1093*CLP90	ZINC	MG/KG-DRY		ND		90-110
/05/92	ICV*ICAP19*1	1078*CLP90	SILVER	MG/KG-DRY		ND		90-110
6/05/92	ICV*ICAP19*1	1108*CLP90	ALUMINUM	MG/KG-DRY		ND		90-110

ESE BATCH : G28464

Initial Calibration Verification Sample Summary

DATE	SAMPLE	STORET	PARAMETER	UNITS	TARGET	FOUND	%RECV	RECV CRIT
06/05/92	ICV*ICAP19*1	1008*CLP90	BARIUM	MG/KG-DRY		ND		90-110
06/05/92	ICV*ICAP19*1	1013*CLP90	BERYLLIUM	MG/KG-DRY	1.00	1.00	100.0	90-110
06/05/92	ICV*ICAP19*1	917*CLP90	CALCIUM	MG/KG-DRY	1.00	1.06	106	90-110
06/05/92	ICV*ICAP19*1	1028*CLP90	CADMIUM	MG/KG-DRY	1.00	1.01	101	90-110
06/05/92	ICV*ICAP19*1	1038*CLP90	COBALT	MG/KG-DRY	1.00	1.01	101	90-110
06/05/92	ICV*ICAP19*1	1029*CLP90	CHROMIUM	MG/KG-DRY	1.00	1.02	102	90-110
06/05/92	ICV*ICAP19*1	1043*CLP90	COPPER	MG/KG-DRY	1.00	1.02	102	90-110
06/05/92	ICV*ICAP19*1	1170*CLP90	IRON	MG/KG-DRY	1.00	1.04	104	90-110
06/05/92	ICV*ICAP19*1	938*CLP90	POTASSIUM	MG/KG-DRY		ND		90-110
06/05/92	ICV*ICAP19*1	924*CLP90	MAGNESIUM	MG/KG-DRY	1.00	1.05	105	90-110
06/05/92	ICV*ICAP19*1	1053*CLP90	MANGANESE	MG/KG-DRY	1.00	1.02	102	90-110
06/05/92	ICV*ICAP19*1	934*CLP90	SODIUM	MG/KG-DRY		ND		90-110
06/05/92	ICV*ICAP19*1	1068*CLP90	NICKEL	MG/KG-DRY	1.00	1.03	103	90-110
06/05/92	ICV*ICAP19*1	1098*CLP90	ANTIMONY	MG/KG-DRY	1.0	1.0	100	90-110
06/05/92	ICV*ICAP19*1	1088*CLP90	VANADIUM	MG/KG-DRY	1.00	1.02	102	90-110
06/05/92	ICV*ICAP19*1	1093*CLP90	ZINC	MG/KG-DRY	1.00	1.02	102	90-110

Continuing Calibration Verification Sample Summary

DATE	SAMPLE	STORET	PARAMETER	UNITS	TARGET	FOUND	%RECV	RECV CRIT
06/05/92	CCV*QC*1	1078*CLP90	SILVER	MG/KG-DRY	0.500	0.501	100	90-110
06/05/92	CCV*QC*1	1108*CLP90	ALUMINUM	MG/KG-DRY	5.00	5.10	102	90-110
06/05/92	CCV*QC*1	1008*CLP90	BARIUM	MG/KG-DRY	0.500	0.503	101	90-110
06/05/92	CCV*QC*1	1013*CLP90	BERYLLIUM	MG/KG-DRY	0.500	0.516	103	90-110
06/05/92	CCV*QC*1	917*CLP90	CALCIUM	MG/KG-DRY	5.00	5.08	102	90-110
06/05/92	CCV*QC*1	1028*CLP90	CADMIUM	MG/KG-DRY	0.500	0.501	100	90-110
06/05/92	CCV*QC*1	1038*CLP90	COBALT	MG/KG-DRY	0.500	0.500	100.0	90-110
06/05/92	CCV*QC*1	1029*CLP90	CHROMIUM	MG/KG-DRY	0.500	0.504	101	90-110
06/05/92	CCV*QC*1	1043*CLP90	COPPER	MG/KG-DRY	0.500	0.509	102	90-110
06/05/92	CCV*QC*1	1170*CLP90	IRON	MG/KG-DRY	5.00	5.14	103	90-110
06/05/92	CCV*QC*1	938*CLP90	POTASSIUM	MG/KG-DRY	5.00	5.14	103	90-110
06/05/92	CCV*QC*1	924*CLP90	MAGNESIUM	MG/KG-DRY	5.00	5.11	102	90-110
06/05/92	CCV*QC*1	1053*CLP90	MANGANESE	MG/KG-DRY	0.500	0.504	101	90-110
06/05/92	CCV*QC*1	934*CLP90	SODIUM	MG/KG-DRY	5.00	4.94	98.8	90-110
06/05/92	CCV*QC*1	1068*CLP90	NICKEL	MG/KG-DRY	0.500	0.509	102	90-110
06/05/92	CCV*QC*1	1098*CLP90	ANTIMONY	MG/KG-DRY	0.5	0.5	100	90-110
06/05/92	CCV*QC*1	1088*CLP90	VANADIUM	MG/KG-DRY	0.500	0.509	102	90-110
06/05/92	CCV*QC*1	1093*CLP90	ZINC	MG/KG-DRY	0.500	0.489	97.8	90-110
06/05/92	CCV*QC*2	1078*CLP90	SILVER	MG/KG-DRY	0.500	0.506	101	90-110
06/05/92	CCV*QC*2	1108*CLP90	ALUMINUM	MG/KG-DRY	5.00	5.23	105	90-110
06/05/92	CCV*QC*2	1008*CLP90	BARIUM	MG/KG-DRY	0.500	0.516	103	90-110
06/05/92	CCV*QC*2	1013*CLP90	BERYLLIUM	MG/KG-DRY	0.500	0.521	104	90-110
06/05/92	CCV*QC*2	917*CLP90	CALCIUM	MG/KG-DRY	5.00	5.14	103	90-110
06/05/92	CCV*QC*2	1028*CLP90	CADMIUM	MG/KG-DRY	0.500	0.503	101	90-110
06/05/92	CCV*QC*2	1038*CLP90	COBALT	MG/KG-DRY	0.500	0.505	101	90-110
06/05/92	CCV*QC*2	1029*CLP90	CHROMIUM	MG/KG-DRY	0.500	0.512	102	90-110
06/05/92	CCV*QC*2	1043*CLP90	COPPER	MG/KG-DRY	0.500	0.519	104	90-110
06/05/92	CCV*QC*2	1170*CLP90	IRON	MG/KG-DRY	5.00	5.21	104	90-110
06/05/92	CCV*QC*2	938*CLP90	POTASSIUM	MG/KG-DRY	5.00	4.89	97.8	90-110
06/05/92	CCV*QC*2	924*CLP90	MAGNESIUM	MG/KG-DRY	5.00	5.25	105	90-110
06/05/92	CCV*QC*2	1053*CLP90	MANGANESE	MG/KG-DRY	0.500	0.512	102	90-110
06/05/92	CCV*QC*2	934*CLP90	SODIUM	MG/KG-DRY	5.00	5.11	102	90-110
06/05/92	CCV*QC*2	1068*CLP90	NICKEL	MG/KG-DRY	0.500	0.518	104	90-110
06/05/92	CCV*QC*2	1098*CLP90	ANTIMONY	MG/KG-DRY	0.5	0.5	100	90-110
06/05/92	CCV*QC*2	1088*CLP90	VANADIUM	MG/KG-DRY	0.500	0.520	104	90-110
06/05/92	CCV*QC*2	1093*CLP90	ZINC	MG/KG-DRY	0.500	0.495	99.0	90-110
06/05/92	CCV*QC*3	1078*CLP90	SILVER	MG/KG-DRY	0.500	0.503	101	90-110
06/05/92	CCV*QC*3	1108*CLP90	ALUMINUM	MG/KG-DRY	5.00	5.12	102	90-110
06/05/92	CCV*QC*3	1008*CLP90	BARIUM	MG/KG-DRY	0.500	0.518	104	90-110
06/05/92	CCV*QC*3	1013*CLP90	BERYLLIUM	MG/KG-DRY	0.500	0.520	104	90-110
06/05/92	CCV*QC*3	917*CLP90	CALCIUM	MG/KG-DRY	5.00	5.18	104	90-110
06/05/92	CCV*QC*3	1028*CLP90	CADMIUM	MG/KG-DRY	0.500	0.499	99.8	90-110
06/05/92	CCV*QC*3	1038*CLP90	COBALT	MG/KG-DRY	0.500	0.510	102	90-110
06/05/92	CCV*QC*3	1029*CLP90	CHROMIUM	MG/KG-DRY	0.500	0.507	101	90-110
06/05/92	CCV*QC*3	1043*CLP90	COPPER	MG/KG-DRY	0.500	0.515	103	90-110
06/05/92	CCV*QC*3	1170*CLP90	IRON	MG/KG-DRY	5.00	5.17	103	90-110
06/05/92	CCV*QC*3	938*CLP90	POTASSIUM	MG/KG-DRY	5.00	4.94	98.8	90-110
06/05/92	CCV*QC*3	924*CLP90	MAGNESIUM	MG/KG-DRY	5.00	5.11	102	90-110
06/05/92	CCV*QC*3	1053*CLP90	MANGANESE	MG/KG-DRY	0.500	0.507	101	90-110
06/05/92	CCV*QC*3	934*CLP90	SODIUM	MG/KG-DRY	5.00	5.16	103	90-110
06/05/92	CCV*QC*3	1068*CLP90	NICKEL	MG/KG-DRY	0.500	0.509	102	90-110
06/05/92	CCV*QC*3	1098*CLP90	ANTIMONY	MG/KG-DRY	0.5	0.5	100	90-110
06/05/92	CCV*QC*3	1088*CLP90	VANADIUM	MG/KG-DRY	0.500	0.512	102	90-110
06/05/92	CCV*QC*3	1093*CLP90	ZINC	MG/KG-DRY	0.500	0.499	99.8	90-110
06/05/92	CCV*QC*4	1078*CLP90	SILVER	MG/KG-DRY	0.500	0.504	101	90-110
06/05/92	CCV*QC*4	1108*CLP90	ALUMINUM	MG/KG-DRY	5.00	5.15	103	90-110
06/05/92	CCV*QC*4	1008*CLP90	BARIUM	MG/KG-DRY	0.500	0.516	103	90-110

ESE BATCH : G28464

Continuing Calibration Verification Sample Summary

DATE	SAMPLE	STORET	PARAMETER	UNITS	TARGET	FOUND	%RECV	RECV CRIT
06/05/92	CCV*QC*4	1013*CLP90	BERYLLIUM	MG/KG-DRY	0.500	0.517	103	90-110
06/05/92	CCV*QC*4	917*CLP90	CALCIUM	MG/KG-DRY	5.00	5.21	104	90-110
06/05/92	CCV*QC*4	1028*CLP90	CADMIUM	MG/KG-DRY	0.500	0.505	101	90-110
06/05/92	CCV*QC*4	1038*CLP90	COBALT	MG/KG-DRY	0.500	0.511	102	90-110
/05/92	CCV*QC*4	1029*CLP90	CHROMIUM	MG/KG-DRY	0.500	0.511	102	90-110
/05/92	CCV*QC*4	1043*CLP90	COPPER	MG/KG-DRY	0.500	0.514	103	90-110
06/05/92	CCV*QC*4	1170*CLP90	IRON	MG/KG-DRY	5.00	5.19	104	90-110
06/05/92	CCV*QC*4	938*CLP90	POTASSIUM	MG/KG-DRY	5.00	5.22	104	90-110
06/05/92	CCV*QC*4	924*CLP90	MAGNESIUM	MG/KG-DRY	5.00	5.16	103	90-110
06/05/92	CCV*QC*4	1053*CLP90	MANGANESE	MG/KG-DRY	0.500	0.509	102	90-110
06/05/92	CCV*QC*4	934*CLP90	SODIUM	MG/KG-DRY	5.00	5.17	103	90-110
06/05/92	CCV*QC*4	1068*CLP90	NICKEL	MG/KG-DRY	0.500	0.510	102	90-110
06/05/92	CCV*QC*4	1098*CLP90	ANTIMONY	MG/KG-DRY	0.5	0.5	100	90-110
06/05/92	CCV*QC*4	1088*CLP90	VANADIUM	MG/KG-DRY	0.500	0.516	103	90-110
06/05/92	CCV*QC*4	1093*CLP90	ZINC	MG/KG-DRY	0.500	0.503	101	90-110
06/05/92	CCV*QC*5	1078*CLP90	SILVER	MG/KG-DRY	0.500	0.509	102	90-110
06/05/92	CCV*QC*5	1108*CLP90	ALUMINUM	MG/KG-DRY	5.00	5.21	104	90-110
06/05/92	CCV*QC*5	1008*CLP90	BARIUM	MG/KG-DRY	0.500	0.526	105	90-110
06/05/92	CCV*QC*5	1013*CLP90	BERYLLIUM	MG/KG-DRY	0.500	0.527	105	90-110
06/05/92	CCV*QC*5	917*CLP90	CALCIUM	MG/KG-DRY	5.00	5.23	105	90-110
06/05/92	CCV*QC*5	1028*CLP90	CADMIUM	MG/KG-DRY	0.500	0.510	102	90-110
06/05/92	CCV*QC*5	1038*CLP90	COBALT	MG/KG-DRY	0.500	0.515	103	90-110
06/05/92	CCV*QC*5	1029*CLP90	CHROMIUM	MG/KG-DRY	0.500	0.509	102	90-110
06/05/92	CCV*QC*5	1043*CLP90	COPPER	MG/KG-DRY	0.500	0.521	104	90-110
06/05/92	CCV*QC*5	1170*CLP90	IRON	MG/KG-DRY	5.00	5.23	105	90-110
06/05/92	CCV*QC*5	938*CLP90	POTASSIUM	MG/KG-DRY	5.00	5.19	104	90-110
06/05/92	CCV*QC*5	924*CLP90	MAGNESIUM	MG/KG-DRY	5.00	5.16	103	90-110
06/05/92	CCV*QC*5	1053*CLP90	MANGANESE	MG/KG-DRY	0.500	0.513	103	90-110
06/05/92	CCV*QC*5	934*CLP90	SODIUM	MG/KG-DRY	5.00	5.27	105	90-110
06/05/92	CCV*QC*5	1068*CLP90	NICKEL	MG/KG-DRY	0.500	0.517	103	90-110
06/05/92	CCV*QC*5	1098*CLP90	ANTIMONY	MG/KG-DRY	0.5	0.5	100	90-110
06/05/92	CCV*QC*5	1088*CLP90	VANADIUM	MG/KG-DRY	0.500	0.519	104	90-110
06/05/92	CCV*QC*5	1093*CLP90	ZINC	MG/KG-DRY	0.500	0.504	101	90-110
06/05/92	CCV*QC*6	1078*CLP90	SILVER	MG/KG-DRY	0.500	0.514	103	90-110
06/05/92	CCV*QC*6	1108*CLP90	ALUMINUM	MG/KG-DRY	5.00	5.20	104	90-110
06/05/92	CCV*QC*6	1008*CLP90	BARIUM	MG/KG-DRY	0.500	0.523	105	90-110
06/05/92	CCV*QC*6	1013*CLP90	BERYLLIUM	MG/KG-DRY	0.500	0.530	106	90-110
06/05/92	CCV*QC*6	917*CLP90	CALCIUM	MG/KG-DRY	5.00	5.27	105	90-110
06/05/92	CCV*QC*6	1028*CLP90	CADMIUM	MG/KG-DRY	0.500	0.514	103	90-110
/05/92	CCV*QC*6	1038*CLP90	COBALT	MG/KG-DRY	0.500	0.518	104	90-110
/05/92	CCV*QC*6	1029*CLP90	CHROMIUM	MG/KG-DRY	0.500	0.514	103	90-110
/05/92	CCV*QC*6	1043*CLP90	COPPER	MG/KG-DRY	0.500	0.519	104	90-110
06/05/92	CCV*QC*6	1170*CLP90	IRON	MG/KG-DRY	5.00	5.23	105	90-110
06/05/92	CCV*QC*6	938*CLP90	POTASSIUM	MG/KG-DRY	5.00	5.29	106	90-110
06/05/92	CCV*QC*6	924*CLP90	MAGNESIUM	MG/KG-DRY	5.00	5.20	104	90-110
06/05/92	CCV*QC*6	1053*CLP90	MANGANESE	MG/KG-DRY	0.500	0.515	103	90-110
06/05/92	CCV*QC*6	934*CLP90	SODIUM	MG/KG-DRY	5.00	5.25	105	90-110
06/05/92	CCV*QC*6	1068*CLP90	NICKEL	MG/KG-DRY	0.500	0.519	104	90-110
06/05/92	CCV*QC*6	1098*CLP90	ANTIMONY	MG/KG-DRY	0.5	0.5	100	90-110
06/05/92	CCV*QC*6	1088*CLP90	VANADIUM	MG/KG-DRY	0.500	0.521	104	90-110
06/05/92	CCV*QC*6	1093*CLP90	ZINC	MG/KG-DRY	0.500	0.510	102	90-110
06/05/92	CCV*QC*7	1078*CLP90	SILVER	MG/KG-DRY	0.500	0.512	102	90-110
06/05/92	CCV*QC*7	1108*CLP90	ALUMINUM	MG/KG-DRY	5.00	5.25	105	90-110
06/05/92	CCV*QC*7	1008*CLP90	BARIUM	MG/KG-DRY	0.500	0.530	106	90-110
06/05/92	CCV*QC*7	1013*CLP90	BERYLLIUM	MG/KG-DRY	0.500	0.529	106	90-110
06/05/92	CCV*QC*7	917*CLP90	CALCIUM	MG/KG-DRY	5.00	5.29	106	90-110
06/05/92	CCV*QC*7	1028*CLP90	CADMIUM	MG/KG-DRY	0.500	0.514	103	90-110
06/05/92	CCV*QC*7	1038*CLP90	COBALT	MG/KG-DRY	0.500	0.518	104	90-110
06/05/92	CCV*QC*7	1029*CLP90	CHROMIUM	MG/KG-DRY	0.500	0.515	103	90-110
06/05/92	CCV*QC*7	1043*CLP90	COPPER	MG/KG-DRY	0.500	0.528	106	90-110
06/05/92	CCV*QC*7	1170*CLP90	IRON	MG/KG-DRY	5.00	5.27	105	90-110
06/05/92	CCV*QC*7	938*CLP90	POTASSIUM	MG/KG-DRY	5.00	4.98	99.6	90-110
06/05/92	CCV*QC*7	924*CLP90	MAGNESIUM	MG/KG-DRY	5.00	5.23	105	90-110
06/05/92	CCV*QC*7	1053*CLP90	MANGANESE	MG/KG-DRY	0.500	0.516	103	90-110
06/05/92	CCV*QC*7	934*CLP90	SODIUM	MG/KG-DRY	5.00	5.31	106	90-110
06/05/92	CCV*QC*7	1068*CLP90	NICKEL	MG/KG-DRY	0.500	0.523	105	90-110
06/05/92	CCV*QC*7	1098*CLP90	ANTIMONY	MG/KG-DRY	0.5	0.5	100	90-110
06/05/92	CCV*QC*7	1088*CLP90	VANADIUM	MG/KG-DRY	0.500	0.524	105	90-110
06/05/92	CCV*QC*7	1093*CLP90	ZINC	MG/KG-DRY	0.500	0.509	102	90-110

Method Blank Sample Summary

DATE	SAMPLE	STORET	PARAMETER	UNITS	FOUND
06/05/92	MB*QC*1	1078*CLP90	SILVER	MG/KG-DRY	ND
/05/92	MB*QC*1	1108*CLP90	ALUMINUM	MG/KG-DRY	ND
/05/92	MB*QC*1	1008*CLP90	BARIUM	MG/KG-DRY	0.004
06/05/92	MB*QC*1	1013*CLP90	BERYLLIUM	MG/KG-DRY	ND

ESE BATCH : 026404

Method Blank Sample Summary

DATE	SAMPLE	STORET	PARAMETER	UNITS	FOUND
06/05/92	MB*QC*1	917*CLP90	CALCIUM	MG/KG-DRY	0.101
06/05/92	MB*QC*1	1028*CLP90	CADMIUM	MG/KG-DRY	ND
06/05/92	MB*QC*1	1038*CLP90	COBALT	MG/KG-DRY	ND
06/05/92	MB*QC*1	1029*CLP90	CHROMIUM	MG/KG-DRY	ND
06/05/92	MB*QC*1	1043*CLP90	COPPER	MG/KG-DRY	ND
06/05/92	MB*QC*1	1170*CLP90	IRON	MG/KG-DRY	ND
06/05/92	MB*QC*1	938*CLP90	POTASSIUM	MG/KG-DRY	ND
06/05/92	MB*QC*1	924*CLP90	MAGNESIUM	MG/KG-DRY	ND
06/05/92	MB*QC*1	1053*CLP90	MANGANESE	MG/KG-DRY	ND
06/05/92	MB*QC*1	934*CLP90	SODIUM	MG/KG-DRY	0.116
06/05/92	MB*QC*1	1068*CLP90	NICKEL	MG/KG-DRY	ND
06/05/92	MB*QC*1	1098*CLP90	ANTIMONY	MG/KG-DRY	ND
06/05/92	MB*QC*1	1088*CLP90	VANADIUM	MG/KG-DRY	ND
06/05/92	MB*QC*1	1093*CLP90	ZINC	MG/KG-DRY	0.011
06/05/92	MB*QC*2	1078*CLP90	SILVER	MG/KG-DRY	ND
06/05/92	MB*QC*2	1108*CLP90	ALUMINUM	MG/KG-DRY	ND
06/05/92	MB*QC*2	1008*CLP90	BARIUM	MG/KG-DRY	0.004
06/05/92	MB*QC*2	1013*CLP90	BERYLLIUM	MG/KG-DRY	ND
06/05/92	MB*QC*2	917*CLP90	CALCIUM	MG/KG-DRY	0.102
06/05/92	MB*QC*2	1028*CLP90	CADMIUM	MG/KG-DRY	ND
06/05/92	MB*QC*2	1038*CLP90	COBALT	MG/KG-DRY	ND
06/05/92	MB*QC*2	1029*CLP90	CHROMIUM	MG/KG-DRY	ND
06/05/92	MB*QC*2	1043*CLP90	COPPER	MG/KG-DRY	ND
06/05/92	MB*QC*2	1170*CLP90	IRON	MG/KG-DRY	ND
06/05/92	MB*QC*2	938*CLP90	POTASSIUM	MG/KG-DRY	ND
06/05/92	MB*QC*2	924*CLP90	MAGNESIUM	MG/KG-DRY	ND
06/05/92	MB*QC*2	1053*CLP90	MANGANESE	MG/KG-DRY	ND
06/05/92	MB*QC*2	934*CLP90	SODIUM	MG/KG-DRY	0.109
06/05/92	MB*QC*2	1068*CLP90	NICKEL	MG/KG-DRY	ND
06/05/92	MB*QC*2	1098*CLP90	ANTIMONY	MG/KG-DRY	ND
06/05/92	MB*QC*2	1088*CLP90	VANADIUM	MG/KG-DRY	ND
06/05/92	MB*QC*2	1093*CLP90	ZINC	MG/KG-DRY	0.010

Laboratory Control Sample Summary

DATE	SAMPLE	STORET	PARAMETER	%RECV	RECV CRIT	UNITS	TARGET	FOUND
06/05/92	LCS*QC*1	1078*CLP90	SILVER	87.6	80-120	MG/KG-DRY	25.0	21.9
06/05/92	LCS*QC*1	1108*CLP90	ALUMINUM	80.7	80-120	MG/KG-DRY	9510	7670
06/05/92	LCS*QC*1	1008*CLP90	BARIUM	99.1	80-120	MG/KG-DRY	92.0	91.2
06/05/92	LCS*QC*1	1013*CLP90	BERYLLIUM	91.6	80-120	MG/KG-DRY	25.0	22.9
06/05/92	LCS*QC*1	917*CLP90	CALCIUM	82.6	80-120	MG/KG-DRY	7430	6140
06/05/92	LCS*QC*1	1028*CLP90	CADMIUM	88.8	80-120	MG/KG-DRY	116	103
06/05/92	LCS*QC*1	1038*CLP90	COBALT	86.7	80-120	MG/KG-DRY	81.0	70.2
06/05/92	LCS*QC*1	1029*CLP90	CHROMIUM	86.4	80-120	MG/KG-DRY	87.0	75.2
06/05/92	LCS*QC*1	1043*CLP90	COPPER	74.8	80-120	MG/KG-DRY	93.0	69.6
06/05/92	LCS*QC*1	1170*CLP90	IRON	90.0	80-120	MG/KG-DRY	13000	11700
06/05/92	LCS*QC*1	938*CLP90	POTASSIUM	79.5	80-120	MG/KG-DRY	3560	2830
06/05/92	LCS*QC*1	924*CLP90	MAGNESIUM	88.3	80-120	MG/KG-DRY	3500	3090
06/05/92	LCS*QC*1	1053*CLP90	MANGANESE	88.2	80-120	MG/KG-DRY	466	411
06/05/92	LCS*QC*1	934*CLP90	SODIUM	126.7	80-120	MG/KG-DRY	420	532
06/05/92	LCS*QC*1	1068*CLP90	NICKEL	93.5	80-120	MG/KG-DRY	108	101
06/05/92	LCS*QC*1	1098*CLP90	ANTIMONY	26	80-120	MG/KG-DRY	57	15
06/05/92	LCS*QC*1	1088*CLP90	VANADIUM	82.6	80-120	MG/KG-DRY	97.0	80.1
06/05/92	LCS*QC*1	1093*CLP90	ZINC	92.0	80-120	MG/KG-DRY	374	344
06/05/92	LCS*QC*2	1078*CLP90	SILVER	88.4	80-120	MG/KG-DRY	25.0	22.1
06/05/92	LCS*QC*2	1108*CLP90	ALUMINUM	81.2	80-120	MG/KG-DRY	9510	7720
06/05/92	LCS*QC*2	1008*CLP90	BARIUM	101.3	80-120	MG/KG-DRY	92.0	93.2
06/05/92	LCS*QC*2	1013*CLP90	BERYLLIUM	93.2	80-120	MG/KG-DRY	25.0	23.3
06/05/92	LCS*QC*2	917*CLP90	CALCIUM	80.8	80-120	MG/KG-DRY	7430	6000
06/05/92	LCS*QC*2	1028*CLP90	CADMIUM	88.8	80-120	MG/KG-DRY	116	103
06/05/92	LCS*QC*2	1038*CLP90	COBALT	86.9	80-120	MG/KG-DRY	81.0	70.4
06/05/92	LCS*QC*2	1029*CLP90	CHROMIUM	88.0	80-120	MG/KG-DRY	87.0	76.6
06/05/92	LCS*QC*2	1043*CLP90	COPPER	77.2	80-120	MG/KG-DRY	93.0	71.8
06/05/92	LCS*QC*2	1170*CLP90	IRON	90.0	80-120	MG/KG-DRY	13000	11700
06/05/92	LCS*QC*2	938*CLP90	POTASSIUM	76.1	80-120	MG/KG-DRY	3560	2710
06/05/92	LCS*QC*2	924*CLP90	MAGNESIUM	88.0	80-120	MG/KG-DRY	3500	3080
06/05/92	LCS*QC*2	1053*CLP90	MANGANESE	88.0	80-120	MG/KG-DRY	466	410
06/05/92	LCS*QC*2	934*CLP90	SODIUM	123.3	80-120	MG/KG-DRY	420	518
06/05/92	LCS*QC*2	1068*CLP90	NICKEL	94.4	80-120	MG/KG-DRY	108	102
06/05/92	LCS*QC*2	1098*CLP90	ANTIMONY	23	80-120	MG/KG-DRY	57	13
06/05/92	LCS*QC*2	1088*CLP90	VANADIUM	83.5	80-120	MG/KG-DRY	97.0	81.0
06/05/92	LCS*QC*2	1093*CLP90	ZINC	93.0	80-120	MG/KG-DRY	374	348

Sample Matrix Spike Recovery Summary

DATE	SAMPLE	STORET	PARAMETER	%RECV	RECV CRIT	UNSPIKED	UNITS	TARGET	FOUND	F
06/05/92	SPM*ALS2B*43	1078*CLP90	SILVER	89.1	75-125	0.095	MG/KG-DRY	11.9	10.6	

Sample Matrix Spike Recovery Summary

DATE	SAMPLE	STORET	PARAMETER	%RECV	RECV CRIT	UNSPIKED	UNITS	TARGET	FOUND	RPD
06/05/92	SPM*ALS2B*43	1108*CLP90	ALUMINUM	-63.0	75-125	6230	MG/KG-DRY	476	-300	
06/05/92	SPM*ALS2B*43	1008*CLP90	BARIUM	94.5	75-125	42.8	MG/KG-DRY	476	450	
06/05/92	SPM*ALS2B*43	1013*CLP90	BERYLLIUM	101.7	75-125	0.0	MG/KG-DRY	11.9	12.1	
06/05/92	SPM*ALS2B*43	917*CLP90	CALCIUM	67.6	80-120	3070	MG/KG-DRY	2380	1610	
06/05/92	SPM*ALS2B*43	1028*CLP90	CADMIUM	86.6	75-125	0.314	MG/KG-DRY	11.9	10.3	
06/05/92	SPM*ALS2B*43	1038*CLP90	COBALT	93.3	75-125	4.82	MG/KG-DRY	119	111	
06/05/92	SPM*ALS2B*43	1029*CLP90	CHROMIUM	88.2	75-125	33.1	MG/KG-DRY	47.6	42.0	
06/05/92	SPM*ALS2B*43	1043*CLP90	COPPER	94.6	75-125	6.73	MG/KG-DRY	59.6	56.4	
06/05/92	SPM*ALS2B*43	1170*CLP90	IRON	-25.2	80-120	9430	MG/KG-DRY	238	-60.0	
06/05/92	SPM*ALS2B*43	938*CLP90	POTASSIUM	85.7	80-120	967	MG/KG-DRY	2380	2040	
06/05/92	SPM*ALS2B*43	924*CLP90	MAGNESIUM	95.4	80-120	2450	MG/KG-DRY	2380	2270	
06/05/92	SPM*ALS2B*43	1053*CLP90	MANGANESE	93.3	75-125	84.0	MG/KG-DRY	119	111	
06/05/92	SPM*ALS2B*43	934*CLP90	SODIUM	96.6	80-120	397	MG/KG-DRY	2380	2300	
06/05/92	SPM*ALS2B*43	1068*CLP90	NICKEL	89.9	75-125	29.2	MG/KG-DRY	119	107	
06/05/92	SPM*ALS2B*43	1098*CLP90	ANTIMONY	92	75-125	1.1	MG/KG-DRY	120	110	
06/05/92	SPM*ALS2B*43	1088*CLP90	VANADIUM	94.1	75-125	23.3	MG/KG-DRY	119	112	
06/05/92	SPM*ALS2B*43	1093*CLP90	ZINC	91.6	75-125	24.5	MG/KG-DRY	119	109	
06/05/92	SPM*ALS2B*81	1078*CLP90	SILVER	95.0	75-125	0.024	MG/KG-DRY	12.0	11.4	
06/05/92	SPM*ALS2B*81	1108*CLP90	ALUMINUM	338.2	75-125	4590	MG/KG-DRY	479	1620	
06/05/92	SPM*ALS2B*81	1008*CLP90	BARIUM	97.9	75-125	41.8	MG/KG-DRY	479	469	
06/05/92	SPM*ALS2B*81	1013*CLP90	BERYLLIUM	100.8	75-125	0.0	MG/KG-DRY	12.0	12.1	
06/05/92	SPM*ALS2B*81	917*CLP90	CALCIUM	117.5	80-120	1730	MG/KG-DRY	2400	2820	
06/05/92	SPM*ALS2B*81	1028*CLP90	CADMIUM	95.0	75-125	0.316	MG/KG-DRY	12.0	11.4	
06/05/92	SPM*ALS2B*81	1038*CLP90	COBALT	95.8	75-125	5.14	MG/KG-DRY	120	115	
06/05/92	SPM*ALS2B*81	1029*CLP90	CHROMIUM	101.3	75-125	26.9	MG/KG-DRY	47.9	48.5	
06/05/92	SPM*ALS2B*81	1043*CLP90	COPPER	97.2	75-125	5.71	MG/KG-DRY	59.9	58.2	
06/05/92	SPM*ALS2B*81	1170*CLP90	IRON	387.5	80-120	8870	MG/KG-DRY	240	930	
06/05/92	SPM*ALS2B*81	938*CLP90	POTASSIUM	92.1	80-120	988	MG/KG-DRY	2400	2210	
06/05/92	SPM*ALS2B*81	924*CLP90	MAGNESIUM	101.3	80-120	2740	MG/KG-DRY	2400	2430	
06/05/92	SPM*ALS2B*81	1053*CLP90	MANGANESE	98.3	75-125	99.1	MG/KG-DRY	120	118	
06/05/92	SPM*ALS2B*81	934*CLP90	SODIUM	97.5	80-120	667	MG/KG-DRY	2400	2340	
06/05/92	SPM*ALS2B*81	1068*CLP90	NICKEL	94.2	75-125	32.2	MG/KG-DRY	120	113	
06/05/92	SPM*ALS2B*81	1098*CLP90	ANTIMONY	92	75-125	1.4	MG/KG-DRY	120	110	
06/05/92	SPM*ALS2B*81	1088*CLP90	VANADIUM	99.2	75-125	16.7	MG/KG-DRY	120	119	
06/05/92	SPM*ALS2B*81	1093*CLP90	ZINC	92.5	75-125	23.1	MG/KG-DRY	120	111	

Replicate Analysis Sample Summary

DATE	SAMPLE	STORET	PARAMETER	UNITS	REP #1	REP #2	RPD	RPD CRIT
06/05/92	RP*ALS2B*43	1078*CLP90	SILVER	MG/KG-DRY	<1.13	<1.14	0.881	20
06/05/92	RP*ALS2B*43	1108*CLP90	ALUMINUM	MG/KG-DRY	6230	5680	9.24	20
06/05/92	RP*ALS2B*43	1008*CLP90	BARIUM	MG/KG-DRY	42.8	37.6	12.9	20
06/05/92	RP*ALS2B*43	1013*CLP90	BERYLLIUM	MG/KG-DRY	<0.591	<0.594	0.506	20
06/05/92	RP*ALS2B*43	917*CLP90	CALCIUM	MG/KG-DRY	3070	4310	33.6	20
06/05/92	RP*ALS2B*43	1028*CLP90	CADMIUM	MG/KG-DRY	<0.922	<0.926	0.433	20
06/05/92	RP*ALS2B*43	1038*CLP90	COBALT	MG/KG-DRY	4.82	4.45	7.98	20
06/05/92	RP*ALS2B*43	1029*CLP90	CHROMIUM	MG/KG-DRY	33.1	31.0	6.55	20
06/05/92	RP*ALS2B*43	1043*CLP90	COPPER	MG/KG-DRY	6.73	8.77	26.3	20
06/05/92	RP*ALS2B*43	1170*CLP90	IRON	MG/KG-DRY	9430	9360	0.745	20
06/05/92	RP*ALS2B*43	938*CLP90	POTASSIUM	MG/KG-DRY	967	952	1.56	20
06/05/92	RP*ALS2B*43	924*CLP90	MAGNESIUM	MG/KG-DRY	2450	2390	2.48	20
06/05/92	RP*ALS2B*43	1053*CLP90	MANGANESE	MG/KG-DRY	84.0	91.4	8.44	20
06/05/92	RP*ALS2B*43	934*CLP90	SODIUM	MG/KG-DRY	397	391	1.52	20
06/05/92	RP*ALS2B*43	1068*CLP90	NICKEL	MG/KG-DRY	29.2	26.1	11.2	20
06/05/92	RP*ALS2B*43	1098*CLP90	ANTIMONY	MG/KG-DRY	<8.9	<8.9	0.0	20
06/05/92	RP*ALS2B*43	1088*CLP90	VANADIUM	MG/KG-DRY	23.3	21.9	6.19	20
06/05/92	RP*ALS2B*43	1093*CLP90	ZINC	MG/KG-DRY	24.5	24.2	1.23	20
06/05/92	RP*ALS2B*81	1078*CLP90	SILVER	MG/KG-DRY	<1.16	<1.15	0.866	20
06/05/92	RP*ALS2B*81	1108*CLP90	ALUMINUM	MG/KG-DRY	4590	4850	5.51	20
06/05/92	RP*ALS2B*81	1008*CLP90	BARIUM	MG/KG-DRY	41.8	40.9	2.18	20
06/05/92	RP*ALS2B*81	1013*CLP90	BERYLLIUM	MG/KG-DRY	<0.603	<0.600	0.499	20
06/05/92	RP*ALS2B*81	917*CLP90	CALCIUM	MG/KG-DRY	1730	1920	10.4	20
06/05/92	RP*ALS2B*81	1028*CLP90	CADMIUM	MG/KG-DRY	<0.941	<0.935	0.640	20
06/05/92	RP*ALS2B*81	1038*CLP90	COBALT	MG/KG-DRY	5.14	5.06	1.57	20
06/05/92	RP*ALS2B*81	1029*CLP90	CHROMIUM	MG/KG-DRY	26.9	27.3	1.48	20
06/05/92	RP*ALS2B*81	1043*CLP90	COPPER	MG/KG-DRY	5.71	5.80	1.56	20
06/05/92	RP*ALS2B*81	1170*CLP90	IRON	MG/KG-DRY	8870	8840	0.339	20
06/05/92	RP*ALS2B*81	938*CLP90	POTASSIUM	MG/KG-DRY	988	1020	3.19	20
06/05/92	RP*ALS2B*81	924*CLP90	MAGNESIUM	MG/KG-DRY	2740	2710	1.10	20
06/05/92	RP*ALS2B*81	1053*CLP90	MANGANESE	MG/KG-DRY	99.1	97.9	1.22	20
06/05/92	RP*ALS2B*81	934*CLP90	SODIUM	MG/KG-DRY	667	641	3.98	20
06/05/92	RP*ALS2B*81	1068*CLP90	NICKEL	MG/KG-DRY	32.2	30.5	5.42	20
06/05/92	RP*ALS2B*81	1098*CLP90	ANTIMONY	MG/KG-DRY	<9.0	<9.0	0.0	20
06/05/92	RP*ALS2B*81	1088*CLP90	VANADIUM	MG/KG-DRY	16.7	17.0	1.78	20
06/05/92	RP*ALS2B*81	1093*CLP90	ZINC	MG/KG-DRY	23.1	22.5	2.63	20

ESE BATCH : 626464

Serial Dilution Sample Summary

DATE	SAMPLE	STORET	PARAMETER	UNITS	REP #1	REP #2	RPD	RPD CRIT

Serial Dilution Sample Summary

DATE	SAMPLE	STORET	PARAMETER	UNITS	REP #1	REP #2	RPD	RPD CRIT
06/05/92	SD*ALS2B*43	1078*CLP90	SILVER	MG/KG-DRY	0.095	ND	NC	10
06/05/92	SD*ALS2B*43	1108*CLP90	ALUMINUM	MG/KG-DRY	6230	6310	1.28	10
06/05/92	SD*ALS2B*43	1008*CLP90	BARIUM	MG/KG-DRY	42.8	43.5	1.62	10
06/05/92	SD*ALS2B*43	1013*CLP90	BERYLLIUM	MG/KG-DRY	0.0	ND	NC	10
06/05/92	SD*ALS2B*43	917*CLP90	CALCIUM	MG/KG-DRY	3070	3140	2.25	10
06/05/92	SD*ALS2B*43	1028*CLP90	CADMIUM	MG/KG-DRY	0.314	0.354	12.0	10
06/05/92	SD*ALS2B*43	1038*CLP90	COBALT	MG/KG-DRY	4.82	3.08	44.1	10
06/05/92	SD*ALS2B*43	1029*CLP90	CHROMIUM	MG/KG-DRY	33.1	34.5	4.14	10
06/05/92	SD*ALS2B*43	1043*CLP90	COPPER	MG/KG-DRY	6.73	6.90	2.49	10
06/05/92	SD*ALS2B*43	1170*CLP90	IRON	MG/KG-DRY	9430	9710	2.93	10
06/05/92	SD*ALS2B*43	938*CLP90	POTASSIUM	MG/KG-DRY	967	1100	12.9	10
06/05/92	SD*ALS2B*43	924*CLP90	MAGNESIUM	MG/KG-DRY	2450	2470	0.813	10
06/05/92	SD*ALS2B*43	1053*CLP90	MANGANESE	MG/KG-DRY	84.0	86.1	2.47	10
06/05/92	SD*ALS2B*43	934*CLP90	SODIUM	MG/KG-DRY	397	549	32.1	10
06/05/92	SD*ALS2B*43	1068*CLP90	NICKEL	MG/KG-DRY	29.2	33.9	14.9	10
06/05/92	SD*ALS2B*43	1098*CLP90	ANTIMONY	MG/KG-DRY	0.1	ND	NC	10
06/05/92	SD*ALS2B*43	1088*CLP90	VANADIUM	MG/KG-DRY	23.3	21.3	8.97	10
06/05/92	SD*ALS2B*43	1093*CLP90	ZINC	MG/KG-DRY	24.5	25.9	5.56	10
06/05/92	SD*ALS2B*81	1078*CLP90	SILVER	MG/KG-DRY	0.024	0.965	NC	10
06/05/92	SD*ALS2B*81	1108*CLP90	ALUMINUM	MG/KG-DRY	4590	4560	0.656	10
06/05/92	SD*ALS2B*81	1008*CLP90	BARIUM	MG/KG-DRY	41.8	41.5	0.720	10
06/05/92	SD*ALS2B*81	1013*CLP90	BERYLLIUM	MG/KG-DRY	0.0	ND	NC	10
06/05/92	SD*ALS2B*81	917*CLP90	CALCIUM	MG/KG-DRY	1730	1710	1.16	10
06/05/92	SD*ALS2B*81	1028*CLP90	CADMIUM	MG/KG-DRY	0.316	1.09	110	10
06/05/92	SD*ALS2B*81	1038*CLP90	COBALT	MG/KG-DRY	5.14	2.33	75.2	10
06/05/92	SD*ALS2B*81	1029*CLP90	CHROMIUM	MG/KG-DRY	26.9	24.9	7.72	10
06/05/92	SD*ALS2B*81	1043*CLP90	COPPER	MG/KG-DRY	5.71	4.37	26.6	10
06/05/92	SD*ALS2B*81	1170*CLP90	IRON	MG/KG-DRY	8870	8840	0.339	10
06/05/92	SD*ALS2B*81	938*CLP90	POTASSIUM	MG/KG-DRY	988	1460	38.6	10
06/05/92	SD*ALS2B*81	924*CLP90	MAGNESIUM	MG/KG-DRY	2740	2730	0.366	10
06/05/92	SD*ALS2B*81	1053*CLP90	MANGANESE	MG/KG-DRY	99.1	98.1	1.01	10
06/05/92	SD*ALS2B*81	934*CLP90	SODIUM	MG/KG-DRY	667	757	12.6	10
06/05/92	SD*ALS2B*81	1068*CLP90	NICKEL	MG/KG-DRY	32.2	33.5	3.96	10
06/05/92	SD*ALS2B*81	1098*CLP90	ANTIMONY	MG/KG-DRY	1.4	3.3	NC	10
06/05/92	SD*ALS2B*81	1088*CLP90	VANADIUM	MG/KG-DRY	16.7	16.2	3.04	10
06/05/92	SD*ALS2B*81	1093*CLP90	ZINC	MG/KG-DRY	23.1	24.0	3.82	10

ESE BATCH : G28464

Environmental Science and Engineering Analytical Services
Computer QC Checks

Batch No.: G28464 Analysis Date: 06/05/92 Analyst: JEFF MILLER

	Yes	"Exceptions" No	Comment / Corrective Action
Analysis holding time within criteria?	X		
ract holding time within criteria?	X		
ICB present?	X		
ICB within acceptance criteria?	X		
CCB present?	X		
CCB within acceptance criteria?	X		
ICV present?	X		
ICV within acceptance criteria?	X		
CCV present?	X		
CCV within acceptance criteria?	X		
Method blank present?	X		
Method blank within acceptance criteria?	X		
LCS present?	X		
LCS within acceptance criteria?		X	1043*CLP90 _____
			934*CLP90 _____
			1098*CLP90 _____
Sample matrix spike present?	X		
Sample matrix spike within acceptance criteria?		X	1108*CLP90 _____
Sample matrix spike duplicate present?		X	_____
Sample matrix spike duplicate within acceptance criteria?			
Sample replicate present?	X		
Sample replicate within acceptance criteria?		X	917*CLP90 _____
			1043*CLP90 _____
SD present?	X		
SD within acceptance criteria?	X		

Note: Any "NO" answer requires a comment.

OVERRIDE COMMENTS

PROB:LCS NOT WITHIN ACCEPTANCE CRITERIA.
EXPL:CURRENT CRITERIA IS BASED ON HISTORICAL SP DATA. HOWEVER, THIS IS A SOLID REFERENCE. RECOVERIES ARE WITHIN THE ADVISORY RANGE FOR THE LCS WHICH IS ACCEPTABLE.KWB/6/15/92

PROB:SAMPLE REPLICATE NOT WITHIN ACCEPTANCE CRITERIA.
EXPL:WITHIN CLP CRITERIA +/- 20% FOR SAMPLES > 5 TIMES CRDL.

ESE BATCH : G28708
CLASSIFICATION : TAL ICAP METALS, WIPE

STATUS : FINAL

METHOD BLANK CORRECTION METHOD : NONE

FIELD GRP	PROJECT NUMBER	PROJECT NAME	LAB COORDINATOR
ALS2B	3914042 0201	JMM/ALAMEDA CTO-121	JACKIE HARGROVE-ELLI

SAMPLE CODE	CLIENT ID	DATE ANALYZED	TIME ANALYZED
ALS2B*18	W05-05	06/15/92	11:27AM
ALS2B*19	W05-06	06/15/92	11:29AM
ALS2B*20	W05-07	06/15/92	11:32AM
ALS2B*21	W05-08	06/15/92	01:17PM
ALS2B*22	W05-09	06/15/92	01:23PM
ALS2B*26	W05-DUP	06/15/92	01:25PM

ESE BATCH : 028708

Initial Calibration Blank Summary

DATE	SAMPLE	STORET	PARAMETER	UNITS	FOUND
06/15/92	ICB*QC*1	99782*ICAP	VANADIUM,TOTAL	UG	ND
06/15/92	ICB*QC*1	99052*ICAP	SILVER	UG	0.0003
'15/92	ICB*QC*1	99035*ICAP	ALUMINIUM	UG	0.003
15/92	ICB*QC*1	99038*ICAP	BARIUM	UG	0.0002
/15/92	ICB*QC*1	99039*ICAP	BERYLLIUM	UG	0.001
06/15/92	ICB*QC*1	99041*ICAP	CALCIUM,TOTAL CA	UG	0.0003
06/15/92	ICB*QC*1	99776*ICAP	CADMIUM	UG	ND
06/15/92	ICB*QC*1	99042*ICAP	COBALT,TOTAL UG	UG	ND
06/15/92	ICB*QC*1	99778*ICAP	CHROMIUM	UG	ND
06/15/92	ICB*QC*1	99779*ICAP	COPPER	UG	0.001
06/15/92	ICB*QC*1	96597*ICAP	IRON	UG	0.002
06/15/92	ICB*QC*1	99044*ICAP	POTASSIUM,TOTAL K	UG	0.077
06/15/92	ICB*QC*1	99045*ICAP	MAGNESIUM,TOTAL	UG	0.009
06/15/92	ICB*QC*1	99046*ICAP	MANGANESE	UG	ND
06/15/92	ICB*QC*1	99053*ICAP	SODIUM,TOTAL NA	UG	0.010
06/15/92	ICB*QC*1	99777*ICAP	NICKEL	UG	0.0006
06/15/92	ICB*QC*1	99775*ICAP	LEAD	UG	0.010
06/15/92	ICB*QC*1	96599*ICAP	ANTIMONY	UG	ND
06/15/92	ICB*QC*1	99055*ICAP	THALLIUM	UG	0.022
06/15/92	ICB*QC*1	99780*ICAP	ZINC	UG	ND

Continuing Calibration Blank Sample Summary

DATE	SAMPLE	STORET	PARAMETER	UNITS	FOUND
06/15/92	CCB*QC*1	99782*ICAP	VANADIUM,TOTAL	UG	ND
06/15/92	CCB*QC*1	99052*ICAP	SILVER	UG	ND
06/15/92	CCB*QC*1	99035*ICAP	ALUMINIUM	UG	0.006
06/15/92	CCB*QC*1	99038*ICAP	BARIUM	UG	0.0008
06/15/92	CCB*QC*1	99039*ICAP	BERYLLIUM	UG	0.002
06/15/92	CCB*QC*1	99041*ICAP	CALCIUM,TOTAL CA	UG	0.007
06/15/92	CCB*QC*1	99776*ICAP	CADMIUM	UG	0.0002
06/15/92	CCB*QC*1	99042*ICAP	COBALT,TOTAL UG	UG	0.002
06/15/92	CCB*QC*1	99778*ICAP	CHROMIUM	UG	0.0007
06/15/92	CCB*QC*1	99779*ICAP	COPPER	UG	0.001
06/15/92	CCB*QC*1	96597*ICAP	IRON	UG	0.005
06/15/92	CCB*QC*1	99044*ICAP	POTASSIUM,TOTAL K	UG	ND
06/15/92	CCB*QC*1	99045*ICAP	MAGNESIUM,TOTAL	UG	0.020
'15/92	CCB*QC*1	99046*ICAP	MANGANESE	UG	ND
5/92	CCB*QC*1	99053*ICAP	SODIUM,TOTAL NA	UG	0.003
5/92	CCB*QC*1	99777*ICAP	NICKEL	UG	ND
06/15/92	CCB*QC*1	99775*ICAP	LEAD	UG	0.024
06/15/92	CCB*QC*1	96599*ICAP	ANTIMONY	UG	ND
06/15/92	CCB*QC*1	99055*ICAP	THALLIUM	UG	0.025
06/15/92	CCB*QC*1	99780*ICAP	ZINC	UG	0.002
06/15/92	CCB*QC*2	99782*ICAP	VANADIUM,TOTAL	UG	ND
06/15/92	CCB*QC*2	99052*ICAP	SILVER	UG	ND
06/15/92	CCB*QC*2	99035*ICAP	ALUMINIUM	UG	ND
06/15/92	CCB*QC*2	99038*ICAP	BARIUM	UG	ND
06/15/92	CCB*QC*2	99039*ICAP	BERYLLIUM	UG	0.001
06/15/92	CCB*QC*2	99041*ICAP	CALCIUM,TOTAL CA	UG	0.0008
06/15/92	CCB*QC*2	99776*ICAP	CADMIUM	UG	ND
06/15/92	CCB*QC*2	99042*ICAP	COBALT,TOTAL UG	UG	ND
06/15/92	CCB*QC*2	99778*ICAP	CHROMIUM	UG	ND
06/15/92	CCB*QC*2	99779*ICAP	COPPER	UG	0.0004
06/15/92	CCB*QC*2	96597*ICAP	IRON	UG	0.002
06/15/92	CCB*QC*2	99044*ICAP	POTASSIUM,TOTAL K	UG	ND
06/15/92	CCB*QC*2	99045*ICAP	MAGNESIUM,TOTAL	UG	ND
06/15/92	CCB*QC*2	99046*ICAP	MANGANESE	UG	ND
06/15/92	CCB*QC*2	99053*ICAP	SODIUM,TOTAL NA	UG	ND
06/15/92	CCB*QC*2	99777*ICAP	NICKEL	UG	ND
06/15/92	CCB*QC*2	99775*ICAP	LEAD	UG	0.010
06/15/92	CCB*QC*2	96599*ICAP	ANTIMONY	UG	ND
06/15/92	CCB*QC*2	99055*ICAP	THALLIUM	UG	0.008
06/15/92	CCB*QC*2	99780*ICAP	ZINC	UG	ND
06/15/92	CCB*QC*3	99782*ICAP	VANADIUM,TOTAL	UG	0.0008
06/15/92	CCB*QC*3	99052*ICAP	SILVER	UG	0.002
06/15/92	CCB*QC*3	99035*ICAP	ALUMINIUM	UG	0.006
06/15/92	CCB*QC*3	99038*ICAP	BARIUM	UG	0.0003
06/15/92	CCB*QC*3	99039*ICAP	BERYLLIUM	UG	0.002
06/15/92	CCB*QC*3	99041*ICAP	CALCIUM,TOTAL CA	UG	0.002
06/15/92	CCB*QC*3	99776*ICAP	CADMIUM	UG	ND
06/15/92	CCB*QC*3	99042*ICAP	COBALT,TOTAL UG	UG	0.0009
'5/92	CCB*QC*3	99778*ICAP	CHROMIUM	UG	ND
/92	CCB*QC*3	99779*ICAP	COPPER	UG	ND
5/92	CCB*QC*3	96597*ICAP	IRON	UG	0.003
06/15/92	CCB*QC*3	99044*ICAP	POTASSIUM,TOTAL K	UG	0.408
06/15/92	CCB*QC*3	99045*ICAP	MAGNESIUM,TOTAL	UG	0.030

ESE BATCH : 628708

Continuing Calibration Blank Sample Summary

DATE	SAMPLE	STORET	PARAMETER	UNITS	FOUND
06/15/92	CCB*QC*3	99046*ICAP	MANGANESE	UG	0.0003
06/15/92	CCB*QC*3	99053*ICAP	SODIUM,TOTAL NA	UG	0.012
06/15/92	CCB*QC*3	99777*ICAP	NICKEL	UG	ND
06/15/92	CCB*QC*3	99775*ICAP	LEAD	UG	0.006
06/15/92	CCB*QC*3	96599*ICAP	ANTIMONY	UG	ND
06/15/92	CCB*QC*3	99055*ICAP	THALLIUM	UG	0.021
06/15/92	CCB*QC*3	99780*ICAP	ZINC	UG	0.0005
06/15/92	CCB*QC*6	99782*ICAP	VANADIUM,TOTAL	UG	ND
06/15/92	CCB*QC*6	99052*ICAP	SILVER	UG	0.0007
06/15/92	CCB*QC*6	99035*ICAP	ALUMINIUM	UG	0.003
06/15/92	CCB*QC*6	99038*ICAP	BARIUM	UG	0.0001
06/15/92	CCB*QC*6	99039*ICAP	BERYLLIUM	UG	0.002
06/15/92	CCB*QC*6	99041*ICAP	CALCIUM,TOTAL CA	UG	0.0008
06/15/92	CCB*QC*6	99776*ICAP	CADMIUM	UG	ND
06/15/92	CCB*QC*6	99042*ICAP	COBALT,TOTAL UG	UG	ND
06/15/92	CCB*QC*6	99778*ICAP	CHROMIUM	UG	ND
06/15/92	CCB*QC*6	99779*ICAP	COPPER	UG	0.0003
06/15/92	CCB*QC*6	96597*ICAP	IRON	UG	0.005
06/15/92	CCB*QC*6	99044*ICAP	POTASSIUM,TOTAL K	UG	0.091
06/15/92	CCB*QC*6	99045*ICAP	MAGNESIUM,TOTAL	UG	0.013
06/15/92	CCB*QC*6	99046*ICAP	MANGANESE	UG	0.0001
06/15/92	CCB*QC*6	99053*ICAP	SODIUM,TOTAL NA	UG	0.002
06/15/92	CCB*QC*6	99777*ICAP	NICKEL	UG	ND
06/15/92	CCB*QC*6	99775*ICAP	LEAD	UG	ND
06/15/92	CCB*QC*6	96599*ICAP	ANTIMONY	UG	ND
06/15/92	CCB*QC*6	99055*ICAP	THALLIUM	UG	0.018
06/15/92	CCB*QC*6	99780*ICAP	ZINC	UG	ND

Initial Calibration Verification Sample Summary

DATE	SAMPLE	STORET	PARAMETER	UNITS	TARGET	FOUND	%RECV	RECV CRIT
06/15/92	ICV*ICAP19*1	99782*ICAP	VANADIUM,TOTAL	UG	1.00	1.03	103	90-110
06/15/92	ICV*ICAP19*1	99052*ICAP	SILVER	UG		ND		90-110
06/15/92	ICV*ICAP19*1	99035*ICAP	ALUMINIUM	UG		ND		90-110
06/15/92	ICV*ICAP19*1	99038*ICAP	BARIUM	UG		ND		90-110
06/15/92	ICV*ICAP19*1	99039*ICAP	BERYLLIUM	UG	1.00	1.02	102	90-110
06/15/92	ICV*ICAP19*1	99041*ICAP	CALCIUM,TOTAL CA	UG	1.00	1.07	107	90-110
06/15/92	ICV*ICAP19*1	99776*ICAP	CADMIUM	UG	1.00	1.01	101	90-110
06/15/92	ICV*ICAP19*1	99042*ICAP	COBALT,TOTAL UG	UG	1.00	1.04	104	90-110
06/15/92	ICV*ICAP19*1	99778*ICAP	CHROMIUM	UG	1.00	1.03	103	90-110
06/15/92	ICV*ICAP19*1	99779*ICAP	COPPER	UG	1.00	1.03	103	90-110
06/15/92	ICV*ICAP19*1	96597*ICAP	IRON	UG	1.00	1.06	106	90-110
06/15/92	ICV*ICAP19*1	99044*ICAP	POTASSIUM,TOTAL K	UG		ND		90-110
06/15/92	ICV*ICAP19*1	99045*ICAP	MAGNESIUM,TOTAL	UG	1.00	1.05	105	90-110
06/15/92	ICV*ICAP19*1	99046*ICAP	MANGANESE	UG	1.00	1.03	103	90-110
06/15/92	ICV*ICAP19*1	99053*ICAP	SODIUM,TOTAL NA	UG		ND		90-110
06/15/92	ICV*ICAP19*1	99777*ICAP	NICKEL	UG	1.00	1.05	105	90-110
06/15/92	ICV*ICAP19*1	99775*ICAP	LEAD	UG	1.00	1.03	103	90-110
06/15/92	ICV*ICAP19*1	96599*ICAP	ANTIMONY	UG	1.00	0.988	98.8	90-110
06/15/92	ICV*ICAP19*1	99055*ICAP	THALLIUM	UG	1.00	1.02	102	90-110
06/15/92	ICV*ICAP19*1	99780*ICAP	ZINC	UG	1.00	1.03	103	90-110
06/15/92	ICV*ICAP7*1	99782*ICAP	VANADIUM,TOTAL	UG		ND		90-110
06/15/92	ICV*ICAP7*1	99052*ICAP	SILVER	UG	1.00	0.996	99.6	90-110
06/15/92	ICV*ICAP7*1	99035*ICAP	ALUMINIUM	UG	1.00	1.00	100.0	90-110
06/15/92	ICV*ICAP7*1	99038*ICAP	BARIUM	UG	1.00	1.02	102	90-110
06/15/92	ICV*ICAP7*1	99039*ICAP	BERYLLIUM	UG		ND		90-110
06/15/92	ICV*ICAP7*1	99041*ICAP	CALCIUM,TOTAL CA	UG		ND		90-110
06/15/92	ICV*ICAP7*1	99776*ICAP	CADMIUM	UG		ND		90-110
06/15/92	ICV*ICAP7*1	99042*ICAP	COBALT,TOTAL UG	UG		ND		90-110
06/15/92	ICV*ICAP7*1	99778*ICAP	CHROMIUM	UG		ND		90-110
06/15/92	ICV*ICAP7*1	99779*ICAP	COPPER	UG		ND		90-110
06/15/92	ICV*ICAP7*1	96597*ICAP	IRON	UG		ND		90-110
06/15/92	ICV*ICAP7*1	99044*ICAP	POTASSIUM,TOTAL K	UG	10.00	9.87	98.7	90-110
06/15/92	ICV*ICAP7*1	99045*ICAP	MAGNESIUM,TOTAL	UG		ND		90-110
06/15/92	ICV*ICAP7*1	99046*ICAP	MANGANESE	UG		ND		90-110
06/15/92	ICV*ICAP7*1	99053*ICAP	SODIUM,TOTAL NA	UG	1.00	1.05	105	90-110
06/15/92	ICV*ICAP7*1	99777*ICAP	NICKEL	UG		ND		90-110
06/15/92	ICV*ICAP7*1	99775*ICAP	LEAD	UG		ND		90-110
06/15/92	ICV*ICAP7*1	96599*ICAP	ANTIMONY	UG		ND		90-110
06/15/92	ICV*ICAP7*1	99055*ICAP	THALLIUM	UG		ND		90-110
06/15/92	ICV*ICAP7*1	99780*ICAP	ZINC	UG		ND		90-110

Continuing Calibration Verification Sample Summary

DATE	SAMPLE	STORET	PARAMETER	UNITS	TARGET	FOUND	%RECV	RECV CRIT
06/15/92	CCV*QC*1	99782*ICAP	VANADIUM,TOTAL	UG	0.500	0.502	100	80-120
06/15/92	CCV*QC*1	99052*ICAP	SILVER	UG	0.500	0.500	100.0	80-120

ESE BATCH : G28708

Continuing Calibration Verification Sample Summary

DATE	SAMPLE	STORET	PARAMETER	UNITS	TARGET	FOUND	%RECV	RECV CRIT
06/15/92	CCV*QC*1	99035*ICAP	ALUMINIUM	UG	5.00	5.09	102	80-120
06/15/92	CCV*QC*1	99038*ICAP	BARIUM	UG	0.500	0.503	101	80-120
06/15/92	CCV*QC*1	99039*ICAP	BERYLLIUM	UG	0.500	0.512	102	80-120
06/15/92	CCV*QC*1	99041*ICAP	CALCIUM,TOTAL CA	UG	5.00	5.15	103	80-120
15/92	CCV*QC*1	99776*ICAP	CADMIUM	UG	0.500	0.499	99.8	80-120
15/92	CCV*QC*1	99042*ICAP	COBALT,TOTAL UG	UG	0.500	0.501	100	80-120
06/15/92	CCV*QC*1	99778*ICAP	CHROMIUM	UG	0.500	0.500	100.0	80-120
06/15/92	CCV*QC*1	99779*ICAP	COPPER	UG	0.500	0.503	101	80-120
06/15/92	CCV*QC*1	96597*ICAP	IRON	UG	5.00	5.13	103	80-120
06/15/92	CCV*QC*1	99044*ICAP	POTASSIUM,TOTAL K	UG	5.00	4.96	99.2	80-120
06/15/92	CCV*QC*1	99045*ICAP	MAGNESIUM,TOTAL	UG	5.00	5.08	102	80-120
06/15/92	CCV*QC*1	99046*ICAP	MANGANESE	UG	0.500	0.500	100.0	80-120
06/15/92	CCV*QC*1	99053*ICAP	SODIUM,TOTAL NA	UG	5.00	5.06	101	80-120
06/15/92	CCV*QC*1	99777*ICAP	NICKEL	UG	0.500	0.500	100.0	80-120
06/15/92	CCV*QC*1	99775*ICAP	LEAD	UG	0.500	0.511	102	80-120
06/15/92	CCV*QC*1	96599*ICAP	ANTIMONY	UG	0.500	0.484	96.8	80-120
06/15/92	CCV*QC*1	99055*ICAP	THALLIUM	UG	0.700	0.712	102	80-120
06/15/92	CCV*QC*1	99780*ICAP	ZINC	UG	0.500	0.497	99.4	80-120
06/15/92	CCV*QC*2	99782*ICAP	VANADIUM,TOTAL	UG	0.500	0.506	101	80-120
06/15/92	CCV*QC*2	99052*ICAP	SILVER	UG	0.500	0.499	99.8	80-120
06/15/92	CCV*QC*2	99035*ICAP	ALUMINIUM	UG	5.00	5.13	103	80-120
06/15/92	CCV*QC*2	99038*ICAP	BARIUM	UG	0.500	0.515	103	80-120
06/15/92	CCV*QC*2	99039*ICAP	BERYLLIUM	UG	0.500	0.512	102	80-120
06/15/92	CCV*QC*2	99041*ICAP	CALCIUM,TOTAL CA	UG	5.00	5.17	103	80-120
06/15/92	CCV*QC*2	99776*ICAP	CADMIUM	UG	0.500	0.494	98.8	80-120
06/15/92	CCV*QC*2	99042*ICAP	COBALT,TOTAL UG	UG	0.500	0.500	100.0	80-120
06/15/92	CCV*QC*2	99778*ICAP	CHROMIUM	UG	0.500	0.504	101	80-120
06/15/92	CCV*QC*2	99779*ICAP	COPPER	UG	0.500	0.505	101	80-120
06/15/92	CCV*QC*2	96597*ICAP	IRON	UG	5.00	5.14	103	80-120
06/15/92	CCV*QC*2	99044*ICAP	POTASSIUM,TOTAL K	UG	5.00	4.75	95.0	80-120
06/15/92	CCV*QC*2	99045*ICAP	MAGNESIUM,TOTAL	UG	5.00	5.13	103	80-120
06/15/92	CCV*QC*2	99046*ICAP	MANGANESE	UG	0.500	0.502	100	80-120
06/15/92	CCV*QC*2	99053*ICAP	SODIUM,TOTAL NA	UG	5.00	5.14	103	80-120
06/15/92	CCV*QC*2	99777*ICAP	NICKEL	UG	0.500	0.507	101	80-120
06/15/92	CCV*QC*2	99775*ICAP	LEAD	UG	0.500	0.524	105	80-120
06/15/92	CCV*QC*2	96599*ICAP	ANTIMONY	UG	0.500	0.485	97.0	80-120
06/15/92	CCV*QC*2	99055*ICAP	THALLIUM	UG	0.700	0.682	97.4	80-120
06/15/92	CCV*QC*2	99780*ICAP	ZINC	UG	0.500	0.507	101	80-120
06/15/92	CCV*QC*3	99782*ICAP	VANADIUM,TOTAL	UG	0.500	0.496	99.2	80-120
15/92	CCV*QC*3	99052*ICAP	SILVER	UG	0.500	0.501	100	80-120
5/92	CCV*QC*3	99035*ICAP	ALUMINIUM	UG	5.00	5.02	100	80-120
15/92	CCV*QC*3	99038*ICAP	BARIUM	UG	0.500	0.498	99.6	80-120
06/15/92	CCV*QC*3	99039*ICAP	BERYLLIUM	UG	0.500	0.509	102	80-120
06/15/92	CCV*QC*3	99041*ICAP	CALCIUM,TOTAL CA	UG	5.00	5.07	101	80-120
06/15/92	CCV*QC*3	99776*ICAP	CADMIUM	UG	0.500	0.497	99.4	80-120
06/15/92	CCV*QC*3	99042*ICAP	COBALT,TOTAL UG	UG	0.500	0.496	99.2	80-120
06/15/92	CCV*QC*3	99778*ICAP	CHROMIUM	UG	0.500	0.492	98.4	80-120
06/15/92	CCV*QC*3	99779*ICAP	COPPER	UG	0.500	0.497	99.4	80-120
06/15/92	CCV*QC*3	96597*ICAP	IRON	UG	5.00	5.04	101	80-120
06/15/92	CCV*QC*3	99044*ICAP	POTASSIUM,TOTAL K	UG	5.00	4.66	93.2	80-120
06/15/92	CCV*QC*3	99045*ICAP	MAGNESIUM,TOTAL	UG	5.00	5.03	101	80-120
06/15/92	CCV*QC*3	99046*ICAP	MANGANESE	UG	0.500	0.492	98.4	80-120
06/15/92	CCV*QC*3	99053*ICAP	SODIUM,TOTAL NA	UG	5.00	5.03	101	80-120
06/15/92	CCV*QC*3	99777*ICAP	NICKEL	UG	0.500	0.493	98.6	80-120
06/15/92	CCV*QC*3	99775*ICAP	LEAD	UG	0.500	0.508	102	80-120
06/15/92	CCV*QC*3	96599*ICAP	ANTIMONY	UG	0.500	0.479	95.8	80-120
06/15/92	CCV*QC*3	99055*ICAP	THALLIUM	UG	0.700	0.656	93.7	80-120
06/15/92	CCV*QC*3	99780*ICAP	ZINC	UG	0.500	0.492	98.4	80-120
06/15/92	CCV*QC*4	99782*ICAP	VANADIUM,TOTAL	UG	0.500	0.506	101	80-120
06/15/92	CCV*QC*4	99052*ICAP	SILVER	UG	0.500	0.507	101	80-120
06/15/92	CCV*QC*4	99035*ICAP	ALUMINIUM	UG	5.00	5.13	103	80-120
06/15/92	CCV*QC*4	99038*ICAP	BARIUM	UG	0.500	0.501	100	80-120
06/15/92	CCV*QC*4	99039*ICAP	BERYLLIUM	UG	0.500	0.515	103	80-120
06/15/92	CCV*QC*4	99041*ICAP	CALCIUM,TOTAL CA	UG	5.00	5.16	103	80-120
06/15/92	CCV*QC*4	99776*ICAP	CADMIUM	UG	0.500	0.496	99.2	80-120
06/15/92	CCV*QC*4	99042*ICAP	COBALT,TOTAL UG	UG	0.500	0.507	101	80-120
06/15/92	CCV*QC*4	99778*ICAP	CHROMIUM	UG	0.500	0.499	99.8	80-120
06/15/92	CCV*QC*4	99779*ICAP	COPPER	UG	0.500	0.502	100	80-120
06/15/92	CCV*QC*4	96597*ICAP	IRON	UG	5.00	5.11	102	80-120
06/15/92	CCV*QC*4	99044*ICAP	POTASSIUM,TOTAL K	UG	5.00	5.33	107	80-120
06/15/92	CCV*QC*4	99045*ICAP	MAGNESIUM,TOTAL	UG	5.00	5.13	103	80-120
06/15/92	CCV*QC*4	99046*ICAP	MANGANESE	UG	0.500	0.500	100.0	80-120
06/15/92	CCV*QC*4	99053*ICAP	SODIUM,TOTAL NA	UG	5.00	5.12	102	80-120
06/15/92	CCV*QC*4	99777*ICAP	NICKEL	UG	0.500	0.502	100	80-120
15/92	CCV*QC*4	99775*ICAP	LEAD	UG	0.500	0.524	105	80-120
5/92	CCV*QC*4	96599*ICAP	ANTIMONY	UG	0.500	0.491	98.2	80-120
15/92	CCV*QC*4	99055*ICAP	THALLIUM	UG	0.700	0.708	101	80-120

ESE BATCH : G28708

Continuing Calibration Verification Sample Summary

DATE	SAMPLE	STORET	PARAMETER	UNITS	TARGET	FOUND	%RECV	RECV CRIT
06/15/92	CCV*QC*4	99780*ICAP	ZINC	UG	0.500	0.499	99.8	80-120
06/15/92	CCV*QC*7	99782*ICAP	VANADIUM,TOTAL	UG	0.500	0.501	100	80-120
06/15/92	CCV*QC*7	99052*ICAP	SILVER	UG	0.500	0.499	99.8	80-120
06/15/92	CCV*QC*7	99035*ICAP	ALUMINIUM	UG	5.00	5.05	101	80-120
06/15/92	CCV*QC*7	99038*ICAP	BARIUM	UG	0.500	0.501	100	80-120
06/15/92	CCV*QC*7	99039*ICAP	BERYLLIUM	UG	0.500	0.512	102	80-120
06/15/92	CCV*QC*7	99041*ICAP	CALCIUM,TOTAL CA	UG	5.00	5.08	102	80-120
06/15/92	CCV*QC*7	99776*ICAP	CADMIUM	UG	0.500	0.489	97.8	80-120
06/15/92	CCV*QC*7	99042*ICAP	COBALT,TOTAL UG	UG	0.500	0.498	99.6	80-120
06/15/92	CCV*QC*7	99778*ICAP	CHROMIUM	UG	0.500	0.495	99.0	80-120
06/15/92	CCV*QC*7	99779*ICAP	COPPER	UG	0.500	0.499	99.8	80-120
06/15/92	CCV*QC*7	96597*ICAP	IRON	UG	5.00	5.05	101	80-120
06/15/92	CCV*QC*7	99044*ICAP	POTASSIUM,TOTAL K	UG	5.00	4.88	97.6	80-120
06/15/92	CCV*QC*7	99045*ICAP	MAGNESIUM,TOTAL	UG	5.00	5.08	102	80-120
06/15/92	CCV*QC*7	99046*ICAP	MANGANESE	UG	0.500	0.497	99.4	80-120
06/15/92	CCV*QC*7	99053*ICAP	SODIUM,TOTAL NA	UG	5.00	5.07	101	80-120
06/15/92	CCV*QC*7	99777*ICAP	NICKEL	UG	0.500	0.500	100.0	80-120
06/15/92	CCV*QC*7	99775*ICAP	LEAD	UG	0.500	0.493	98.6	80-120
06/15/92	CCV*QC*7	96599*ICAP	ANTIMONY	UG	0.500	0.476	95.2	80-120
06/15/92	CCV*QC*7	99055*ICAP	THALLIUM	UG	0.700	0.707	101	80-120
06/15/92	CCV*QC*7	99780*ICAP	ZINC	UG	0.500	0.491	98.2	80-120

Method Blank Sample Summary

DATE	SAMPLE	STORET	PARAMETER	UNITS	FOUND
06/15/92	MB*QC*2	99782*ICAP	VANADIUM,TOTAL	UG	ND
06/15/92	MB*QC*2	99052*ICAP	SILVER	UG	ND
06/15/92	MB*QC*2	99035*ICAP	ALUMINIUM	UG	ND
06/15/92	MB*QC*2	99038*ICAP	BARIUM	UG	ND
06/15/92	MB*QC*2	99039*ICAP	BERYLLIUM	UG	ND
06/15/92	MB*QC*2	99041*ICAP	CALCIUM,TOTAL CA	UG	ND
06/15/92	MB*QC*2	99776*ICAP	CADMIUM	UG	ND
06/15/92	MB*QC*2	99042*ICAP	COBALT,TOTAL UG	UG	ND
06/15/92	MB*QC*2	99778*ICAP	CHROMIUM	UG	ND
06/15/92	MB*QC*2	99779*ICAP	COPPER	UG	ND
06/15/92	MB*QC*2	96597*ICAP	IRON	UG	ND
06/15/92	MB*QC*2	99044*ICAP	POTASSIUM,TOTAL K	UG	ND
06/15/92	MB*QC*2	99045*ICAP	MAGNESIUM,TOTAL	UG	ND
06/15/92	MB*QC*2	99046*ICAP	MANGANESE	UG	ND
06/15/92	MB*QC*2	99053*ICAP	SODIUM,TOTAL NA	UG	ND
06/15/92	MB*QC*2	99777*ICAP	NICKEL	UG	ND
06/15/92	MB*QC*2	99775*ICAP	LEAD	UG	ND
06/15/92	MB*QC*2	96599*ICAP	ANTIMONY	UG	ND
06/15/92	MB*QC*2	99055*ICAP	THALLIUM	UG	ND
06/15/92	MB*QC*2	99780*ICAP	ZINC	UG	ND

Standard Matrix Spike Recovery Summary

DATE	SAMPLE	STORET	PARAMETER	%RECV	RECV CRIT	UNITS	TARGET	FOUND
06/15/92	SP*QC*2	99782*ICAP	VANADIUM,TOTAL	97.4	87-105	UG	0.500	0.487
06/15/92	SP*QC*2	99052*ICAP	SILVER	90.0	73-107	UG	0.050	0.045
06/15/92	SP*QC*2	99035*ICAP	ALUMINIUM	99.5	81-113	UG	2.00	1.99
06/15/92	SP*QC*2	99038*ICAP	BARIUM	99.0	86-106	UG	2.00	1.98
06/15/92	SP*QC*2	99039*ICAP	BERYLLIUM	96.0	78-108	UG	0.050	0.048
06/15/92	SP*QC*2	99041*ICAP	CALCIUM,TOTAL CA	98.0	80-120	UG	10.00	9.80
06/15/92	SP*QC*2	99776*ICAP	CADMIUM	88.0	80-108	UG	0.050	0.044
06/15/92	SP*QC*2	99042*ICAP	COBALT,TOTAL UG	95.8	84-108	UG	0.500	0.479
06/15/92	SP*QC*2	99778*ICAP	CHROMIUM	96.5	79-109	UG	0.200	0.193
06/15/92	SP*QC*2	99779*ICAP	COPPER	97.6	84-108	UG	0.250	0.244
06/15/92	SP*QC*2	96597*ICAP	IRON	101.0	77-113	UG	1.00	1.01
06/15/92	SP*QC*2	99044*ICAP	POTASSIUM,TOTAL K	92.3	80-120	UG	10.00	9.23
06/15/92	SP*QC*2	99045*ICAP	MAGNESIUM,TOTAL	98.8	80-120	UG	10.00	9.88
06/15/92	SP*QC*2	99046*ICAP	MANGANESE	96.2	83-107	UG	0.500	0.481
06/15/92	SP*QC*2	99053*ICAP	SODIUM,TOTAL NA	98.8	80-120	UG	10.00	9.88
06/15/92	SP*QC*2	99777*ICAP	NICKEL	96.2	78-106	UG	0.500	0.481
06/15/92	SP*QC*2	99775*ICAP	LEAD	95.8	79-109	UG	0.500	0.479
06/15/92	SP*QC*2	96599*ICAP	ANTIMONY	91.8	79-109	UG	0.500	0.459
06/15/92	SP*QC*2	99055*ICAP	THALLIUM	92.0	75-111	UG	2.00	1.84
06/15/92	SP*QC*2	99780*ICAP	ZINC	95.8	76-112	UG	0.500	0.479

Spike into Matrix Recovery Summary

DATE	SAMPLE	STORET	PARAMETER	%RECV	RECV CRIT	UNITS	TARGET	FOUND
06/15/92	SPX*ALS2B*21	99782*ICAP	VANADIUM,TOTAL	99.4	85-115	UG	0.500	0.497
06/15/92	SPX*ALS2B*21	99052*ICAP	SILVER	100.2	85-115	UG	0.500	0.501
06/15/92	SPX*ALS2B*21	99035*ICAP	ALUMINIUM	108.0	85-115	UG	5.00	5.40
06/15/92	SPX*ALS2B*21	99038*ICAP	BARIUM	-222	85-115	UG	0.500	-1.11

ESE BATCH : 628708

Spike into Matrix Recovery Summary

DATE	SAMPLE	STORET	PARAMETER	%RECV	RECV CRIT	UNITS	TARGET	FOUND
06/15/92	SPX*ALS2B*21	99039*ICAP	BERYLLIUM	103.8	85-115	UG	0.500	0.519
06/15/92	SPX*ALS2B*21	99041*ICAP	CALCIUM TOTAL CA	179.0	85-115	UG	5.00	8.95
06/15/92	SPX*ALS2B*21	99776*ICAP	CADMIUM	101.0	85-115	UG	0.500	0.505
06/15/92	SPX*ALS2B*21	99042*ICAP	COBALT,TOTAL UG	100.4	85-115	UG	0.500	0.502
06/15/92	SPX*ALS2B*21	99778*ICAP	CHROMIUM	151.0	85-115	UG	0.500	0.755
06/15/92	SPX*ALS2B*21	99779*ICAP	COPPER	100.0	85-115	UG	0.500	0.500
06/15/92	SPX*ALS2B*21	96597*ICAP	IRON	104.2	85-115	UG	5.00	5.21
06/15/92	SPX*ALS2B*21	99044*ICAP	POTASSIUM,TOTAL K	107.2	85-115	UG	5.00	5.36
06/15/92	SPX*ALS2B*21	99045*ICAP	MAGNESIUM,TOTAL	103.8	85-115	UG	5.00	5.19
06/15/92	SPX*ALS2B*21	99046*ICAP	MANGANESE	98.4	85-115	UG	0.500	0.492
06/15/92	SPX*ALS2B*21	99053*ICAP	SODIUM,TOTAL NA	108.4	85-115	UG	5.00	5.42
06/15/92	SPX*ALS2B*21	99777*ICAP	NICKEL	123.2	85-115	UG	0.500	0.616
06/15/92	SPX*ALS2B*21	99775*ICAP	LEAD	136.8	85-115	UG	0.500	0.684
06/15/92	SPX*ALS2B*21	96599*ICAP	ANTIMONY	97.2	85-115	UG	0.500	0.486
06/15/92	SPX*ALS2B*21	99055*ICAP	THALLIUM	98.9	85-115	UG	0.700	0.692
06/15/92	SPX*ALS2B*21	99780*ICAP	ZINC	504.0	85-115	UG	0.500	2.52

ESE BATCH : G28708

Environmental Science and Engineering Analytical Services
Computer QC Checks

Batch No.: G28708 Analysis Date: 06/15/92 Analyst: JEFF MILLER

	Yes	"Exceptions" No	Comment / Corrective Action
Analysis holding time within criteria?	X		
Extract holding time within criteria?	X		
ICV present?	X		
ICV within acceptance criteria?	X		
CCV present?	X		
CCV within acceptance criteria?	X		
Method blank present?	X		
Method blank within acceptance criteria?	X		
Standard matrix spike present?	X		
Standard matrix spike within acceptance criteria?	X		

Note: Any "NO" answer requires a comment.

ESE BATCH : G28709
CLASSIFICATION : TAL METALS - CLP SOW 3/90

STATUS : FINAL

METHOD BLANK CORRECTION METHOD : NONE

FIELD GRP	PROJECT NUMBER	PROJECT NAME	LAB COORDINATOR
2B	3914042 0201	JMM/ALAMEDA CTO-121	JACKIE HARGROVE-ELLI

SAMPLE CODE	CLIENT ID	DATE ANALYZED	TIME ANALYZED
ALS2B*14	W05-01	06/15/92	01:27PM
ALS2B*15	W05-02	06/15/92	01:30PM
ALS2B*16	W05-03	06/15/92	01:32PM
ALS2B*17	W05-04	06/15/92	01:39PM
ALS2B*44	B-05PS-01	06/15/92	01:45PM
ALS2B*45	B-05PS-01	06/15/92	01:53PM
ALS2B*46	B-05PS-01	06/15/92	01:55PM
ALS2B*48	B-05PS-02	06/15/92	01:58PM
ALS2B*49	B-05PS-02	06/15/92	02:01PM
ALS2B*50	B-05PS-03	06/15/92	02:03PM
ALS2B*52	B-05PS-04	06/15/92	02:05PM
ALS2B*53	B-05PS-04	06/15/92	02:08PM
ALS2B*54	B-05PS-05	06/15/92	02:10PM
ALS2B*55	B-05PS-05	06/15/92	02:13PM
ALS2B*68	05PS-DUP1	06/15/92	02:16PM
ALS2B*70	B-05SP-01	06/15/92	02:47PM
ALS2B*71	B-05WT-01	06/15/92	02:50PM
ALS2B*72	B-05WT-02	06/15/92	02:52PM
ALS2B*82	B-05BS-02	06/15/92	02:55PM

ESE BATCH : G28709

Initial Calibration Blank Summary

DATE	SAMPLE	STORET	PARAMETER	UNITS	FOUND
06/15/92	ICB*QC*1	1078*CLP90	SILVER	MG/KG-DRY	0.0003
06/15/92	ICB*QC*1	1108*CLP90	ALUMINUM	MG/KG-DRY	0.003
06/15/92	ICB*QC*1	1008*CLP90	BARIUM	MG/KG-DRY	0.0002
06/15/92	ICB*QC*1	1013*CLP90	BERYLLIUM	MG/KG-DRY	0.001
06/15/92	ICB*QC*1	917*CLP90	CALCIUM	MG/KG-DRY	0.0003
06/15/92	ICB*QC*1	1028*CLP90	CADMIUM	MG/KG-DRY	ND
06/15/92	ICB*QC*1	1038*CLP90	COBALT	MG/KG-DRY	ND
06/15/92	ICB*QC*1	1029*CLP90	CHROMIUM	MG/KG-DRY	ND
06/15/92	ICB*QC*1	1043*CLP90	COPPER	MG/KG-DRY	0.001
06/15/92	ICB*QC*1	1170*CLP90	IRON	MG/KG-DRY	0.002
06/15/92	ICB*QC*1	938*CLP90	POTASSIUM	MG/KG-DRY	0.077
06/15/92	ICB*QC*1	924*CLP90	MAGNESIUM	MG/KG-DRY	0.009
06/15/92	ICB*QC*1	1053*CLP90	MANGANESE	MG/KG-DRY	ND
06/15/92	ICB*QC*1	934*CLP90	SODIUM	MG/KG-DRY	0.010
06/15/92	ICB*QC*1	1068*CLP90	NICKEL	MG/KG-DRY	0.0006
06/15/92	ICB*QC*1	1052*CLP90I	LEAD	MG/KG -DRY	0.010
06/15/92	ICB*QC*1	1098*CLP90	ANTIMONY	MG/KG-DRY	ND
06/15/92	ICB*QC*1	1088*CLP90	VANADIUM	MG/KG-DRY	ND
06/15/92	ICB*QC*1	1093*CLP90	ZINC	MG/KG-DRY	ND

Continuing Calibration Blank Sample Summary

DATE	SAMPLE	STORET	PARAMETER	UNITS	FOUND
06/15/92	CCB*QC*1	1078*CLP90	SILVER	MG/KG-DRY	ND
06/15/92	CCB*QC*1	1108*CLP90	ALUMINUM	MG/KG-DRY	0.006
06/15/92	CCB*QC*1	1008*CLP90	BARIUM	MG/KG-DRY	0.0008
06/15/92	CCB*QC*1	1013*CLP90	BERYLLIUM	MG/KG-DRY	0.002
06/15/92	CCB*QC*1	917*CLP90	CALCIUM	MG/KG-DRY	0.007
06/15/92	CCB*QC*1	1028*CLP90	CADMIUM	MG/KG-DRY	0.0002
06/15/92	CCB*QC*1	1038*CLP90	COBALT	MG/KG-DRY	0.002
06/15/92	CCB*QC*1	1029*CLP90	CHROMIUM	MG/KG-DRY	0.0007
06/15/92	CCB*QC*1	1043*CLP90	COPPER	MG/KG-DRY	0.001
06/15/92	CCB*QC*1	1170*CLP90	IRON	MG/KG-DRY	0.005
06/15/92	CCB*QC*1	938*CLP90	POTASSIUM	MG/KG-DRY	ND
06/15/92	CCB*QC*1	924*CLP90	MAGNESIUM	MG/KG-DRY	0.020
06/15/92	CCB*QC*1	1053*CLP90	MANGANESE	MG/KG-DRY	ND
06/15/92	CCB*QC*1	934*CLP90	SODIUM	MG/KG-DRY	0.003
06/15/92	CCB*QC*1	1068*CLP90	NICKEL	MG/KG-DRY	ND
06/15/92	CCB*QC*1	1052*CLP90I	LEAD	MG/KG -DRY	0.024
06/15/92	CCB*QC*1	1098*CLP90	ANTIMONY	MG/KG-DRY	ND
06/15/92	CCB*QC*1	1088*CLP90	VANADIUM	MG/KG-DRY	ND
06/15/92	CCB*QC*1	1093*CLP90	ZINC	MG/KG-DRY	0.002
06/15/92	CCB*QC*2	1078*CLP90	SILVER	MG/KG-DRY	ND
06/15/92	CCB*QC*2	1108*CLP90	ALUMINUM	MG/KG-DRY	ND
06/15/92	CCB*QC*2	1008*CLP90	BARIUM	MG/KG-DRY	ND
06/15/92	CCB*QC*2	1013*CLP90	BERYLLIUM	MG/KG-DRY	0.001
06/15/92	CCB*QC*2	917*CLP90	CALCIUM	MG/KG-DRY	0.0008
06/15/92	CCB*QC*2	1028*CLP90	CADMIUM	MG/KG-DRY	ND
06/15/92	CCB*QC*2	1038*CLP90	COBALT	MG/KG-DRY	ND
06/15/92	CCB*QC*2	1029*CLP90	CHROMIUM	MG/KG-DRY	ND
06/15/92	CCB*QC*2	1043*CLP90	COPPER	MG/KG-DRY	0.0004
06/15/92	CCB*QC*2	1170*CLP90	IRON	MG/KG-DRY	0.002
06/15/92	CCB*QC*2	938*CLP90	POTASSIUM	MG/KG-DRY	ND
06/15/92	CCB*QC*2	924*CLP90	MAGNESIUM	MG/KG-DRY	ND
06/15/92	CCB*QC*2	1053*CLP90	MANGANESE	MG/KG-DRY	ND
06/15/92	CCB*QC*2	934*CLP90	SODIUM	MG/KG-DRY	ND
06/15/92	CCB*QC*2	1068*CLP90	NICKEL	MG/KG-DRY	ND
06/15/92	CCB*QC*2	1052*CLP90I	LEAD	MG/KG -DRY	0.010
06/15/92	CCB*QC*2	1098*CLP90	ANTIMONY	MG/KG-DRY	ND
06/15/92	CCB*QC*2	1088*CLP90	VANADIUM	MG/KG-DRY	ND
06/15/92	CCB*QC*2	1093*CLP90	ZINC	MG/KG-DRY	ND
06/15/92	CCB*QC*3	1078*CLP90	SILVER	MG/KG-DRY	0.002
06/15/92	CCB*QC*3	1108*CLP90	ALUMINUM	MG/KG-DRY	0.006
06/15/92	CCB*QC*3	1008*CLP90	BARIUM	MG/KG-DRY	0.0003
06/15/92	CCB*QC*3	1013*CLP90	BERYLLIUM	MG/KG-DRY	0.002
06/15/92	CCB*QC*3	917*CLP90	CALCIUM	MG/KG-DRY	0.002
06/15/92	CCB*QC*3	1028*CLP90	CADMIUM	MG/KG-DRY	ND
06/15/92	CCB*QC*3	1038*CLP90	COBALT	MG/KG-DRY	0.0009
06/15/92	CCB*QC*3	1029*CLP90	CHROMIUM	MG/KG-DRY	ND
06/15/92	CCB*QC*3	1043*CLP90	COPPER	MG/KG-DRY	ND
06/15/92	CCB*QC*3	1170*CLP90	IRON	MG/KG-DRY	0.003
06/15/92	CCB*QC*3	938*CLP90	POTASSIUM	MG/KG-DRY	0.408
06/15/92	CCB*QC*3	924*CLP90	MAGNESIUM	MG/KG-DRY	0.030
06/15/92	CCB*QC*3	1053*CLP90	MANGANESE	MG/KG-DRY	0.0003
06/15/92	CCB*QC*3	934*CLP90	SODIUM	MG/KG-DRY	0.012
06/15/92	CCB*QC*3	1068*CLP90	NICKEL	MG/KG-DRY	ND
06/15/92	CCB*QC*3	1052*CLP90I	LEAD	MG/KG -DRY	0.006

Continuing Calibration Blank Sample Summary

DATE	SAMPLE	STORET	PARAMETER	UNITS	FOUND
06/15/92	CCB*QC*3	1098*CLP90	ANTIMONY	MG/KG-DRY	ND
06/15/92	CCB*QC*3	1088*CLP90	VANADIUM	MG/KG-DRY	0.0008
06/15/92	CCB*QC*3	1093*CLP90	ZINC	MG/KG-DRY	0.0005
06/15/92	CCB*QC*4	1078*CLP90	SILVER	MG/KG-DRY	0.001
'15/92	CCB*QC*4	1108*CLP90	ALUMINUM	MG/KG-DRY	0.007
15/92	CCB*QC*4	1008*CLP90	BARIUM	MG/KG-DRY	0.0002
/15/92	CCB*QC*4	1013*CLP90	BERYLLIUM	MG/KG-DRY	0.002
06/15/92	CCB*QC*4	917*CLP90	CALCIUM	MG/KG-DRY	0.0003
06/15/92	CCB*QC*4	1028*CLP90	CADMIUM	MG/KG-DRY	ND
06/15/92	CCB*QC*4	1038*CLP90	COBALT	MG/KG-DRY	0.003
06/15/92	CCB*QC*4	1029*CLP90	CHROMIUM	MG/KG-DRY	0.0001
06/15/92	CCB*QC*4	1043*CLP90	COPPER	MG/KG-DRY	0.0002
06/15/92	CCB*QC*4	1170*CLP90	IRON	MG/KG-DRY	0.003
06/15/92	CCB*QC*4	938*CLP90	POTASSIUM	MG/KG-DRY	0.342
06/15/92	CCB*QC*4	924*CLP90	MAGNESIUM	MG/KG-DRY	0.018
06/15/92	CCB*QC*4	1053*CLP90	MANGANESE	MG/KG-DRY	0.0002
06/15/92	CCB*QC*4	934*CLP90	SODIUM	MG/KG-DRY	0.013
06/15/92	CCB*QC*4	1068*CLP90	NICKEL	MG/KG-DRY	0.001
06/15/92	CCB*QC*4	1052*CLP90[	LEAD	MG/KG -DRY	0.001
06/15/92	CCB*QC*4	1098*CLP90	ANTIMONY	MG/KG-DRY	ND
06/15/92	CCB*QC*4	1088*CLP90	VANADIUM	MG/KG-DRY	ND
06/15/92	CCB*QC*4	1093*CLP90	ZINC	MG/KG-DRY	ND
06/15/92	CCB*QC*5	1078*CLP90	SILVER	MG/KG-DRY	0.002
06/15/92	CCB*QC*5	1108*CLP90	ALUMINUM	MG/KG-DRY	0.009
06/15/92	CCB*QC*5	1008*CLP90	BARIUM	MG/KG-DRY	0.0003
06/15/92	CCB*QC*5	1013*CLP90	BERYLLIUM	MG/KG-DRY	0.001
06/15/92	CCB*QC*5	917*CLP90	CALCIUM	MG/KG-DRY	0.001
06/15/92	CCB*QC*5	1028*CLP90	CADMIUM	MG/KG-DRY	0.0005
06/15/92	CCB*QC*5	1038*CLP90	COBALT	MG/KG-DRY	ND
06/15/92	CCB*QC*5	1029*CLP90	CHROMIUM	MG/KG-DRY	ND
06/15/92	CCB*QC*5	1043*CLP90	COPPER	MG/KG-DRY	0.0004
06/15/92	CCB*QC*5	1170*CLP90	IRON	MG/KG-DRY	0.005
06/15/92	CCB*QC*5	938*CLP90	POTASSIUM	MG/KG-DRY	0.331
06/15/92	CCB*QC*5	924*CLP90	MAGNESIUM	MG/KG-DRY	0.020
06/15/92	CCB*QC*5	1053*CLP90	MANGANESE	MG/KG-DRY	0.0003
06/15/92	CCB*QC*5	934*CLP90	SODIUM	MG/KG-DRY	0.021
06/15/92	CCB*QC*5	1068*CLP90	NICKEL	MG/KG-DRY	ND
06/15/92	CCB*QC*5	1052*CLP90[	LEAD	MG/KG -DRY	0.009
06/15/92	CCB*QC*5	1098*CLP90	ANTIMONY	MG/KG-DRY	ND
'/15/92	CCB*QC*5	1088*CLP90	VANADIUM	MG/KG-DRY	ND
15/92	CCB*QC*5	1093*CLP90	ZINC	MG/KG-DRY	ND
15/92	CCB*QC*6	1078*CLP90	SILVER	MG/KG-DRY	0.0007
06/15/92	CCB*QC*6	1108*CLP90	ALUMINUM	MG/KG-DRY	0.003
06/15/92	CCB*QC*6	1008*CLP90	BARIUM	MG/KG-DRY	0.0001
06/15/92	CCB*QC*6	1013*CLP90	BERYLLIUM	MG/KG-DRY	0.002
06/15/92	CCB*QC*6	917*CLP90	CALCIUM	MG/KG-DRY	0.0008
06/15/92	CCB*QC*6	1028*CLP90	CADMIUM	MG/KG-DRY	ND
06/15/92	CCB*QC*6	1038*CLP90	COBALT	MG/KG-DRY	ND
06/15/92	CCB*QC*6	1029*CLP90	CHROMIUM	MG/KG-DRY	ND
06/15/92	CCB*QC*6	1043*CLP90	COPPER	MG/KG-DRY	0.0003
06/15/92	CCB*QC*6	1170*CLP90	IRON	MG/KG-DRY	0.005
06/15/92	CCB*QC*6	938*CLP90	POTASSIUM	MG/KG-DRY	0.091
06/15/92	CCB*QC*6	924*CLP90	MAGNESIUM	MG/KG-DRY	0.012
06/15/92	CCB*QC*6	1053*CLP90	MANGANESE	MG/KG-DRY	0.0001
06/15/92	CCB*QC*6	934*CLP90	SODIUM	MG/KG-DRY	0.002
06/15/92	CCB*QC*6	1068*CLP90	NICKEL	MG/KG-DRY	ND
06/15/92	CCB*QC*6	1052*CLP90[	LEAD	MG/KG -DRY	ND
06/15/92	CCB*QC*6	1098*CLP90	ANTIMONY	MG/KG-DRY	ND
06/15/92	CCB*QC*6	1088*CLP90	VANADIUM	MG/KG-DRY	ND
06/15/92	CCB*QC*6	1093*CLP90	ZINC	MG/KG-DRY	ND

Initial Calibration Verification Sample Summary

DATE	SAMPLE	STORET	PARAMETER	UNITS	TARGET	FOUND	%RECV	RECV CRIT
06/15/92	ICV*ICAP19*1	1078*CLP90	SILVER	MG/KG-DRY		ND		90-110
06/15/92	ICV*ICAP19*1	1108*CLP90	ALUMINUM	MG/KG-DRY		ND		90-110
06/15/92	ICV*ICAP19*1	1008*CLP90	BARIUM	MG/KG-DRY		ND		90-110
06/15/92	ICV*ICAP19*1	1013*CLP90	BERYLLIUM	MG/KG-DRY	1.00	1.02	102	90-110
06/15/92	ICV*ICAP19*1	917*CLP90	CALCIUM	MG/KG-DRY	1.00	1.07	107	90-110
06/15/92	ICV*ICAP19*1	1028*CLP90	CADMIUM	MG/KG-DRY	1.00	1.01	101	90-110
06/15/92	ICV*ICAP19*1	1038*CLP90	COBALT	MG/KG-DRY	1.00	1.04	104	90-110
06/15/92	ICV*ICAP19*1	1029*CLP90	CHROMIUM	MG/KG-DRY	1.00	1.03	103	90-110
06/15/92	ICV*ICAP19*1	1043*CLP90	COPPER	MG/KG-DRY	1.00	1.03	103	90-110
06/15/92	ICV*ICAP19*1	1170*CLP90	IRON	MG/KG-DRY	1.00	1.06	106	90-110
'</15/92	ICV*ICAP19*1	938*CLP90	POTASSIUM	MG/KG-DRY		ND		90-110
15/92	ICV*ICAP19*1	924*CLP90	MAGNESIUM	MG/KG-DRY	1.00	1.05	105	90-110
15/92	ICV*ICAP19*1	1053*CLP90	MANGANESE	MG/KG-DRY	1.00	1.03	103	90-110

ESE BATCH : 628709

Initial Calibration Verification Sample Summary

DATE	SAMPLE	STORET	PARAMETER	UNITS	TARGET	FOUND	%RECV	RECV CRIT
06/15/92	ICV*ICAP19*1	934*CLP90	SODIUM	MG/KG-DRY		ND		90-110
06/15/92	ICV*ICAP19*1	1068*CLP90	NICKEL	MG/KG-DRY	1.00	1.05	105	90-110
06/15/92	ICV*ICAP19*1	1052*CLP90I	LEAD	MG/KG -DRY	1.00	1.03	103	90-110
06/15/92	ICV*ICAP19*1	1098*CLP90	ANTIMONY	MG/KG-DRY	1.0	1.0	100	90-110
06/15/92	ICV*ICAP19*1	1088*CLP90	VANADIUM	MG/KG-DRY	1.00	1.03	103	90-110
06/15/92	ICV*ICAP19*1	1093*CLP90	ZINC	MG/KG-DRY	1.00	1.03	103	90-110
06/15/92	ICV*ICAP7*1	1078*CLP90	SILVER	MG/KG-DRY	1.00	0.996	99.6	90-110
06/15/92	ICV*ICAP7*1	1108*CLP90	ALUMINUM	MG/KG-DRY	1.00	1.00	100.0	90-110
06/15/92	ICV*ICAP7*1	1008*CLP90	BARIUM	MG/KG-DRY	1.00	1.02	102	90-110
06/15/92	ICV*ICAP7*1	1013*CLP90	BERYLLIUM	MG/KG-DRY		ND		90-110
06/15/92	ICV*ICAP7*1	917*CLP90	CALCIUM	MG/KG-DRY		ND		90-110
06/15/92	ICV*ICAP7*1	1028*CLP90	CADMIUM	MG/KG-DRY		ND		90-110
06/15/92	ICV*ICAP7*1	1038*CLP90	COBALT	MG/KG-DRY		ND		90-110
06/15/92	ICV*ICAP7*1	1029*CLP90	CHROMIUM	MG/KG-DRY		ND		90-110
06/15/92	ICV*ICAP7*1	1043*CLP90	COPPER	MG/KG-DRY		ND		90-110
06/15/92	ICV*ICAP7*1	1170*CLP90	IRON	MG/KG-DRY		ND		90-110
06/15/92	ICV*ICAP7*1	938*CLP90	POTASSIUM	MG/KG-DRY	10.00	9.87	98.7	90-110
06/15/92	ICV*ICAP7*1	924*CLP90	MAGNESIUM	MG/KG-DRY		ND		90-110
06/15/92	ICV*ICAP7*1	1053*CLP90	MANGANESE	MG/KG-DRY		ND		90-110
06/15/92	ICV*ICAP7*1	934*CLP90	SODIUM	MG/KG-DRY	1.00	1.05	105	90-110
06/15/92	ICV*ICAP7*1	1068*CLP90	NICKEL	MG/KG-DRY		ND		90-110
06/15/92	ICV*ICAP7*1	1052*CLP90I	LEAD	MG/KG -DRY		ND		90-110
06/15/92	ICV*ICAP7*1	1098*CLP90	ANTIMONY	MG/KG-DRY		ND		90-110
06/15/92	ICV*ICAP7*1	1088*CLP90	VANADIUM	MG/KG-DRY		ND		90-110
06/15/92	ICV*ICAP7*1	1093*CLP90	ZINC	MG/KG-DRY		ND		90-110

Continuing Calibration Verification Sample Summary

DATE	SAMPLE	STORET	PARAMETER	UNITS	TARGET	FOUND	%RECV	RECV CRIT
06/15/92	CCV*QC*1	1078*CLP90	SILVER	MG/KG-DRY	0.500	0.500	100.0	90-110
06/15/92	CCV*QC*1	1108*CLP90	ALUMINUM	MG/KG-DRY	5.00	5.09	102	90-110
06/15/92	CCV*QC*1	1008*CLP90	BARIUM	MG/KG-DRY	0.500	0.503	101	90-110
06/15/92	CCV*QC*1	1013*CLP90	BERYLLIUM	MG/KG-DRY	0.500	0.512	102	90-110
06/15/92	CCV*QC*1	917*CLP90	CALCIUM	MG/KG-DRY	5.00	5.15	103	90-110
06/15/92	CCV*QC*1	1028*CLP90	CADMIUM	MG/KG-DRY	0.500	0.499	99.8	90-110
06/15/92	CCV*QC*1	1038*CLP90	COBALT	MG/KG-DRY	0.500	0.501	100	90-110
06/15/92	CCV*QC*1	1029*CLP90	CHROMIUM	MG/KG-DRY	0.500	0.500	100.0	90-110
06/15/92	CCV*QC*1	1043*CLP90	COPPER	MG/KG-DRY	0.500	0.503	101	90-110
06/15/92	CCV*QC*1	1170*CLP90	IRON	MG/KG-DRY	5.00	5.13	103	90-110
06/15/92	CCV*QC*1	938*CLP90	POTASSIUM	MG/KG-DRY	5.00	4.96	99.2	90-110
06/15/92	CCV*QC*1	924*CLP90	MAGNESIUM	MG/KG-DRY	5.00	5.08	102	90-110
06/15/92	CCV*QC*1	1053*CLP90	MANGANESE	MG/KG-DRY	0.500	0.500	100.0	90-110
06/15/92	CCV*QC*1	934*CLP90	SODIUM	MG/KG-DRY	5.00	5.06	101	90-110
06/15/92	CCV*QC*1	1068*CLP90	NICKEL	MG/KG-DRY	0.500	0.500	100.0	90-110
06/15/92	CCV*QC*1	1052*CLP90I	LEAD	MG/KG -DRY	0.500	0.511	102	90-110
06/15/92	CCV*QC*1	1098*CLP90	ANTIMONY	MG/KG-DRY	0.5	0.5	100	90-110
06/15/92	CCV*QC*1	1088*CLP90	VANADIUM	MG/KG-DRY	0.500	0.502	100	90-110
06/15/92	CCV*QC*1	1093*CLP90	ZINC	MG/KG-DRY	0.500	0.497	99.4	90-110
06/15/92	CCV*QC*2	1078*CLP90	SILVER	MG/KG-DRY	0.500	0.499	99.8	90-110
06/15/92	CCV*QC*2	1108*CLP90	ALUMINUM	MG/KG-DRY	5.00	5.13	103	90-110
06/15/92	CCV*QC*2	1008*CLP90	BARIUM	MG/KG-DRY	0.500	0.515	103	90-110
06/15/92	CCV*QC*2	1013*CLP90	BERYLLIUM	MG/KG-DRY	0.500	0.512	102	90-110
06/15/92	CCV*QC*2	917*CLP90	CALCIUM	MG/KG-DRY	5.00	5.17	103	90-110
06/15/92	CCV*QC*2	1028*CLP90	CADMIUM	MG/KG-DRY	0.500	0.494	98.8	90-110
06/15/92	CCV*QC*2	1038*CLP90	COBALT	MG/KG-DRY	0.500	0.500	100.0	90-110
06/15/92	CCV*QC*2	1029*CLP90	CHROMIUM	MG/KG-DRY	0.500	0.504	101	90-110
06/15/92	CCV*QC*2	1043*CLP90	COPPER	MG/KG-DRY	0.500	0.505	101	90-110
06/15/92	CCV*QC*2	1170*CLP90	IRON	MG/KG-DRY	5.00	5.14	103	90-110
06/15/92	CCV*QC*2	938*CLP90	POTASSIUM	MG/KG-DRY	5.00	4.75	95.0	90-110
06/15/92	CCV*QC*2	924*CLP90	MAGNESIUM	MG/KG-DRY	5.00	5.13	103	90-110
06/15/92	CCV*QC*2	1053*CLP90	MANGANESE	MG/KG-DRY	0.500	0.502	100	90-110
06/15/92	CCV*QC*2	934*CLP90	SODIUM	MG/KG-DRY	5.00	5.14	103	90-110
06/15/92	CCV*QC*2	1068*CLP90	NICKEL	MG/KG-DRY	0.500	0.507	101	90-110
06/15/92	CCV*QC*2	1052*CLP90I	LEAD	MG/KG -DRY	0.500	0.524	105	90-110
06/15/92	CCV*QC*2	1098*CLP90	ANTIMONY	MG/KG-DRY	0.5	0.5	100	90-110
06/15/92	CCV*QC*2	1088*CLP90	VANADIUM	MG/KG-DRY	0.500	0.506	101	90-110
06/15/92	CCV*QC*2	1093*CLP90	ZINC	MG/KG-DRY	0.500	0.507	101	90-110
06/15/92	CCV*QC*3	1078*CLP90	SILVER	MG/KG-DRY	0.500	0.501	100	90-110
06/15/92	CCV*QC*3	1108*CLP90	ALUMINUM	MG/KG-DRY	5.00	5.02	100	90-110
06/15/92	CCV*QC*3	1008*CLP90	BARIUM	MG/KG-DRY	0.500	0.498	99.6	90-110
06/15/92	CCV*QC*3	1013*CLP90	BERYLLIUM	MG/KG-DRY	0.500	0.509	102	90-110
06/15/92	CCV*QC*3	917*CLP90	CALCIUM	MG/KG-DRY	5.00	5.07	101	90-110
06/15/92	CCV*QC*3	1028*CLP90	CADMIUM	MG/KG-DRY	0.500	0.497	99.4	90-110
06/15/92	CCV*QC*3	1038*CLP90	COBALT	MG/KG-DRY	0.500	0.496	99.2	90-110
06/15/92	CCV*QC*3	1029*CLP90	CHROMIUM	MG/KG-DRY	0.500	0.492	98.4	90-110
06/15/92	CCV*QC*3	1043*CLP90	COPPER	MG/KG-DRY	0.500	0.497	99.4	90-110
06/15/92	CCV*QC*3	1170*CLP90	IRON	MG/KG-DRY	5.00	5.04	101	90-110

ESE BATCH : G28709

Continuing Calibration Verification Sample Summary

DATE	SAMPLE	STORET	PARAMETER	UNITS	TARGET	FOUND	%RECV	RECV CRIT
06/15/92	CCV*QC*3	938*CLP90	POTASSIUM	MG/KG-DRY	5.00	4.66	93.2	90-110
06/15/92	CCV*QC*3	924*CLP90	MAGNESIUM	MG/KG-DRY	5.00	5.03	101	90-110
06/15/92	CCV*QC*3	1053*CLP90	MANGANESE	MG/KG-DRY	0.500	0.492	98.4	90-110
06/15/92	CCV*QC*3	934*CLP90	SODIUM	MG/KG-DRY	5.00	5.03	101	90-110
06/15/92	CCV*QC*3	1068*CLP90	NICKEL	MG/KG-DRY	0.500	0.493	98.6	90-110
06/15/92	CCV*QC*3	1052*CLP90I	LEAD	MG/KG -DRY	0.500	0.508	102	90-110
06/15/92	CCV*QC*3	1098*CLP90	ANTIMONY	MG/KG-DRY	0.5	0.5	100	90-110
06/15/92	CCV*QC*3	1088*CLP90	VANADIUM	MG/KG-DRY	0.500	0.496	99.2	90-110
06/15/92	CCV*QC*3	1093*CLP90	ZINC	MG/KG-DRY	0.500	0.492	98.4	90-110
06/15/92	CCV*QC*4	1078*CLP90	SILVER	MG/KG-DRY	0.500	0.507	101	90-110
06/15/92	CCV*QC*4	1108*CLP90	ALUMINUM	MG/KG-DRY	5.00	5.13	103	90-110
06/15/92	CCV*QC*4	1008*CLP90	BARIUM	MG/KG-DRY	0.500	0.501	100	90-110
06/15/92	CCV*QC*4	1013*CLP90	BERYLLIUM	MG/KG-DRY	0.500	0.515	103	90-110
06/15/92	CCV*QC*4	917*CLP90	CALCIUM	MG/KG-DRY	5.00	5.16	103	90-110
06/15/92	CCV*QC*4	1028*CLP90	CADMIUM	MG/KG-DRY	0.500	0.496	99.2	90-110
06/15/92	CCV*QC*4	1038*CLP90	COBALT	MG/KG-DRY	0.500	0.507	101	90-110
06/15/92	CCV*QC*4	1029*CLP90	CHROMIUM	MG/KG-DRY	0.500	0.499	99.8	90-110
06/15/92	CCV*QC*4	1043*CLP90	COPPER	MG/KG-DRY	0.500	0.502	100	90-110
06/15/92	CCV*QC*4	1170*CLP90	IRON	MG/KG-DRY	5.00	5.11	102	90-110
06/15/92	CCV*QC*4	938*CLP90	POTASSIUM	MG/KG-DRY	5.00	5.33	107	90-110
06/15/92	CCV*QC*4	924*CLP90	MAGNESIUM	MG/KG-DRY	5.00	5.13	103	90-110
06/15/92	CCV*QC*4	1053*CLP90	MANGANESE	MG/KG-DRY	0.500	0.500	100.0	90-110
06/15/92	CCV*QC*4	934*CLP90	SODIUM	MG/KG-DRY	5.00	5.12	102	90-110
06/15/92	CCV*QC*4	1068*CLP90	NICKEL	MG/KG-DRY	0.500	0.502	100	90-110
06/15/92	CCV*QC*4	1052*CLP90I	LEAD	MG/KG -DRY	0.500	0.524	105	90-110
06/15/92	CCV*QC*4	1098*CLP90	ANTIMONY	MG/KG-DRY	0.5	0.5	100	90-110
06/15/92	CCV*QC*4	1088*CLP90	VANADIUM	MG/KG-DRY	0.500	0.506	101	90-110
06/15/92	CCV*QC*4	1093*CLP90	ZINC	MG/KG-DRY	0.500	0.499	99.8	90-110
06/15/92	CCV*QC*5	1078*CLP90	SILVER	MG/KG-DRY	0.500	0.511	102	90-110
06/15/92	CCV*QC*5	1108*CLP90	ALUMINUM	MG/KG-DRY	5.00	5.15	103	90-110
06/15/92	CCV*QC*5	1008*CLP90	BARIUM	MG/KG-DRY	0.500	0.501	100	90-110
06/15/92	CCV*QC*5	1013*CLP90	BERYLLIUM	MG/KG-DRY	0.500	0.516	103	90-110
06/15/92	CCV*QC*5	917*CLP90	CALCIUM	MG/KG-DRY	5.00	5.18	104	90-110
06/15/92	CCV*QC*5	1028*CLP90	CADMIUM	MG/KG-DRY	0.500	0.498	99.6	90-110
06/15/92	CCV*QC*5	1038*CLP90	COBALT	MG/KG-DRY	0.500	0.505	101	90-110
06/15/92	CCV*QC*5	1029*CLP90	CHROMIUM	MG/KG-DRY	0.500	0.502	100	90-110
06/15/92	CCV*QC*5	1043*CLP90	COPPER	MG/KG-DRY	0.500	0.504	101	90-110
06/15/92	CCV*QC*5	1170*CLP90	IRON	MG/KG-DRY	5.00	5.09	102	90-110
06/15/92	CCV*QC*5	938*CLP90	POTASSIUM	MG/KG-DRY	5.00	5.42	108	90-110
06/15/92	CCV*QC*5	924*CLP90	MAGNESIUM	MG/KG-DRY	5.00	5.17	103	90-110
06/15/92	CCV*QC*5	1053*CLP90	MANGANESE	MG/KG-DRY	0.500	0.501	100	90-110
06/15/92	CCV*QC*5	934*CLP90	SODIUM	MG/KG-DRY	5.00	5.13	103	90-110
06/15/92	CCV*QC*5	1068*CLP90	NICKEL	MG/KG-DRY	0.500	0.498	99.6	90-110
06/15/92	CCV*QC*5	1052*CLP90I	LEAD	MG/KG -DRY	0.500	0.524	105	90-110
06/15/92	CCV*QC*5	1098*CLP90	ANTIMONY	MG/KG-DRY	0.5	0.5	100	90-110
06/15/92	CCV*QC*5	1088*CLP90	VANADIUM	MG/KG-DRY	0.500	0.507	101	90-110
06/15/92	CCV*QC*5	1093*CLP90	ZINC	MG/KG-DRY	0.500	0.503	101	90-110
06/15/92	CCV*QC*6	1078*CLP90	SILVER	MG/KG-DRY	0.500	0.500	100.0	90-110
06/15/92	CCV*QC*6	1108*CLP90	ALUMINUM	MG/KG-DRY	5.00	5.07	101	90-110
06/15/92	CCV*QC*6	1008*CLP90	BARIUM	MG/KG-DRY	0.500	0.494	98.8	90-110
06/15/92	CCV*QC*6	1013*CLP90	BERYLLIUM	MG/KG-DRY	0.500	0.509	102	90-110
06/15/92	CCV*QC*6	917*CLP90	CALCIUM	MG/KG-DRY	5.00	5.06	101	90-110
06/15/92	CCV*QC*6	1028*CLP90	CADMIUM	MG/KG-DRY	0.500	0.490	98.0	90-110
06/15/92	CCV*QC*6	1038*CLP90	COBALT	MG/KG-DRY	0.500	0.495	99.0	90-110
06/15/92	CCV*QC*6	1029*CLP90	CHROMIUM	MG/KG-DRY	0.500	0.488	97.6	90-110
06/15/92	CCV*QC*6	1043*CLP90	COPPER	MG/KG-DRY	0.500	0.496	99.2	90-110
06/15/92	CCV*QC*6	1170*CLP90	IRON	MG/KG-DRY	5.00	5.01	100	90-110
06/15/92	CCV*QC*6	938*CLP90	POTASSIUM	MG/KG-DRY	5.00	5.34	107	90-110
06/15/92	CCV*QC*6	924*CLP90	MAGNESIUM	MG/KG-DRY	5.00	5.07	101	90-110
06/15/92	CCV*QC*6	1053*CLP90	MANGANESE	MG/KG-DRY	0.500	0.493	98.6	90-110
06/15/92	CCV*QC*6	934*CLP90	SODIUM	MG/KG-DRY	5.00	5.03	101	90-110
06/15/92	CCV*QC*6	1068*CLP90	NICKEL	MG/KG-DRY	0.500	0.487	97.4	90-110
06/15/92	CCV*QC*6	1052*CLP90I	LEAD	MG/KG -DRY	0.500	0.489	97.8	90-110
06/15/92	CCV*QC*6	1098*CLP90	ANTIMONY	MG/KG-DRY	0.5	0.5	100	90-110
06/15/92	CCV*QC*6	1088*CLP90	VANADIUM	MG/KG-DRY	0.500	0.498	99.6	90-110
06/15/92	CCV*QC*6	1093*CLP90	ZINC	MG/KG-DRY	0.500	0.492	98.4	90-110
06/15/92	CCV*QC*7	1078*CLP90	SILVER	MG/KG-DRY	0.500	0.499	99.8	90-110
06/15/92	CCV*QC*7	1108*CLP90	ALUMINUM	MG/KG-DRY	5.00	5.05	101	90-110
06/15/92	CCV*QC*7	1008*CLP90	BARIUM	MG/KG-DRY	0.500	0.501	100	90-110
06/15/92	CCV*QC*7	1013*CLP90	BERYLLIUM	MG/KG-DRY	0.500	0.512	102	90-110
06/15/92	CCV*QC*7	917*CLP90	CALCIUM	MG/KG-DRY	5.00	5.08	102	90-110
06/15/92	CCV*QC*7	1028*CLP90	CADMIUM	MG/KG-DRY	0.500	0.489	97.8	90-110
06/15/92	CCV*QC*7	1038*CLP90	COBALT	MG/KG-DRY	0.500	0.498	99.6	90-110
06/15/92	CCV*QC*7	1029*CLP90	CHROMIUM	MG/KG-DRY	0.500	0.495	99.0	90-110
06/15/92	CCV*QC*7	1043*CLP90	COPPER	MG/KG-DRY	0.500	0.499	99.8	90-110
06/15/92	CCV*QC*7	1170*CLP90	IRON	MG/KG-DRY	5.00	5.05	101	90-110
06/15/92	CCV*QC*7	938*CLP90	POTASSIUM	MG/KG-DRY	5.00	4.88	97.6	90-110

ESE BATCH : G28709

Continuing Calibration Verification Sample Summary

DATE	SAMPLE	STORET	PARAMETER	UNITS	TARGET	FOUND	%RECV	RECV CRIT
06/15/92	CCV*QC*7	924*CLP90	MAGNESIUM	MG/KG-DRY	5.00	5.08	102	90-110
06/15/92	CCV*QC*7	1053*CLP90	MANGANESE	MG/KG-DRY	0.500	0.497	99.4	90-110
06/15/92	CCV*QC*7	934*CLP90	SODIUM	MG/KG-DRY	5.00	5.07	101	90-110
06/15/92	CCV*QC*7	1068*CLP90	NICKEL	MG/KG-DRY	0.500	0.500	100.0	90-110
06/15/92	CCV*QC*7	1052*CLP90I	LEAD	MG/KG -DRY	0.500	0.493	98.6	90-110
06/15/92	CCV*QC*7	1098*CLP90	ANTIMONY	MG/KG-DRY	0.5	0.5	100	90-110
06/15/92	CCV*QC*7	1088*CLP90	VANADIUM	MG/KG-DRY	0.500	0.501	100	90-110
06/15/92	CCV*QC*7	1093*CLP90	ZINC	MG/KG-DRY	0.500	0.491	98.2	90-110

Method Blank Sample Summary

DATE	SAMPLE	STORET	PARAMETER	UNITS	FOUND
06/15/92	MB*QC*1	1078*CLP90	SILVER	MG/KG-DRY	ND
06/15/92	MB*QC*1	1108*CLP90	ALUMINUM	MG/KG-DRY	ND
06/15/92	MB*QC*1	1008*CLP90	BARIUM	MG/KG-DRY	ND
06/15/92	MB*QC*1	1013*CLP90	BERYLLIUM	MG/KG-DRY	ND
06/15/92	MB*QC*1	917*CLP90	CALCIUM	MG/KG-DRY	ND
06/15/92	MB*QC*1	1028*CLP90	CADMIUM	MG/KG-DRY	ND
06/15/92	MB*QC*1	1038*CLP90	COBALT	MG/KG-DRY	ND
06/15/92	MB*QC*1	1029*CLP90	CHROMIUM	MG/KG-DRY	ND
06/15/92	MB*QC*1	1043*CLP90	COPPER	MG/KG-DRY	ND
06/15/92	MB*QC*1	1170*CLP90	IRON	MG/KG-DRY	ND
06/15/92	MB*QC*1	938*CLP90	POTASSIUM	MG/KG-DRY	ND
06/15/92	MB*QC*1	924*CLP90	MAGNESIUM	MG/KG-DRY	ND
06/15/92	MB*QC*1	1053*CLP90	MANGANESE	MG/KG-DRY	ND
06/15/92	MB*QC*1	934*CLP90	SODIUM	MG/KG-DRY	ND
06/15/92	MB*QC*1	1068*CLP90	NICKEL	MG/KG-DRY	ND
06/15/92	MB*QC*1	1052*CLP90I	LEAD	MG/KG -DRY	ND
06/15/92	MB*QC*1	1098*CLP90	ANTIMONY	MG/KG-DRY	ND
06/15/92	MB*QC*1	1088*CLP90	VANADIUM	MG/KG-DRY	ND
06/15/92	MB*QC*1	1093*CLP90	ZINC	MG/KG-DRY	ND

Laboratory Control Sample Summary

DATE	SAMPLE	STORET	PARAMETER	%RECV	RECV CRIT	UNITS	TARGET	FOUND
06/15/92	LCS*QC*1	1078*CLP90	SILVER	94.8	80-120	MG/KG-DRY	25.0	23.7
06/15/92	LCS*QC*1	1108*CLP90	ALUMINUM	78.7	80-120	MG/KG-DRY	9510	7480
06/15/92	LCS*QC*1	1008*CLP90	BARIUM	99.6	80-120	MG/KG-DRY	92.0	91.6
06/15/92	LCS*QC*1	1013*CLP90	BERYLLIUM	99.6	80-120	MG/KG-DRY	25.0	24.9
06/15/92	LCS*QC*1	917*CLP90	CALCIUM	90.4	80-120	MG/KG-DRY	7430	6720
06/15/92	LCS*QC*1	1028*CLP90	CADMIUM	97.4	80-120	MG/KG-DRY	116	113
06/15/92	LCS*QC*1	1038*CLP90	COBALT	96.3	80-120	MG/KG-DRY	81.0	78.0
06/15/92	LCS*QC*1	1029*CLP90	CHROMIUM	93.6	80-120	MG/KG-DRY	87.0	81.4
06/15/92	LCS*QC*1	1043*CLP90	COPPER	81.4	80-120	MG/KG-DRY	93.0	75.7
06/15/92	LCS*QC*1	1170*CLP90	IRON	100.8	80-120	MG/KG-DRY	13000	13100
06/15/92	LCS*QC*1	938*CLP90	POTASSIUM	80.3	80-120	MG/KG-DRY	3560	2860
06/15/92	LCS*QC*1	924*CLP90	MAGNESIUM	90.6	80-120	MG/KG-DRY	3500	3170
06/15/92	LCS*QC*1	1053*CLP90	MANGANESE	95.1	80-120	MG/KG-DRY	466	443
06/15/92	LCS*QC*1	934*CLP90	SODIUM	112.6	80-120	MG/KG-DRY	420	473
06/15/92	LCS*QC*1	1068*CLP90	NICKEL	101.9	80-120	MG/KG-DRY	108	110
06/15/92	LCS*QC*1	1052*CLP90I	LEAD	102.2	80-120	MG/KG -DRY	138	141
06/15/92	LCS*QC*1	1098*CLP90	ANTIMONY	70	80-120	MG/KG-DRY	57	40
06/15/92	LCS*QC*1	1088*CLP90	VANADIUM	88.7	80-120	MG/KG-DRY	97.0	86.0
06/15/92	LCS*QC*1	1093*CLP90	ZINC	98.1	80-120	MG/KG-DRY	374	367

Sample Matrix Spike Recovery Summary

DATE	SAMPLE	STORET	PARAMETER	%RECV	RECV CRIT	UNSPIKED	UNITS	TARGET	FOUND	RPD
06/15/92	SPM*ALS2B*68	1078*CLP90	SILVER	93.3	75-125	0.350	MG/KG-DRY	11.9	11.1	
06/15/92	SPM*ALS2B*68	1108*CLP90	ALUMINUM	149.2	75-125	2840	MG/KG-DRY	476	710	
06/15/92	SPM*ALS2B*68	1008*CLP90	BARIUM	97.5	75-125	19.4	MG/KG-DRY	476	464	
06/15/92	SPM*ALS2B*68	1013*CLP90	BERYLLIUM	100.0	75-125	0.491	MG/KG-DRY	11.9	11.9	
06/15/92	SPM*ALS2B*68	917*CLP90	CALCIUM	-142	80-120	8440	MG/KG-DRY	2380	-3370	
06/15/92	SPM*ALS2B*68	1028*CLP90	CADMIUM	95.0	75-125	0.496	MG/KG-DRY	11.9	11.3	
06/15/92	SPM*ALS2B*68	1038*CLP90	COBALT	96.6	75-125	4.45	MG/KG-DRY	119	115	
06/15/92	SPM*ALS2B*68	1029*CLP90	CHROMIUM	98.3	75-125	16.7	MG/KG-DRY	47.6	46.8	
06/15/92	SPM*ALS2B*68	1043*CLP90	COPPER	97.0	75-125	6.02	MG/KG-DRY	59.5	57.7	
06/15/92	SPM*ALS2B*68	1170*CLP90	IRON	327.7	80-120	6110	MG/KG-DRY	238	780	
06/15/92	SPM*ALS2B*68	938*CLP90	POTASSIUM	88.7	80-120	859	MG/KG-DRY	2380	2110	
06/15/92	SPM*ALS2B*68	924*CLP90	MAGNESIUM	98.3	80-120	1890	MG/KG-DRY	2380	2340	
06/15/92	SPM*ALS2B*68	1053*CLP90	MANGANESE	96.6	75-125	64.2	MG/KG-DRY	119	115	
06/15/92	SPM*ALS2B*68	934*CLP90	SODIUM	93.7	80-120	850	MG/KG-DRY	2380	2230	
06/15/92	SPM*ALS2B*68	1068*CLP90	NICKEL	95.8	75-125	14.3	MG/KG-DRY	119	114	
06/15/92	SPM*ALS2B*68	1052*CLP90I	LEAD	94.1	75-125	6.05	MG/KG -DRY	119	112	
06/15/92	SPM*ALS2B*68	1098*CLP90	ANTIMONY	92	75-125	0.5	MG/KG-DRY	120	110	
06/15/92	SPM*ALS2B*68	1088*CLP90	VANADIUM	98.3	75-125	11.8	MG/KG-DRY	119	117	
06/15/92	SPM*ALS2B*68	1093*CLP90	ZINC	95.0	75-125	18.3	MG/KG-DRY	119	113	

ESE BATCH : 628709

Replicate Analysis Sample Summary

DATE	SAMPLE	STORET	PARAMETER	UNITS	REP #1	REP #2	RPD	RPD CRIT

Replicate Analysis Sample Summary

DATE	SAMPLE	STORET	PARAMETER	UNITS	REP #1	REP #2	RPD	RPD CRIT
'5/92	RP*ALS2B*68	1078*CLP90	SILVER	MG/KG-DRY	<1.15	<1.13	1.75	20
.5/92	RP*ALS2B*68	1108*CLP90	ALUMINUM	MG/KG-DRY	2840	3420	18.5	20
06/15/92	RP*ALS2B*68	1008*CLP90	BARIUM	MG/KG-DRY	19.4	14.1	31.6	20
06/15/92	RP*ALS2B*68	1013*CLP90	BERYLLIUM	MG/KG-DRY	<0.599	<0.591	1.34	20
06/15/92	RP*ALS2B*68	917*CLP90	CALCIUM	MG/KG-DRY	8440	9860	15.5	20
06/15/92	RP*ALS2B*68	1028*CLP90	CADMIUM	MG/KG-DRY	<0.934	<0.922	1.29	20
06/15/92	RP*ALS2B*68	1038*CLP90	COBALT	MG/KG-DRY	4.45	4.51	1.34	20
06/15/92	RP*ALS2B*68	1029*CLP90	CHROMIUM	MG/KG-DRY	16.7	17.6	5.25	20
06/15/92	RP*ALS2B*68	1043*CLP90	COPPER	MG/KG-DRY	6.02	4.93	19.9	20
06/15/92	RP*ALS2B*68	1170*CLP90	IRON	MG/KG-DRY	6110	6890	12.0	20
06/15/92	RP*ALS2B*68	938*CLP90	POTASSIUM	MG/KG-DRY	859	882	2.64	20
06/15/92	RP*ALS2B*68	924*CLP90	MAGNESIUM	MG/KG-DRY	1890	2110	11.0	20
06/15/92	RP*ALS2B*68	1053*CLP90	MANGANESE	MG/KG-DRY	64.2	72.9	12.7	20
06/15/92	RP*ALS2B*68	934*CLP90	SODIUM	MG/KG-DRY	850	673	23.2	20
06/15/92	RP*ALS2B*68	1068*CLP90	NICKEL	MG/KG-DRY	14.3	15.4	7.41	20
06/15/92	RP*ALS2B*68	1052*CLP90I	LEAD	MG/KG -DRY	A	12.4	200	20
06/15/92	RP*ALS2B*68	1098*CLP90	ANTIMONY	MG/KG-DRY	<9.0	<8.9	1.1	20
06/15/92	RP*ALS2B*68	1088*CLP90	VANADIUM	MG/KG-DRY	11.8	12.7	7.35	20
06/15/92	RP*ALS2B*68	1093*CLP90	ZINC	MG/KG-DRY	18.3	16.4	11.0	20

Serial Dilution Sample Summary

DATE	SAMPLE	STORET	PARAMETER	UNITS	REP #1	REP #2	RPD	RPD CRIT
06/15/92	SD*ALS2B*68	1078*CLP90	SILVER	MG/KG-DRY	0.350	ND	NC	10
06/15/92	SD*ALS2B*68	1108*CLP90	ALUMINUM	MG/KG-DRY	2840	2720	4.32	10
06/15/92	SD*ALS2B*68	1008*CLP90	BARIUM	MG/KG-DRY	19.4	18.7	3.67	10
06/15/92	SD*ALS2B*68	1013*CLP90	BERYLLIUM	MG/KG-DRY	0.491	1.87	117	10
06/15/92	SD*ALS2B*68	917*CLP90	CALCIUM	MG/KG-DRY	8440	8050	4.73	10
06/15/92	SD*ALS2B*68	1028*CLP90	CADMIUM	MG/KG-DRY	0.496	0.239	69.9	10
06/15/92	SD*ALS2B*68	1038*CLP90	COBALT	MG/KG-DRY	4.45	3.64	20.0	10
06/15/92	SD*ALS2B*68	1029*CLP90	CHROMIUM	MG/KG-DRY	16.7	14.3	15.5	10
06/15/92	SD*ALS2B*68	1043*CLP90	COPPER	MG/KG-DRY	6.02	5.69	5.64	10
06/15/92	SD*ALS2B*68	1170*CLP90	IRON	MG/KG-DRY	6110	5910	3.33	10
06/15/92	SD*ALS2B*68	938*CLP90	POTASSIUM	MG/KG-DRY	859	940	9.01	10
06/15/92	SD*ALS2B*68	924*CLP90	MAGNESIUM	MG/KG-DRY	1890	1810	4.32	10
'5/92	SD*ALS2B*68	1053*CLP90	MANGANESE	MG/KG-DRY	64.2	62.0	3.49	10
5/92	SD*ALS2B*68	934*CLP90	SODIUM	MG/KG-DRY	850	851	0.118	10
.5/92	SD*ALS2B*68	1068*CLP90	NICKEL	MG/KG-DRY	14.3	10.8	27.9	10
06/15/92	SD*ALS2B*68	1052*CLP90I	LEAD	MG/KG -DRY	0.0	23.0	NC	10
06/15/92	SD*ALS2B*68	1098*CLP90	ANTIMONY	MG/KG-DRY	0.5	ND	NC	10
06/15/92	SD*ALS2B*68	1088*CLP90	VANADIUM	MG/KG-DRY	11.8	10.9	7.93	10
06/15/92	SD*ALS2B*68	1093*CLP90	ZINC	MG/KG-DRY	18.3	18.4	0.545	10

ESE BATCH : G28709

Environmental Science and Engineering Analytical Services
Computer QC Checks

Batch No.: G28709 Analysis Date: 06/15/92 Analyst: JEFF MILLER

	Yes	"Exceptions" No	Comment / Corrective Action
Analysis holding time within criteria?	X		
Extract holding time within criteria?	X		
ICB present?	X		
ICB within acceptance criteria?	X		
CCB present?	X		
CCB within acceptance criteria?	X		
ICV present?	X		
ICV within acceptance criteria?	X		
CCV present?	X		
CCV within acceptance criteria?	X		
Method blank present?	X		
Method blank within acceptance criteria?	X		
LCS present?	X		
LCS within acceptance criteria?		X	1098*CLP90
Sample matrix spike present?	X		
Sample matrix spike within acceptance criteria?		X	1108*CLP90
Sample replicate present?	X		
Sample replicate within acceptance criteria?		X	1008*CLP90 934*CLP90 1052*CLP90
SD present?	X		
SD within acceptance criteria?	X		

Note: Any "NO" answer requires a comment.

OVERRIDE COMMENTS

PROB:LCS NOT WITHIN ACCEPTANCE
CRITERIA.
EXPL:% RECOVERY IS WITHIN ADVISORY
RANGE.

PROB:SAMPLE REPLICATE NOT WITHIN
ACCEPTANCE CRITERIA.
EXPL:POSSIBLE LACK OF HOMOGENEITY.JM/6/17/92

ESE BATCH : G28765
CLASSIFICATION : TAL ICAP METALS, WIPE

STATUS : FINAL

METHOD BLANK CORRECTION METHOD : NONE

FLD GRP	PROJECT NUMBER	PROJECT NAME	LAB COORDINATOR
2B	3914042 0201	JMM/ALAMEDA CTO-121	JACKIE HARGROVE-ELLI

SAMPLE CODE	CLIENT ID	DATE ANALYZED	TIME ANALYZED
ALS2B*5	W04-07	06/16/92	05:39PM
ALS2B*6	W04-08	06/16/92	05:52PM
ALS2B*7	W04-09	06/16/92	05:54PM
ALS2B*8	W04-10	06/16/92	06:08PM
ALS2B*9	W04-11	06/16/92	06:10PM
ALS2B*10	W04-12	06/16/92	06:19PM
ALS2B*11	W04-13	06/16/92	06:26PM
ALS2B*12	W04-14	06/16/92	06:32PM
ALS2B*13	W04-DUP	06/16/92	06:41PM
ALS2B*23	W05-10	06/16/92	06:54PM
ALS2B*24	W05-11	06/16/92	06:56PM
ALS2B*25	W05-12	06/16/92	07:02PM

ESE BATCH : G28765

Initial Calibration Blank Summary

DATE	SAMPLE	STORET	PARAMETER	UNITS	FOUND
06/16/92	ICB*QC*1	99782*ICAP	VANADIUM,TOTAL	UG	0.002
06/16/92	ICB*QC*1	99052*ICAP	SILVER	UG	0.0004
06/16/92	ICB*QC*1	99035*ICAP	ALUMINIUM	UG	ND
06/16/92	ICB*QC*1	99038*ICAP	BARIUM	UG	ND
06/16/92	ICB*QC*1	99039*ICAP	BERYLLIUM	UG	ND
06/16/92	ICB*QC*1	99041*ICAP	CALCIUM,TOTAL CA	UG	ND
06/16/92	ICB*QC*1	99776*ICAP	CADMIUM	UG	ND
06/16/92	ICB*QC*1	99042*ICAP	COBALT,TOTAL UG	UG	ND
06/16/92	ICB*QC*1	99778*ICAP	CHROMIUM	UG	ND
06/16/92	ICB*QC*1	99779*ICAP	COPPER	UG	ND
06/16/92	ICB*QC*1	96597*ICAP	IRON	UG	0.0001
06/16/92	ICB*QC*1	99044*ICAP	POTASSIUM,TOTAL K	UG	0.110
06/16/92	ICB*QC*1	99045*ICAP	MAGNESIUM,TOTAL	UG	0.005
06/16/92	ICB*QC*1	99046*ICAP	MANGANESE	UG	ND
06/16/92	ICB*QC*1	99053*ICAP	SODIUM,TOTAL NA	UG	ND
06/16/92	ICB*QC*1	99777*ICAP	NICKEL	UG	0.004
06/16/92	ICB*QC*1	99775*ICAP	LEAD	UG	ND
06/16/92	ICB*QC*1	96599*ICAP	ANTIMONY	UG	0.006
06/16/92	ICB*QC*1	99055*ICAP	THALLIUM	UG	0.010
06/16/92	ICB*QC*1	99780*ICAP	ZINC	UG	ND

Continuing Calibration Blank Sample Summary

DATE	SAMPLE	STORET	PARAMETER	UNITS	FOUND
06/16/92	CCB*QC*1	99782*ICAP	VANADIUM,TOTAL	UG	ND
06/16/92	CCB*QC*1	99052*ICAP	SILVER	UG	ND
06/16/92	CCB*QC*1	99035*ICAP	ALUMINIUM	UG	ND
06/16/92	CCB*QC*1	99038*ICAP	BARIUM	UG	ND
06/16/92	CCB*QC*1	99039*ICAP	BERYLLIUM	UG	ND
06/16/92	CCB*QC*1	99041*ICAP	CALCIUM,TOTAL CA	UG	ND
06/16/92	CCB*QC*1	99776*ICAP	CADMIUM	UG	0.0004
06/16/92	CCB*QC*1	99042*ICAP	COBALT,TOTAL UG	UG	ND
06/16/92	CCB*QC*1	99778*ICAP	CHROMIUM	UG	ND
06/16/92	CCB*QC*1	99779*ICAP	COPPER	UG	ND
06/16/92	CCB*QC*1	96597*ICAP	IRON	UG	ND
06/16/92	CCB*QC*1	99044*ICAP	POTASSIUM,TOTAL K	UG	0.017
06/16/92	CCB*QC*1	99045*ICAP	MAGNESIUM,TOTAL	UG	ND
06/16/92	CCB*QC*1	99046*ICAP	MANGANESE	UG	ND
06/16/92	CCB*QC*1	99053*ICAP	SODIUM,TOTAL NA	UG	0.014
06/16/92	CCB*QC*1	99777*ICAP	NICKEL	UG	0.003
06/16/92	CCB*QC*1	99775*ICAP	LEAD	UG	ND
06/16/92	CCB*QC*1	96599*ICAP	ANTIMONY	UG	ND
06/16/92	CCB*QC*1	99055*ICAP	THALLIUM	UG	ND
06/16/92	CCB*QC*1	99780*ICAP	ZINC	UG	ND
06/16/92	CCB*QC*2	99782*ICAP	VANADIUM,TOTAL	UG	0.002
06/16/92	CCB*QC*2	99052*ICAP	SILVER	UG	0.0007
06/16/92	CCB*QC*2	99035*ICAP	ALUMINIUM	UG	ND
06/16/92	CCB*QC*2	99038*ICAP	BARIUM	UG	ND
06/16/92	CCB*QC*2	99039*ICAP	BERYLLIUM	UG	0.001
06/16/92	CCB*QC*2	99041*ICAP	CALCIUM,TOTAL CA	UG	ND
06/16/92	CCB*QC*2	99776*ICAP	CADMIUM	UG	ND
06/16/92	CCB*QC*2	99042*ICAP	COBALT,TOTAL UG	UG	ND
06/16/92	CCB*QC*2	99778*ICAP	CHROMIUM	UG	0.0006
06/16/92	CCB*QC*2	99779*ICAP	COPPER	UG	0.002
06/16/92	CCB*QC*2	96597*ICAP	IRON	UG	0.002
06/16/92	CCB*QC*2	99044*ICAP	POTASSIUM,TOTAL K	UG	0.051
06/16/92	CCB*QC*2	99045*ICAP	MAGNESIUM,TOTAL	UG	ND
06/16/92	CCB*QC*2	99046*ICAP	MANGANESE	UG	ND
06/16/92	CCB*QC*2	99053*ICAP	SODIUM,TOTAL NA	UG	0.003
06/16/92	CCB*QC*2	99777*ICAP	NICKEL	UG	0.004
06/16/92	CCB*QC*2	99775*ICAP	LEAD	UG	ND
06/16/92	CCB*QC*2	96599*ICAP	ANTIMONY	UG	0.002
06/16/92	CCB*QC*2	99055*ICAP	THALLIUM	UG	ND
06/16/92	CCB*QC*2	99780*ICAP	ZINC	UG	0.0001
06/16/92	CCB*QC*3	99782*ICAP	VANADIUM,TOTAL	UG	0.003
06/16/92	CCB*QC*3	99052*ICAP	SILVER	UG	ND
06/16/92	CCB*QC*3	99035*ICAP	ALUMINIUM	UG	ND
06/16/92	CCB*QC*3	99038*ICAP	BARIUM	UG	ND
06/16/92	CCB*QC*3	99039*ICAP	BERYLLIUM	UG	0.002
06/16/92	CCB*QC*3	99041*ICAP	CALCIUM,TOTAL CA	UG	0.002
06/16/92	CCB*QC*3	99776*ICAP	CADMIUM	UG	ND
06/16/92	CCB*QC*3	99042*ICAP	COBALT,TOTAL UG	UG	ND
06/16/92	CCB*QC*3	99778*ICAP	CHROMIUM	UG	ND
06/16/92	CCB*QC*3	99779*ICAP	COPPER	UG	0.001
06/16/92	CCB*QC*3	96597*ICAP	IRON	UG	0.001
06/16/92	CCB*QC*3	99044*ICAP	POTASSIUM,TOTAL K	UG	0.213
06/16/92	CCB*QC*3	99045*ICAP	MAGNESIUM,TOTAL	UG	0.005

Continuing Calibration Blank Sample Summary

DATE	SAMPLE	STORET	PARAMETER	UNITS	FOUND
06/16/92	CCB*QC*3	99046*ICAP	MANGANESE	UG	ND
06/16/92	CCB*QC*3	99053*ICAP	SODIUM,TOTAL NA	UG	0.016
06/16/92	CCB*QC*3	99777*ICAP	NICKEL	UG	0.001
06/16/92	CCB*QC*3	99775*ICAP	LEAD	UG	ND
16/92	CCB*QC*3	96599*ICAP	ANTIMONY	UG	0.004
.6/92	CCB*QC*3	99055*ICAP	THALLIUM	UG	ND
16/92	CCB*QC*3	99780*ICAP	ZINC	UG	0.0003

Initial Calibration Verification Sample Summary

DATE	SAMPLE	STORET	PARAMETER	UNITS	TARGET	FOUND	%RECV	RECV CRIT
06/16/92	ICV*ICAP19*1	99782*ICAP	VANADIUM,TOTAL	UG	1.00	1.02	102	90-110
06/16/92	ICV*ICAP19*1	99052*ICAP	SILVER	UG		ND		90-110
06/16/92	ICV*ICAP19*1	99035*ICAP	ALUMINIUM	UG		ND		90-110
06/16/92	ICV*ICAP19*1	99038*ICAP	BARIUM	UG		ND		90-110
06/16/92	ICV*ICAP19*1	99039*ICAP	BERYLLIUM	UG	1.00	1.01	101	90-110
06/16/92	ICV*ICAP19*1	99041*ICAP	CALCIUM,TOTAL CA	UG	1.00	1.05	105	90-110
06/16/92	ICV*ICAP19*1	99776*ICAP	CADMIUM	UG	1.00	1.01	101	90-110
06/16/92	ICV*ICAP19*1	99042*ICAP	COBALT,TOTAL UG	UG	1.00	1.01	101	90-110
06/16/92	ICV*ICAP19*1	99778*ICAP	CHROMIUM	UG	1.00	1.02	102	90-110
06/16/92	ICV*ICAP19*1	99779*ICAP	COPPER	UG	1.00	1.02	102	90-110
06/16/92	ICV*ICAP19*1	96597*ICAP	IRON	UG	1.00	1.04	104	90-110
06/16/92	ICV*ICAP19*1	99044*ICAP	POTASSIUM,TOTAL K	UG		ND		90-110
06/16/92	ICV*ICAP19*1	99045*ICAP	MAGNESIUM,TOTAL	UG	1.00	1.02	102	90-110
06/16/92	ICV*ICAP19*1	99046*ICAP	MANGANESE	UG	1.00	1.02	102	90-110
06/16/92	ICV*ICAP19*1	99053*ICAP	SODIUM,TOTAL NA	UG		ND		90-110
06/16/92	ICV*ICAP19*1	99777*ICAP	NICKEL	UG	1.00	1.02	102	90-110
06/16/92	ICV*ICAP19*1	99775*ICAP	LEAD	UG	1.00	1.03	103	90-110
06/16/92	ICV*ICAP19*1	96599*ICAP	ANTIMONY	UG	1.00	1.01	101	90-110
06/16/92	ICV*ICAP19*1	99055*ICAP	THALLIUM	UG	1.00	1.06	106	90-110
06/16/92	ICV*ICAP19*1	99780*ICAP	ZINC	UG	1.00	1.02	102	90-110
06/16/92	ICV*ICAP7*1	99782*ICAP	VANADIUM,TOTAL	UG		ND		90-110
06/16/92	ICV*ICAP7*1	99052*ICAP	SILVER	UG	1.00	1.01	101	90-110
06/16/92	ICV*ICAP7*1	99035*ICAP	ALUMINIUM	UG	1.00	1.01	101	90-110
06/16/92	ICV*ICAP7*1	99038*ICAP	BARIUM	UG	1.00	1.03	103	90-110
06/16/92	ICV*ICAP7*1	99039*ICAP	BERYLLIUM	UG		ND		90-110
06/16/92	ICV*ICAP7*1	99041*ICAP	CALCIUM,TOTAL CA	UG		ND		90-110
06/16/92	ICV*ICAP7*1	99776*ICAP	CADMIUM	UG		ND		90-110
06/16/92	ICV*ICAP7*1	99042*ICAP	COBALT,TOTAL UG	UG		ND		90-110
16/92	ICV*ICAP7*1	99778*ICAP	CHROMIUM	UG		ND		90-110
6/92	ICV*ICAP7*1	99779*ICAP	COPPER	UG		ND		90-110
6/92	ICV*ICAP7*1	96597*ICAP	IRON	UG		ND		90-110
06/16/92	ICV*ICAP7*1	99044*ICAP	POTASSIUM,TOTAL K	UG	10.00	10.2	102	90-110
06/16/92	ICV*ICAP7*1	99045*ICAP	MAGNESIUM,TOTAL	UG		ND		90-110
06/16/92	ICV*ICAP7*1	99046*ICAP	MANGANESE	UG		ND		90-110
06/16/92	ICV*ICAP7*1	99053*ICAP	SODIUM,TOTAL NA	UG	1.00	1.05	105	90-110
06/16/92	ICV*ICAP7*1	99777*ICAP	NICKEL	UG		ND		90-110
06/16/92	ICV*ICAP7*1	99775*ICAP	LEAD	UG		ND		90-110
06/16/92	ICV*ICAP7*1	96599*ICAP	ANTIMONY	UG		ND		90-110
06/16/92	ICV*ICAP7*1	99055*ICAP	THALLIUM	UG		ND		90-110
06/16/92	ICV*ICAP7*1	99780*ICAP	ZINC	UG		ND		90-110

Continuing Calibration Verification Sample Summary

DATE	SAMPLE	STORET	PARAMETER	UNITS	TARGET	FOUND	%RECV	RECV CRIT
06/16/92	CCV*QC*1	99782*ICAP	VANADIUM,TOTAL	UG	0.500	0.513	103	80-120
06/16/92	CCV*QC*1	99052*ICAP	SILVER	UG	0.500	0.507	101	80-120
06/16/92	CCV*QC*1	99035*ICAP	ALUMINIUM	UG	5.00	5.11	102	80-120
06/16/92	CCV*QC*1	99038*ICAP	BARIUM	UG	0.500	0.509	102	80-120
06/16/92	CCV*QC*1	99039*ICAP	BERYLLIUM	UG	0.500	0.518	104	80-120
06/16/92	CCV*QC*1	99041*ICAP	CALCIUM,TOTAL CA	UG	5.00	5.11	102	80-120
06/16/92	CCV*QC*1	99776*ICAP	CADMIUM	UG	0.500	0.503	101	80-120
06/16/92	CCV*QC*1	99042*ICAP	COBALT,TOTAL UG	UG	0.500	0.504	101	80-120
06/16/92	CCV*QC*1	99778*ICAP	CHROMIUM	UG	0.500	0.505	101	80-120
06/16/92	CCV*QC*1	99779*ICAP	COPPER	UG	0.500	0.511	102	80-120
06/16/92	CCV*QC*1	96597*ICAP	IRON	UG	5.00	5.17	103	80-120
06/16/92	CCV*QC*1	99044*ICAP	POTASSIUM,TOTAL K	UG	5.00	5.20	104	80-120
06/16/92	CCV*QC*1	99045*ICAP	MAGNESIUM,TOTAL	UG	5.00	5.12	102	80-120
06/16/92	CCV*QC*1	99046*ICAP	MANGANESE	UG	0.500	0.504	101	80-120
06/16/92	CCV*QC*1	99053*ICAP	SODIUM,TOTAL NA	UG	5.00	5.03	101	80-120
06/16/92	CCV*QC*1	99777*ICAP	NICKEL	UG	0.500	0.516	103	80-120
06/16/92	CCV*QC*1	99775*ICAP	LEAD	UG	0.500	0.488	97.6	80-120
06/16/92	CCV*QC*1	96599*ICAP	ANTIMONY	UG	0.500	0.502	100	80-120
06/16/92	CCV*QC*1	99055*ICAP	THALLIUM	UG	0.700	0.692	98.9	80-120
6/92	CCV*QC*1	99780*ICAP	ZINC	UG	0.500	0.502	100	80-120
/92	CCV*QC*2	99782*ICAP	VANADIUM,TOTAL	UG	0.500	0.505	101	80-120
/92	CCV*QC*2	99052*ICAP	SILVER	UG	0.500	0.505	101	80-120

ESE BATCH : 628765

Continuing Calibration Verification Sample Summary

DATE	SAMPLE	STORET	PARAMETER	UNITS	TARGET	FOUND	%RECV	RECV CRIT
06/16/92	CCV*QC*2	99035*ICAP	ALUMINIUM	UG	5.00	5.14	103	80-120
06/16/92	CCV*QC*2	99038*ICAP	BARIUM	UG	0.500	0.510	102	80-120
06/16/92	CCV*QC*2	99039*ICAP	BERYLLIUM	UG	0.500	0.516	103	80-120
06/16/92	CCV*QC*2	99041*ICAP	CALCIUM,TOTAL CA	UG	5.00	5.20	104	80-120
06/16/92	CCV*QC*2	99776*ICAP	CADMIUM	UG	0.500	0.502	100	80-120
06/16/92	CCV*QC*2	99042*ICAP	COBALT,TOTAL UG	UG	0.500	0.502	100	80-120
06/16/92	CCV*QC*2	99778*ICAP	CHROMIUM	UG	0.500	0.505	101	80-120
06/16/92	CCV*QC*2	99779*ICAP	COPPER	UG	0.500	0.513	103	80-120
06/16/92	CCV*QC*2	96597*ICAP	IRON	UG	5.00	5.17	103	80-120
06/16/92	CCV*QC*2	99044*ICAP	POTASSIUM,TOTAL K	UG	5.00	5.04	101	80-120
06/16/92	CCV*QC*2	99045*ICAP	MAGNESIUM,TOTAL	UG	5.00	5.13	103	80-120
06/16/92	CCV*QC*2	99046*ICAP	MANGANESE	UG	0.500	0.508	102	80-120
06/16/92	CCV*QC*2	99053*ICAP	SODIUM,TOTAL NA	UG	5.00	5.13	103	80-120
06/16/92	CCV*QC*2	99777*ICAP	NICKEL	UG	0.500	0.514	103	80-120
06/16/92	CCV*QC*2	99775*ICAP	LEAD	UG	0.500	0.518	104	80-120
06/16/92	CCV*QC*2	96599*ICAP	ANTIMONY	UG	0.500	0.489	97.8	80-120
06/16/92	CCV*QC*2	99055*ICAP	THALLIUM	UG	0.700	0.702	100	80-120
06/16/92	CCV*QC*2	99780*ICAP	ZINC	UG	0.500	0.504	101	80-120
06/16/92	CCV*QC*3	99782*ICAP	VANADIUM,TOTAL	UG	0.500	0.510	102	80-120
06/16/92	CCV*QC*3	99052*ICAP	SILVER	UG	0.500	0.515	103	80-120
06/16/92	CCV*QC*3	99035*ICAP	ALUMINIUM	UG	5.00	5.18	104	80-120
06/16/92	CCV*QC*3	99038*ICAP	BARIUM	UG	0.500	0.519	104	80-120
06/16/92	CCV*QC*3	99039*ICAP	BERYLLIUM	UG	0.500	0.515	103	80-120
06/16/92	CCV*QC*3	99041*ICAP	CALCIUM,TOTAL CA	UG	5.00	5.18	104	80-120
06/16/92	CCV*QC*3	99776*ICAP	CADMIUM	UG	0.500	0.500	100.0	80-120
06/16/92	CCV*QC*3	99042*ICAP	COBALT,TOTAL UG	UG	0.500	0.501	100	80-120
06/16/92	CCV*QC*3	99778*ICAP	CHROMIUM	UG	0.500	0.506	101	80-120
06/16/92	CCV*QC*3	99779*ICAP	COPPER	UG	0.500	0.516	103	80-120
06/16/92	CCV*QC*3	96597*ICAP	IRON	UG	5.00	5.14	103	80-120
06/16/92	CCV*QC*3	99044*ICAP	POTASSIUM,TOTAL K	UG	5.00	5.15	103	80-120
06/16/92	CCV*QC*3	99045*ICAP	MAGNESIUM,TOTAL	UG	5.00	5.13	103	80-120
06/16/92	CCV*QC*3	99046*ICAP	MANGANESE	UG	0.500	0.507	101	80-120
06/16/92	CCV*QC*3	99053*ICAP	SODIUM,TOTAL NA	UG	5.00	5.18	104	80-120
06/16/92	CCV*QC*3	99777*ICAP	NICKEL	UG	0.500	0.498	99.6	80-120
06/16/92	CCV*QC*3	99775*ICAP	LEAD	UG	0.500	0.512	102	80-120
06/16/92	CCV*QC*3	96599*ICAP	ANTIMONY	UG	0.500	0.496	99.2	80-120
06/16/92	CCV*QC*3	99055*ICAP	THALLIUM	UG	0.700	0.726	104	80-120
06/16/92	CCV*QC*3	99780*ICAP	ZINC	UG	0.500	0.512	102	80-120
06/16/92	CCV*QC*4	99782*ICAP	VANADIUM,TOTAL	UG	0.500	0.517	103	80-120
06/16/92	CCV*QC*4	99052*ICAP	SILVER	UG	0.500	0.512	102	80-120
06/16/92	CCV*QC*4	99035*ICAP	ALUMINIUM	UG	5.00	5.23	105	80-120
06/16/92	CCV*QC*4	99038*ICAP	BARIUM	UG	0.500	0.512	102	80-120
06/16/92	CCV*QC*4	99039*ICAP	BERYLLIUM	UG	0.500	0.522	104	80-120
06/16/92	CCV*QC*4	99041*ICAP	CALCIUM,TOTAL CA	UG	5.00	5.29	106	80-120
06/16/92	CCV*QC*4	99776*ICAP	CADMIUM	UG	0.500	0.506	101	80-120
06/16/92	CCV*QC*4	99042*ICAP	COBALT,TOTAL UG	UG	0.500	0.506	101	80-120
06/16/92	CCV*QC*4	99778*ICAP	CHROMIUM	UG	0.500	0.510	102	80-120
06/16/92	CCV*QC*4	99779*ICAP	COPPER	UG	0.500	0.520	104	80-120
06/16/92	CCV*QC*4	96597*ICAP	IRON	UG	5.00	5.20	104	80-120
06/16/92	CCV*QC*4	99044*ICAP	POTASSIUM,TOTAL K	UG	5.00	5.14	103	80-120
06/16/92	CCV*QC*4	99045*ICAP	MAGNESIUM,TOTAL	UG	5.00	5.21	104	80-120
06/16/92	CCV*QC*4	99046*ICAP	MANGANESE	UG	0.500	0.512	102	80-120
06/16/92	CCV*QC*4	99053*ICAP	SODIUM,TOTAL NA	UG	5.00	5.19	104	80-120
06/16/92	CCV*QC*4	99777*ICAP	NICKEL	UG	0.500	0.509	102	80-120
06/16/92	CCV*QC*4	99775*ICAP	LEAD	UG	0.500	0.513	103	80-120
06/16/92	CCV*QC*4	96599*ICAP	ANTIMONY	UG	0.500	0.500	100.0	80-120
06/16/92	CCV*QC*4	99055*ICAP	THALLIUM	UG	0.700	0.703	100	80-120
06/16/92	CCV*QC*4	99780*ICAP	ZINC	UG	0.500	0.506	101	80-120

Method Blank Sample Summary

DATE	SAMPLE	STORET	PARAMETER	UNITS	FOUND
06/16/92	MB*QC*1	99782*ICAP	VANADIUM,TOTAL	UG	ND
06/16/92	MB*QC*1	99052*ICAP	SILVER	UG	ND
06/16/92	MB*QC*1	99035*ICAP	ALUMINIUM	UG	ND
06/16/92	MB*QC*1	99038*ICAP	BARIUM	UG	ND
06/16/92	MB*QC*1	99039*ICAP	BERYLLIUM	UG	ND
06/16/92	MB*QC*1	99041*ICAP	CALCIUM,TOTAL CA	UG	0.098
06/16/92	MB*QC*1	99776*ICAP	CADMIUM	UG	ND
06/16/92	MB*QC*1	99042*ICAP	COBALT,TOTAL UG	UG	ND
06/16/92	MB*QC*1	99778*ICAP	CHROMIUM	UG	ND
06/16/92	MB*QC*1	99779*ICAP	COPPER	UG	ND
06/16/92	MB*QC*1	96597*ICAP	IRON	UG	ND
06/16/92	MB*QC*1	99044*ICAP	POTASSIUM,TOTAL K	UG	ND
06/16/92	MB*QC*1	99045*ICAP	MAGNESIUM,TOTAL	UG	ND
06/16/92	MB*QC*1	99046*ICAP	MANGANESE	UG	0.002
06/16/92	MB*QC*1	99053*ICAP	SODIUM,TOTAL NA	UG	0.065

ESE BATCH : 028765

Method Blank Sample Summary

DATE	SAMPLE	STORET	PARAMETER	UNITS	FOUND
06/16/92	MB*QC*1	99777*ICAP	NICKEL	UG	ND
06/16/92	MB*QC*1	99775*ICAP	LEAD	UG	ND
06/16/92	MB*QC*1	96599*ICAP	ANTIMONY	UG	ND
06/16/92	MB*QC*1	99055*ICAP	THALLIUM	UG	ND
06/16/92	MB*QC*1	99780*ICAP	ZINC	UG	ND

Standard Matrix Spike Recovery Summary

DATE	SAMPLE	STORET	PARAMETER	%RECV	RECV CRIT	UNITS	TARGET	FOUND
06/16/92	SP*QC*1	99782*ICAP	VANADIUM,TOTAL	99.0	87-105	UG	0.500	0.495
06/16/92	SP*QC*1	99052*ICAP	SILVER	98.0	73-107	UG	0.050	0.049
06/16/92	SP*QC*1	99035*ICAP	ALUMINIUM	100.5	81-113	UG	2.00	2.01
06/16/92	SP*QC*1	99038*ICAP	BARIUM	100.5	86-106	UG	2.00	2.01
06/16/92	SP*QC*1	99039*ICAP	BERYLLIUM	94.0	78-108	UG	0.050	0.047
06/16/92	SP*QC*1	99041*ICAP	CALCIUM,TOTAL CA	100.0	80-120	UG	10.00	10.00
06/16/92	SP*QC*1	99776*ICAP	CADMIUM	96.0	80-108	UG	0.050	0.048
06/16/92	SP*QC*1	99042*ICAP	COBALT,TOTAL UG	97.6	84-108	UG	0.500	0.488
06/16/92	SP*QC*1	99778*ICAP	CHROMIUM	98.5	79-109	UG	0.200	0.197
06/16/92	SP*QC*1	99779*ICAP	COPPER	99.2	84-108	UG	0.250	0.248
06/16/92	SP*QC*1	96597*ICAP	IRON	101.0	77-113	UG	1.00	1.01
06/16/92	SP*QC*1	99044*ICAP	POTASSIUM,TOTAL K	98.1	80-120	UG	10.00	9.81
06/16/92	SP*QC*1	99045*ICAP	MAGNESIUM,TOTAL	98.8	80-120	UG	10.00	9.88
06/16/92	SP*QC*1	99046*ICAP	MANGANESE	97.8	83-107	UG	0.500	0.489
06/16/92	SP*QC*1	99053*ICAP	SODIUM,TOTAL NA	99.3	80-120	UG	10.00	9.93
06/16/92	SP*QC*1	99777*ICAP	NICKEL	95.8	78-106	UG	0.500	0.479
06/16/92	SP*QC*1	99775*ICAP	LEAD	97.6	79-109	UG	0.500	0.488
06/16/92	SP*QC*1	96599*ICAP	ANTIMONY	97.8	79-109	UG	0.500	0.489
06/16/92	SP*QC*1	99055*ICAP	THALLIUM	98.0	75-111	UG	2.00	1.96
06/16/92	SP*QC*1	99780*ICAP	ZINC	98.6	76-112	UG	0.500	0.493

Serial Dilution Sample Summary

DATE	SAMPLE	STORET	PARAMETER	UNITS	REP #1	REP #2	RPD	RPD CRIT
06/16/92	SD*ALS2B*5	99782*ICAP	VANADIUM,TOTAL	UG	1.88	3.00	45.9	10
06/16/92	SD*ALS2B*5	99052*ICAP	SILVER	UG	17.6	16.5	6.45	10
06/16/92	SD*ALS2B*5	99035*ICAP	ALUMINIUM	UG	8270	8360	1.08	10
06/16/92	SD*ALS2B*5	99038*ICAP	BARIUM	UG	12300	11600	5.86	10
06/16/92	SD*ALS2B*5	99039*ICAP	BERYLLIUM	UG	0.180	ND	NC	10
06/16/92	SD*ALS2B*5	99041*ICAP	CALCIUM,TOTAL CA	UG	4440	4480	0.897	10
06/16/92	SD*ALS2B*5	99776*ICAP	CADMIUM	UG	25.1	24.3	3.24	10
06/16/92	SD*ALS2B*5	99042*ICAP	COBALT,TOTAL UG	UG	46.1	46.3	0.433	10
06/16/92	SD*ALS2B*5	99778*ICAP	CHROMIUM	UG	292	294	0.683	10
06/16/92	SD*ALS2B*5	99779*ICAP	COPPER	UG	104	105	0.957	10
06/16/92	SD*ALS2B*5	96597*ICAP	IRON	UG	1960	2000	2.02	10
06/16/92	SD*ALS2B*5	99044*ICAP	POTASSIUM,TOTAL K	UG	6480	6380	1.56	10
06/16/92	SD*ALS2B*5	99045*ICAP	MAGNESIUM,TOTAL	UG	772	759	1.70	10
06/16/92	SD*ALS2B*5	99046*ICAP	MANGANESE	UG	19.9	20.3	1.99	10
06/16/92	SD*ALS2B*5	99053*ICAP	SODIUM,TOTAL NA	UG	20600	21000	1.92	10
06/16/92	SD*ALS2B*5	99777*ICAP	NICKEL	UG	2380	2410	1.25	10
06/16/92	SD*ALS2B*5	99775*ICAP	LEAD	UG	179	170	5.16	10
06/16/92	SD*ALS2B*5	96599*ICAP	ANTIMONY	UG	12.7	8.97	34.4	10
06/16/92	SD*ALS2B*5	99055*ICAP	THALLIUM	UG	5.98	9.85	48.9	10
06/16/92	SD*ALS2B*5	99780*ICAP	ZINC	UG	8440	8600	1.88	10

Spike Into Matrix Recovery Summary

DATE	SAMPLE	STORET	PARAMETER	%RECV	RECV CRIT	UNITS	TARGET	FOUND
06/16/92	SPX*ALS2B*5	99782*ICAP	VANADIUM,TOTAL	101.0	85-115	UG	0.500	0.505
06/16/92	SPX*ALS2B*5	99052*ICAP	SILVER	100.6	85-115	UG	0.500	0.503
06/16/92	SPX*ALS2B*5	99035*ICAP	ALUMINIUM	101.2	85-115	UG	5.00	5.06
06/16/92	SPX*ALS2B*5	99038*ICAP	BARIUM	-448	85-115	UG	0.500	-2.24
06/16/92	SPX*ALS2B*5	99039*ICAP	BERYLLIUM	103.6	85-115	UG	0.500	0.518
06/16/92	SPX*ALS2B*5	99041*ICAP	CALCIUM,TOTAL CA	101.6	85-115	UG	5.00	5.08
06/16/92	SPX*ALS2B*5	99776*ICAP	CADMIUM	100.4	85-115	UG	0.500	0.502
06/16/92	SPX*ALS2B*5	99042*ICAP	COBALT,TOTAL UG	100.0	85-115	UG	0.500	0.500
06/16/92	SPX*ALS2B*5	99778*ICAP	CHROMIUM	100.4	85-115	UG	0.500	0.502
06/16/92	SPX*ALS2B*5	99779*ICAP	COPPER	102.2	85-115	UG	0.500	0.511
06/16/92	SPX*ALS2B*5	96597*ICAP	IRON	102.4	85-115	UG	5.00	5.12
06/16/92	SPX*ALS2B*5	99044*ICAP	POTASSIUM,TOTAL K	100.2	85-115	UG	5.00	5.01
06/16/92	SPX*ALS2B*5	99045*ICAP	MAGNESIUM,TOTAL	101.8	85-115	UG	5.00	5.09
06/16/92	SPX*ALS2B*5	99046*ICAP	MANGANESE	99.6	85-115	UG	0.500	0.498
06/16/92	SPX*ALS2B*5	99053*ICAP	SODIUM,TOTAL NA	97.8	85-115	UG	5.00	4.89
06/16/92	SPX*ALS2B*5	99777*ICAP	NICKEL	104.8	85-115	UG	0.500	0.524
06/16/92	SPX*ALS2B*5	99775*ICAP	LEAD	95.0	85-115	UG	0.500	0.475
06/16/92	SPX*ALS2B*5	96599*ICAP	ANTIMONY	99.8	85-115	UG	0.500	0.499
06/16/92	SPX*ALS2B*5	99055*ICAP	THALLIUM	97.3	85-115	UG	0.700	0.681
06/16/92	SPX*ALS2B*5	99780*ICAP	ZINC	162.0	85-115	UG	0.500	0.810

ESE BATCH : G28765

Environmental Science and Engineering Analytical Services
Computer QC Checks

Batch No.: G28765 Analysis Date: 06/16/92 Analyst: GARRY PRICE

	Yes	"Exceptions" No	Comment / Corrective Action
Analysis holding time within criteria?	X		
Extract holding time within criteria?	X		
ICV present?	X		
ICV within acceptance criteria?	X		
CCV present?	X		
CCV within acceptance criteria?	X		
Method blank present?	X		
Method blank within acceptance criteria?	X		
Standard matrix spike present?	X		
Standard matrix spike within acceptance criteria?	X		

Note: Any "NO" answer requires a comment.

ESE BATCH : G28800
CLASSIFICATION : TAL METALS - CLP SOW 3/90

STATUS : FINAL

METHOD BLANK CORRECTION METHOD : NONE

FLD GRP	PROJECT NUMBER	PROJECT NAME	LAB COORDINATOR
B	3914042 0201	JMM/ALAMEDA CTO-121	JACKIE HARGROVE-ELLI

SAMPLE CODE	CLIENT ID	DATE ANALYZED	TIME ANALYZED
ALS2B*1	W04-03	06/17/92	02:23PM
ALS2B*2	W04-04	06/17/92	02:23PM
ALS2B*3	W04-05	06/17/92	03:25PM
ALS2B*4	W04-06	06/17/92	03:30PM

ESE BATCH : G28800

Initial Calibration Blank Summary

DATE	SAMPLE	STORET	PARAMETER	UNITS	FOUND
06/17/92	ICB*QC*1	1078*CLP90	SILVER	MG/KG-DRY	ND
06/17/92	ICB*QC*1	1108*CLP90	ALUMINUM	MG/KG-DRY	ND
06/17/92	ICB*QC*1	1008*CLP90	BARIUM	MG/KG-DRY	ND
06/17/92	ICB*QC*1	1013*CLP90	BERYLLIUM	MG/KG-DRY	ND
06/17/92	ICB*QC*1	917*CLP90	CALCIUM	MG/KG-DRY	ND
06/17/92	ICB*QC*1	1028*CLP90	CADMIUM	MG/KG-DRY	ND
06/17/92	ICB*QC*1	1038*CLP90	COBALT	MG/KG-DRY	ND
06/17/92	ICB*QC*1	1029*CLP90	CHROMIUM	MG/KG-DRY	ND
06/17/92	ICB*QC*1	1043*CLP90	COPPER	MG/KG-DRY	ND
06/17/92	ICB*QC*1	1170*CLP90	IRON	MG/KG-DRY	0.001
06/17/92	ICB*QC*1	938*CLP90	POTASSIUM	MG/KG-DRY	0.213
06/17/92	ICB*QC*1	924*CLP90	MAGNESIUM	MG/KG-DRY	0.005
06/17/92	ICB*QC*1	1053*CLP90	MANGANESE	MG/KG-DRY	ND
06/17/92	ICB*QC*1	934*CLP90	SODIUM	MG/KG-DRY	ND
06/17/92	ICB*QC*1	1068*CLP90	NICKEL	MG/KG-DRY	0.002
06/17/92	ICB*QC*1	1052*CLP90I	LEAD	MG/KG -DRY	ND
06/17/92	ICB*QC*1	1098*CLP90	ANTIMONY	MG/KG-DRY	0.002
06/17/92	ICB*QC*1	1088*CLP90	VANADIUM	MG/KG-DRY	ND
06/17/92	ICB*QC*1	1093*CLP90	ZINC	MG/KG-DRY	0.0003

Continuing Calibration Blank Sample Summary

DATE	SAMPLE	STORET	PARAMETER	UNITS	FOUND
06/17/92	CCB*QC*1	1078*CLP90	SILVER	MG/KG-DRY	0.001
06/17/92	CCB*QC*1	1108*CLP90	ALUMINUM	MG/KG-DRY	0.011
06/17/92	CCB*QC*1	1008*CLP90	BARIUM	MG/KG-DRY	ND
06/17/92	CCB*QC*1	1013*CLP90	BERYLLIUM	MG/KG-DRY	ND
06/17/92	CCB*QC*1	917*CLP90	CALCIUM	MG/KG-DRY	0.005
06/17/92	CCB*QC*1	1028*CLP90	CADMIUM	MG/KG-DRY	ND
06/17/92	CCB*QC*1	1038*CLP90	COBALT	MG/KG-DRY	0.002
06/17/92	CCB*QC*1	1029*CLP90	CHROMIUM	MG/KG-DRY	0.002
06/17/92	CCB*QC*1	1043*CLP90	COPPER	MG/KG-DRY	0.002
06/17/92	CCB*QC*1	1170*CLP90	IRON	MG/KG-DRY	0.004
06/17/92	CCB*QC*1	938*CLP90	POTASSIUM	MG/KG-DRY	0.457
06/17/92	CCB*QC*1	924*CLP90	MAGNESIUM	MG/KG-DRY	0.020
06/17/92	CCB*QC*1	1053*CLP90	MANGANESE	MG/KG-DRY	0.0007
06/17/92	CCB*QC*1	934*CLP90	SODIUM	MG/KG-DRY	ND
06/17/92	CCB*QC*1	1068*CLP90	NICKEL	MG/KG-DRY	0.003
06/17/92	CCB*QC*1	1052*CLP90I	LEAD	MG/KG -DRY	ND
06/17/92	CCB*QC*1	1098*CLP90	ANTIMONY	MG/KG-DRY	0.005
06/17/92	CCB*QC*1	1088*CLP90	VANADIUM	MG/KG-DRY	0.0008
06/17/92	CCB*QC*1	1093*CLP90	ZINC	MG/KG-DRY	0.002
06/17/92	CCB*QC*2	1078*CLP90	SILVER	MG/KG-DRY	0.002
06/17/92	CCB*QC*2	1108*CLP90	ALUMINUM	MG/KG-DRY	0.013
06/17/92	CCB*QC*2	1008*CLP90	BARIUM	MG/KG-DRY	ND
06/17/92	CCB*QC*2	1013*CLP90	BERYLLIUM	MG/KG-DRY	ND
06/17/92	CCB*QC*2	917*CLP90	CALCIUM	MG/KG-DRY	0.001
06/17/92	CCB*QC*2	1028*CLP90	CADMIUM	MG/KG-DRY	ND
06/17/92	CCB*QC*2	1038*CLP90	COBALT	MG/KG-DRY	0.002
06/17/92	CCB*QC*2	1029*CLP90	CHROMIUM	MG/KG-DRY	0.001
06/17/92	CCB*QC*2	1043*CLP90	COPPER	MG/KG-DRY	0.001
06/17/92	CCB*QC*2	1170*CLP90	IRON	MG/KG-DRY	0.001
06/17/92	CCB*QC*2	938*CLP90	POTASSIUM	MG/KG-DRY	0.628
06/17/92	CCB*QC*2	924*CLP90	MAGNESIUM	MG/KG-DRY	0.029
06/17/92	CCB*QC*2	1053*CLP90	MANGANESE	MG/KG-DRY	0.0005
06/17/92	CCB*QC*2	934*CLP90	SODIUM	MG/KG-DRY	0.008
06/17/92	CCB*QC*2	1068*CLP90	NICKEL	MG/KG-DRY	0.006
06/17/92	CCB*QC*2	1052*CLP90I	LEAD	MG/KG -DRY	ND
06/17/92	CCB*QC*2	1098*CLP90	ANTIMONY	MG/KG-DRY	0.01
06/17/92	CCB*QC*2	1088*CLP90	VANADIUM	MG/KG-DRY	0.002
06/17/92	CCB*QC*2	1093*CLP90	ZINC	MG/KG-DRY	0.0009
06/17/92	CCB*QC*3	1078*CLP90	SILVER	MG/KG-DRY	0.004
06/17/92	CCB*QC*3	1108*CLP90	ALUMINUM	MG/KG-DRY	0.014
06/17/92	CCB*QC*3	1008*CLP90	BARIUM	MG/KG-DRY	ND
06/17/92	CCB*QC*3	1013*CLP90	BERYLLIUM	MG/KG-DRY	ND
06/17/92	CCB*QC*3	917*CLP90	CALCIUM	MG/KG-DRY	ND
06/17/92	CCB*QC*3	1028*CLP90	CADMIUM	MG/KG-DRY	ND
06/17/92	CCB*QC*3	1038*CLP90	COBALT	MG/KG-DRY	0.0009
06/17/92	CCB*QC*3	1029*CLP90	CHROMIUM	MG/KG-DRY	0.001
06/17/92	CCB*QC*3	1043*CLP90	COPPER	MG/KG-DRY	0.0001
06/17/92	CCB*QC*3	1170*CLP90	IRON	MG/KG-DRY	0.001
06/17/92	CCB*QC*3	938*CLP90	POTASSIUM	MG/KG-DRY	ND
06/17/92	CCB*QC*3	924*CLP90	MAGNESIUM	MG/KG-DRY	0.033
06/17/92	CCB*QC*3	1053*CLP90	MANGANESE	MG/KG-DRY	0.0007
06/17/92	CCB*QC*3	934*CLP90	SODIUM	MG/KG-DRY	0.003
06/17/92	CCB*QC*3	1068*CLP90	NICKEL	MG/KG-DRY	0.0007
06/17/92	CCB*QC*3	1052*CLP90I	LEAD	MG/KG -DRY	ND

ESE BATCH : 028800

Continuing Calibration Blank Sample Summary

DATE	SAMPLE	STORET	PARAMETER	UNITS	FOUND
06/17/92	CCB*QC*3	1098*CLP90	ANTIMONY	MG/KG-DRY	0.02
06/17/92	CCB*QC*3	1088*CLP90	VANADIUM	MG/KG-DRY	0.003
06/17/92	CCB*QC*3	1093*CLP90	ZINC	MG/KG-DRY	0.0003

Initial Calibration Verification Sample Summary

DATE	SAMPLE	STORET	PARAMETER	UNITS	TARGET	FOUND	%RECV	RECV CRIT
06/17/92	ICV*ICAP19*1	1078*CLP90	SILVER	MG/KG-DRY		ND		90-110
06/17/92	ICV*ICAP19*1	1108*CLP90	ALUMINUM	MG/KG-DRY		ND		90-110
06/17/92	ICV*ICAP19*1	1008*CLP90	BARIUM	MG/KG-DRY		ND		90-110
06/17/92	ICV*ICAP19*1	1013*CLP90	BERYLLIUM	MG/KG-DRY	1.00	1.01	101	90-110
06/17/92	ICV*ICAP19*1	917*CLP90	CALCIUM	MG/KG-DRY	1.00	1.05	105	90-110
06/17/92	ICV*ICAP19*1	1028*CLP90	CADMIUM	MG/KG-DRY	1.00	1.00	100.0	90-110
06/17/92	ICV*ICAP19*1	1038*CLP90	COBALT	MG/KG-DRY	1.00	1.01	101	90-110
06/17/92	ICV*ICAP19*1	1029*CLP90	CHROMIUM	MG/KG-DRY	1.00	1.01	101	90-110
06/17/92	ICV*ICAP19*1	1043*CLP90	COPPER	MG/KG-DRY	1.00	1.01	101	90-110
06/17/92	ICV*ICAP19*1	1170*CLP90	IRON	MG/KG-DRY	1.00	1.03	103	90-110
06/17/92	ICV*ICAP19*1	938*CLP90	POTASSIUM	MG/KG-DRY		ND		90-110
06/17/92	ICV*ICAP19*1	924*CLP90	MAGNESIUM	MG/KG-DRY	1.00	1.05	105	90-110
06/17/92	ICV*ICAP19*1	1053*CLP90	MANGANESE	MG/KG-DRY	1.00	1.02	102	90-110
06/17/92	ICV*ICAP19*1	934*CLP90	SODIUM	MG/KG-DRY		ND		90-110
06/17/92	ICV*ICAP19*1	1068*CLP90	NICKEL	MG/KG-DRY	1.00	1.03	103	90-110
06/17/92	ICV*ICAP19*1	1052*CLP90I	LEAD	MG/KG -DRY	1.00	1.03	103	90-110
06/17/92	ICV*ICAP19*1	1098*CLP90	ANTIMONY	MG/KG-DRY	1.0	1.0	100	90-110
06/17/92	ICV*ICAP19*1	1088*CLP90	VANADIUM	MG/KG-DRY	1.00	1.01	101	90-110
06/17/92	ICV*ICAP19*1	1093*CLP90	ZINC	MG/KG-DRY	1.00	1.02	102	90-110
06/17/92	ICV*ICAP7*1	1078*CLP90	SILVER	MG/KG-DRY	1.00	1.00	100.0	90-110
06/17/92	ICV*ICAP7*1	1108*CLP90	ALUMINUM	MG/KG-DRY	1.00	1.01	101	90-110
06/17/92	ICV*ICAP7*1	1008*CLP90	BARIUM	MG/KG-DRY	1.00	1.01	101	90-110
06/17/92	ICV*ICAP7*1	1013*CLP90	BERYLLIUM	MG/KG-DRY		ND		90-110
06/17/92	ICV*ICAP7*1	917*CLP90	CALCIUM	MG/KG-DRY		ND		90-110
06/17/92	ICV*ICAP7*1	1028*CLP90	CADMIUM	MG/KG-DRY		ND		90-110
06/17/92	ICV*ICAP7*1	1038*CLP90	COBALT	MG/KG-DRY		ND		90-110
06/17/92	ICV*ICAP7*1	1029*CLP90	CHROMIUM	MG/KG-DRY		ND		90-110
06/17/92	ICV*ICAP7*1	1043*CLP90	COPPER	MG/KG-DRY		ND		90-110
06/17/92	ICV*ICAP7*1	1170*CLP90	IRON	MG/KG-DRY		ND		90-110
06/17/92	ICV*ICAP7*1	938*CLP90	POTASSIUM	MG/KG-DRY	10.00	10.2	102	90-110
06/17/92	ICV*ICAP7*1	924*CLP90	MAGNESIUM	MG/KG-DRY		ND		90-110
06/17/92	ICV*ICAP7*1	1053*CLP90	MANGANESE	MG/KG-DRY		ND		90-110
06/17/92	ICV*ICAP7*1	934*CLP90	SODIUM	MG/KG-DRY	1.00	1.02	102	90-110
06/17/92	ICV*ICAP7*1	1068*CLP90	NICKEL	MG/KG-DRY		ND		90-110
06/17/92	ICV*ICAP7*1	1052*CLP90I	LEAD	MG/KG -DRY		ND		90-110
06/17/92	ICV*ICAP7*1	1098*CLP90	ANTIMONY	MG/KG-DRY		ND		90-110
06/17/92	ICV*ICAP7*1	1088*CLP90	VANADIUM	MG/KG-DRY		ND		90-110
06/17/92	ICV*ICAP7*1	1093*CLP90	ZINC	MG/KG-DRY		ND		90-110

Continuing Calibration Verification Sample Summary

DATE	SAMPLE	STORET	PARAMETER	UNITS	TARGET	FOUND	%RECV	RECV CRIT
06/17/92	CCV*QC*1	1078*CLP90	SILVER	MG/KG-DRY	0.500	0.503	101	90-110
06/17/92	CCV*QC*1	1108*CLP90	ALUMINUM	MG/KG-DRY	5.00	5.06	101	90-110
06/17/92	CCV*QC*1	1008*CLP90	BARIUM	MG/KG-DRY	0.500	0.495	99.0	90-110
06/17/92	CCV*QC*1	1013*CLP90	BERYLLIUM	MG/KG-DRY	0.500	0.509	102	90-110
06/17/92	CCV*QC*1	917*CLP90	CALCIUM	MG/KG-DRY	5.00	5.08	102	90-110
06/17/92	CCV*QC*1	1028*CLP90	CADMIUM	MG/KG-DRY	0.500	0.497	99.4	90-110
06/17/92	CCV*QC*1	1038*CLP90	COBALT	MG/KG-DRY	0.500	0.498	99.6	90-110
06/17/92	CCV*QC*1	1029*CLP90	CHROMIUM	MG/KG-DRY	0.500	0.500	100.0	90-110
06/17/92	CCV*QC*1	1043*CLP90	COPPER	MG/KG-DRY	0.500	0.501	100	90-110
06/17/92	CCV*QC*1	1170*CLP90	IRON	MG/KG-DRY	5.00	5.05	101	90-110
06/17/92	CCV*QC*1	938*CLP90	POTASSIUM	MG/KG-DRY	5.00	5.32	106	90-110
06/17/92	CCV*QC*1	924*CLP90	MAGNESIUM	MG/KG-DRY	5.00	5.08	102	90-110
06/17/92	CCV*QC*1	1053*CLP90	MANGANESE	MG/KG-DRY	0.500	0.500	100.0	90-110
06/17/92	CCV*QC*1	934*CLP90	SODIUM	MG/KG-DRY	5.00	4.88	97.6	90-110
06/17/92	CCV*QC*1	1068*CLP90	NICKEL	MG/KG-DRY	0.500	0.504	101	90-110
06/17/92	CCV*QC*1	1052*CLP90I	LEAD	MG/KG -DRY	0.500	0.509	102	90-110
06/17/92	CCV*QC*1	1098*CLP90	ANTIMONY	MG/KG-DRY	0.5	0.5	100	90-110
06/17/92	CCV*QC*1	1088*CLP90	VANADIUM	MG/KG-DRY	0.500	0.502	100	90-110
06/17/92	CCV*QC*1	1093*CLP90	ZINC	MG/KG-DRY	0.500	0.492	98.4	90-110
06/17/92	CCV*QC*2	1078*CLP90	SILVER	MG/KG-DRY	0.500	0.507	101	90-110
06/17/92	CCV*QC*2	1108*CLP90	ALUMINUM	MG/KG-DRY	5.00	5.15	103	90-110
06/17/92	CCV*QC*2	1008*CLP90	BARIUM	MG/KG-DRY	0.500	0.510	102	90-110
06/17/92	CCV*QC*2	1013*CLP90	BERYLLIUM	MG/KG-DRY	0.500	0.519	104	90-110
06/17/92	CCV*QC*2	917*CLP90	CALCIUM	MG/KG-DRY	5.00	5.21	104	90-110
06/17/92	CCV*QC*2	1028*CLP90	CADMIUM	MG/KG-DRY	0.500	0.506	101	90-110
06/17/92	CCV*QC*2	1038*CLP90	COBALT	MG/KG-DRY	0.500	0.507	101	90-110
06/17/92	CCV*QC*2	1029*CLP90	CHROMIUM	MG/KG-DRY	0.500	0.509	102	90-110
06/17/92	CCV*QC*2	1043*CLP90	COPPER	MG/KG-DRY	0.500	0.511	102	90-110

ESE BATCH : 020800

Continuing Calibration Verification Sample Summary

DATE	SAMPLE	STORET	PARAMETER	UNITS	TARGET	FOUND	%RECV	RECV CRIT
06/17/92	CCV*QC*2	1170*CLP90	IRON	MG/KG-DRY	5.00	5.14	103	90-110
06/17/92	CCV*QC*2	938*CLP90	POTASSIUM	MG/KG-DRY	5.00	5.32	106	90-110
06/17/92	CCV*QC*2	924*CLP90	MAGNESIUM	MG/KG-DRY	5.00	5.18	104	90-110
06/17/92	CCV*QC*2	1053*CLP90	MANGANESE	MG/KG-DRY	0.500	0.509	102	90-110
06/17/92	CCV*QC*2	934*CLP90	SODIUM	MG/KG-DRY	5.00	5.11	102	90-110
06/17/92	CCV*QC*2	1068*CLP90	NICKEL	MG/KG-DRY	0.500	0.514	103	90-110
06/17/92	CCV*QC*2	1052*CLP90I	LEAD	MG/KG -DRY	0.500	0.524	105	90-110
06/17/92	CCV*QC*2	1098*CLP90	ANTIMONY	MG/KG-DRY	0.5	0.5	100	90-110
06/17/92	CCV*QC*2	1088*CLP90	VANADIUM	MG/KG-DRY	0.500	0.513	103	90-110
06/17/92	CCV*QC*2	1093*CLP90	ZINC	MG/KG-DRY	0.500	0.504	101	90-110
06/17/92	CCV*QC*3	1078*CLP90	SILVER	MG/KG-DRY	0.500	0.503	101	90-110
06/17/92	CCV*QC*3	1108*CLP90	ALUMINUM	MG/KG-DRY	5.00	5.07	101	90-110
06/17/92	CCV*QC*3	1008*CLP90	BARIUM	MG/KG-DRY	0.500	0.503	101	90-110
06/17/92	CCV*QC*3	1013*CLP90	BERYLLIUM	MG/KG-DRY	0.500	0.512	102	90-110
06/17/92	CCV*QC*3	917*CLP90	CALCIUM	MG/KG-DRY	5.00	5.12	102	90-110
06/17/92	CCV*QC*3	1028*CLP90	CADMIUM	MG/KG-DRY	0.500	0.500	100.0	90-110
06/17/92	CCV*QC*3	1038*CLP90	COBALT	MG/KG-DRY	0.500	0.499	99.8	90-110
06/17/92	CCV*QC*3	1029*CLP90	CHROMIUM	MG/KG-DRY	0.500	0.497	99.4	90-110
06/17/92	CCV*QC*3	1043*CLP90	COPPER	MG/KG-DRY	0.500	0.502	100	90-110
06/17/92	CCV*QC*3	1170*CLP90	IRON	MG/KG-DRY	5.00	5.02	100	90-110
06/17/92	CCV*QC*3	938*CLP90	POTASSIUM	MG/KG-DRY	5.00	5.33	107	90-110
06/17/92	CCV*QC*3	924*CLP90	MAGNESIUM	MG/KG-DRY	5.00	5.09	102	90-110
06/17/92	CCV*QC*3	1053*CLP90	MANGANESE	MG/KG-DRY	0.500	0.501	100	90-110
06/17/92	CCV*QC*3	934*CLP90	SODIUM	MG/KG-DRY	5.00	5.06	101	90-110
06/17/92	CCV*QC*3	1068*CLP90	NICKEL	MG/KG-DRY	0.500	0.496	99.2	90-110
06/17/92	CCV*QC*3	1052*CLP90I	LEAD	MG/KG -DRY	0.500	0.505	101	90-110
06/17/92	CCV*QC*3	1098*CLP90	ANTIMONY	MG/KG-DRY	0.5	0.5	100	90-110
06/17/92	CCV*QC*3	1088*CLP90	VANADIUM	MG/KG-DRY	0.500	0.504	101	90-110
06/17/92	CCV*QC*3	1093*CLP90	ZINC	MG/KG-DRY	0.500	0.497	99.4	90-110
06/17/92	CCV*QC*4	1078*CLP90	SILVER	MG/KG-DRY	0.500	0.515	103	90-110
06/17/92	CCV*QC*4	1108*CLP90	ALUMINUM	MG/KG-DRY	5.00	5.13	103	90-110
06/17/92	CCV*QC*4	1008*CLP90	BARIUM	MG/KG-DRY	0.500	0.501	100	90-110
06/17/92	CCV*QC*4	1013*CLP90	BERYLLIUM	MG/KG-DRY	0.500	0.523	105	90-110
06/17/92	CCV*QC*4	917*CLP90	CALCIUM	MG/KG-DRY	5.00	5.21	104	90-110
06/17/92	CCV*QC*4	1028*CLP90	CADMIUM	MG/KG-DRY	0.500	0.511	102	90-110
06/17/92	CCV*QC*4	1038*CLP90	COBALT	MG/KG-DRY	0.500	0.503	101	90-110
06/17/92	CCV*QC*4	1029*CLP90	CHROMIUM	MG/KG-DRY	0.500	0.503	101	90-110
06/17/92	CCV*QC*4	1043*CLP90	COPPER	MG/KG-DRY	0.500	0.503	101	90-110
06/17/92	CCV*QC*4	1170*CLP90	IRON	MG/KG-DRY	5.00	5.07	101	90-110
06/17/92	CCV*QC*4	938*CLP90	POTASSIUM	MG/KG-DRY	5.00	5.19	104	90-110
06/17/92	CCV*QC*4	924*CLP90	MAGNESIUM	MG/KG-DRY	5.00	5.18	104	90-110
06/17/92	CCV*QC*4	1053*CLP90	MANGANESE	MG/KG-DRY	0.500	0.508	102	90-110
06/17/92	CCV*QC*4	934*CLP90	SODIUM	MG/KG-DRY	5.00	5.10	102	90-110
06/17/92	CCV*QC*4	1068*CLP90	NICKEL	MG/KG-DRY	0.500	0.515	103	90-110
06/17/92	CCV*QC*4	1052*CLP90I	LEAD	MG/KG -DRY	0.500	0.517	103	90-110
06/17/92	CCV*QC*4	1098*CLP90	ANTIMONY	MG/KG-DRY	0.5	0.5	100	90-110
06/17/92	CCV*QC*4	1088*CLP90	VANADIUM	MG/KG-DRY	0.500	0.511	102	90-110
06/17/92	CCV*QC*4	1093*CLP90	ZINC	MG/KG-DRY	0.500	0.508	102	90-110

Method Blank Sample Summary

DATE	SAMPLE	STORET	PARAMETER	UNITS	FOUND
06/17/92	MB*QC*1	1078*CLP90	SILVER	MG/KG-DRY	ND
06/17/92	MB*QC*1	1108*CLP90	ALUMINUM	MG/KG-DRY	ND
06/17/92	MB*QC*1	1008*CLP90	BARIUM	MG/KG-DRY	0.005
06/17/92	MB*QC*1	1013*CLP90	BERYLLIUM	MG/KG-DRY	ND
06/17/92	MB*QC*1	917*CLP90	CALCIUM	MG/KG-DRY	0.042
06/17/92	MB*QC*1	1028*CLP90	CADMIUM	MG/KG-DRY	ND
06/17/92	MB*QC*1	1038*CLP90	COBALT	MG/KG-DRY	ND
06/17/92	MB*QC*1	1029*CLP90	CHROMIUM	MG/KG-DRY	ND
06/17/92	MB*QC*1	1043*CLP90	COPPER	MG/KG-DRY	ND
06/17/92	MB*QC*1	1170*CLP90	IRON	MG/KG-DRY	ND
06/17/92	MB*QC*1	938*CLP90	POTASSIUM	MG/KG-DRY	ND
06/17/92	MB*QC*1	924*CLP90	MAGNESIUM	MG/KG-DRY	ND
06/17/92	MB*QC*1	1053*CLP90	MANGANESE	MG/KG-DRY	ND
06/17/92	MB*QC*1	934*CLP90	SODIUM	MG/KG-DRY	0.148
06/17/92	MB*QC*1	1068*CLP90	NICKEL	MG/KG-DRY	ND
06/17/92	MB*QC*1	1052*CLP90I	LEAD	MG/KG -DRY	ND
06/17/92	MB*QC*1	1098*CLP90	ANTIMONY	MG/KG-DRY	ND
06/17/92	MB*QC*1	1088*CLP90	VANADIUM	MG/KG-DRY	ND
06/17/92	MB*QC*1	1093*CLP90	ZINC	MG/KG-DRY	0.005

Laboratory Control Sample Summary

DATE	SAMPLE	STORET	PARAMETER	%RECV	RECV CRIT	UNITS	TARGET	FOUND
06/17/92	LCS*QC*1	1078*CLP90	SILVER	90.8	80-120	MG/KG-DRY	25.0	22.7
06/17/92	LCS*QC*1	1108*CLP90	ALUMINUM	72.1	80-120	MG/KG-DRY	9510	6860

Laboratory Control Sample Summary

DATE	SAMPLE	STORET	PARAMETER	%RECV	RECV CRIT	UNITS	TARGET	FOUND
06/17/92	LCS*QC*1	1008*CLP90	BARIUM	95.9	80-120	MG/KG-DRY	92.0	88.2
06/17/92	LCS*QC*1	1013*CLP90	BERYLLIUM	93.6	80-120	MG/KG-DRY	25.0	23.4
06/17/92	LCS*QC*1	917*CLP90	CALCIUM	82.4	80-120	MG/KG-DRY	7430	6120
06/17/92	LCS*QC*1	1028*CLP90	CADMIUM	90.5	80-120	MG/KG-DRY	116	105
06/17/92	LCS*QC*1	1038*CLP90	COBALT	87.2	80-120	MG/KG-DRY	81.0	70.6
06/17/92	LCS*QC*1	1029*CLP90	CHROMIUM	87.7	80-120	MG/KG-DRY	87.0	76.3
06/17/92	LCS*QC*1	1043*CLP90	COPPER	76.2	80-120	MG/KG-DRY	93.0	70.9
06/17/92	LCS*QC*1	1170*CLP90	IRON	91.5	80-120	MG/KG-DRY	13000	11900
06/17/92	LCS*QC*1	938*CLP90	POTASSIUM	75.3	80-120	MG/KG-DRY	3560	2680
06/17/92	LCS*QC*1	924*CLP90	MAGNESIUM	85.4	80-120	MG/KG-DRY	3500	2990
06/17/92	LCS*QC*1	1053*CLP90	MANGANESE	88.2	80-120	MG/KG-DRY	466	411
06/17/92	LCS*QC*1	934*CLP90	SODIUM	109.0	80-120	MG/KG-DRY	420	458
06/17/92	LCS*QC*1	1068*CLP90	NICKEL	94.4	80-120	MG/KG-DRY	108	102
06/17/92	LCS*QC*1	1052*CLP90I	LEAD	97.1	80-120	MG/KG -DRY	138	134
06/17/92	LCS*QC*1	1098*CLP90	ANTIMONY	58	80-120	MG/KG-DRY	57	33
06/17/92	LCS*QC*1	1088*CLP90	VANADIUM	82.9	80-120	MG/KG-DRY	97.0	80.4
06/17/92	LCS*QC*1	1093*CLP90	ZINC	92.0	80-120	MG/KG-DRY	374	344

Sample Matrix Spike Recovery Summary

DATE	SAMPLE	STORET	PARAMETER	%RECV	RECV CRIT	UNSPIKED	UNITS	TARGET	FOUND	RPD
06/17/92	SPM*ALS2B*1	1078*CLP90	SILVER	-123	75-125	56.5	MG/KG-DRY	10.1	-12.4	
06/17/92	SPM*ALS2B*1	1108*CLP90	ALUMINUM	-141	75-125	5750	MG/KG-DRY	403	-570	
06/17/92	SPM*ALS2B*1	1008*CLP90	BARIUM	91.3	75-125	81.4	MG/KG-DRY	403	368	
06/17/92	SPM*ALS2B*1	1013*CLP90	BERYLLIUM	95.4	75-125	0.0	MG/KG-DRY	10.1	9.64	
06/17/92	SPM*ALS2B*1	917*CLP90	CALCIUM	-124	80-120	14300	MG/KG-DRY	2020	-2500	
06/17/92	SPM*ALS2B*1	1028*CLP90	CADMIUM	-30.7	75-125	38.4	MG/KG-DRY	10.1	-3.10	
06/17/92	SPM*ALS2B*1	1038*CLP90	COBALT	78.7	75-125	67.5	MG/KG-DRY	101	79.5	
06/17/92	SPM*ALS2B*1	1029*CLP90	CHROMIUM	-16100	75-125	28500	MG/KG-DRY	40.3	-6500	
06/17/92	SPM*ALS2B*1	1043*CLP90	COPPER	-79.4	75-125	438	MG/KG-DRY	50.4	-40.0	
06/17/92	SPM*ALS2B*1	1170*CLP90	IRON	-668	80-120	7390	MG/KG-DRY	202	-1350	
06/17/92	SPM*ALS2B*1	938*CLP90	POTASSIUM	83.7	80-120	697	MG/KG-DRY	2020	1690	
06/17/92	SPM*ALS2B*1	924*CLP90	MAGNESIUM	62.4	80-120	2720	MG/KG-DRY	2020	1260	
06/17/92	SPM*ALS2B*1	1053*CLP90	MANGANESE	47.5	75-125	176	MG/KG-DRY	101	48.0	
06/17/92	SPM*ALS2B*1	934*CLP90	SODIUM	45.0	80-120	4670	MG/KG-DRY	2020	910	
06/17/92	SPM*ALS2B*1	1068*CLP90	NICKEL	81.2	75-125	867	MG/KG-DRY	101	82.0	
06/17/92	SPM*ALS2B*1	1052*CLP90I	LEAD	-47400	75-125	130000	MG/KG -DRY	101	-47900	
06/17/92	SPM*ALS2B*1	1098*CLP90	ANTIMONY	-400	75-125	3200	MG/KG-DRY	100	-400	
06/17/92	SPM*ALS2B*1	1088*CLP90	VANADIUM	91.2	75-125	17.9	MG/KG-DRY	101	92.1	
06/17/92	SPM*ALS2B*1	1093*CLP90	ZINC	33.7	75-125	198	MG/KG-DRY	101	34.0	

licate Analysis Sample Summary

DATE	SAMPLE	STORET	PARAMETER	UNITS	REP #1	REP #2	RPD	RPD CRIT
06/17/92	RP*ALS2B*1	1078*CLP90	SILVER	MG/KG-DRY	56.5	39.3	35.9	20
06/17/92	RP*ALS2B*1	1108*CLP90	ALUMINUM	MG/KG-DRY	5750	5090	12.2	20
06/17/92	RP*ALS2B*1	1008*CLP90	BARIUM	MG/KG-DRY	81.4	74.3	9.12	20
06/17/92	RP*ALS2B*1	1013*CLP90	BERYLLIUM	MG/KG-DRY	<0.501	<0.504	0.597	20
06/17/92	RP*ALS2B*1	917*CLP90	CALCIUM	MG/KG-DRY	14300	12900	10.3	20
06/17/92	RP*ALS2B*1	1028*CLP90	CADMIUM	MG/KG-DRY	38.4	34.1	11.9	20
06/17/92	RP*ALS2B*1	1038*CLP90	COBALT	MG/KG-DRY	67.5	68.2	1.03	20
06/17/92	RP*ALS2B*1	1029*CLP90	CHROMIUM	MG/KG-DRY	28500	27000	5.41	20
06/17/92	RP*ALS2B*1	1043*CLP90	COPPER	MG/KG-DRY	438	415	5.39	20
06/17/92	RP*ALS2B*1	1170*CLP90	IRON	MG/KG-DRY	7390	6420	14.0	20
06/17/92	RP*ALS2B*1	938*CLP90	POTASSIUM	MG/KG-DRY	697	651	6.82	20
06/17/92	RP*ALS2B*1	924*CLP90	MAGNESIUM	MG/KG-DRY	2720	2410	12.1	20
06/17/92	RP*ALS2B*1	1053*CLP90	MANGANESE	MG/KG-DRY	176	155	12.7	20
06/17/92	RP*ALS2B*1	934*CLP90	SODIUM	MG/KG-DRY	4670	4190	10.8	20
06/17/92	RP*ALS2B*1	1068*CLP90	NICKEL	MG/KG-DRY	867	924	6.37	20
06/17/92	RP*ALS2B*1	1052*CLP90I	LEAD	MG/KG -DRY	130000	86200	40.5	20
06/17/92	RP*ALS2B*1	1098*CLP90	ANTIMONY	MG/KG-DRY	3200	2900	9.8	20
06/17/92	RP*ALS2B*1	1088*CLP90	VANADIUM	MG/KG-DRY	17.9	16.9	5.75	20
06/17/92	RP*ALS2B*1	1093*CLP90	ZINC	MG/KG-DRY	198	159	21.8	20

Serial Dilution Sample Summary

DATE	SAMPLE	STORET	PARAMETER	UNITS	REP #1	REP #2	RPD	RPD CRIT
06/17/92	SD*ALS2B*1	1078*CLP90	SILVER	MG/KG-DRY	56.5	56.5	0.0	10
06/17/92	SD*ALS2B*1	1108*CLP90	ALUMINUM	MG/KG-DRY	5750	5770	0.347	10
06/17/92	SD*ALS2B*1	1008*CLP90	BARIUM	MG/KG-DRY	81.4	82.8	1.71	10
06/17/92	SD*ALS2B*1	1013*CLP90	BERYLLIUM	MG/KG-DRY	0.0	ND	NC	10
06/17/92	SD*ALS2B*1	917*CLP90	CALCIUM	MG/KG-DRY	14300	14600	2.08	10
06/17/92	SD*ALS2B*1	1028*CLP90	CADMIUM	MG/KG-DRY	38.4	39.0	1.55	10
06/17/92	SD*ALS2B*1	1038*CLP90	COBALT	MG/KG-DRY	67.5	70.4	4.21	10
06/17/92	SD*ALS2B*1	1029*CLP90	CHROMIUM	MG/KG-DRY	28500	27800	2.49	10
06/17/92	SD*ALS2B*1	1043*CLP90	COPPER	MG/KG-DRY	438	447	2.03	10
06/17/92	SD*ALS2B*1	1170*CLP90	IRON	MG/KG-DRY	7390	7700	4.11	10

ESE BATCH : 028000

Serial Dilution Sample Summary

DATE	SAMPLE	STORET	PARAMETER	UNITS	REP #1	REP #2	RPD	RPD CRIT
06/17/92	SD*ALS2B*1	938*CLP90	POTASSIUM	MG/KG-DRY	697	629	10.3	10
06/17/92	SD*ALS2B*1	924*CLP90	MAGNESIUM	MG/KG-DRY	2720	2750	1.10	10
06/17/92	SD*ALS2B*1	1053*CLP90	MANGANESE	MG/KG-DRY	176	181	2.80	10
06/17/92	SD*ALS2B*1	934*CLP90	SODIUM	MG/KG-DRY	4670	4670	0.0	10
06/17/92	SD*ALS2B*1	1068*CLP90	NICKEL	MG/KG-DRY	867	917	5.61	10
06/17/92	SD*ALS2B*1	1052*CLP90I	LEAD	MG/KG -DRY	130000	125000	3.92	10
06/17/92	SD*ALS2B*1	1098*CLP90	ANTIMONY	MG/KG-DRY	3200	3300	3.1	10
06/17/92	SD*ALS2B*1	1088*CLP90	VANADIUM	MG/KG-DRY	17.9	18.0	0.557	10
06/17/92	SD*ALS2B*1	1093*CLP90	ZINC	MG/KG-DRY	198	203	2.49	10

Spike Into Matrix Recovery Summary

DATE	SAMPLE	STORET	PARAMETER	%RECV	RECV CRIT	UNITS	TARGET	FOUND
06/17/92	SPX*ALS2B*1	1078*CLP90	SILVER	98.5	85-115	MG/KG-DRY	100	98.5
06/17/92	SPX*ALS2B*1	1108*CLP90	ALUMINUM	111.0	85-115	MG/KG-DRY	1000	1110
06/17/92	SPX*ALS2B*1	1008*CLP90	BARIUM	101.0	85-115	MG/KG-DRY	100	101
06/17/92	SPX*ALS2B*1	1013*CLP90	BERYLLIUM	101.0	85-115	MG/KG-DRY	100	101
06/17/92	SPX*ALS2B*1	917*CLP90	CALCIUM	144.0	85-115	MG/KG-DRY	1000	1440
06/17/92	SPX*ALS2B*1	1028*CLP90	CADMIUM	96.6	85-115	MG/KG-DRY	100	96.6
06/17/92	SPX*ALS2B*1	1038*CLP90	COBALT	98.5	85-115	MG/KG-DRY	100	98.5
06/17/92	SPX*ALS2B*1	1029*CLP90	CHROMIUM	1160	85-115	MG/KG-DRY	100	1160
06/17/92	SPX*ALS2B*1	1043*CLP90	COPPER	108.0	85-115	MG/KG-DRY	100	108
06/17/92	SPX*ALS2B*1	1170*CLP90	IRON	124.0	85-115	MG/KG-DRY	1000	1240
06/17/92	SPX*ALS2B*1	938*CLP90	POTASSIUM	102.0	85-115	MG/KG-DRY	1000	1020
06/17/92	SPX*ALS2B*1	924*CLP90	MAGNESIUM	108.0	85-115	MG/KG-DRY	1000	1080
06/17/92	SPX*ALS2B*1	1053*CLP90	MANGANESE	104.0	85-115	MG/KG-DRY	100	104
06/17/92	SPX*ALS2B*1	934*CLP90	SODIUM	107.0	85-115	MG/KG-DRY	1000	1070
06/17/92	SPX*ALS2B*1	1068*CLP90	NICKEL	132.0	85-115	MG/KG-DRY	100	132
06/17/92	SPX*ALS2B*1	1052*CLP90I	LEAD	5970	85-115	MG/KG -DRY	100	5970
06/17/92	SPX*ALS2B*1	1098*CLP90	ANTIMONY	210	85-115	MG/KG-DRY	100	210
06/17/92	SPX*ALS2B*1	1088*CLP90	VANADIUM	100.0	85-115	MG/KG-DRY	100	100.0
06/17/92	SPX*ALS2B*1	1093*CLP90	ZINC	104.0	85-115	MG/KG-DRY	100	104

LOC BATCH : G28800

Environmental Science and Engineering Analytical Services
Computer QC Checks

Batch No.: G28800 Analysis Date: 06/17/92 Analyst: JEFF MILLER

	Yes	"Exceptions" No	Comment / Corrective Action
Analysis holding time within criteria?	X		
act holding time within criteria?	X		
ICB present?	X		
ICB within acceptance criteria?	X		
CCB present?	X		
CCB within acceptance criteria?	X		
ICV present?	X		
ICV within acceptance criteria?	X		
CCV present?	X		
CCV within acceptance criteria?	X		
Method blank present?	X		
Method blank within acceptance criteria?	X		
LCS present?	X		
LCS within acceptance criteria?		X	1108*CLP90 1098*CLP90
Sample matrix spike present?	X		
Sample matrix spike within acceptance criteria?		X	1078*CLP90 1108*CLP90 1028*CLP90 1029*CLP90 1043*CLP90 1053*CLP90 1052*CLP90 1098*CLP90 1093*CLP90
ple replicate present?	X		
le replicate within acceptance criteria?		X	1078*CLP90 1052*CLP90 1093*CLP90
SD present?	X		
SD within acceptance criteria?	X		

Note: Any "NO" answer requires a comment.

OVERRIDE COMMENTS

PROB:LCS NOT WITHIN ACCEPTANCE
CRITERIA.
EXPL:% RECOVERY ARE WITHIN ADVISORY
RANGE.

PROB:SAMPLE REPLICATE NOT WITHIN
ACCEPTANCE CRITERIA.
EXPL:POSSIBLE LACK OF HOMOGENEITY.
JM/6/17/92

ESE BATCH : G29032
CLASSIFICATION : TAL METALS - CLP SOW 3/90

STATUS : FINAL

METHOD BLANK CORRECTION METHOD : NONE

FIELD GRP	PROJECT NUMBER	PROJECT NAME	LAB COORDINATOR
ALS2B	3914042 0201	JMM/ALAMEDA CTO-121	JACKIE HARGROVE-ELLI

SAMPLE CODE	CLIENT ID	DATE ANALYZED	TIME ANALYZED
ALS2B*51	B-05PS-03	06/23/92	05:49PM

Test Batch : 629032

Initial Calibration Verification Sample Summary

DATE	SAMPLE	STORET	PARAMETER	UNITS	TARGET	FOUND	%RECV	RECV CRIT
06/23/92	ICV*ICAP19*1	1098*CLP90	ANTIMONY	MG/KG-DRY	1.0	1.0	100	90-110
06/23/92	ICV*ICAP19*1	1088*CLP90	VANADIUM	MG/KG-DRY	1.00	0.997	99.7	90-110
06/23/92	ICV*ICAP19*1	1093*CLP90	ZINC	MG/KG-DRY	1.00	1.00	100.0	90-110
06/23/92	ICV*ICAP7*1	1078*CLP90	SILVER	MG/KG-DRY	1.00	1.01	101	90-110
'23/92	ICV*ICAP7*1	1108*CLP90	ALUMINUM	MG/KG-DRY	1.00	1.01	101	90-110
:3/92	ICV*ICAP7*1	1008*CLP90	BARIUM	MG/KG-DRY	1.00	1.00	100.0	90-110
/23/92	ICV*ICAP7*1	1013*CLP90	BERYLLIUM	MG/KG-DRY		ND		90-110
06/23/92	ICV*ICAP7*1	917*CLP90	CALCIUM	MG/KG-DRY		ND		90-110
06/23/92	ICV*ICAP7*1	1028*CLP90	CADMIUM	MG/KG-DRY		ND		90-110
06/23/92	ICV*ICAP7*1	1038*CLP90	COBALT	MG/KG-DRY		ND		90-110
06/23/92	ICV*ICAP7*1	1029*CLP90	CHROMIUM	MG/KG-DRY		ND		90-110
06/23/92	ICV*ICAP7*1	1043*CLP90	COPPER	MG/KG-DRY		ND		90-110
06/23/92	ICV*ICAP7*1	1170*CLP90	IRON	MG/KG-DRY		ND		90-110
06/23/92	ICV*ICAP7*1	938*CLP90	POTASSIUM	MG/KG-DRY	10.00	10.1	101	90-110
06/23/92	ICV*ICAP7*1	924*CLP90	MAGNESIUM	MG/KG-DRY		ND		90-110
06/23/92	ICV*ICAP7*1	1053*CLP90	MANGANESE	MG/KG-DRY		ND		90-110
06/23/92	ICV*ICAP7*1	934*CLP90	SODIUM	MG/KG-DRY	1.00	1.02	102	90-110
06/23/92	ICV*ICAP7*1	1068*CLP90	NICKEL	MG/KG-DRY		ND		90-110
06/23/92	ICV*ICAP7*1	1098*CLP90	ANTIMONY	MG/KG-DRY		ND		90-110
06/23/92	ICV*ICAP7*1	1088*CLP90	VANADIUM	MG/KG-DRY		ND		90-110
06/23/92	ICV*ICAP7*1	1093*CLP90	ZINC	MG/KG-DRY		ND		90-110
06/23/92	ICV*ICAP19*2	1078*CLP90	SILVER	MG/KG-DRY		ND		90-110
06/23/92	ICV*ICAP19*2	1108*CLP90	ALUMINUM	MG/KG-DRY		ND		90-110
06/23/92	ICV*ICAP19*2	1008*CLP90	BARIUM	MG/KG-DRY		ND		90-110
06/23/92	ICV*ICAP19*2	1013*CLP90	BERYLLIUM	MG/KG-DRY	1.00	1.01	101	90-110
06/23/92	ICV*ICAP19*2	917*CLP90	CALCIUM	MG/KG-DRY	1.00	1.07	107	90-110
06/23/92	ICV*ICAP19*2	1028*CLP90	CADMIUM	MG/KG-DRY	1.00	0.999	99.9	90-110
06/23/92	ICV*ICAP19*2	1038*CLP90	COBALT	MG/KG-DRY	1.00	1.01	101	90-110
06/23/92	ICV*ICAP19*2	1029*CLP90	CHROMIUM	MG/KG-DRY	1.00	1.02	102	90-110
06/23/92	ICV*ICAP19*2	1043*CLP90	COPPER	MG/KG-DRY	1.00	1.01	101	90-110
06/23/92	ICV*ICAP19*2	1170*CLP90	IRON	MG/KG-DRY	1.00	1.04	104	90-110
06/23/92	ICV*ICAP19*2	938*CLP90	POTASSIUM	MG/KG-DRY		ND		90-110
06/23/92	ICV*ICAP19*2	924*CLP90	MAGNESIUM	MG/KG-DRY	1.00	1.05	105	90-110
06/23/92	ICV*ICAP19*2	1053*CLP90	MANGANESE	MG/KG-DRY	1.00	1.03	103	90-110
06/23/92	ICV*ICAP19*2	934*CLP90	SODIUM	MG/KG-DRY		ND		90-110
06/23/92	ICV*ICAP19*2	1068*CLP90	NICKEL	MG/KG-DRY	1.00	1.03	103	90-110
06/23/92	ICV*ICAP19*2	1098*CLP90	ANTIMONY	MG/KG-DRY	1.0	1.0	100	90-110
06/23/92	ICV*ICAP19*2	1088*CLP90	VANADIUM	MG/KG-DRY	1.00	1.02	102	90-110
06/23/92	ICV*ICAP19*2	1093*CLP90	ZINC	MG/KG-DRY	1.00	1.02	102	90-110
'23/92	ICV*ICAP7*2	1078*CLP90	SILVER	MG/KG-DRY	1.00	1.00	100.0	90-110
3/92	ICV*ICAP7*2	1108*CLP90	ALUMINUM	MG/KG-DRY	1.00	1.01	101	90-110
3/92	ICV*ICAP7*2	1008*CLP90	BARIUM	MG/KG-DRY	1.00	1.00	100.0	90-110
06/23/92	ICV*ICAP7*2	1013*CLP90	BERYLLIUM	MG/KG-DRY		ND		90-110
06/23/92	ICV*ICAP7*2	917*CLP90	CALCIUM	MG/KG-DRY		ND		90-110
06/23/92	ICV*ICAP7*2	1028*CLP90	CADMIUM	MG/KG-DRY		ND		90-110
06/23/92	ICV*ICAP7*2	1038*CLP90	COBALT	MG/KG-DRY		ND		90-110
06/23/92	ICV*ICAP7*2	1029*CLP90	CHROMIUM	MG/KG-DRY		ND		90-110
06/23/92	ICV*ICAP7*2	1043*CLP90	COPPER	MG/KG-DRY		ND		90-110
06/23/92	ICV*ICAP7*2	1170*CLP90	IRON	MG/KG-DRY		ND		90-110
06/23/92	ICV*ICAP7*2	938*CLP90	POTASSIUM	MG/KG-DRY	10.00	10.2	102	90-110
06/23/92	ICV*ICAP7*2	924*CLP90	MAGNESIUM	MG/KG-DRY		ND		90-110
06/23/92	ICV*ICAP7*2	1053*CLP90	MANGANESE	MG/KG-DRY		ND		90-110
06/23/92	ICV*ICAP7*2	934*CLP90	SODIUM	MG/KG-DRY	1.00	1.02	102	90-110
06/23/92	ICV*ICAP7*2	1068*CLP90	NICKEL	MG/KG-DRY		ND		90-110
06/23/92	ICV*ICAP7*2	1098*CLP90	ANTIMONY	MG/KG-DRY		ND		90-110
06/23/92	ICV*ICAP7*2	1088*CLP90	VANADIUM	MG/KG-DRY		ND		90-110
06/23/92	ICV*ICAP7*2	1093*CLP90	ZINC	MG/KG-DRY		ND		90-110

Continuing Calibration Verification Sample Summary

DATE	SAMPLE	STORET	PARAMETER	UNITS	TARGET	FOUND	%RECV	RECV CRIT
06/23/92	CCV*QC*1	1078*CLP90	SILVER	MG/KG-DRY	0.500	0.511	102	90-110
06/23/92	CCV*QC*1	1108*CLP90	ALUMINUM	MG/KG-DRY	5.00	5.17	103	90-110
06/23/92	CCV*QC*1	1008*CLP90	BARIUM	MG/KG-DRY	0.500	0.509	102	90-110
06/23/92	CCV*QC*1	1013*CLP90	BERYLLIUM	MG/KG-DRY	0.500	0.518	104	90-110
06/23/92	CCV*QC*1	917*CLP90	CALCIUM	MG/KG-DRY	5.00	5.22	104	90-110
06/23/92	CCV*QC*1	1028*CLP90	CADMIUM	MG/KG-DRY	0.500	0.500	100.0	90-110
06/23/92	CCV*QC*1	1038*CLP90	COBALT	MG/KG-DRY	0.500	0.502	100	90-110
06/23/92	CCV*QC*1	1029*CLP90	CHROMIUM	MG/KG-DRY	0.500	0.505	101	90-110
06/23/92	CCV*QC*1	1043*CLP90	COPPER	MG/KG-DRY	0.500	0.508	102	90-110
06/23/92	CCV*QC*1	1170*CLP90	IRON	MG/KG-DRY	5.00	5.19	104	90-110
06/23/92	CCV*QC*1	938*CLP90	POTASSIUM	MG/KG-DRY	5.00	5.21	104	90-110
06/23/92	CCV*QC*1	924*CLP90	MAGNESIUM	MG/KG-DRY	5.00	5.14	103	90-110
06/23/92	CCV*QC*1	1053*CLP90	MANGANESE	MG/KG-DRY	0.500	0.507	101	90-110
06/23/92	CCV*QC*1	934*CLP90	SODIUM	MG/KG-DRY	5.00	5.15	103	90-110
/92	CCV*QC*1	1068*CLP90	NICKEL	MG/KG-DRY	0.500	0.505	101	90-110
/92	CCV*QC*1	1098*CLP90	ANTIMONY	MG/KG-DRY	0.5	0.5	100	90-110

ESE BATCH : G29032

Initial Calibration Blank Summary

DATE	SAMPLE	STORET	PARAMETER	UNITS	FOUND
06/23/92	ICB*QC*1	1078*CLP90	SILVER	MG/KG-DRY	0.003
06/23/92	ICB*QC*1	1108*CLP90	ALUMINUM	MG/KG-DRY	0.012
06/23/92	ICB*QC*1	1008*CLP90	BARIUM	MG/KG-DRY	ND
06/23/92	ICB*QC*1	1013*CLP90	BERYLLIUM	MG/KG-DRY	0.002
06/23/92	ICB*QC*1	917*CLP90	CALCIUM	MG/KG-DRY	0.001
06/23/92	ICB*QC*1	1028*CLP90	CADMIUM	MG/KG-DRY	0.0001
06/23/92	ICB*QC*1	1038*CLP90	COBALT	MG/KG-DRY	ND
06/23/92	ICB*QC*1	1029*CLP90	CHROMIUM	MG/KG-DRY	0.0004
06/23/92	ICB*QC*1	1043*CLP90	COPPER	MG/KG-DRY	0.0007
06/23/92	ICB*QC*1	1170*CLP90	IRON	MG/KG-DRY	0.001
06/23/92	ICB*QC*1	938*CLP90	POTASSIUM	MG/KG-DRY	0.398
06/23/92	ICB*QC*1	924*CLP90	MAGNESIUM	MG/KG-DRY	0.020
06/23/92	ICB*QC*1	1053*CLP90	MANGANESE	MG/KG-DRY	0.0003
06/23/92	ICB*QC*1	934*CLP90	SODIUM	MG/KG-DRY	0.015
06/23/92	ICB*QC*1	1068*CLP90	NICKEL	MG/KG-DRY	ND
06/23/92	ICB*QC*1	1098*CLP90	ANTIMONY	MG/KG-DRY	ND
06/23/92	ICB*QC*1	1088*CLP90	VANADIUM	MG/KG-DRY	0.005
06/23/92	ICB*QC*1	1093*CLP90	ZINC	MG/KG-DRY	ND

Continuing Calibration Blank Sample Summary

DATE	SAMPLE	STORET	PARAMETER	UNITS	FOUND
06/23/92	CCB*QC*1	1078*CLP90	SILVER	MG/KG-DRY	0.001
06/23/92	CCB*QC*1	1108*CLP90	ALUMINUM	MG/KG-DRY	0.005
06/23/92	CCB*QC*1	1008*CLP90	BARIUM	MG/KG-DRY	0.0001
06/23/92	CCB*QC*1	1013*CLP90	BERYLLIUM	MG/KG-DRY	0.001
06/23/92	CCB*QC*1	917*CLP90	CALCIUM	MG/KG-DRY	ND
06/23/92	CCB*QC*1	1028*CLP90	CADMIUM	MG/KG-DRY	ND
06/23/92	CCB*QC*1	1038*CLP90	COBALT	MG/KG-DRY	ND
06/23/92	CCB*QC*1	1029*CLP90	CHROMIUM	MG/KG-DRY	ND
06/23/92	CCB*QC*1	1043*CLP90	COPPER	MG/KG-DRY	ND
06/23/92	CCB*QC*1	1170*CLP90	IRON	MG/KG-DRY	0.002
06/23/92	CCB*QC*1	938*CLP90	POTASSIUM	MG/KG-DRY	0.209
06/23/92	CCB*QC*1	924*CLP90	MAGNESIUM	MG/KG-DRY	0.012
06/23/92	CCB*QC*1	1053*CLP90	MANGANESE	MG/KG-DRY	0.0001
06/23/92	CCB*QC*1	934*CLP90	SODIUM	MG/KG-DRY	ND
06/23/92	CCB*QC*1	1068*CLP90	NICKEL	MG/KG-DRY	ND
06/23/92	CCB*QC*1	1098*CLP90	ANTIMONY	MG/KG-DRY	ND
06/23/92	CCB*QC*1	1088*CLP90	VANADIUM	MG/KG-DRY	0.002
06/23/92	CCB*QC*1	1093*CLP90	ZINC	MG/KG-DRY	ND
06/23/92	CCB*QC*2	1078*CLP90	SILVER	MG/KG-DRY	0.001
06/23/92	CCB*QC*2	1108*CLP90	ALUMINUM	MG/KG-DRY	0.006
06/23/92	CCB*QC*2	1008*CLP90	BARIUM	MG/KG-DRY	0.0003
06/23/92	CCB*QC*2	1013*CLP90	BERYLLIUM	MG/KG-DRY	ND
06/23/92	CCB*QC*2	917*CLP90	CALCIUM	MG/KG-DRY	ND
06/23/92	CCB*QC*2	1028*CLP90	CADMIUM	MG/KG-DRY	ND
06/23/92	CCB*QC*2	1038*CLP90	COBALT	MG/KG-DRY	0.002
06/23/92	CCB*QC*2	1029*CLP90	CHROMIUM	MG/KG-DRY	0.0009
06/23/92	CCB*QC*2	1043*CLP90	COPPER	MG/KG-DRY	0.0004
06/23/92	CCB*QC*2	1170*CLP90	IRON	MG/KG-DRY	0.005
06/23/92	CCB*QC*2	938*CLP90	POTASSIUM	MG/KG-DRY	0.212
06/23/92	CCB*QC*2	924*CLP90	MAGNESIUM	MG/KG-DRY	0.016
06/23/92	CCB*QC*2	1053*CLP90	MANGANESE	MG/KG-DRY	ND
06/23/92	CCB*QC*2	934*CLP90	SODIUM	MG/KG-DRY	0.001
06/23/92	CCB*QC*2	1068*CLP90	NICKEL	MG/KG-DRY	ND
06/23/92	CCB*QC*2	1098*CLP90	ANTIMONY	MG/KG-DRY	0.0005
06/23/92	CCB*QC*2	1088*CLP90	VANADIUM	MG/KG-DRY	0.003
06/23/92	CCB*QC*2	1093*CLP90	ZINC	MG/KG-DRY	0.0002

Initial Calibration Verification Sample Summary

DATE	SAMPLE	STORET	PARAMETER	UNITS	TARGET	FOUND	%RECV	RECV CRIT
06/23/92	ICV*ICAP19*1	1078*CLP90	SILVER	MG/KG-DRY		ND		90-110
06/23/92	ICV*ICAP19*1	1108*CLP90	ALUMINUM	MG/KG-DRY		ND		90-110
06/23/92	ICV*ICAP19*1	1008*CLP90	BARIUM	MG/KG-DRY		ND		90-110
06/23/92	ICV*ICAP19*1	1013*CLP90	BERYLLIUM	MG/KG-DRY	1.00	0.985	98.5	90-110
06/23/92	ICV*ICAP19*1	917*CLP90	CALCIUM	MG/KG-DRY	1.00	1.04	104	90-110
06/23/92	ICV*ICAP19*1	1028*CLP90	CADMIUM	MG/KG-DRY	1.00	0.986	98.6	90-110
06/23/92	ICV*ICAP19*1	1038*CLP90	COBALT	MG/KG-DRY	1.00	0.990	99.0	90-110
06/23/92	ICV*ICAP19*1	1029*CLP90	CHROMIUM	MG/KG-DRY	1.00	1.00	100.0	90-110
06/23/92	ICV*ICAP19*1	1043*CLP90	COPPER	MG/KG-DRY	1.00	0.997	99.7	90-110
06/23/92	ICV*ICAP19*1	1170*CLP90	IRON	MG/KG-DRY	1.00	1.02	102	90-110
06/23/92	ICV*ICAP19*1	938*CLP90	POTASSIUM	MG/KG-DRY		ND		90-110
06/23/92	ICV*ICAP19*1	924*CLP90	MAGNESIUM	MG/KG-DRY	1.00	1.04	104	90-110
06/23/92	ICV*ICAP19*1	1053*CLP90	MANGANESE	MG/KG-DRY	1.00	0.999	99.9	90-110
06/23/92	ICV*ICAP19*1	934*CLP90	SODIUM	MG/KG-DRY		ND		90-110
06/23/92	ICV*ICAP19*1	1068*CLP90	NICKEL	MG/KG-DRY	1.00	0.994	99.4	90-110

ESE BATCH : G29032

Continuing Calibration Verification Sample Summary

DATE	SAMPLE	STORET	PARAMETER	UNITS	TARGET	FOUND	%RECV	RECV CRIT
06/23/92	CCV*QC*1	1088*CLP90	VANADIUM	MG/KG-DRY	0.500	0.510	102	90-110
06/23/92	CCV*QC*1	1093*CLP90	ZINC	MG/KG-DRY	0.500	0.501	100	90-110
06/23/92	CCV*QC*2	1078*CLP90	SILVER	MG/KG-DRY	0.500	0.508	102	90-110
06/23/92	CCV*QC*2	1108*CLP90	ALUMINUM	MG/KG-DRY	5.00	5.14	103	90-110
`3/92	CCV*QC*2	1008*CLP90	BARIUM	MG/KG-DRY	0.500	0.508	102	90-110
3/92	CCV*QC*2	1013*CLP90	BERYLLIUM	MG/KG-DRY	0.500	0.511	102	90-110
23/92	CCV*QC*2	917*CLP90	CALCIUM	MG/KG-DRY	5.00	5.18	104	90-110
06/23/92	CCV*QC*2	1028*CLP90	CADMIUM	MG/KG-DRY	0.500	0.497	99.4	90-110
06/23/92	CCV*QC*2	1038*CLP90	COBALT	MG/KG-DRY	0.500	0.498	99.6	90-110
06/23/92	CCV*QC*2	1029*CLP90	CHROMIUM	MG/KG-DRY	0.500	0.501	100	90-110
06/23/92	CCV*QC*2	1043*CLP90	COPPER	MG/KG-DRY	0.500	0.505	101	90-110
06/23/92	CCV*QC*2	1170*CLP90	IRON	MG/KG-DRY	5.00	5.15	103	90-110
06/23/92	CCV*QC*2	938*CLP90	POTASSIUM	MG/KG-DRY	5.00	5.20	104	90-110
06/23/92	CCV*QC*2	924*CLP90	MAGNESIUM	MG/KG-DRY	5.00	5.12	102	90-110
06/23/92	CCV*QC*2	1053*CLP90	MANGANESE	MG/KG-DRY	0.500	0.503	101	90-110
06/23/92	CCV*QC*2	934*CLP90	SODIUM	MG/KG-DRY	5.00	5.13	103	90-110
06/23/92	CCV*QC*2	1068*CLP90	NICKEL	MG/KG-DRY	0.500	0.504	101	90-110
06/23/92	CCV*QC*2	1098*CLP90	ANTIMONY	MG/KG-DRY	0.5	0.5	100	90-110
06/23/92	CCV*QC*2	1088*CLP90	VANADIUM	MG/KG-DRY	0.500	0.505	101	90-110
06/23/92	CCV*QC*2	1093*CLP90	ZINC	MG/KG-DRY	0.500	0.496	99.2	90-110
06/23/92	CCV*QC*3	1078*CLP90	SILVER	MG/KG-DRY	0.500	0.510	102	90-110
06/23/92	CCV*QC*3	1108*CLP90	ALUMINUM	MG/KG-DRY	5.00	5.12	102	90-110
06/23/92	CCV*QC*3	1008*CLP90	BARIUM	MG/KG-DRY	0.500	0.501	100	90-110
06/23/92	CCV*QC*3	1013*CLP90	BERYLLIUM	MG/KG-DRY	0.500	0.512	102	90-110
06/23/92	CCV*QC*3	917*CLP90	CALCIUM	MG/KG-DRY	5.00	5.16	103	90-110
06/23/92	CCV*QC*3	1028*CLP90	CADMIUM	MG/KG-DRY	0.500	0.497	99.4	90-110
06/23/92	CCV*QC*3	1038*CLP90	COBALT	MG/KG-DRY	0.500	0.496	99.2	90-110
06/23/92	CCV*QC*3	1029*CLP90	CHROMIUM	MG/KG-DRY	0.500	0.500	100.0	90-110
06/23/92	CCV*QC*3	1043*CLP90	COPPER	MG/KG-DRY	0.500	0.503	101	90-110
06/23/92	CCV*QC*3	1170*CLP90	IRON	MG/KG-DRY	5.00	5.11	102	90-110
06/23/92	CCV*QC*3	938*CLP90	POTASSIUM	MG/KG-DRY	5.00	5.40	108	90-110
06/23/92	CCV*QC*3	924*CLP90	MAGNESIUM	MG/KG-DRY	5.00	5.16	103	90-110
06/23/92	CCV*QC*3	1053*CLP90	MANGANESE	MG/KG-DRY	0.500	0.501	100	90-110
06/23/92	CCV*QC*3	934*CLP90	SODIUM	MG/KG-DRY	5.00	5.11	102	90-110
06/23/92	CCV*QC*3	1068*CLP90	NICKEL	MG/KG-DRY	0.500	0.494	98.8	90-110
06/23/92	CCV*QC*3	1098*CLP90	ANTIMONY	MG/KG-DRY	0.5	0.5	100	90-110
06/23/92	CCV*QC*3	1088*CLP90	VANADIUM	MG/KG-DRY	0.500	0.505	101	90-110
06/23/92	CCV*QC*3	1093*CLP90	ZINC	MG/KG-DRY	0.500	0.500	100.0	90-110

od Blank Sample Summary

	SAMPLE	STORET	PARAMETER	UNITS	FOUND
06/23/92	MB*QC*1	1078*CLP90	SILVER	MG/KG-DRY	ND
06/23/92	MB*QC*1	1108*CLP90	ALUMINUM	MG/KG-DRY	ND
06/23/92	MB*QC*1	1008*CLP90	BARIUM	MG/KG-DRY	ND
06/23/92	MB*QC*1	1013*CLP90	BERYLLIUM	MG/KG-DRY	ND
06/23/92	MB*QC*1	917*CLP90	CALCIUM	MG/KG-DRY	ND
06/23/92	MB*QC*1	1028*CLP90	CADMIUM	MG/KG-DRY	ND
06/23/92	MB*QC*1	1038*CLP90	COBALT	MG/KG-DRY	ND
06/23/92	MB*QC*1	1029*CLP90	CHROMIUM	MG/KG-DRY	ND
06/23/92	MB*QC*1	1043*CLP90	COPPER	MG/KG-DRY	ND
06/23/92	MB*QC*1	1170*CLP90	IRON	MG/KG-DRY	ND
06/23/92	MB*QC*1	938*CLP90	POTASSIUM	MG/KG-DRY	ND
06/23/92	MB*QC*1	924*CLP90	MAGNESIUM	MG/KG-DRY	ND
06/23/92	MB*QC*1	1053*CLP90	MANGANESE	MG/KG-DRY	ND
06/23/92	MB*QC*1	934*CLP90	SODIUM	MG/KG-DRY	ND
06/23/92	MB*QC*1	1068*CLP90	NICKEL	MG/KG-DRY	ND
06/23/92	MB*QC*1	1098*CLP90	ANTIMONY	MG/KG-DRY	ND
06/23/92	MB*QC*1	1088*CLP90	VANADIUM	MG/KG-DRY	ND
06/23/92	MB*QC*1	1093*CLP90	ZINC	MG/KG-DRY	ND

Laboratory Control Sample Summary

DATE	SAMPLE	STORET	PARAMETER	%RECV	RECV CRIT	UNITS	TARGET	FOUND
06/23/92	LCS*QC*1	1078*CLP90	SILVER	91.6	80-120	MG/KG-DRY	25.0	22.9
06/23/92	LCS*QC*1	1108*CLP90	ALUMINUM	71.9	80-120	MG/KG-DRY	9510	6840
06/23/92	LCS*QC*1	1008*CLP90	BARIUM	91.6	80-120	MG/KG-DRY	92.0	84.3
06/23/92	LCS*QC*1	1013*CLP90	BERYLLIUM	92.0	80-120	MG/KG-DRY	25.0	23.0
06/23/92	LCS*QC*1	917*CLP90	CALCIUM	80.8	80-120	MG/KG-DRY	7430	6000
06/23/92	LCS*QC*1	1028*CLP90	CADMIUM	93.1	80-120	MG/KG-DRY	116	108
06/23/92	LCS*QC*1	1038*CLP90	COBALT	86.9	80-120	MG/KG-DRY	81.0	70.4
06/23/92	LCS*QC*1	1029*CLP90	CHROMIUM	85.9	80-120	MG/KG-DRY	87.0	74.7
06/23/92	LCS*QC*1	1043*CLP90	COPPER	75.9	80-120	MG/KG-DRY	93.0	70.6
06/23/92	LCS*QC*1	1170*CLP90	IRON	83.1	80-120	MG/KG-DRY	13000	10800
[illegible]/92	LCS*QC*1	938*CLP90	POTASSIUM	76.1	80-120	MG/KG-DRY	3560	2710
92	LCS*QC*1	924*CLP90	MAGNESIUM	82.3	80-120	MG/KG-DRY	3500	2880
92	LCS*QC*1	1053*CLP90	MANGANESE	87.6	80-120	MG/KG-DRY	466	408

ESC BATCH : 629032

Laboratory Control Sample Summary

DATE	SAMPLE	STORET	PARAMETER	%RECV	RECV CRIT	UNITS	TARGET	FOUND
06/23/92	LCS*QC*1	934*CLP90	SODIUM	110.2	80-120	MG/KG-DRY	420	463
06/23/92	LCS*QC*1	1068*CLP90	NICKEL	94.4	80-120	MG/KG-DRY	108	102
06/23/92	LCS*QC*1	1098*CLP90	ANTIMONY	28	80-120	MG/KG-DRY	57	16
06/23/92	LCS*QC*1	1088*CLP90	VANADIUM	80.0	80-120	MG/KG-DRY	97.0	77.6
06/23/92	LCS*QC*1	1093*CLP90	ZINC	92.8	80-120	MG/KG-DRY	374	347

Sample Matrix Spike Recovery Summary

DATE	SAMPLE	STORET	PARAMETER	%RECV	RECV CRIT	UNSPIKED	UNITS	TARGET	FOUND	RPD
06/23/92	SPM*ALS2B*51	1078*CLP90	SILVER	94.0	75-125	0.223	MG/KG-DRY	11.7	11.0	
06/23/92	SPM*ALS2B*51	1108*CLP90	ALUMINUM	143.8	75-125	4200	MG/KG-DRY	466	670	
06/23/92	SPM*ALS2B*51	1008*CLP90	BARIUM	97.2	75-125	34.0	MG/KG-DRY	466	453	
06/23/92	SPM*ALS2B*51	1013*CLP90	BERYLLIUM	101.7	75-125	0.0	MG/KG-DRY	11.7	11.9	
06/23/92	SPM*ALS2B*51	917*CLP90	CALCIUM	100.0	80-120	1730	MG/KG-DRY	2330	2330	
06/23/92	SPM*ALS2B*51	1028*CLP90	CADMIUM	89.7	75-125	0.680	MG/KG-DRY	11.7	10.5	
06/23/92	SPM*ALS2B*51	1038*CLP90	COBALT	95.7	75-125	4.02	MG/KG-DRY	117	112	
06/23/92	SPM*ALS2B*51	1029*CLP90	CHROMIUM	96.4	75-125	73.1	MG/KG-DRY	46.6	44.9	
06/23/92	SPM*ALS2B*51	1043*CLP90	COPPER	94.9	75-125	14.8	MG/KG-DRY	58.3	55.3	
06/23/92	SPM*ALS2B*51	1170*CLP90	IRON	266.1	80-120	8150	MG/KG-DRY	233	620	
06/23/92	SPM*ALS2B*51	938*CLP90	POTASSIUM	87.1	80-120	754	MG/KG-DRY	2330	2030	
06/23/92	SPM*ALS2B*51	924*CLP90	MAGNESIUM	99.1	80-120	2450	MG/KG-DRY	2330	2310	
06/23/92	SPM*ALS2B*51	1053*CLP90	MANGANESE	96.6	75-125	90.9	MG/KG-DRY	117	113	
06/23/92	SPM*ALS2B*51	934*CLP90	SODIUM	99.1	80-120	260	MG/KG-DRY	2330	2310	
06/23/92	SPM*ALS2B*51	1068*CLP90	NICKEL	96.6	75-125	27.4	MG/KG-DRY	117	113	
06/23/92	SPM*ALS2B*51	1098*CLP90	ANTIMONY	92	75-125	0.0	MG/KG-DRY	120	110	
06/23/92	SPM*ALS2B*51	1088*CLP90	VANADIUM	98.3	75-125	16.1	MG/KG-DRY	117	115	
06/23/92	SPM*ALS2B*51	1093*CLP90	ZINC	94.0	75-125	19.8	MG/KG-DRY	117	110	

Replicate Analysis Sample Summary

DATE	SAMPLE	STORET	PARAMETER	UNITS	REP #1	REP #2	RPD	RPD CRIT
06/23/92	RP*ALS2B*51	1078*CLP90	SILVER	MG/KG-DRY	<1.13	<1.11	1.79	20
06/23/92	RP*ALS2B*51	1108*CLP90	ALUMINUM	MG/KG-DRY	4200	4120	1.92	20
06/23/92	RP*ALS2B*51	1008*CLP90	BARIUM	MG/KG-DRY	34.0	33.3	2.08	20
06/23/92	RP*ALS2B*51	1013*CLP90	BERYLLIUM	MG/KG-DRY	<0.587	<0.579	1.37	20
06/23/92	RP*ALS2B*51	917*CLP90	CALCIUM	MG/KG-DRY	1730	1760	1.72	20
06/23/92	RP*ALS2B*51	1028*CLP90	CADMIUM	MG/KG-DRY	<0.915	<0.903	1.32	20
06/23/92	RP*ALS2B*51	1038*CLP90	COBALT	MG/KG-DRY	<4.04	<4.00	0.995	20
06/23/92	RP*ALS2B*51	1029*CLP90	CHROMIUM	MG/KG-DRY	73.1	72.3	1.10	20
06/23/92	RP*ALS2B*51	1043*CLP90	COPPER	MG/KG-DRY	14.8	14.9	0.673	20
06/23/92	RP*ALS2B*51	1170*CLP90	IRON	MG/KG-DRY	8150	8000	1.86	20
06/23/92	RP*ALS2B*51	938*CLP90	POTASSIUM	MG/KG-DRY	754	684	9.74	20
06/23/92	RP*ALS2B*51	924*CLP90	MAGNESIUM	MG/KG-DRY	2450	2430	0.820	20
06/23/92	RP*ALS2B*51	1053*CLP90	MANGANESE	MG/KG-DRY	90.9	90.1	0.884	20
06/23/92	RP*ALS2B*51	934*CLP90	SODIUM	MG/KG-DRY	260	270	3.77	20
06/23/92	RP*ALS2B*51	1068*CLP90	NICKEL	MG/KG-DRY	27.4	27.2	0.733	20
06/23/92	RP*ALS2B*51	1098*CLP90	ANTIMONY	MG/KG-DRY	<8.8	<8.7	1.1	20
06/23/92	RP*ALS2B*51	1088*CLP90	VANADIUM	MG/KG-DRY	16.1	15.5	3.80	20
06/23/92	RP*ALS2B*51	1093*CLP90	ZINC	MG/KG-DRY	19.8	19.7	0.506	20

Serial Dilution Sample Summary

DATE	SAMPLE	STORET	PARAMETER	UNITS	REP #1	REP #2	RPD	RPD CRIT
06/23/92	SD*ALS2B*51	1078*CLP90	SILVER	MG/KG-DRY	0.223	0.938	NC	10
06/23/92	SD*ALS2B*51	1108*CLP90	ALUMINUM	MG/KG-DRY	4200	3910	7.15	10
06/23/92	SD*ALS2B*51	1008*CLP90	BARIUM	MG/KG-DRY	34.0	31.7	7.00	10
06/23/92	SD*ALS2B*51	1013*CLP90	BERYLLIUM	MG/KG-DRY	0.0	0.235	NC	10
06/23/92	SD*ALS2B*51	917*CLP90	CALCIUM	MG/KG-DRY	1730	1610	7.19	10
06/23/92	SD*ALS2B*51	1028*CLP90	CADMIUM	MG/KG-DRY	0.680	0.352	63.6	10
06/23/92	SD*ALS2B*51	1038*CLP90	COBALT	MG/KG-DRY	4.02	4.29	6.50	10
06/23/92	SD*ALS2B*51	1029*CLP90	CHROMIUM	MG/KG-DRY	73.1	69.4	5.19	10
06/23/92	SD*ALS2B*51	1043*CLP90	COPPER	MG/KG-DRY	14.8	13.6	8.45	10
06/23/92	SD*ALS2B*51	1170*CLP90	IRON	MG/KG-DRY	8150	7650	6.33	10
06/23/92	SD*ALS2B*51	938*CLP90	POTASSIUM	MG/KG-DRY	754	834	10.1	10
06/23/92	SD*ALS2B*51	924*CLP90	MAGNESIUM	MG/KG-DRY	2450	2300	6.32	10
06/23/92	SD*ALS2B*51	1053*CLP90	MANGANESE	MG/KG-DRY	90.9	85.2	6.47	10
06/23/92	SD*ALS2B*51	934*CLP90	SODIUM	MG/KG-DRY	260	240	8.00	10
06/23/92	SD*ALS2B*51	1068*CLP90	NICKEL	MG/KG-DRY	27.4	21.1	26.0	10
06/23/92	SD*ALS2B*51	1098*CLP90	ANTIMONY	MG/KG-DRY	0.0	ND	NC	10
06/23/92	SD*ALS2B*51	1088*CLP90	VANADIUM	MG/KG-DRY	16.1	19.3	18.1	10
06/23/92	SD*ALS2B*51	1093*CLP90	ZINC	MG/KG-DRY	19.8	19.3	2.56	10

ESE BATCH : G29032

Environmental Science and Engineering Analytical Services
Computer QC Checks

Batch No.: G29032 Analysis Date: 06/23/92 Analyst: JEFF MILLER

	Yes	"Exceptions" No	Comment / Corrective Action
Analysis holding time within criteria?	X		
Extract holding time within criteria?	X		
ICB present?	X		
ICB within acceptance criteria?	X		
CCB present?	X		
CCB within acceptance criteria?	X		
ICV present?	X		
ICV within acceptance criteria?	X		
CCV present?	X		
CCV within acceptance criteria?	X		
Method blank present?	X		
Method blank within acceptance criteria?	X		
LCS present?	X		
LCS within acceptance criteria?		X	1108*CLP90 1098*CLP90
Sample matrix spike present?	X		
Sample matrix spike within acceptance criteria?		X	1108*CLP90
Sample replicate present?	X		
Sample replicate within acceptance criteria?	X		
SD present?	X		
SD within acceptance criteria?	X		

Note: Any "NO" answer requires a comment.

OVERRIDE COMMENTS

:LCS NOT WITHIN ACCEPTANCE CRITERIA.
EXPL:% RECOVERIES ARE WITHIN ADVISORY RANGE./JM/6/23/92

PROB:SAMPLE REPLICATE NOT WITHIN ACCEPTANCE CRITERIA.
EXPL:WITHIN CLP CRITERIA. SAMPLES >5x CRDL AND ARE +/- 20% RECOVERY.

Mercury

ESE BATCH : G28661
CLASSIFICATION : MERCURY - CLP SOW 3/90

STATUS : FINAL

METHOD BLANK CORRECTION METHOD : NONE

FIELD GRP	PROJECT NUMBER	PROJECT NAME	LAB COORDINATOR
ALS2B	3914042 0201	JMM/ALAMEDA CTO-121	JACKIE HARGROVE-ELLI

SAMPLE CODE	CLIENT ID	DATE ANALYZED	TIME ANALYZED
ALS2B*27	M-BG1		
ALS2B*28	M-BG1		
ALS2B*29	M-BG1		
ALS2B*30	M-BG1		
ALS2B*31	M-BG2		
ALS2B*32	M-BG2		
ALS2B*33	M-BG2		
ALS2B*34	M-BG2		
ALS2B*35	M-BG3		
ALS2B*36	M-BG3		
ALS2B*37	M-BG3		
ALS2B*38	M-BG3		
ALS2B*39	M-BG4		
ALS2B*40	M-BG4		
ALS2B*41	M-BG4		
ALS2B*42	M-BG4		
ALS2B*43	BG-DUP1		
ALS2B*73	B-05HW-02		
ALS2B*74	B-05HW-02		
ALS2B*75	B-05HW-02		
ALS2B*76	B-05HW-02		
ALS2B*77	M-05HW-01		
ALS2B*78	M-05HW-01		
ALS2B*79	M-05HW-01		
ALS2B*80	M-05HW-01		
ALS2B*81	05HW-DUP1		
ALS2B*83	M-05BS-01		
ALS2B*84	M-05BS-01		
ALS2B*85	M-05BS-01		
ALS2B*86	M-05BS-01		

ESE BATCH : 028661

Initial Calibration Blank Summary

DATE	SAMPLE	STORET	PARAMETER	UNITS	FOUND
06/11/92	ICB*QC*1	99580*CLP90	MERCURY	MG/KG-DRY	ND

Continuing Calibration Blank Sample Summary

DATE	SAMPLE	STORET	PARAMETER	UNITS	FOUND
06/11/92	CCB*QC*1	99580*CLP90	MERCURY	MG/KG-DRY	ND
06/11/92	CCB*QC*2	99580*CLP90	MERCURY	MG/KG-DRY	ND
06/11/92	CCB*QC*3	99580*CLP90	MERCURY	MG/KG-DRY	ND
06/11/92	CCB*QC*4	99580*CLP90	MERCURY	MG/KG-DRY	ND

Initial Calibration Verification Sample Summary

DATE	SAMPLE	STORET	PARAMETER	UNITS	TARGET	FOUND	%RECV	RECV CRIT
06/11/92	ICV*PE-PURE*1	99580*CLP90	MERCURY	MG/KG-DRY	0.005	0.005	100.0	80-120

Continuing Calibration Verification Sample Summary

DATE	SAMPLE	STORET	PARAMETER	UNITS	TARGET	FOUND	%RECV	RECV CRIT
06/11/92	CCV*QC*1	99580*CLP90	MERCURY	MG/KG-DRY	0.005	0.005	100.0	80-120
06/11/92	CCV*QC*2	99580*CLP90	MERCURY	MG/KG-DRY	0.005	0.005	100.0	80-120
06/11/92	CCV*QC*3	99580*CLP90	MERCURY	MG/KG-DRY	0.005	0.005	100.0	80-120
06/11/92	CCV*QC*4	99580*CLP90	MERCURY	MG/KG-DRY	0.005	0.005	100.0	80-120
06/11/92	CCV*QC*5	99580*CLP90	MERCURY	MG/KG-DRY	0.005	0.005	100.0	80-120

Method Blank Sample Summary

DATE	SAMPLE	STORET	PARAMETER	UNITS	FOUND
06/11/92	MB*QC*1	99580*CLP90	MERCURY	MG/KG-DRY	ND
06/11/92	MB*QC*2	99580*CLP90	MERCURY	MG/KG-DRY	ND

Laboratory Control Sample Summary

DATE	SAMPLE	STORET	PARAMETER	%RECV	RECV CRIT	UNITS	TARGET	FOUND
06/11/92	LCS*SP*1	99580*CLP90	MERCURY	100.6	80-120	MG/KG-DRY	0.478	0.481

Standard Matrix Spike Recovery Summary

DATE	SAMPLE	STORET	PARAMETER	%RECV	RECV CRIT	UNITS	TARGET	FOUND
1/92	SP*QC*2	99580*CLP90	MERCURY	123.0	80-120	MG/KG-DRY	0.486	0.598

Sample Matrix Spike Recovery Summary

DATE	SAMPLE	STORET	PARAMETER	%RECV	RECV CRIT	UNSPIKED	UNITS	TARGET	FOUND	RPD
06/11/92	SPM*ALS2B*43	99580*CLP90	MERCURY	107.2	75-125	0.0	MG/KG-DRY	0.572	0.613	
06/11/92	SPM*ALS2B*81	99580*CLP90	MERCURY	107.3	75-125	0.0	MG/KG-DRY	0.550	0.590	

Replicate Analysis Sample Summary

DATE	SAMPLE	STORET	PARAMETER	UNITS	REP #1	REP #2	RPD	RPD CRIT
06/11/92	RP*ALS2B*43	99580*CLP90	MERCURY	MG/KG-DRY	<0.085	<0.072	16.6	20
06/11/92	RP*ALS2B*81	99580*CLP90	MERCURY	MG/KG-DRY	<0.090	<0.085	5.71	20

ESE BATCH : G28661

Environmental Science and Engineering Analytical Services
Computer QC Checks

Batch No.: G28661 Analysis Date: 06/11/92 Analyst: CHRISTOPHER HORRELL

	Yes	"Exceptions" No	Comment / Corrective Action
Analysis holding time within criteria?	X		
Extract holding time within criteria?	X		
No. of calibration standards present acceptable?	X		
Curve correlation coefficient >= 0.995?	X		
Calibration curve y-intercept < curve detection limit?	X		
Sample responses within highest standard response?	X		
ICB present?	X		
ICB within acceptance criteria?	X		
CCB present?	X		
CCB within acceptance criteria?	X		
ICV present?	X		
ICV within acceptance criteria?	X		
CCV present?	X		
CCV within acceptance criteria?	X		
Method blank present?	X		
Method blank within acceptance criteria?	X		
LCS present?	X		
LCS within acceptance criteria?	X		
Sample matrix spike present?	X		
Sample matrix spike within acceptance criteria?	X		
Sample replicate present?	X		
Sample replicate within acceptance criteria?	X		

Note: Any "NO" answer requires a comment.

OVERRIDE COMMENTS

ESE BATCH : G28906
CLASSIFICATION : MERCURY - CLP SOW 3/90

STATUS : FINAL

METHOD BLANK CORRECTION METHOD : NONE

FLD GRP	PROJECT NUMBER	PROJECT NAME	LAB COORDINATOR
2B	3914042 0201	JMM/ALAMEDA CTO-121	JACKIE HARGROVE-ELLI

SAMPLE CODE	CLIENT ID	DATE ANALYZED	TIME ANALYZED
ALS2B*1	W04-03		
ALS2B*2	W04-04		
ALS2B*3	W04-05	06/18/92	
ALS2B*4	W04-06	06/18/92	

ESE BATCH : G28906

Initial Calibration Blank Summary

DATE	SAMPLE	STORET	PARAMETER	UNITS	FOUND
06/17/92	ICB*QC*1	99580*CLP90	MERCURY	MG/KG-DRY	ND
06/17/92	ICB*QC*2	99580*CLP90	MERCURY	MG/KG-DRY	ND

Continuing Calibration Blank Sample Summary

DATE	SAMPLE	STORET	PARAMETER	UNITS	FOUND
06/17/92	CCB*QC*1	99580*CLP90	MERCURY	MG/KG-DRY	ND
06/17/92	CCB*QC*2	99580*CLP90	MERCURY	MG/KG-DRY	ND
06/17/92	CCB*QC*3	99580*CLP90	MERCURY	MG/KG-DRY	ND
06/17/92	CCB*QC*4	99580*CLP90	MERCURY	MG/KG-DRY	ND
06/17/92	CCB*QC*5	99580*CLP90	MERCURY	MG/KG-DRY	ND

Initial Calibration Verification Sample Summary

DATE	SAMPLE	STORET	PARAMETER	UNITS	TARGET	FOUND	%RECV	RECV CRIT
06/17/92	ICV*PE-PURE*1	99580*CLP90	MERCURY	MG/KG-DRY	0.005	0.005	100.0	80-120
06/17/92	ICV*PE-PURE*2	99580*CLP90	MERCURY	MG/KG-DRY	0.005	0.004	80.0	80-120

Continuing Calibration Verification Sample Summary

DATE	SAMPLE	STORET	PARAMETER	UNITS	TARGET	FOUND	%RECV	RECV CRIT
06/17/92	CCV*QC*1	99580*CLP90	MERCURY	MG/KG-DRY	0.005	0.005	100.0	80-120
06/17/92	CCV*QC*2	99580*CLP90	MERCURY	MG/KG-DRY	0.005	0.004	80.0	80-120
06/17/92	CCV*QC*3	99580*CLP90	MERCURY	MG/KG-DRY	0.005	0.005	100.0	80-120
06/17/92	CCV*QC*4	99580*CLP90	MERCURY	MG/KG-DRY	0.005	0.005	100.0	80-120
06/17/92	CCV*QC*5	99580*CLP90	MERCURY	MG/KG-DRY	0.005	0.005	100.0	80-120

Method Blank Sample Summary

DATE	SAMPLE	STORET	PARAMETER	UNITS	FOUND
06/17/92	MB*QC*1	99580*CLP90	MERCURY	MG/KG-DRY	ND
06/17/92	MB*QC*2	99580*CLP90	MERCURY	MG/KG-DRY	ND

Laboratory Control Sample Summary

DATE	SAMPLE	STORET	PARAMETER	%RECV	RECV CRIT	UNITS	TARGET	FOUND
06/17/92	LCS*ESE*1	99580*CLP90	MERCURY	104.0	80-120	MG/KG-DRY	0.100	0.104
06/17/92	LCS*ESE*2	99580*CLP90	MERCURY	115.0	80-120	MG/KG-DRY	0.100	0.115

Sample Matrix Spike Recovery Summary

DATE	SAMPLE	STORET	PARAMETER	%RECV	RECV CRIT	UNSPIKED	UNITS	TARGET	FOUND	RPD
06/17/92	SPM*ALS2B*1	99580*CLP90	MERCURY	120.8	75-125	0.105	MG/KG-DRY	0.101	0.122	

Replicate Analysis Sample Summary

DATE	SAMPLE	STORET	PARAMETER	UNITS	REP #1	REP #2	RPD	RPD CRIT
06/17/92	RP*ALS2B*1	99580*CLP90	MERCURY	MG/KG-DRY	0.105	0.109	3.74	20

ESE BATCH : G28906

Environmental Science and Engineering Analytical Services
Computer QC Checks

Batch No.: G28906 Analysis Date: 06/17/92 Analyst: DAVID NICHOLS

	Yes	"Exceptions" No	Comment / Corrective Action
Analysis holding time within criteria?	X		
Extract holding time within criteria?	X		
No. of calibration standards present acceptable?	X		
Curve correlation coefficient >= 0.995?	X		
Calibration curve y-intercept < curve detection limit?	X		
Sample responses within highest standard response?	X		
ICB present?	X		
ICB within acceptance criteria?	X		
CCB present?	X		
CCB within acceptance criteria?	X		
ICV present?	X		
ICV within acceptance criteria?	X		
CCV present?	X		
CCV within acceptance criteria?	X		
Method blank present?	X		
Method blank within acceptance criteria?	X		
LCS present?	X		
LCS within acceptance criteria?	X		
Sample matrix spike present?	X		
Sample matrix spike within acceptance criteria?	X		
Sample replicate present?	X		
Sample replicate within acceptance criteria?	X		

*: Any "NO" answer requires a comment.

ESE BATCH : G28912
CLASSIFICATION : MERCURY, WIPE

STATUS : FINAL

METHOD BLANK CORRECTION METHOD : NONE

FIELD GRP	PROJECT NUMBER	PROJECT NAME	LAB COORDINATOR
ALS2B	3914042 0201	JMM/ALAMEDA CTO-121	JACKIE HARGROVE-ELLI

SAMPLE CODE	CLIENT ID	DATE ANALYZED	TIME ANALYZED
ALS2B*5	W04-07		
ALS2B*6	W04-08	06/18/92	
ALS2B*7	W04-09		
ALS2B*8	W04-10		
ALS2B*9	W04-11		
ALS2B*10	W04-12		
ALS2B*11	W04-13		
ALS2B*12	W04-14		
ALS2B*13	W04-DUP		
ALS2B*23	W05-10		
ALS2B*24	W05-11	06/18/92	
ALS2B*25	W05-12		

ESE BATCH : G28912

Initial Calibration Blank Summary

DATE	SAMPLE	STORET	PARAMETER	UNITS	FOUND
06/17/92	ICB*QC*1	99774*CVAA	MERCURY	UG	ND
06/17/92	ICB*QC*2	99774*CVAA	MERCURY	UG	0.00003

Continuing Calibration Blank Sample Summary

DATE	SAMPLE	STORET	PARAMETER	UNITS	FOUND
06/17/92	CCB*QC*1	99774*CVAA	MERCURY	UG	ND
06/17/92	CCB*QC*2	99774*CVAA	MERCURY	UG	ND
06/17/92	CCB*QC*3	99774*CVAA	MERCURY	UG	0.00003
06/17/92	CCB*QC*4	99774*CVAA	MERCURY	UG	0.00003

Initial Calibration Verification Sample Summary

DATE	SAMPLE	STORET	PARAMETER	UNITS	TARGET	FOUND	%RECV	RECV CRIT
06/17/92	ICV*PE-PURE*1	99774*CVAA	MERCURY	UG	0.005	0.005	100.0	80-120
06/17/92	ICV*PE-PURE*2	99774*CVAA	MERCURY	UG	0.005	0.004	80.0	80-120

Continuing Calibration Verification Sample Summary

DATE	SAMPLE	STORET	PARAMETER	UNITS	TARGET	FOUND	%RECV	RECV CRIT
06/17/92	CCV*QC*1	99774*CVAA	MERCURY	UG	0.005	0.005	100.0	80-120
06/17/92	CCV*QC*2	99774*CVAA	MERCURY	UG	0.005	0.005	100.0	80-120
06/17/92	CCV*QC*3	99774*CVAA	MERCURY	UG	0.005	0.005	100.0	80-120
06/17/92	CCV*QC*4	99774*CVAA	MERCURY	UG	0.005	0.005	100.0	80-120
06/17/92	CCV*QC*5	99774*CVAA	MERCURY	UG	0.005	0.005	100.0	80-120
06/17/92	CCV*QC*6	99774*CVAA	MERCURY	UG	0.005	0.005	100.0	80-120

Method Blank Sample Summary

DATE	SAMPLE	STORET	PARAMETER	UNITS	FOUND
06/17/92	MB*QC*1	99774*CVAA	MERCURY	UG	ND
06/17/92	MB*QC*2	99774*CVAA	MERCURY	UG	ND

Standard Matrix Spike Recovery Summary

DATE	SAMPLE	STORET	PARAMETER	%RECV	RECV CRIT	UNITS	TARGET	FOUND
06/17/92	SP*QC*1	99774*CVAA	MERCURY	100.0	83-125	UG	0.001	0.001
06/17/92	SP*QC*2	99774*CVAA	MERCURY	100.0	83-125	UG	0.001	0.001

ESE BATCH : G28912

Environmental Science and Engineering Analytical Services
Computer QC Checks

Batch No.: G28912 Analysis Date: 06/17/92 Analyst: DAVID NICHOLS

	Yes	"Exceptions" No	Comment / Corrective Action
Analysis holding time within criteria?	X		
Extract holding time within criteria?	X		
No. of calibration standards present acceptable?	X		
Curve correlation coefficient >= 0.995?	X		
Calibration curve y-intercept < curve detection limit?	X		
Sample responses within highest standard response?	X		
ICV present?	X		
ICV within acceptance criteria?	X		
CCV present?	X		
CCV within acceptance criteria?	X		
Method blank present?	X		
Method blank within acceptance criteria?	X		
Standard matrix spike present?	X		
Standard matrix spike within acceptance criteria?	X		

Note: Any "NO" answer requires a comment.

OVERRIDE COMMENTS

ESE BATCH : G28980
CLASSIFICATION : MERCURY, WIPE

STATUS : FINAL

METHOD BLANK CORRECTION METHOD : NONE

FIELD GRP	PROJECT NUMBER	PROJECT NAME	LAB COORDINATOR
?B	3914042 0201	JMM/ALAMEDA CTO-121	JACKIE HARGROVE-ELLI

SAMPLE CODE	CLIENT ID	DATE ANALYZED	TIME ANALYZED
ALS2B*18	W05-05		
ALS2B*19	W05-06		
ALS2B*20	W05-07		
ALS2B*21	W05-08		
ALS2B*22	W05-09		
ALS2B*26	W05-DUP		

ESE BATCH : G28980

Initial Calibration Blank Summary

DATE	SAMPLE	STORET	PARAMETER	UNITS	FOUND
06/19/92	ICB*QC*1	99774*CVAA	MERCURY	UG	ND

Continuing Calibration Blank Sample Summary

DATE	SAMPLE	STORET	PARAMETER	UNITS	FOUND
06/19/92	CCB*QC*4	99774*CVAA	MERCURY	UG	ND

Initial Calibration Verification Sample Summary

DATE	SAMPLE	STORET	PARAMETER	UNITS	TARGET	FOUND	%RECV	RECV CRIT
06/19/92	ICV*PE-PURE*1	99774*CVAA	MERCURY	UG	5.00	4.58	91.6	80-120

Continuing Calibration Verification Sample Summary

DATE	SAMPLE	STORET	PARAMETER	UNITS	TARGET	FOUND	%RECV	RECV CRIT
06/19/92	CCV*QC*5	99774*CVAA	MERCURY	UG	5.00	4.86	97.2	80-120

Method Blank Sample Summary

DATE	SAMPLE	STORET	PARAMETER	UNITS	FOUND
06/19/92	MB*QC*2	99774*CVAA	MERCURY	UG	ND

Standard Matrix Spike Recovery Summary

DATE	SAMPLE	STORET	PARAMETER	%RECV	RECV CRIT	UNITS	TARGET	FOUND
06/19/92	SP*QC*2	99774*CVAA	MERCURY	96.0	83-125	UG	0.100	0.096

ESE BATCH : G28980

Environmental Science and Engineering Analytical Services

Computer QC Checks

Batch No.: G28980 Analysis Date: 06/19/92 Analyst: MARLENE BANNER

	Yes	"Exceptions" No	Comment / Corrective Action
Analysis holding time within criteria?	X		
Extract holding time within criteria?	X		
No. of calibration standards present acceptable?	X		
Curve correlation coefficient >= 0.995?	X		
Calibration curve y-intercept < curve detection limit?	X		
Sample responses within highest standard response?	X		
ICV present?	X		
ICV within acceptance criteria?	X		
CCV present?	X		
CCV within acceptance criteria?	X		
Method blank present?	X		
Method blank within acceptance criteria?	X		
Standard matrix spike present?	X		
Standard matrix spike within acceptance criteria?	X		

Note: Any "NO" answer requires a comment.

ESE BATCH : G28956
CLASSIFICATION : MERCURY - CLP SOW 3/90

STATUS : FINAL

METHOD BLANK CORRECTION METHOD : NONE

FIELD GRP	PROJECT NUMBER	PROJECT NAME	LAB COORDINATOR
ALS2B	3914042 0201	JMM/ALAMEDA CTO-121	JACKIE HARGROVE-ELLI

SAMPLE CODE	CLIENT ID	DATE ANALYZED	TIME ANALYZED
ALS2B*14	W05-01		
ALS2B*15	W05-02		
ALS2B*16	W05-03		
ALS2B*17	W05-04		
ALS2B*44	B-05PS-01		
ALS2B*45	B-05PS-01		
ALS2B*46	B-05PS-01		
ALS2B*48	B-05PS-02		
ALS2B*49	B-05PS-02		
ALS2B*50	B-05PS-03		
ALS2B*51	B-05PS-03		
ALS2B*52	B-05PS-04		
ALS2B*53	B-05PS-04		
ALS2B*54	B-05PS-05		
ALS2B*55	B-05PS-05		
ALS2B*68	05PS-DUP1		
ALS2B*70	B-05SP-01		
ALS2B*71	B-05WT-01		
ALS2B*72	B-05WT-02		
ALS2B*82	B-05BS-02		

ESE BATCH : G28956

Initial Calibration Blank Summary

DATE	SAMPLE	STORET	PARAMETER	UNITS	FOUND
06/19/92	ICB*QC*1	99580*CLP90	MERCURY	MG/KG-DRY	ND

tinuing Calibration Blank Sample Summary

E	SAMPLE	STORET	PARAMETER	UNITS	FOUND
06/19/92	CCB*QC*1	99580*CLP90	MERCURY	MG/KG-DRY	ND
06/19/92	CCB*QC*2	99580*CLP90	MERCURY	MG/KG-DRY	ND
06/19/92	CCB*QC*3	99580*CLP90	MERCURY	MG/KG-DRY	ND

Initial Calibration Verification Sample Summary

DATE	SAMPLE	STORET	PARAMETER	UNITS	TARGET	FOUND	%RECV	RECV CRIT
06/19/92	ICV*PE PURE*1	99580*CLP90	MERCURY	MG/KG-DRY	5.00	4.58	91.6	80-120

Continuing Calibration Verification Sample Summary

DATE	SAMPLE	STORET	PARAMETER	UNITS	TARGET	FOUND	%RECV	RECV CRIT
06/19/92	CCV*QC*1	99580*CLP90	MERCURY	MG/KG-DRY	5.00	5.04	101	80-120
06/19/92	CCV*QC*2	99580*CLP90	MERCURY	MG/KG-DRY	5.00	5.08	102	80-120
06/19/92	CCV*QC*3	99580*CLP90	MERCURY	MG/KG-DRY	5.00	5.01	100	80-120
06/19/92	CCV*QC*4	99580*CLP90	MERCURY	MG/KG-DRY	5.00	4.83	96.6	80-120

Method Blank Sample Summary

DATE	SAMPLE	STORET	PARAMETER	UNITS	FOUND
06/19/92	MB*QC*1	99580*CLP90	MERCURY	MG/KG-DRY	ND

Laboratory Control Sample Summary

DATE	SAMPLE	STORET	PARAMETER	%RECV	RECV CRIT	UNITS	TARGET	FOUND
06/19/92	LCS*ESE*1	99580*CLP90	MERCURY	101.9	80-120	MG/KG-DRY	0.485	0.494

Sample Matrix Spike Recovery Summary

DATE	SAMPLE	STORET	PARAMETER	%RECV	RECV CRIT	UNSPIKED	UNITS	TARGET	FOUND	RPD
06/19/92	SPM*ALS2B*68	99580*CLP90	MERCURY	102.1	75-125	0.0	MG/KG-DRY	0.570	0.582	

licate Analysis Sample Summary

E	SAMPLE	STORET	PARAMETER	UNITS	REP #1	REP #2	RPD	RPD CRIT
06/19/92	RP*ALS2B*68	99580*CLP90	MERCURY	MG/KG-DRY	<0.120	<0.116	3.39	20

ESE BATCH : G28956

Environmental Science and Engineering Analytical Services
Computer QC Checks

Batch No.: G28956 Analysis Date: 06/19/92 Analyst: MARLENE BANNER

	Yes	"Exceptions" No	Comment / Corrective Action
Analysis holding time within criteria?	X		
Extract holding time within criteria?	X		
No. of calibration standards present acceptable?	X		
Curve correlation coefficient >= 0.995?	X		
Calibration curve y-intercept < curve detection limit?	X		
Sample responses within highest standard response?	X		
ICB present?	X		
ICB within acceptance criteria?	X		
CCB present?	X		
CCB within acceptance criteria?	X		
ICV present?	X		
ICV within acceptance criteria?	X		
CCV present?	X		
CCV within acceptance criteria?	X		
Method blank present?	X		
Method blank within acceptance criteria?	X		
LCS present?	X		
LCS within acceptance criteria?	X		
Sample matrix spike present?	X		
Sample matrix spike within acceptance criteria?	X		
Sample replicate present?	X		
Sample replicate within acceptance criteria?	X		

Note: Any "NO" answer requires a comment.

GFAAMetals: As, Pb, Se, & Tl

ESE BATCH : G28421
CLASSIFICATION : ARSENIC - CLP SOW 3/90

STATUS : FINAL

METHOD BLANK CORRECTION METHOD : NONE

FIELD GRP	PROJECT NUMBER	PROJECT NAME	LAB COORDINATOR
ALS2B	3914042 0201	JMM/ALAMEDA CTO-121	JACKIE HARGROVE-ELLI

SAMPLE CODE	CLIENT ID	DATE ANALYZED	TIME ANALYZED
ALS2B*27	M-BG1		
ALS2B*28	M-BG1		
ALS2B*29	M-BG1		
ALS2B*30	M-BG1		
ALS2B*31	M-BG2		
ALS2B*32	M-BG2		
ALS2B*33	M-BG2		
ALS2B*34	M-BG2		
ALS2B*35	M-BG3		
ALS2B*36	M-BG3		
ALS2B*37	M-BG3		
ALS2B*38	M-BG3		
ALS2B*39	M-BG4		
ALS2B*40	M-BG4		
ALS2B*41	M-BG4		
ALS2B*42	M-BG4		
ALS2B*43	BG-DUP1		
ALS2B*73	B-05HW-02		
ALS2B*74	B-05HW-02		
ALS2B*75	B-05HW-02		
ALS2B*76	B-05HW-02		
ALS2B*77	M-05HW-01		
ALS2B*78	M-05HW-01		
ALS2B*79	M-05HW-01		
ALS2B*80	M-05HW-01		
ALS2B*81	05HW-DUP1		
ALS2B*83	M-05BS-01		
ALS2B*84	M-05BS-01		
ALS2B*85	M-05BS-01		
ALS2B*86	M-05BS-01		

ESE BATCH : G28838
CLASSIFICATION : ARSENIC - CLP SOW 3/90

STATUS : FINAL

METHOD BLANK CORRECTION METHOD : NONE

FLD GRP	PROJECT NUMBER	PROJECT NAME	LAB COORDINATOR
B	3914042 0201	JMM/ALAMEDA CTO-121	JACKIE HARGROVE-ELLI

SAMPLE CODE	CLIENT ID	DATE ANALYZED	TIME ANALYZED
ALS2B*14	W05-01		
ALS2B*15	W05-02		
ALS2B*16	W05-03		
ALS2B*17	W05-04		
ALS2B*44	B-05PS-01		
ALS2B*45	B-05PS-01		
ALS2B*46	B-05PS-01		
ALS2B*48	B-05PS-02		
ALS2B*49	B-05PS-02		
ALS2B*50	B-05PS-03		
ALS2B*52	B-05PS-04		
ALS2B*53	B-05PS-04		
ALS2B*54	B-05PS-05		
ALS2B*55	B-05PS-05		
ALS2B*68	05PS-DUP1		
ALS2B*70	B-05SP-01		
ALS2B*71	B-05WT-01		
ALS2B*72	B-05WT-02		
ALS2B*82	B-05BS-02		

ESE BATCH : G28421

Initial Calibration Blank Summary

DATE	SAMPLE	STORET	PARAMETER	UNITS	FOUND
06/04/92	ICB*QC*1	1003*CLP90	ARSENIC	MG/KG-DRY	0.200

Continuing Calibration Blank Sample Summary

DATE	SAMPLE	STORET	PARAMETER	UNITS	FOUND
06/04/92	CCB*QC*1	1003*CLP90	ARSENIC	MG/KG-DRY	0.200
06/04/92	CCB*QC*2	1003*CLP90	ARSENIC	MG/KG-DRY	ND
06/04/92	CCB*QC*3	1003*CLP90	ARSENIC	MG/KG-DRY	0.300
06/04/92	CCB*QC*4	1003*CLP90	ARSENIC	MG/KG-DRY	0.300
06/04/92	CCB*QC*5	1003*CLP90	ARSENIC	MG/KG-DRY	0.200
06/04/92	CCB*QC*6	1003*CLP90	ARSENIC	MG/KG-DRY	0.500
06/04/92	CCB*QC*7	1003*CLP90	ARSENIC	MG/KG-DRY	0.300
06/04/92	CCB*QC*8	1003*CLP90	ARSENIC	MG/KG-DRY	0.200
06/04/92	CCB*QC*9	1003*CLP90	ARSENIC	MG/KG-DRY	ND
06/04/92	CCB*QC*10	1003*CLP90	ARSENIC	MG/KG-DRY	ND

Initial Calibration Verification Sample Summary

DATE	SAMPLE	STORET	PARAMETER	UNITS	TARGET	FOUND	%RECV	RECV CRIT
06/04/92	ICV*PE-PURE*1	1003*CLP90	ARSENIC	MG/KG-DRY	50.0	52.2	104	90-110

Continuing Calibration Verification Sample Summary

DATE	SAMPLE	STORET	PARAMETER	UNITS	TARGET	FOUND	%RECV	RECV CRIT
06/04/92	CCV*QC*1	1003*CLP90	ARSENIC	MG/KG-DRY	50.0	48.9	97.8	90-110
06/04/92	CCV*QC*2	1003*CLP90	ARSENIC	MG/KG-DRY	50.0	47.8	95.6	90-110
06/04/92	CCV*QC*3	1003*CLP90	ARSENIC	MG/KG-DRY	50.0	47.8	95.6	90-110
06/04/92	CCV*QC*4	1003*CLP90	ARSENIC	MG/KG-DRY	50.0	46.9	93.8	90-110
06/04/92	CCV*QC*5	1003*CLP90	ARSENIC	MG/KG-DRY	50.0	47.2	94.4	90-110
06/04/92	CCV*QC*6	1003*CLP90	ARSENIC	MG/KG-DRY	50.0	48.8	97.6	90-110
06/04/92	CCV*QC*7	1003*CLP90	ARSENIC	MG/KG-DRY	50.0	48.4	96.8	90-110
06/04/92	CCV*QC*8	1003*CLP90	ARSENIC	MG/KG-DRY	50.0	49.5	99.0	90-110
06/04/92	CCV*QC*9	1003*CLP90	ARSENIC	MG/KG-DRY	50.0	48.7	97.4	90-110
06/04/92	CCV*QC*10	1003*CLP90	ARSENIC	MG/KG-DRY	50.0	48.3	96.6	90-110

Method Blank Sample Summary

DATE	SAMPLE	STORET	PARAMETER	UNITS	FOUND
06/04/92	MB*QC*1	1003*CLP90	ARSENIC	MG/KG-DRY	ND
06/04/92	MB*QC*2	1003*CLP90	ARSENIC	MG/KG-DRY	ND

Laboratory Control Sample Summary

DATE	SAMPLE	STORET	PARAMETER	%RECV	RECV CRIT	UNITS	TARGET	FOUND
06/04/92	LCS*ESE*1	1003*CLP90	ARSENIC	95.6	80-120	MG/KG-DRY	7.97	7.62
06/04/92	LCS*ESE*2	1003*CLP90	ARSENIC	97.5	80-120	MG/KG-DRY	7.99	7.79

Sample Matrix Spike Recovery Summary

DATE	SAMPLE	STORET	PARAMETER	%RECV	RECV CRIT	UNSPIKED	UNITS	TARGET	FOUND	RPD
06/04/92	SPM1*ALS2B*43	1003*CLP90	ARSENIC	92.9	75-125	1.23	MG/KG-DRY	9.06	8.42	
06/04/92	SPM1*ALS2B*81	1003*CLP90	ARSENIC	93.5	75-125	1.50	MG/KG-DRY	9.20	8.60	

Replicate Analysis Sample Summary

DATE	SAMPLE	STORET	PARAMETER	UNITS	REP #1	REP #2	RPD	RPD CRIT
06/04/92	RP*ALS2B*43	1003*CLP90	ARSENIC	MG/KG-DRY	1.23	1.04	16.7	20
06/04/92	RP*ALS2B*81	1003*CLP90	ARSENIC	MG/KG-DRY	1.50	1.45	3.39	20

Spike into Matrix Recovery Summary

DATE	SAMPLE	STORET	PARAMETER	%RECV	RECV CRIT	UNITS	TARGET	FOUND
06/04/92	SPX*MB*1	1003*CLP90	ARSENIC	99.6	85-115	MG/KG-DRY	100.0	99.6
06/04/92	SPX*MB*2	1003*CLP90	ARSENIC	95.8	85-115	MG/KG-DRY	100.0	95.8
06/04/92	SPX*ESE*1	1003*CLP90	ARSENIC	92.0	85-115	MG/KG-DRY	19.9	18.3
06/04/92	SPX*ESE*2	1003*CLP90	ARSENIC	96.5	85-115	MG/KG-DRY	20.0	19.3
06/04/92	SPX*ALS2B*27	1003*CLP90	ARSENIC	104.5	85-115	MG/KG-DRY	20.2	21.1
06/04/92	SPX*ALS2B*28	1003*CLP90	ARSENIC	111.2	85-115	MG/KG-DRY	24.2	26.9
06/04/92	SPX*ALS2B*29	1003*CLP90	ARSENIC	102.4	85-115	MG/KG-DRY	29.3	30.0
06/04/92	SPX*ALS2B*30	1003*CLP90	ARSENIC	113.6	85-115	MG/KG-DRY	24.2	27.5
06/04/92	SPX*ALS2B*31	1003*CLP90	ARSENIC	111.1	85-115	MG/KG-DRY	21.6	24.0
06/04/92	SPX*ALS2B*33	1003*CLP90	ARSENIC	98.3	85-115	MG/KG-DRY	23.1	22.7
06/04/92	SPX*ALS2B*34	1003*CLP90	ARSENIC	49.1	85-115	MG/KG-DRY	23.2	11.4
06/04/92	SPX*ALS2B*35	1003*CLP90	ARSENIC	102.6	85-115	MG/KG-DRY	19.3	19.8
06/04/92	SPX*ALS2B*36	1003*CLP90	ARSENIC	112.1	85-115	MG/KG-DRY	21.5	24.1
06/04/92	SPX*ALS2B*37	1003*CLP90	ARSENIC	115.1	85-115	MG/KG-DRY	21.2	24.4
06/04/92	SPX*ALS2B*38	1003*CLP90	ARSENIC	113.2	85-115	MG/KG-DRY	25.0	28.3

EST BATCH : 628421

Spike Into Matrix Recovery Summary

DATE	SAMPLE	STORET	PARAMETER	%RECV	RECV CRIT	UNITS	TARGET	FOUND
06/04/92	SPX*ALS2B*39	1003*CLP90	ARSENIC	99.5	85-115	MG/KG-DRY	20.5	20.4
06/04/92	SPX*ALS2B*40	1003*CLP90	ARSENIC	113.2	85-115	MG/KG-DRY	21.2	24.0
06/04/92	SPX*ALS2B*41	1003*CLP90	ARSENIC	110.6	85-115	MG/KG-DRY	21.7	24.0
06/04/92	SPX*ALS2B*42	1003*CLP90	ARSENIC	112.4	85-115	MG/KG-DRY	22.6	25.4
06/04/92	SPX*ALS2B*43	1003*CLP90	ARSENIC	109.3	85-115	MG/KG-DRY	22.7	24.8
06/04/92	SPX*ALS2BD*43	1003*CLP90	ARSENIC	110.6	85-115	MG/KG-DRY	23.5	26.0
06/04/92	SPX*ALS2B*73	1003*CLP90	ARSENIC	110.8	85-115	MG/KG-DRY	21.2	23.5
06/04/92	SPX*ALS2B*74	1003*CLP90	ARSENIC	110.3	85-115	MG/KG-DRY	21.3	23.5
06/04/92	SPX*ALS2B*75	1003*CLP90	ARSENIC	112.0	85-115	MG/KG-DRY	23.4	26.2
06/04/92	SPX*ALS2B*77	1003*CLP90	ARSENIC	114.2	85-115	MG/KG-DRY	20.4	23.3
06/04/92	SPX*ALS2B*78	1003*CLP90	ARSENIC	113.7	85-115	MG/KG-DRY	24.1	27.4
06/04/92	SPX*ALS2B*79	1003*CLP90	ARSENIC	112.6	85-115	MG/KG-DRY	24.6	27.7
06/04/92	SPX*ALS2B*81	1003*CLP90	ARSENIC	112.8	85-115	MG/KG-DRY	23.5	26.5
06/04/92	SPX*ALS2B*83	1003*CLP90	ARSENIC	113.7	85-115	MG/KG-DRY	20.4	23.2
06/04/92	SPX*ALS2B*84	1003*CLP90	ARSENIC	114.1	85-115	MG/KG-DRY	19.8	22.6
06/04/92	SPX*ALS2B*86	1003*CLP90	ARSENIC	104.7	85-115	MG/KG-DRY	23.3	24.4

ESE BATCH : G28421

Environmental Science and Engineering Analytical Services
Computer QC Checks

Batch No.: G28421 Analysis Date: 06/04/92 Analyst: LULAMAE OSBORNE

	Yes	"Exceptions" No	Comment / Corrective Action
Analysis holding time within criteria?	X		
Extract holding time within criteria?	X		
ICB present?	X		
ICB within acceptance criteria?	X		
CCB present?	X		
CCB within acceptance criteria?	X		
ICV present?	X		
ICV within acceptance criteria?	X		
CCV present?	X		
CCV within acceptance criteria?	X		
Method blank present?	X		
Method blank within acceptance criteria?	X		
LCS present?	X		
LCS within acceptance criteria?	X		
Sample matrix spike present?	X		
Sample matrix spike within acceptance criteria?	X		
Sample replicate present?	X		
Sample replicate within acceptance criteria?	X		
Analytical spike present?	X		
Analytical spike within acceptance criteria?		X	1003*CLP90

Note: Any "NO" answer requires a comment.

OVERRIDE COMMENTS

PROB.:ANALYTICAL SPIKE NOT WITHIN
ACCEPTANCE CRITERIA.
EXPL.:POSSIBLE MATRIX INTERFERENCE./MFB

ESE BATCH : G28838

Initial Calibration Blank Summary

DATE	SAMPLE	STORET	PARAMETER	UNITS	FOUND
06/17/92	ICB*QC*1	1003*CLP90	ARSENIC	MG/KG-DRY	0.300

Continuing Calibration Blank Sample Summary

DATE	SAMPLE	STORET	PARAMETER	UNITS	FOUND
06/17/92	CCB*QC*1	1003*CLP90	ARSENIC	MG/KG-DRY	ND
06/17/92	CCB*QC*2	1003*CLP90	ARSENIC	MG/KG-DRY	ND
06/17/92	CCB*QC*3	1003*CLP90	ARSENIC	MG/KG-DRY	ND
06/17/92	CCB*QC*4	1003*CLP90	ARSENIC	MG/KG-DRY	ND
06/17/92	CCB*QC*5	1003*CLP90	ARSENIC	MG/KG-DRY	ND
06/17/92	CCB*QC*6	1003*CLP90	ARSENIC	MG/KG-DRY	ND

Initial Calibration Verification Sample Summary

DATE	SAMPLE	STORET	PARAMETER	UNITS	TARGET	FOUND	%RECV	RECV CRIT
06/17/92	ICV*PE-PURE*1	1003*CLP90	ARSENIC	MG/KG-DRY	50.0	50.6	101	90-110

Continuing Calibration Verification Sample Summary

DATE	SAMPLE	STORET	PARAMETER	UNITS	TARGET	FOUND	%RECV	RECV CRIT
06/17/92	CCV*QC*1	1003*CLP90	ARSENIC	MG/KG-DRY	50.0	50.8	102	90-110
06/17/92	CCV*QC*2	1003*CLP90	ARSENIC	MG/KG-DRY	50.0	52.1	104	90-110
06/17/92	CCV*QC*3	1003*CLP90	ARSENIC	MG/KG-DRY	50.0	53.5	107	90-110
06/17/92	CCV*QC*4	1003*CLP90	ARSENIC	MG/KG-DRY	50.0	52.6	105	90-110
06/17/92	CCV*QC*5	1003*CLP90	ARSENIC	MG/KG-DRY	50.0	54.9	110	90-110
06/17/92	CCV*QC*6	1003*CLP90	ARSENIC	MG/KG-DRY	50.0	53.9	108	90-110

Method Blank Sample Summary

DATE	SAMPLE	STORET	PARAMETER	UNITS	FOUND
06/17/92	MB*QC*1	1003*CLP90	ARSENIC	MG/KG-DRY	ND
06/17/92	MB*QC*2	1003*CLP90	ARSENIC	MG/KG-DRY	ND

Laboratory Control Sample Summary

DATE	SAMPLE	STORET	PARAMETER	%RECV	RECV CRIT	UNITS	TARGET	FOUND
06/17/92	LCS*ESE*1	1003*CLP90	ARSENIC	105.5	80-120	MG/KG-DRY	7.86	8.29
06/17/92	LCS*ESE*2	1003*CLP90	ARSENIC	107.5	80-120	MG/KG-DRY	7.55	8.12

Sample Matrix Spike Recovery Summary

DATE	SAMPLE	STORET	PARAMETER	%RECV	RECV CRIT	UNSPIKED	UNITS	TARGET	FOUND	RPD
06/17/92	SPM1*ALS2B*68	1003*CLP90	ARSENIC	98.0	75-125	3.10	MG/KG-DRY	9.39	9.20	

Replicate Analysis Sample Summary

DATE	SAMPLE	STORET	PARAMETER	UNITS	REP #1	REP #2	RPD	RPD CRIT
06/17/92	RP*ALS2B*68	1003*CLP90	ARSENIC	MG/KG-DRY	3.10	3.64	16.0	20

Spike into Matrix Recovery Summary

DATE	SAMPLE	STORET	PARAMETER	%RECV	RECV CRIT	UNITS	TARGET	FOUND
06/17/92	SPX*MB*1	1003*CLP90	ARSENIC	106.0	85-115	MG/KG-DRY	100.0	106
06/17/92	SPX*MB*2	1003*CLP90	ARSENIC	108.0	85-115	MG/KG-DRY	100.0	108
06/17/92	SPX*ESE*1	1003*CLP90	ARSENIC	104.1	85-115	MG/KG-DRY	19.6	20.4
06/17/92	SPX*ESE*2	1003*CLP90	ARSENIC	103.2	85-115	MG/KG-DRY	18.9	19.5
06/17/92	SPX*ALS2B*14	1003*CLP90	ARSENIC	109.9	85-115	MG/KG-DRY	111	122
06/17/92	SPX*ALS2B*15	1003*CLP90	ARSENIC	97.6	85-115	MG/KG-DRY	20.5	20.0
06/17/92	SPX*ALS2B*16	1003*CLP90	ARSENIC	103.5	85-115	MG/KG-DRY	22.9	23.7
06/17/92	SPX*ALS2B*17	1003*CLP90	ARSENIC	108.8	85-115	MG/KG-DRY	29.7	32.3
06/17/92	SPX*ALS2B*44	1003*CLP90	ARSENIC	109.9	85-115	MG/KG-DRY	21.3	23.4
06/17/92	SPX*ALS2B*45	1003*CLP90	ARSENIC	109.6	85-115	MG/KG-DRY	23.0	25.2
06/17/92	SPX*ALS2B*46	1003*CLP90	ARSENIC	110.2	85-115	MG/KG-DRY	24.4	26.9
06/17/92	SPX*ALS2B*48	1003*CLP90	ARSENIC	109.8	85-115	MG/KG-DRY	22.5	24.7
06/17/92	SPX*ALS2B*49	1003*CLP90	ARSENIC	114.0	85-115	MG/KG-DRY	22.2	25.3
06/17/92	SPX*ALS2B*50	1003*CLP90	ARSENIC	111.8	85-115	MG/KG-DRY	21.2	23.7
06/17/92	SPX*ALS2B*52	1003*CLP90	ARSENIC	109.9	85-115	MG/KG-DRY	21.2	23.3
06/17/92	SPX*ALS2B*53	1003*CLP90	ARSENIC	107.6	85-115	MG/KG-DRY	22.4	24.1
06/17/92	SPX*ALS2B*54	1003*CLP90	ARSENIC	108.4	85-115	MG/KG-DRY	22.7	24.6
06/17/92	SPX*ALS2B*55	1003*CLP90	ARSENIC	108.4	85-115	MG/KG-DRY	22.7	24.6
06/17/92	SPX*ALS2B*68	1003*CLP90	ARSENIC	109.9	85-115	MG/KG-DRY	24.2	26.6
06/17/92	SPX*ALS2BD*68	1003*CLP90	ARSENIC	113.5	85-115	MG/KG-DRY	22.2	25.2
06/17/92	SPX*ALS2B*70	1003*CLP90	ARSENIC	109.8	85-115	MG/KG-DRY	21.5	23.6
06/17/92	SPX*ALS2B*71	1003*CLP90	ARSENIC	111.1	85-115	MG/KG-DRY	20.8	23.1
06/17/92	SPX*ALS2B*72	1003*CLP90	ARSENIC	109.7	85-115	MG/KG-DRY	23.7	26.0
06/17/92	SPX*ALS2B*82	1003*CLP90	ARSENIC	110.8	85-115	MG/KG-DRY	21.3	23.6

ESE BATCH : G28838

Environmental Science and Engineering Analytical Services
Computer QC Checks

Batch No.: G28838 Analysis Date: 06/17/92 Analyst: LULAMAE OSBORNE

	Yes	"Exceptions" No	Comment / Corrective Action
Analysis holding time within criteria?	X		
Extract holding time within criteria?	X		
ICB present?	X		
ICB within acceptance criteria?	X		
CCB present?	X		
CCB within acceptance criteria?	X		
ICV present?	X		
ICV within acceptance criteria?	X		
CCV present?	X		
CCV within acceptance criteria?	X		
Method blank present?	X		
Method blank within acceptance criteria?	X		
LCS present?	X		
LCS within acceptance criteria?	X		
Sample matrix spike present?	X		
Sample matrix spike within acceptance criteria?	X		
Sample replicate present?	X		
Sample replicate within acceptance criteria?	X		
Analytical spike present?	X		
Analytical spike within acceptance criteria?	X		

Note: Any "NO" answer requires a comment.

OVERRIDE COMMENTS

ESE BATCH : G28845

Initial Calibration Blank Summary

DATE	SAMPLE	STORET	PARAMETER	UNITS	FOUND
06/18/92	ICB*QC*1	1003*CLP90	ARSENIC	MG/KG-DRY	0.700

tinuing Calibration Blank Sample Summary

TE	SAMPLE	STORET	PARAMETER	UNITS	FOUND
06/18/92	CCB*QC*1	1003*CLP90	ARSENIC	MG/KG-DRY	ND
06/18/92	CCB*QC*2	1003*CLP90	ARSENIC	MG/KG-DRY	0.800
06/18/92	CCB*QC*3	1003*CLP90	ARSENIC	MG/KG-DRY	ND

Initial Calibration Verification Sample Summary

DATE	SAMPLE	STORET	PARAMETER	UNITS	TARGET	FOUND	%RECV	RECV CRIT
06/18/92	ICV*PE PURE*1	1003*CLP90	ARSENIC	MG/KG-DRY	50.0	49.3	98.6	90-110

Continuing Calibration Verification Sample Summary

DATE	SAMPLE	STORET	PARAMETER	UNITS	TARGET	FOUND	%RECV	RECV CRIT
06/18/92	CCV*QC*1	1003*CLP90	ARSENIC	MG/KG-DRY	50.0	50.4	101	90-110
06/18/92	CCV*QC*2	1003*CLP90	ARSENIC	MG/KG-DRY	50.0	52.3	105	90-110
06/18/92	CCV*QC*3	1003*CLP90	ARSENIC	MG/KG-DRY	50.0	45.9	91.8	90-110

Method Blank Sample Summary

DATE	SAMPLE	STORET	PARAMETER	UNITS	FOUND
06/18/92	MB*QC*1	1003*CLP90	ARSENIC	MG/KG-DRY	ND

Laboratory Control Sample Summary

DATE	SAMPLE	STORET	PARAMETER	%RECV	RECV CRIT	UNITS	TARGET	FOUND
06/18/92	LCS*ESE*1	1003*CLP90	ARSENIC	100.5	80-120	MG/KG-DRY	8.00	8.04

Sample Matrix Spike Recovery Summary

DATE	SAMPLE	STORET	PARAMETER	%RECV	RECV CRIT	UNSPIKED	UNITS	TARGET	FOUND	RPD
06/18/92	SPM1*ALS2B*1	1003*CLP90	ARSENIC	71.9	75-125	8.98	MG/KG-DRY	7.95	5.72	

Replicate Analysis Sample Summary

	SAMPLE	STORET	PARAMETER	UNITS	REP #1	REP #2	RPD	RPD CRIT
8/92	RP*ALS2B*1	1003*CLP90	ARSENIC	MG/KG-DRY	8.98	7.97	11.9	20

Spike Into Matrix Recovery Summary

DATE	SAMPLE	STORET	PARAMETER	%RECV	RECV CRIT	UNITS	TARGET	FOUND
06/18/92	SPX*MB*1	1003*CLP90	ARSENIC	102.0	85-115	MG/KG-DRY	100.0	102
06/18/92	SPX*ESE*1	1003*CLP90	ARSENIC	103.5	85-115	MG/KG-DRY	20.0	20.7
06/18/92	SPX*ALS2B*1	1003*CLP90	ARSENIC	98.0	85-115	MG/KG-DRY	20.0	19.6
06/18/92	SPX*ALS2BD*1	1003*CLP90	ARSENIC	99.5	85-115	MG/KG-DRY	19.6	19.5
06/18/92	SPX*ALS2B*2	1003*CLP90	ARSENIC	97.0	85-115	MG/KG-DRY	20.2	19.6
06/18/92	SPX*ALS2B*3	1003*CLP90	ARSENIC	99.0	85-115	MG/KG-DRY	20.6	20.4
06/18/92	SPX*ALS2B*4	1003*CLP90	ARSENIC	91.1	85-115	MG/KG-DRY	20.2	18.4

ESE BATCH : G28845
CLASSIFICATION : ARSENIC - CLP SOW 3/90

STATUS : FINAL

METHOD BLANK CORRECTION METHOD : NONE

FIELD GRP	PROJECT NUMBER	PROJECT NAME	LAB COORDINATOR
ALS2B	3914042 0201	JMM/ALAMEDA CTO-121	JACKIE HARGROVE-ELLI

SAMPLE CODE	CLIENT ID	DATE ANALYZED	TIME ANALYZED
ALS2B*1	W04-03		
ALS2B*2	W04-04		
ALS2B*3	W04-05		
ALS2B*4	W04-06		

ESE Batch : G28845

Environmental Science and Engineering Analytical Services
Computer QC Checks

Batch No.: G28845 Analysis Date: 06/18/92 Analyst: PAMELA YOUNG

	Yes	"Exceptions" No	Comment / Corrective Action
Analysis holding time within criteria?	X		
Extract holding time within criteria?	X		
ICB present?	X		
ICB within acceptance criteria?	X		
CCB present?	X		
CCB within acceptance criteria?	X		
ICV present?	X		
ICV within acceptance criteria?	X		
CCV present?	X		
CCV within acceptance criteria?	X		
Method blank present?	X		
Method blank within acceptance criteria?	X		
LCS present?	X		
LCS within acceptance criteria?	X		
Sample matrix spike present?	X		
Sample matrix spike within acceptance criteria?		X	1003*CLP90
Sample replicate present?	X		
Sample replicate within acceptance criteria?	X		
Analytical spike present?	X		
Analytical spike within acceptance criteria?	X		

Note: Any "NO" answer requires a comment.

OVERRIDE COMMENTS

OB.:SAMPLE MATRIX SPIKE NOT WITHIN ACCEPTANCE CRITERIA.
L.:POSSIBLE MATRIX INTERFERENCE./MFB

STD MATRIX SPIKE AND CALIBRATION CHECKS ARE WITHIN CRITERIA. A SLIGHT BIAS MAY BE INDICATED./JMHE

ESE BATCH : G28846
CLASSIFICATION : ARSENIC, WIPE

STATUS : FINAL

METHOD BLANK CORRECTION METHOD : NONE

FIELD GRP	PROJECT NUMBER	PROJECT NAME	LAB COORDINATOR
ALS2B	3914042 0201	JMM/ALAMEDA CTO-121	JACKIE HARGROVE-ELLI

SAMPLE CODE	CLIENT ID	DATE ANALYZED	TIME ANALYZED
ALS2B*18	W05-05		
ALS2B*19	W05-06		
ALS2B*20	W05-07		
ALS2B*21	W05-08		
ALS2B*22	W05-09		
ALS2B*26	W05-DUP		

ESE BATCH : G28846

Initial Calibration Blank Summary

DATE	SAMPLE	STORET	PARAMETER	UNITS	FOUND
06/17/92	ICB*QC*1	99037*GFAA	ARSENIC,TOTAL AS	UG	0.300

tinuing Calibration Blank Sample Summary

DATE	SAMPLE	STORET	PARAMETER	UNITS	FOUND
06/17/92	CCB*QC*1	99037*GFAA	ARSENIC,TOTAL AS	UG	0.400
06/17/92	CCB*QC*7	99037*GFAA	ARSENIC,TOTAL AS	UG	0.800
06/17/92	CCB*QC*8	99037*GFAA	ARSENIC,TOTAL AS	UG	0.700

Initial Calibration Verification Sample Summary

DATE	SAMPLE	STORET	PARAMETER	UNITS	TARGET	FOUND	%RECV	RECV CRIT
06/17/92	ICV*PE-PURE*1	99037*GFAA	ARSENIC,TOTAL AS	UG	50.0	50.6	101	90-110

Continuing Calibration Verification Sample Summary

DATE	SAMPLE	STORET	PARAMETER	UNITS	TARGET	FOUND	%RECV	RECV CRIT
06/17/92	CCV*QC*1	99037*GFAA	ARSENIC,TOTAL AS	UG	50.0	50.8	102	80-120
06/17/92	CCV*QC*7	99037*GFAA	ARSENIC,TOTAL AS	UG	50.0	53.1	106	80-120
06/17/92	CCV*QC*8	99037*GFAA	ARSENIC,TOTAL AS	UG	50.0	53.2	106	80-120

Method Blank Sample Summary

DATE	SAMPLE	STORET	PARAMETER	UNITS	FOUND
06/17/92	MB*QC*1	99037*GFAA	ARSENIC,TOTAL AS	UG	ND
06/17/92	MB*QC*2	99037*GFAA	ARSENIC,TOTAL AS	UG	ND

Standard Matrix Spike Recovery Summary

DATE	SAMPLE	STORET	PARAMETER	%RECV	RECV CRIT	UNITS	TARGET	FOUND
06/17/92	SP1*ESE*1	99037*GFAA	ARSENIC,TOTAL AS	105.5	72-120	UG	7.86	8.29
06/17/92	SP2*ESE*2	99037*GFAA	ARSENIC,TOTAL AS	107.5	72-120	UG	7.55	8.12

Spike Into Matrix Recovery Summary

DATE	SAMPLE	STORET	PARAMETER	%RECV	RECV CRIT	UNITS	TARGET	FOUND
06/17/92	SPX*MB*1	99037*GFAA	ARSENIC,TOTAL AS	106.0	85-115	UG	100.0	106
'17/92	SPX*MB*2	99037*GFAA	ARSENIC,TOTAL AS	108.0	85-115	UG	100.0	108
17/92	SPX*ESE*1	99037*GFAA	ARSENIC,TOTAL AS	104.1	85-115	UG	19.6	20.4
17/92	SPX*ESE*2	99037*GFAA	ARSENIC,TOTAL AS	103.2	85-115	UG	18.9	19.5
06/17/92	SPX*ALS2B*18	99037*GFAA	ARSENIC,TOTAL AS	113.5	85-115	UG	20.0	22.7
06/17/92	SPX*ALS2B*19	99037*GFAA	ARSENIC,TOTAL AS	112.0	85-115	UG	20.0	22.4
06/17/92	SPX*ALS2B*20	99037*GFAA	ARSENIC,TOTAL AS	111.5	85-115	UG	20.0	22.3
06/17/92	SPX*ALS2B*21	99037*GFAA	ARSENIC,TOTAL AS	111.0	85-115	UG	20.0	22.2
06/17/92	SPX*ALS2B*22	99037*GFAA	ARSENIC,TOTAL AS	110.0	85-115	UG	20.0	22.0
06/17/92	SPX*ALS2B*26	99037*GFAA	ARSENIC,TOTAL AS	112.0	85-115	UG	20.0	22.4

ESE BATCH : G28846

Environmental Science and Engineering Analytical Services

Computer QC Checks

Batch No.: G28846 Analysis Date: 06/17/92 Analyst: LULAMAE OSBORNE

	Yes	"Exceptions" No	Comment / Corrective Action
Analysis holding time within criteria?	X		
Extract holding time within criteria?	X		
ICV present?	X		
ICV within acceptance criteria?	X		
CCV present?	X		
CCV within acceptance criteria?	X		
Method blank present?	X		
Method blank within acceptance criteria?	X		
Standard matrix spike present?	X		
Standard matrix spike within acceptance criteria?	X		

Note: Any "NO" answer requires a comment.

ESE BATCH : G28931
CLASSIFICATION : ARSENIC, WIPE

STATUS : FINAL

METHOD BLANK CORRECTION METHOD : NONE

FIELD GRP	PROJECT NUMBER	PROJECT NAME	LAB COORDINATOR
2B	3914042 0201	JMM/ALAMEDA CTO-121	JACKIE HARGROVE-ELLI

SAMPLE CODE	CLIENT ID	DATE ANALYZED	TIME ANALYZED
ALS2B*5	W04-07		
ALS2B*6	W04-08		
ALS2B*7	W04-09		
ALS2B*8	W04-10		
ALS2B*9	W04-11		
ALS2B*10	W04-12		
ALS2B*11	W04-13		
ALS2B*12	W04-14		
ALS2B*13	W04-DUP		
ALS2B*23	W05-10		
ALS2B*24	W05-11		
ALS2B*25	W05-12		

ESE BATCH : G28931

Initial Calibration Blank Summary

DATE	SAMPLE	STORET	PARAMETER	UNITS	FOUND
06/18/92	ICB*QC*1	99037*GFAA	ARSENIC,TOTAL AS	UG	0.400

Continuing Calibration Blank Sample Summary

DATE	SAMPLE	STORET	PARAMETER	UNITS	FOUND
06/18/92	CCB*QC*1	99037*GFAA	ARSENIC,TOTAL AS	UG	0.100
06/18/92	CCB*QC*2	99037*GFAA	ARSENIC,TOTAL AS	UG	ND
06/18/92	CCB*QC*3	99037*GFAA	ARSENIC,TOTAL AS	UG	0.600
06/18/92	CCB*QC*4	99037*GFAA	ARSENIC,TOTAL AS	UG	ND
06/18/92	CCB*QC*5	99037*GFAA	ARSENIC,TOTAL AS	UG	0.300

Initial Calibration Verification Sample Summary

DATE	SAMPLE	STORET	PARAMETER	UNITS	TARGET	FOUND	%RECV	RECV CRIT
06/18/92	ICV*PE PURE*1	99037*GFAA	ARSENIC,TOTAL AS	UG	50.0	47.7	95.4	90-110

Continuing Calibration Verification Sample Summary

DATE	SAMPLE	STORET	PARAMETER	UNITS	TARGET	FOUND	%RECV	RECV CRIT
06/18/92	CCV*QC*1	99037*GFAA	ARSENIC,TOTAL AS	UG	50.0	50.0	100.0	80-120
06/18/92	CCV*QC*2	99037*GFAA	ARSENIC,TOTAL AS	UG	50.0	52.5	105	80-120
06/18/92	CCV*QC*3	99037*GFAA	ARSENIC,TOTAL AS	UG	50.0	52.3	105	80-120
06/18/92	CCV*QC*4	99037*GFAA	ARSENIC,TOTAL AS	UG	50.0	54.0	108	80-120
06/18/92	CCV*QC*5	99037*GFAA	ARSENIC,TOTAL AS	UG	50.0	54.0	108	80-120

Method Blank Sample Summary

DATE	SAMPLE	STORET	PARAMETER	UNITS	FOUND
06/18/92	MB*QC*1	99037*GFAA	ARSENIC,TOTAL AS	UG	ND

Standard Matrix Spike Recovery Summary

DATE	SAMPLE	STORET	PARAMETER	%RECV	RECV CRIT	UNITS	TARGET	FOUND
06/18/92	SP*QC*1	99037*GFAA	ARSENIC,TOTAL AS	91.3	72-120	UG	40.0	36.5

Spike into Matrix Recovery Summary

DATE	SAMPLE	STORET	PARAMETER	%RECV	RECV CRIT	UNITS	TARGET	FOUND
06/18/92	SPX*MB*1	99037*GFAA	ARSENIC,TOTAL AS	95.4	85-115	UG	100.0	95.4
06/18/92	SPX*SP*1	99037*GFAA	ARSENIC,TOTAL AS	96.5	85-115	UG	100.0	96.5
06/18/92	SPX*ALS2B*5	99037*GFAA	ARSENIC,TOTAL AS	105.5	85-115	UG	20.0	21.1
06/18/92	SPX*ALS2B*6	99037*GFAA	ARSENIC,TOTAL AS	107.0	85-115	UG	20.0	21.4
06/18/92	SPX*ALS2B*7	99037*GFAA	ARSENIC,TOTAL AS	107.5	85-115	UG	20.0	21.5
06/18/92	SPX*ALS2B*8	99037*GFAA	ARSENIC,TOTAL AS	105.0	85-115	UG	20.0	21.0
06/18/92	SPX*ALS2B*10	99037*GFAA	ARSENIC,TOTAL AS	94.0	85-115	UG	20.0	18.8
06/18/92	SPX*ALS2B*11	99037*GFAA	ARSENIC,TOTAL AS	94.5	85-115	UG	20.0	18.9
06/18/92	SPX*ALS2B*12	99037*GFAA	ARSENIC,TOTAL AS	97.0	85-115	UG	20.0	19.4
06/18/92	SPX*ALS2B*13	99037*GFAA	ARSENIC,TOTAL AS	107.5	85-115	UG	20.0	21.5
06/18/92	SPX*ALS2B*23	99037*GFAA	ARSENIC,TOTAL AS	101.5	85-115	UG	20.0	20.3
06/18/92	SPX*ALS2B*24	99037*GFAA	ARSENIC,TOTAL AS	95.5	85-115	UG	20.0	19.1
06/18/92	SPX*ALS2B*25	99037*GFAA	ARSENIC,TOTAL AS	100.0	85-115	UG	20.0	20.0

ESE BATCH : G28931

Environmental Science and Engineering Analytical Services
Computer QC Checks

Batch No.: G28931 Analysis Date: 06/18/92 Analyst: CHRISTOPHER HORRELL

	Yes	"Exceptions" No	Comment / Corrective Action
Analysis holding time within criteria?	X		
Extract holding time within criteria?	X		
ICV present?	X		
ICV within acceptance criteria?	X		
CCV present?	X		
CCV within acceptance criteria?	X		
Method blank present?	X		
Method blank within acceptance criteria?	X		
Standard matrix spike present?	X		
Standard matrix spike within acceptance criteria?	X		

Note: Any "NO" answer requires a comment.

OVERRIDE COMMENTS

ESE BATCH : G29070
CLASSIFICATION : ARSENIC - CLP SOW 3/90

STATUS : FINAL

METHOD BLANK CORRECTION METHOD : NONE

FIELD GRP	PROJECT NUMBER	PROJECT NAME	LAB COORDINATOR
ALS2B	3914042 0201	JMM/ALAMEDA CTO-121	JACKIE HARGROVE-ELLI

SAMPLE CODE	CLIENT ID	DATE ANALYZED	TIME ANALYZED
ALS2B*51	B-05PS-03		

ESE BATCH : G29070

Initial Calibration Blank Summary

DATE	SAMPLE	STORET	PARAMETER	UNITS	FOUND
06/23/92	ICB*QC*1	1003*CLP90	ARSENIC	MG/KG-DRY	ND

tinuing Calibration Blank Sample Summary

TE	SAMPLE	STORET	PARAMETER	UNITS	FOUND
06/23/92	CCB*QC*1	1003*CLP90	ARSENIC	MG/KG-DRY	ND
06/23/92	CCB*QC*2	1003*CLP90	ARSENIC	MG/KG-DRY	ND

Initial Calibration Verification Sample Summary

DATE	SAMPLE	STORET	PARAMETER	UNITS	TARGET	FOUND	%RECV	RECV CRIT
06/23/92	ICV*PE-PURE*1	1003*CLP90	ARSENIC	MG/KG-DRY	50.0	50.4	101	90-110

Continuing Calibration Verification Sample Summary

DATE	SAMPLE	STORET	PARAMETER	UNITS	TARGET	FOUND	%RECV	RECV CRIT
06/23/92	CCV*QC*1	1003*CLP90	ARSENIC	MG/KG-DRY	50.0	46.9	93.8	90-110
06/23/92	CCV*QC*2	1003*CLP90	ARSENIC	MG/KG-DRY	50.0	48.7	97.4	90-110

Method Blank Sample Summary

DATE	SAMPLE	STORET	PARAMETER	UNITS	FOUND
06/23/92	MB*QC*1	1003*CLP90	ARSENIC	MG/KG-DRY	ND

Laboratory Control Sample Summary

DATE	SAMPLE	STORET	PARAMETER	%RECV	RECV CRIT	UNITS	TARGET	FOUND
06/23/92	LCS*ESE*1	1003*CLP90	ARSENIC	93.7	80-120	MG/KG-DRY	7.99	7.49

Sample Matrix Spike Recovery Summary

DATE	SAMPLE	STORET	PARAMETER	%RECV	RECV CRIT	UNSPIKED	UNITS	TARGET	FOUND	RPD
06/23/92	SPMI*ALS2B*51	1003*CLP90	ARSENIC	105.3	75-125	1.39	MG/KG-DRY	9.22	9.71	

Replicate Analysis Sample Summary

DATE	SAMPLE	STORET	PARAMETER	UNITS	REP #1	REP #2	RPD	RPD CRIT
'23/92	RP*ALS2B*51	1003*CLP90	ARSENIC	MG/KG-DRY	1.39	1.43	2.84	20

ke into Matrix Recovery Summary

DATE	SAMPLE	STORET	PARAMETER	%RECV	RECV CRIT	UNITS	TARGET	FOUND
06/23/92	SPX*MB*1	1003*CLP90	ARSENIC	100.0	85-115	MG/KG-DRY	100.0	100.0
06/23/92	SPX*ESE*1	1003*CLP90	ARSENIC	111.0	85-115	MG/KG-DRY	20.0	22.2
06/23/92	SPX*ALS2B*51	1003*CLP90	ARSENIC	117.5	85-115	MG/KG-DRY	22.8	26.8
06/23/92	SPX*ALS2BD*51	1003*CLP90	ARSENIC	119.6	85-115	MG/KG-DRY	23.0	27.5

ESE BATCH : G29070

Environmental Science and Engineering Analytical Services
Computer QC Checks

Batch No.: G29070 Analysis Date: 06/23/92 Analyst: GEORGE HOUSTON

	Yes	"Exceptions" No	Comment / Corrective Action
Analysis holding time within criteria?	X		
Extract holding time within criteria?	X		
ICB present?	X		
ICB within acceptance criteria?	X		
CCB present?	X		
CCB within acceptance criteria?	X		
ICV present?	X		
ICV within acceptance criteria?	X		
CCV present?	X		
CCV within acceptance criteria?	X		
Method blank present?	X		
Method blank within acceptance criteria?	X		
LCS present?	X		
LCS within acceptance criteria?	X		
Sample matrix spike present?	X		
Sample matrix spike within acceptance criteria?	X		
Sample replicate present?	X		
Sample replicate within acceptance criteria?	X		
Analytical spike present?	X		
Analytical spike within acceptance criteria?		X	1003*CLP90

Note: Any "NO" answer requires a comment.

OVERRIDE COMMENTS

PROB:ANALYTICAL SPIKE NOT WITHIN
ACCEPTANCE CRITERIA.
EXPL:POSSIBLE MATRIX INTERFERRENCE./MFB/6/25/92

ESE BATCH : G28449
CLASSIFICATION : LEAD - CLP SOW 3/90

STATUS : FINAL

METHOD BLANK CORRECTION METHOD : NONE

FLD GRP	PROJECT NUMBER	PROJECT NAME	LAB COORDINATOR
2B	3914042 0201	JMM/ALAMEDA CTO-121	JACKIE HARGROVE-ELLI

SAMPLE CODE	CLIENT ID	DATE ANALYZED	TIME ANALYZED
ALS2B*27	M-BG1		
ALS2B*28	M-BG1		
ALS2B*29	M-BG1		
ALS2B*30	M-BG1		
ALS2B*31	M-BG2		
ALS2B*32	M-BG2		
ALS2B*33	M-BG2		
ALS2B*34	M-BG2		
ALS2B*35	M-BG3		
ALS2B*36	M-BG3		
ALS2B*37	M-BG3		
ALS2B*38	M-BG3		
ALS2B*39	M-BG4		
ALS2B*40	M-BG4		
ALS2B*41	M-BG4		
ALS2B*42	M-BG4		
ALS2B*43	BG-DUP1		
ALS2B*73	B-05HW-02		
ALS2B*74	B-05HW-02		
ALS2B*75	B-05HW-02		
ALS2B*76	B-05HW-02		
ALS2B*77	M-05HW-01		
ALS2B*78	M-05HW-01		
ALS2B*79	M-05HW-01		
ALS2B*80	M-05HW-01		
ALS2B*81	05HW-DUP1		
ALS2B*83	M-05BS-01		
ALS2B*84	M-05BS-01		
ALS2B*85	M-05BS-01		
ALS2B*86	M-05BS-01		

ESE BATCH : G28449

Initial Calibration Blank Summary

DATE	SAMPLE	STORET	PARAMETER	UNITS	FOUND
06/04/92	ICB*QC*1	1052*CLP90	LEAD	MG/KG-DRY	ND
06/04/92	ICB*QC*2	1052*CLP90	LEAD	MG/KG-DRY	ND

Continuing Calibration Blank Sample Summary

DATE	SAMPLE	STORET	PARAMETER	UNITS	FOUND
06/04/92	CCB*QC*1	1052*CLP90	LEAD	MG/KG-DRY	0.100
06/04/92	CCB*QC*2	1052*CLP90	LEAD	MG/KG-DRY	ND
06/04/92	CCB*QC*3	1052*CLP90	LEAD	MG/KG-DRY	0.100
06/04/92	CCB*QC*4	1052*CLP90	LEAD	MG/KG-DRY	0.300
06/04/92	CCB*QC*5	1052*CLP90	LEAD	MG/KG-DRY	0.300
06/04/92	CCB*QC*6	1052*CLP90	LEAD	MG/KG-DRY	0.300
06/04/92	CCB*QC*7	1052*CLP90	LEAD	MG/KG-DRY	0.300
06/04/92	CCB*QC*8	1052*CLP90	LEAD	MG/KG-DRY	ND
06/04/92	CCB*QC*9	1052*CLP90	LEAD	MG/KG-DRY	0.100
06/04/92	CCB*QC*10	1052*CLP90	LEAD	MG/KG-DRY	0.200
06/04/92	CCB*QC*11	1052*CLP90	LEAD	MG/KG-DRY	ND

Initial Calibration Verification Sample Summary

DATE	SAMPLE	STORET	PARAMETER	UNITS	TARGET	FOUND	%RECV	RECV CRIT
06/04/92	ICV*PE-PURE*1	1052*CLP90	LEAD	MG/KG-DRY	50.0	48.4	96.8	90-110
06/04/92	ICV*PE-PURE*2	1052*CLP90	LEAD	MG/KG-DRY	50.0	50.1	100	90-110

Continuing Calibration Verification Sample Summary

DATE	SAMPLE	STORET	PARAMETER	UNITS	TARGET	FOUND	%RECV	RECV CRIT
06/04/92	CCV*QC*1	1052*CLP90	LEAD	MG/KG-DRY	50.0	52.5	105	90-110
06/04/92	CCV*QC*2	1052*CLP90	LEAD	MG/KG-DRY	50.0	53.6	107	90-110
06/04/92	CCV*QC*3	1052*CLP90	LEAD	MG/KG-DRY	50.0	53.5	107	90-110
06/04/92	CCV*QC*4	1052*CLP90	LEAD	MG/KG-DRY	50.0	53.6	107	90-110
06/04/92	CCV*QC*5	1052*CLP90	LEAD	MG/KG-DRY	50.0	54.7	109	90-110
06/04/92	CCV*QC*6	1052*CLP90	LEAD	MG/KG-DRY	50.0	53.3	107	90-110
06/04/92	CCV*QC*7	1052*CLP90	LEAD	MG/KG-DRY	50.0	54.3	109	90-110
06/04/92	CCV*QC*8	1052*CLP90	LEAD	MG/KG-DRY	50.0	51.2	102	90-110
06/04/92	CCV*QC*9	1052*CLP90	LEAD	MG/KG-DRY	50.0	49.2	98.4	90-110
06/04/92	CCV*QC*10	1052*CLP90	LEAD	MG/KG-DRY	50.0	50.3	101	90-110
06/04/92	CCV*QC*11	1052*CLP90	LEAD	MG/KG-DRY	50.0	52.0	104	90-110

Method Blank Sample Summary

DATE	SAMPLE	STORET	PARAMETER	UNITS	FOUND
06/04/92	MB*QC*1	1052*CLP90	LEAD	MG/KG-DRY	0.100
06/04/92	MB*QC*2	1052*CLP90	LEAD	MG/KG-DRY	ND

Laboratory Control Sample Summary

DATE	SAMPLE	STORET	PARAMETER	%RECV	RECV CRIT	UNITS	TARGET	FOUND
06/04/92	LCS*ESE*1	1052*CLP90	LEAD	109.5	80-120	MG/KG-DRY	3.99	4.37
06/04/92	LCS*ESE*2	1052*CLP90	LEAD	113.0	80-120	MG/KG-DRY	3.99	4.51

Sample Matrix Spike Recovery Summary

DATE	SAMPLE	STORET	PARAMETER	%RECV	RECV CRIT	UNSPIKED	UNITS	TARGET	FOUND	RPD
06/04/92	SPM1*ALS2B*43	1052*CLP90	LEAD	105.5	75-125	6.72	MG/KG-DRY	4.53	4.78	
06/04/92	SPM1*ALS2B*81	1052*CLP90	LEAD	99.1	75-125	2.02	MG/KG-DRY	4.60	4.56	

Replicate Analysis Sample Summary

DATE	SAMPLE	STORET	PARAMETER	UNITS	REP #1	REP #2	RPD	RPD CRIT
06/04/92	RP*ALS2B*43	1052*CLP90	LEAD	MG/KG-DRY	6.72	8.48	23.2	20
06/04/92	RP*ALS2B*81	1052*CLP90	LEAD	MG/KG-DRY	2.02	2.16	6.70	20

Spike into Matrix Recovery Summary

DATE	SAMPLE	STORET	PARAMETER	%RECV	RECV CRIT	UNITS	TARGET	FOUND
06/04/92	SPX*MB*1	1052*CLP90	LEAD	106.0	85-115	MG/KG-DRY	100.0	106
06/04/92	SPX*MB*2	1052*CLP90	LEAD	103.0	85-115	MG/KG-DRY	100.0	103
06/04/92	SPX*ESE*1	1052*CLP90	LEAD	103.0	85-115	MG/KG-DRY	19.9	20.5
06/04/92	SPX*ESE*2	1052*CLP90	LEAD	104.5	85-115	MG/KG-DRY	20.0	20.9
06/04/92	SPX*ALS2B*27	1052*CLP90	LEAD	99.5	85-115	MG/KG-DRY	20.2	20.1
06/04/92	SPX*ALS2B*28	1052*CLP90	LEAD	99.2	85-115	MG/KG-DRY	24.2	24.0
06/04/92	SPX*ALS2B*29	1052*CLP90	LEAD	100.7	85-115	MG/KG-DRY	29.3	29.5
06/04/92	SPX*ALS2B*30	1052*CLP90	LEAD	94.6	85-115	MG/KG-DRY	24.2	22.9
06/04/92	SPX*ALS2B*31	1052*CLP90	LEAD	94.9	85-115	MG/KG-DRY	21.6	20.5
06/04/92	SPX*ALS2B*32	1052*CLP90	LEAD	98.0	85-115	MG/KG-DRY	20.0	19.6
06/04/92	SPX*ALS2B*33	1052*CLP90	LEAD	90.0	85-115	MG/KG-DRY	23.1	20.8

ESE BATCH : G28449

Spike Into Matrix Recovery Summary

DATE	SAMPLE	STORET	PARAMETER	%RECV	RECV CRIT	UNITS	TARGET	FOUND
06/04/92	SPX*ALS2B*34	1052*CLP90	LEAD	104.7	85-115	MG/KG-DRY	23.2	24.3
06/04/92	SPX*ALS2B*35	1052*CLP90	LEAD	99.0	85-115	MG/KG-DRY	19.3	19.1
06/04/92	SPX*ALS2B*36	1052*CLP90	LEAD	105.6	85-115	MG/KG-DRY	21.5	22.7
06/04/92	SPX*ALS2B*37	1052*CLP90	LEAD	101.4	85-115	MG/KG-DRY	21.2	21.5
06/04/92	SPX*ALS2B*38	1052*CLP90	LEAD	98.4	85-115	MG/KG-DRY	25.0	24.6
06/04/92	SPX*ALS2B*39	1052*CLP90	LEAD	107.3	85-115	MG/KG-DRY	20.5	22.0
06/04/92	SPX*ALS2B*40	1052*CLP90	LEAD	104.2	85-115	MG/KG-DRY	21.2	22.1
06/04/92	SPX*ALS2B*41	1052*CLP90	LEAD	102.3	85-115	MG/KG-DRY	21.7	22.2
06/04/92	SPX*ALS2B*42	1052*CLP90	LEAD	105.3	85-115	MG/KG-DRY	22.6	23.8
06/04/92	SPX*ALS2B*43	1052*CLP90	LEAD	100.0	85-115	MG/KG-DRY	22.7	22.7
06/04/92	SPX*ALS2BD*43	1052*CLP90	LEAD	101.3	85-115	MG/KG-DRY	23.5	23.8
06/04/92	SPX*ALS2B*73	1052*CLP90	LEAD	101.9	85-115	MG/KG-DRY	21.2	21.6
06/04/92	SPX*ALS2B*74	1052*CLP90	LEAD	108.5	85-115	MG/KG-DRY	21.3	23.1
06/04/92	SPX*ALS2B*75	1052*CLP90	LEAD	103.4	85-115	MG/KG-DRY	23.4	24.2
06/04/92	SPX*ALS2B*76	1052*CLP90	LEAD	93.3	85-115	MG/KG-DRY	22.4	20.9
06/04/92	SPX*ALS2B*77	1052*CLP90	LEAD	111.3	85-115	MG/KG-DRY	20.4	22.7
06/04/92	SPX*ALS2B*78	1052*CLP90	LEAD	104.1	85-115	MG/KG-DRY	24.1	25.1
06/04/92	SPX*ALS2B*79	1052*CLP90	LEAD	103.7	85-115	MG/KG-DRY	24.6	25.5
06/04/92	SPX*ALS2B*80	1052*CLP90	LEAD	108.4	85-115	MG/KG-DRY	23.8	25.8
06/04/92	SPX*ALS2B*81	1052*CLP90	LEAD	101.3	85-115	MG/KG-DRY	23.5	23.8
06/04/92	SPX*ALS2BD*81	1052*CLP90	LEAD	98.7	85-115	MG/KG-DRY	23.4	23.1
06/04/92	SPX*ALS2B*83	1052*CLP90	LEAD	100.0	85-115	MG/KG-DRY	20.4	20.4
06/04/92	SPX*ALS2B*84	1052*CLP90	LEAD	97.5	85-115	MG/KG-DRY	19.8	19.3
06/04/92	SPX*ALS2B*85	1052*CLP90	LEAD	100.0	85-115	MG/KG-DRY	21.6	21.6
06/04/92	SPX*ALS2B*86	1052*CLP90	LEAD	97.9	85-115	MG/KG-DRY	23.3	22.8

ESE BATCH : G28449

Environmental Science and Engineering Analytical Services

Computer QC Checks

Batch No.: G28449 Analysis Date: 06/04/92 Analyst: CHRISTOPHER HORRELL

	Yes	"Exceptions" No	Comment / Corrective Action
Analysis holding time within criteria?	X		
Extract holding time within criteria?	X		
ICB present?	X		
ICB within acceptance criteria?	X		
CCB present?	X		
CCB within acceptance criteria?	X		
ICV present?	X		
ICV within acceptance criteria?	X		
CCV present?	X		
CCV within acceptance criteria?	X		
Method blank present?	X		
Method blank within acceptance criteria?	X		
LCS present?	X		
LCS within acceptance criteria?	X		
Sample matrix spike present?	X		
Sample matrix spike within acceptance criteria?	X		
Sample matrix spike duplicate present?		X	
Sample matrix spike duplicate within acceptance criteria?			
Sample replicate present?	X		
Sample replicate within acceptance criteria?		X	
Analytical spike present?	X		
Analytical spike within acceptance criteria?	X		

Note: Any "NO" answer requires a comment.

OVERRIDE COMMENTS

PROB:SAMPLE REPLICATE NOT WITHIN
ACCEPTANCE CRITERIA.
EXPL:ERRATIC RESULTS POSSIBLY DUE
TO THE NON-HOMOGENEITY OF THE
SAMPLE. MFB 6/12/92
STANDARD MATRIX SPIKES, CALIBRATION CHECKS ARE WITHIN CRITERIA.
SLIGHTLY ELEVATED RPD DOES NOT HAVE IMPACT ON DATA QUALITY./JMHE

ESE BATCH : G28852
CLASSIFICATION : LEAD - CLP SOW 3/90

STATUS : FINAL

METHOD BLANK CORRECTION METHOD : NONE

FIELD GRP	PROJECT NUMBER	PROJECT NAME	LAB COORDINATOR
2B	3914042 0201	JMM/ALAMEDA CTO-121	JACKIE HARGROVE-ELLI

SAMPLE CODE	CLIENT ID	DATE ANALYZED	TIME ANALYZED
ALS2B*44	B-05PS-01		
ALS2B*45	B-05PS-01		
ALS2B*46	B-05PS-01		
ALS2B*48	B-05PS-02		
ALS2B*49	B-05PS-02		
ALS2B*50	B-05PS-03		
ALS2B*52	B-05PS-04		
ALS2B*53	B-05PS-04		
ALS2B*54	B-05PS-05		
ALS2B*55	B-05PS-05		
ALS2B*68	05PS-DUP1		
ALS2B*70	B-05SP-01		
ALS2B*71	B-05WT-01		
ALS2B*72	B-05WT-02		
ALS2B*82	B-05BS-02		

ESE BATCH : G28852

Initial Calibration Blank Summary

DATE	SAMPLE	STORET	PARAMETER	UNITS	FOUND
06/17/92	ICB*QC*1	1052*CLP90	LEAD	MG/KG-DRY	0.100

Continuing Calibration Blank Sample Summary

DATE	SAMPLE	STORET	PARAMETER	UNITS	FOUND
06/17/92	CCB*QC*1	1052*CLP90	LEAD	MG/KG-DRY	ND
06/17/92	CCB*QC*2	1052*CLP90	LEAD	MG/KG-DRY	ND
06/17/92	CCB*QC*3	1052*CLP90	LEAD	MG/KG-DRY	ND
06/17/92	CCB*QC*4	1052*CLP90	LEAD	MG/KG-DRY	ND
06/17/92	CCB*QC*5	1052*CLP90	LEAD	MG/KG-DRY	ND
06/17/92	CCB*QC*6	1052*CLP90	LEAD	MG/KG-DRY	ND

Initial Calibration Verification Sample Summary

DATE	SAMPLE	STORET	PARAMETER	UNITS	TARGET	FOUND	%RECV	RECV CRIT
06/17/92	ICV*PE-PURE*1	1052*CLP90	LEAD	MG/KG-DRY	50.0	49.7	99.4	90-110

Continuing Calibration Verification Sample Summary

DATE	SAMPLE	STORET	PARAMETER	UNITS	TARGET	FOUND	%RECV	RECV CRIT
06/17/92	CCV*QC*1	1052*CLP90	LEAD	MG/KG-DRY	50.0	51.0	102	90-110
06/17/92	CCV*QC*2	1052*CLP90	LEAD	MG/KG-DRY	50.0	52.2	104	90-110
06/17/92	CCV*QC*3	1052*CLP90	LEAD	MG/KG-DRY	50.0	52.7	105	90-110
06/17/92	CCV*QC*4	1052*CLP90	LEAD	MG/KG-DRY	50.0	53.3	107	90-110
06/17/92	CCV*QC*5	1052*CLP90	LEAD	MG/KG-DRY	50.0	53.2	106	90-110
06/17/92	CCV*QC*6	1052*CLP90	LEAD	MG/KG-DRY	50.0	52.6	105	90-110

Method Blank Sample Summary

DATE	SAMPLE	STORET	PARAMETER	UNITS	FOUND
06/17/92	MB*QC*1	1052*CLP90	LEAD	MG/KG-DRY	ND
06/17/92	MB*QC*2	1052*CLP90	LEAD	MG/KG-DRY	ND

Laboratory Control Sample Summary

DATE	SAMPLE	STORET	PARAMETER	%RECV	RECV CRIT	UNITS	TARGET	FOUND
06/17/92	LCS*ESE*1	1052*CLP90	LEAD	100.5	80-120	MG/KG-DRY	3.93	3.95
06/17/92	LCS*ESE*2	1052*CLP90	LEAD	102.9	80-120	MG/KG-DRY	3.78	3.89

Sample Matrix Spike Recovery Summary

DATE	SAMPLE	STORET	PARAMETER	%RECV	RECV CRIT	UNSPIKED	UNITS	TARGET	FOUND	RPD
06/17/92	SPM1*ALS2B*68	1052*CLP90	LEAD	68.7	75-125	3.20	MG/KG-DRY	4.70	3.23	

Replicate Analysis Sample Summary

DATE	SAMPLE	STORET	PARAMETER	UNITS	REP #1	REP #2	RPD	RPD CRIT
06/17/92	RP*ALS2B*68	1052*CLP90	LEAD	MG/KG-DRY	3.20	2.60	20.7	20

Spike into Matrix Recovery Summary

DATE	SAMPLE	STORET	PARAMETER	%RECV	RECV CRIT	UNITS	TARGET	FOUND
06/17/92	SPX*MB*1	1052*CLP90	LEAD	103.0	85-115	MG/KG-DRY	100.0	103
06/17/92	SPX*MB*2	1052*CLP90	LEAD	104.0	85-115	MG/KG-DRY	100.0	104
06/17/92	SPX*ESE*1	1052*CLP90	LEAD	104.6	85-115	MG/KG-DRY	19.6	20.5
06/17/92	SPX*ESE*2	1052*CLP90	LEAD	102.6	85-115	MG/KG-DRY	18.9	19.4
06/17/92	SPX*ALS2BD*44	1052*CLP90	LEAD	107.5	85-115	MG/KG-DRY	21.3	22.9
06/17/92	SPX*ALS2B*45	1052*CLP90	LEAD	100.0	85-115	MG/KG-DRY	23.0	23.0
06/17/92	SPX*ALS2B*46	1052*CLP90	LEAD	92.2	85-115	MG/KG-DRY	24.4	22.5
06/17/92	SPX*ALS2B*48	1052*CLP90	LEAD	106.7	85-115	MG/KG-DRY	22.5	24.0
06/17/92	SPX*ALS2B*49	1052*CLP90	LEAD	100.0	85-115	MG/KG-DRY	22.2	22.2
06/17/92	SPX*ALS2B*50	1052*CLP90	LEAD	107.1	85-115	MG/KG-DRY	21.2	22.7
06/17/92	SPX*ALS2B*52	1052*CLP90	LEAD	106.1	85-115	MG/KG-DRY	21.2	22.5
06/17/92	SPX*ALS2B*53	1052*CLP90	LEAD	106.3	85-115	MG/KG-DRY	22.4	23.8
06/17/92	SPX*ALS2BD*54	1052*CLP90	LEAD	108.8	85-115	MG/KG-DRY	22.7	24.7
06/17/92	SPX*ALS2B*55	1052*CLP90	LEAD	105.7	85-115	MG/KG-DRY	22.7	24.0
06/17/92	SPX*ALS2B*68	1052*CLP90	LEAD	92.6	85-115	MG/KG-DRY	24.2	22.4
06/17/92	SPX*ALS2BD*68	1052*CLP90	LEAD	102.3	85-115	MG/KG-DRY	22.2	22.7
06/17/92	SPX*ALS2B*70	1052*CLP90	LEAD	107.9	85-115	MG/KG-DRY	21.5	23.2
06/17/92	SPX*ALS2BD*71	1052*CLP90	LEAD	108.7	85-115	MG/KG-DRY	20.8	22.6
06/17/92	SPX*ALS2B*72	1052*CLP90	LEAD	109.7	85-115	MG/KG-DRY	23.7	26.0
06/17/92	SPX*ALS2B*82	1052*CLP90	LEAD	108.0	85-115	MG/KG-DRY	21.3	23.0

ESE BATCH : G28852

Environmental Science and Engineering Analytical Services

Computer QC Checks

Batch No.: G28852 Analysis Date: 06/17/92 Analyst: GEORGE HOUSTON

	Yes	"Exceptions" No	Comment / Corrective Action
Analysis holding time within criteria?	X		
Extract holding time within criteria?	X		
ICB present?	X		
ICB within acceptance criteria?	X		
CCB present?	X		
CCB within acceptance criteria?	X		
ICV present?	X		
ICV within acceptance criteria?	X		
CCV present?	X		
CCV within acceptance criteria?	X		
Method blank present?	X		
Method blank within acceptance criteria?	X		
LCS present?	X		
LCS within acceptance criteria?	X		
Sample matrix spike present?	X		
Sample matrix spike within acceptance criteria?		X	1052*CLP90
Sample replicate present?	X		
Sample replicate within acceptance criteria?		X	1052*CLP90
Analytical spike present?	X		
Analytical spike within acceptance criteria?	X		

Note: Any "NO" answer requires a comment.

OVERRIDE COMMENTS

RPD.:SAMPLE REPLICATE NOT WITHIN ACCEPTANCE CRITERIA.
.:THE DIFFERENCE BETWEEN THE SAMPLE AND IT'S DUPLICATE IS SMALL. THE CONCENTRATION OF THE SAMPLE IS LOW./MFB

PROB.:SAMPLE MATRIX SPIKE NOT WITHIN ACCEPTANCE CRITERIA.
EXPL.:POSSIBLE MATRIX INTERFERENCE./MFB

STD. MATRIX SPIKE AND CALIBRATION CHECKS ARE WITHIN CRITERIA. THE SPM RECOVERY AND RPD INDICATE POSSIBLE MATRIX INTERFERENCES./JMHE
SAMPLES NOT RUN BY FURNACE WERE PICKED UP BY ICAP DUE TO HIGH CONCENTRATION. BATCH G28709./KWB

ESE BATCH : G29067
CLASSIFICATION : LEAD - CLP SOW 3/90

STATUS : FINAL

METHOD BLANK CORRECTION METHOD : NONE

FIELD GRP	PROJECT NUMBER	PROJECT NAME	LAB COORDINATOR
ALS2B	3914042 0201	JMM/ALAMEDA CTO-121	JACKIE HARGROVE-ELLI

SAMPLE CODE	CLIENT ID	DATE ANALYZED	TIME ANALYZED
ALS2B*51	B-05PS-03		

ESE BATCH : G29067

Initial Calibration Blank Summary

DATE	SAMPLE	STORET	PARAMETER	UNITS	FOUND
06/23/92	ICB*QC*1	1052*CLP90	LEAD	MG/KG-DRY	0.200

tinuing Calibration Blank Sample Summary

TE	SAMPLE	STORET	PARAMETER	UNITS	FOUND
06/23/92	CCB*QC*1	1052*CLP90	LEAD	MG/KG-DRY	0.200
06/23/92	CCB*QC*2	1052*CLP90	LEAD	MG/KG-DRY	0.300

Initial Calibration Verification Sample Summary

DATE	SAMPLE	STORET	PARAMETER	UNITS	TARGET	FOUND	%RECV	RECV CRIT
06/23/92	ICV*PE PURE*1	1052*CLP90	LEAD	MG/KG-DRY	50.0	53.5	107	90-110

Continuing Calibration Verification Sample Summary

DATE	SAMPLE	STORET	PARAMETER	UNITS	TARGET	FOUND	%RECV	RECV CRIT
06/23/92	CCV*QC*1	1052*CLP90	LEAD	MG/KG-DRY	50.0	53.8	108	90-110
06/23/92	CCV*QC*2	1052*CLP90	LEAD	MG/KG-DRY	50.0	53.8	108	90-110

Method Blank Sample Summary

DATE	SAMPLE	STORET	PARAMETER	UNITS	FOUND
06/23/92	MB*QC*1	1052*CLP90	LEAD	MG/KG-DRY	0.400

Laboratory Control Sample Summary

DATE	SAMPLE	STORET	PARAMETER	%RECV	RECV CRIT	UNITS	TARGET	FOUND
06/23/92	LCS*ESE*1	1052*CLP90	LEAD	115.0	80-120	MG/KG-DRY	4.00	4.60

Sample Matrix Spike Recovery Summary

DATE	SAMPLE	STORET	PARAMETER	%RECV	RECV CRIT	UNSPIKED	UNITS	TARGET	FOUND	RPD
06/23/92	SPM1*ALS2B*51	1052*CLP90	LEAD	99.1	75-125	2.71	MG/KG-DRY	4.61	4.57	

Replicate Analysis Sample Summary

DATE	SAMPLE	STORET	PARAMETER	UNITS	REP #1	REP #2	RPD	RPD CRIT
23/92	RP*ALS2B*51	1052*CLP90	LEAD	MG/KG-DRY	2.71	2.55	6.08	20

ke into Matrix Recovery Summary

DATE	SAMPLE	STORET	PARAMETER	%RECV	RECV CRIT	UNITS	TARGET	FOUND
06/23/92	SPX*MB*1	1052*CLP90	LEAD	109.0	85-115	MG/KG-DRY	100.0	109
06/23/92	SPX*ESE*1	1052*CLP90	LEAD	107.0	85-115	MG/KG-DRY	20.0	21.4
06/23/92	SPX*ALS2B*51	1052*CLP90	LEAD	106.6	85-115	MG/KG-DRY	22.8	24.3
06/23/92	SPX*ALS2BD*51	1052*CLP90	LEAD	103.6	85-115	MG/KG-DRY	19.6	20.3

ESE BATCH : G29067

Environmental Science and Engineering Analytical Services
Computer QC Checks

Batch No.: G29067 Analysis Date: 06/23/92 Analyst: ELIZABETH CREARY

		"Exceptions"	
	Yes	No	Comment / Corrective Action
Analysis holding time within criteria?	X		
Extract holding time within criteria?	X		
ICB present?	X		
ICB within acceptance criteria?	X		
CCB present?	X		
CCB within acceptance criteria?	X		
ICV present?	X		
ICV within acceptance criteria?	X		
CCV present?	X		
CCV within acceptance criteria?	X		
Method blank present?	X		
Method blank within acceptance criteria?	X		
LCS present?	X		
LCS within acceptance criteria?	X		
Sample matrix spike present?	X		
Sample matrix spike within acceptance criteria?	X		
Sample replicate present?	X		
Sample replicate within acceptance criteria?	X		
Analytical spike present?	X		
Analytical spike within acceptance criteria?	X		

Note: Any "NO" answer requires a comment.

ESE BATCH : G28419
CLASSIFICATION : SELENIUM - CLP SOW 3/90

STATUS : FINAL

METHOD BLANK CORRECTION METHOD : NONE

'ELD GRP	PROJECT NUMBER	PROJECT NAME	LAB COORDINATOR
2B	3914042 0201	JMM/ALAMEDA CTO-121	JACKIE HARGROVE-ELLI

SAMPLE CODE	CLIENT ID	DATE ANALYZED	TIME ANALYZED
ALS2B*27	M-BG1		
ALS2B*28	M-BG1		
ALS2B*29	M-BG1		
ALS2B*30	M-BG1		
ALS2B*31	M-BG2		
ALS2B*32	M-BG2		
ALS2B*33	M-BG2		
ALS2B*34	M-BG2		
ALS2B*35	M-BG3		
ALS2B*36	M-BG3		
ALS2B*37	M-BG3		
ALS2B*38	M-BG3		
ALS2B*39	M-BG4		
ALS2B*40	M-BG4		
ALS2B*41	M-BG4		
ALS2B*42	M-BG4		
ALS2B*43	BG-DUP1		
ALS2B*73	B-05HW-02		
ALS2B*74	B-05HW-02		
ALS2B*75	B-05HW-02		
ALS2B*76	B-05HW-02		
ALS2B*77	M-05HW-01		
ALS2B*78	M-05HW-01		
ALS2B*79	M-05HW-01		
ALS2B*80	M-05HW-01		
ALS2B*81	05HW-DUP1		
ALS2B*83	M-05BS-01		
ALS2B*84	M-05BS-01		
ALS2B*85	M-05BS-01		
ALS2B*86	M-05BS-01		

ESE BATCH : G28419

Initial Calibration Blank Summary

DATE	SAMPLE	STORET	PARAMETER	UNITS	FOUND
06/03/92	ICB*QC*1	1148*CLP90	SELENIUM	MG/KG-DRY	ND

Continuing Calibration Blank Sample Summary

DATE	SAMPLE	STORET	PARAMETER	UNITS	FOUND
06/03/92	CCB*QC*1	1148*CLP90	SELENIUM	MG/KG-DRY	ND
06/03/92	CCB*QC*2	1148*CLP90	SELENIUM	MG/KG-DRY	ND
06/03/92	CCB*QC*3	1148*CLP90	SELENIUM	MG/KG-DRY	ND
06/03/92	CCB*QC*4	1148*CLP90	SELENIUM	MG/KG-DRY	ND
06/03/92	CCB*QC*5	1148*CLP90	SELENIUM	MG/KG-DRY	ND
06/03/92	CCB*QC*6	1148*CLP90	SELENIUM	MG/KG-DRY	ND
06/03/92	CCB*QC*7	1148*CLP90	SELENIUM	MG/KG-DRY	ND
06/03/92	CCB*QC*8	1148*CLP90	SELENIUM	MG/KG-DRY	ND

Initial Calibration Verification Sample Summary

DATE	SAMPLE	STORET	PARAMETER	UNITS	TARGET	FOUND	%RECV	RECV CRIT
06/03/92	ICV*PE-PURE*1	1148*CLP90	SELENIUM	MG/KG-DRY	25.0	26.6	106	90-110

Continuing Calibration Verification Sample Summary

DATE	SAMPLE	STORET	PARAMETER	UNITS	TARGET	FOUND	%RECV	RECV CRIT
06/03/92	CCV*QC*1	1148*CLP90	SELENIUM	MG/KG-DRY	50.0	52.9	106	90-110
06/03/92	CCV*QC*2	1148*CLP90	SELENIUM	MG/KG-DRY	50.0	52.7	105	90-110
06/03/92	CCV*QC*3	1148*CLP90	SELENIUM	MG/KG-DRY	50.0	53.1	106	90-110
06/03/92	CCV*QC*4	1148*CLP90	SELENIUM	MG/KG-DRY	50.0	52.7	105	90-110
06/03/92	CCV*QC*5	1148*CLP90	SELENIUM	MG/KG-DRY	50.0	52.5	105	90-110
06/03/92	CCV*QC*6	1148*CLP90	SELENIUM	MG/KG-DRY	50.0	52.5	105	90-110
06/03/92	CCV*QC*7	1148*CLP90	SELENIUM	MG/KG-DRY	50.0	48.4	96.8	90-110
06/03/92	CCV*QC*8	1148*CLP90	SELENIUM	MG/KG-DRY	50.0	48.1	96.2	90-110

Method Blank Sample Summary

DATE	SAMPLE	STORET	PARAMETER	UNITS	FOUND
06/03/92	MB*QC*1	1148*CLP90	SELENIUM	MG/KG-DRY	ND
06/03/92	MB*QC*2	1148*CLP90	SELENIUM	MG/KG-DRY	ND

Laboratory Control Sample Summary

DATE	SAMPLE	STORET	PARAMETER	%RECV	RECV CRIT	UNITS	TARGET	FOUND
06/03/92	LCS*ESE*1	1148*CLP90	SELENIUM	103.0	80-120	MG/KG-DRY	1.99	2.05
06/03/92	LCS*ESE*2	1148*CLP90	SELENIUM	103.0	80-120	MG/KG-DRY	2.00	2.06

Sample Matrix Spike Recovery Summary

DATE	SAMPLE	STORET	PARAMETER	%RECV	RECV CRIT	UNSPIKED	UNITS	TARGET	FOUND	RPD
06/03/92	SPM1*ALS2B*43	1148*CLP90	SELENIUM	86.8	75-125	0.0	MG/KG-DRY	2.27	1.97	
06/03/92	SPM1*ALS2B*81	1148*CLP90	SELENIUM	76.1	75-125	0.0	MG/KG-DRY	2.30	1.75	

Replicate Analysis Sample Summary

DATE	SAMPLE	STORET	PARAMETER	UNITS	REP #1	REP #2	RPD	RPD CRIT
06/03/92	RP*ALS2B*43	1148*CLP90	SELENIUM	MG/KG-DRY	<0.454	<0.471	3.68	20
06/03/92	RP*ALS2B*81	1148*CLP90	SELENIUM	MG/KG-DRY	<0.469	<0.468	0.213	20

Spike into Matrix Recovery Summary

DATE	SAMPLE	STORET	PARAMETER	%RECV	RECV CRIT	UNITS	TARGET	FOUND
06/03/92	SPX*MB*1	1148*CLP90	SELENIUM	105.0	85-115	MG/KG-DRY	100.0	105
06/03/92	SPX*MB*2	1148*CLP90	SELENIUM	104.0	85-115	MG/KG-DRY	100.0	104
06/03/92	SPX*ESE*1	1148*CLP90	SELENIUM	113.6	85-115	MG/KG-DRY	19.9	22.6
06/03/92	SPX*ESE*2	1148*CLP90	SELENIUM	113.5	85-115	MG/KG-DRY	20.0	22.7
06/03/92	SPX*ALS2B*27	1148*CLP90	SELENIUM	100.0	85-115	MG/KG-DRY	20.2	20.2
06/03/92	SPX*ALS2B*28	1148*CLP90	SELENIUM	101.2	85-115	MG/KG-DRY	24.2	24.5
06/03/92	SPX*ALS2B*29	1148*CLP90	SELENIUM	95.9	85-115	MG/KG-DRY	29.3	28.1
06/03/92	SPX*ALS2B*30	1148*CLP90	SELENIUM	100.8	85-115	MG/KG-DRY	24.2	24.4
06/03/92	SPX*ALS2B*31	1148*CLP90	SELENIUM	103.2	85-115	MG/KG-DRY	21.6	22.3
06/03/92	SPX*ALS2B*32	1148*CLP90	SELENIUM	105.5	85-115	MG/KG-DRY	20.0	21.1
06/03/92	SPX*ALS2B*33	1148*CLP90	SELENIUM	99.6	85-115	MG/KG-DRY	23.1	23.0
06/03/92	SPX*ALS2B*34	1148*CLP90	SELENIUM	53.0	85-115	MG/KG-DRY	23.2	12.3
06/03/92	SPX*ALS2B*35	1148*CLP90	SELENIUM	101.6	85-115	MG/KG-DRY	19.3	19.6
06/03/92	SPX*ALS2B*36	1148*CLP90	SELENIUM	106.0	85-115	MG/KG-DRY	21.5	22.8
06/03/92	SPX*ALS2B*37	1148*CLP90	SELENIUM	100.0	85-115	MG/KG-DRY	21.2	21.2
06/03/92	SPX*ALS2B*38	1148*CLP90	SELENIUM	101.6	85-115	MG/KG-DRY	25.0	25.4
06/03/92	SPX*ALS2B*39	1148*CLP90	SELENIUM	97.6	85-115	MG/KG-DRY	20.5	20.0
06/03/92	SPX*ALS2B*40	1148*CLP90	SELENIUM	97.6	85-115	MG/KG-DRY	21.2	20.7
06/03/92	SPX*ALS2B*41	1148*CLP90	SELENIUM	99.1	85-115	MG/KG-DRY	21.7	21.5

ESE BATCH : 628419

Spike into Matrix Recovery Summary

DATE	SAMPLE	STORET	PARAMETER	%RECV	RECV CRIT	UNITS	TARGET	FOUND
06/03/92	SPX*ALS2B*42	1148*CLP90	SELENIUM	99.6	85-115	MG/KG-DRY	22.6	22.5
06/03/92	SPX*ALS2B*43	1148*CLP90	SELENIUM	102.2	85-115	MG/KG-DRY	22.7	23.2
06/03/92	SPX*ALS2BD*43	1148*CLP90	SELENIUM	101.3	85-115	MG/KG-DRY	23.5	23.8
06/03/92	SPX*ALS2B*73	1148*CLP90	SELENIUM	98.1	85-115	MG/KG-DRY	21.2	20.8
06/03/92	SPX*ALS2B*74	1148*CLP90	SELENIUM	94.8	85-115	MG/KG-DRY	21.3	20.2
06/03/92	SPX*ALS2B*75	1148*CLP90	SELENIUM	94.4	85-115	MG/KG-DRY	23.4	22.1
06/03/92	SPX*ALS2B*76	1148*CLP90	SELENIUM	96.4	85-115	MG/KG-DRY	22.4	21.6
06/03/92	SPX*ALS2B*77	1148*CLP90	SELENIUM	95.1	85-115	MG/KG-DRY	20.4	19.4
06/03/92	SPX*ALS2B*78	1148*CLP90	SELENIUM	95.0	85-115	MG/KG-DRY	24.1	22.9
06/03/92	SPX*ALS2B*79	1148*CLP90	SELENIUM	98.4	85-115	MG/KG-DRY	24.6	24.2
06/03/92	SPX*ALS2B*80	1148*CLP90	SELENIUM	96.6	85-115	MG/KG-DRY	23.8	23.0
06/03/92	SPX*ALS2B*81	1148*CLP90	SELENIUM	95.3	85-115	MG/KG-DRY	23.5	22.4
06/03/92	SPX*ALS2BD*81	1148*CLP90	SELENIUM	95.3	85-115	MG/KG-DRY	23.4	22.3
06/03/92	SPX*ALS2B*83	1148*CLP90	SELENIUM	92.6	85-115	MG/KG-DRY	20.4	18.9
06/03/92	SPX*ALS2B*84	1148*CLP90	SELENIUM	94.4	85-115	MG/KG-DRY	19.8	18.7
06/03/92	SPX*ALS2B*85	1148*CLP90	SELENIUM	94.9	85-115	MG/KG-DRY	21.6	20.5
06/03/92	SPX*ALS2B*86	1148*CLP90	SELENIUM	95.7	85-115	MG/KG-DRY	23.3	22.3

ESE BATCH : G28419

Environmental Science and Engineering Analytical Services
Computer QC Checks

Batch No.: G28419 Analysis Date: 06/03/92 Analyst: GEORGE HOUSTON

	Yes	"Exceptions" No	Comment / Corrective Action
Analysis holding time within criteria?	X		
Extract holding time within criteria?	X		
ICB present?	X		
ICB within acceptance criteria?	X		
CCB present?	X		
CCB within acceptance criteria?	X		
ICV present?	X		
ICV within acceptance criteria?	X		
CCV present?	X		
CCV within acceptance criteria?	X		
Method blank present?	X		
Method blank within acceptance criteria?	X		
LCS present?	X		
LCS within acceptance criteria?	X		
Sample matrix spike present?	X		
Sample matrix spike within acceptance criteria?	X		
Sample replicate present?	X		
Sample replicate within acceptance criteria?	X		
Analytical spike present?	X		
Analytical spike within acceptance criteria?		X	1148*CLP90

Note: Any "NO" answer requires a comment.

OVERRIDE COMMENTS

PROB:ANALYTICAL SPIKE NOT WITHIN
ACCEPTANCE CRITERIA.
EXPL:POSSIBLE MATRIX INTERFERRENCE.MFB 6/12/92

ESE BATCH : G28818
CLASSIFICATION : SELENIUM - CLP SOW 3/90

STATUS : FINAL

METHOD BLANK CORRECTION METHOD : NONE

FLD GRP	PROJECT NUMBER	PROJECT NAME	LAB COORDINATOR
2B	3914042 0201	JMM/ALAMEDA CTO-121	JACKIE HARGROVE-ELLI

SAMPLE CODE	CLIENT ID	DATE ANALYZED	TIME ANALYZED
ALS2B*14	W05-01		
ALS2B*15	W05-02		
ALS2B*16	W05-03		
ALS2B*17	W05-04		
ALS2B*44	B-05PS-01		
ALS2B*45	B-05PS-01		
ALS2B*46	B-05PS-01		
ALS2B*48	B-05PS-02		
ALS2B*49	B-05PS-02		
ALS2B*50	B-05PS-03		
ALS2B*52	B-05PS-04		
ALS2B*53	B-05PS-04		
ALS2B*54	B-05PS-05		
ALS2B*55	B-05PS-05		
ALS2B*68	05PS-DUP1		
ALS2B*70	B-05SP-01		
ALS2B*71	B-05WT-01		
ALS2B*72	B-05WT-02		
ALS2B*82	B-05BS-02		

ESE BATCH : G28818

Initial Calibration Blank Summary

DATE	SAMPLE	STORET	PARAMETER	UNITS	FOUND
06/17/92	ICB*QC*1	1148*CLP90	SELENIUM	MG/KG-DRY	0.300

Continuing Calibration Blank Sample Summary

DATE	SAMPLE	STORET	PARAMETER	UNITS	FOUND
06/17/92	CCB*QC*1	1148*CLP90	SELENIUM	MG/KG-DRY	ND
06/17/92	CCB*QC*2	1148*CLP90	SELENIUM	MG/KG-DRY	ND
06/17/92	CCB*QC*3	1148*CLP90	SELENIUM	MG/KG-DRY	ND
06/17/92	CCB*QC*4	1148*CLP90	SELENIUM	MG/KG-DRY	ND
06/17/92	CCB*QC*5	1148*CLP90	SELENIUM	MG/KG-DRY	ND
06/17/92	CCB*QC*6	1148*CLP90	SELENIUM	MG/KG-DRY	ND
06/17/92	CCB*QC*7	1148*CLP90	SELENIUM	MG/KG-DRY	ND

Initial Calibration Verification Sample Summary

DATE	SAMPLE	STORET	PARAMETER	UNITS	TARGET	FOUND	%RECV	RECV CRIT
06/17/92	ICV*PE-PURE*1	1148*CLP90	SELENIUM	MG/KG-DRY	25.0	27.0	108	90-110

Continuing Calibration Verification Sample Summary

DATE	SAMPLE	STORET	PARAMETER	UNITS	TARGET	FOUND	%RECV	RECV CRIT
06/17/92	CCV*QC*1	1148*CLP90	SELENIUM	MG/KG-DRY	50.0	53.3	107	90-110
06/17/92	CCV*QC*2	1148*CLP90	SELENIUM	MG/KG-DRY	50.0	50.0	100.0	90-110
06/17/92	CCV*QC*3	1148*CLP90	SELENIUM	MG/KG-DRY	50.0	49.1	98.2	90-110
06/17/92	CCV*QC*4	1148*CLP90	SELENIUM	MG/KG-DRY	50.0	49.5	99.0	90-110
06/17/92	CCV*QC*5	1148*CLP90	SELENIUM	MG/KG-DRY	50.0	50.4	101	90-110
06/17/92	CCV*QC*6	1148*CLP90	SELENIUM	MG/KG-DRY	50.0	50.8	102	90-110
06/17/92	CCV*QC*7	1148*CLP90	SELENIUM	MG/KG-DRY	50.0	50.9	102	90-110

Method Blank Sample Summary

DATE	SAMPLE	STORET	PARAMETER	UNITS	FOUND
06/17/92	MB*QC*1	1148*CLP90	SELENIUM	MG/KG-DRY	ND
06/17/92	MB*QC*2	1148*CLP90	SELENIUM	MG/KG-DRY	ND

Laboratory Control Sample Summary

DATE	SAMPLE	STORET	PARAMETER	%RECV	RECV CRIT	UNITS	TARGET	FOUND
06/17/92	LCS*ESE*1	1148*CLP90	SELENIUM	115.3	80-120	MG/KG-DRY	1.96	2.26
06/17/92	LCS*ESE*2	1148*CLP90	SELENIUM	115.9	80-120	MG/KG-DRY	1.89	2.19

Sample Matrix Spike Recovery Summary

DATE	SAMPLE	STORET	PARAMETER	%RECV	RECV CRIT	UNSPIKED	UNITS	TARGET	FOUND	RPD
06/17/92	SPM*ALS2B*68	1148*CLP90	SELENIUM	105.1	75-125	0.0	MG/KG-DRY	2.35	2.47	

Replicate Analysis Sample Summary

DATE	SAMPLE	STORET	PARAMETER	UNITS	REP #1	REP #2	RPD	RPD CRIT
06/17/92	RP*ALS2B*68	1148*CLP90	SELENIUM	MG/KG-DRY	<0.484	<0.484	0.0	20

Spike into Matrix Recovery Summary

DATE	SAMPLE	STORET	PARAMETER	%RECV	RECV CRIT	UNITS	TARGET	FOUND
06/17/92	SPX*ESE*1	1148*CLP90	SELENIUM	106.6	85-115	MG/KG-DRY	19.6	20.9
06/17/92	SPX*ESE*2	1148*CLP90	SELENIUM	105.8	85-115	MG/KG-DRY	18.9	20.0
06/17/92	SPX*ALS2B*14	1148*CLP90	SELENIUM	99.1	85-115	MG/KG-DRY	111	110
06/17/92	SPX*ALS2B*15	1148*CLP90	SELENIUM	99.5	85-115	MG/KG-DRY	20.5	20.4
06/17/92	SPX*ALS2B*16	1148*CLP90	SELENIUM	52.0	85-115	MG/KG-DRY	22.9	11.9
06/17/92	SPX*ALS2B*17	1148*CLP90	SELENIUM	80.8	85-115	MG/KG-DRY	29.7	24.0
06/17/92	SPX*ALS2B*44	1148*CLP90	SELENIUM	90.6	85-115	MG/KG-DRY	21.3	19.3
06/17/92	SPX*ALS2B*45	1148*CLP90	SELENIUM	97.0	85-115	MG/KG-DRY	23.0	22.3
06/17/92	SPX*ALS2B*46	1148*CLP90	SELENIUM	97.1	85-115	MG/KG-DRY	24.4	23.7
06/17/92	SPX*ALS2B*48	1148*CLP90	SELENIUM	86.7	85-115	MG/KG-DRY	22.5	19.5
06/17/92	SPX*ALS2B*49	1148*CLP90	SELENIUM	98.2	85-115	MG/KG-DRY	22.2	21.8
06/17/92	SPX*ALS2B*50	1148*CLP90	SELENIUM	91.0	85-115	MG/KG-DRY	21.2	19.3
06/17/92	SPX*ALS2B*52	1148*CLP90	SELENIUM	94.8	85-115	MG/KG-DRY	21.2	20.1
06/17/92	SPX*ALS2B*53	1148*CLP90	SELENIUM	97.8	85-115	MG/KG-DRY	22.4	21.9
06/17/92	SPX*ALS2B*54	1148*CLP90	SELENIUM	96.5	85-115	MG/KG-DRY	22.7	21.9
06/17/92	SPX*ALS2B*55	1148*CLP90	SELENIUM	99.6	85-115	MG/KG-DRY	22.7	22.6
06/17/92	SPX*ALS2B*68	1148*CLP90	SELENIUM	101.2	85-115	MG/KG-DRY	24.2	24.5
06/17/92	SPX*ALS2BD*68	1148*CLP90	SELENIUM	98.6	85-115	MG/KG-DRY	22.2	21.9
06/17/92	SPX*ALS2B*70	1148*CLP90	SELENIUM	100.0	85-115	MG/KG-DRY	21.5	21.5
06/17/92	SPX*ALS2B*71	1148*CLP90	SELENIUM	100.0	85-115	MG/KG-DRY	20.8	20.8
06/17/92	SPX*ALS2B*72	1148*CLP90	SELENIUM	101.3	85-115	MG/KG-DRY	23.7	24.0

ESE BATCH : G28818

Spike Into Matrix Recovery Summary

DATE	SAMPLE	STORET	PARAMETER	%RECV	RECV CRIT	UNITS	TARGET	FOUND
06/17/92	SPX*ALS2B*82	1148*CLP90	SELENIUM	99.5	85-115	MG/KG-DRY	21.3	21.2

EST BATCH : G28818

Environmental Science and Engineering Analytical Services
Computer QC Checks

Batch No.: G28818 Analysis Date: 06/17/92 Analyst: AMY VAN NOSTRAND

	Yes	"Exceptions" No	Comment / Corrective Action
Analysis holding time within criteria?	X		
Extract holding time within criteria?	X		
ICB present?	X		
ICB within acceptance criteria?	X		
CCB present?	X		
CCB within acceptance criteria?	X		
ICV present?	X		
ICV within acceptance criteria?	X		
CCV present?	X		
CCV within acceptance criteria?	X		
Method blank present?	X		
Method blank within acceptance criteria?	X		
LCS present?	X		
LCS within acceptance criteria?	X		
Sample matrix spike present?	X		
Sample matrix spike within acceptance criteria?	X		
Sample replicate present?	X		
Sample replicate within acceptance criteria?	X		
Analytical spike present?	X		
Analytical spike within acceptance criteria?		X	1148*CLP90

Note: Any "NO" answer requires a comment.

OVERRIDE COMMENTS

PROB.:ANALYTICAL SPIKE NOT WITHIN ACCEPTANCE
CRITERIA.
EXPL.:POSSIBLE MATRIX INTERFERENCE./MFB

SP, SPM AND CALIBRATION CHECKS ARE WITHIN
CRITERIA. SPX OUTSIDE OF CRITERIA FOR
*16 AND *17; A NEGATIVE BIAS MAY BE INDICATED
FOR THESE 2 SAMPLES./JMHE

ESE BATCH : G28851
CLASSIFICATION : SELENIUM, WIPE

STATUS : FINAL

METHOD BLANK CORRECTION METHOD : NONE

FIELD GRP	PROJECT NUMBER	PROJECT NAME	LAB COORDINATOR
28	3914042 0201	JMM/ALAMEDA CTO-121	JACKIE HARGROVE-ELLI

SAMPLE CODE	CLIENT ID	DATE ANALYZED	TIME ANALYZED
ALS2B*18	W05-05		
ALS2B*19	W05-06		
ALS2B*20	W05-07		
ALS2B*21	W05-08		
ALS2B*22	W05-09		
ALS2B*26	W05-DUP		

ESE BATCH : G28851

Continuing Calibration Blank Sample Summary

DATE	SAMPLE	STORET	PARAMETER	UNITS	FOUND
06/17/92	CCB*QC*1	99050*GFAA	SELENIUM,TOTAL SE	UG	ND
06/17/92	CCB*QC*2	99050*GFAA	SELENIUM,TOTAL SE	UG	ND
06/17/92	CCB*QC*3	99050*GFAA	SELENIUM,TOTAL SE	UG	ND
06/17/92	CCB*QC*4	99050*GFAA	SELENIUM,TOTAL SE	UG	ND
06/17/92	CCB*QC*5	99050*GFAA	SELENIUM,TOTAL SE	UG	ND
06/17/92	CCB*QC*6	99050*GFAA	SELENIUM,TOTAL SE	UG	ND
06/17/92	CCB*QC*7	99050*GFAA	SELENIUM,TOTAL SE	UG	ND

Initial Calibration Verification Sample Summary

DATE	SAMPLE	STORET	PARAMETER	UNITS	TARGET	FOUND	%RECV	RECV CRIT
06/17/92	ICV*PE-PURE*1	99050*GFAA	SELENIUM,TOTAL SE	UG	25.0	27.0	108	90-110

Continuing Calibration Verification Sample Summary

DATE	SAMPLE	STORET	PARAMETER	UNITS	TARGET	FOUND	%RECV	RECV CRIT
06/17/92	CCV*QC*1	99050*GFAA	SELENIUM,TOTAL SE	UG	50.0	53.3	107	80-120
06/17/92	CCV*QC*2	99050*GFAA	SELENIUM,TOTAL SE	UG	50.0	50.0	100.0	80-120
06/17/92	CCV*QC*3	99050*GFAA	SELENIUM,TOTAL SE	UG	50.0	49.1	98.2	80-120
06/17/92	CCV*QC*4	99050*GFAA	SELENIUM,TOTAL SE	UG	50.0	49.5	99.0	80-120
06/17/92	CCV*QC*5	99050*GFAA	SELENIUM,TOTAL SE	UG	50.0	50.4	101	80-120
06/17/92	CCV*QC*6	99050*GFAA	SELENIUM,TOTAL SE	UG	50.0	50.8	102	80-120
06/17/92	CCV*QC*7	99050*GFAA	SELENIUM,TOTAL SE	UG	50.0	50.9	102	80-120

Method Blank Sample Summary

DATE	SAMPLE	STORET	PARAMETER	UNITS	FOUND
06/17/92	MB*QC*1	99050*GFAA	SELENIUM,TOTAL SE	UG	ND
06/17/92	MB*QC*2	99050*GFAA	SELENIUM,TOTAL SE	UG	ND

Standard Matrix Spike Recovery Summary

DATE	SAMPLE	STORET	PARAMETER	%RECV	RECV CRIT	UNITS	TARGET	FOUND
06/17/92	SP1*QC*1	99050*GFAA	SELENIUM,TOTAL SE	115.3	71-129	UG	1.96	2.26
06/17/92	SP1*QC*2	99050*GFAA	SELENIUM,TOTAL SE	116.3	71-129	UG	1.96	2.28

Spike into Matrix Recovery Summary

DATE	SAMPLE	STORET	PARAMETER	%RECV	RECV CRIT	UNITS	TARGET	FOUND
06/17/92	SPX*ALS2B*18	99050*GFAA	SELENIUM,TOTAL SE	96.0	85-115	UG	20.0	19.2
06/17/92	SPX*ALS2B*19	99050*GFAA	SELENIUM,TOTAL SE	80.5	85-115	UG	20.0	16.1
06/17/92	SPX*ALS2B*20	99050*GFAA	SELENIUM,TOTAL SE	101.0	85-115	UG	20.0	20.2
06/17/92	SPX*ALS2B*21	99050*GFAA	SELENIUM,TOTAL SE	44.2	85-115	UG	20.0	8.84
06/17/92	SPX*ALS2B*22	99050*GFAA	SELENIUM,TOTAL SE	98.0	85-115	UG	20.0	19.6
06/17/92	SPX*ALS2B*26	99050*GFAA	SELENIUM,TOTAL SE	73.0	85-115	UG	20.0	14.6

ESE BATCH : G28878

Environmental Science and Engineering Analytical Services
Computer QC Checks

Batch No.: G28878 Analysis Date: 06/18/92 Analyst: PAMELA YOUNG

	Yes	"Exceptions" No	Comment / Corrective Action
Analysis holding time within criteria?	X		
Extract holding time within criteria?	X		
ICB present?	X		
ICB within acceptance criteria?	X		
CCB present?	X		
CCB within acceptance criteria?	X		
ICV present?	X		
ICV within acceptance criteria?	X		
CCV present?	X		
CCV within acceptance criteria?	X		
Method blank present?	X		
Method blank within acceptance criteria?	X		
LCS present?	X		
LCS within acceptance criteria?	X		
Sample matrix spike present?	X		
Sample matrix spike within acceptance criteria?	X		
Sample replicate present?	X		
Sample replicate within acceptance criteria?	X		
Analytical spike present?	X		
Analytical spike within acceptance criteria?	X		

Note: Any "NO" answer requires a comment.

OVERRIDE COMMENTS

ESE BATCH : G28901
CLASSIFICATION : THALLIUM - CLP SOW 3/90

STATUS : FINAL

METHOD BLANK CORRECTION METHOD : NONE

FIELD GRP	PROJECT NUMBER	PROJECT NAME	LAB COORDINATOR
ALS2B	3914042 0201	JMM/ALAMEDA CTO-121	JACKIE HARGROVE-ELLI

SAMPLE CODE	CLIENT ID	DATE ANALYZED	TIME ANALYZED
ALS2B*1	W04-03		
ALS2B*2	W04-04		
ALS2B*3	W04-05		
ALS2B*4	W04-06		

ESE BATCH : G28901

Initial Calibration Blank Summary

DATE	SAMPLE	STORET	PARAMETER	UNITS	FOUND
06/19/92	ICB*QC*1	34480*CLP90	THALLIUM	MG/KG-DRY	0.300

ntinuing Calibration Blank Sample Summary

TE	SAMPLE	STORET	PARAMETER	UNITS	FOUND
06/19/92	CCB*QC*1	34480*CLP90	THALLIUM	MG/KG-DRY	0.200
06/19/92	CCB*QC*2	34480*CLP90	THALLIUM	MG/KG-DRY	ND
06/19/92	CCB*QC*3	34480*CLP90	THALLIUM	MG/KG-DRY	ND

Initial Calibration Verification Sample Summary

DATE	SAMPLE	STORET	PARAMETER	UNITS	TARGET	FOUND	%RECV	RECV CRIT
06/19/92	ICV*PE PURE*1	34480*CLP90	THALLIUM	MG/KG-DRY	20.0	20.8	104	90-110

Continuing Calibration Verification Sample Summary

DATE	SAMPLE	STORET	PARAMETER	UNITS	TARGET	FOUND	%RECV	RECV CRIT
06/19/92	CCV*QC*1	34480*CLP90	THALLIUM	MG/KG-DRY	50.0	50.3	101	90-110
06/19/92	CCV*QC*2	34480*CLP90	THALLIUM	MG/KG-DRY	50.0	49.9	99.8	90-110
06/19/92	CCV*QC*3	34480*CLP90	THALLIUM	MG/KG-DRY	50.0	50.7	101	90-110

Method Blank Sample Summary

DATE	SAMPLE	STORET	PARAMETER	UNITS	FOUND
06/19/92	MB*QC*1	34480*CLP90	THALLIUM	MG/KG-DRY	ND

Laboratory Control Sample Summary

DATE	SAMPLE	STORET	PARAMETER	%RECV	RECV CRIT	UNITS	TARGET	FOUND
06/19/92	LCS*ESE*1	34480*CLP90	THALLIUM	99.6	80-120	MG/KG-DRY	9.99	9.95

Sample Matrix Spike Recovery Summary

DATE	SAMPLE	STORET	PARAMETER	%RECV	RECV CRIT	UNSPIKED	UNITS	TARGET	FOUND	RPD
06/19/92	SPM1*ALS2B*1	34480*CLP90	THALLIUM	92.0	75-125	0.0	MG/KG-DRY	9.94	9.14	

Replicate Analysis Sample Summary

	SAMPLE	STORET	PARAMETER	UNITS	REP #1	REP #2	RPD	RPD CRIT
.9/92	RP*ALS2B*1	34480*CLP90	THALLIUM	MG/KG-DRY	<1.70	<1.66	2.38	20

Spike into Matrix Recovery Summary

DATE	SAMPLE	STORET	PARAMETER	%RECV	RECV CRIT	UNITS	TARGET	FOUND
06/19/92	SPX*MB*1	34480*CLP90	THALLIUM	101.0	85-115	MG/KG-DRY	100.0	101
06/19/92	SPX*ESE*1	34480*CLP90	THALLIUM	98.0	85-115	MG/KG-DRY	20.0	19.6
06/19/92	SPX*ALS2B*1	34480*CLP90	THALLIUM	82.0	85-115	MG/KG-DRY	20.0	16.4
06/19/92	SPX*ALS2BD*1	34480*CLP90	THALLIUM	86.7	85-115	MG/KG-DRY	19.6	17.0
06/19/92	SPX*ALS2B*2	34480*CLP90	THALLIUM	75.2	85-115	MG/KG-DRY	20.2	15.2
06/19/92	SPX*ALS2B*3	34480*CLP90	THALLIUM	86.9	85-115	MG/KG-DRY	20.6	17.9
06/19/92	SPX*ALS2B*4	34480*CLP90	THALLIUM	89.6	85-115	MG/KG-DRY	20.2	18.1

ESE BATCH : G28901

Environmental Science and Engineering Analytical Services
Computer QC Checks

Batch No.: G28901 Analysis Date: 06/19/92 Analyst: PAMELA YOUNG

	Yes	"Exceptions" No	Comment / Corrective Action
Analysis holding time within criteria?	X		
Extract holding time within criteria?	X		
ICB present?	X		
ICB within acceptance criteria?	X		
CCB present?	X		
CCB within acceptance criteria?	X		
ICV present?	X		
ICV within acceptance criteria?	X		
CCV present?	X		
CCV within acceptance criteria?	X		
Method blank present?	X		
Method blank within acceptance criteria?	X		
LCS present?	X		
LCS within acceptance criteria?	X		
Sample matrix spike present?	X		
Sample matrix spike within acceptance criteria?	X		
Sample replicate present?	X		
Sample replicate within acceptance criteria?	X		
Analytical spike present?	X		
Analytical spike within acceptance criteria?		X	34480*CLP9 _____

Note: Any "NO" answer requires a comment.

OVERRIDE COMMENTS

PROB:ANALYTICAL SPIKE NOT WITHIN
ACCEPTANCE CRITERIA.
EXPL:POSSIBLE MATRIX INTER-
FERRENCE./MFB/6/24/92

SP, SPM, AND CALIBRATION CHECKS ARE WITHIN CRITERIA.
LOW SPX FOR ONE SAMPLE MAY INDICATE A SLIGHT NEGATIVE
BIAS FOR THAT SAMPLE./JMHE

ESE BATCH : G29068
CLASSIFICATION : THALLIUM - CLP SOW 3/90

STATUS : FINAL

METHOD BLANK CORRECTION METHOD : NONE

FLD GRP	PROJECT NUMBER	PROJECT NAME	LAB COORDINATOR
2B	3914042 0201	JMM/ALAMEDA CTO-121	JACKIE HARGROVE-ELLI

SAMPLE CODE	CLIENT ID	DATE ANALYZED	TIME ANALYZED
ALS2B*51	B-05PS-03		

ESE BATCH : G29068

Environmental Science and Engineering Analytical Services

Computer QC Checks

Batch No.: G29068 Analysis Date: 06/24/92 Analyst: PAMELA YOUNG

	Yes	"Exceptions" No	Comment / Corrective Action
Analysis holding time within criteria?	X		
Extract holding time within criteria?	X		
ICB present?	X		
ICB within acceptance criteria?	X		
CCB present?	X		
CCB within acceptance criteria?	X		
ICV present?	X		
ICV within acceptance criteria?	X		
CCV present?	X		
CCV within acceptance criteria?	X		
Method blank present?	X		
Method blank within acceptance criteria?	X		
LCS present?	X		
LCS within acceptance criteria?	X		
Sample matrix spike present?	X		
Sample matrix spike within acceptance criteria?	X		
Sample replicate present?	X		
Sample replicate within acceptance criteria?	X		
Analytical spike present?	X		
Analytical spike within acceptance criteria?	X		

Note: Any "NO" answer requires a comment.

ESE BATCH : G29068

Initial Calibration Blank Summary

DATE	SAMPLE	STORET	PARAMETER	UNITS	FOUND
06/24/92	ICB*QC*1	34480*CLP90	THALLIUM	MG/KG-DRY	ND

tinuing Calibration Blank Sample Summary

ATE	SAMPLE	STORET	PARAMETER	UNITS	FOUND
06/24/92	CCB*QC*1	34480*CLP90	THALLIUM	MG/KG-DRY	ND
06/24/92	CCB*QC*2	34480*CLP90	THALLIUM	MG/KG-DRY	ND

Initial Calibration Verification Sample Summary

DATE	SAMPLE	STORET	PARAMETER	UNITS	TARGET	FOUND	%RECV	RECV CRIT
06/24/92	ICV*PE PURE*1	34480*CLP90	THALLIUM	MG/KG-DRY	20.0	20.7	104	90-110

Continuing Calibration Verification Sample Summary

DATE	SAMPLE	STORET	PARAMETER	UNITS	TARGET	FOUND	%RECV	RECV CRIT
06/24/92	CCV*QC*1	34480*CLP90	THALLIUM	MG/KG-DRY	50.0	50.5	101	90-110
06/24/92	CCV*QC*2	34480*CLP90	THALLIUM	MG/KG-DRY	50.0	50.9	102	90-110

Method Blank Sample Summary

DATE	SAMPLE	STORET	PARAMETER	UNITS	FOUND
06/24/92	MB*QC*1	34480*CLP90	THALLIUM	MG/KG-DRY	ND

Laboratory Control Sample Summary

DATE	SAMPLE	STORET	PARAMETER	%RECV	RECV CRIT	UNITS	TARGET	FOUND
06/24/92	LCS*ESE*1	34480*CLP90	THALLIUM	86.4	80-120	MG/KG-DRY	9.99	8.63

Sample Matrix Spike Recovery Summary

DATE	SAMPLE	STORET	PARAMETER	%RECV	RECV CRIT	UNSPIKED	UNITS	TARGET	FOUND	RPD
06/24/92	SPM1*ALS2B*51	34480*CLP90	THALLIUM	87.0	75-125	0.0	MG/KG-DRY	11.5	10.00	

Replicate Analysis Sample Summary

DATE	SAMPLE	STORET	PARAMETER	UNITS	REP #1	REP #2	RPD	RPD CRIT
24/92	RP*ALS2B*51	34480*CLP90	THALLIUM	MG/KG-DRY	<0.387	<0.391	1.03	20

ke into Matrix Recovery Summary

DATE	SAMPLE	STORET	PARAMETER	%RECV	RECV CRIT	UNITS	TARGET	FOUND
06/24/92	SPX*MB*1	34480*CLP90	THALLIUM	93.2	85-115	MG/KG-DRY	100.0	93.2
06/24/92	SPX*ESE*1	34480*CLP90	THALLIUM	89.0	85-115	MG/KG-DRY	20.0	17.8
06/24/92	SPX*ALS2B*51	34480*CLP90	THALLIUM	93.4	85-115	MG/KG-DRY	22.8	21.3
06/24/92	SPX*ALS2BD*51	34480*CLP90	THALLIUM	95.7	85-115	MG/KG-DRY	23.0	22.0

ESE BATCH : G28851

Environmental Science and Engineering Analytical Services
Computer QC Checks

Batch No.: G28851 Analysis Date: 06/17/92 Analyst: AMY VAN NOSTRAND

	Yes	"Exceptions" No	Comment / Corrective Action
Analysis holding time within criteria?	X		
Extract holding time within criteria?	X		
ICV present?	X		
ICV within acceptance criteria?	X		
CCV present?	X		
CCV within acceptance criteria?	X		
Method blank present?	X		
Method blank within acceptance criteria?	X		
Standard matrix spike present?	X		
Standard matrix spike within acceptance criteria?	X		

Note: Any "NO" answer requires a comment.

ESE BATCH : G28965
CLASSIFICATION : SELENIUM, WIPE

STATUS : FINAL

METHOD BLANK CORRECTION METHOD : NONE

FLD GRP	PROJECT NUMBER	PROJECT NAME	LAB COORDINATOR
'B	3914042 0201	JMM/ALAMEDA CTO-121	JACKIE HARGROVE-ELLI

SAMPLE CODE	CLIENT ID	DATE ANALYZED	TIME ANALYZED
ALS2B*5	W04-07		
ALS2B*6	W04-08		
ALS2B*7	W04-09		
ALS2B*8	W04-10		
ALS2B*9	W04-11		
ALS2B*10	W04-12		
ALS2B*11	W04-13		
ALS2B*12	W04-14		
ALS2B*13	W04-DUP		
ALS2B*23	W05-10		
ALS2B*24	W05-11		
ALS2B*25	W05-12		

ESE BATCH : G28965

Initial Calibration Blank Summary

DATE	SAMPLE	STORET	PARAMETER	UNITS	FOUND
06/23/92	ICB*QC*1	99050*GFAA	SELENIUM,TOTAL SE	UG	0.300

Continuing Calibration Blank Sample Summary

DATE	SAMPLE	STORET	PARAMETER	UNITS	FOUND
06/23/92	CCB*QC*1	99050*GFAA	SELENIUM,TOTAL SE	UG	0.300
06/23/92	CCB*QC*2	99050*GFAA	SELENIUM,TOTAL SE	UG	0.200
06/23/92	CCB*QC*3	99050*GFAA	SELENIUM,TOTAL SE	UG	0.300
06/23/92	CCB*QC*4	99050*GFAA	SELENIUM,TOTAL SE	UG	0.700
06/23/92	CCB*QC*5	99050*GFAA	SELENIUM,TOTAL SE	UG	0.600
06/23/92	CCB*QC*6	99050*GFAA	SELENIUM,TOTAL SE	UG	0.600
06/23/92	CCB*QC*7	99050*GFAA	SELENIUM,TOTAL SE	UG	0.700
06/23/92	CCB*QC*8	99050*GFAA	SELENIUM,TOTAL SE	UG	0.700
06/23/92	CCB*QC*9	99050*GFAA	SELENIUM,TOTAL SE	UG	0.700
06/23/92	CCB*QC*10	99050*GFAA	SELENIUM,TOTAL SE	UG	1.00

Initial Calibration Verification Sample Summary

DATE	SAMPLE	STORET	PARAMETER	UNITS	TARGET	FOUND	%RECV	RECV CRIT
06/23/92	ICV*PE-PURE*1	99050*GFAA	SELENIUM,TOTAL SE	UG	25.0	26.2	105	90-110

Continuing Calibration Verification Sample Summary

DATE	SAMPLE	STORET	PARAMETER	UNITS	TARGET	FOUND	%RECV	RECV CRIT
06/23/92	CCV*QC*1	99050*GFAA	SELENIUM,TOTAL SE	UG	50.0	53.5	107	80-120
06/23/92	CCV*QC*2	99050*GFAA	SELENIUM,TOTAL SE	UG	50.0	52.7	105	80-120
06/23/92	CCV*QC*3	99050*GFAA	SELENIUM,TOTAL SE	UG	50.0	46.0	92.0	80-120
06/23/92	CCV*QC*4	99050*GFAA	SELENIUM,TOTAL SE	UG	50.0	47.5	95.0	80-120
06/23/92	CCV*QC*5	99050*GFAA	SELENIUM,TOTAL SE	UG	50.0	47.7	95.4	80-120
06/23/92	CCV*QC*6	99050*GFAA	SELENIUM,TOTAL SE	UG	50.0	47.8	95.6	80-120
06/23/92	CCV*QC*7	99050*GFAA	SELENIUM,TOTAL SE	UG	50.0	48.0	96.0	80-120
06/23/92	CCV*QC*8	99050*GFAA	SELENIUM,TOTAL SE	UG	50.0	48.4	96.8	80-120
06/23/92	CCV*QC*9	99050*GFAA	SELENIUM,TOTAL SE	UG	50.0	47.9	95.8	80-120
06/23/92	CCV*QC*10	99050*GFAA	SELENIUM,TOTAL SE	UG	50.0	46.8	93.6	80-120

Method Blank Sample Summary

DATE	SAMPLE	STORET	PARAMETER	UNITS	FOUND
06/23/92	MB*QC*1	99050*GFAA	SELENIUM,TOTAL SE	UG	0.100

Laboratory Control Sample Summary

DATE	SAMPLE	STORET	PARAMETER	%RECV	RECV CRIT	UNITS	TARGET	FOUND
06/23/92	LCS*ESE*1	99050*GFAA	SELENIUM,TOTAL SE	119.0	80-120	UG	10.00	11.9

Spike Into Matrix Recovery Summary

DATE	SAMPLE	STORET	PARAMETER	%RECV	RECV CRIT	UNITS	TARGET	FOUND
06/23/92	SPX*MB*1	99050*GFAA	SELENIUM,TOTAL SE	114.0	85-115	UG	100.0	114
06/23/92	SPX*ESE*1	99050*GFAA	SELENIUM,TOTAL SE	113.0	85-115	UG	100.0	113
06/23/92	SPX*ALS2B*5	99050*GFAA	SELENIUM,TOTAL SE	90.5	85-115	UG	20.0	18.1
06/23/92	SPX*ALS2B*6	99050*GFAA	SELENIUM,TOTAL SE	65.0	85-115	UG	20.0	13.0
06/23/92	SPX*ALS2B*7	99050*GFAA	SELENIUM,TOTAL SE	93.0	85-115	UG	20.0	18.6
06/23/92	SPX*ALS2B*8	99050*GFAA	SELENIUM,TOTAL SE	92.5	85-115	UG	20.0	18.5
06/23/92	SPX*ALS2B*10	99050*GFAA	SELENIUM,TOTAL SE	51.0	85-115	UG	20.0	10.2
06/23/92	SPX*ALS2B*12	99050*GFAA	SELENIUM,TOTAL SE	91.5	85-115	UG	20.0	18.3
06/23/92	SPX*ALS2B*13	99050*GFAA	SELENIUM,TOTAL SE	91.0	85-115	UG	20.0	18.2
06/23/92	SPX*ALS2B*23	99050*GFAA	SELENIUM,TOTAL SE	80.5	85-115	UG	20.0	16.1
06/23/92	SPX*ALS2B*24	99050*GFAA	SELENIUM,TOTAL SE	55.5	85-115	UG	20.0	11.1
06/23/92	SPX*ALS2B*25	99050*GFAA	SELENIUM,TOTAL SE	97.0	85-115	UG	20.0	19.4

ESE BATCH : G28965

Environmental Science and Engineering Analytical Services
Computer QC Checks

Batch No.: G28965 Analysis Date: 06/23/92 Analyst: CHRISTOPHER HORRELL

	"Exceptions"		
	Yes	No	Comment / Corrective Action
Analysis holding time within criteria?	X		
Extract holding time within criteria?	X		
ICV present?	X		
ICV within acceptance criteria?	X		
CCV present?	X		
CCV within acceptance criteria?	X		
Method blank present?	X		
Method blank within acceptance criteria?	X		
Standard matrix spike present?	X		
Standard matrix spike within acceptance criteria?	X		

Note: Any "NO" answer requires a comment.

ESE BATCH : G29085
CLASSIFICATION : SELENIUM - CLP SOW 3/90

STATUS : FINAL

METHOD BLANK CORRECTION METHOD : NONE

FIELD GRP	PROJECT NUMBER	PROJECT NAME	LAB COORDINATOR
ALS2B	3914042 0201	JMM/ALAMEDA CTO-121	JACKIE HARGROVE-ELLI

SAMPLE CODE	CLIENT ID	DATE ANALYZED	TIME ANALYZED
ALS2B*1	W04-03	06/19/92	
ALS2B*2	W04-04	06/19/92	
ALS2B*3	W04-05	06/25/92	
ALS2B*4	W04-06	06/24/92	

ESE BATCH : G29085

Initial Calibration Blank Summary

DATE	SAMPLE	STORET	PARAMETER	UNITS	FOUND
06/18/92	ICB*QC*2	1148*CLP90	SELENIUM	MG/KG-DRY	ND
06/18/92	ICB*QC*3	1148*CLP90	SELENIUM	MG/KG-DRY	ND

tinuing Calibration Blank Sample Summary

DATE	SAMPLE	STORET	PARAMETER	UNITS	FOUND
06/18/92	CCB*QC*1	1148*CLP90	SELENIUM	MG/KG-DRY	ND
06/18/92	CCB*QC*2	1148*CLP90	SELENIUM	MG/KG-DRY	ND
06/18/92	CCB*QC*3	1148*CLP90	SELENIUM	MG/KG-DRY	ND
06/18/92	CCB*QC*4	1148*CLP90	SELENIUM	MG/KG-DRY	ND
06/18/92	CCB*QC*5	1148*CLP90	SELENIUM	MG/KG-DRY	ND
06/18/92	CCB*QC*6	1148*CLP90	SELENIUM	MG/KG-DRY	ND
06/18/92	CCB*QC*7	1148*CLP90	SELENIUM	MG/KG-DRY	ND

Initial Calibration Verification Sample Summary

DATE	SAMPLE	STORET	PARAMETER	UNITS	TARGET	FOUND	%RECV	RECV CRIT
06/18/92	ICV*PE PURE*1	1148*CLP90	SELENIUM	MG/KG-DRY	25.0	26.9	108	90-110
06/18/92	ICV*PE PURE*2	1148*CLP90	SELENIUM	MG/KG-DRY	25.0	27.2	109	90-110
06/18/92	ICV*PE PURE*3	1148*CLP90	SELENIUM	MG/KG-DRY	25.0	23.8	95.2	90-110
06/18/92	ICV*PE PURE*4	1148*CLP90	SELENIUM	MG/KG-DRY	25.0	25.7	103	90-110

Continuing Calibration Verification Sample Summary

DATE	SAMPLE	STORET	PARAMETER	UNITS	TARGET	FOUND	%RECV	RECV CRIT
06/18/92	CCV*QC*1	1148*CLP90	SELENIUM	MG/KG-DRY	50.0	53.8	108	90-110
06/18/92	CCV*QC*2	1148*CLP90	SELENIUM	MG/KG-DRY	50.0	50.5	101	90-110
06/18/92	CCV*QC*3	1148*CLP90	SELENIUM	MG/KG-DRY	50.0	50.9	102	90-110
06/18/92	CCV*QC*4	1148*CLP90	SELENIUM	MG/KG-DRY	50.0	51.8	104	90-110
06/18/92	CCV*QC*5	1148*CLP90	SELENIUM	MG/KG-DRY	50.0	52.6	105	90-110
06/18/92	CCV*QC*6	1148*CLP90	SELENIUM	MG/KG-DRY	50.0	50.3	101	90-110
06/18/92	CCV*QC*7	1148*CLP90	SELENIUM	MG/KG-DRY	50.0	50.3	101	90-110

Method Blank Sample Summary

DATE	SAMPLE	STORET	PARAMETER	UNITS	FOUND
06/18/92	MB*QC*1	1148*CLP90	SELENIUM	MG/KG-DRY	0.100

ratory Control Sample Summary

DATE	SAMPLE	STORET	PARAMETER	%RECV	RECV CRIT	UNITS	TARGET	FOUND
06/18/92	LCS*ESE*1	1148*CLP90	SELENIUM	111.0	80-120	MG/KG-DRY	2.00	2.22

Sample Matrix Spike Recovery Summary

DATE	SAMPLE	STORET	PARAMETER	%RECV	RECV CRIT	UNSPIKED	UNITS	TARGET	FOUND	RPD
06/18/92	SPM*ALS2B*1	1148*CLP90	SELENIUM	-60.3	75-125	1.20	MG/KG-DRY	1.99	-1.20	

Replicate Analysis Sample Summary

DATE	SAMPLE	STORET	PARAMETER	UNITS	REP #1	REP #2	RPD	RPD CRIT
06/18/92	RP*ALS2B*1	1148*CLP90	SELENIUM	MG/KG-DRY	<4.01	<3.91	2.53	20

Spike into Matrix Recovery Summary

DATE	SAMPLE	STORET	PARAMETER	%RECV	RECV CRIT	UNITS	TARGET	FOUND
06/18/92	SPX*MB*1	1148*CLP90	SELENIUM	106.0	85-115	MG/KG-DRY	100.0	106
06/18/92	SPX*ESE*1	1148*CLP90	SELENIUM	103.5	85-115	MG/KG-DRY	20.0	20.7
06/18/92	SPX*ALS2BD*1	1148*CLP90	SELENIUM	106.0	85-115	MG/KG-DRY	20.0	21.2
06/18/92	SPX*ALS2BDD*1	1148*CLP90	SELENIUM	105.2	85-115	MG/KG-DRY	19.3	20.3
06/18/92	SPX*ALS2B*2	1148*CLP90	SELENIUM	105.0	85-115	MG/KG-DRY	20.2	21.2

ESE BATCH : G29085

Environmental Science and Engineering Analytical Services
Computer QC Checks

Batch No.: G29085 Analysis Date: 06/18/92 Analyst: CHRISTOPHER HORRELL

	Yes	"Exceptions" No	Comment / Corrective Action
Analysis holding time within criteria?	X		
Extract holding time within criteria?	X		
ICB present?	X		
ICB within acceptance criteria?	X		
CCB present?	X		
CCB within acceptance criteria?	X		
ICV present?	X		
ICV within acceptance criteria?	X		
CCV present?	X		
CCV within acceptance criteria?	X		
Method blank present?	X		
Method blank within acceptance criteria?	X		
LCS present?	X		
LCS within acceptance criteria?	X		
Sample matrix spike present?	X		
Sample matrix spike within acceptance criteria?		X	1148*CLP90
Sample replicate present?	X		
Sample replicate within acceptance criteria?	X		
Analytical spike present?	X		
Analytical spike within acceptance criteria?	X		

Note: Any "NO" answer requires a comment.

OVERRIDE COMMENTS

PROB:SAMPLE MATRIX SPIKE NOT WITHIN
ACCEPTANCE CRITERIA.
EXPL:POSSIBLE MATRIX INTERFERENCE.
SAMPLE WAS ANALYZED UNDILUTED
SPX RECOVERY <20%. WHEN SAMPLE
WAS DILUTED 1:10, RECOVERY = 106%
KWB/6/30/92
SP, AND CALIBRATION CHECKS ARE WITHIN CRITERIA. LOW SPM
RECOVERY INDICATES A SEVERE NEGATIVE MATRIX INTERFERENCE./JMHE

ESE BATCH : G29101
CLASSIFICATION : SELENIUM - CLP SOW 3/90

STATUS : FINAL

METHOD BLANK CORRECTION METHOD : NONE

FLD GRP	PROJECT NUMBER	PROJECT NAME	LAB COORDINATOR
2B	3914042 0201	JMM/ALAMEDA CTO-121	JACKIE HARGROVE-ELLI

SAMPLE CODE	CLIENT ID	DATE ANALYZED	TIME ANALYZED
ALS2B*51	B-05PS-03		

ESE BATCH : G29101

Initial Calibration Blank Summary

DATE	SAMPLE	STORET	PARAMETER	UNITS	FOUND
06/24/92	ICB*QC*1	1148*CLP90	SELENIUM	MG/KG-DRY	ND

Continuing Calibration Blank Sample Summary

DATE	SAMPLE	STORET	PARAMETER	UNITS	FOUND
06/24/92	CCB*QC*1	1148*CLP90	SELENIUM	MG/KG-DRY	ND
06/24/92	CCB*QC*2	1148*CLP90	SELENIUM	MG/KG-DRY	ND

Initial Calibration Verification Sample Summary

DATE	SAMPLE	STORET	PARAMETER	UNITS	TARGET	FOUND	%RECV	RECV CRIT
06/24/92	ICV*PE-PURE*1	1148*CLP90	SELENIUM	MG/KG-DRY	25.0	27.3	109	90-110

Continuing Calibration Verification Sample Summary

DATE	SAMPLE	STORET	PARAMETER	UNITS	TARGET	FOUND	%RECV	RECV CRIT
06/24/92	CCV*QC*1	1148*CLP90	SELENIUM	MG/KG-DRY	50.0	50.9	102	90-110
06/24/92	CCV*QC*2	1148*CLP90	SELENIUM	MG/KG-DRY	50.0	51.5	103	90-110

Method Blank Sample Summary

DATE	SAMPLE	STORET	PARAMETER	UNITS	FOUND
06/24/92	MB*QC*1	1148*CLP90	SELENIUM	MG/KG-DRY	0.400

Laboratory Control Sample Summary

DATE	SAMPLE	STORET	PARAMETER	%RECV	RECV CRIT	UNITS	TARGET	FOUND
06/24/92	LCS*ESE*1	1148*CLP90	SELENIUM	105.1	80-120	MG/KG-DRY	0.999	1.05

Sample Matrix Spike Recovery Summary

DATE	SAMPLE	STORET	PARAMETER	%RECV	RECV CRIT	UNSPIKED	UNITS	TARGET	FOUND	RPD
06/24/92	SPM1*ALS2B*51	1148*CLP90	SELENIUM	97.4	75-125	0.0	MG/KG-DRY	1.15	1.12	

Replicate Analysis Sample Summary

DATE	SAMPLE	STORET	PARAMETER	UNITS	REP #1	REP #2	RPD	RPD CRIT
06/24/92	RP*ALS2B*51	1148*CLP90	SELENIUM	MG/KG-DRY	<0.023	<0.034	38.6	20

Spike Into Matrix Recovery Summary

DATE	SAMPLE	STORET	PARAMETER	%RECV	RECV CRIT	UNITS	TARGET	FOUND
06/24/92	SPX*MB*1	1148*CLP90	SELENIUM	103.0	85-115	MG/KG-DRY	100.0	103
06/24/92	SPX*ESE*1	1148*CLP90	SELENIUM	99.6	85-115	MG/KG-DRY	9.99	9.95
06/24/92	SPX*ALS2B*51	1148*CLP90	SELENIUM	100.9	85-115	MG/KG-DRY	11.4	11.5
06/24/92	SPX*ALS2BD*51	1148*CLP90	SELENIUM	107.0	85-115	MG/KG-DRY	11.5	12.3

ESE BATCH : G29101

Environmental Science and Engineering Analytical Services
Computer QC Checks

Batch No.: G29101 Analysis Date: 06/24/92 Analyst: LISA SWAYZE

	Yes	"Exceptions" No	Comment / Corrective Action
Analysis holding time within criteria?	X		
Extract holding time within criteria?	X		
ICB present?	X		
ICB within acceptance criteria?	X		
CCB present?	X		
CCB within acceptance criteria?	X		
ICV present?	X		
ICV within acceptance criteria?	X		
CCV present?	X		
CCV within acceptance criteria?	X		
Method blank present?	X		
Method blank within acceptance criteria?	X		
LCS present?	X		
LCS within acceptance criteria?	X		
Sample matrix spike present?	X		
Sample matrix spike within acceptance criteria?	X		
Sample replicate present?	X		
Sample replicate within acceptance criteria?		X	1148*CLP90
Analytical spike present?	X		
Analytical spike within acceptance criteria?	X		

Note: Any "NO" answer requires a comment.

OVERRIDE COMMENTS
PROB.:RP NOT WITHIN CRITERIA.
.:BOTH VALUES ARE LESS THAN D.L., COMPUTER CALCULATES THE RPD ON DLs. NO IMPACT TO DATA./JMHE

ESE BATCH : G28450
CLASSIFICATION : THALLIUM - CLP SOW 3/90

STATUS : FINAL

METHOD BLANK CORRECTION METHOD : NONE

FIELD GRP	PROJECT NUMBER	PROJECT NAME	LAB COORDINATOR
ALS2B	3914042 0201	JMM/ALAMEDA CTO-121	JACKIE HARGROVE-ELLI

SAMPLE CODE	CLIENT ID	DATE ANALYZED	TIME ANALYZED
ALS2B*27	M-BG1		
ALS2B*28	M-BG1		
ALS2B*29	M-BG1		
ALS2B*30	M-BG1		
ALS2B*31	M-BG2		
ALS2B*32	M-BG2		
ALS2B*33	M-BG2		
ALS2B*34	M-BG2		
ALS2B*35	M-BG3		
ALS2B*36	M-BG3		
ALS2B*37	M-BG3		
ALS2B*38	M-BG3		
ALS2B*39	M-BG4		
ALS2B*40	M-BG4		
ALS2B*41	M-BG4		
ALS2B*42	M-BG4		
ALS2B*43	BG-DUP1		
ALS2B*73	B-05HW-02		
ALS2B*74	B-05HW-02		
ALS2B*75	B-05HW-02		
ALS2B*76	B-05HW-02		
ALS2B*77	M-05HW-01		
ALS2B*78	M-05HW-01		
ALS2B*79	M-05HW-01		
ALS2B*80	M-05HW-01		
ALS2B*81	05HW-DUP1		
ALS2B*83	M-05BS-01		
ALS2B*84	M-05BS-01		
ALS2B*85	M-05BS-01		
ALS2B*86	M-05BS-01		

ESE BATCH : G28450

Initial Calibration Blank Summary

DATE	SAMPLE	STORET	PARAMETER	UNITS	FOUND
06/04/92	ICB*QC*1	34480*CLP90	THALLIUM	MG/KG-DRY	ND

Inuing Calibration Blank Sample Summary

E	SAMPLE	STORET	PARAMETER	UNITS	FOUND
06/04/92	CCB*QC*1	34480*CLP90	THALLIUM	MG/KG-DRY	0.400
06/04/92	CCB*QC*2	34480*CLP90	THALLIUM	MG/KG-DRY	0.400
06/04/92	CCB*QC*3	34480*CLP90	THALLIUM	MG/KG-DRY	ND
06/04/92	CCB*QC*4	34480*CLP90	THALLIUM	MG/KG-DRY	ND
06/04/92	CCB*QC*5	34480*CLP90	THALLIUM	MG/KG-DRY	ND
06/04/92	CCB*QC*6	34480*CLP90	THALLIUM	MG/KG-DRY	ND
06/04/92	CCB*QC*7	34480*CLP90	THALLIUM	MG/KG-DRY	ND
06/04/92	CCB*QC*8	34480*CLP90	THALLIUM	MG/KG-DRY	0.900
06/04/92	CCB*QC*9	34480*CLP90	THALLIUM	MG/KG-DRY	0.300
06/04/92	CCB*QC*10	34480*CLP90	THALLIUM	MG/KG-DRY	ND

Initial Calibration Verification Sample Summary

DATE	SAMPLE	STORET	PARAMETER	UNITS	TARGET	FOUND	%RECV	RECV CRIT
06/04/92	ICV*PE-PURE*1	34480*CLP90	THALLIUM	MG/KG-DRY	20.0	20.3	102	90-110

Continuing Calibration Verification Sample Summary

DATE	SAMPLE	STORET	PARAMETER	UNITS	TARGET	FOUND	%RECV	RECV CRIT
06/04/92	CCV*QC*1	34480*CLP90	THALLIUM	MG/KG-DRY	50.0	49.8	99.6	90-110
06/04/92	CCV*QC*2	34480*CLP90	THALLIUM	MG/KG-DRY	50.0	49.8	99.6	90-110
06/04/92	CCV*QC*3	34480*CLP90	THALLIUM	MG/KG-DRY	50.0	50.5	101	90-110
06/04/92	CCV*QC*4	34480*CLP90	THALLIUM	MG/KG-DRY	50.0	52.4	105	90-110
06/04/92	CCV*QC*5	34480*CLP90	THALLIUM	MG/KG-DRY	50.0	52.9	106	90-110
06/04/92	CCV*QC*6	34480*CLP90	THALLIUM	MG/KG-DRY	50.0	52.6	105	90-110
06/04/92	CCV*QC*7	34480*CLP90	THALLIUM	MG/KG-DRY	50.0	53.9	108	90-110
06/04/92	CCV*QC*8	34480*CLP90	THALLIUM	MG/KG-DRY	50.0	54.6	109	90-110
06/04/92	CCV*QC*9	34480*CLP90	THALLIUM	MG/KG-DRY	50.0	48.2	96.4	90-110
06/04/92	CCV*QC*10	34480*CLP90	THALLIUM	MG/KG-DRY	50.0	47.0	94.0	90-110

Method Blank Sample Summary

	SAMPLE	STORET	PARAMETER	UNITS	FOUND
/92	MB*QC*1	34480*CLP90	THALLIUM	MG/KG-DRY	ND
4/92	MB*QC*2	34480*CLP90	THALLIUM	MG/KG-DRY	ND

Laboratory Control Sample Summary

DATE	SAMPLE	STORET	PARAMETER	%RECV	RECV CRIT	UNITS	TARGET	FOUND
06/04/92	LCS*ESE*1	34480*CLP90	THALLIUM	97.4	80-120	MG/KG-DRY	9.97	9.71
06/04/92	LCS*ESE*2	34480*CLP90	THALLIUM	99.8	80-120	MG/KG-DRY	9.98	9.96

Sample Matrix Spike Recovery Summary

DATE	SAMPLE	STORET	PARAMETER	%RECV	RECV CRIT	UNSPIKED	UNITS	TARGET	FOUND	RPD
06/04/92	SPM1*ALS2B*43	34480*CLP90	THALLIUM	86.8	75-125	0.0	MG/KG-DRY	11.3	9.81	
06/04/92	SPM1*ALS2B*81	34480*CLP90	THALLIUM	82.2	75-125	0.0	MG/KG-DRY	11.5	9.45	

Replicate Analysis Sample Summary

DATE	SAMPLE	STORET	PARAMETER	UNITS	REP #1	REP #2	RPD	RPD CRIT
06/04/92	RP*ALS2B*43	34480*CLP90	THALLIUM	MG/KG-DRY	<0.386	<0.400	3.56	20
06/04/92	RP*ALS2B*81	34480*CLP90	THALLIUM	MG/KG-DRY	<0.399	<0.398	0.251	20

Spike into Matrix Recovery Summary

DATE	SAMPLE	STORET	PARAMETER	%RECV	RECV CRIT	UNITS	TARGET	FOUND
06/04/92	SPX*MB*1	34480*CLP90	THALLIUM	97.6	85-115	MG/KG-DRY	100.0	97.6
06/04/92	SPX*MB*2	34480*CLP90	THALLIUM	98.4	85-115	MG/KG-DRY	100.0	98.4
06/04/92	SPX*ESE*1	34480*CLP90	THALLIUM	97.5	85-115	MG/KG-DRY	19.9	19.4
06/04/92	SPX*ESE*2	34480*CLP90	THALLIUM	91.0	85-115	MG/KG-DRY	20.0	18.2
06/04/92	SPX*ALS2B*27	34480*CLP90	THALLIUM	87.6	85-115	MG/KG-DRY	20.2	17.7
06/04/92	SPX*ALS2B*28	34480*CLP90	THALLIUM	88.8	85-115	MG/KG-DRY	24.2	21.5
06/04/92	SPX*ALS2B*29	34480*CLP90	THALLIUM	86.3	85-115	MG/KG-DRY	29.3	25.3
06/04/92	SPX*ALS2B*30	34480*CLP90	THALLIUM	88.8	85-115	MG/KG-DRY	24.2	21.5
06/04/92	SPX*ALS2B*31	34480*CLP90	THALLIUM	88.4	85-115	MG/KG-DRY	21.6	19.1
06/04/92	SPX*ALS2B*32	34480*CLP90	THALLIUM	92.5	85-115	MG/KG-DRY	20.0	18.5
'/92	SPX*ALS2B*33	34480*CLP90	THALLIUM	92.2	85-115	MG/KG-DRY	23.1	21.3
92	SPX*ALS2B*34	34480*CLP90	THALLIUM	83.2	85-115	MG/KG-DRY	23.2	19.3
/92	SPX*ALS2B*35	34480*CLP90	THALLIUM	81.9	85-115	MG/KG-DRY	19.3	15.8
06/04/92	SPX*ALS2B*36	34480*CLP90	THALLIUM	94.0	85-115	MG/KG-DRY	21.5	20.2
06/04/92	SPX*ALS2B*37	34480*CLP90	THALLIUM	91.0	85-115	MG/KG-DRY	21.2	19.3

ESE BATCH : 628430

Spike Into Matrix Recovery Summary

DATE	SAMPLE	STORET	PARAMETER	%RECV	RECV CRIT	UNITS	TARGET	FOUND
06/04/92	SPX*ALS2B*38	34480*CLP90	THALLIUM	90.8	85-115	MG/KG-DRY	25.0	22.7
06/04/92	SPX*ALS2B*39	34480*CLP90	THALLIUM	88.3	85-115	MG/KG-DRY	20.5	18.1
06/04/92	SPX*ALS2B*40	34480*CLP90	THALLIUM	92.5	85-115	MG/KG-DRY	21.2	19.6
06/04/92	SPX*ALS2B*41	34480*CLP90	THALLIUM	91.2	85-115	MG/KG-DRY	21.7	19.8
06/04/92	SPX*ALS2B*42	34480*CLP90	THALLIUM	95.1	85-115	MG/KG-DRY	22.6	21.5
06/04/92	SPX*ALS2B*43	34480*CLP90	THALLIUM	92.1	85-115	MG/KG-DRY	22.7	20.9
06/04/92	SPX*ALS2BD*43	34480*CLP90	THALLIUM	92.8	85-115	MG/KG-DRY	23.5	21.8
06/04/92	SPX*ALS2B*73	34480*CLP90	THALLIUM	91.5	85-115	MG/KG-DRY	21.2	19.4
06/04/92	SPX*ALS2B*74	34480*CLP90	THALLIUM	91.1	85-115	MG/KG-DRY	21.3	19.4
06/04/92	SPX*ALS2B*75	34480*CLP90	THALLIUM	90.6	85-115	MG/KG-DRY	23.4	21.2
06/04/92	SPX*ALS2B*76	34480*CLP90	THALLIUM	92.0	85-115	MG/KG-DRY	22.4	20.6
06/04/92	SPX*ALS2B*77	34480*CLP90	THALLIUM	92.6	85-115	MG/KG-DRY	20.4	18.9
06/04/92	SPX*ALS2B*78	34480*CLP90	THALLIUM	95.0	85-115	MG/KG-DRY	24.1	22.9
06/04/92	SPX*ALS2B*79	34480*CLP90	THALLIUM	89.8	85-115	MG/KG-DRY	24.6	22.1
06/04/92	SPX*ALS2B*80	34480*CLP90	THALLIUM	95.8	85-115	MG/KG-DRY	23.8	22.8
06/04/92	SPX*ALS2B*81	34480*CLP90	THALLIUM	94.0	85-115	MG/KG-DRY	23.5	22.1
06/04/92	SPX*ALS2BD*81	34480*CLP90	THALLIUM	94.0	85-115	MG/KG-DRY	23.4	22.0
06/04/92	SPX*ALS2B*83	34480*CLP90	THALLIUM	95.6	85-115	MG/KG-DRY	20.4	19.5
06/04/92	SPX*ALS2B*84	34480*CLP90	THALLIUM	96.5	85-115	MG/KG-DRY	19.8	19.1
06/04/92	SPX*ALS2B*85	34480*CLP90	THALLIUM	100.5	85-115	MG/KG-DRY	21.6	21.7
06/04/92	SPX*ALS2B*86	34480*CLP90	THALLIUM	88.8	85-115	MG/KG-DRY	23.3	20.7

ESE BATCH : G28450

Environmental Science and Engineering Analytical Services
Computer QC Checks

Batch No.: G28450 Analysis Date: 06/04/92 Analyst: GEORGE HOUSTON

	Yes	"Exceptions" No	Comment / Corrective Action
Analysis holding time within criteria?	X		
Extract holding time within criteria?	X		
ICB present?	X		
ICB within acceptance criteria?	X		
CCB present?	X		
CCB within acceptance criteria?	X		
ICV present?	X		
ICV within acceptance criteria?	X		
CCV present?	X		
CCV within acceptance criteria?	X		
Method blank present?	X		
Method blank within acceptance criteria?	X		
LCS present?	X		
LCS within acceptance criteria?	X		
Sample matrix spike present?	X		
Sample matrix spike within acceptance criteria?	X		
Sample replicate present?	X		
Sample replicate within acceptance criteria?	X		
Analytical spike present?	X		
Analytical spike within acceptance criteria?		X	34480*CLP

Note: Any "NO" answer requires a comment.

OVERRIDE COMMENTS

B:ANALYTICAL SPIKE NOT WITHIN
ACCEPTANCE CRITERIA.
L:POSSIBLE MATRIX INTERFERRENCE.
MFB 6-12-92

ESE BATCH : G28878
CLASSIFICATION : THALLIUM - CLP SOW 3/90

STATUS : FINAL

METHOD BLANK CORRECTION METHOD : NONE

FIELD GRP	PROJECT NUMBER	PROJECT NAME	LAB COORDINATOR
ALS2B	3914042 0201	JMM/ALAMEDA CTO-121	JACKIE HARGROVE-ELLI

SAMPLE CODE	CLIENT ID	DATE ANALYZED	TIME ANALYZED
ALS2B*14	W05-01		
ALS2B*15	W05-02		
ALS2B*16	W05-03		
ALS2B*17	W05-04		
ALS2B*44	B-05PS-01		
ALS2B*45	B-05PS-01		
ALS2B*46	B-05PS-01		
ALS2B*48	B-05PS-02		
ALS2B*49	B-05PS-02		
ALS2B*50	B-05PS-03		
ALS2B*52	B-05PS-04		
ALS2B*53	B-05PS-04		
ALS2B*54	B-05PS-05		
ALS2B*55	B-05PS-05		
ALS2B*68	05PS-DUP1	06/19/92	
ALS2B*70	B-05SP-01		
ALS2B*71	B-05WT-01		
ALS2B*72	B-05WT-02		
ALS2B*82	B-05BS-02		

ESE BATCH : G28878

Initial Calibration Blank Summary

DATE	SAMPLE	STORET	PARAMETER	UNITS	FOUND
06/18/92	ICB*QC*1	34480*CLP90	THALLIUM	MG/KG-DRY	ND

Inuing Calibration Blank Sample Summary

DATE	SAMPLE	STORET	PARAMETER	UNITS	FOUND
06/18/92	CCB*QC*1	34480*CLP90	THALLIUM	MG/KG-DRY	0.300
06/18/92	CCB*QC*2	34480*CLP90	THALLIUM	MG/KG-DRY	0.500
06/18/92	CCB*QC*3	34480*CLP90	THALLIUM	MG/KG-DRY	ND
06/18/92	CCB*QC*4	34480*CLP90	THALLIUM	MG/KG-DRY	0.200
06/18/92	CCB*QC*5	34480*CLP90	THALLIUM	MG/KG-DRY	ND
06/18/92	CCB*QC*6	34480*CLP90	THALLIUM	MG/KG-DRY	0.100
06/18/92	CCB*QC*7	34480*CLP90	THALLIUM	MG/KG-DRY	ND

Initial Calibration Verification Sample Summary

DATE	SAMPLE	STORET	PARAMETER	UNITS	TARGET	FOUND	%RECV	RECV CRIT
06/18/92	ICV*PE PURE*1	34480*CLP90	THALLIUM	MG/KG-DRY	20.0	19.4	97.0	90-110
06/18/92	ICV*PE PURE*2	34480*CLP90	THALLIUM	MG/KG-DRY	20.0	19.1	95.5	90-110

Continuing Calibration Verification Sample Summary

DATE	SAMPLE	STORET	PARAMETER	UNITS	TARGET	FOUND	%RECV	RECV CRIT
06/18/92	CCV*QC*1	34480*CLP90	THALLIUM	MG/KG-DRY	50.0	47.1	94.2	90-110
06/18/92	CCV*QC*2	34480*CLP90	THALLIUM	MG/KG-DRY	50.0	47.7	95.4	90-110
06/18/92	CCV*QC*3	34480*CLP90	THALLIUM	MG/KG-DRY	50.0	47.0	94.0	90-110
06/18/92	CCV*QC*4	34480*CLP90	THALLIUM	MG/KG-DRY	50.0	46.8	93.6	90-110
06/18/92	CCV*QC*5	34480*CLP90	THALLIUM	MG/KG-DRY	50.0	47.1	94.2	90-110
06/18/92	CCV*QC*6	34480*CLP90	THALLIUM	MG/KG-DRY	50.0	47.1	94.2	90-110
06/18/92	CCV*QC*7	34480*CLP90	THALLIUM	MG/KG-DRY	50.0	47.8	95.6	90-110

Method Blank Sample Summary

DATE	SAMPLE	STORET	PARAMETER	UNITS	FOUND
06/18/92	MB*QC*1	34480*CLP90	THALLIUM	MG/KG-DRY	ND
06/18/92	MB*QC*2	34480*CLP90	THALLIUM	MG/KG-DRY	ND

Laboratory Control Sample Summary

	SAMPLE	STORET	PARAMETER	%RECV	RECV CRIT	UNITS	TARGET	FOUND
3/92	LCS*ESE*1	34480*CLP90	THALLIUM	94.0	80-120	MG/KG-DRY	9.82	9.23
06/18/92	LCS*ESE*2	34480*CLP90	THALLIUM	96.8	80-120	MG/KG-DRY	9.44	9.14

Sample Matrix Spike Recovery Summary

DATE	SAMPLE	STORET	PARAMETER	%RECV	RECV CRIT	UNSPIKED	UNITS	TARGET	FOUND	RPD
06/18/92	SPM1*ALS2B*68	34480*CLP90	THALLIUM	90.6	75-125	0.0	MG/KG-DRY	11.7	10.6	

Replicate Analysis Sample Summary

DATE	SAMPLE	STORET	PARAMETER	UNITS	REP #1	REP #2	RPD	RPD CRIT
06/18/92	RP*ALS2B*68	34480*CLP90	THALLIUM	MG/KG-DRY	<0.412	<0.378	8.61	20

Spike into Matrix Recovery Summary

DATE	SAMPLE	STORET	PARAMETER	%RECV	RECV CRIT	UNITS	TARGET	FOUND
06/18/92	SPX*MB*1	34480*CLP90	THALLIUM	96.6	85-115	MG/KG-DRY	100.0	96.6
06/18/92	SPX*MB*2	34480*CLP90	THALLIUM	96.2	85-115	MG/KG-DRY	100.0	96.2
06/18/92	SPX*ESE*1	34480*CLP90	THALLIUM	99.0	85-115	MG/KG-DRY	19.6	19.4
06/18/92	SPX*ESE*2	34480*CLP90	THALLIUM	100.0	85-115	MG/KG-DRY	18.9	18.9
06/18/92	SPX*ALS2B*14	34480*CLP90	THALLIUM	95.5	85-115	MG/KG-DRY	111	106
06/18/92	SPX*ALS2B*15	34480*CLP90	THALLIUM	97.6	85-115	MG/KG-DRY	20.5	20.0
06/18/92	SPX*ALS2B*16	34480*CLP90	THALLIUM	90.4	85-115	MG/KG-DRY	22.9	20.7
06/18/92	SPX*ALS2B*17	34480*CLP90	THALLIUM	96.6	85-115	MG/KG-DRY	29.7	28.7
06/18/92	SPX*ALS2B*44	34480*CLP90	THALLIUM	93.0	85-115	MG/KG-DRY	21.3	19.8
06/18/92	SPX*ALS2B*45	34480*CLP90	THALLIUM	93.9	85-115	MG/KG-DRY	23.0	21.6
06/18/92	SPX*ALS2B*46	34480*CLP90	THALLIUM	95.1	85-115	MG/KG-DRY	24.4	23.2
06/18/92	SPX*ALS2B*48	34480*CLP90	THALLIUM	95.6	85-115	MG/KG-DRY	22.5	21.5
06/18/92	SPX*ALS2B*49	34480*CLP90	THALLIUM	94.1	85-115	MG/KG-DRY	22.2	20.9
06/18/92	SPX*ALS2B*50	34480*CLP90	THALLIUM	93.4	85-115	MG/KG-DRY	21.2	19.8
06/18/92	SPX*ALS2B*52	34480*CLP90	THALLIUM	92.0	85-115	MG/KG-DRY	21.2	19.5
06/18/92	SPX*ALS2B*53	34480*CLP90	THALLIUM	91.5	85-115	MG/KG-DRY	22.4	20.5
06/18/92	SPX*ALS2B*54	34480*CLP90	THALLIUM	93.4	85-115	MG/KG-DRY	22.7	21.2
/92	SPX*ALS2B*55	34480*CLP90	THALLIUM	98.7	85-115	MG/KG-DRY	22.7	22.4
92	SPX*ALS2B*68	34480*CLP90	THALLIUM	95.9	85-115	MG/KG-DRY	24.2	23.2
/92	SPX*ALS2BD*68	34480*CLP90	THALLIUM	98.2	85-115	MG/KG-DRY	22.2	21.8
06/18/92	SPX*ALS2B*70	34480*CLP90	THALLIUM	93.5	85-115	MG/KG-DRY	21.5	20.1
06/18/92	SPX*ALS2B*71	34480*CLP90	THALLIUM	91.3	85-115	MG/KG-DRY	20.8	19.0

CSC BATCH : 62878

Spike into Matrix Recovery Summary

DATE	SAMPLE	STORET	PARAMETER	%RECV	RECV CRIT	UNITS	TARGET	FOUND
06/18/92	SPX*ALS2B*72	34480*CLP90	THALLIUM	92.4	85-115	MG/KG-DRY	23.7	21.9
06/18/92	SPX*ALS2B*82	34480*CLP90	THALLIUM	91.1	85-115	MG/KG-DRY	21.3	19.4

GROUNDWATER QC

Environmental Science and Engineering, Inc.

SAMPLE IDENTIFICATION CROSS REFERENCE, METHODOLOGY, AND CHRONICLE FOR JMM/ALAMEDA NAS COT-121 MOD. GROUNDWATERS

07.12.92

SAMPLE ID	STATION ID	COLL. DATE	CLASSIFICATION	EXTRACTION DATE	ANALYSIS DATE	(DAYS) COLL. TO EXTR.	EXTR. TO ANA.	COLL. TO ANA.	ESE Batch
ALW2B*14	B-05PS-02	06/03/92	VOLATILE ORGANIC CMPDS - CLP SOW 2/88	NA	06/12/92			9	G28969
			TAL METALS - CLP SOW 3/90	06/17/92	06/18/92	14	1	15	G28839
			ARSENIC - CLP SOW 3/90	06/17/92	06/22/92	14	5	19	G28986
			LEAD - CLP SOW 3/90	06/23/92	06/24/92	20	1	21	G29118
			THALLIUM - CLP SOW 3/90	06/17/92	06/19/92	14	2	16	G28966
			SELENIUM - CLP SOW 3/90	06/17/92	06/19/92	14	2	16	G28929
			MERCURY - CLP SOW 3/90	06/16/92	06/17/92	13	1	14	G28781
			CYANIDE - CLP SOW 3/90	06/17/92	06/17/92	14	0	14	G29034
			TOTAL DISSOLVED RESIDUE, E160.1	NA	06/09/92			6	G28677
			HEXAVALENT CHROMIUM - SW7196	NA	06/04/92			1	G28497
ALW2B*15	B-05PS-03	06/03/92	VOLATILE ORGANIC CMPDS - CLP SOW 2/88	NA	06/12/92			9	G28969
			TAL METALS - CLP SOW 3/90	06/17/92	06/18/92	14	1	15	G28839
			ARSENIC - CLP SOW 3/90	06/17/92	06/25/92	14	8	22	G28986
			LEAD - CLP SOW 3/90	06/23/92	06/24/92	20	1	21	G29118
			THALLIUM - CLP SOW 3/90	06/17/92	06/19/92	14	2	16	G28966
			SELENIUM - CLP SOW 3/90	06/17/92	06/19/92	14	2	16	G28929
			MERCURY - CLP SOW 3/90	06/16/92	06/17/92	13	1	14	G28781
			CYANIDE - CLP SOW 3/90	06/17/92	06/17/92	14	0	14	G29034
			TOTAL DISSOLVED RESIDUE, E160.1	NA	06/09/92			6	G28677
			HEXAVALENT CHROMIUM - SW7196	NA	06/04/92			1	G28497
ALW2B*16	B-05PS-04	06/03/92	VOLATILE ORGANIC CMPDS - CLP SOW 2/88	NA	06/12/92			9	G28969
			TAL METALS - CLP SOW 3/90	06/17/92	06/18/92	14	1	15	G28839
			ARSENIC - CLP SOW 3/90	06/17/92	06/22/92	14	5	19	G28986
			LEAD - CLP SOW 3/90	06/23/92	06/24/92	20	1	21	G29118
			THALLIUM - CLP SOW 3/90	06/17/92	06/19/92	14	2	16	G28966
			SELENIUM - CLP SOW 3/90	06/17/92	06/19/92	14	2	16	G28929
			MERCURY - CLP SOW 3/90	06/16/92	06/17/92	13	1	14	G28781
			CYANIDE - CLP SOW 3/90	06/17/92	06/17/92	14	0	14	G29034
			TOTAL DISSOLVED RESIDUE, E160.1	NA	06/09/92			6	G28677
			HEXAVALENT CHROMIUM - SW7196	NA	06/04/92			1	G28497
ALW2B*17	B-05PS-05	06/03/92	VOLATILE ORGANIC CMPDS - CLP SOW 2/88	NA	06/12/92			9	G28969
			TAL METALS - CLP SOW 3/90	06/17/92	06/18/92	14	1	15	G28839
			ARSENIC - CLP SOW 3/90	06/17/92	06/23/92	14	6	20	G28986
			LEAD - CLP SOW 3/90	06/23/92	06/24/92	20	1	21	G29118
			THALLIUM - CLP SOW 3/90	06/17/92	06/19/92	14	2	16	G28966
			SELENIUM - CLP SOW 3/90	06/17/92	06/19/92	14	2	16	G28929
			MERCURY - CLP SOW 3/90	06/16/92	06/17/92	13	1	14	G28781
			CYANIDE - CLP SOW 3/90	06/17/92	06/17/92	14	0	14	G29034
			TOTAL DISSOLVED RESIDUE, E160.1	NA	06/09/92			6	G28677
			HEXAVALENT CHROMIUM - SW7196	NA	06/04/92			1	G28497
ALW2B*12	EB3	06/03/92	VOLATILE ORGANIC CMPDS - CLP SOW 2/88	NA	06/12/92			9	G28969
			TAL METALS - CLP SOW 3/90	06/17/92	06/18/92	14	1	15	G28839
			ARSENIC - CLP SOW 3/90	06/17/92	06/22/92	14	5	19	G28986
			LEAD - CLP SOW 3/90	06/23/92	06/24/92	20	1	21	G29118
			THALLIUM - CLP SOW 3/90	06/17/92	06/19/92	14	2	16	G28966
			SELENIUM - CLP SOW 3/90	06/17/92	06/19/92	14	2	16	G28929
			MERCURY - CLP SOW 3/90	06/16/92	06/17/92	13	1	14	G28781
			CYANIDE - CLP SOW 3/90	06/17/92	06/17/92	14	0	14	G29034
			TOTAL DISSOLVED RESIDUE, E160.1	NA	06/09/92			6	G28677
			HEXAVALENT CHROMIUM - SW7196	NA	06/04/92			1	G28497
ALW2B*6	TB1	06/03/92	VOLATILE ORGANIC CMPDS - CLP SOW 2/88	NA	06/12/92			9	G28969
ALW2B*13	B-05PS-01	06/04/92	VOLATILE ORGANIC CMPDS - CLP SOW 2/88	NA	06/12/92			8	G28969
			TAL METALS - CLP SOW 3/90	06/17/92	06/18/92	13	1	14	G28839
			ARSENIC - CLP SOW 3/90	06/17/92	06/22/92	13	5	18	G28986
			LEAD - CLP SOW 3/90	06/23/92	06/24/92	19	1	20	G29118
			THALLIUM - CLP SOW 3/90	06/17/92	06/19/92	13	2	15	G28966
			SELENIUM - CLP SOW 3/90	06/17/92	06/19/92	13	2	15	G28929

SAMPLE IDENTIFICATION CROSS REFERENCE, METHODOLOGY, AND CHRONICLE FOR JMM ALAMEDA NAS COT-121 MOD. GROUNDWATERS

07/12/92

SAMPLE ID	STATION ID	COLL. DATE	CLASSIFICATION	EXTRACTION DATE	ANALYSIS DATE	(DAYS) COLL. TO EXTR.	EXTR. TO ANA.	COLL. TO ANA.	ESE Batch
ALW2B*13	B-05PS-01	06/04/92	MERCURY - CLP SOW 3/90	06/16/92	06/17/92	12	1	13	G28781
			CYANIDE - CLP SOW 3/90	06/17/92	06/17/92	13	0	13	G29034
			TOTAL DISSOLVED RESIDUE, E160.1	NA	06/09/92			5	G28677
			HEXAVALENT CHROMIUM - SW7196	NA	06/05/92			1	G28499
ALW2B*23	B-05PS-DUP	06/04/92	VOLATILE ORGANIC CMPDS - CLP SOW 2/88	NA	06/12/92			8	G28969
			TAL METALS - CLP SOW 3/90	06/17/92	06/18/92	13	1	14	G28839
			ARSENIC - CLP SOW 3/90	06/17/92	06/22/92	13	5	18	G28986
			LEAD - CLP SOW 3/90	06/23/92	06/24/92	19	1	20	G29118
			THALLIUM - CLP SOW 3/90	06/17/92	06/19/92	13	2	15	G28966
			SELENIUM - CLP SOW 3/90	06/17/92	06/19/92	13	2	15	G28929
			MERCURY - CLP SOW 3/90	06/16/92	06/17/92	12	1	13	G28781
			CYANIDE - CLP SOW 3/90	06/17/92	06/17/92	13	0	13	G29034
			TOTAL DISSOLVED RESIDUE, E160.1	NA	06/09/92			5	G28677
			HEXAVALENT CHROMIUM - SW7196	NA	06/05/92			1	G28499
ALW2B*24	B-05WT-01	06/04/92	VOLATILE ORGANIC CMPDS - CLP SOW 2/88	NA	06/16/92			12	G28942
			SEMIVOLATILE ORGANIC CMPDS-CLP SOW 2/88	06/11/92	06/16/92	7	5	12	G28952
			TAL METALS - CLP SOW 3/90	06/17/92	06/18/92	13	1	14	G28839
			ARSENIC - CLP SOW 3/90	06/17/92	06/23/92	13	6	19	G28986
			LEAD - CLP SOW 3/90	06/23/92	06/24/92	19	1	20	G29118
			THALLIUM - CLP SOW 3/90	06/17/92	06/19/92	13	2	15	G28966
			SELENIUM - CLP SOW 3/90	06/17/92	06/19/92	13	2	15	G28929
			MERCURY - CLP SOW 3/90	06/16/92	06/17/92	12	1	13	G28781
			CYANIDE - CLP SOW 3/90	06/17/92	06/17/92	13	0	13	G29034
			TOTAL DISSOLVED RESIDUE, E160.1	NA	06/09/92			5	G28677
			HEXAVALENT CHROMIUM - SW7196	NA	06/05/92			1	G28499
ALW2B*25	B-05WT-02	06/04/92	VOLATILE ORGANIC CMPDS - CLP SOW 2/88	NA	06/13/92			9	G28969
			SEMIVOLATILE ORGANIC CMPDS-CLP SOW 2/88						
			TAL METALS - CLP SOW 3/90	06/17/92	06/18/92	13	1	14	G28839
			ARSENIC - CLP SOW 3/90	06/17/92	06/22/92	13	5	18	G28986
			LEAD - CLP SOW 3/90	06/23/92	06/24/92	19	1	20	G29118
			THALLIUM - CLP SOW 3/90	06/17/92	06/19/92	13	2	15	G28966
			SELENIUM - CLP SOW 3/90	06/17/92	06/19/92	13	2	15	G28929
			MERCURY - CLP SOW 3/90	06/16/92	06/17/92	12	1	13	G28781
			CYANIDE - CLP SOW 3/90	06/17/92	06/17/92	13	0	13	G29034
			TOTAL DISSOLVED RESIDUE, E160.1	NA	06/09/92			5	G28677
			HEXAVALENT CHROMIUM - SW7196	NA	06/05/92			1	G28499
ALW2B*7	TB2	06/04/92	VOLATILE ORGANIC CMPDS - CLP SOW 2/88	NA	06/15/92			11	G28745
ALW2B*1	M-BG1-GW	06/11/92	ORGANOCHLORINE PESTS & PCB-CLP SOW 2/88	06/16/92	06/24/92	5	8	13	G29201
			VOLATILE ORGANIC CMPDS - CLP SOW 2/88	NA	06/17/92			6	G28942
			SEMIVOLATILE ORGANIC CMPDS-CLP SOW 2/88	06/18/92	06/24/92	7	6	13	G29136
			TAL METALS - CLP SOW 3/90	06/17/92	06/18/92	6	1	7	G28839
			ARSENIC - CLP SOW 3/90	06/17/92	06/22/92	6	5	11	G28986
			LEAD - CLP SOW 3/90	06/23/92	06/24/92	12	1	13	G29118
			THALLIUM - CLP SOW 3/90	06/17/92	06/19/92	6	2	8	G28966
			SELENIUM - CLP SOW 3/90	06/17/92	06/19/92	6	2	8	G28929
			MERCURY - CLP SOW 3/90	06/16/92	06/17/92	5	1	6	G28781
			TOTAL ORGANIC CARBON - E415.1	NA	07/09/92			28	G29516
			PETROLEUM HYDROCARBONS-E418.1	06/24/92	06/24/92	13	0	13	G29061
			OIL & GREASE - E413.2	06/24/92	06/24/92	13	0	13	G29061
			CYANIDE - CLP SOW 3/90	06/24/92	06/24/92	13	0	13	G29243
			COMMON ANIONS-E300	NA	06/23/92			12	G29096
			FLUORIDE - E340.2	NA	06/24/92			13	G29192
			NO2 + NO3 TECH. - E353.2	NA	06/22/92			11	G29087
			HARDNESS - EPA 130.2	NA	06/25/92			14	G29174
			TOTAL DISSOLVED RESIDUE, E160.1	NA	06/16/92			5	G28752
			ACIDITY, E305.1	NA	06/23/92			12	G29020
			ALKALINITY, SM403		06/24/92			13	G29093

SAMPLE IDENTIFICATION CROSS REFERENCE, METHODOLOGY, AND CHRONICLE FOR JMM/ALAMEDA NAS COT-121 MOD. GROUNDWATERS
07/12/92

SAMPLE ID	STATION ID	COLL. DATE	CLASSIFICATION	EXTRACTION DATE	ANALYSIS DATE	(DAYS) COLL. TO EXTR.	EXTR. TO ANA.	COLL. TO ANA.	ESE Batch
			C.O.D	NA	06/23/92			12	G29010
			BOD,5-DAY - E405.1	06/13/92	06/18/92	2	5	7	G28936
			EDB - E504	06/23/92	06/23/92	12	0	12	G29043
			CHLORINATED HERBICIDES-SW8150	06/17/92	06/22/92	6	5	11	G29114
			MONURON AND DIURON - EPA 632	06/16/92	06/25/92	5	9	14	G29154
			ORGANOPHOSPHORUS PESTICIDES-SW3510/8140	06/16/92	06/30/92	5	14	19	G29337
			GLYPHOSATE - EPA 547-MOD.	06/22/92	06/22/92	11	0	11	G29003
ALW2B*8	TB3	06/11/92	VOLATILE ORGANIC CMPDS - CLP SOW 2/88	NA	06/17/92			6	G28942
ALW2B*2	M-BG2-GW	06/12/92	ORGANOCHLORINE PESTS & PCB-CLP SOW 2/88	06/16/92	06/25/92	4	9	13	G29201
			VOLATILE ORGANIC CMPDS - CLP SOW 2/88	NA	06/17/92			5	G28942
			SEMIVOLATILE ORGANIC CMPDS-CLP SOW 2/88	06/18/92	06/24/92	6	6	12	G29136
			TAL METALS - CLP SOW 3/90	06/17/92	06/18/92	5	1	6	G28839
			ARSENIC - CLP SOW 3/90	06/17/92	06/22/92	5	5	10	G28986
			LEAD - CLP SOW 3/90	06/23/92	06/24/92	11	1	12	G29118
			THALLIUM - CLP SOW 3/90	06/17/92	06/19/92	5	2	7	G28966
			SELENIUM - CLP SOW 3/90	06/17/92	06/19/92	5	2	7	G28929
			MERCURY - CLP SOW 3/90	06/16/92	06/17/92	4	1	5	G28781
			TOTAL ORGANIC CARBON - E415.1	NA	07/09/92			27	G29516
			PETROLEUM HYDROCARBONS-E418.1	06/24/92	06/24/92	12	0	12	G29061
			OIL & GREASE - E413.2	06/24/92	06/24/92	12	0	12	G29061
			CYANIDE - CLP SOW 3/90	06/24/92	06/24/92	12	0	12	G29243
			COMMON ANIONS-E300	NA	06/23/92			11	G29096
			FLUORIDE - E340.2	NA	06/24/92			12	G29192
			NO2 + NO3 TECH. - E353.2	NA	06/22/92			10	G29087
			HARDNESS - EPA 130.2	NA	06/25/92			13	G29174
			TOTAL DISSOLVED RESIDUE, E160.1	NA	06/16/92			4	G28752
			ACIDITY, E305.1	NA	06/23/92			11	G29020
			ALKALINITY, SM403	NA	06/24/92			12	G29093
			C.O.D	NA	06/23/92			11	G29010
			BOD,5-DAY - E405.1	06/13/92	06/18/92	1	5	6	G28936
			EDB - E504	06/23/92	06/23/92	11	0	11	G29043
			CHLORINATED HERBICIDES-SW8150	06/17/92	06/22/92	5	5	10	G29114
			MONURON AND DIURON - EPA 632	06/16/92	06/25/92	4	9	13	G29154
			ORGANOPHOSPHORUS PESTICIDES-SW3510/8140	06/16/92	06/30/92	4	14	18	G29337
			GLYPHOSATE - EPA 547-MOD.	06/22/92	06/23/92	10	1	11	G29003
ALW2B*3	M-BG3-GW	06/12/92	ORGANOCHLORINE PESTS & PCB-CLP SOW 2/88	06/16/92	06/25/92	4	9	13	G29201
			VOLATILE ORGANIC CMPDS - CLP SOW 2/88	NA	06/17/92			5	G28942
			SEMIVOLATILE ORGANIC CMPDS-CLP SOW 2/88	06/18/92	06/24/92	6	6	12	G29136
			TAL METALS - CLP SOW 3/90	06/17/92	06/18/92	5	1	6	G28839
			ARSENIC - CLP SOW 3/90	06/17/92	06/22/92	5	5	10	G28986
			LEAD - CLP SOW 3/90	06/23/92	06/24/92	11	1	12	G29118
			THALLIUM - CLP SOW 3/90	06/17/92	06/19/92	5	2	7	G28966
			SELENIUM - CLP SOW 3/90	06/17/92	06/19/92	5	2	7	G28929
			MERCURY - CLP SOW 3/90	06/16/92	06/17/92	4	1	5	G28781
			TOTAL ORGANIC CARBON - E415.1	NA	07/09/92			27	G29516
			PETROLEUM HYDROCARBONS-E418.1	06/24/92	06/24/92	12	0	12	G29061
			OIL & GREASE - E413.2	06/24/92	06/24/92	12	0	12	G29061
			CYANIDE - CLP SOW 3/90	06/24/92	06/24/92	12	0	12	G29243
			COMMON ANIONS-E300	NA	06/23/92			11	G29096
			FLUORIDE - E340.2	NA	06/24/92			12	G29192
			NO2 + NO3 TECH. - E353.2	NA	06/22/92			10	G29087
			HARDNESS - EPA 130.2	NA	06/25/92			13	G29174
			TOTAL DISSOLVED RESIDUE, E160.1	NA	06/16/92			4	G28752
			ACIDITY, E305.1	NA	06/23/92			11	G29020
			ALKALINITY, SM403	NA	06/24/92			12	G29093
			C.O.D	NA	06/23/92			11	G29010
			BOD,5-DAY - E405.1	06/13/92	06/18/92	1	5	6	G28936

SAMPLE IDENTIFICATION CROSS REFERENCE, METHODOLOGY, AND CHRONICLE FOR JMM/ALAMEDA NAS COT-121 MOD. GROUNDWATERS

07 12 92

SAMPLE ID	STATION ID	COLL. DATE	CLASSIFICATION	EXTRACTION DATE	ANALYSIS DATE	(DAYS) COLL. TO EXTR.	EXTR. TO ANA.	COLL. TO ANA.	ESE Batch
ALW2B*3	M-BG3-GW	06/12/92	EDB - E504	06/23/92	06/23/92	11	0	11	G29043
			CHLORINATED HERBICIDES-SW8150	06/17/92	06/22/92	5	5	10	G29114
			MONURON AND DIURON - EPA 632	06/16/92	06/26/92	4	10	14	G29154
			ORGANOPHOSPHORUS PESTICIDES-SW3510/8140	06/16/92	06/30/92	4	14	18	G29337
			GLYPHOSATE - EPA 547-MOD.	06/22/92	06/23/92	10	1	11	G29003
ALW2B*4	M-BG4-GW	06/12/92	ORGANOCHLORINE PESTS & PCB-CLP SOW 2/88	06/16/92	06/25/92	4	9	13	G29201
			VOLATILE ORGANIC CMPDS - CLP SOW 2/88	NA	06/17/92			5	G28942
			SEMIVOLATILE ORGANIC CMPDS-CLP SOW 2/88	06/18/92	06/24/92	6	6	12	G29136
			TAL METALS - CLP SOW 3/90	06/17/92	06/18/92	5	1	6	G28839
			ARSENIC - CLP SOW 3/90	06/17/92	06/22/92	5	5	10	G28986
			LEAD - CLP SOW 3/90	06/23/92	06/24/92	11	1	12	G29118
			THALLIUM - CLP SOW 3/90	06/17/92	06/19/92	5	2	7	G28966
			SELENIUM - CLP SOW 3/90	06/17/92	06/19/92	5	2	7	G28929
			MERCURY - CLP SOW 3/90	06/16/92	06/17/92	4	1	5	G28781
			TOTAL ORGANIC CARBON - E415.1	NA	07/09/92			27	G29516
			PETROLEUM HYDROCARBONS-E418.1	06/24/92	06/24/92	12	0	12	G29061
			OIL & GREASE - E413.2	06/24/92	06/24/92	12	0	12	G29061
			CYANIDE - CLP SOW 3/90	06/24/92	06/24/92	12	0	12	G29243
			COMMON ANIONS-E300	NA	06/23/92			11	G29096
			FLUORIDE - E340.2	NA	06/24/92			12	G29192
			NO2 + NO3 TECH. - E353.2	NA	06/22/92			10	G29087
			HARDNESS - EPA 130.2	NA	06/25/92			13	G29174
			TOTAL DISSOLVED RESIDUE, E160.1	NA	06/16/92			4	G28752
			ACIDITY, E305.1	NA	06/23/92			11	G29020
			ALKALINITY, SM403	NA	06/24/92			12	G29093
			C.O.D	NA	06/23/92			11	G29010
			BOD,5-DAY - E405.1	06/13/92	06/18/92	1	5	6	G28936
			EDB - E504	06/23/92	06/23/92	11	0	11	G29043
			CHLORINATED HERBICIDES-SW8150	06/17/92	06/22/92	5	5	10	G29114
			MONURON AND DIURON - EPA 632	06/16/92	06/26/92	4	10	14	G29154
			ORGANOPHOSPHORUS PESTICIDES-SW3510/8140	06/16/92	06/30/92	4	14	18	G29337
			GLYPHOSATE - EPA 547-MOD.	06/22/92	06/23/92	10	1	11	G29003
ALW2B*10	EB1	06/12/92	ORGANOCHLORINE PESTS & PCB-CLP SOW 2/88	06/16/92	06/25/92	4	9	13	G29201
			VOLATILE ORGANIC CMPDS - CLP SOW 2/88	NA	06/17/92			5	G28942
			SEMIVOLATILE ORGANIC CMPDS-CLP SOW 2/88	06/18/92	06/24/92	6	6	12	G29136
			TAL METALS - CLP SOW 3/90	06/17/92	06/18/92	5	1	6	G28839
			ARSENIC - CLP SOW 3/90	06/17/92	06/22/92	5	5	10	G28986
			LEAD - CLP SOW 3/90	06/23/92	06/24/92	11	1	12	G29118
			THALLIUM - CLP SOW 3/90	06/17/92	06/19/92	5	2	7	G28966
			SELENIUM - CLP SOW 3/90	06/17/92	06/19/92	5	2	7	G28929
			MERCURY - CLP SOW 3/90	06/16/92	06/17/92	4	1	5	G28781
			TOTAL ORGANIC CARBON - E415.1	NA	07/09/92			27	G29516
			PETROLEUM HYDROCARBONS-E418.1	06/24/92	06/24/92	12	0	12	G29061
			OIL & GREASE - E413.2	06/24/92	06/24/92	12	0	12	G29061
			CYANIDE - CLP SOW 3/90	06/24/92	06/24/92	12	0	12	G29243
			COMMON ANIONS-E300	NA	06/23/92			11	G29096
			FLUORIDE - E340.2	NA	06/24/92			12	G29192
			NO2 + NO3 TECH. - E353.2	NA	06/22/92			10	G29087
			HARDNESS - EPA 130.2	NA	06/25/92			13	G29174
			TOTAL DISSOLVED RESIDUE, E160.1	NA	06/16/92			4	G28752
			ACIDITY, E305.1	NA	06/23/92			11	G29020
			ALKALINITY, SM403	NA	06/24/92			12	G29093
			C.O.D	NA	06/23/92			11	G29010
			BOD,5-DAY - E405.1	06/13/92	06/18/92	1	5	6	G28936
			EDB - E504	06/23/92	06/23/92	11	0	11	G29043
			CHLORINATED HERBICIDES-SW8150	06/17/92	06/22/92	5	5	10	G29114
			MONURON AND DIURON - EPA 632	06/16/92	06/26/92	4	10	14	G29154

SAMPLE ID	STATION ID	COLL. DATE	CLASSIFICATION	EXTRACTION DATE	ANALYSIS DATE	(DAYS) COLL. TO EXTR.	EXTR. TO ANA.	COLL. TO ANA.	ESE Batch
ALW2B*10	EB1	06/12/92	ORGANOPHOSPHORUS PESTICIDES-SW3510/8140	06/16/92	06/30/92	4	14	18	G29337
			GLYPHOSATE - EPA 547-MOD.	06/22/92	06/23/92	10	1	11	G29003
ALW2B*9	TB4	06/12/92	VOLATILE ORGANIC CMPDS - CLP SOW 2/88	NA	06/17/92			5	G28942
ALW2B*5	M-BG-DUP1	06/15/92	VOLATILE ORGANIC CMPDS - CLP SOW 2/88	NA	06/17/92			2	G28942
			SEMIVOLATILE ORGANIC CMPDS-CLP SOW 2/88	06/22/92	06/24/92	7	2	9	G29205
			TAL METALS - CLP SOW 3/90	06/24/92	06/24/92	9	0	9	G29073
			ARSENIC - CLP SOW 3/90	06/23/92	07/02/92	8	9	17	G29338
			LEAD - CLP SOW 3/90	06/23/92	06/24/92	8	1	9	G29118
			THALLIUM - CLP SOW 3/90	06/23/92	07/03/92	8	10	18	G29330
			SELENIUM - CLP SOW 3/90	06/23/92	07/02/92	8	9	17	G29329
			MERCURY - CLP SOW 3/90	06/26/92	06/29/92	11	3	14	G29207
			CYANIDE - CLP SOW 3/90	06/24/92	06/24/92	9	0	9	G29243
			COMMON ANIONS-E300	NA	06/23/92			8	G29096
			FLUORIDE - E340.2	NA	06/24/92			9	G29192
			HARDNESS - EPA 130.2	NA	06/30/92			15	G29327
			TOTAL DISSOLVED RESIDUE, E160.1	NA	06/18/92			3	G28877
			ACIDITY, E305.1	NA	06/23/92			8	G29020
			ALKALINITY, SM403	NA	06/24/92			9	G29093
			BOD,5-DAY - E405.1	06/17/92	06/23/92	2	6	8	G29090
ALW2B*11	EB2	06/15/92	ORGANOCHLORINE PESTS & PCB-CLP SOW 2/88	06/22/92	06/25/92	7	3	10	G29201
			VOLATILE ORGANIC CMPDS - CLP SOW 2/88	NA	06/17/92			2	G28942
			SEMIVOLATILE ORGANIC CMPDS-CLP SOW 2/88	06/22/92	06/25/92	7	3	10	G29205
			TAL METALS - CLP SOW 3/90	06/17/92	06/18/92	2	1	3	G28839
			ARSENIC - CLP SOW 3/90	06/17/92	06/22/92	2	5	7	G28986
			LEAD - CLP SOW 3/90	06/23/92	06/24/92	8	1	9	G29118
			THALLIUM - CLP SOW 3/90	06/17/92	06/19/92	2	2	4	G28966
			SELENIUM - CLP SOW 3/90	06/17/92	06/19/92	2	2	4	G28929
			MERCURY - CLP SOW 3/90	06/26/92	06/29/92	11	3	14	G29207
			TOTAL ORGANIC CARBON - E415.1	NA	07/09/92			24	G29516
			PETROLEUM HYDROCARBONS-E418.1	06/24/92	06/24/92	9	0	9	G29061
			OIL & GREASE - E413.2	06/24/92	06/24/92	9	0	9	G29061
			CYANIDE - CLP SOW 3/90	06/24/92	06/24/92	9	0	9	G29243
			COMMON ANIONS-E300	NA	06/23/92			8	G29096
			FLUORIDE - E340.2	NA	06/24/92			9	G29192
			NO2 + NO3 TECH. - E353.2	NA	06/24/92			9	G29099
			HARDNESS - EPA 130.2	NA	06/25/92			10	G29174
			TOTAL DISSOLVED RESIDUE, E160.1	NA	06/18/92			3	G28877
			ACIDITY, E305.1	NA	06/23/92			8	G29020
			ALKALINITY, SM403	NA	06/24/92			9	G29093
			C.O.D	NA	06/23/92			8	G29010
			BOD,5-DAY - E405.1	06/17/92	06/23/92	2	6	8	G29090
			EDB - E504	06/23/92	06/23/92	8	0	8	G29043
			CHLORINATED HERBICIDES-SW8150	06/22/92	06/25/92	7	3	10	G29117
			MONURON AND DIURON - EPA 632	06/22/92	06/26/92	7	4	11	G29154
			ORGANOPHOSPHORUS PESTICIDES-SW3510/8140	06/22/92	06/30/92	7	8	15	G29337
			GLYPHOSATE - EPA 547-MOD.	06/22/92	06/23/92	7	1	8	G29003
ALQ4*130	TB	06/15/92	VOLATILE ORGANIC CMPDS - CLP SOW 2/88	NA	06/17/92			2	G28942
ALW2B*26	B-05HW-01	06/15/92	VOLATILE ORGANIC CMPDS - CLP SOW 2/88	NA	06/17/92			2	G28942
			SEMIVOLATILE ORGANIC CMPDS-CLP SOW 2/88	06/22/92	06/25/92	7	3	10	G29205
			TAL METALS - CLP SOW 3/90	06/17/92	06/18/92	2	1	3	G28839
			ARSENIC - CLP SOW 3/90	06/17/92	06/22/92	2	5	7	G28986
			LEAD - CLP SOW 3/90	06/23/92	06/24/92	8	1	9	G29118
			THALLIUM - CLP SOW 3/90	06/17/92	06/19/92	2	2	4	G28966
			SELENIUM - CLP SOW 3/90	06/17/92	06/19/92	2	2	4	G28929
			MERCURY - CLP SOW 3/90	06/26/92	06/29/92	11	3	14	G29207
			CYANIDE - CLP SOW 3/90	06/24/92	06/24/92	9	0	9	G29243
			TOTAL DISSOLVED RESIDUE, E160.1	NA	06/18/92			3	G28877

SAMPLE IDENTIFICATION CROSS REFERENCE, METHODOLOGY, AND CHRONICLE FOR JMM ALAMEDA NAS COT-121 MOD. GROUNDWATERS
07/12/92

SAMPLE ID	STATION ID	COLL. DATE	CLASSIFICATION	EXTRACTION DATE	ANALYSIS DATE	(DAYS) COLL. TO EXTR.	EXTR. TO ANA.	COLL. TO ANA.	ESE Batch
			HEXAVALENT CHROMIUM - SW7196	NA	06/16/92			1	G29187
ALW2B*27	B-05BS-01	06/15/92	VOLATILE ORGANIC CMPDS - CLP SOW 2/88	NA	06/17/92			2	G28942
			SEMIVOLATILE ORGANIC CMPDS-CLP SOW 2/88	06/22/92	06/24/92	7	2	9	G29205
			TAL METALS - CLP SOW 3/90	06/17/92	06/18/92	2	1	3	G28839
			ARSENIC - CLP SOW 3/90	06/17/92	06/23/92	2	6	8	G28986
			LEAD - CLP SOW 3/90	06/23/92	06/24/92	8	1	9	G29118
			THALLIUM - CLP SOW 3/90	06/17/92	06/19/92	2	2	4	G28966
			SELENIUM - CLP SOW 3/90	06/17/92	06/19/92	2	2	4	G28929
			MERCURY - CLP SOW 3/90	06/26/92	06/29/92	11	3	14	G29207
			CYANIDE - CLP SOW 3/90	06/24/92	06/24/92	9	0	9	G29243
			TOTAL DISSOLVED RESIDUE, E160.1	NA	06/18/92			3	G28877
			HEXAVALENT CHROMIUM - SW7196	NA	06/16/92			1	G29187

Volatile Organic Compounds

ESE BATCH : G28745
CLASSIFICATION : VOLATILE ORGANIC CMPDS - CLP SOW 2/88

METHOD BLANK CORRECTION METHOD : NONE
USATHAMA LOT: INST

SAMPLE CODE	CLIENT ID	DATE ANALYZED	TIME ANALYZED
ALW28*7	TB2	06/15/92	11:40AM

ESE BATCH : G28745

Method Blank Sample Summary

DATE	SAMPLE	STORET	PARAMETER	UNITS	FOUND
06/15/92	MB*QC*0615	34418*CLP1	CHLOROMETHANE	UG/L	ND
06/15/92	MB*QC*0615	34413*CLP1	BROMOMETHANE	UG/L	ND
06/15/92	MB*QC*0615	39175*CLP1	VINYL CHLORIDE	UG/L	ND
06/15/92	MB*QC*0615	34311*CLP1	CHLOROETHANE	UG/L	ND
06/15/92	MB*QC*0615	34423*CLP1	METHYLENE CHLORIDE	UG/L	3.4
06/15/92	MB*QC*0615	81552*CLP1	ACETONE	UG/L	2.3
06/15/92	MB*QC*0615	77041*CLP1	CARBON DISULFIDE	UG/L	ND
06/15/92	MB*QC*0615	34501*CLP1	1,1-DICHLOROETHYLENE	UG/L	ND
06/15/92	MB*QC*0615	34496*CLP1	1,1-DICHLOROETHANE	UG/L	ND
06/15/92	MB*QC*0615	96469*CLP1	1,2-DICHLOROETHENE, TOTAL	UG/L	ND
06/15/92	MB*QC*0615	32106*CLP1	CHLOROFORM	UG/L	ND
06/15/92	MB*QC*0615	34531*CLP1	1,2-DICHLOROETHANE	UG/L	ND
06/15/92	MB*QC*0615	81595*CLP1	METHYL ETHYL KETONE	UG/L	ND
06/15/92	MB*QC*0615	34506*CLP1	1,1,1-TRICHL'ETHANE	UG/L	ND
06/15/92	MB*QC*0615	32102*CLP1	CARBON TETRACHLORIDE	UG/L	ND
06/15/92	MB*QC*0615	77057*CLP1	VINYL ACETATE	UG/L	ND
06/15/92	MB*QC*0615	32101*CLP1	BROMODICHLOROMETHANE	UG/L	ND
06/15/92	MB*QC*0615	34541*CLP1	1,2-DICHLOROPROPANE	UG/L	ND
06/15/92	MB*QC*0615	34704*CLP1	CIS-1,3-DICHLORO PROPENE	UG/L	ND
06/15/92	MB*QC*0615	39180*CLP1	TRICHLOROETHENE	UG/L	ND
06/15/92	MB*QC*0615	32105*CLP1	DIBROMOCHLOROMETHANE	UG/L	ND
06/15/92	MB*QC*0615	34511*CLP1	1,1,2-TRICHL'ETHANE	UG/L	ND
06/15/92	MB*QC*0615	34030*CLP1	BENZENE	UG/L	ND
06/15/92	MB*QC*0615	34699*CLP1	TRANS-1,3-DICHLORO PROPENE	UG/L	ND
06/15/92	MB*QC*0615	32104*CLP1	BROMOFORM	UG/L	ND
06/15/92	MB*QC*0615	81596*CLP1	METHYL ISOBUT'KETONE	UG/L	ND
06/15/92	MB*QC*0615	77103*CLP1	2-HEXANONE	UG/L	ND
06/15/92	MB*QC*0615	34475*CLP1	TETRACHLOROETHENE	UG/L	ND
06/15/92	MB*QC*0615	34516*CLP1	1,1,2,2-TETRACHLORO ETHANE	UG/L	ND
06/15/92	MB*QC*0615	34010*CLP1	TOLUENE	UG/L	ND
06/15/92	MB*QC*0615	34301*CLP1	CHLOROBENZENE	UG/L	ND
06/15/92	MB*QC*0615	34371*CLP1	ETHYLBENZENE	UG/L	ND
06/15/92	MB*QC*0615	77128*CLP1	STYRENE	UG/L	ND
06/15/92	MB*QC*0615	81551*CLP1	XYLENES,TOTAL	UG/L	ND

Standard Matrix Spike Recovery Summary

DATE	SAMPLE	STORET	PARAMETER	%RECV	RECV CRIT	UNITS	TARGET	FOUND
06/15/92	SP1*QC*1	34501*CLP1	1,1-DICHLOROETHYLENE	75	61-145	UG/L	10.0	7.5
06/15/92	SP1*QC*1	39180*CLP1	TRICHLOROETHENE	90	71-120	UG/L	10.0	9.0
06/15/92	SP1*QC*1	34030*CLP1	BENZENE	92	76-127	UG/L	10.0	9.2
06/15/92	SP1*QC*1	34010*CLP1	TOLUENE	100	76-125	UG/L	10.0	10.0
06/15/92	SP1*QC*1	34301*CLP1	CHLOROBENZENE	95	75-130	UG/L	10.0	9.5

Surrogate Spike Recovery Summary

DATE	SAMPLE	STORET	PARAMETER	UNITS	TARGET	FOUND	%RECV	RECV CRIT
06/15/92	MB*QC*0615	98812*SUR	1,2-DICHLOROETHANE-D(4)	UG/L	10.0	9.7	97	76-114
06/15/92	MB*QC*0615	98810*SUR	TOLUENE-D(8)	UG/L	10.0	10.0	100	85-115
06/15/92	MB*QC*0615	97947*SUR	BROMOFLUOROBENZENE	UG/L	10.0	9.4	94	86-115
06/15/92	DA*ALW2B*7	98812*SUR	1,2-DICHLOROETHANE-D(4)	UG/L	10.0	10.0	100	76-114
06/15/92	DA*ALW2B*7	98810*SUR	TOLUENE-D(8)	UG/L	10.0	9.9	99	85-115
06/15/92	DA*ALW2B*7	97947*SUR	BROMOFLUOROBENZENE	UG/L	10.0	9.5	95	86-115
06/15/92	SP1*QC*1	98812*SUR	1,2-DICHLOROETHANE-D(4)	UG/L	10.0	9.9	99	76-114
06/15/92	SP1*QC*1	98810*SUR	TOLUENE-D(8)	UG/L	10.0	10.0	100	85-115
06/15/92	SP1*QC*1	97947*SUR	BROMOFLUOROBENZENE	UG/L	10.0	9.2	92	86-115

ESE BATCH : G28745

Environmental Science and Engineering Analytical Services

Computer QC Checks

Batch No.: G28745 Analysis Date: 06/15/92 Analyst: DANIEL LUCAS

	Yes	"Exceptions" No	Comment / Corrective Action
Analysis holding time within criteria?	X		
Extract holding time within criteria?	X		
Method blank present?	X		
Method blank within acceptance criteria?	X		
Sample matrix spike present?		X	
Sample matrix spike within acceptance criteria?			
Surrogate present?	X		
Surrogate within acceptance criteria?	X		

Note: Any "NO" answer requires a comment.

OVERRIDE COMMENTS

PROB:SAMPLE MATRIX SPIKE NOT PRESENT.
EXPL:SAMPLE ANALYZED WAS A TRIP BLANK.

A MATRIX SPIKE AND A MATRIX SPIKE
DUPLICATE WAS ANALYZED ON THIS DAY
FOR A DIFFERENT PROJECT AND RE-
PORTED WITH A DIFFERENT BATCH.DL/6/17/92

OVERALL PROJECT REQUIREMENTS HAVE BEEN MET FOR THIS PROJECT/JMHE

ESE BATCH : G28942
CLASSIFICATION : VOLATILE ORGANIC CMPDS - CLP SOW 2/88

METHOD BLANK CORRECTION METHOD : NONE

SAMPLE CODE	CLIENT ID	DATE ANALYZED	TIME ANALYZED
ALW2B*8	TB3	06/17/92	11:42AM
ALQ4*130	TB	06/17/92	12:43PM
ALW2B*5	M-BG-DUP1	06/17/92	01:46PM
ALW2B*1	M-BG1-GW	06/17/92	03:51PM
ALW2B*2	M-BG2-GW	06/17/92	04:22PM
ALW2B*3	M-BG3-GW	06/17/92	04:53PM
ALW2B*4	M-BG4-GW	06/17/92	05:23PM
ALW2B*10	EB1	06/17/92	05:54PM
ALW2B*11	EB2	06/17/92	06:25PM
ALW2B*26	B-05HW-01	06/17/92	06:56PM
ALW2B*27	B-05BS-01	06/17/92	07:27PM
ALW2B*9	TB4	06/17/92	07:58PM
ALW2B*24	B-05WT-01	06/16/92	09:38PM

ESE BATCH : G28942

Method Blank Sample Summary

DATE	SAMPLE	STORET	PARAMETER	UNITS	FOUND
06/17/92	MB*QC*0617	34418*CLP1	CHLOROMETHANE	UG/L	ND
06/17/92	MB*QC*0617	34413*CLP1	BROMOMETHANE	UG/L	ND
06/17/92	MB*QC*0617	39175*CLP1	VINYL CHLORIDE	UG/L	ND
06/17/92	MB*QC*0617	34311*CLP1	CHLOROETHANE	UG/L	ND
06/17/92	MB*QC*0617	34423*CLP1	METHYLENE CHLORIDE	UG/L	ND
06/17/92	MB*QC*0617	81552*CLP1	ACETONE	UG/L	2.8
06/17/92	MB*QC*0617	77041*CLP1	CARBON DISULFIDE	UG/L	ND
06/17/92	MB*QC*0617	34501*CLP1	1,1-DICHLOROETHYLENE	UG/L	ND
06/17/92	MB*QC*0617	34496*CLP1	1,1-DICHLOROETHANE	UG/L	ND
06/17/92	MB*QC*0617	96469*CLP1	1,2-DICHLOROETHENE, TOTAL	UG/L	ND
06/17/92	MB*QC*0617	32106*CLP1	CHLOROFORM	UG/L	ND
06/17/92	MB*QC*0617	34531*CLP1	1,2-DICHLOROETHANE	UG/L	ND
06/17/92	MB*QC*0617	81595*CLP1	METHYL ETHYL KETONE	UG/L	ND
06/17/92	MB*QC*0617	34506*CLP1	1,1,1-TRICHL'ETHANE	UG/L	ND
06/17/92	MB*QC*0617	32102*CLP1	CARBON TETRACHLORIDE	UG/L	ND
06/17/92	MB*QC*0617	77057*CLP1	VINYL ACETATE	UG/L	ND
06/17/92	MB*QC*0617	32101*CLP1	BROMODICHLOROMETHANE	UG/L	ND
06/17/92	MB*QC*0617	34541*CLP1	1,2-DICHLOROPROPANE	UG/L	ND
06/17/92	MB*QC*0617	34704*CLP1	CIS-1,3-DICHLORO PROPENE	UG/L	ND
06/17/92	MB*QC*0617	39180*CLP1	TRICHLOROETHENE	UG/L	ND
06/17/92	MB*QC*0617	32105*CLP1	DIBROMOCHLOROMETHANE	UG/L	ND
06/17/92	MB*QC*0617	34511*CLP1	1,1,2-TRICHL'ETHANE	UG/L	ND
06/17/92	MB*QC*0617	34030*CLP1	BENZENE	UG/L	ND
06/17/92	MB*QC*0617	34699*CLP1	TRANS-1,3-DICHLORO PROPENE	UG/L	ND
06/17/92	MB*QC*0617	32104*CLP1	BROMOFORM	UG/L	ND
06/17/92	MB*QC*0617	81596*CLP1	METHYL ISOBUT'KETONE	UG/L	ND
06/17/92	MB*QC*0617	77103*CLP1	2-HEXANONE	UG/L	ND
06/17/92	MB*QC*0617	34475*CLP1	TETRACHLOROETHENE	UG/L	ND
06/17/92	MB*QC*0617	34516*CLP1	1,1,2,2-TETRACHLORO ETHANE	UG/L	ND
06/17/92	MB*QC*0617	34010*CLP1	TOLUENE	UG/L	ND
06/17/92	MB*QC*0617	34301*CLP1	CHLOROBENZENE	UG/L	ND
06/17/92	MB*QC*0617	34371*CLP1	ETHYLBENZENE	UG/L	ND
06/17/92	MB*QC*0617	77128*CLP1	STYRENE	UG/L	ND
06/17/92	MB*QC*0617	81551*CLP1	XYLENES,TOTAL	UG/L	ND

Standard Matrix Spike Recovery Summary

DATE	SAMPLE	STORET	PARAMETER	%RECV	RECV CRIT	UNITS	TARGET	FOUND
06/17/92	SP1*QC*1	34501*CLP1	1,1-DICHLOROETHYLENE	91	61-145	UG/L	10.0	9.1
06/17/92	SP1*QC*1	39180*CLP1	TRICHLOROETHENE	100	71-120	UG/L	10.0	10.0
06/17/92	SP1*QC*1	34030*CLP1	BENZENE	110	76-127	UG/L	10.0	11
06/17/92	SP1*QC*1	34010*CLP1	TOLUENE	110	76-125	UG/L	10.0	11
06/17/92	SP1*QC*1	34301*CLP1	CHLOROBENZENE	100	75-130	UG/L	10.0	10.0

Sample Matrix Spike Recovery Summary

DATE	SAMPLE	STORET	PARAMETER	%RECV	RECV CRIT	UNSPIKED	UNITS	TARGET	FOUND	RPD
06/17/92	SPM1*ALW2B*5	34501*CLP1	1,1-DICHLOROETHYLENE	68	61-145	3.2	UG/L	10.0	6.8	
06/17/92	SPM1*ALW2B*5	39180*CLP1	TRICHLOROETHENE	90	71-120	15	UG/L	10.0	9.0	
06/17/92	SPM1*ALW2B*5	34030*CLP1	BENZENE	110	76-127	0.86	UG/L	10.0	11	
06/17/92	SPM1*ALW2B*5	34010*CLP1	TOLUENE	110	76-125	0.0	UG/L	10.0	11	
06/17/92	SPM1*ALW2B*5	34301*CLP1	CHLOROBENZENE	110	75-130	2.2	UG/L	10.0	11	
06/17/92	SPM2*ALW2B*5	34501*CLP1	1,1-DICHLOROETHYLENE	88	61-145	3.2	UG/L	10.0	8.8	26
06/17/92	SPM2*ALW2B*5	39180*CLP1	TRICHLOROETHENE	110	71-120	15	UG/L	10.0	11	20
06/17/92	SPM2*ALW2B*5	34030*CLP1	BENZENE	110	76-127	0.86	UG/L	10.0	11	0.0
06/17/92	SPM2*ALW2B*5	34010*CLP1	TOLUENE	110	76-125	0.0	UG/L	10.0	11	0.0
06/17/92	SPM2*ALW2B*5	34301*CLP1	CHLOROBENZENE	110	75-130	2.2	UG/L	10.0	11	0.0

Surrogate Spike Recovery Summary

DATE	SAMPLE	STORET	PARAMETER	UNITS	TARGET	FOUND	%RECV	RECV CRIT
06/17/92	MB*QC*0617	98812*SUR	1,2-DICHLOROETHANE-D(4)	UG/L	10.0	9.3	93	76-114
06/17/92	MB*QC*0617	98810*SUR	TOLUENE-D(8)	UG/L	10.0	9.8	98	85-115
06/17/92	MB*QC*0617	97947*SUR	BROMOFLUOROBENZENE	UG/L	10.0	9.5	95	86-115
06/17/92	DA*ALW2B*8	98812*SUR	1,2-DICHLOROETHANE-D(4)	UG/L	10.0	9.9	99	76-114
06/17/92	DA*ALW2B*8	98810*SUR	TOLUENE-D(8)	UG/L	10.0	10.0	100	85-115
06/17/92	DA*ALW2B*8	97947*SUR	BROMOFLUOROBENZENE	UG/L	10.0	9.8	98	86-115
06/17/92	DA*ALQ4*130	98812*SUR	1,2-DICHLOROETHANE-D(4)	UG/L	10.0	10.0	100	76-114
06/17/92	DA*ALQ4*130	98810*SUR	TOLUENE-D(8)	UG/L	10.0	10.0	100	85-115
06/17/92	DA*ALQ4*130	97947*SUR	BROMOFLUOROBENZENE	UG/L	10.0	9.8	98	86-115
06/17/92	DA*ALW2B*5	98812*SUR	1,2-DICHLOROETHANE-D(4)	UG/L	10.0	10.0	100	76-114
06/17/92	DA*ALW2B*5	98810*SUR	TOLUENE-D(8)	UG/L	10.0	10.0	100	85-115
06/17/92	DA*ALW2B*5	97947*SUR	BROMOFLUOROBENZENE	UG/L	10.0	12	120	86-115
06/17/92	SPM1*ALW2B*5	98812*SUR	1,2-DICHLOROETHANE-D(4)	UG/L	10.0	10.0	100	76-114
06/17/92	SPM1*ALW2B*5	98810*SUR	TOLUENE-D(8)	UG/L	10.0	10.0	100	85-115
06/17/92	SPM1*ALW2B*5	97947*SUR	BROMOFLUOROBENZENE	UG/L	10.0	11	110	86-115
06/17/92	SPM2*ALW2B*5	98812*SUR	1,2-DICHLOROETHANE-D(4)	UG/L	10.0	10.0	100	76-114

ESE BATCH : G28942

Surrogate Spike Recovery Summary

DATE	SAMPLE	STORET	PARAMETER	UNITS	TARGET	FOUND	%RECV	RECV CRIT
06/17/92	SPM2*ALW2B*5	98810*SUR	TOLUENE-D(8)	UG/L	10.0	10.0	100	85-115
06/17/92	SPM2*ALW2B*5	97947*SUR	BROMOFLUOROBENZENE	UG/L	10.0	11	110	86-115
06/17/92	SP1*QC*1	98812*SUR	1,2-DICHLOROETHANE-D(4)	UG/L	10.0	9.8	98	76-114
06/17/92	SP1*QC*1	98810*SUR	TOLUENE-D(8)	UG/L	10.0	10.0	100	85-115
06/17/92	SP1*QC*1	97947*SUR	BROMOFLUOROBENZENE	UG/L	10.0	9.7	97	86-115
06/17/92	DA*ALW2B*1	98812*SUR	1,2-DICHLOROETHANE-D(4)	UG/L	10.0	10.0	100	76-114
06/17/92	DA*ALW2B*1	98810*SUR	TOLUENE-D(8)	UG/L	10.0	9.9	99	85-115
06/17/92	DA*ALW2B*1	97947*SUR	BROMOFLUOROBENZENE	UG/L	10.0	9.8	98	86-115
06/17/92	DA*ALW2B*2	98812*SUR	1,2-DICHLOROETHANE-D(4)	UG/L	10.0	10.0	100	76-114
06/17/92	DA*ALW2B*2	98810*SUR	TOLUENE-D(8)	UG/L	10.0	10.0	100	85-115
06/17/92	DA*ALW2B*2	97947*SUR	BROMOFLUOROBENZENE	UG/L	10.0	11	110	86-115
06/17/92	DA*ALW2B*3	98812*SUR	1,2-DICHLOROETHANE-D(4)	UG/L	10.0	10.0	100	76-114
06/17/92	DA*ALW2B*3	98810*SUR	TOLUENE-D(8)	UG/L	10.0	9.9	99	85-115
06/17/92	DA*ALW2B*3	97947*SUR	BROMOFLUOROBENZENE	UG/L	10.0	9.5	95	86-115
06/17/92	DA*ALW2B*4	98812*SUR	1,2-DICHLOROETHANE-D(4)	UG/L	10.0	9.7	97	76-114
06/17/92	DA*ALW2B*4	98810*SUR	TOLUENE-D(8)	UG/L	10.0	9.8	98	85-115
06/17/92	DA*ALW2B*4	97947*SUR	BROMOFLUOROBENZENE	UG/L	10.0	9.4	94	86-115
06/17/92	DA*ALW2B*10	98812*SUR	1,2-DICHLOROETHANE-D(4)	UG/L	10.0	10.0	100	76-114
06/17/92	DA*ALW2B*10	98810*SUR	TOLUENE-D(8)	UG/L	10.0	10.0	100	85-115
06/17/92	DA*ALW2B*10	97947*SUR	BROMOFLUOROBENZENE	UG/L	10.0	10.0	100	86-115
06/17/92	DA*ALW2B*11	98812*SUR	1,2-DICHLOROETHANE-D(4)	UG/L	10.0	10.0	100	76-114
06/17/92	DA*ALW2B*11	98810*SUR	TOLUENE-D(8)	UG/L	10.0	9.8	98	85-115
06/17/92	DA*ALW2B*11	97947*SUR	BROMOFLUOROBENZENE	UG/L	10.0	9.7	97	86-115
06/17/92	DA*ALW2B*26	98812*SUR	1,2-DICHLOROETHANE-D(4)	UG/L	10.0	10.0	100	76-114
06/17/92	DA*ALW2B*26	98810*SUR	TOLUENE-D(8)	UG/L	10.0	10.0	100	85-115
06/17/92	DA*ALW2B*26	97947*SUR	BROMOFLUOROBENZENE	UG/L	10.0	11	110	86-115
06/17/92	DA*ALW2B*27	98812*SUR	1,2-DICHLOROETHANE-D(4)	UG/L	10.0	10.0	100	76-114
06/17/92	DA*ALW2B*27	98810*SUR	TOLUENE-D(8)	UG/L	10.0	10.0	100	85-115
06/17/92	DA*ALW2B*27	97947*SUR	BROMOFLUOROBENZENE	UG/L	10.0	9.6	96	86-115
06/17/92	DA*ALW2B*9	98812*SUR	1,2-DICHLOROETHANE-D(4)	UG/L	10.0	9.9	99	76-114
06/17/92	DA*ALW2B*9	98810*SUR	TOLUENE-D(8)	UG/L	10.0	9.7	97	85-115
06/17/92	DA*ALW2B*9	97947*SUR	BROMOFLUOROBENZENE	UG/L	10.0	9.4	94	86-115
06/16/92	DA*ALW2B*24	98812*SUR	1,2-DICHLOROETHANE-D(4)	UG/L	10.0	8.8	88	76-114
06/16/92	DA*ALW2B*24	98810*SUR	TOLUENE-D(8)	UG/L	10.0	9.4	94	85-115
06/16/92	DA*ALW2B*24	97947*SUR	BROMOFLUOROBENZENE	UG/L	10.0	11	110	86-115

ESE BATCH : G28942

Environmental Science and Engineering Analytical Services
Computer QC Checks

Batch No.: G28942 Analysis Date: 06/17/92 Analyst: DANIEL LUCAS

	Yes	"Exceptions" No	Comment / Corrective Action
Analysis holding time within criteria?	X		
Extract holding time within criteria?	X		
Method blank present?	X		
Method blank within acceptance criteria?	X		
Sample matrix spike present?	X		
Sample matrix spike within acceptance criteria?	X		
Sample matrix spike duplicate present?	X		
Sample matrix spike duplicate within acceptance criteria?		X	34501*CLP1 _____ 39180*CLP1 _____
Surrogate present?	X		
Surrogate within acceptance criteria?	X		

Note: Any "NO" answer requires a comment.

OVERRIDE COMMENTS

PROB:SAMPLE MATRIX SPIKE DUPLICATE
NOT WITHIN ACCEPTANCE CRITERIA.
EXPL:MATRIX SPIKE COMPOUNDS 1,1-DI-
CHLOROTHANE HAD A18.23% RELATIVE
PERCENT DIFFERENCE (CRITERIA <14%)
AND TRICHLOROTHANE HAD A 21.02%
RELATIVE PERCENT DIFFERENCE BE-
TWEEN SPIKE AND MATRIX SPIKE DUP.
(CRITERIA <14%). BOTH OF THESE COM-
POUNDS WERE FOUND IN THE SAMPLE. IT IS
FELT THAT THIS SITUATION IS MATRIX
RELATED. ALL THE OTHER MATRIX SPIKE
COMPOUNDS WERE WITHIN CRITERIA.DCL/6/22/92

ESE BATCH : G28969
CLASSIFICATION : VOLATILE ORGANIC CMPDS - CLP SOW 2/88

METHOD BLANK CORRECTION METHOD : NONE

SAMPLE CODE	CLIENT ID	DATE ANALYZED	TIME ANALYZED
ALW2B*12	EB3	06/12/92	07:02PM
ALW2B*13	B-05PS-01	06/12/92	07:42PM
ALW2B*15	B-05PS-03	06/12/92	08:22PM
ALW2B*14	B-05PS-02	06/12/92	09:02PM
ALW2B*17	B-05PS-05	06/12/92	09:42PM
ALW2B*16	B-05PS-04	06/12/92	10:21PM
ALW2B*23	B-05PS-DUP	06/12/92	11:01PM
ALW2B*6	TB1	06/12/92	11:41PM
ALW2B*25	B-05WT-02	06/13/92	12:21AM

ESE BATCH : G28969

Method Blank Sample Summary

DATE	SAMPLE	STORET	PARAMETER	UNITS	FOUND
06/12/92	MB*QC*1	34418*CLP1	CHLOROMETHANE	UG/L	ND
06/12/92	MB*QC*1	34413*CLP1	BROMOMETHANE	UG/L	ND
06/12/92	MB*QC*1	39175*CLP1	VINYL CHLORIDE	UG/L	ND
06/12/92	MB*QC*1	34311*CLP1	CHLOROETHANE	UG/L	ND
06/12/92	MB*QC*1	34423*CLP1	METHYLENE CHLORIDE	UG/L	0.34
06/12/92	MB*QC*1	81552*CLP1	ACETONE	UG/L	2.2
06/12/92	MB*QC*1	77041*CLP1	CARBON DISULFIDE	UG/L	ND
06/12/92	MB*QC*1	34501*CLP1	1,1-DICHLOROETHYLENE	UG/L	ND
06/12/92	MB*QC*1	34496*CLP1	1,1-DICHLOROETHANE	UG/L	ND
06/12/92	MB*QC*1	96469*CLP1	1,2-DICHLOROETHENE, TOTAL	UG/L	ND
06/12/92	MB*QC*1	32106*CLP1	CHLOROFORM	UG/L	ND
06/12/92	MB*QC*1	34531*CLP1	1,2-DICHLOROETHANE	UG/L	ND
06/12/92	MB*QC*1	81595*CLP1	METHYL ETHYL KETONE	UG/L	ND
06/12/92	MB*QC*1	34506*CLP1	1,1,1-TRICHL'ETHANE	UG/L	ND
06/12/92	MB*QC*1	32102*CLP1	CARBON TETRACHLORIDE	UG/L	ND
06/12/92	MB*QC*1	77057*CLP1	VINYL ACETATE	UG/L	ND
06/12/92	MB*QC*1	32101*CLP1	BROMODICHLOROMETHANE	UG/L	ND
06/12/92	MB*QC*1	34541*CLP1	1,2-DICHLOROPROPANE	UG/L	ND
06/12/92	MB*QC*1	34704*CLP1	CIS-1,3-DICHLORO PROPENE	UG/L	ND
06/12/92	MB*QC*1	39180*CLP1	TRICHLOROETHENE	UG/L	ND
06/12/92	MB*QC*1	32105*CLP1	DIBROMOCHLOROMETHANE	UG/L	ND
06/12/92	MB*QC*1	34030*CLP1	BENZENE	UG/L	ND
06/12/92	MB*QC*1	34511*CLP1	1,1,2-TRICHL'ETHANE	UG/L	ND
06/12/92	MB*QC*1	34699*CLP1	TRANS-1,3-DICHLORO PROPENE	UG/L	ND
06/12/92	MB*QC*1	32104*CLP1	BROMOFORM	UG/L	ND
06/12/92	MB*QC*1	81596*CLP1	METHYL ISOBUT'KETONE	UG/L	ND
06/12/92	MB*QC*1	77103*CLP1	2-HEXANONE	UG/L	ND
06/12/92	MB*QC*1	34475*CLP1	TETRACHLOROETHENE	UG/L	ND
06/12/92	MB*QC*1	34516*CLP1	1,1,2,2-TETRACHLORO ETHANE	UG/L	ND
06/12/92	MB*QC*1	34010*CLP1	TOLUENE	UG/L	ND
06/12/92	MB*QC*1	34301*CLP1	CHLOROBENZENE	UG/L	ND
06/12/92	MB*QC*1	34371*CLP1	ETHYLBENZENE	UG/L	ND
06/12/92	MB*QC*1	81551*CLP1	XYLENES,TOTAL	UG/L	ND
06/12/92	MB*QC*1	77128*CLP1	STYRENE	UG/L	ND

Standard Matrix Spike Recovery Summary

DATE	SAMPLE	STORET	PARAMETER	%RECV	RECV CRIT	UNITS	TARGET	FOUND
06/12/92	SP1*QC*1	34501*CLP1	1,1-DICHLOROETHYLENE	57	61-145	UG/L	10.0	5.7
06/12/92	SP1*QC*1	39180*CLP1	TRICHLOROETHENE	100	71-120	UG/L	10.0	10.0
06/12/92	SP1*QC*1	34030*CLP1	BENZENE	100	76-127	UG/L	10.0	10.0
06/12/92	SP1*QC*1	34010*CLP1	TOLUENE	96	76-125	UG/L	10.0	9.6
06/12/92	SP1*QC*1	34301*CLP1	CHLOROBENZENE	100	75-130	UG/L	10.0	10.0

Sample Matrix Spike Recovery Summary

DATE	SAMPLE	STORET	PARAMETER	%RECV	RECV CRIT	UNSPIKED	UNITS	TARGET	FOUND	RPD
06/12/92	SPM1*ALW2B*23	34501*CLP1	1,1-DICHLOROETHYLENE	74	61-145	0.0	UG/L	500	370	
06/12/92	SPM1*ALW2B*23	39180*CLP1	TRICHLOROETHENE	94	71-120	0.0	UG/L	500	470	
06/12/92	SPM1*ALW2B*23	34030*CLP1	BENZENE	92	76-127	0.0	UG/L	500	460	
06/12/92	SPM1*ALW2B*23	34010*CLP1	TOLUENE	92	76-125	0.0	UG/L	500	460	
06/12/92	SPM1*ALW2B*23	34301*CLP1	CHLOROBENZENE	94	75-130	0.0	UG/L	500	470	
06/12/92	SPM2*ALW2B*23	34501*CLP1	1,1-DICHLOROETHYLENE	76	61-145	0.0	UG/L	500	380	2.7
06/12/92	SPM2*ALW2B*23	39180*CLP1	TRICHLOROETHENE	100	71-120	0.0	UG/L	500	500	6.2
06/12/92	SPM2*ALW2B*23	34030*CLP1	BENZENE	96	76-127	0.0	UG/L	500	480	4.3
06/12/92	SPM2*ALW2B*23	34010*CLP1	TOLUENE	98	76-125	0.0	UG/L	500	490	6.3
06/12/92	SPM2*ALW2B*23	34301*CLP1	CHLOROBENZENE	102	75-130	0.0	UG/L	500	510	6.2

Surrogate Spike Recovery Summary

DATE	SAMPLE	STORET	PARAMETER	UNITS	TARGET	FOUND	%RECV	RECV CRIT
06/12/92	MB*QC*1	98812*SUR	1,2-DICHLOROETHANE-D(4)	UG/L	10.0	9.1	91	76-114
06/12/92	MB*QC*1	98810*SUR	TOLUENE-D(8)	UG/L	10.0	10.0	100	85-115
06/12/92	MB*QC*1	97947*SUR	BROMOFLUOROBENZENE	UG/L	10.0	10.0	100	86-115
06/13/92	SP1*QC*1	98812*SUR	1,2-DICHLOROETHANE-D(4)	UG/L	10.0	9.2	92	76-114
06/13/92	SP1*QC*1	98810*SUR	TOLUENE-D(8)	UG/L	10.0	9.9	99	85-115
06/13/92	SP1*QC*1	97947*SUR	BROMOFLUOROBENZENE	UG/L	10.0	9.9	99	86-115
06/12/92	SPM1*ALW2B*23	98812*SUR	1,2-DICHLOROETHANE-D(4)	UG/L	500	460	92	76-114
06/12/92	SPM1*ALW2B*23	98810*SUR	TOLUENE-D(8)	UG/L	500	510	100	85-115
06/12/92	SPM1*ALW2B*23	97947*SUR	BROMOFLUOROBENZENE	UG/L	500	500	100	86-115
06/12/92	SPM2*ALW2B*23	98812*SUR	1,2-DICHLOROETHANE-D(4)	UG/L	500	450	90	76-114
06/12/92	SPM2*ALW2B*23	98810*SUR	TOLUENE-D(8)	UG/L	500	510	100	85-115
06/12/92	SPM2*ALW2B*23	97947*SUR	BROMOFLUOROBENZENE	UG/L	500	500	100	86-115
06/12/92	DA*ALW2B*12	98812*SUR	1,2-DICHLOROETHANE-D(4)	UG/L	10.0	9.1	91	76-114
06/12/92	DA*ALW2B*12	98810*SUR	TOLUENE-D(8)	UG/L	10.0	10.0	100	85-115
06/12/92	DA*ALW2B*12	97947*SUR	BROMOFLUOROBENZENE	UG/L	10.0	9.7	97	86-115
06/12/92	DA*ALW2B*13	98812*SUR	1,2-DICHLOROETHANE-D(4)	UG/L	10.0	9.5	95	76-114

ESE BATCH : G28969

Surrogate Spike Recovery Summary

DATE	SAMPLE	STORET	PARAMETER	UNITS	TARGET	FOUND	%RECV	RECV CRIT
06/12/92	DA*ALW2B*13	98810*SUR	TOLUENE-D(8)	UG/L	10.0	11	110	85-115
06/12/92	DA*ALW2B*13	97947*SUR	BROMOFLUOROBENZENE	UG/L	10.0	11	110	86-115
06/12/92	DA*ALW2B*15	98812*SUR	1,2-DICHLOROETHANE-D(4)	UG/L	10.0	9.3	93	76-114
06/12/92	DA*ALW2B*15	98810*SUR	TOLUENE-D(8)	UG/L	10.0	9.9	99	85-115
06/12/92	DA*ALW2B*15	97947*SUR	BROMOFLUOROBENZENE	UG/L	10.0	10.0	100	86-115
06/12/92	DA*ALW2B*14	98812*SUR	1,2-DICHLOROETHANE-D(4)	UG/L	10.0	10.0	100	76-114
06/12/92	DA*ALW2B*14	98810*SUR	TOLUENE-D(8)	UG/L	10.0	11	110	85-115
06/12/92	DA*ALW2B*14	97947*SUR	BROMOFLUOROBENZENE	UG/L	10.0	11	110	86-115
06/12/92	DA*ALW2B*17	98812*SUR	1,2-DICHLOROETHANE-D(4)	UG/L	10.0	8.8	88	76-114
06/12/92	DA*ALW2B*17	98810*SUR	TOLUENE-D(8)	UG/L	10.0	9.7	97	85-115
06/12/92	DA*ALW2B*17	97947*SUR	BROMOFLUOROBENZENE	UG/L	10.0	10.0	100	86-115
06/12/92	DA*ALW2B*16	98812*SUR	1,2-DICHLOROETHANE-D(4)	UG/L	10.0	9.1	91	76-114
06/12/92	DA*ALW2B*16	98810*SUR	TOLUENE-D(8)	UG/L	10.0	9.8	98	85-115
06/12/92	DA*ALW2B*16	97947*SUR	BROMOFLUOROBENZENE	UG/L	10.0	10.0	100	86-115
06/12/92	DA*ALW2B*23	98812*SUR	1,2-DICHLOROETHANE-D(4)	UG/L	10.0	9.3	93	76-114
06/12/92	DA*ALW2B*23	98810*SUR	TOLUENE-D(8)	UG/L	10.0	10.0	100	85-115
06/12/92	DA*ALW2B*23	97947*SUR	BROMOFLUOROBENZENE	UG/L	10.0	10.0	100	86-115
06/12/92	DA*ALW2B*6	98812*SUR	1,2-DICHLOROETHANE-D(4)	UG/L	10.0	9.0	90	76-114
06/12/92	DA*ALW2B*6	98810*SUR	TOLUENE-D(8)	UG/L	10.0	9.9	99	85-115
06/12/92	DA*ALW2B*6	97947*SUR	BROMOFLUOROBENZENE	UG/L	10.0	10.0	100	86-115
06/13/92	DA*ALW2B*25	98812*SUR	1,2-DICHLOROETHANE-D(4)	UG/L	10.0	8.9	89	76-114
06/13/92	DA*ALW2B*25	98810*SUR	TOLUENE-D(8)	UG/L	10.0	9.6	96	85-115
06/13/92	DA*ALW2B*25	97947*SUR	BROMOFLUOROBENZENE	UG/L	10.0	11	110	86-115

ESE BATCH : G28969

Environmental Science and Engineering Analytical Services
Computer QC Checks

Batch No.: G28969 Analysis Date: 06/12/92 Analyst: AL SEIER

	Yes	"Exceptions" No	Comment / Corrective Action
Analysis holding time within criteria?	X		
Extract holding time within criteria?	X		
Method blank present?	X		
Method blank within acceptance criteria?	X		
Sample matrix spike present?	X		
Sample matrix spike within acceptance criteria?	X		
Sample matrix spike duplicate present?	X		
Sample matrix spike duplicate within acceptance criteria?	X		
Surrogate present?	X		
Surrogate within acceptance criteria?	X		

Note: Any "NO" answer requires a comment.

OVERRIDE COMMENTS

Semivolatile Organic Compounds

ESE BATCH : G28952
CLASSIFICATION : ACID EXTR - CLP SOW 2/88

METHOD BLANK CORRECTION METHOD : NONE

SAMPLE CODE	CLIENT ID	DATE ANALYZED	TIME ANALYZED
ALW28*24	B-05WT-01	06/16/92	01:21AM

ESE BATCH : G28952

Method Blank Sample Summary

DATE	SAMPLE	STORET	PARAMETER	UNITS	FOUND
06/16/92	MB*QC*3	34694*CLP1	PHENOL	UG/L	ND
06/16/92	MB*QC*3	34273*CLP1	BIS(2-CHLOROETHYL) ETHER	UG/L	ND
06/16/92	MB*QC*3	34586*CLP1	2-CHLOROPHENOL	UG/L	ND
06/16/92	MB*QC*3	34566*CLP1	1,3-DICHLOROBENZENE	UG/L	ND
06/16/92	MB*QC*3	34571*CLP1	1,4-DICHLOROBENZENE	UG/L	ND
06/16/92	MB*QC*3	34536*CLP1	1,2-DICHLOROBENZENE	UG/L	ND
06/16/92	MB*QC*3	77147*CLP1	BENZYL ALCOHOL	UG/L	ND
06/16/92	MB*QC*3	99073*CLP1	2-METHYL PHENOL	UG/L	ND
06/16/92	MB*QC*3	99074*CLP1	4-METHYL PHENOL	UG/L	ND
06/16/92	MB*QC*3	34283*CLP1	BIS(2-CHL'ISOPROPYL) ETHER	UG/L	ND
06/16/92	MB*QC*3	34428*CLP1	N-NITROSODI-N-PROPYLAMINE	UG/L	ND
06/16/92	MB*QC*3	34396*CLP1	HEXACHLOROETHANE	UG/L	ND
06/16/92	MB*QC*3	34447*CLP1	NITROBENZENE	UG/L	ND
06/16/92	MB*QC*3	34408*CLP1	ISOPHORONE	UG/L	ND
06/16/92	MB*QC*3	34591*CLP1	2-NITROPHENOL	UG/L	ND
06/16/92	MB*QC*3	34606*CLP1	2,4-DIMETHYLPHENOL	UG/L	ND
06/16/92	MB*QC*3	77247*CLP1	BENZOIC ACID	UG/L	ND
06/16/92	MB*QC*3	34278*CLP1	BIS(2-CHLOROETHOXY) METHANE	UG/L	ND
06/16/92	MB*QC*3	34601*CLP1	2,4-DICHLOROPHENOL	UG/L	ND
06/16/92	MB*QC*3	34551*CLP1	1,2,4-TRICH'BENZENE	UG/L	ND
06/16/92	MB*QC*3	34696*CLP1	NAPHTHALENE	UG/L	ND
06/16/92	MB*QC*3	99075*CLP1	4-CHLOROANILINE	UG/L	ND
06/16/92	MB*QC*3	34391*CLP1	HEXACHLOROBUTADIENE	UG/L	ND
06/16/92	MB*QC*3	34452*CLP1	4-CHLORO-3-METHYL PHENOL	UG/L	ND
06/16/92	MB*QC*3	77416*CLP1	2-METHLYNAPHTHALENE	UG/L	ND
06/16/92	MB*QC*3	34386*CLP1	HEXACHLOROCYCLOPENTADIENE	UG/L	ND
06/16/92	MB*QC*3	34621*CLP1	2,4,6-TRICHL'PHENOL	UG/L	ND
06/16/92	MB*QC*3	77687*CLP1	2,4,5-TRICHL'PHENOL	UG/L	ND
06/16/92	MB*QC*3	34581*CLP1	2-CHLORONAPHTHALENE	UG/L	ND
06/16/92	MB*QC*3	99077*CLP1	2-NITROANILINE	UG/L	ND
06/16/92	MB*QC*3	34341*CLP1	DIMETHYLPTHALATE	UG/L	ND
06/16/92	MB*QC*3	34200*CLP1	ACENAPHTHYLENE	UG/L	ND
06/16/92	MB*QC*3	34626*CLP1	2,6-DINITROTOLUENE	UG/L	ND
06/16/92	MB*QC*3	99078*CLP1	3-NITROANILINE	UG/L	ND
06/16/92	MB*QC*3	34205*CLP1	ACENAPHTHENE	UG/L	ND
06/16/92	MB*QC*3	34616*CLP1	2,4-DINITROPHENOL	UG/L	ND
06/16/92	MB*QC*3	34646*CLP1	4-NITROPHENOL	UG/L	ND
06/16/92	MB*QC*3	81302*CLP1	DIBENZOFURAN	UG/L	ND
06/16/92	MB*QC*3	34611*CLP1	2,4-DINITROTOLUENE	UG/L	ND
06/16/92	MB*QC*3	34336*CLP1	DIETHYLPHTHALATE	UG/L	ND
06/16/92	MB*QC*3	34641*CLP1	4-CHLOROPHENYLPHENYL ETHER	UG/L	ND
06/16/92	MB*QC*3	34381*CLP1	FLUORENE	UG/L	ND
06/16/92	MB*QC*3	99079*CLP1	4-NITROANILINE	UG/L	ND
06/16/92	MB*QC*3	34433*CLP1	N-NITROSODIPHE'AMINE	UG/L	ND
06/16/92	MB*QC*3	34657*CLP1	2-METHYL-4,6-DINITROPHENOL	UG/L	ND
06/16/92	MB*QC*3	34636*CLP1	4-BROMOPHENYLPHENYL ETHER	UG/L	ND
06/16/92	MB*QC*3	39700*CLP1	HEXACHLOROBENZENE	UG/L	ND
06/16/92	MB*QC*3	39032*CLP1	PENTACHLOROPHENOL	UG/L	ND
06/16/92	MB*QC*3	34461*CLP1	PHENANTHRENE	UG/L	ND
06/16/92	MB*QC*3	34220*CLP1	ANTHRACENE	UG/L	ND
06/16/92	MB*QC*3	39110*CLP1	DI-N-BUTYLPHTHALATE	UG/L	ND
06/16/92	MB*QC*3	34376*CLP1	FLUORANTHENE	UG/L	ND
06/16/92	MB*QC*3	34469*CLP1	PYRENE	UG/L	ND
06/16/92	MB*QC*3	34292*CLP1	BUTYLBENZYLPHTHALATE	UG/L	ND
06/16/92	MB*QC*3	34631*CLP1	3,3'-DICHL'BENZIDINE	UG/L	ND
06/16/92	MB*QC*3	34526*CLP1	BENZO(A)ANTHRACENE	UG/L	ND
06/16/92	MB*QC*3	34320*CLP1	CHRYSENE	UG/L	ND
06/16/92	MB*QC*3	39100*CLP1	BIS(2-ETHYLHEXYL) PHTHALATE	UG/L	1.5
06/16/92	MB*QC*3	34596*CLP1	DI-N-OCTYLPHTHALATE	UG/L	ND
06/16/92	MB*QC*3	34230*CLP1	BENZO(B)FLUORANTHENE	UG/L	ND
06/16/92	MB*QC*3	34242*CLP1	BENZO(K)FLUORANTHENE	UG/L	ND
06/16/92	MB*QC*3	34247*CLP1	BENZO(A)PYRENE	UG/L	ND
06/16/92	MB*QC*3	34403*CLP1	INDENO(1,2,3-CD) PYRENE	UG/L	ND
06/16/92	MB*QC*3	34556*CLP1	DIBEN'(A,H)ANTH'CENE	UG/L	ND
06/16/92	MB*QC*3	34521*CLP1	BENZO(GHI)PERYLENE	UG/L	ND

Standard Matrix Spike Recovery Summary

DATE	SAMPLE	STORET	PARAMETER	%RECV	RECV CRIT	UNITS	TARGET	FOUND
06/16/92	SP1*QC*3	34694*CLP1	PHENOL	52	12-89	UG/L	100	52
06/16/92	SP1*QC*3	34586*CLP1	2-CHLOROPHENOL	94	27-123	UG/L	100	94
06/16/92	SP1*QC*3	34571*CLP1	1,4-DICHLOROBENZENE	58	36-97	UG/L	50	29
06/16/92	SP1*QC*3	34428*CLP1	N-NITROSODI-N-PROPYLAMINE	60	41-116	UG/L	50	30
06/16/92	SP1*QC*3	34551*CLP1	1,2,4-TRICH'BENZENE	60	39-98	UG/L	50	30
06/16/92	SP1*QC*3	34452*CLP1	4-CHLORO-3-METHYL PHENOL	110	23-97	UG/L	100	110
06/16/92	SP1*QC*3	34205*CLP1	ACENAPHTHENE	66	46-118	UG/L	50	33
06/16/92	SP1*QC*3	34646*CLP1	4-NITROPHENOL	73	10-80	UG/L	100	73

ESE BATCH : G28952

Standard Matrix Spike Recovery Summary

DATE	SAMPLE	STORET	PARAMETER	%RECV	RECV CRIT	UNITS	TARGET	FOUND
06/16/92	SP1*QC*3	34611*CLP1	2,4-DINITROTOLUENE	126	24-96	UG/L	50	63
06/16/92	SP1*QC*3	39032*CLP1	PENTACHLOROPHENOL	92	9-103	UG/L	100	92
06/16/92	SP1*QC*3	34469*CLP1	PYRENE	88	26-127	UG/L	50	44

Sample Matrix Spike Recovery Summary

DATE	SAMPLE	STORET	PARAMETER	%RECV	RECV CRIT	UNSPIKED	UNITS	TARGET	FOUND	RPD
06/16/92	SPM1*ALW2B*24	34694*CLP1	PHENOL	24	12-89	0.0	UG/L	140	34	
06/16/92	SPM1*ALW2B*24	34586*CLP1	2-CHLOROPHENOL	47	27-123	0.0	UG/L	140	66	
06/16/92	SPM1*ALW2B*24	34571*CLP1	1,4-DICHLOROBENZENE	62	36-97	0.0	UG/L	71	44	
06/16/92	SPM1*ALW2B*24	34428*CLP1	N-NITROSODI-N-PROPYLAMINE	97	41-116	0.0	UG/L	71	69	
06/16/92	SPM1*ALW2B*24	34551*CLP1	1,2,4-TRICH'BENZENE	75	39-98	0.0	UG/L	71	53	
06/16/92	SPM1*ALW2B*24	34452*CLP1	4-CHLORO-3-METHYL PHENOL	93	23-97	0.0	UG/L	140	130	
06/16/92	SPM1*ALW2B*24	34205*CLP1	ACENAPHTHENE	85	46-118	0.0	UG/L	71	60	
06/16/92	SPM1*ALW2B*24	34646*CLP1	4-NITROPHENOL	93	10-80	0.0	UG/L	140	130	
06/16/92	SPM1*ALW2B*24	34611*CLP1	2,4-DINITROTOLUENE	94	24-96	0.0	UG/L	71	67	
06/16/92	SPM1*ALW2B*24	39032*CLP1	PENTACHLOROPHENOL	114	9-103	0.0	UG/L	140	160	
06/16/92	SPM1*ALW2B*24	34469*CLP1	PYRENE	79	26-127	0.0	UG/L	71	56	

Surrogate Spike Recovery Summary

DATE	SAMPLE	STORET	PARAMETER	UNITS	TARGET	FOUND	%RECV	RECV CRIT
06/16/92	MB*QC*3	98316*SUR	2-FLUOROPHENOL	UG/L	100	70	70	21-100
06/16/92	MB*QC*3	98317*SUR	PHENOL-D(5)	UG/L	100	49	49	10-94
06/16/92	MB*QC*3	98318*SUR	NITROBENZENE-D(5)	UG/L	50	32	64	35-114
06/16/92	MB*QC*3	98321*SUR	2-FLUOROBIPHENYL	UG/L	50	31	62	43-116
06/16/92	MB*QC*3	97446*SUR	2,4,6-TRIBROMOPHENOL	UG/L	100	92	92	10-123
06/16/92	MB*QC*3	97447*SUR	TERPHENYL-D(14)	UG/L	50	48	96	33-141
06/16/92	DA*ALW2B*24	98316*SUR	2-FLUOROPHENOL	UG/L	100	68	68	21-100
06/16/92	DA*ALW2B*24	98317*SUR	PHENOL-D(5)	UG/L	100	35	35	10-94
06/16/92	DA*ALW2B*24	98318*SUR	NITROBENZENE-D(5)	UG/L	50	44	88	35-114
06/16/92	DA*ALW2B*24	98321*SUR	2-FLUOROBIPHENYL	UG/L	50	48	96	43-116
06/16/92	DA*ALW2B*24	97446*SUR	2,4,6-TRIBROMOPHENOL	UG/L	100	92	92	10-123
06/16/92	DA*ALW2B*24	97447*SUR	TERPHENYL-D(14)	UG/L	50	47	94	33-141
06/16/92	SPM1*ALW2B*24	98316*SUR	2-FLUOROPHENOL	UG/L	140	63	45	21-100
06/16/92	SPM1*ALW2B*24	98317*SUR	PHENOL-D(5)	UG/L	140	64	46	10-94
06/16/92	SPM1*ALW2B*24	98318*SUR	NITROBENZENE-D(5)	UG/L	71	81	110	35-114
06/16/92	SPM1*ALW2B*24	98321*SUR	2-FLUOROBIPHENYL	UG/L	71	62	87	43-116
06/16/92	SPM1*ALW2B*24	97446*SUR	2,4,6-TRIBROMOPHENOL	UG/L	140	93	66	10-123
06/16/92	SPM1*ALW2B*24	97447*SUR	TERPHENYL-D(14)	UG/L	71	53	75	33-141
06/16/92	SP1*QC*3	98316*SUR	2-FLUOROPHENOL	UG/L	100	77	77	21-100
06/16/92	SP1*QC*3	98317*SUR	PHENOL-D(5)	UG/L	100	55	55	10-94
06/16/92	SP1*QC*3	98318*SUR	NITROBENZENE-D(5)	UG/L	50	33	66	35-114
06/16/92	SP1*QC*3	98321*SUR	2-FLUOROBIPHENYL	UG/L	50	33	66	43-116
06/16/92	SP1*QC*3	97446*SUR	2,4,6-TRIBROMOPHENOL	UG/L	100	130	130	10-123
06/16/92	SP1*QC*3	97447*SUR	TERPHENYL-D(14)	UG/L	50	46	92	33-141

ESE BATCH : G28952

Environmental Science and Engineering Analytical Services

Computer QC Checks

Batch No.: G28952 Analysis Date: 06/16/92 Analyst: SCOTT KEERAN

	Yes	"Exceptions" No	Comment / Corrective Action
Analysis holding time within criteria?	X		
Extract holding time within criteria?	X		
Method blank present?	X		
Method blank within acceptance criteria?	X		
Sample matrix spike present?	X		
Sample matrix spike within acceptance criteria?		X	34646*CLP1 39032*CLP1
Sample matrix spike duplicate present?		X	
Sample matrix spike duplicate within acceptance criteria?			
Surrogate present?	X		
Surrogate within acceptance criteria?		X	97446*SUR

Note: Any "NO" answer requires a comment.

OVERRIDE COMMENTS

PROB:SAMPLE MATRIX SPIKE NOT WITHIN
ACCEPTANCE CRITERIA.
EXPL:FOR SPMI, THE PCP RECOVERY WAS
112.57% WITH AN UPPER LIMIT OF
103%. THE 4-NITROPHENOL RE
COVERY WAS 94.15% WITH AN UPPER
LIMIT OF 80%. THESE REVOVERIES
ARE WITHIN THE RANGE OF HISTORIC
DATA.

PROB:SAMPLE MATRIX SPIKE DUPLICATE
NOT PRESENT.
EXPL:THE MATRIX SPIKE WAS LOST DURING
SAMPLE PREPARATION.

PROB:SURROGATE NOT WITHIN ACCEPTANCE
CRITERIA.
EXPL:FOR SAMPLE SP1*NONE*3, THE 2,4,6
TBP REVOVERY WAS 131.03% WITH AN
UPPER LIMIT OF 123%. BY CLP CRITERIA
SAMPLES ARE ALLOWED TO FAIL ONE
ACID AND OR ONE BASE SURROGATE./SK/6/23/92

ESE BATCH : G29136
CLASSIFICATION : ACID EXTR - CLP SOW 2/88

METHOD BLANK CORRECTION METHOD : NONE

SAMPLE CODE	CLIENT ID	DATE ANALYZED	TIME ANALYZED
ALW2B*1	M-BG1-GW	06/24/92	10:48AM
ALW2B*2	M-BG2-GW	06/24/92	11:40AM
ALW2B*3	M-BG3-GW	06/24/92	12:33PM
ALW2B*4	M-BG4-GW	06/24/92	01:25PM
ALW2B*10	EB1	06/24/92	02:17PM

ESE BATCH : G29136

Method Blank Sample Summary

DATE	SAMPLE	STORET	PARAMETER	UNITS	FOUND
06/24/92	MB*QC*1	34694*CLP1	PHENOL	UG/L	ND
06/24/92	MB*QC*1	34273*CLP1	BIS(2-CHLOROETHYL) ETHER	UG/L	ND
06/24/92	MB*QC*1	34586*CLP1	2-CHLOROPHENOL	UG/L	ND
06/24/92	MB*QC*1	34566*CLP1	1,3-DICHLOROBENZENE	UG/L	ND
06/24/92	MB*QC*1	34571*CLP1	1,4-DICHLOROBENZENE	UG/L	ND
06/24/92	MB*QC*1	34536*CLP1	1,2-DICHLOROBENZENE	UG/L	ND
06/24/92	MB*QC*1	77147*CLP1	BENZYL ALCOHOL	UG/L	ND
06/24/92	MB*QC*1	99073*CLP1	2-METHYL PHENOL	UG/L	ND
06/24/92	MB*QC*1	99074*CLP1	4-METHYL PHENOL	UG/L	ND
06/24/92	MB*QC*1	34283*CLP1	BIS(2-CHL'ISOPROPYL) ETHER	UG/L	ND
06/24/92	MB*QC*1	34428*CLP1	N-NITROSODI-N-PROPYLAMINE	UG/L	ND
06/24/92	MB*QC*1	34396*CLP1	HEXACHLOROETHANE	UG/L	ND
06/24/92	MB*QC*1	34447*CLP1	NITROBENZENE	UG/L	ND
06/24/92	MB*QC*1	34408*CLP1	ISOPHORONE	UG/L	ND
06/24/92	MB*QC*1	34591*CLP1	2-NITROPHENOL	UG/L	ND
06/24/92	MB*QC*1	34606*CLP1	2,4-DIMETHYLPHENOL	UG/L	ND
06/24/92	MB*QC*1	77247*CLP1	BENZOIC ACID	UG/L	ND
06/24/92	MB*QC*1	34278*CLP1	BIS(2-CHLOROETHOXY) METHANE	UG/L	ND
06/24/92	MB*QC*1	34601*CLP1	2,4-DICHLOROPHENOL	UG/L	ND
06/24/92	MB*QC*1	34551*CLP1	1,2,4-TRICH'BENZENE	UG/L	ND
06/24/92	MB*QC*1	34696*CLP1	NAPHTHALENE	UG/L	ND
06/24/92	MB*QC*1	99075*CLP1	4-CHLOROANILINE	UG/L	ND
06/24/92	MB*QC*1	34391*CLP1	HEXACHLOROBUTADIENE	UG/L	ND
06/24/92	MB*QC*1	34452*CLP1	4-CHLORO-3-METHYL PHENOL	UG/L	ND
06/24/92	MB*QC*1	77416*CLP1	2-METHLYNAPHTHALENE	UG/L	ND
06/24/92	MB*QC*1	34386*CLP1	HEXACHLOROCYCLOPENTADIENE	UG/L	ND
06/24/92	MB*QC*1	34621*CLP1	2,4,6-TRICHL'PHENOL	UG/L	ND
06/24/92	MB*QC*1	77687*CLP1	2,4,5-TRICHL'PHENOL	UG/L	ND
06/24/92	MB*QC*1	34581*CLP1	2-CHLORONAPHTHALENE	UG/L	ND
06/24/92	MB*QC*1	99077*CLP1	2-NITROANILINE	UG/L	ND
06/24/92	MB*QC*1	34341*CLP1	DIMETHYLPTHALATE	UG/L	ND
06/24/92	MB*QC*1	34200*CLP1	ACENAPHTHYLENE	UG/L	ND
06/24/92	MB*QC*1	34626*CLP1	2,6-DINITROTOLUENE	UG/L	ND
06/24/92	MB*QC*1	99078*CLP1	3-NITROANILINE	UG/L	ND
06/24/92	MB*QC*1	34205*CLP1	ACENAPHTHENE	UG/L	ND
06/24/92	MB*QC*1	34616*CLP1	2,4-DINITROPHENOL	UG/L	ND
06/24/92	MB*QC*1	34646*CLP1	4-NITROPHENOL	UG/L	ND
06/24/92	MB*QC*1	81302*CLP1	DIBENZOFURAN	UG/L	ND
06/24/92	MB*QC*1	34611*CLP1	2,4-DINITROTOLUENE	UG/L	ND
06/24/92	MB*QC*1	34336*CLP1	DIETHYLPHTHALATE	UG/L	ND
06/24/92	MB*QC*1	34641*CLP1	4-CHLOROPHENYLPHENYL ETHER	UG/L	ND
06/24/92	MB*QC*1	34381*CLP1	FLUORENE	UG/L	ND
06/24/92	MB*QC*1	99079*CLP1	4-NITROANILINE	UG/L	ND
06/24/92	MB*QC*1	34433*CLP1	N-NITROSODIPHE'AMINE	UG/L	ND
06/24/92	MB*QC*1	34657*CLP1	2-METHYL-4,6-DINITROPHENOL	UG/L	ND
06/24/92	MB*QC*1	34636*CLP1	4-BROMOPHENYLPHENYL ETHER	UG/L	ND
06/24/92	MB*QC*1	39700*CLP1	HEXACHLOROBENZENE	UG/L	ND
06/24/92	MB*QC*1	39032*CLP1	PENTACHLOROPHENOL	UG/L	ND
06/24/92	MB*QC*1	34461*CLP1	PHENANTHRENE	UG/L	ND
06/24/92	MB*QC*1	34220*CLP1	ANTHRACENE	UG/L	ND
06/24/92	MB*QC*1	39110*CLP1	DI-N-BUTYLPHTHALATE	UG/L	ND
06/24/92	MB*QC*1	34376*CLP1	FLUORANTHENE	UG/L	ND
06/24/92	MB*QC*1	34469*CLP1	PYRENE	UG/L	ND
06/24/92	MB*QC*1	34292*CLP1	BUTYLBENZYLPHTHALATE	UG/L	ND
06/24/92	MB*QC*1	34631*CLP1	3,3'-DICHL'BENZIDINE	UG/L	ND
06/24/92	MB*QC*1	34526*CLP1	BENZO(A)ANTHRACENE	UG/L	ND
06/24/92	MB*QC*1	34320*CLP1	CHRYSENE	UG/L	ND
06/24/92	MB*QC*1	39100*CLP1	BIS(2-ETHYLHEXYL) PHTHALATE	UG/L	2.3
06/24/92	MB*QC*1	34596*CLP1	DI-N-OCTYLPHTHALATE	UG/L	ND
06/24/92	MB*QC*1	34230*CLP1	BENZO(B)FLUORANTHENE	UG/L	ND
06/24/92	MB*QC*1	34242*CLP1	BENZO(K)FLUORANTHENE	UG/L	ND
06/24/92	MB*QC*1	34247*CLP1	BENZO(A)PYRENE	UG/L	ND
06/24/92	MB*QC*1	34403*CLP1	INDENO(1,2,3-CD) PYRENE	UG/L	ND
06/24/92	MB*QC*1	34556*CLP1	DIBEN'(A,H)ANTH'CENE	UG/L	ND
06/24/92	MB*QC*1	34521*CLP1	BENZO(GHI)PERYLENE	UG/L	ND

Standard Matrix Spike Recovery Summary

DATE	SAMPLE	STORET	PARAMETER	%RECV	RECV CRIT	UNITS	TARGET	FOUND
06/24/92	SP1*QC*1	34694*CLP1	PHENOL	53	12-89	UG/L	100	53
06/24/92	SP1*QC*1	34586*CLP1	2-CHLOROPHENOL	87	27-123	UG/L	100	87
06/24/92	SP1*QC*1	34571*CLP1	1,4-DICHLOROBENZENE	84	36-97	UG/L	50	42
06/24/92	SP1*QC*1	34428*CLP1	N-NITROSODI-N-PROPYLAMINE	80	41-116	UG/L	50	40
06/24/92	SP1*QC*1	34551*CLP1	1,2,4-TRICH'BENZENE	86	39-98	UG/L	50	43
06/24/92	SP1*QC*1	34452*CLP1	4-CHLORO-3-METHYL PHENOL	94	23-97	UG/L	100	94
06/24/92	SP1*QC*1	34205*CLP1	ACENAPHTHENE	90	46-118	UG/L	50	45
06/24/92	SP1*QC*1	34646*CLP1	4-NITROPHENOL	43	10-80	UG/L	100	43

ESE BATCH : G29136

Standard Matrix Spike Recovery Summary

DATE	SAMPLE	STORET	PARAMETER	%RECV	RECV CRIT	UNITS	TARGET	FOUND
06/24/92	SP1*QC*1	34611*CLP1	2,4-DINITROTOLUENE	118	24-96	UG/L	50	59
06/24/92	SP1*QC*1	39032*CLP1	PENTACHLOROPHENOL	86	9-103	UG/L	100	86
06/24/92	SP1*QC*1	34469*CLP1	PYRENE	88	26-127	UG/L	50	44

Sample Matrix Spike Recovery Summary

DATE	SAMPLE	STORET	PARAMETER	%RECV	RECV CRIT	UNSPIKED	UNITS	TARGET	FOUND	RPD
06/24/92	SPM1*ALW2B*2	34694*CLP1	PHENOL	66	12-89	0.0	UG/L	120	79	
06/24/92	SPM1*ALW2B*2	34586*CLP1	2-CHLOROPHENOL	83	27-123	0.0	UG/L	120	99	
06/24/92	SPM1*ALW2B*2	34571*CLP1	1,4-DICHLOROBENZENE	86	36-97	0.0	UG/L	59	51	
06/24/92	SPM1*ALW2B*2	34428*CLP1	N-NITROSODI-N-PROPYLAMINE	83	41-116	0.0	UG/L	59	49	
06/24/92	SPM1*ALW2B*2	34551*CLP1	1,2,4-TRICH'BENZENE	92	39-98	0.0	UG/L	59	54	
06/24/92	SPM1*ALW2B*2	34452*CLP1	4-CHLORO-3-METHYL PHENOL	100	23-97	0.0	UG/L	120	120	
06/24/92	SPM1*ALW2B*2	34205*CLP1	ACENAPHTHENE	100	46-118	17	UG/L	59	59	
06/24/92	SPM1*ALW2B*2	34646*CLP1	4-NITROPHENOL	44	10-80	0.0	UG/L	120	53	
06/24/92	SPM1*ALW2B*2	34611*CLP1	2,4-DINITROTOLUENE	115	24-96	0.0	UG/L	59	68	
06/24/92	SPM1*ALW2B*2	39032*CLP1	PENTACHLOROPHENOL	117	9-103	0.0	UG/L	120	140	
06/24/92	SPM1*ALW2B*2	34469*CLP1	PYRENE	97	26-127	3.7	UG/L	59	57	
06/24/92	SPM2*ALW2B*2	34694*CLP1	PHENOL	69	12-89	0.0	UG/L	120	83	4.4
06/24/92	SPM2*ALW2B*2	34586*CLP1	2-CHLOROPHENOL	83	27-123	0.0	UG/L	120	100	0.0
06/24/92	SPM2*ALW2B*2	34571*CLP1	1,4-DICHLOROBENZENE	87	36-97	0.0	UG/L	60	52	1.2
06/24/92	SPM2*ALW2B*2	34428*CLP1	N-NITROSODI-N-PROPYLAMINE	83	41-116	0.0	UG/L	60	50	0.0
06/24/92	SPM2*ALW2B*2	34551*CLP1	1,2,4-TRICH'BENZENE	92	39-98	0.0	UG/L	60	55	0.0
06/24/92	SPM2*ALW2B*2	34452*CLP1	4-CHLORO-3-METHYL PHENOL	108	23-97	0.0	UG/L	120	130	9.5
06/24/92	SPM2*ALW2B*2	34205*CLP1	ACENAPHTHENE	115	46-118	17	UG/L	60	69	18
06/24/92	SPM2*ALW2B*2	34646*CLP1	4-NITROPHENOL	47	10-80	0.0	UG/L	120	56	6.6
06/24/92	SPM2*ALW2B*2	34611*CLP1	2,4-DINITROTOLUENE	117	24-96	0.0	UG/L	60	70	0.0
06/24/92	SPM2*ALW2B*2	39032*CLP1	PENTACHLOROPHENOL	117	9-103	0.0	UG/L	120	140	0.0
06/24/92	SPM2*ALW2B*2	34469*CLP1	PYRENE	118	26-127	3.7	UG/L	60	71	21

Surrogate Spike Recovery Summary

DATE	SAMPLE	STORET	PARAMETER	UNITS	TARGET	FOUND	%RECV	RECV CRIT
06/24/92	MB*QC*1	98316*SUR	2-FLUOROPHENOL	UG/L	100	70	70	21-100
06/24/92	MB*QC*1	98317*SUR	PHENOL-D(5)	UG/L	100	48	48	10-94
06/24/92	MB*QC*1	98318*SUR	NITROBENZENE-D(5)	UG/L	50	41	82	35-114
06/24/92	MB*QC*1	98321*SUR	2-FLUOROBIPHENYL	UG/L	50	40	80	43-116
06/24/92	MB*QC*1	97446*SUR	2,4,6-TRIBROMOPHENOL	UG/L	100	76	76	10-123
06/24/92	MB*QC*1	97447*SUR	TERPHENYL-D(14)	UG/L	50	45	90	33-141
06/24/92	DA*ALW2B*1	98316*SUR	2-FLUOROPHENOL	UG/L	100	73	73	21-100
06/24/92	DA*ALW2B*1	98317*SUR	PHENOL-D(5)	UG/L	100	70	70	10-94
06/24/92	DA*ALW2B*1	98318*SUR	NITROBENZENE-D(5)	UG/L	50	42	84	35-114
06/24/92	DA*ALW2B*1	98321*SUR	2-FLUOROBIPHENYL	UG/L	50	40	80	43-116
06/24/92	DA*ALW2B*1	97446*SUR	2,4,6-TRIBROMOPHENOL	UG/L	100	95	95	10-123
06/24/92	DA*ALW2B*1	97447*SUR	TERPHENYL-D(14)	UG/L	50	45	90	33-141
06/24/92	DA*ALW2B*2	98316*SUR	2-FLUOROPHENOL	UG/L	100	62	62	21-100
06/24/92	DA*ALW2B*2	98317*SUR	PHENOL-D(5)	UG/L	100	61	61	10-94
06/24/92	DA*ALW2B*2	98318*SUR	NITROBENZENE-D(5)	UG/L	50	41	82	35-114
06/24/92	DA*ALW2B*2	98321*SUR	2-FLUOROBIPHENYL	UG/L	50	41	82	43-116
06/24/92	DA*ALW2B*2	97446*SUR	2,4,6-TRIBROMOPHENOL	UG/L	100	75	75	10-123
06/24/92	DA*ALW2B*2	97447*SUR	TERPHENYL-D(14)	UG/L	50	49	98	33-141
06/24/92	DA*ALW2B*3	98316*SUR	2-FLUOROPHENOL	UG/L	100	57	57	21-100
06/24/92	DA*ALW2B*3	98317*SUR	PHENOL-D(5)	UG/L	100	48	48	10-94
06/24/92	DA*ALW2B*3	98318*SUR	NITROBENZENE-D(5)	UG/L	50	41	82	35-114
06/24/92	DA*ALW2B*3	98321*SUR	2-FLUOROBIPHENYL	UG/L	50	41	82	43-116
06/24/92	DA*ALW2B*3	97446*SUR	2,4,6-TRIBROMOPHENOL	UG/L	100	72	72	10-123
06/24/92	DA*ALW2B*3	97447*SUR	TERPHENYL-D(14)	UG/L	50	52	100	33-141
06/24/92	DA*ALW2B*4	98316*SUR	2-FLUOROPHENOL	UG/L	100	58	58	21-100
06/24/92	DA*ALW2B*4	98317*SUR	PHENOL-D(5)	UG/L	100	41	41	10-94
06/24/92	DA*ALW2B*4	98318*SUR	NITROBENZENE-D(5)	UG/L	50	41	82	35-114
06/24/92	DA*ALW2B*4	98321*SUR	2-FLUOROBIPHENYL	UG/L	50	38	76	43-116
06/24/92	DA*ALW2B*4	97446*SUR	2,4,6-TRIBROMOPHENOL	UG/L	100	83	83	10-123
06/24/92	DA*ALW2B*4	97447*SUR	TERPHENYL-D(14)	UG/L	50	47	94	33-141
06/24/92	DA*ALW2B*10	98316*SUR	2-FLUOROPHENOL	UG/L	100	71	71	21-100
06/24/92	DA*ALW2B*10	98317*SUR	PHENOL-D(5)	UG/L	100	50	50	10-94
06/24/92	DA*ALW2B*10	98318*SUR	NITROBENZENE-D(5)	UG/L	50	42	84	35-114
06/24/92	DA*ALW2B*10	98321*SUR	2-FLUOROBIPHENYL	UG/L	50	41	82	43-116
06/24/92	DA*ALW2B*10	97446*SUR	2,4,6-TRIBROMOPHENOL	UG/L	100	93	93	10-123
06/24/92	DA*ALW2B*10	97447*SUR	TERPHENYL-D(14)	UG/L	50	48	96	33-141
06/24/92	SP1*QC*1	98316*SUR	2-FLUOROPHENOL	UG/L	100	67	67	21-100
06/24/92	SP1*QC*1	98317*SUR	PHENOL-D(5)	UG/L	100	51	51	10-94
06/24/92	SP1*QC*1	98318*SUR	NITROBENZENE-D(5)	UG/L	50	39	78	35-114
06/24/92	SP1*QC*1	98321*SUR	2-FLUOROBIPHENYL	UG/L	50	38	76	43-116
06/24/92	SP1*QC*1	97446*SUR	2,4,6-TRIBROMOPHENOL	UG/L	100	99	99	10-123
06/24/92	SP1*QC*1	97447*SUR	TERPHENYL-D(14)	UG/L	50	43	86	33-141
06/24/92	SPM1*ALW2B*2	98316*SUR	2-FLUOROPHENOL	UG/L	120	75	63	21-100
06/24/92	SPM1*ALW2B*2	98317*SUR	PHENOL-D(5)	UG/L	120	79	66	10-94

ESE BATCH : G29136

Surrogate Spike Recovery Summary

DATE	SAMPLE	STORET	PARAMETER	UNITS	TARGET	FOUND	%RECV	RECV CRIT
06/24/92	SPM1*ALW2B*2	98318*SUR	NITROBENZENE-D(5)	UG/L	59	50	85	35-114
06/24/92	SPM1*ALW2B*2	98321*SUR	2-FLUOROBIPHENYL	UG/L	59	49	83	43-116
06/24/92	SPM1*ALW2B*2	97446*SUR	2,4,6-TRIBROMOPHENOL	UG/L	120	100	83	10-123
06/24/92	SPM1*ALW2B*2	97447*SUR	TERPHENYL-D(14)	UG/L	59	57	97	33-141
06/24/92	SPM2*ALW2B*2	98316*SUR	2-FLUOROPHENOL	UG/L	120	80	67	21-100
06/24/92	SPM2*ALW2B*2	98317*SUR	PHENOL-D(5)	UG/L	120	83	69	10-94
06/24/92	SPM2*ALW2B*2	98318*SUR	NITROBENZENE-D(5)	UG/L	60	51	85	35-114
06/24/92	SPM2*ALW2B*2	98321*SUR	2-FLUOROBIPHENYL	UG/L	60	50	83	43-116
06/24/92	SPM2*ALW2B*2	97446*SUR	2,4,6-TRIBROMOPHENOL	UG/L	120	120	100	10-123
06/24/92	SPM2*ALW2B*2	97447*SUR	TERPHENYL-D(14)	UG/L	60	62	100	33-141

ESE BATCH : G29136

Environmental Science and Engineering Analytical Services
Computer QC Checks

Batch No.: G29136 Analysis Date: 06/24/92 Analyst: SCOTT KEERAN

	Yes	"Exceptions" No	Comment / Corrective Action
Analysis holding time within criteria?	X		
Extract holding time within criteria?	X		
Method blank present?	X		
Method blank within acceptance criteria?	X		
Sample matrix spike present?	X		
Sample matrix spike within acceptance criteria?		X	34452*CLP1 34611*CLP1 39032*CLP1
Sample matrix spike duplicate present?	X		
Sample matrix spike duplicate within acceptance criteria?		X	34452*CLP1 34611*CLP1 39032*CLP1
Surrogate present?	X		
Surrogate within acceptance criteria?	X		

Note: Any "NO" answer requires a comment.

OVERRIDE COMMENTS

PROB.:SAMPLE MATRIX SPIKE NOT WITHIN ACCEPTANCE
CRITERIA.
EXPL.:4CL3MEPHENOL-FOR 4-CHLORO-3-METHYLPHENOL, THE
SPM1 AND SPM2 RECOVERIES WERE 104.17% AND 104.87%
WITH AN UPPER LIMIT OF 97%.
2,4DNTOLUENE-FOR 2,4DNT, THE SPM1 AND SPM2 RECOVERIES
WERE 116.29% AND 116.30% WITH AN UPPER LIMIT OF 96%.
PHENCLPHENOL-FOR PCP, THE SPM1 AND SPM2 RECOVERIES
WERE 116.38% AND 112.78% WITH AN UPPER LIMIT OF 103%.
FOR ALL OF THE ABOVE COMPOUNDS, THE RECOVERIES
ARE WITHIN THE RANGE OF HISTORICAL DATA./WSK

PROB.:SAMPLE MATRIX SPIKE DUPLICATE NOT WITHIN ACCEPTANCE
CRITERIA.
EXPL.:SEEE ABOVE.

ESE BATCH : G29205
CLASSIFICATION : ACID EXTR - CLP SOW 2/88

METHOD BLANK CORRECTION METHOD : NONE

SAMPLE CODE	CLIENT ID	DATE ANALYZED	TIME ANALYZED
ALW2B*27	B-05BS-01	06/24/92	04:49PM
ALW2B*5	M-BG-DUP1	06/24/92	07:48PM
ALW2B*26	B-05HW-01	06/25/92	04:53PM
ALW2B*11	EB2	06/25/92	03:53PM

ESE BATCH : G29205

Method Blank Sample Summary

DATE	SAMPLE	STORET	PARAMETER	UNITS	FOUND
06/24/92	MB*0622*1	34694*CLP1	PHENOL	UG/L	ND
06/24/92	MB*0622*1	34273*CLP1	BIS(2-CHLOROETHYL) ETHER	UG/L	ND
06/24/92	MB*0622*1	34586*CLP1	2-CHLOROPHENOL	UG/L	ND
06/24/92	MB*0622*1	34566*CLP1	1,3,DICHLOROBENZENE	UG/L	ND
06/24/92	MB*0622*1	34571*CLP1	1,4-DICHLOROBENZENE	UG/L	ND
06/24/92	MB*0622*1	34536*CLP1	1,2-DICHLOROBENZENE	UG/L	ND
06/24/92	MB*0622*1	77147*CLP1	BENZYL ALCOHOL	UG/L	ND
06/24/92	MB*0622*1	99073*CLP1	2-METHYL PHENOL	UG/L	ND
06/24/92	MB*0622*1	99074*CLP1	4-METHYL PHENOL	UG/L	ND
06/24/92	MB*0622*1	34283*CLP1	BIS(2-CHL'ISOPROPYL) ETHER	UG/L	ND
06/24/92	MB*0622*1	34428*CLP1	N-NITROSODI-N-PROPYLAMINE	UG/L	ND
06/24/92	MB*0622*1	34396*CLP1	HEXACHLOROETHANE	UG/L	ND
06/24/92	MB*0622*1	34447*CLP1	NITROBENZENE	UG/L	ND
06/24/92	MB*0622*1	34408*CLP1	ISOPHORONE	UG/L	ND
06/24/92	MB*0622*1	34591*CLP1	2-NITROPHENOL	UG/L	ND
06/24/92	MB*0622*1	34606*CLP1	2,4-DIMETHYLPHENOL	UG/L	ND
06/24/92	MB*0622*1	77247*CLP1	BENZOIC ACID	UG/L	ND
06/24/92	MB*0622*1	34278*CLP1	BIS(2-CHLOROETHOXY) METHANE	UG/L	ND
06/24/92	MB*0622*1	34551*CLP1	1,2,4-TRICH'BENZENE	UG/L	ND
06/24/92	MB*0622*1	34601*CLP1	2,4-DICHLOROPHENOL	UG/L	ND
06/24/92	MB*0622*1	34696*CLP1	NAPHTHALENE	UG/L	ND
06/24/92	MB*0622*1	99075*CLP1	4-CHLOROANILINE	UG/L	ND
06/24/92	MB*0622*1	34391*CLP1	HEXACHLOROBUTADIENE	UG/L	ND
06/24/92	MB*0622*1	34452*CLP1	4-CHLORO-3-METHYL PHENOL	UG/L	ND
06/24/92	MB*0622*1	77416*CLP1	2-METHLYNAPHTHALENE	UG/L	ND
06/24/92	MB*0622*1	34386*CLP1	HEXACHLOROCYCLOPENTADIENE	UG/L	ND
06/24/92	MB*0622*1	34621*CLP1	2,4,6-TRICHL'PHENOL	UG/L	ND
06/24/92	MB*0622*1	77687*CLP1	2,4,5-TRICHL'PHENOL	UG/L	ND
06/24/92	MB*0622*1	34581*CLP1	2-CHLORONAPHTHALENE	UG/L	ND
06/24/92	MB*0622*1	99077*CLP1	2-NITROANILINE	UG/L	ND
06/24/92	MB*0622*1	34341*CLP1	DIMETHYLPTHALATE	UG/L	ND
06/24/92	MB*0622*1	34200*CLP1	ACENAPHTHYLENE	UG/L	ND
06/24/92	MB*0622*1	34626*CLP1	2,6-DINITROTOLUENE	UG/L	ND
06/24/92	MB*0622*1	99078*CLP1	3-NITROANILINE	UG/L	ND
06/24/92	MB*0622*1	34205*CLP1	ACENAPHTHENE	UG/L	ND
06/24/92	MB*0622*1	34616*CLP1	2,4-DINITROPHENOL	UG/L	ND
06/24/92	MB*0622*1	34646*CLP1	4-NITROPHENOL	UG/L	ND
06/24/92	MB*0622*1	81302*CLP1	DIBENZOFURAN	UG/L	ND
06/24/92	MB*0622*1	34611*CLP1	2,4-DINITROTOLUENE	UG/L	ND
06/24/92	MB*0622*1	34336*CLP1	DIETHYLPHTHALATE	UG/L	ND
06/24/92	MB*0622*1	34641*CLP1	4-CHLOROPHENYLPHENYL ETHER	UG/L	ND
06/24/92	MB*0622*1	34381*CLP1	FLUORENE	UG/L	ND
06/24/92	MB*0622*1	99079*CLP1	4-NITROANILINE	UG/L	ND
06/24/92	MB*0622*1	34433*CLP1	N-NITROSODIPHE'AMINE	UG/L	ND
06/24/92	MB*0622*1	34657*CLP1	2-METHYL-4,6-DINITROPHENOL	UG/L	ND
06/24/92	MB*0622*1	34636*CLP1	4-BROMOPHENYLPHENYL ETHER	UG/L	ND
06/24/92	MB*0622*1	39700*CLP1	HEXACHLOROBENZENE	UG/L	ND
06/24/92	MB*0622*1	39032*CLP1	PENTACHLOROPHENOL	UG/L	ND
06/24/92	MB*0622*1	34461*CLP1	PHENANTHRENE	UG/L	ND
06/24/92	MB*0622*1	34220*CLP1	ANTHRACENE	UG/L	ND
06/24/92	MB*0622*1	39110*CLP1	DI-N-BUTYLPHTHALATE	UG/L	ND
06/24/92	MB*0622*1	34376*CLP1	FLUORANTHENE	UG/L	ND
06/24/92	MB*0622*1	34469*CLP1	PYRENE	UG/L	ND
06/24/92	MB*0622*1	34292*CLP1	BUTYLBENZYLPHTHALATE	UG/L	ND
06/24/92	MB*0622*1	34631*CLP1	3,3'-DICHL'BENZIDINE	UG/L	ND
06/24/92	MB*0622*1	34526*CLP1	BENZO(A)ANTHRACENE	UG/L	ND
06/24/92	MB*0622*1	39100*CLP1	BIS(2-ETHYLHEXYL) PHTHALATE	UG/L	3.7
06/24/92	MB*0622*1	34320*CLP1	CHRYSENE	UG/L	ND
06/24/92	MB*0622*1	34596*CLP1	DI-N-OCTYLPHTHALATE	UG/L	ND
06/24/92	MB*0622*1	34230*CLP1	BENZO(B)FLUORANTHENE	UG/L	ND
06/24/92	MB*0622*1	34242*CLP1	BENZO(K)FLUORANTHENE	UG/L	ND
06/24/92	MB*0622*1	34247*CLP1	BENZO(A)PYRENE	UG/L	ND
06/24/92	MB*0622*1	34403*CLP1	INDENO(1,2,3-CD) PYRENE	UG/L	ND
06/24/92	MB*0622*1	34556*CLP1	DIBEN'(A,H)ANTH'CENE	UG/L	ND
06/24/92	MB*0622*1	34521*CLP1	BENZO(GHI)PERYLENE	UG/L	ND

ESE BATCH : G29205

Standard Matrix Spike Recovery Summary

DATE	SAMPLE	STORET	PARAMETER	%RECV	RECV CRIT	UNITS	TARGET	FOUND
06/24/92	SP1*0622*1	34694*CLP1	PHENOL	45	80-120	UG/L	100	45
06/24/92	SP1*0622*1	34586*CLP1	2-CHLOROPHENOL	84	80-120	UG/L	100	84
06/24/92	SP1*0622*1	34571*CLP1	1,4-DICHLOROBENZENE	62	80-120	UG/L	50	31
06/24/92	SP1*0622*1	34428*CLP1	N-NITROSODI-N-PROPYLAMINE	68	80-120	UG/L	50	34
06/24/92	SP1*0622*1	34551*CLP1	1,2,4-TRICH'BENZENE	68	80-120	UG/L	50	34
06/24/92	SP1*0622*1	34452*CLP1	4-CHLORO-3-METHYL PHENOL	89	80-120	UG/L	100	89
06/24/92	SP1*0622*1	34205*CLP1	ACENAPHTHENE	78	80-120	UG/L	50	39
06/24/92	SP1*0622*1	34646*CLP1	4-NITROPHENOL	51	80-120	UG/L	100	51
06/24/92	SP1*0622*1	34611*CLP1	2,4-DINITROTOLUENE	80	80-120	UG/L	50	40
06/24/92	SP1*0622*1	39032*CLP1	PENTACHLOROPHENOL	99	80-120	UG/L	100	99
06/24/92	SP1*0622*1	34469*CLP1	PYRENE	82	80-120	UG/L	50	41

Sample Matrix Spike Recovery Summary

DATE	SAMPLE	STORET	PARAMETER	%RECV	RECV CRIT	UNSPIKED	UNITS	TARGET	FOUND	RPD
06/24/92	SPM1*ALW2B*5	34694*CLP1	PHENOL	54	12-89	0.0	UG/L	100	54	
06/24/92	SPM1*ALW2B*5	34586*CLP1	2-CHLOROPHENOL	84	27-123	0.0	UG/L	100	84	
06/24/92	SPM1*ALW2B*5	34571*CLP1	1,4-DICHLOROBENZENE	70	36-97	9.3	UG/L	50	35	
06/24/92	SPM1*ALW2B*5	34428*CLP1	N-NITROSODI-N-PROPYLAMINE	86	41-116	0.0	UG/L	50	43	
06/24/92	SPM1*ALW2B*5	34551*CLP1	1,2,4-TRICH'BENZENE	76	39-98	0.0	UG/L	50	38	
06/24/92	SPM1*ALW2B*5	34452*CLP1	4-CHLORO-3-METHYL PHENOL	94	23-97	0.0	UG/L	100	94	
06/24/92	SPM1*ALW2B*5	34205*CLP1	ACENAPHTHENE	80	46-118	0.0	UG/L	50	40	
06/24/92	SPM1*ALW2B*5	34646*CLP1	4-NITROPHENOL	71	10-80	0.0	UG/L	100	71	
06/24/92	SPM1*ALW2B*5	34611*CLP1	2,4-DINITROTOLUENE	98	24-96	0.0	UG/L	50	49	
06/24/92	SPM1*ALW2B*5	39032*CLP1	PENTACHLOROPHENOL	110	9-103	0.0	UG/L	100	110	
06/24/92	SPM1*ALW2B*5	34469*CLP1	PYRENE	102	26-127	1.3	UG/L	50	51	
06/24/92	SPM2*ALW2B*5	34694*CLP1	PHENOL	53	12-89	0.0	UG/L	100	53	1.9
06/24/92	SPM1*ALW2B*5	34586*CLP1	2-CHLOROPHENOL	85	27-123	0.0	UG/L	100	85	1.2
06/24/92	SPM2*ALW2B*5	34571*CLP1	1,4-DICHLOROBENZENE	72	36-97	9.3	UG/L	50	36	2.9
06/24/92	SPM2*ALW2B*5	34428*CLP1	N-NITROSODI-N-PROPYLAMINE	78	41-116	0.0	UG/L	50	39	9.8
06/24/92	SPM2*ALW2B*5	34551*CLP1	1,2,4-TRICH'BENZENE	74	39-98	0.0	UG/L	50	37	2.7
06/24/92	SPM2*ALW2B*5	34452*CLP1	4-CHLORO-3-METHYL PHENOL	85	23-97	0.0	UG/L	100	85	10.0
06/24/92	SPM2*ALW2B*5	34205*CLP1	ACENAPHTHENE	78	46-118	0.0	UG/L	50	39	2.5
06/24/92	SPM2*ALW2B*5	34646*CLP1	4-NITROPHENOL	58	10-80	0.0	UG/L	100	58	20
06/24/92	SPM2*ALW2B*5	34611*CLP1	2,4-DINITROTOLUENE	84	24-96	0.0	UG/L	50	42	15
06/24/92	SPM2*ALW2B*5	39032*CLP1	PENTACHLOROPHENOL	100	9-103	0.0	UG/L	100	100	9.5
06/24/92	SPM2*ALW2B*5	34469*CLP1	PYRENE	90	26-127	1.3	UG/L	50	45	12

Surrogate Spike Recovery Summary

DATE	SAMPLE	STORET	PARAMETER	UNITS	TARGET	FOUND	%RECV	RECV CRIT
06/24/92	DA*ALW2B*27	98316*SUR	2-FLUOROPHENOL	UG/L	100	39	39	21-100
06/24/92	DA*ALW2B*27	98317*SUR	PHENOL-D(5)	UG/L	100	36	36	10-94
06/24/92	DA*ALW2B*27	98318*SUR	NITROBENZENE-D(5)	UG/L	50	32	64	35-114
06/24/92	DA*ALW2B*27	98321*SUR	2-FLUOROBIPHENYL	UG/L	50	34	68	43-116
06/24/92	DA*ALW2B*27	97446*SUR	2,4,6-TRIBROMOPHENOL	UG/L	100	37	37	10-123
06/24/92	DA*ALW2B*27	97447*SUR	TERPHENYL-D(14)	UG/L	50	38	76	33-141
06/24/92	MB*0622*1	98316*SUR	2-FLUOROPHENOL	UG/L	100	68	68	21-100
06/24/92	MB*0622*1	98317*SUR	PHENOL-D(5)	UG/L	100	45	45	10-94
06/24/92	MB*0622*1	98318*SUR	NITROBENZENE-D(5)	UG/L	50	36	72	35-114
06/24/92	MB*0622*1	98321*SUR	2-FLUOROBIPHENYL	UG/L	50	35	70	43-116
06/24/92	MB*0622*1	97446*SUR	2,4,6-TRIBROMOPHENOL	UG/L	100	84	84	10-123
06/24/92	MB*0622*1	97447*SUR	TERPHENYL-D(14)	UG/L	50	40	80	33-141
06/24/92	SP1*0622*1	98316*SUR	2-FLUOROPHENOL	UG/L	100	66	66	21-100
06/24/92	SP1*0622*1	98317*SUR	PHENOL-D(5)	UG/L	100	46	46	10-94
06/24/92	SP1*0622*1	98318*SUR	NITROBENZENE-D(5)	UG/L	50	35	70	35-114
06/24/92	SP1*0622*1	98321*SUR	2-FLUOROBIPHENYL	UG/L	50	37	74	43-116
06/24/92	SP1*0622*1	97446*SUR	2,4,6-TRIBROMOPHENOL	UG/L	100	91	91	10-123
06/24/92	SP1*0622*1	97447*SUR	TERPHENYL-D(14)	UG/L	50	40	80	33-141
06/24/92	DA*ALW2B*5	98316*SUR	2-FLUOROPHENOL	UG/L	100	60	60	21-100
06/24/92	DA*ALW2B*5	98317*SUR	PHENOL-D(5)	UG/L	100	44	44	10-94
06/24/92	DA*ALW2B*5	98318*SUR	NITROBENZENE-D(5)	UG/L	50	32	64	35-114
06/24/92	DA*ALW2B*5	98321*SUR	2-FLUOROBIPHENYL	UG/L	50	32	64	43-116
06/24/92	DA*ALW2B*5	97446*SUR	2,4,6-TRIBROMOPHENOL	UG/L	100	75	75	10-123
06/24/92	DA*ALW2B*5	97447*SUR	TERPHENYL-D(14)	UG/L	50	38	76	33-141
06/24/92	SPM1*ALW2B*5	98316*SUR	2-FLUOROPHENOL	UG/L	100	67	67	21-100
06/24/92	SPM1*ALW2B*5	98317*SUR	PHENOL-D(5)	UG/L	100	56	56	10-94
06/24/92	SPM1*ALW2B*5	98318*SUR	NITROBENZENE-D(5)	UG/L	50	38	76	35-114
06/24/92	SPM1*ALW2B*5	98321*SUR	2-FLUOROBIPHENYL	UG/L	50	36	72	43-116
06/24/92	SPM1*ALW2B*5	97446*SUR	2,4,6-TRIBROMOPHENOL	UG/L	100	82	82	10-123
06/24/92	SPM1*ALW2B*5	97447*SUR	TERPHENYL-D(14)	UG/L	50	46	92	33-141
06/24/92	SPM2*ALW2B*5	98316*SUR	2-FLUOROPHENOL	UG/L	100	72	72	21-100
06/24/92	SPM2*ALW2B*5	98317*SUR	PHENOL-D(5)	UG/L	100	57	57	10-94

ESE BATCH : G29205

Surrogate Spike Recovery Summary

DATE	SAMPLE	STORET	PARAMETER	UNITS	TARGET	FOUND	%RECV	RECV CRIT
06/24/92	SPM2*ALW2B*5	98318*SUR	NITROBENZENE-D(5)	UG/L	50	37	74	35-114
06/24/92	SPM2*ALW2B*5	98321*SUR	2-FLUOROBIPHENYL	UG/L	50	36	72	43-116
06/24/92	SPM2*ALW2B*5	97446*SUR	2,4,6-TRIBROMOPHENOL	UG/L	100	77	77	10-123
06/24/92	SPM2*ALW2B*5	97447*SUR	TERPHENYL-D(14)	UG/L	50	42	84	33-141
06/25/92	DA*ALW2B*26	98316*SUR	2-FLUOROPHENOL	UG/L	100	61	61	21-100
06/25/92	DA*ALW2B*26	98317*SUR	PHENOL-D(5)	UG/L	100	46	46	10-94
06/25/92	DA*ALW2B*26	98318*SUR	NITROBENZENE-D(5)	UG/L	50	29	58	35-114
06/25/92	DA*ALW2B*26	98321*SUR	2-FLUOROBIPHENYL	UG/L	50	34	68	43-116
06/25/92	DA*ALW2B*26	97446*SUR	2,4,6-TRIBROMOPHENOL	UG/L	100	86	86	10-123
06/25/92	DA*ALW2B*26	97447*SUR	TERPHENYL-D(14)	UG/L	50	45	90	33-141
06/25/92	DA*ALW2B*11	98316*SUR	2-FLUOROPHENOL	UG/L	100	65	65	21-100
06/25/92	DA*ALW2B*11	98317*SUR	PHENOL-D(5)	UG/L	100	45	45	10-94
06/25/92	DA*ALW2B*11	98318*SUR	NITROBENZENE-D(5)	UG/L	50	38	76	35-114
06/25/92	DA*ALW2B*11	98321*SUR	2-FLUOROBIPHENYL	UG/L	50	42	84	43-116
06/25/92	DA*ALW2B*11	97446*SUR	2,4,6-TRIBROMOPHENOL	UG/L	100	80	80	10-123
06/25/92	DA*ALW2B*11	97447*SUR	TERPHENYL-D(14)	UG/L	50	44	88	33-141

ESE BATCH : G29201

Continuing Calibration Verification Sample Summary

DATE	SAMPLE	STORET	PARAMETER	UNITS	TARGET	FOUND	%RECV	RECV CRIT
06/22/92	CCS*INDA*61	39496*CLP	Aroclor-1242	UG/L		ND		80-120
06/22/92	CCS*INDA*61	39500*CLP	Aroclor-1248	UG/L		ND		80-120
06/22/92	CCS*INDA*61	39504*CLP	Aroclor-1254	UG/L		ND		80-120
06/22/92	CCS*INDA*61	39508*CLP	Aroclor-1260	UG/L		ND		80-120
06/22/92	CCS*INDA*68	39337*CLP	alpha-BHC	UG/L		ND		80-120
06/22/92	CCS*INDA*68	39340*CLP	gamma-BHC (Lindane)	UG/L	22200	22000	99.1	80-120
06/22/92	CCS*INDA*68	39338*CLP	beta-BHC	UG/L		ND		80-120
06/22/92	CCS*INDA*68	39410*CLP	Heptachlor	UG/L	79700	80400	101	80-120
06/22/92	CCS*INDA*68	34259*CLP	delta-BHC	UG/L		ND		80-120
06/22/92	CCS*INDA*68	39330*CLP	Aldrin	UG/L	49600	49300	99.4	80-120
06/22/92	CCS*INDA*68	39420*CLP	Heptachlor epoxide	UG/L	63600	64300	101	80-120
06/22/92	CCS*INDA*68	39810*CLP	gamma-Chlordane	UG/L		ND		80-120
06/22/92	CCS*INDA*68	39348*CLP	alpha-Chlordane	UG/L		ND		80-120
06/22/92	CCS*INDA*68	34361*CLP	Endosulfan I	UG/L	57700	58000	101	80-120
06/22/92	CCS*INDA*68	39320*CLP	4,4'-DDE	UG/L		ND		80-120
06/22/92	CCS*INDA*68	39380*CLP	Dieldrin	UG/L	51200	51800	101	80-120
06/22/92	CCS*INDA*68	39390*CLP	Endrin	UG/L		ND		80-120
06/22/92	CCS*INDA*68	39310*CLP	4,4'-DDD	UG/L		ND		80-120
06/22/92	CCS*INDA*68	34356*CLP	Endosulfan II	UG/L	116000	116000	100.0	80-120
06/22/92	CCS*INDA*68	39300*CLP	4,4'-DDT	UG/L	90300	92100	102	80-120
06/22/92	CCS*INDA*68	34351*CLP	Endosulfan sulfate	UG/L		ND		80-120
06/22/92	CCS*INDA*68	39480*CLP	Methoxychlor	UG/L	396000	392000	99.0	80-120
06/22/92	CCS*INDA*68	78008*CLP	Endrin ketone	UG/L		ND		80-120
06/22/92	CCS*INDA*68	39400*CLP	Toxaphene	UG/L		ND		80-120
06/22/92	CCS*INDA*68	34671*CLP	Aroclor-1016	UG/L		ND		80-120
06/22/92	CCS*INDA*68	39488*CLP	Aroclor-1221	UG/L		ND		80-120
06/22/92	CCS*INDA*68	39492*CLP	Aroclor-1232	UG/L		ND		80-120
06/22/92	CCS*INDA*68	39496*CLP	Aroclor-1242	UG/L		ND		80-120
06/22/92	CCS*INDA*68	39500*CLP	Aroclor-1248	UG/L		ND		80-120
06/22/92	CCS*INDA*68	39504*CLP	Aroclor-1254	UG/L		ND		80-120
06/22/92	CCS*INDA*68	39508*CLP	Aroclor-1260	UG/L		ND		80-120
06/22/92	CCS*INDB*69	39337*CLP	alpha-BHC	UG/L	19900	20100	101	80-120
06/22/92	CCS*INDB*69	39340*CLP	gamma-BHC (Lindane)	UG/L		ND		80-120
06/22/92	CCS*INDB*69	39338*CLP	beta-BHC	UG/L	36200	37300	103	80-120
06/22/92	CCS*INDB*69	39410*CLP	Heptachlor	UG/L		ND		80-120
06/22/92	CCS*INDB*69	34259*CLP	delta-BHC	UG/L	38600	38900	101	80-120
06/22/92	CCS*INDB*69	39330*CLP	Aldrin	UG/L	49700	50900	102	80-120
06/22/92	CCS*INDB*69	39420*CLP	Heptachlor epoxide	UG/L		ND		80-120
06/22/92	CCS*INDB*69	39810*CLP	gamma-Chlordane	UG/L	72900	75200	103	80-120
06/22/92	CCS*INDB*69	39348*CLP	alpha-Chlordane	UG/L	71000	73700	104	80-120
06/22/92	CCS*INDB*69	34361*CLP	Endosulfan I	UG/L		ND		80-120
06/22/92	CCS*INDB*69	39320*CLP	4,4'-DDE	UG/L	46000	46700	102	80-120
06/22/92	CCS*INDB*69	39380*CLP	Dieldrin	UG/L		ND		80-120
06/22/92	CCS*INDB*69	39390*CLP	Endrin	UG/L	50300	50900	101	80-120
06/22/92	CCS*INDB*69	39310*CLP	4,4'-DDD	UG/L	71600	71900	100	80-120
06/22/92	CCS*INDB*69	34356*CLP	Endosulfan II	UG/L		ND		80-120
06/22/92	CCS*INDB*69	39300*CLP	4,4'-DDT	UG/L		ND		80-120
06/22/92	CCS*INDB*69	34351*CLP	Endosulfan sulfate	UG/L	119000	125000	105	80-120
06/22/92	CCS*INDB*69	39480*CLP	Methoxychlor	UG/L		ND		80-120
06/22/92	CCS*INDB*69	78008*CLP	Endrin ketone	UG/L	110000	113000	103	80-120
06/22/92	CCS*INDB*69	39400*CLP	Toxaphene	UG/L		ND		80-120
06/22/92	CCS*INDB*69	34671*CLP	Aroclor-1016	UG/L		ND		80-120
06/22/92	CCS*INDB*69	39488*CLP	Aroclor-1221	UG/L		ND		80-120
06/22/92	CCS*INDB*69	39492*CLP	Aroclor-1232	UG/L		ND		80-120
06/22/92	CCS*INDB*69	39496*CLP	Aroclor-1242	UG/L		ND		80-120
06/22/92	CCS*INDB*69	39500*CLP	Aroclor-1248	UG/L		ND		80-120
06/22/92	CCS*INDB*69	39504*CLP	Aroclor-1254	UG/L		ND		80-120
06/22/92	CCS*INDB*69	39508*CLP	Aroclor-1260	UG/L		ND		80-120

Method Blank Sample Summary

DATE	SAMPLE	STORET	PARAMETER	UNITS	FOUND
06/22/92	MB*QC*1	39337*CLP	alpha-BHC	UG/L	ND
06/22/92	MB*QC*1	39340*CLP	gamma-BHC (Lindane)	UG/L	ND
06/22/92	MB*QC*1	39338*CLP	beta-BHC	UG/L	ND
06/22/92	MB*QC*1	39410*CLP	Heptachlor	UG/L	ND
06/22/92	MB*QC*1	34259*CLP	delta-BHC	UG/L	ND
06/22/92	MB*QC*1	39330*CLP	Aldrin	UG/L	ND
06/22/92	MB*QC*1	39420*CLP	Heptachlor epoxide	UG/L	ND
06/22/92	MB*QC*1	39810*CLP	gamma-Chlordane	UG/L	ND
06/22/92	MB*QC*1	39348*CLP	alpha-Chlordane	UG/L	ND
06/22/92	MB*QC*1	34361*CLP	Endosulfan I	UG/L	ND
06/22/92	MB*QC*1	39320*CLP	4,4'-DDE	UG/L	ND
06/22/92	MB*QC*1	39380*CLP	Dieldrin	UG/L	ND
06/22/92	MB*QC*1	39390*CLP	Endrin	UG/L	ND
06/22/92	MB*QC*1	39310*CLP	4,4'-DDD	UG/L	ND
06/22/92	MB*QC*1	34356*CLP	Endosulfan II	UG/L	ND

ESE BATCH : G29205

Environmental Science and Engineering Analytical Services

Computer QC Checks

Batch No.: G29205 Analysis Date: 06/24/92 Analyst: D. M. RITTER

	Yes	"Exceptions" No	Comment / Corrective Action
Analysis holding time within criteria?	X		
Extract holding time within criteria?	X		
Method blank present?	X		
Method blank within acceptance criteria?	X		
Sample matrix spike present?	X		
Sample matrix spike within acceptance criteria?		X	34611*CLP1 39032*CLP1
Sample matrix spike duplicate present?	X		
Sample matrix spike duplicate within acceptance criteria?	X		
Surrogate present?	X		
Surrogate within acceptance criteria?	X		

Note: Any "NO" answer requires a comment.

OVERRIDE COMMENTS

PROB.:SAMPLE MATRIX SPIKE NOT WITHIN ACCEPTANCE CRITERIA.

EXPL.:2,4DNTOLUENE-CRITERIA 96% ACTUAL 97.45%. RECOVERIES SLIGHTLY HIGH. SURROGATES OK. GPC CLEANUP RECOVERIES USUALLY BETTER THAN NORMAL./DMR PENCLPHENOL-CRITERIA 103% ACTUAL 109.34%. RECOVERIES SLIGHTLY HIGH. SURROGATES OK. GPC CLEAN-UP RECOVERIES USUALLY BETTER THAN NORMAL./DMR

Organochlorine Pesticides & PCBs

ESE BATCH : G29201
CLASSIFICATION : CHL. PESTS - CLP SOW 2/88

STATUS : FINAL

METHOD BLANK CORRECTION METHOD : NONE

FIELD GRP	PROJECT NUMBER	PROJECT NAME	LAB COORDINATOR
ALW2B	3914042 0201	JMM/ALAMEDA NASCTO-121	JACKIE HARGROVE-ELLI

SAMPLE CODE	CLIENT ID	DATE ANALYZED	TIME ANALYZED
ALW2B*1	M-BG1-GW	06/24/92	10:22PM
ALW2B*2	M-BG2-GW	06/25/92	01:02AM
ALW2B*3	M-BG3-GW	06/25/92	02:48AM
ALW2B*4	M-BG4-GW	06/25/92	03:42AM
ALW2B*10	EB1	06/25/92	04:35AM
ALW2B*11	EB2	06/25/92	05:29AM

ESE BATCH : G29201

Continuing Calibration Verification Sample Summary

DATE	SAMPLE	STORET	PARAMETER	UNITS	TARGET	FOUND	%RECV	RECV CRIT
06/22/92	CCS*INDA*48	39337*CLP	alpha-BHC	UG/L		ND		80-120
06/22/92	CCS*INDA*48	39340*CLP	gamma-BHC (Lindane)	UG/L	22200	22100	99.5	80-120
06/22/92	CCS*INDA*48	39338*CLP	beta-BHC	UG/L		ND		80-120
06/22/92	CCS*INDA*48	39410*CLP	Heptachlor	UG/L	79700	79800	100	80-120
06/22/92	CCS*INDA*48	34259*CLP	delta-BHC	UG/L		ND		80-120
06/22/92	CCS*INDA*48	39330*CLP	Aldrin	UG/L	49600	49200	99.2	80-120
06/22/92	CCS*INDA*48	39420*CLP	Heptachlor epoxide	UG/L	63600	64000	101	80-120
06/22/92	CCS*INDA*48	39810*CLP	gamma-Chlordane	UG/L		ND		80-120
06/22/92	CCS*INDA*48	39348*CLP	alpha-Chlordane	UG/L		ND		80-120
06/22/92	CCS*INDA*48	34361*CLP	Endosulfan I	UG/L	57700	57600	99.8	80-120
06/22/92	CCS*INDA*48	39320*CLP	4,4'-DDE	UG/L		ND		80-120
06/22/92	CCS*INDA*48	39380*CLP	Dieldrin	UG/L	51200	51200	100.0	80-120
06/22/92	CCS*INDA*48	39390*CLP	Endrin	UG/L		ND		80-120
06/22/92	CCS*INDA*48	39310*CLP	4,4'-DDD	UG/L		ND		80-120
06/22/92	CCS*INDA*48	34356*CLP	Endosulfan II	UG/L	116000	115000	99.1	80-120
06/22/92	CCS*INDA*48	39300*CLP	4,4'-DDT	UG/L	90300	93200	103	80-120
06/22/92	CCS*INDA*48	34351*CLP	Endosulfan sulfate	UG/L		ND		80-120
06/22/92	CCS*INDA*48	39480*CLP	Methoxychlor	UG/L	396000	393000	99.2	80-120
06/22/92	CCS*INDA*48	78008*CLP	Endrin ketone	UG/L		ND		80-120
06/22/92	CCS*INDA*48	39400*CLP	Toxaphene	UG/L		ND		80-120
06/22/92	CCS*INDA*48	34671*CLP	Aroclor-1016	UG/L		ND		80-120
06/22/92	CCS*INDA*48	39488*CLP	Aroclor-1221	UG/L		ND		80-120
06/22/92	CCS*INDA*48	39492*CLP	Aroclor-1232	UG/L		ND		80-120
06/22/92	CCS*INDA*48	39496*CLP	Aroclor-1242	UG/L		ND		80-120
06/22/92	CCS*INDA*48	39500*CLP	Aroclor-1248	UG/L		ND		80-120
06/22/92	CCS*INDA*48	39504*CLP	Aroclor-1254	UG/L		ND		80-120
06/22/92	CCS*INDA*48	39508*CLP	Aroclor-1260	UG/L		ND		80-120
06/22/92	CCS*INDB*49	39337*CLP	alpha-BHC	UG/L	19900	19700	99.0	80-120
06/22/92	CCS*INDB*49	39340*CLP	gamma-BHC (Lindane)	UG/L		ND		80-120
06/22/92	CCS*INDB*49	39338*CLP	beta-BHC	UG/L	36200	34700	95.9	80-120
06/22/92	CCS*INDB*49	39410*CLP	Heptachlor	UG/L		ND		80-120
06/22/92	CCS*INDB*49	34259*CLP	delta-BHC	UG/L	38600	38100	98.7	80-120
06/22/92	CCS*INDB*49	39330*CLP	Aldrin	UG/L	49700	49600	99.8	80-120
06/22/92	CCS*INDB*49	39420*CLP	Heptachlor epoxide	UG/L		ND		80-120
06/22/92	CCS*INDB*49	39810*CLP	gamma-Chlordane	UG/L	72900	73000	100	80-120
06/22/92	CCS*INDB*49	39348*CLP	alpha-Chlordane	UG/L	71000	70600	99.4	80-120
06/22/92	CCS*INDB*49	34361*CLP	Endosulfan I	UG/L		ND		80-120
06/22/92	CCS*INDB*49	39320*CLP	4,4'-DDE	UG/L	46000	45800	99.6	80-120
06/22/92	CCS*INDB*49	39380*CLP	Dieldrin	UG/L		ND		80-120
06/22/92	CCS*INDB*49	39390*CLP	Endrin	UG/L	50300	49200	97.8	80-120
06/22/92	CCS*INDB*49	39310*CLP	4,4'-DDD	UG/L	71600	71200	99.4	80-120
06/22/92	CCS*INDB*49	34356*CLP	Endosulfan II	UG/L		ND		80-120
06/22/92	CCS*INDB*49	39300*CLP	4,4'-DDT	UG/L		ND		80-120
06/22/92	CCS*INDB*49	34351*CLP	Endosulfan sulfate	UG/L	119000	117000	98.3	80-120
06/22/92	CCS*INDB*49	39480*CLP	Methoxychlor	UG/L		ND		80-120
06/22/92	CCS*INDB*49	78008*CLP	Endrin ketone	UG/L	110000	109000	99.1	80-120
06/22/92	CCS*INDB*49	39400*CLP	Toxaphene	UG/L		ND		80-120
06/22/92	CCS*INDB*49	34671*CLP	Aroclor-1016	UG/L		ND		80-120
06/22/92	CCS*INDB*49	39488*CLP	Aroclor-1221	UG/L		ND		80-120
06/22/92	CCS*INDB*49	39492*CLP	Aroclor-1232	UG/L		ND		80-120
06/22/92	CCS*INDB*49	39496*CLP	Aroclor-1242	UG/L		ND		80-120
06/22/92	CCS*INDB*49	39500*CLP	Aroclor-1248	UG/L		ND		80-120
06/22/92	CCS*INDB*49	39504*CLP	Aroclor-1254	UG/L		ND		80-120
06/22/92	CCS*INDB*49	39508*CLP	Aroclor-1260	UG/L		ND		80-120
06/22/92	CCS*INDA*61	39337*CLP	alpha-BHC	UG/L		ND		80-120
06/22/92	CCS*INDA*61	39340*CLP	gamma-BHC (Lindane)	UG/L	22200	24900	112	80-120
06/22/92	CCS*INDA*61	39338*CLP	beta-BHC	UG/L		ND		80-120
06/22/92	CCS*INDA*61	39410*CLP	Heptachlor	UG/L	79700	79600	99.9	80-120
06/22/92	CCS*INDA*61	34259*CLP	delta-BHC	UG/L		ND		80-120
06/22/92	CCS*INDA*61	39330*CLP	Aldrin	UG/L	49600	51500	104	80-120
06/22/92	CCS*INDA*61	39420*CLP	Heptachlor epoxide	UG/L	63600	74300	117	80-120
06/22/92	CCS*INDA*61	39810*CLP	gamma-Chlordane	UG/L		ND		80-120
06/22/92	CCS*INDA*61	39348*CLP	alpha-Chlordane	UG/L		ND		80-120
06/22/92	CCS*INDA*61	34361*CLP	Endosulfan I	UG/L	57700	67900	118	80-120
06/22/92	CCS*INDA*61	39320*CLP	4,4'-DDE	UG/L		ND		80-120
06/22/92	CCS*INDA*61	39380*CLP	Dieldrin	UG/L	51200	60700	119	80-120
06/22/92	CCS*INDA*61	39390*CLP	Endrin	UG/L		ND		80-120
06/22/92	CCS*INDA*61	39310*CLP	4,4'-DDD	UG/L		ND		80-120
06/22/92	CCS*INDA*61	34356*CLP	Endosulfan II	UG/L	116000	133000	115	80-120
06/22/92	CCS*INDA*61	39300*CLP	4,4'-DDT	UG/L	90300	108000	120	80-120
06/22/92	CCS*INDA*61	34351*CLP	Endosulfan sulfate	UG/L		ND		80-120
06/22/92	CCS*INDA*61	39480*CLP	Methoxychlor	UG/L	396000	443000	112	80-120
06/22/92	CCS*INDA*61	78008*CLP	Endrin ketone	UG/L		ND		80-120
06/22/92	CCS*INDA*61	39400*CLP	Toxaphene	UG/L		ND		80-120
06/22/92	CCS*INDA*61	34671*CLP	Aroclor-1016	UG/L		ND		80-120
06/22/92	CCS*INDA*61	39488*CLP	Aroclor-1221	UG/L		ND		80-120
06/22/92	CCS*INDA*61	39492*CLP	Aroclor-1232	UG/L		ND		80-120

ESE BATCH : G29201

Method Blank Sample Summary

DATE	SAMPLE	STORET	PARAMETER	UNITS	FOUND
06/22/92	MB*QC*1	39300*CLP	4,4'-DDT	UG/L	ND
06/22/92	MB*QC*1	34351*CLP	Endosulfan sulfate	UG/L	ND
06/22/92	MB*QC*1	39480*CLP	Methoxychlor	UG/L	ND
06/22/92	MB*QC*1	78008*CLP	Endrin ketone	UG/L	ND
06/22/92	MB*QC*1	39400*CLP	Toxaphene	UG/L	ND
06/22/92	MB*QC*1	34671*CLP	Aroclor-1016	UG/L	ND
06/22/92	MB*QC*1	39488*CLP	Aroclor-1221	UG/L	ND
06/22/92	MB*QC*1	39492*CLP	Aroclor-1232	UG/L	ND
06/22/92	MB*QC*1	39496*CLP	Aroclor-1242	UG/L	ND
06/22/92	MB*QC*1	39500*CLP	Aroclor-1248	UG/L	ND
06/22/92	MB*QC*1	39504*CLP	Aroclor-1254	UG/L	ND
06/22/92	MB*QC*1	39508*CLP	Aroclor-1260	UG/L	ND
06/22/92	MB*QC*2	39337*CLP	alpha-BHC	UG/L	ND
06/22/92	MB*QC*2	39340*CLP	gamma-BHC (Lindane)	UG/L	ND
06/22/92	MB*QC*2	39338*CLP	beta-BHC	UG/L	ND
06/22/92	MB*QC*2	39410*CLP	Heptachlor	UG/L	ND
06/22/92	MB*QC*2	34259*CLP	delta-BHC	UG/L	ND
06/22/92	MB*QC*2	39330*CLP	Aldrin	UG/L	ND
06/22/92	MB*QC*2	39420*CLP	Heptachlor epoxide	UG/L	ND
06/22/92	MB*QC*2	39810*CLP	gamma-Chlordane	UG/L	ND
06/22/92	MB*QC*2	39348*CLP	alpha-Chlordane	UG/L	ND
06/22/92	MB*QC*2	34361*CLP	Endosulfan I	UG/L	ND
06/22/92	MB*QC*2	39320*CLP	4,4'-DDE	UG/L	ND
06/22/92	MB*QC*2	39380*CLP	Dieldrin	UG/L	ND
06/22/92	MB*QC*2	39390*CLP	Endrin	UG/L	ND
06/22/92	MB*QC*2	39310*CLP	4,4'-DDD	UG/L	ND
06/22/92	MB*QC*2	34356*CLP	Endosulfan II	UG/L	ND
06/22/92	MB*QC*2	39300*CLP	4,4'-DDT	UG/L	ND
06/22/92	MB*QC*2	34351*CLP	Endosulfan sulfate	UG/L	ND
06/22/92	MB*QC*2	39480*CLP	Methoxychlor	UG/L	ND
06/22/92	MB*QC*2	78008*CLP	Endrin ketone	UG/L	ND
06/22/92	MB*QC*2	39400*CLP	Toxaphene	UG/L	ND
06/22/92	MB*QC*2	34671*CLP	Aroclor-1016	UG/L	ND
06/22/92	MB*QC*2	39488*CLP	Aroclor-1221	UG/L	ND
06/22/92	MB*QC*2	39492*CLP	Aroclor-1232	UG/L	ND
06/22/92	MB*QC*2	39496*CLP	Aroclor-1242	UG/L	ND
06/22/92	MB*QC*2	39500*CLP	Aroclor-1248	UG/L	ND
06/22/92	MB*QC*2	39504*CLP	Aroclor-1254	UG/L	ND
06/22/92	MB*QC*2	39508*CLP	Aroclor-1260	UG/L	ND

Standard Matrix Spike Recovery Summary

DATE	SAMPLE	STORET	PARAMETER	%RECV	RECV CRIT	UNITS	TARGET	FOUND
06/22/92	SP1*QC*1	39410*CLP	Heptachlor	66.0	30-120	UG/L	0.200	0.132
06/22/92	SP1*QC*1	39330*CLP	Aldrin	68.0	37-127	UG/L	0.200	0.136
06/22/92	SP1*QC*1	39508*CLP	Aroclor-1260	60.0	47-129	UG/L	2.00	1.20
06/22/92	SP2*QC*1	39410*CLP	Heptachlor	85.5	30-120	UG/L	0.200	0.171
06/22/92	SP2*QC*1	39330*CLP	Aldrin	91.0	37-127	UG/L	0.200	0.182
06/22/92	SP2*QC*1	39508*CLP	Aroclor-1260	70.0	47-129	UG/L	2.00	1.40

Sample Matrix Spike Recovery Summary

DATE	SAMPLE	STORET	PARAMETER	%RECV	RECV CRIT	UNSPIKED	UNITS	TARGET	FOUND	RPD
06/22/92	SPM1*ALW2B*1	39340*CLP	gamma-BHC (Lindane)	102.0	55.5-123.5	0.0	UG/L	0.200	0.204	
06/22/92	SPM1*ALW2B*1	39410*CLP	Heptachlor	78.6	30-120	0.0	UG/L	0.210	0.165	
06/22/92	SPM1*ALW2B*1	39330*CLP	Aldrin	81.5	37-127	0.0	UG/L	0.200	0.163	
06/22/92	SPM1*ALW2B*1	39380*CLP	Dieldrin	101.2	52-126	0.0	UG/L	0.510	0.516	
06/22/92	SPM1*ALW2B*1	39390*CLP	Endrin	96.4	43-139	0.0	UG/L	0.500	0.482	
06/22/92	SPM1*ALW2B*1	39300*CLP	4,4'-DDT	90.0	38-128	0.0	UG/L	0.510	0.459	
06/22/92	SPM2*ALW2B*1	39340*CLP	gamma-BHC (Lindane)	89.0	55.5-123.5	0.0	UG/L	0.200	0.178	13.6
06/22/92	SPM2*ALW2B*1	39410*CLP	Heptachlor	69.0	30-120	0.0	UG/L	0.210	0.145	13.0
06/22/92	SPM2*ALW2B*1	39330*CLP	Aldrin	70.0	37-127	0.0	UG/L	0.200	0.140	15.2
06/22/92	SPM2*ALW2B*1	39380*CLP	Dieldrin	95.1	52-126	0.0	UG/L	0.510	0.485	6.02
06/22/92	SPM2*ALW2B*1	39390*CLP	Endrin	90.4	43-139	0.0	UG/L	0.500	0.452	6.42
06/22/92	SPM2*ALW2B*1	39300*CLP	4,4'-DDT	86.5	38-128	0.0	UG/L	0.510	0.441	3.97

ESE BATCH : G29201

Surrogate Spike Recovery Summary

DATE	SAMPLE	STORET	PARAMETER	UNITS	TARGET	FOUND	%RECV	RECV CRIT
06/24/92	CCS*INDA*48	97502*SUR	DIBUTYLCHLORENDATE	UG/L	227000	225000	99.1	46-146
06/24/92	CCS*INDB*49	97502*SUR	DIBUTYLCHLORENDATE	UG/L	233000	233000	100.0	46-146
06/24/92	MB*QC*1	97502*SUR	DIBUTYLCHLORENDATE	UG/L	1.00	0.972	97.2	46-146
06/24/92	MB*QC*2	97502*SUR	DIBUTYLCHLORENDATE	UG/L	1.00	1.22	122	46-146
06/24/92	SP1*QC*1	97502*SUR	DIBUTYLCHLORENDATE	UG/L	1.00	0.935	93.5	46-146
06/24/92	SP2*QC*1	97502*SUR	DIBUTYLCHLORENDATE	UG/L	1.00	1.25	125	46-146
06/24/92	DA*ALW2B*1	97502*SUR	DIBUTYLCHLORENDATE	UG/L	1.00	0.793	79.3	46-146
06/24/92	SPM1*ALW2B*1	97502*SUR	DIBUTYLCHLORENDATE	UG/L	1.00	0.753	75.3	46-146
06/25/92	SPM2*ALW2B*1	97502*SUR	DIBUTYLCHLORENDATE	UG/L	1.00	0.714	71.4	46-146
06/25/92	DA*ALW2B*2	97502*SUR	DIBUTYLCHLORENDATE	UG/L	1.00	0.955	95.5	46-146
06/25/92	CCS*INDA*61	97502*SUR	DIBUTYLCHLORENDATE	UG/L	227000	256000	113	46-146
06/25/92	DA*ALW2B*3	97502*SUR	DIBUTYLCHLORENDATE	UG/L	1.00	0.902	90.2	46-146
06/25/92	DA*ALW2B*4	97502*SUR	DIBUTYLCHLORENDATE	UG/L	1.00	0.948	94.8	46-146
06/25/92	DA*ALW2B*10	97502*SUR	DIBUTYLCHLORENDATE	UG/L	1.00	0.982	98.2	46-146
06/25/92	DA*ALW2B*11	97502*SUR	DIBUTYLCHLORENDATE	UG/L	1.00	1.21	121	46-146
06/25/92	CCS*INDA*68	97502*SUR	DIBUTYLCHLORENDATE	UG/L	227000	228000	100	46-146
06/25/92	CCS*INDB*69	97502*SUR	DIBUTYLCHLORENDATE	UG/L	233000	243000	104	46-146

ESE BATCH : G29201

Environmental Science and Engineering Analytical Services

Computer QC Checks

Batch No.: G29201 Analysis Date: 06/22/92 Analyst: MARTHA LONGFELLOW

	Yes	"Exceptions" No	Comment / Corrective Action
Analysis holding time within criteria?	X		
Extract holding time within criteria?	X		
Method blank present?	X		
Method blank within acceptance criteria?	X		
Standard matrix spike present?	X		
Standard matrix spike within acceptance criteria?	X		
Sample matrix spike present?	X		
Sample matrix spike within acceptance criteria?	X		
Sample matrix spike duplicate present?	X		
Sample matrix spike duplicate within acceptance criteria?	X		
Surrogate present?	X		
Surrogate within acceptance criteria?	X		

Note: Any "NO" answer requires a comment.

Chlorinated Herbicides

ESE BATCH : G29114
CLASSIFICATION : CHLORINATED HERBICIDES-SW8150

STATUS : FINAL

METHOD BLANK CORRECTION METHOD : NONE

FIELD GRP	PROJECT NUMBER	PROJECT NAME	LAB COORDINATOR
ALW2B	3914042 0201	JMM/ALAMEDA NASCTO-121	JACKIE HARGROVE-ELLI

SAMPLE CODE	CLIENT ID	DATE ANALYZED	TIME ANALYZED
ALW2B*1	M-BG1-GW	06/22/92	08:11PM
ALW2B*2	M-BG2-GW	06/22/92	09:05PM
ALW2B*3	M-BG3-GW	06/22/92	09:59PM
ALW2B*4	M-BG4-GW	06/22/92	10:54PM
ALW2B*10	EB1	06/22/92	11:48PM

ESE BATCH : G29114

Continuing Calibration Verification Sample Summary

DATE	SAMPLE	STORET	PARAMETER	UNITS	TARGET	FOUND	%RECV	RECV CRIT
06/21/92	CCS*200*1	38432*EC	DALAPON	UG/L	1400000	1430000	102	80-120
06/21/92	CCS*200*1	82052*EC	DICAMBA (BANVEL)	UG/L	3370000	3360000	99.7	80-120
06/21/92	CCS*200*1	38491*EC	MCPP	UG/L	160000	140000	87.5	80-120
06/21/92	CCS*200*1	39151*EC	MCPA	UG/L	224000	239000	107	80-120
06/21/92	CCS*200*1	98665*EC	DICHLOROPROP	UG/L	1300000	1350000	104	80-120
06/21/92	CCS*200*1	39730*EC	2,4-D, TOTAL	UG/L	1180000	1180000	100.0	80-120
06/21/92	CCS*200*1	39045*EC	2,4,5-TP/SILVEX+DER.	UG/L	5060000	5460000	108	80-120
06/21/92	CCS*200*1	39740*EC	2,4,5-T WATER	UG/L	4090000	4640000	113	80-120
06/21/92	CCS*200*1	38779*EC	DINOSEB	UG/L	4130000	4360000	106	80-120
06/21/92	CCS*200*1	38745*EC	2,4-DB	UG/L	658000	726000	110	80-120
06/21/92	CCS*200*2	38432*EC	DALAPON	UG/L	1400000	1440000	103	80-120
06/21/92	CCS*200*2	82052*EC	DICAMBA (BANVEL)	UG/L	3370000	3520000	104	80-120
06/21/92	CCS*200*2	38491*EC	MCPP	UG/L	160000	186000	116	80-120
06/21/92	CCS*200*2	39151*EC	MCPA	UG/L	224000	170000	75.9	80-120
06/21/92	CCS*200*2	98665*EC	DICHLOROPROP	UG/L	1300000	1330000	102	80-120
06/21/92	CCS*200*2	39730*EC	2,4-D, TOTAL	UG/L	1180000	1290000	109	80-120
06/21/92	CCS*200*2	39045*EC	2,4,5-TP/SILVEX+DER.	UG/L	5060000	5700000	113	80-120
06/21/92	CCS*200*2	39740*EC	2,4,5-T WATER	UG/L	4090000	4860000	119	80-120
06/21/92	CCS*200*2	38779*EC	DINOSEB	UG/L	4130000	4410000	107	80-120
06/21/92	CCS*200*2	38745*EC	2,4-DB	UG/L	658000	691000	105	80-120
06/21/92	CCS*200*3	38432*EC	DALAPON	UG/L	1400000	1440000	103	80-120
06/21/92	CCS*200*3	82052*EC	DICAMBA (BANVEL)	UG/L	3370000	3580000	106	80-120
06/21/92	CCS*200*3	38491*EC	MCPP	UG/L	160000	151000	94.4	80-120
06/21/92	CCS*200*3	39151*EC	MCPA	UG/L	224000	186000	83.0	80-120
06/21/92	CCS*200*3	98665*EC	DICHLOROPROP	UG/L	1300000	1340000	103.	80-120
06/21/92	CCS*200*3	39730*EC	2,4-D, TOTAL	UG/L	1180000	1290000	109	80-120
06/21/92	CCS*200*3	39045*EC	2,4,5-TP/SILVEX+DER.	UG/L	5060000	5540000	109	80-120
06/21/92	CCS*200*3	39740*EC	2,4,5-T WATER	UG/L	4090000	4840000	118	80-120
06/21/92	CCS*200*3	38779*EC	DINOSEB	UG/L	4130000	4410000	107	80-120
06/21/92	CCS*200*3	38745*EC	2,4-DB	UG/L	658000	715000	109	80-120

Method Blank Sample Summary

DATE	SAMPLE	STORET	PARAMETER	UNITS	FOUND
06/21/92	MB*ALW2B*1	38432*EC	DALAPON	UG/L	ND
06/21/92	MB*ALW2B*1	82052*EC	DICAMBA (BANVEL)	UG/L	ND
06/21/92	MB*ALW2B*1	38491*EC	MCPP	UG/L	ND
06/21/92	MB*ALW2B*1	39151*EC	MCPA	UG/L	ND
06/21/92	MB*ALW2B*1	98665*EC	DICHLOROPROP	UG/L	ND
06/21/92	MB*ALW2B*1	39730*EC	2,4-D, TOTAL	UG/L	ND
06/21/92	MB*ALW2B*1	39045*EC	2,4,5-TP/SILVEX+DER.	UG/L	ND
06/21/92	MB*ALW2B*1	39740*EC	2,4,5-T WATER	UG/L	ND
06/21/92	MB*ALW2B*1	38779*EC	DINOSEB	UG/L	ND
06/21/92	MB*ALW2B*1	38745*EC	2,4-DB	UG/L	ND

Standard Matrix Spike Recovery Summary

DATE	SAMPLE	STORET	PARAMETER	%RECV	RECV CRIT	UNITS	TARGET	FOUND
06/21/92	SP1*ALW2B*1	82052*EC	DICAMBA (BANVEL)	34.7	21-115	UG/L	2.41	0.836
06/21/92	SP1*ALW2B*1	39730*EC	2,4-D, TOTAL	49.2	9-119	UG/L	2.66	1.31
06/21/92	SP1*ALW2B*1	39045*EC	2,4,5-TP/SILVEX+DER.	85.9	73-103	UG/L	2.48	2.13

Sample Matrix Spike Recovery Summary

DATE	SAMPLE	STORET	PARAMETER	%RECV	RECV CRIT	UNSPIKED	UNITS	TARGET	FOUND	RPD
06/21/92	SPM1*ALW2B*1	82052*EC	DICAMBA (BANVEL)	44.4	21-115	0.002	UG/L	2.57	1.14	
06/21/92	SPM1*ALW2B*1	39730*EC	2,4-D, TOTAL	68.8	9-119	0.006	UG/L	2.82	1.94	
06/21/92	SPM1*ALW2B*1	39045*EC	2,4,5-TP/SILVEX+DER.	81.1	73-103	0.006	UG/L	2.64	2.14	
06/21/92	SPM2*ALW2B*1	82052*EC	DICAMBA (BANVEL)	60.2	21-115	0.002	UG/L	2.41	1.45	30.1
06/21/92	SPM2*ALW2B*1	39730*EC	2,4-D, TOTAL	79.7	9-119	0.006	UG/L	2.66	2.12	14.9
06/21/92	SPM2*ALW2B*1	39045*EC	2,4,5-TP/SILVEX+DER.	90.7	73-103	0.006	UG/L	2.48	2.25	11.3

Surrogate Spike Recovery Summary

DATE	SAMPLE	STORET	PARAMETER	UNITS	TARGET	FOUND	%RECV	RECV CRIT
06/22/92	MB*ALW2B*1	97404*SUR	DICHLOROPHENYLACETIC ACID	UG/L	2.70	1.76	65.2	80-120
06/22/92	SPX*QC*3	97404*SUR	DICHLOROPHENYLACETIC ACID	UG/L	0.27	0.24	88.9	80-120
06/22/92	SPX*QC*4	97404*SUR	DICHLOROPHENYLACETIC ACID	UG/L	0.27	0.23	85.2	80-120
06/22/92	SP1*ALW2B*1	97404*SUR	DICHLOROPHENYLACETIC ACID	UG/L	2.70	1.90	70.4	80-120
06/22/92	SPM1*ALW2B*1	97404*SUR	DICHLOROPHENYLACETIC ACID	UG/L	2.87	2.04	71.1	80-120
06/22/92	SPM2*ALW2B*1	97404*SUR	DICHLOROPHENYLACETIC ACID	UG/L	2.70	1.96	72.6	80-120

ESE BATCH : G29114

Surrogate Spike Recovery Summary

DATE	SAMPLE	STORET	PARAMETER	UNITS	TARGET	FOUND	%RECV	RECV CRIT
06/22/92	DA*ALW2B*1	97404*SUR	DICHLOROPHENYLACETIC ACID	UG/L	2.70	1.92	71.1	80-120
06/22/92	DA*ALW2B*2	97404*SUR	DICHLOROPHENYLACETIC ACID	UG/L	2.70	1.82	67.4	80-120
06/22/92	DA*ALW2B*3	97404*SUR	DICHLOROPHENYLACETIC ACID	UG/L	2.70	1.93	71.5	80-120
06/22/92	DA*ALW2B*4	97404*SUR	DICHLOROPHENYLACETIC ACID	UG/L	2.70	1.94	71.9	80-120
06/22/92	DA*ALW2B*10	97404*SUR	DICHLOROPHENYLACETIC ACID	UG/L	2.70	1.97	73.0	80-120
06/22/92	CCS*200*1	97404*SUR	DICHLOROPHENYLACETIC ACID	UG/L	2550000	2650000	104	80-120
06/22/92	CCS*200*2	97404*SUR	DICHLOROPHENYLACETIC ACID	UG/L	2550000	2640000	104	80-120
06/23/92	CCS*200*3	97404*SUR	DICHLOROPHENYLACETIC ACID	UG/L	2550000	2600000	102	80-120

ESE BATCH : G29114

Environmental Science and Engineering Analytical Services
Computer QC Checks

Batch No.: G29114 Analysis Date: 06/21/92 Analyst: MARK MATHEWS

	Yes	"Exceptions" No	Comment / Corrective Action
Analysis holding time within criteria?	X		
Extract holding time within criteria?	X		
No. of calibration standards present acceptable?	X		
Curve correlation coefficient >= 0.995?	X		
Calibration curve y-intercept < curve detection limit?	X		
Sample responses within highest standard response?	X		
Method blank present?	X		
Method blank within acceptance criteria?	X		
Standard matrix spike present?	X		
Standard matrix spike within acceptance criteria?	X		
Sample matrix spike present?	X		
Sample matrix spike within acceptance criteria?	X		
Sample matrix spike duplicate present?	X		
Sample matrix spike duplicate within acceptance criteria?	X		

Note: Any "NO" answer requires a comment.

ESE BATCH : G29117
CLASSIFICATION : CHLORINATED HERBICIDES-SW8150

STATUS : FINAL

METHOD BLANK CORRECTION METHOD : NONE

FIELD GRP	PROJECT NUMBER	PROJECT NAME	LAB COORDINATOR
ALW2B	3914042 0201	JMM/ALAMEDA NASCTO-121	JACKIE HARGROVE-ELLI

SAMPLE CODE	CLIENT ID	DATE ANALYZED	TIME ANALYZED
ALW2B*II	EB2	06/25/92	02:08PM

ESE BATCH : G29117

Continuing Calibration Verification Sample Summary

DATE	SAMPLE	STORET	PARAMETER	UNITS	TARGET	FOUND	%RECV	RECV CRIT
06/24/92	CCS*200*1	38432*EC	DALAPON	UG/L	1480000	1490000	101	80-120
06/24/92	CCS*200*1	82052*EC	DICAMBA (BANVEL)	UG/L	3430000	3510000	102	80-120
06/24/92	CCS*200*1	38491*EC	MCPP	UG/L	133000	163000	123	80-120
06/24/92	CCS*200*1	39151*EC	MCPA	UG/L	236000	255000	108	80-120
06/24/92	CCS*200*1	98665*EC	DICHLOROPROP	UG/L	1410000	1410000	100.0	80-120
06/24/92	CCS*200*1	39730*EC	2,4-D, TOTAL	UG/L	1100000	1210000	110	80-120
06/24/92	CCS*200*1	39045*EC	2,4,5-TP/SILVEX+DER.	UG/L	5730000	5740000	100	80-120
06/24/92	CCS*200*1	39740*EC	2,4,5-T WATER	UG/L	4740000	4840000	102	80-120
06/24/92	CCS*200*1	38779*EC	DINOSEB	UG/L	4550000	4570000	100	80-120
06/24/92	CCS*200*1	38745*EC	2,4-DB	UG/L	713000	719000	101	80-120
06/24/92	CCS*200*2	38432*EC	DALAPON	UG/L	1480000	1460000	98.6	80-120
06/24/92	CCS*200*2	82052*EC	DICAMBA (BANVEL)	UG/L	3430000	3510000	102	80-120
06/24/92	CCS*200*2	38491*EC	MCPP	UG/L	133000	176000	132	80-120
06/24/92	CCS*200*2	39151*EC	MCPA	UG/L	236000	242000	103	80-120
06/24/92	CCS*200*2	98665*EC	DICHLOROPROP	UG/L	1410000	1390000	98.6	80-120
06/24/92	CCS*200*2	39730*EC	2,4-D, TOTAL	UG/L	1100000	1220000	111	80-120
06/24/92	CCS*200*2	39045*EC	2,4,5-TP/SILVEX+DER.	UG/L	5730000	5690000	99.3	80-120
06/24/92	CCS*200*2	39740*EC	2,4,5-T WATER	UG/L	4740000	4740000	100.0	80-120
06/24/92	CCS*200*2	38779*EC	DINOSEB	UG/L	4550000	4480000	98.5	80-120
06/24/92	CCS*200*2	38745*EC	2,4-DB	UG/L	713000	695000	97.5	80-120
06/24/92	CCS*200*3	38432*EC	DALAPON	UG/L	1480000	1480000	100.0	80-120
06/24/92	CCS*200*3	82052*EC	DICAMBA (BANVEL)	UG/L	3430000	3590000	105	80-120
06/24/92	CCS*200*3	38491*EC	MCPP	UG/L	133000	181000	136	80-120
06/24/92	CCS*200*3	39151*EC	MCPA	UG/L	236000	290000	123	80-120
06/24/92	CCS*200*3	98665*EC	DICHLOROPROP	UG/L	1410000	1450000	103	80-120
06/24/92	CCS*200*3	39730*EC	2,4-D, TOTAL	UG/L	1100000	1210000	110	80-120
06/24/92	CCS*200*3	39045*EC	2,4,5-TP/SILVEX+DER.	UG/L	5730000	5850000	102	80-120
06/24/92	CCS*200*3	39740*EC	2,4,5-T WATER	UG/L	4740000	4890000	103	80-120
06/24/92	CCS*200*3	38779*EC	DINOSEB	UG/L	4550000	4640000	102	80-120
06/24/92	CCS*200*3	38745*EC	2,4-DB	UG/L	713000	766000	107	80-120
06/24/92	CCS*200*4	38432*EC	DALAPON	UG/L	1480000	1480000	100.0	80-120
06/24/92	CCS*200*4	82052*EC	DICAMBA (BANVEL)	UG/L	3430000	3550000	103	80-120
06/24/92	CCS*200*4	38491*EC	MCPP	UG/L	133000	119000	89.5	80-120
06/24/92	CCS*200*4	39151*EC	MCPA	UG/L	236000	249000	106	80-120
06/24/92	CCS*200*4	98665*EC	DICHLOROPROP	UG/L	1410000	1390000	98.6	80-120
06/24/92	CCS*200*4	39730*EC	2,4-D, TOTAL	UG/L	1100000	1170000	106	80-120
06/24/92	CCS*200*4	39045*EC	2,4,5-TP/SILVEX+DER.	UG/L	5730000	5690000	99.3	80-120
06/24/92	CCS*200*4	39740*EC	2,4,5-T WATER	UG/L	4740000	4760000	100	80-120
06/24/92	CCS*200*4	38779*EC	DINOSEB	UG/L	4550000	4470000	98.2	80-120
06/24/92	CCS*200*4	38745*EC	2,4-DB	UG/L	713000	710000	99.6	80-120

Method Blank Sample Summary

DATE	SAMPLE	STORET	PARAMETER	UNITS	FOUND
06/24/92	MB*ALW2B*1	38432*EC	DALAPON	UG/L	ND
06/24/92	MB*ALW2B*1	82052*EC	DICAMBA (BANVEL)	UG/L	ND
06/24/92	MB*ALW2B*1	38491*EC	MCPP	UG/L	ND
06/24/92	MB*ALW2B*1	39151*EC	MCPA	UG/L	ND
06/24/92	MB*ALW2B*1	98665*EC	DICHLOROPROP	UG/L	ND
06/24/92	MB*ALW2B*1	39730*EC	2,4-D, TOTAL	UG/L	ND
06/24/92	MB*ALW2B*1	39045*EC	2,4,5-TP/SILVEX+DER.	UG/L	ND
06/24/92	MB*ALW2B*1	39740*EC	2,4,5-T WATER	UG/L	ND
06/24/92	MB*ALW2B*1	38779*EC	DINOSEB	UG/L	ND
06/24/92	MB*ALW2B*1	38745*EC	2,4-DB	UG/L	ND

Standard Matrix Spike Recovery Summary

DATE	SAMPLE	STORET	PARAMETER	%RECV	RECV CRIT	UNITS	TARGET	FOUND
06/24/92	SP1*ALW2B*1	82052*EC	DICAMBA (BANVEL)	41.9	21-115	UG/L	2.41	1.01
06/24/92	SP1*ALW2B*1	39730*EC	2,4-D, TOTAL	66.9	9-119	UG/L	2.66	1.78
06/24/92	SP1*ALW2B*1	39045*EC	2,4,5-TP/SILVEX+DER.	85.9	73-103	UG/L	2.48	2.13

Surrogate Spike Recovery Summary

DATE	SAMPLE	STORET	PARAMETER	UNITS	TARGET	FOUND	%RECV	RECV CRIT
06/25/92	MB*ALW2B*1	97404*SUR	DICHLOROPHENYLACETIC ACID	UG/L	2.70	1.90	70.4	80-120
06/25/92	SPX*QC*3	97404*SUR	DICHLOROPHENYLACETIC ACID	UG/L	0.27	0.24	88.9	80-120
06/25/92	SPX*QC*4	97404*SUR	DICHLOROPHENYLACETIC ACID	UG/L	0.27	0.23	85.2	80-120
06/25/92	SP1*ALW2B*1	97404*SUR	DICHLOROPHENYLACETIC ACID	UG/L	2.70	1.98	73.3	80-120
06/25/92	DA*ALW2B*11	97404*SUR	DICHLOROPHENYLACETIC ACID	UG/L	2.70	1.95	72.2	80-120

ESE BATCH : G29117

Surrogate Spike Recovery Summary

DATE	SAMPLE	STORET	PARAMETER	UNITS	TARGET	FOUND	%RECV	RECV CRIT
06/25/92	CCS*200*1	97404*SUR	DICHLOROPHENYLACETIC ACID	UG/L	2730000	2770000	101	80-120
06/25/92	CCS*200*2	97404*SUR	DICHLOROPHENYLACETIC ACID	UG/L	2730000	2710000	99.3	80-120
06/25/92	CCS*200*3	97404*SUR	DICHLOROPHENYLACETIC ACID	UG/L	2730000	2810000	103	80-120
06/25/92	CCS*200*4	97404*SUR	DICHLOROPHENYLACETIC ACID	UG/L	2730000	2740000	100	80-120

ESE BATCH : G29117

Environmental Science and Engineering Analytical Services
Computer QC Checks

Batch No.: G29117 Analysis Date: 06/24/92 Analyst: MARK MATHEWS

	Yes	"Exceptions" No	Comment / Corrective Action
Analysis holding time within criteria?	X		
Extract holding time within criteria?	X		
No. of calibration standards present acceptable?	X		
Curve correlation coefficient >= 0.995?	X		
Calibration curve y-intercept < curve detection limit?	X		
Sample responses within highest standard response?	X		
Method blank present?	X		
Method blank within acceptance criteria?	X		
Standard matrix spike present?	X		
Standard matrix spike within acceptance criteria?	X		
Sample matrix spike present?		X	_____
Sample matrix spike within acceptance criteria?			

Note: Any "NO" answer requires a comment.

OVERRIDE COMMENTS

PROB:SAMPLE MATRIX SPIKE NOT PRESENT.
EXPL:INSUFFICIENT SAMPLE FOR MS AND
MSD.

PROJECT REQUIREMENTS FULFILLED. SEE G29114 FOR MS/MSD./JMHE

Organonitrogen Phosphorus Pesticides

ESE BATCH : G29337
CLASSIFICATION : ORGANOPHOSPHORUS PESTICIDES-SW3510/8140

STATUS :

METHOD BLANK CORRECTION METHOD : NONE

FIELD GRP	PROJECT NUMBER	PROJECT NAME	LAB COORDINATOR
ALW2B	3914042 0201	JMM/ALAMEDA NASCTO-121	JACKIE HARGROVE-ELLI

SAMPLE CODE	CLIENT ID	DATE ANALYZED	TIME ANALYZED
ALW2B*1	M-BG1-GW		
ALW2B*2	M-BG2-GW		
ALW2B*3	M-BG3-GW		
ALW2B*4	M-BG4-GW		
ALW2B*10	EB1		
ALW2B*11	EB2		

ESE BATCH : G29337

Continuing Calibration Verification Sample Summary

DATE	SAMPLE	STORET	PARAMETER	UNITS	TARGET	FOUND	%RECV	RECV CRIT
06/30/92	CCS*QC*1	98671*NP	MEVINPHOS	UG/L	2670000	2120000	79.4	80-120
06/30/92	CCS*QC*1	98672*NP	PHORATE	UG/L	4170000	3300000	79.1	80-120
06/30/92	CCS*QC*1	39357*NP	RONNEL	UG/L	2000000	1690000	84.5	80-120
06/30/92	CCS*QC*1	38932*NP	CHLORPYRIFOS	UG/L	1880000	1600000	85.1	80-120
06/30/92	CCS*QC*1	98670*NP	MERPHOS	UG/L	2140000	1720000	80.4	80-120
06/30/92	CCS*QC*1	38715*NP	BOLSTAR	UG/L	986000	1040000	105	80-120
06/30/92	CCS*QC*1	99897*NP	DICHLORVOS	UG/L	7290000	5690000	78.1	80-120
06/30/92	CCS*QC*1	81758*NP	ETHOPROP	UG/L	4820000	4050000	84.0	80-120
06/30/92	CCS*QC*1	38855*NP	NALED	UG/L	10600000	8560000	80.8	80-120
06/30/92	CCS*QC*1	39560*NP	DEMETON	UG/L	2710000	2340000	86.3	80-120
06/30/92	CCS*QC*1	39570*NP	DIAZINON	UG/L	3180000	2670000	84.0	80-120
06/30/92	CCS*QC*1	81888*NP	DISULFOTON	UG/L	3270000	2780000	85.0	80-120
06/30/92	CCS*QC*1	39600*NP	METHYLPARATHION	UG/L	2150000	1960000	91.2	80-120
06/30/92	CCS*QC*1	39530*NP	MALATHION	UG/L	1780000	1560000	87.6	80-120
06/30/92	CCS*QC*1	98403*NP	FENTHION	UG/L	1610000	1470000	91.3	80-120
06/30/92	CCS*QC*1	39015*NP	ETH'PARATHION	UG/L	1570000	1430000	91.1	80-120
06/30/92	CCS*QC*1	38897*NP	TRICHLORONATE	UG/L	2130000	1910000	89.7	80-120
06/30/92	CCS*QC*1	38877*NP	STIROFOS	UG/L	1100000	1020000	92.7	80-120
06/30/92	CCS*QC*1	38564*NP	TOKUTHION	UG/L	1420000	1320000	93.0	80-120
06/30/92	CCS*QC*1	98669*NP	FENSULFOTHION	UG/L	3160000	3050000	96.5	80-120
06/30/92	CCS*QC*1	39580*NP	GUTHION (METHYL AZINPHOS)	UG/L	5270000	5350000	102	80-120
06/30/92	CCS*QC*1	81293*NP	COUMAPHOS	UG/L	1930000	2120000	110	80-120
06/30/92	CCS*QC*1	39055*NP	SIMAZINE	UG/L	308000	255000	82.8	80-120
06/30/92	CCS*QC*1	82198*NP	BROMACIL	UG/L	196000	183000	93.4	80-120

Method Blank Sample Summary

DATE	SAMPLE	STORET	PARAMETER	UNITS	FOUND
06/30/92	MB*QC*1	98671*NP	MEVINPHOS	UG/L	ND
06/30/92	MB*QC*1	98672*NP	PHORATE	UG/L	ND
06/30/92	MB*QC*1	39357*NP	RONNEL	UG/L	ND
06/30/92	MB*QC*1	38932*NP	CHLORPYRIFOS	UG/L	ND
06/30/92	MB*QC*1	98670*NP	MERPHOS	UG/L	ND
06/30/92	MB*QC*1	38715*NP	BOLSTAR	UG/L	ND
06/30/92	MB*QC*1	99897*NP	DICHLORVOS	UG/L	ND
06/30/92	MB*QC*1	81758*NP	ETHOPROP	UG/L	ND
06/30/92	MB*QC*1	38855*NP	NALED	UG/L	ND
06/30/92	MB*QC*1	39560*NP	DEMETON	UG/L	ND
06/30/92	MB*QC*1	39570*NP	DIAZINON	UG/L	ND
06/30/92	MB*QC*1	81888*NP	DISULFOTON	UG/L	ND
06/30/92	MB*QC*1	39600*NP	METHYLPARATHION	UG/L	ND
06/30/92	MB*QC*1	39530*NP	MALATHION	UG/L	ND
06/30/92	MB*QC*1	98403*NP	FENTHION	UG/L	ND
06/30/92	MB*QC*1	39015*NP	ETH'PARATHION	UG/L	ND
06/30/92	MB*QC*1	38897*NP	TRICHLORONATE	UG/L	ND
06/30/92	MB*QC*1	38877*NP	STIROFOS	UG/L	ND
06/30/92	MB*QC*1	38564*NP	TOKUTHION	UG/L	ND
06/30/92	MB*QC*1	98669*NP	FENSULFOTHION	UG/L	ND
06/30/92	MB*QC*1	39580*NP	GUTHION (METHYL AZINPHOS)	UG/L	ND
06/30/92	MB*QC*1	81293*NP	COUMAPHOS	UG/L	ND
06/30/92	MB*QC*1	39055*NP	SIMAZINE	UG/L	ND
06/30/92	MB*QC*1	82198*NP	BROMACIL	UG/L	ND
06/30/92	MB*QC*2	98671*NP	MEVINPHOS	UG/L	ND
06/30/92	MB*QC*2	98672*NP	PHORATE	UG/L	ND
06/30/92	MB*QC*2	39357*NP	RONNEL	UG/L	ND
06/30/92	MB*QC*2	38932*NP	CHLORPYRIFOS	UG/L	ND
06/30/92	MB*QC*2	98670*NP	MERPHOS	UG/L	ND
06/30/92	MB*QC*2	38715*NP	BOLSTAR	UG/L	ND
06/30/92	MB*QC*2	99897*NP	DICHLORVOS	UG/L	ND
06/30/92	MB*QC*2	81758*NP	ETHOPROP	UG/L	ND
06/30/92	MB*QC*2	38855*NP	NALED	UG/L	ND
06/30/92	MB*QC*2	39560*NP	DEMETON	UG/L	ND
06/30/92	MB*QC*2	39570*NP	DIAZINON	UG/L	ND
06/30/92	MB*QC*2	81888*NP	DISULFOTON	UG/L	ND
06/30/92	MB*QC*2	39600*NP	METHYLPARATHION	UG/L	ND
06/30/92	MB*QC*2	39530*NP	MALATHION	UG/L	ND
06/30/92	MB*QC*2	98403*NP	FENTHION	UG/L	ND
06/30/92	MB*QC*2	39015*NP	ETH'PARATHION	UG/L	ND
06/30/92	MB*QC*2	38897*NP	TRICHLORONATE	UG/L	ND
06/30/92	MB*QC*2	38877*NP	STIROFOS	UG/L	ND
06/30/92	MB*QC*2	38564*NP	TOKUTHION	UG/L	ND
06/30/92	MB*QC*2	98669*NP	FENSULFOTHION	UG/L	ND
06/30/92	MB*QC*2	39580*NP	GUTHION (METHYL AZINPHOS)	UG/L	ND
06/30/92	MB*QC*2	81293*NP	COUMAPHOS	UG/L	ND
06/30/92	MB*QC*2	39055*NP	SIMAZINE	UG/L	ND
06/30/92	MB*QC*2	82198*NP	BROMACIL	UG/L	ND

ESE BATCH : G29337

Standard Matrix Spike Recovery Summary

DATE	SAMPLE	STORET	PARAMETER	%RECV	RECV CRIT	UNITS	TARGET	FOUND
06/30/92	SP*QC*1	39570*NP	DIAZINON	71.8	61-155	UG/L	4.71	3.38
06/30/92	SP*QC*1	39530*NP	MALATHION	66.4	64-134	UG/L	4.88	3.24
06/30/92	SP*QC*1	39015*NP	ETH'PARATHION	82.4	50-130	UG/L	4.89	4.03
06/30/92	SP*QC*1	39580*NP	GUTHION (METHYL AZINPHOS)	77.5	44-146	UG/L	47.6	36.9
06/30/92	SP*QC*2	39570*NP	DIAZINON	94.7	61-155	UG/L	4.71	4.46
06/30/92	SP*QC*2	39530*NP	MALATHION	84.6	64-134	UG/L	4.88	4.13
06/30/92	SP*QC*2	39015*NP	ETH'PARATHION	103.9	50-130	UG/L	4.89	5.08
06/30/92	SP*QC*2	39580*NP	GUTHION (METHYL AZINPHOS)	91.6	44-146	UG/L	47.6	43.6

Sample Matrix Spike Recovery Summary

DATE	SAMPLE	STORET	PARAMETER	%RECV	RECV CRIT	UNSPIKED	UNITS	TARGET	FOUND	RPD
06/30/92	SPM1*ALW2B*2	39570*NP	DIAZINON	81.1	61-155	0.009	UG/L	4.71	3.82	
06/30/92	SPM1*ALW2B*2	39530*NP	MALATHION	82.4	64-134	0.0	UG/L	4.88	4.02	
06/30/92	SPM1*ALW2B*2	39015*NP	ETH'PARATHION	99.4	50-130	0.0	UG/L	4.89	4.86	
06/30/92	SPM1*ALW2B*2	39580*NP	GUTHION (METHYL AZINPHOS)	106.9	44-146	0.0	UG/L	47.6	50.9	
06/30/92	SPM2*ALW2B*2	39570*NP	DIAZINON	95.1	61-155	0.009	UG/L	4.71	4.48	16.0
06/30/92	SPM2*ALW2B*2	39530*NP	MALATHION	90.4	64-134	0.0	UG/L	4.88	4.41	9.37
06/30/92	SPM2*ALW2B*2	39015*NP	ETH'PARATHION	120.9	50-130	0.0	UG/L	4.89	5.91	19.6
06/30/92	SPM2*ALW2B*2	39580*NP	GUTHION (METHYL AZINPHOS)	108.0	44-146	0.0	UG/L	47.6	51.4	0.930

Surrogate Spike Recovery Summary

DATE	SAMPLE	STORET	PARAMETER	UNITS	TARGET	FOUND	%RECV	RECV CRIT
06/30/92	MB*QC*1	77881*SUR	TRIPHENYLPHOSPHATE	UG/L	10.1	8.24	81.6	39-147
06/30/92	MB*QC*2	77881*SUR	TRIPHENYLPHOSPHATE	UG/L	10.1	7.10	70.3	39-147
06/30/92	SP*QC*1	77881*SUR	TRIPHENYLPHOSPHATE	UG/L	10.1	7.34	72.7	39-147
06/30/92	SP*QC*2	77881*SUR	TRIPHENYLPHOSPHATE	UG/L	10.1	9.02	89.3	39-147
06/30/92	SPM1*ALW2B*2	77881*SUR	TRIPHENYLPHOSPHATE	UG/L	10.1	10.4	103	39-147
06/30/92	SPM2*ALW2B*2	77881*SUR	TRIPHENYLPHOSPHATE	UG/L	10.1	8.84	87.5	39-147
06/30/92	DA*ALW2B*1	77881*SUR	TRIPHENYLPHOSPHATE	UG/L	10.1	10.3	102	39-147
06/30/92	DA*ALW2B*2	77881*SUR	TRIPHENYLPHOSPHATE	UG/L	10.1	8.97	88.8	39-147
06/30/92	DA*ALW2B*3	77881*SUR	TRIPHENYLPHOSPHATE	UG/L	10.1	10.6	105	39-147
06/30/92	DA*ALW2B*4	77881*SUR	TRIPHENYLPHOSPHATE	UG/L	10.1	8.64	85.5	39-147
06/30/92	DA*ALW2B*10	77881*SUR	TRIPHENYLPHOSPHATE	UG/L	10.1	7.55	74.8	39-147
06/30/92	DA*ALW2B*11	77881*SUR	TRIPHENYLPHOSPHATE	UG/L	10.1	9.18	90.9	39-147
06/30/92	CCS*QC*1	77881*SUR	TRIPHENYLPHOSPHATE	UG/L	1660000	1600000	96.4	39-147

ESE BATCH : G29337

Environmental Science and Engineering Analytical Services

Computer QC Checks

Batch No.: G29337 Analysis Date: 06/30/92 Analyst: ANLIN REN

	Yes	"Exceptions" No	Comment / Corrective Action
Analysis holding time within criteria?	X		
Extract holding time within criteria?	X		
No. of calibration standards present acceptable?	X		
Curve correlation coefficient >= 0.995?	X		
Calibration curve y-intercept < curve detection limit?	X		
Sample responses within highest standard response?	X		
Method blank present?	X		
Method blank within acceptance criteria?	X		
Standard matrix spike present?	X		
Standard matrix spike within acceptance criteria?	X		
Sample matrix spike present?	X		
Sample matrix spike within acceptance criteria?	X		
Sample matrix spike duplicate present?	X		
Sample matrix spike duplicate within acceptance criteria?	X		
Surrogate present?	X		
Surrogate within acceptance criteria?	X		

Note: Any "NO" answer requires a comment.

EDB

ESE BATCH : G29043
CLASSIFICATION : EDB - E504

STATUS : FINAL

METHOD BLANK CORRECTION METHOD : NONE

FIELD GRP	PROJECT NUMBER	PROJECT NAME	LAB COORDINATOR
ALW2B	3914042 0201	JMM/ALAMEDA NASCTO-121	JACKIE HARGROVE-ELLI

SAMPLE CODE	CLIENT ID	DATE ANALYZED	TIME ANALYZED
ALW2B*1	M-BG1-GW		
ALW2B*2	M-BG2-GW		
ALW2B*3	M-BG3-GW		
ALW2B*4	M-BG4-GW		
ALW2B*10	EB1		
ALW2B*11	EB2		

Continuing Calibration Verification Sample Summary

DATE	SAMPLE	STORET	PARAMETER		UNITS	TARGET	FOUND	%RECV	RECV CRIT
06/23/92	CCS*QC*1	77651*EC	1,2-DIBROMOETHANE	(EDB)	UG/L	6710	6630	98.8	80-120
06/23/92	CCS*CON*2	77651*EC	1,2-DIBROMOETHANE	(EDB)	UG/L	28800	32100	111	80-120

Method Blank Sample Summary

DATE	SAMPLE	STORET	PARAMETER		UNITS	FOUND
06/23/92	MB*QC*1	77651*EC	1,2-DIBROMOETHANE	(EDB)	UG/L	ND

Standard Matrix Spike Recovery Summary

DATE	SAMPLE	STORET	PARAMETER		%RECV	RECV CRIT	UNITS	TARGET	FOUND
06/23/92	SP1*QC*1	77651*EC	1,2-DIBROMOETHANE	(EDB)	97.3	63-133	UG/L	0.333	0.324
06/23/92	SP2*QC*1	77651*EC	1,2-DIBROMOETHANE	(EDB)	98.2	63-133	UG/L	0.333	0.327

Sample Matrix Spike Recovery Summary

DATE	SAMPLE	STORET	PARAMETER		%RECV	RECV CRIT	UNSPIKED	UNITS	TARGET	FOUND	RPD
06/23/92	SPM1*ALW2B*1	77651*EC	1,2-DIBROMOETHANE	(EDB)	96.1	63-133	0.0	UG/L	0.333	0.320	
06/23/92	SPM2*ALW2B*1	77651*EC	1,2-DIBROMOETHANE	(EDB)	97.0	63-133	0.0	UG/L	0.333	0.323	0.932

Surrogate Spike Recovery Summary

DATE	SAMPLE	STORET	PARAMETER	UNITS	TARGET	FOUND	%RECV	RECV CRIT
06/23/92	MB*QC*1	97606*SUR	2-BROMO-1-CHLOROPROPANE	UG/L	100.0	97.1	97.1	80-120
06/23/92	CCS*QC*1	97606*SUR	2-BROMO-1-CHLOROPROPANE	UG/L	100.0	98.5	98.5	80-120
06/23/92	CCS*CON*2	97606*SUR	2-BROMO-1-CHLOROPROPANE	UG/L	70200	73100	104	80-120
06/23/92	SP1*QC*1	97606*SUR	2-BROMO-1-CHLOROPROPANE	UG/L	100.0	98.6	98.6	80-120
06/23/92	SP2*QC*1	97606*SUR	2-BROMO-1-CHLOROPROPANE	UG/L	100.0	101	101	80-120
06/23/92	SPM1*ALW2B*1	97606*SUR	2-BROMO-1-CHLOROPROPANE	UG/L	100.0	97.3	97.3	80-120
06/23/92	SPM2*ALW2B*1	97606*SUR	2-BROMO-1-CHLOROPROPANE	UG/L	100.0	98.5	98.5	80-120
06/23/92	DA*ALW2B*1	97606*SUR	2-BROMO-1-CHLOROPROPANE	UG/L	100.0	96.5	96.5	80-120
06/23/92	DA*ALW2B*2	97606*SUR	2-BROMO-1-CHLOROPROPANE	UG/L	100.0	94.7	94.7	80-120
06/23/92	DA*ALW2B*3	97606*SUR	2-BROMO-1-CHLOROPROPANE	UG/L	100.0	94.3	94.3	80-120
06/23/92	DA*ALW2B*4	97606*SUR	2-BROMO-1-CHLOROPROPANE	UG/L	100.0	97.8	97.8	80-120
06/23/92	DA*ALW2B*10	97606*SUR	2-BROMO-1-CHLOROPROPANE	UG/L	100.0	96.6	96.6	80-120
06/23/92	DA*ALW2B*11	97606*SUR	2-BROMO-1-CHLOROPROPANE	UG/L	100.0	100.0	100.0	80-120

ESE BATCH : G29043

Environmental Science and Engineering Analytical Services

Computer QC Checks

Batch No.: G29043 Analysis Date: 06/23/92 Analyst: TIMOTHY RACKI

	Yes	"Exceptions" No	Comment / Corrective Action
Analysis holding time within criteria?	X		
Extract holding time within criteria?	X		
No. of calibration standards present acceptable?	X		
Curve correlation coefficient >= 0.995?	X		
Calibration curve y-intercept < curve detection limit?	X		
Sample responses within highest standard response?	X		
Method blank present?	X		
Method blank within acceptance criteria?	X		
Standard matrix spike present?	X		
Standard matrix spike within acceptance criteria?	X		
Sample matrix spike present?	X		
Sample matrix spike within acceptance criteria?	X		
Sample matrix spike duplicate present?	X		
Sample matrix spike duplicate within acceptance criteria?	X		

Note: Any "NO" answer requires a comment.

Monuron & Diuron

ESE BATCH : G29154
CLASSIFICATION : MONURON AND DIURON - EPA 632

STATUS : FINAL

METHOD BLANK CORRECTION METHOD : NONE

FIELD GRP	PROJECT NUMBER	PROJECT NAME	LAB COORDINATOR
ALW2B	3914042 0201	JMM/ALAMEDA NASCTO-121	JACKIE HARGROVE-ELLI

SAMPLE CODE	CLIENT ID	DATE ANALYZED	TIME ANALYZED
ALW2B*1	M-BG1-GW	06/25/92	10:32PM
ALW2B*2	M-BG2-GW	06/25/92	11:36PM
ALW2B*3	M-BG3-GW	06/26/92	12:40AM
ALW2B*4	M-BG4-GW	06/26/92	01:44AM
ALW2B*10	EB1	06/26/92	02:48AM
ALW2B*11	EB2	06/26/92	03:52AM

Continuing Calibration Verification Sample Summary

DATE	SAMPLE	STORET	PARAMETER	UNITS	TARGET	FOUND	%RECV	RECV CRIT
06/25/92	CCV*062492*1	38511*LC	MONURON	UG/L	278	272	97.8	80-120
06/25/92	CCV*062492*1	39650*LC	DIURON	UG/L	339	335	98.8	80-120

Continuing Calibration Verification Sample Summary

DATE	SAMPLE	STORET	PARAMETER	UNITS	TARGET	FOUND	%RECV	RECV CRIT
06/25/92	CCS*062592*1	38511*LC	MONURON	UG/L	545000	562000	103	80-120
06/25/92	CCS*062592*1	39650*LC	DIURON	UG/L	629000	640000	102	80-120
06/25/92	CCS*062592*2	38511*LC	MONURON	UG/L	545000	595000	109	80-120
06/25/92	CCS*062592*2	39650*LC	DIURON	UG/L	629000	675000	107	80-120
06/25/92	CCS*062692*1	38511*LC	MONURON	UG/L	545000	563000	103	80-120
06/25/92	CCS*062692*1	39650*LC	DIURON	UG/L	629000	636000	101	80-120

Method Blank Sample Summary

DATE	SAMPLE	STORET	PARAMETER	UNITS	FOUND
06/25/92	MB*QC*1	38511*LC	MONURON	UG/L	ND
06/25/92	MB*QC*1	39650*LC	DIURON	UG/L	ND
06/25/92	MB*QC*2	38511*LC	MONURON	UG/L	ND
06/25/92	MB*QC*2	39650*LC	DIURON	UG/L	ND

Standard Matrix Spike Recovery Summary

DATE	SAMPLE	STORET	PARAMETER	%RECV	RECV CRIT	UNITS	TARGET	FOUND
06/25/92	SP1*QC*1	39650*LC	DIURON	81.2	60-118	UG/L	2.60	2.11
06/25/92	SP1*QC*2	39650*LC	DIURON	92.3	60-118	UG/L	2.60	2.40

Sample Matrix Spike Recovery Summary

DATE	SAMPLE	STORET	PARAMETER	%RECV	RECV CRIT	UNSPIKED	UNITS	TARGET	FOUND	RPD
06/25/92	SPM1*ALW2B*3	39650*LC	DIURON	80.4	60-118	0.0	UG/L	2.60	2.09	
06/25/92	SPM2*ALW2B*3	39650*LC	DIURON	75.0	60-118	0.0	UG/L	2.60	1.95	6.82

ESE BATCH : G29154

Environmental Science and Engineering Analytical Services
Computer QC Checks

Batch No.: G29154 Analysis Date: 06/25/92 Analyst: CURTIS CAMPBELL

	Yes	"Exceptions" No	Comment / Corrective Action
Analysis holding time within criteria?	X		
Extract holding time within criteria?	X		
No. of calibration standards present acceptable?	X		
Curve correlation coefficient >= 0.995?	X		
Calibration curve y-intercept < curve detection limit?	X		
Sample responses within highest standard response?	X		
Method blank present?	X		
Method blank within acceptance criteria?	X		
Standard matrix spike present?	X		
Standard matrix spike within acceptance criteria?	X		
Sample matrix spike present?	X		
Sample matrix spike within acceptance criteria?	X		
Sample matrix spike duplicate present?	X		
Sample matrix spike duplicate within acceptance criteria?	X		

Note: Any "NO" answer requires a comment.

Glyphosate

ESE BATCH : G29003
CLASSIFICATION : GLYPHOSATE - EPA 547-MOD.

STATUS : FINAL

METHOD BLANK CORRECTION METHOD : NONE

FIELD GRP	PROJECT NUMBER	PROJECT NAME	LAB COORDINATOR
ALW2B	3914042 0201	JMM/ALAMEDA NASCTO-121	JACKIE HARGROVE-ELLI

SAMPLE CODE	CLIENT ID	DATE ANALYZED	TIME ANALYZED
ALW2B*1	M-BG1-GW	06/22/92	11:37PM
ALW2B*2	M-BG2-GW	06/23/92	12:01AM
ALW2B*3	M-BG3-GW	06/23/92	12:25AM
ALW2B*4	M-BG4-GW	06/23/92	12:49AM
ALW2B*10	EB1	06/23/92	01:14AM
ALW2B*11	EB2	06/23/92	01:38AM

Continuing Calibration Verification Sample Summary

DATE	SAMPLE	STORET	PARAMETER	UNITS	TARGET	FOUND	%RECV	RECV CRIT
06/22/92	CCV*062292*1	97913*LC	GLYPHOSATE	UG/L	203	184	90.6	80-120

Continuing Calibration Verification Sample Summary

DATE	SAMPLE	STORET	PARAMETER	UNITS	TARGET	FOUND	%RECV	RECV CRIT
06/22/92	CCS*062392*1	97913*LC	GLYPHOSATE	UG/L	9860000	9810000	99.5	80-120
06/22/92	CCS*062392*2	97913*LC	GLYPHOSATE	UG/L	9860000	9540000	96.8	80-120

Method Blank Sample Summary

DATE	SAMPLE	STORET	PARAMETER	UNITS	FOUND
06/22/92	MB*QC*1	97913*LC	GLYPHOSATE	UG/L	ND

Standard Matrix Spike Recovery Summary

DATE	SAMPLE	STORET	PARAMETER	%RECV	RECV CRIT	UNITS	TARGET	FOUND
06/22/92	SP1*QC*1	97913*LC	GLYPHOSATE	85.2	60-120	UG/L	203	173

Sample Matrix Spike Recovery Summary

DATE	SAMPLE	STORET	PARAMETER	%RECV	RECV CRIT	UNSPIKED	UNITS	TARGET	FOUND	RPD
06/22/92	SPM1*ALW2B*4	97913*LC	GLYPHOSATE	27.9	60-120	1.26	UG/L	203	56.7	
06/22/92	SPM2*ALW2B*4	97913*LC	GLYPHOSATE	26.4	60-120	1.26	UG/L	203	53.6	5.88

ESE BATCH : G29003

Environmental Science and Engineering Analytical Services

Computer QC Checks

Batch No.: G29003 Analysis Date: 06/22/92 Analyst: CURTIS CAMPBELL

	Yes	"Exceptions" No	Comment / Corrective Action
Analysis holding time within criteria?	X		
Extract holding time within criteria?	X		
No. of calibration standards present acceptable?	X		
Curve correlation coefficient >= 0.995?	X		
Calibration curve y-intercept < curve detection limit?	X		
Sample responses within highest standard response?	X		
Method blank present?	X		
Method blank within acceptance criteria?	X		
Standard matrix spike present?	X		
Standard matrix spike within acceptance criteria?	X		
Sample matrix spike present?	X		
Sample matrix spike within acceptance criteria?		X	97913*LC
Sample matrix spike duplicate present?	X		
Sample matrix spike duplicate within acceptance criteria?		X	97913*LC

Note: Any "NO" answer requires a comment.

OVERRIDE COMMENTS

PROB:SAMPLE MATRIX SPIKE NOT WITHIN
ACCEPTANCE CRITERIA.
EXPL:SPIKED ANALYTE POSSIBLY DE-
COMPOSED DUE TO UNKNOWN A-
GENT IN MATRIX.

PROB:SAMPLE MATRIX SPIKE DUPLICATE
NOT WITHIN ACCEPTANCE CRITERIA.
EXPL:SEE ABOVE.

STANDARD MATRIX SPIKE WITHIN CRITERIA. MS/MSD MAY INDICATE A MATRIX INTERFERENCE AND SAMPLE CONCENTRATIONS SHOULD BE CONSIDERED AS ESTIMATES./JMHE

Total Recoverable Petroleum Hydrocarbons plus Oil & Grease

ESE BATCH : G29061
CLASSIFICATION : OIL & GREASE - E413.2

STATUS : FINAL

METHOD BLANK CORRECTION METHOD : NONE

FIELD GRP	PROJECT NUMBER	PROJECT NAME	LAB COORDINATOR
ALW2B	3914042 0201	JMM/ALAMEDA NASCTO-121	JACKIE HARGROVE-ELLI

SAMPLE CODE	CLIENT ID	DATE ANALYZED	TIME ANALYZED
ALW2B*1	M-BG1-GW		
ALW2B*2	M-BG2-GW		
ALW2B*3	M-BG3-GW		
ALW2B*4	M-BG4-GW		
ALW2B*10	EB1		
ALW2B*11	EB2		

Initial Calibration Blank Summary

DATE	SAMPLE	STORET	PARAMETER	UNITS	FOUND
06/24/92	ICB*QC*1	560*1	OIL&GR,IR	MG/L	ND
06/24/92	ICB*QC*1	45501*1	HYDROCARBONS,PETRO	MG/L	ND

Continuing Calibration Blank Sample Summary

DATE	SAMPLE	STORET	PARAMETER	UNITS	FOUND
06/24/92	CCB*QC*1	560*1	OIL&GR,IR	MG/L	ND
06/24/92	CCB*QC*1	45501*1	HYDROCARBONS,PETRO	MG/L	ND
06/24/92	CCB*QC*2	560*1	OIL&GR,IR	MG/L	ND
06/24/92	CCB*QC*2	45501*1	HYDROCARBONS,PETRO	MG/L	ND

Initial Calibration Verification Sample Summary

DATE	SAMPLE	STORET	PARAMETER	UNITS	TARGET	FOUND	%RECV	RECV CRIT
06/24/92	ICV*QC*1	560*1	OIL&GR,IR	MG/L	34.1	34.7	102	80-120
06/24/92	ICV*QC*1	45501*1	HYDROCARBONS,PETRO	MG/L	34.1	34.7	102	80-120

Continuing Calibration Verification Sample Summary

DATE	SAMPLE	STORET	PARAMETER	UNITS	TARGET	FOUND	%RECV	RECV CRIT
06/24/92	CCV*QC*1	560*1	OIL&GR,IR	MG/L	34.1	35.2	103	80-120
06/24/92	CCV*QC*1	45501*1	HYDROCARBONS,PETRO	MG/L	34.1	35.2	103	80-120
06/24/92	CCV*QC*2	560*1	OIL&GR,IR	MG/L	34.1	34.7	102	80-120
06/24/92	CCV*QC*2	45501*1	HYDROCARBONS,PETRO	MG/L	34.1	34.7	102	80-120

Method Blank Sample Summary

DATE	SAMPLE	STORET	PARAMETER	UNITS	FOUND
06/24/92	MB*QC*1	560*1	OIL&GR,IR	MG/L	0.08
06/24/92	MB*QC*1	45501*1	HYDROCARBONS,PETRO	MG/L	0.02

Standard Matrix Spike Recovery Summary

DATE	SAMPLE	STORET	PARAMETER	%RECV	RECV CRIT	UNITS	TARGET	FOUND
06/24/92	SP1*QC*1	560*1	OIL&GR,IR	88.4	70-116	MG/L	4.3	3.8
06/24/92	SP1*QC*1	45501*1	HYDROCARBONS,PETRO	88.4	76-122	MG/L	4.3	3.8
06/24/92	SP2*QC*1	560*1	OIL&GR,IR	90.7	70-116	MG/L	4.3	3.9
06/24/92	SP2*QC*1	45501*1	HYDROCARBONS,PETRO	90.7	76-122	MG/L	4.3	3.9

Sample Matrix Spike Recovery Summary

DATE	SAMPLE	STORET	PARAMETER	%RECV	RECV CRIT	UNSPIKED	UNITS	TARGET	FOUND	RPD
06/24/92	SPM1*ALW2B*1	560*1	OIL&GR,IR	88.9	70-116	0.1	MG/L	4.5	4.0	
06/24/92	SPM1*ALW2B*1	45501*1	HYDROCARBONS,PETRO	88.9	76-122	0.08	MG/L	4.5	4.0	
06/24/92	SPM2*ALW2B*1	560*1	OIL&GR,IR	77.8	70-116	0.1	MG/L	5.4	4.2	12.4
06/24/92	SPM2*ALW2B*1	45501*1	HYDROCARBONS,PETRO	77.8	76-122	0.08	MG/L	5.4	4.2	12.4

ESE BATCH : G29061

Environmental Science and Engineering Analytical Services
Computer QC Checks

Batch No.: G29061 Analysis Date: 06/24/92 Analyst: ROBERT KEMERAIT, JR.

	Yes	"Exceptions" No	Comment / Corrective Action
Analysis holding time within criteria?	X		
Extract holding time within criteria?	X		
No. of calibration standards present acceptable?	X		
Curve correlation coefficient >= 0.995?	X		
Calibration curve y-intercept < curve detection limit?	X		
Sample responses within highest standard response?	X		
Method blank present?	X		
Method blank within acceptance criteria?	X		
Standard matrix spike present?	X		
Standard matrix spike within acceptance criteria?	X		
Sample matrix spike present?	X		
Sample matrix spike within acceptance criteria?	X		
Sample matrix spike duplicate present?	X		
Sample matrix spike duplicate within acceptance criteria?	X		

Note: Any "NO" answer requires a comment.

ICAP Metals

ESE BATCH : G28839
CLASSIFICATION : TAL METALS - CLP SOW 3/90

STATUS : FINAL

METHOD BLANK CORRECTION METHOD : NONE

FIELD GRP	PROJECT NUMBER	PROJECT NAME	LAB COORDINATOR
ALW2B	3914042 0201	JMM/ALAMEDA NASCTO-121	JACKIE HARGROVE-ELLI

SAMPLE CODE	CLIENT ID	DATE ANALYZED	TIME ANALYZED
ALW2B*1	M-BG1-GW	06/18/92	10:47AM
ALW2B*2	M-BG2-GW	06/18/92	10:52AM
ALW2B*3	M-BG3-GW	06/18/92	10:54AM
ALW2B*4	M-BG4-GW	06/18/92	10:57AM
ALW2B*10	EB1	06/18/92	11:47AM
ALW2B*11	EB2	06/18/92	11:49AM
ALW2B*12	EB3	06/18/92	11:52AM
ALW2B*13	B-05PS-01	06/18/92	11:54AM
ALW2B*14	B-05PS-02	06/18/92	11:57AM
ALW2B*15	B-05PS-03	06/18/92	11:59AM
ALW2B*16	B-05PS-04	06/18/92	12:02PM
ALW2B*17	B-05PS-05	06/18/92	12:04PM
ALW2B*23	B-05PS-DUP	06/18/92	12:08PM
ALW2B*24	B-05WT-01	06/18/92	12:11PM
ALW2B*25	B-05WT-02	06/18/92	02:08PM
ALW2B*26	B-05HW-01	06/18/92	02:11PM
ALW2B*27	B-05BS-01	06/18/92	02:25PM

ESE BATCH : G28839

Initial Calibration Blank Summary

DATE	SAMPLE	STORET	PARAMETER	UNITS	FOUND
06/18/92	ICB*QC*1	1077*CLP90	SILVER,TOTAL	UG/L	2.2
06/18/92	ICB*QC*1	1105*CLP90	ALUMINUM,TOTAL	UG/L	9.0
06/18/92	ICB*QC*1	1007*CLP90	BARIUM,TOTAL	UG/L	ND
06/18/92	ICB*QC*1	1012*CLP90	BERYLLIUM, TOTAL	UG/L	ND
06/18/92	ICB*QC*1	82032*CLP90	CALCIUM,TOTAL	UG/L	2.6
06/18/92	ICB*QC*1	1027*CLP90	CADMIUM,TOTAL	UG/L	1.0
06/18/92	ICB*QC*1	1037*CLP90	COBALT,TOTAL	UG/L	0.9
06/18/92	ICB*QC*1	1034*CLP90	CHROMIUM,TOTAL	UG/L	0.3
06/18/92	ICB*QC*1	1042*CLP90	COPPER,TOTAL	UG/L	ND
06/18/92	ICB*QC*1	1045*CLP90	IRON,TOTAL	UG/L	ND
06/18/92	ICB*QC*1	82034*CLP90	POTASSIUM,TOTAL	UG/L	270
06/18/92	ICB*QC*1	927*CLP90	MAGNESIUM,TOTAL	UG/L	20.0
06/18/92	ICB*QC*1	1055*CLP90	MANGANESE,TOTAL	UG/L	0.3
06/18/92	ICB*QC*1	82035*CLP90	SODIUM,TOTAL	UG/L	19.6
06/18/92	ICB*QC*1	1067*CLP90	NICKEL,TOTAL	UG/L	ND
06/18/92	ICB*QC*1	1097*CLP90	ANTIMONY,TOTAL	UG/L	4.7
06/18/92	ICB*QC*1	1087*CLP90	VANADIUM,TOTAL	UG/L	ND
06/18/92	ICB*QC*1	1092*CLP90	ZINC,TOTAL	UG/L	ND

Continuing Calibration Blank Sample Summary

DATE	SAMPLE	STORET	PARAMETER	UNITS	FOUND
06/18/92	CCB*QC*1	1077*CLP90	SILVER,TOTAL	UG/L	0.3
06/18/92	CCB*QC*1	1105*CLP90	ALUMINUM,TOTAL	UG/L	4.3
06/18/92	CCB*QC*1	1007*CLP90	BARIUM,TOTAL	UG/L	ND
06/18/92	CCB*QC*1	1012*CLP90	BERYLLIUM, TOTAL	UG/L	ND
06/18/92	CCB*QC*1	82032*CLP90	CALCIUM,TOTAL	UG/L	ND
06/18/92	CCB*QC*1	1027*CLP90	CADMIUM,TOTAL	UG/L	0.2
06/18/92	CCB*QC*1	1037*CLP90	COBALT,TOTAL	UG/L	1.8
06/18/92	CCB*QC*1	1034*CLP90	CHROMIUM,TOTAL	UG/L	ND
06/18/92	CCB*QC*1	1042*CLP90	COPPER,TOTAL	UG/L	ND
06/18/92	CCB*QC*1	1045*CLP90	IRON,TOTAL	UG/L	ND
06/18/92	CCB*QC*1	82034*CLP90	POTASSIUM,TOTAL	UG/L	169
06/18/92	CCB*QC*1	927*CLP90	MAGNESIUM,TOTAL	UG/L	14.5
06/18/92	CCB*QC*1	1055*CLP90	MANGANESE,TOTAL	UG/L	ND
06/18/92	CCB*QC*1	82035*CLP90	SODIUM,TOTAL	UG/L	24.7
06/18/92	CCB*QC*1	1067*CLP90	NICKEL,TOTAL	UG/L	ND
06/18/92	CCB*QC*1	1097*CLP90	ANTIMONY,TOTAL	UG/L	1.9
06/18/92	CCB*QC*1	1087*CLP90	VANADIUM,TOTAL	UG/L	ND
06/18/92	CCB*QC*1	1092*CLP90	ZINC,TOTAL	UG/L	ND
06/18/92	CCB*QC*2	1077*CLP90	SILVER,TOTAL	UG/L	3.1
06/18/92	CCB*QC*2	1105*CLP90	ALUMINUM,TOTAL	UG/L	16.9
06/18/92	CCB*QC*2	1007*CLP90	BARIUM,TOTAL	UG/L	ND
06/18/92	CCB*QC*2	1012*CLP90	BERYLLIUM, TOTAL	UG/L	1.2
06/18/92	CCB*QC*2	82032*CLP90	CALCIUM,TOTAL	UG/L	ND
06/18/92	CCB*QC*2	1027*CLP90	CADMIUM,TOTAL	UG/L	ND
06/18/92	CCB*QC*2	1037*CLP90	COBALT,TOTAL	UG/L	ND
06/18/92	CCB*QC*2	1034*CLP90	CHROMIUM,TOTAL	UG/L	0.8
06/18/92	CCB*QC*2	1042*CLP90	COPPER,TOTAL	UG/L	ND
06/18/92	CCB*QC*2	1045*CLP90	IRON,TOTAL	UG/L	2.0
06/18/92	CCB*QC*2	82034*CLP90	POTASSIUM,TOTAL	UG/L	352
06/18/92	CCB*QC*2	927*CLP90	MAGNESIUM,TOTAL	UG/L	32.7
06/18/92	CCB*QC*2	1055*CLP90	MANGANESE,TOTAL	UG/L	0.3
06/18/92	CCB*QC*2	82035*CLP90	SODIUM,TOTAL	UG/L	28.1
06/18/92	CCB*QC*2	1067*CLP90	NICKEL,TOTAL	UG/L	2.9
06/18/92	CCB*QC*2	1097*CLP90	ANTIMONY,TOTAL	UG/L	7.8
06/18/92	CCB*QC*2	1087*CLP90	VANADIUM,TOTAL	UG/L	3.3
06/18/92	CCB*QC*2	1092*CLP90	ZINC,TOTAL	UG/L	ND
06/18/92	CCB*QC*3	1077*CLP90	SILVER,TOTAL	UG/L	1.5
06/18/92	CCB*QC*3	1105*CLP90	ALUMINUM,TOTAL	UG/L	10.4
06/18/92	CCB*QC*3	1007*CLP90	BARIUM,TOTAL	UG/L	ND
06/18/92	CCB*QC*3	1012*CLP90	BERYLLIUM, TOTAL	UG/L	2.3
06/18/92	CCB*QC*3	82032*CLP90	CALCIUM,TOTAL	UG/L	ND
06/18/92	CCB*QC*3	1027*CLP90	CADMIUM,TOTAL	UG/L	ND
06/18/92	CCB*QC*3	1037*CLP90	COBALT,TOTAL	UG/L	0.9
06/18/92	CCB*QC*3	1034*CLP90	CHROMIUM,TOTAL	UG/L	ND
06/18/92	CCB*QC*3	1042*CLP90	COPPER,TOTAL	UG/L	ND
06/18/92	CCB*QC*3	1045*CLP90	IRON,TOTAL	UG/L	1.5
06/18/92	CCB*QC*3	82034*CLP90	POTASSIUM,TOTAL	UG/L	176
06/18/92	CCB*QC*3	927*CLP90	MAGNESIUM,TOTAL	UG/L	14.5
06/18/92	CCB*QC*3	1055*CLP90	MANGANESE,TOTAL	UG/L	0.2
06/18/92	CCB*QC*3	82035*CLP90	SODIUM,TOTAL	UG/L	15.7
06/18/92	CCB*QC*3	1067*CLP90	NICKEL,TOTAL	UG/L	2.6
06/18/92	CCB*QC*3	1097*CLP90	ANTIMONY,TOTAL	UG/L	4.6
06/18/92	CCB*QC*3	1087*CLP90	VANADIUM,TOTAL	UG/L	ND
06/18/92	CCB*QC*3	1092*CLP90	ZINC,TOTAL	UG/L	ND
06/18/92	CCB*QC*4	1077*CLP90	SILVER,TOTAL	UG/L	0.7

ESE BATCH : G28839

Continuing Calibration Blank Sample Summary

DATE	SAMPLE	STORET	PARAMETER	UNITS	FOUND
06/18/92	CCB*QC*4	1105*CLP90	ALUMINUM,TOTAL	UG/L	5.7
06/18/92	CCB*QC*4	1007*CLP90	BARIUM,TOTAL	UG/L	ND
06/18/92	CCB*QC*4	1012*CLP90	BERYLLIUM, TOTAL	UG/L	ND
06/18/92	CCB*QC*4	82032*CLP90	CALCIUM,TOTAL	UG/L	ND
06/18/92	CCB*QC*4	1027*CLP90	CADMIUM,TOTAL	UG/L	0.03
06/18/92	CCB*QC*4	1037*CLP90	COBALT,TOTAL	UG/L	ND
06/18/92	CCB*QC*4	1034*CLP90	CHROMIUM,TOTAL	UG/L	ND
06/18/92	CCB*QC*4	1042*CLP90	COPPER,TOTAL	UG/L	ND
06/18/92	CCB*QC*4	1045*CLP90	IRON,TOTAL	UG/L	2.9
06/18/92	CCB*QC*4	82034*CLP90	POTASSIUM,TOTAL	UG/L	201
06/18/92	CCB*QC*4	927*CLP90	MAGNESIUM,TOTAL	UG/L	21.8
06/18/92	CCB*QC*4	1055*CLP90	MANGANESE,TOTAL	UG/L	0.1
06/18/92	CCB*QC*4	82035*CLP90	SODIUM,TOTAL	UG/L	20.8
06/18/92	CCB*QC*4	1067*CLP90	NICKEL,TOTAL	UG/L	ND
06/18/92	CCB*QC*4	1097*CLP90	ANTIMONY,TOTAL	UG/L	3.2
06/18/92	CCB*QC*4	1087*CLP90	VANADIUM,TOTAL	UG/L	ND
06/18/92	CCB*QC*4	1092*CLP90	ZINC,TOTAL	UG/L	ND

Initial Calibration Verification Sample Summary

DATE	SAMPLE	STORET	PARAMETER	UNITS	TARGET	FOUND	%RECV	RECV CRIT
06/18/92	ICV*ICAP19*1	1077*CLP90	SILVER,TOTAL	UG/L		ND		90-110
06/18/92	ICV*ICAP19*1	1105*CLP90	ALUMINUM,TOTAL	UG/L		ND		90-110
06/18/92	ICV*ICAP19*1	1007*CLP90	BARIUM,TOTAL	UG/L		ND		90-110
06/18/92	ICV*ICAP19*1	1012*CLP90	BERYLLIUM, TOTAL	UG/L	1000	998	99.8	90-110
06/18/92	ICV*ICAP19*1	82032*CLP90	CALCIUM,TOTAL	UG/L	1000	1050	105	90-110
06/18/92	ICV*ICAP19*1	1027*CLP90	CADMIUM,TOTAL	UG/L	1000	997	99.7	90-110
06/18/92	ICV*ICAP19*1	1037*CLP90	COBALT,TOTAL	UG/L	1000	1000	100.0	90-110
06/18/92	ICV*ICAP19*1	1034*CLP90	CHROMIUM,TOTAL	UG/L	1000	1010	101	90-110
06/18/92	ICV*ICAP19*1	1042*CLP90	COPPER,TOTAL	UG/L	1000	1010	101	90-110
06/18/92	ICV*ICAP19*1	1045*CLP90	IRON,TOTAL	UG/L	1000	1030	103	90-110
06/18/92	ICV*ICAP19*1	82034*CLP90	POTASSIUM,TOTAL	UG/L		ND		90-110
06/18/92	ICV*ICAP19*1	927*CLP90	MAGNESIUM,TOTAL	UG/L	1000	1040	104	90-110
06/18/92	ICV*ICAP19*1	1055*CLP90	MANGANESE,TOTAL	UG/L	1000	1010	101	90-110
06/18/92	ICV*ICAP19*1	82035*CLP90	SODIUM,TOTAL	UG/L		ND		90-110
06/18/92	ICV*ICAP19*1	1067*CLP90	NICKEL,TOTAL	UG/L	1000	1020	102	90-110
06/18/92	ICV*ICAP19*1	1097*CLP90	ANTIMONY,TOTAL	UG/L	1000	976	97.6	90-110
06/18/92	ICV*ICAP19*1	1087*CLP90	VANADIUM,TOTAL	UG/L	1000	1010	101	90-110
06/18/92	ICV*ICAP19*1	1092*CLP90	ZINC,TOTAL	UG/L	1000	1010	101	90-110
06/18/92	ICV*ICAP7*1	1077*CLP90	SILVER,TOTAL	UG/L	1000	1010	101	90-110
06/18/92	ICV*ICAP7*1	1105*CLP90	ALUMINUM,TOTAL	UG/L	1000	1020	102	90-110
06/18/92	ICV*ICAP7*1	1007*CLP90	BARIUM,TOTAL	UG/L	1000	1020	102	90-110
06/18/92	ICV*ICAP7*1	1012*CLP90	BERYLLIUM, TOTAL	UG/L		ND		90-110
06/18/92	ICV*ICAP7*1	82032*CLP90	CALCIUM,TOTAL	UG/L		ND		90-110
06/18/92	ICV*ICAP7*1	1027*CLP90	CADMIUM,TOTAL	UG/L		ND		90-110
06/18/92	ICV*ICAP7*1	1037*CLP90	COBALT,TOTAL	UG/L		ND		90-110
06/18/92	ICV*ICAP7*1	1034*CLP90	CHROMIUM,TOTAL	UG/L		ND		90-110
06/18/92	ICV*ICAP7*1	1042*CLP90	COPPER,TOTAL	UG/L		ND		90-110
06/18/92	ICV*ICAP7*1	1045*CLP90	IRON,TOTAL	UG/L		ND		90-110
06/18/92	ICV*ICAP7*1	82034*CLP90	POTASSIUM,TOTAL	UG/L	10000	10200	102	90-110
06/18/92	ICV*ICAP7*1	927*CLP90	MAGNESIUM,TOTAL	UG/L		ND		90-110
06/18/92	ICV*ICAP7*1	1055*CLP90	MANGANESE,TOTAL	UG/L		ND		90-110
06/18/92	ICV*ICAP7*1	82035*CLP90	SODIUM,TOTAL	UG/L	1000	1030	103	90-110
06/18/92	ICV*ICAP7*1	1067*CLP90	NICKEL,TOTAL	UG/L		ND		90-110
06/18/92	ICV*ICAP7*1	1097*CLP90	ANTIMONY,TOTAL	UG/L		ND		90-110
06/18/92	ICV*ICAP7*1	1087*CLP90	VANADIUM,TOTAL	UG/L		ND		90-110
06/18/92	ICV*ICAP7*1	1092*CLP90	ZINC,TOTAL	UG/L		ND		90-110

Continuing Calibration Verification Sample Summary

DATE	SAMPLE	STORET	PARAMETER	UNITS	TARGET	FOUND	%RECV	RECV CRIT
06/18/92	CCV*QC*1	1077*CLP90	SILVER,TOTAL	UG/L	500	507	101	90-110
06/18/92	CCV*QC*1	1105*CLP90	ALUMINUM,TOTAL	UG/L	5000	5160	103	90-110
06/18/92	CCV*QC*1	1007*CLP90	BARIUM,TOTAL	UG/L	500	511	102	90-110
06/18/92	CCV*QC*1	1012*CLP90	BERYLLIUM, TOTAL	UG/L	500	517	103	90-110
06/18/92	CCV*QC*1	82032*CLP90	CALCIUM,TOTAL	UG/L	5000	5210	104	90-110
06/18/92	CCV*QC*1	1027*CLP90	CADMIUM,TOTAL	UG/L	500	501	100	90-110
06/18/92	CCV*QC*1	1037*CLP90	COBALT,TOTAL	UG/L	500	505	101	90-110
06/18/92	CCV*QC*1	1034*CLP90	CHROMIUM,TOTAL	UG/L	500	507	101	90-110
06/18/92	CCV*QC*1	1042*CLP90	COPPER,TOTAL	UG/L	500	509	102	90-110
06/18/92	CCV*QC*1	1045*CLP90	IRON,TOTAL	UG/L	5000	5210	104	90-110
06/18/92	CCV*QC*1	82034*CLP90	POTASSIUM,TOTAL	UG/L	5000	5120	102	90-110
06/18/92	CCV*QC*1	927*CLP90	MAGNESIUM,TOTAL	UG/L	5000	5130	103	90-110
06/18/92	CCV*QC*1	1055*CLP90	MANGANESE,TOTAL	UG/L	500	506	101	90-110
06/18/92	CCV*QC*1	82035*CLP90	SODIUM,TOTAL	UG/L	5000	5100	102	90-110
06/18/92	CCV*QC*1	1067*CLP90	NICKEL,TOTAL	UG/L	500	510	102	90-110
06/18/92	CCV*QC*1	1097*CLP90	ANTIMONY,TOTAL	UG/L	500	494	98.3	90-110

ESE BATCH : G28839

Continuing Calibration Verification Sample Summary

DATE	SAMPLE	STORET	PARAMETER	UNITS	TARGET	FOUND	%RECV	RECV CRIT
06/18/92	CCV*QC*1	1087*CLP90	VANADIUM,TOTAL	UG/L	500	509	102	90-110
06/18/92	CCV*QC*1	1092*CLP90	ZINC,TOTAL	UG/L	500	501	100	90-110
06/18/92	CCV*QC*2	1077*CLP90	SILVER,TOTAL	UG/L	500	497	99.4	90-110
06/18/92	CCV*QC*2	1105*CLP90	ALUMINUM,TOTAL	UG/L	5000	5110	102	90-110
06/18/92	CCV*QC*2	1007*CLP90	BARIUM,TOTAL	UG/L	500	499	99.8	90-110
06/18/92	CCV*QC*2	1012*CLP90	BERYLLIUM, TOTAL	UG/L	500	510	102	90-110
06/18/92	CCV*QC*2	82032*CLP90	CALCIUM,TOTAL	UG/L	5000	5120	102	90-110
06/18/92	CCV*QC*2	1027*CLP90	CADMIUM,TOTAL	UG/L	500	493	98.6	90-110
06/18/92	CCV*QC*2	1037*CLP90	COBALT,TOTAL	UG/L	500	488	97.6	90-110
06/18/92	CCV*QC*2	1034*CLP90	CHROMIUM,TOTAL	UG/L	500	498	99.6	90-110
06/18/92	CCV*QC*2	1042*CLP90	COPPER,TOTAL	UG/L	500	498	99.6	90-110
06/18/92	CCV*QC*2	1045*CLP90	IRON,TOTAL	UG/L	5000	5090	102	90-110
06/18/92	CCV*QC*2	82034*CLP90	POTASSIUM,TOTAL	UG/L	5000	5120	102	90-110
06/18/92	CCV*QC*2	927*CLP90	MAGNESIUM,TOTAL	UG/L	5000	5120	102	90-110
06/18/92	CCV*QC*2	1055*CLP90	MANGANESE,TOTAL	UG/L	500	497	99.4	90-110
06/18/92	CCV*QC*2	82035*CLP90	SODIUM,TOTAL	UG/L	5000	5050	101	90-110
06/18/92	CCV*QC*2	1067*CLP90	NICKEL,TOTAL	UG/L	500	497	99.4	90-110
06/18/92	CCV*QC*2	1097*CLP90	ANTIMONY,TOTAL	UG/L	500	477	95.4	90-110
06/18/92	CCV*QC*2	1087*CLP90	VANADIUM,TOTAL	UG/L	500	501	100	90-110
06/18/92	CCV*QC*2	1092*CLP90	ZINC,TOTAL	UG/L	500	495	99.0	90-110
06/18/92	CCV*QC*3	1077*CLP90	SILVER,TOTAL	UG/L	500	507	101	90-110
06/18/92	CCV*QC*3	1105*CLP90	ALUMINUM,TOTAL	UG/L	5000	5120	102	90-110
06/18/92	CCV*QC*3	1007*CLP90	BARIUM,TOTAL	UG/L	500	501	100	90-110
06/18/92	CCV*QC*3	1012*CLP90	BERYLLIUM, TOTAL	UG/L	500	517	103	90-110
06/18/92	CCV*QC*3	82032*CLP90	CALCIUM,TOTAL	UG/L	5000	5170	103	90-110
06/18/92	CCV*QC*3	1027*CLP90	CADMIUM,TOTAL	UG/L	500	505	101	90-110
06/18/92	CCV*QC*3	1037*CLP90	COBALT,TOTAL	UG/L	500	498	99.6	90-110
06/18/92	CCV*QC*3	1034*CLP90	CHROMIUM,TOTAL	UG/L	500	504	101	90-110
06/18/92	CCV*QC*3	1042*CLP90	COPPER,TOTAL	UG/L	500	501	100	90-110
06/18/92	CCV*QC*3	1045*CLP90	IRON,TOTAL	UG/L	5000	5110	102	90-110
06/18/92	CCV*QC*3	82034*CLP90	POTASSIUM,TOTAL	UG/L	5000	5420	108	90-110
06/18/92	CCV*QC*3	927*CLP90	MAGNESIUM,TOTAL	UG/L	5000	5100	102	90-110
06/18/92	CCV*QC*3	1055*CLP90	MANGANESE,TOTAL	UG/L	500	501	100	90-110
06/18/92	CCV*QC*3	82035*CLP90	SODIUM,TOTAL	UG/L	5000	5110	102	90-110
06/18/92	CCV*QC*3	1067*CLP90	NICKEL,TOTAL	UG/L	500	498	99.6	90-110
06/18/92	CCV*QC*3	1097*CLP90	ANTIMONY,TOTAL	UG/L	500	500	100.0	90-110
06/18/92	CCV*QC*3	1087*CLP90	VANADIUM,TOTAL	UG/L	500	508	102	90-110
06/18/92	CCV*QC*3	1092*CLP90	ZINC,TOTAL	UG/L	500	503	101	90-110
06/18/92	CCV*QC*4	1077*CLP90	SILVER,TOTAL	UG/L	500	508	102	90-110
06/18/92	CCV*QC*4	1105*CLP90	ALUMINUM,TOTAL	UG/L	5000	5090	102	90-110
06/18/92	CCV*QC*4	1007*CLP90	BARIUM,TOTAL	UG/L	500	501	100	90-110
06/18/92	CCV*QC*4	1012*CLP90	BERYLLIUM, TOTAL	UG/L	500	517	103	90-110
06/18/92	CCV*QC*4	82032*CLP90	CALCIUM,TOTAL	UG/L	5000	5130	103	90-110
06/18/92	CCV*QC*4	1027*CLP90	CADMIUM,TOTAL	UG/L	500	502	100	90-110
06/18/92	CCV*QC*4	1037*CLP90	COBALT,TOTAL	UG/L	500	494	98.8	90-110
06/18/92	CCV*QC*4	1034*CLP90	CHROMIUM,TOTAL	UG/L	500	497	99.4	90-110
06/18/92	CCV*QC*4	1042*CLP90	COPPER,TOTAL	UG/L	500	497	99.4	90-110
06/18/92	CCV*QC*4	1045*CLP90	IRON,TOTAL	UG/L	5000	5100	102	90-110
06/18/92	CCV*QC*4	82034*CLP90	POTASSIUM,TOTAL	UG/L	5000	5210	104	90-110
06/18/92	CCV*QC*4	927*CLP90	MAGNESIUM,TOTAL	UG/L	5000	5060	101	90-110
06/18/92	CCV*QC*4	1055*CLP90	MANGANESE,TOTAL	UG/L	500	498	99.6	90-110
06/18/92	CCV*QC*4	82035*CLP90	SODIUM,TOTAL	UG/L	5000	5070	101	90-110
06/18/92	CCV*QC*4	1067*CLP90	NICKEL,TOTAL	UG/L	500	496	99.2	90-110
06/18/92	CCV*QC*4	1097*CLP90	ANTIMONY,TOTAL	UG/L	500	497	99.4	90-110
06/18/92	CCV*QC*4	1087*CLP90	VANADIUM,TOTAL	UG/L	500	504	101	90-110
06/18/92	CCV*QC*4	1092*CLP90	ZINC,TOTAL	UG/L	500	500	100.0	90-110
06/18/92	CCV*QC*5	1077*CLP90	SILVER,TOTAL	UG/L	500	506	101	90-110
06/18/92	CCV*QC*5	1105*CLP90	ALUMINUM,TOTAL	UG/L	5000	5100	102	90-110
06/18/92	CCV*QC*5	1007*CLP90	BARIUM,TOTAL	UG/L	500	495	99.0	90-110
06/18/92	CCV*QC*5	1012*CLP90	BERYLLIUM, TOTAL	UG/L	500	516	103	90-110
06/18/92	CCV*QC*5	82032*CLP90	CALCIUM,TOTAL	UG/L	5000	5100	102	90-110
06/18/92	CCV*QC*5	1027*CLP90	CADMIUM,TOTAL	UG/L	500	501	100	90-110
06/18/92	CCV*QC*5	1037*CLP90	COBALT,TOTAL	UG/L	500	495	99.0	90-110
06/18/92	CCV*QC*5	1034*CLP90	CHROMIUM,TOTAL	UG/L	500	500	100.0	90-110
06/18/92	CCV*QC*5	1042*CLP90	COPPER,TOTAL	UG/L	500	495	99.0	90-110
06/18/92	CCV*QC*5	1045*CLP90	IRON,TOTAL	UG/L	5000	5060	101	90-110
06/18/92	CCV*QC*5	82034*CLP90	POTASSIUM,TOTAL	UG/L	5000	5340	107	90-110
06/18/92	CCV*QC*5	927*CLP90	MAGNESIUM,TOTAL	UG/L	5000	5080	102	90-110
06/18/92	CCV*QC*5	1055*CLP90	MANGANESE,TOTAL	UG/L	500	495	99.0	90-110
06/18/92	CCV*QC*5	82035*CLP90	SODIUM,TOTAL	UG/L	5000	5080	102	90-110
06/18/92	CCV*QC*5	1067*CLP90	NICKEL,TOTAL	UG/L	500	490	98.0	90-110
06/18/92	CCV*QC*5	1097*CLP90	ANTIMONY,TOTAL	UG/L	500	493	98.6	90-110
06/18/92	CCV*QC*5	1087*CLP90	VANADIUM,TOTAL	UG/L	500	502	100	90-110
06/18/92	CCV*QC*5	1092*CLP90	ZINC,TOTAL	UG/L	500	499	99.8	90-110

ESE BATCH : G28839

Laboratory Control Sample Summary

DATE	SAMPLE	STORET	PARAMETER	%RECV	RECV CRIT	UNITS	TARGET	FOUND

Laboratory Control Sample Summary

DATE	SAMPLE	STORET	PARAMETER	%RECV	RECV CRIT	UNITS	TARGET	FOUND
06/18/92	LCS*QC*1	1077*CLP90	SILVER,TOTAL	98.8	80-120	UG/L	50.0	49.4
06/18/92	LCS*QC*1	1105*CLP90	ALUMINUM,TOTAL	100.0	80-120	UG/L	2000	2000
06/18/92	LCS*QC*1	1007*CLP90	BARIUM,TOTAL	97.5	80-120	UG/L	2000	1950
06/18/92	LCS*QC*1	1012*CLP90	BERYLLIUM, TOTAL	88.6	80-120	UG/L	50.0	44.3
06/18/92	LCS*QC*1	82032*CLP90	CALCIUM,TOTAL	98.1	80-120	UG/L	10000	9810
06/18/92	LCS*QC*1	1027*CLP90	CADMIUM,TOTAL	91.4	80-120	UG/L	50.0	45.7
06/18/92	LCS*QC*1	1037*CLP90	COBALT,TOTAL	95.0	80-120	UG/L	500	475
06/18/92	LCS*QC*1	1034*CLP90	CHROMIUM,TOTAL	96.0	80-120	UG/L	200	192
06/18/92	LCS*QC*1	1042*CLP90	COPPER,TOTAL	96.0	80-120	UG/L	250	240
06/18/92	LCS*QC*1	1045*CLP90	IRON,TOTAL	99.9	80-120	UG/L	1000	999
06/18/92	LCS*QC*1	82034*CLP90	POTASSIUM,TOTAL	98.9	80-120	UG/L	10000	9890
06/18/92	LCS*QC*1	927*CLP90	MAGNESIUM,TOTAL	98.3	80-120	UG/L	10000	9830
06/18/92	LCS*QC*1	1055*CLP90	MANGANESE,TOTAL	96.0	80-120	UG/L	500	480
06/18/92	LCS*QC*1	82035*CLP90	SODIUM,TOTAL	98.2	80-120	UG/L	10000	9820
06/18/92	LCS*QC*1	1067*CLP90	NICKEL,TOTAL	95.4	80-120	UG/L	500	477
06/18/92	LCS*QC*1	1097*CLP90	ANTIMONY,TOTAL	93.0	80-120	UG/L	500	465
06/18/92	LCS*QC*1	1087*CLP90	VANADIUM,TOTAL	97.4	80-120	UG/L	500	487
06/18/92	LCS*QC*1	1092*CLP90	ZINC,TOTAL	96.2	80-120	UG/L	500	481

Interference Check Sample Summary

DATE	SAMPLE	STORET	PARAMETER	UNITS	TARGET	FOUND	%RECV	RECV CRIT
06/18/92	ICS*A*1	1077*CLP90	SILVER,TOTAL	UG/L		ND		80-120
06/18/92	ICS*A*1	1105*CLP90	ALUMINUM,TOTAL	UG/L	500000	505000	101	80-120
06/18/92	ICS*A*1	1007*CLP90	BARIUM,TOTAL	UG/L		ND		80-120
06/18/92	ICS*A*1	1012*CLP90	BERYLLIUM, TOTAL	UG/L		ND		80-120
06/18/92	ICS*A*1	82032*CLP90	CALCIUM,TOTAL	UG/L	500000	481000	96.2	80-120
06/18/92	ICS*A*1	1027*CLP90	CADMIUM,TOTAL	UG/L		ND		80-120
06/18/92	ICS*A*1	1037*CLP90	COBALT,TOTAL	UG/L		ND		80-120
06/18/92	ICS*A*1	1034*CLP90	CHROMIUM,TOTAL	UG/L		ND		80-120
06/18/92	ICS*A*1	1042*CLP90	COPPER,TOTAL	UG/L		ND		80-120
06/18/92	ICS*A*1	1045*CLP90	IRON,TOTAL	UG/L	200000	181000	90.5	80-120
06/18/92	ICS*A*1	82034*CLP90	POTASSIUM,TOTAL	UG/L		ND		80-120
06/18/92	ICS*A*1	927*CLP90	MAGNESIUM,TOTAL	UG/L	500000	490000	98.0	80-120
06/18/92	ICS*A*1	1055*CLP90	MANGANESE,TOTAL	UG/L		ND		80-120
06/18/92	ICS*A*1	82035*CLP90	SODIUM,TOTAL	UG/L		ND		80-120
06/18/92	ICS*A*1	1067*CLP90	NICKEL,TOTAL	UG/L		ND		80-120
06/18/92	ICS*A*1	1097*CLP90	ANTIMONY,TOTAL	UG/L		ND		80-120
06/18/92	ICS*A*1	1087*CLP90	VANADIUM,TOTAL	UG/L		ND		80-120
06/18/92	ICS*A*1	1092*CLP90	ZINC,TOTAL	UG/L		ND		80-120
06/18/92	ICS*AB*1	1077*CLP90	SILVER,TOTAL	UG/L	1000	959	95.9	80-120
06/18/92	ICS*AB*1	1105*CLP90	ALUMINUM,TOTAL	UG/L	500000	502000	100	80-120
06/18/92	ICS*AB*1	1007*CLP90	BARIUM,TOTAL	UG/L	500	476	95.2	80-120
06/18/92	ICS*AB*1	1012*CLP90	BERYLLIUM, TOTAL	UG/L	500	496	99.2	80-120
06/18/92	ICS*AB*1	82032*CLP90	CALCIUM,TOTAL	UG/L	500000	476000	95.2	80-120
06/18/92	ICS*AB*1	1027*CLP90	CADMIUM,TOTAL	UG/L	1000	952	95.2	80-120
06/18/92	ICS*AB*1	1037*CLP90	COBALT,TOTAL	UG/L	500	440	88.0	80-120
06/18/92	ICS*AB*1	1034*CLP90	CHROMIUM,TOTAL	UG/L	500	448	89.6	80-120
06/18/92	ICS*AB*1	1042*CLP90	COPPER,TOTAL	UG/L	500	482	96.4	80-120
06/18/92	ICS*AB*1	1045*CLP90	IRON,TOTAL	UG/L	200000	179000	89.5	80-120
06/18/92	ICS*AB*1	82034*CLP90	POTASSIUM,TOTAL	UG/L		ND		80-120
06/18/92	ICS*AB*1	927*CLP90	MAGNESIUM,TOTAL	UG/L	500000	489000	97.8	80-120
06/18/92	ICS*AB*1	1055*CLP90	MANGANESE,TOTAL	UG/L	500	441	88.2	80-120
06/18/92	ICS*AB*1	82035*CLP90	SODIUM,TOTAL	UG/L	500	496	99.2	80-120
06/18/92	ICS*AB*1	1067*CLP90	NICKEL,TOTAL	UG/L	1000	892	89.2	80-120
06/18/92	ICS*AB*1	1097*CLP90	ANTIMONY,TOTAL	UG/L		ND		80-120
06/18/92	ICS*AB*1	1087*CLP90	VANADIUM,TOTAL	UG/L	500	469	93.8	80-120
06/18/92	ICS*AB*1	1092*CLP90	ZINC,TOTAL	UG/L	1000	929	92.9	80-120
06/18/92	ICS*A*2	1077*CLP90	SILVER,TOTAL	UG/L		ND		80-120
06/18/92	ICS*A*2	1105*CLP90	ALUMINUM,TOTAL	UG/L	500000	500000	100.0	80-120
06/18/92	ICS*A*2	1007*CLP90	BARIUM,TOTAL	UG/L		ND		80-120
06/18/92	ICS*A*2	1012*CLP90	BERYLLIUM, TOTAL	UG/L		ND		80-120
06/18/92	ICS*A*2	82032*CLP90	CALCIUM,TOTAL	UG/L	500000	475000	95.0	80-120
06/18/92	ICS*A*2	1027*CLP90	CADMIUM,TOTAL	UG/L		ND		80-120
06/18/92	ICS*A*2	1037*CLP90	COBALT,TOTAL	UG/L		ND		80-120
06/18/92	ICS*A*2	1034*CLP90	CHROMIUM,TOTAL	UG/L		ND		80-120
06/18/92	ICS*A*2	1042*CLP90	COPPER,TOTAL	UG/L		ND		80-120
06/18/92	ICS*A*2	1045*CLP90	IRON,TOTAL	UG/L	200000	179000	89.5	80-120
06/18/92	ICS*A*2	82034*CLP90	POTASSIUM,TOTAL	UG/L		ND		80-120
06/18/92	ICS*A*2	927*CLP90	MAGNESIUM,TOTAL	UG/L	500000	484000	96.8	80-120
06/18/92	ICS*A*2	1055*CLP90	MANGANESE,TOTAL	UG/L		ND		80-120
06/18/92	ICS*A*2	82035*CLP90	SODIUM,TOTAL	UG/L		ND		80-120
06/18/92	ICS*A*2	1067*CLP90	NICKEL,TOTAL	UG/L		ND		80-120

ESE BATCH : G28839

Interference Check Sample Summary

DATE	SAMPLE	STORET	PARAMETER	UNITS	TARGET	FOUND	%RECV	RECV CRIT
06/18/92	ICS*A*2	1097*CLP90	ANTIMONY,TOTAL	UG/L		ND		80-120
06/18/92	ICS*A*2	1087*CLP90	VANADIUM,TOTAL	UG/L		ND		80-120
06/18/92	ICS*A*2	1092*CLP90	ZINC,TOTAL	UG/L		ND		80-120
06/18/92	ICS*AB*2	1077*CLP90	SILVER,TOTAL	UG/L	1000	962	96.2	80-120
06/18/92	ICS*AB*2	1105*CLP90	ALUMINUM,TOTAL	UG/L	500000	501000	100	80-120
06/18/92	ICS*AB*2	1007*CLP90	BARIUM,TOTAL	UG/L	500	479	95.8	80-120
06/18/92	ICS*AB*2	1012*CLP90	BERYLLIUM, TOTAL	UG/L	500	499	99.8	80-120
06/18/92	ICS*AB*2	82032*CLP90	CALCIUM,TOTAL	UG/L	500000	475000	95.0	80-120
06/18/92	ICS*AB*2	1027*CLP90	CADMIUM,TOTAL	UG/L	1000	954	95.4	80-120
06/18/92	ICS*AB*2	1037*CLP90	COBALT,TOTAL	UG/L	500	443	88.6	80-120
06/18/92	ICS*AB*2	1034*CLP90	CHROMIUM,TOTAL	UG/L	500	448	89.6	80-120
06/18/92	ICS*AB*2	1042*CLP90	COPPER,TOTAL	UG/L	500	482	96.4	80-120
06/18/92	ICS*AB*2	1045*CLP90	IRON,TOTAL	UG/L	200000	178000	89.0	80-120
06/18/92	ICS*AB*2	82034*CLP90	POTASSIUM,TOTAL	UG/L		ND		80-120
06/18/92	ICS*AB*2	927*CLP90	MAGNESIUM,TOTAL	UG/L	500000	486000	97.2	80-120
06/18/92	ICS*AB*2	1055*CLP90	MANGANESE,TOTAL	UG/L	500	438	87.6	80-120
06/18/92	ICS*AB*2	82035*CLP90	SODIUM,TOTAL	UG/L	500	515	103	80-120
06/18/92	ICS*AB*2	1067*CLP90	NICKEL,TOTAL	UG/L	1000	889	88.9	80-120
06/18/92	ICS*AB*2	1097*CLP90	ANTIMONY,TOTAL	UG/L		ND		80-120
06/18/92	ICS*AB*2	1087*CLP90	VANADIUM,TOTAL	UG/L	500	471	94.2	80-120
06/18/92	ICS*AB*2	1092*CLP90	ZINC,TOTAL	UG/L	1000	931	93.1	80-120

Method Blank Sample Summary

DATE	SAMPLE	STORET	PARAMETER	UNITS	FOUND
06/18/92	MB*QC*1	1077*CLP90	SILVER,TOTAL	UG/L	ND
06/18/92	MB*QC*1	1105*CLP90	ALUMINUM,TOTAL	UG/L	ND
06/18/92	MB*QC*1	1007*CLP90	BARIUM,TOTAL	UG/L	ND
06/18/92	MB*QC*1	1012*CLP90	BERYLLIUM, TOTAL	UG/L	ND
06/18/92	MB*QC*1	82032*CLP90	CALCIUM,TOTAL	UG/L	ND
06/18/92	MB*QC*1	1027*CLP90	CADMIUM,TOTAL	UG/L	ND
06/18/92	MB*QC*1	1037*CLP90	COBALT,TOTAL	UG/L	ND
06/18/92	MB*QC*1	1034*CLP90	CHROMIUM,TOTAL	UG/L	ND
06/18/92	MB*QC*1	1042*CLP90	COPPER,TOTAL	UG/L	ND
06/18/92	MB*QC*1	1045*CLP90	IRON,TOTAL	UG/L	ND
06/18/92	MB*QC*1	82034*CLP90	POTASSIUM,TOTAL	UG/L	ND
06/18/92	MB*QC*1	927*CLP90	MAGNESIUM,TOTAL	UG/L	ND
06/18/92	MB*QC*1	1055*CLP90	MANGANESE,TOTAL	UG/L	1.4
06/18/92	MB*QC*1	82035*CLP90	SODIUM,TOTAL	UG/L	ND
06/18/92	MB*QC*1	1067*CLP90	NICKEL,TOTAL	UG/L	ND
06/18/92	MB*QC*1	1097*CLP90	ANTIMONY,TOTAL	UG/L	ND
06/18/92	MB*QC*1	1087*CLP90	VANADIUM,TOTAL	UG/L	ND
06/18/92	MB*QC*1	1092*CLP90	ZINC,TOTAL	UG/L	ND

Sample Matrix Spike Recovery Summary

DATE	SAMPLE	STORET	PARAMETER	%RECV	RECV CRIT	UNSPIKED	UNITS	TARGET	FOUND	RPD
06/18/92	SPM*ALW2B*26	1077*CLP90	SILVER,TOTAL	87.8	75-125	0.0	UG/L	50.0	43.9	
06/18/92	SPM*ALW2B*26	1105*CLP90	ALUMINUM,TOTAL	98.0	75-125	12.8	UG/L	2000	1960	
06/18/92	SPM*ALW2B*26	1007*CLP90	BARIUM,TOTAL	95.5	75-125	70.3	UG/L	2000	1910	
06/18/92	SPM*ALW2B*26	1012*CLP90	BERYLLIUM, TOTAL	90.8	75-125	2.3	UG/L	50.0	45.4	
06/18/92	SPM*ALW2B*26	82032*CLP90	CALCIUM,TOTAL	88.0	80-120	43800	UG/L	10000	8800	
06/18/92	SPM*ALW2B*26	1027*CLP90	CADMIUM,TOTAL	89.0	75-125	1.2	UG/L	50.0	44.5	
06/18/92	SPM*ALW2B*26	1037*CLP90	COBALT,TOTAL	91.2	75-125	0.8	UG/L	500	456	
06/18/92	SPM*ALW2B*26	1034*CLP90	CHROMIUM,TOTAL	92.5	75-125	0.0	UG/L	200	185	
06/18/92	SPM*ALW2B*26	1042*CLP90	COPPER,TOTAL	95.6	75-125	2.1	UG/L	250	239	
06/18/92	SPM*ALW2B*26	1045*CLP90	IRON,TOTAL	94.9	75-125	8.0	UG/L	1000	949	
06/18/92	SPM*ALW2B*26	82034*CLP90	POTASSIUM,TOTAL	94.0	80-120	22900	UG/L	10000	9400	
06/18/92	SPM*ALW2B*26	927*CLP90	MAGNESIUM,TOTAL	90.0	80-120	31300	UG/L	10000	9000	
06/18/92	SPM*ALW2B*26	1055*CLP90	MANGANESE,TOTAL	91.0	75-125	256	UG/L	500	455	
06/18/92	SPM*ALW2B*26	82035*CLP90	SODIUM,TOTAL	80.0	75-125	201000	UG/L	10000	8000	
06/18/92	SPM*ALW2B*26	1067*CLP90	NICKEL,TOTAL	92.2	75-125	39.1	UG/L	500	461	
06/18/92	SPM*ALW2B*26	1097*CLP90	ANTIMONY,TOTAL	90.4	75-125	0.0	UG/L	500	452	
06/18/92	SPM*ALW2B*26	1087*CLP90	VANADIUM,TOTAL	94.2	75-125	6.2	UG/L	500	471	
06/18/92	SPM*ALW2B*26	1092*CLP90	ZINC,TOTAL	92.4	75-125	3.9	UG/L	500	462	

Replicate Analysis Sample Summary

DATE	SAMPLE	STORET	PARAMETER	UNITS	REP #1	REP #2	RPD	RPD CRIT
06/18/92	RP*ALW2B*26	1077*CLP90	SILVER,TOTAL	UG/L	<4.8	<4.8	0.0	20
06/18/92	RP*ALW2B*26	1105*CLP90	ALUMINUM,TOTAL	UG/L	<40.7	<40.7	0.0	20
06/18/92	RP*ALW2B*26	1007*CLP90	BARIUM,TOTAL	UG/L	70.3	71.1	1.1	20
06/18/92	RP*ALW2B*26	1012*CLP90	BERYLLIUM, TOTAL	UG/L	<2.5	<2.5	0.0	20
06/18/92	RP*ALW2B*26	82032*CLP90	CALCIUM,TOTAL	UG/L	43800	44100	0.7	20
06/18/92	RP*ALW2B*26	1027*CLP90	CADMIUM,TOTAL	UG/L	<3.9	<3.9	0.0	20
06/18/92	RP*ALW2B*26	1037*CLP90	COBALT,TOTAL	UG/L	<17.2	<17.2	0.0	20
06/18/92	RP*ALW2B*26	1034*CLP90	CHROMIUM,TOTAL	UG/L	<6.3	<6.3	0.0	20

ESE BATCH : G28839

Replicate Analysis Sample Summary

DATE	SAMPLE	STORET	PARAMETER	UNITS	REP #1	REP #2	RPD	RPD CRIT
06/18/92	RP*ALW2B*26	1042*CLP90	COPPER,TOTAL	UG/L	<3.8	<3.8	0.0	20
06/18/92	RP*ALW2B*26	1045*CLP90	IRON,TOTAL	UG/L	8.0	10.4	26.1	20
06/18/92	RP*ALW2B*26	82034*CLP90	POTASSIUM,TOTAL	UG/L	22900	22900	0.0	20
06/18/92	RP*ALW2B*26	927*CLP90	MAGNESIUM,TOTAL	UG/L	31300	31200	0.3	20
06/18/92	RP*ALW2B*26	1055*CLP90	MANGANESE,TOTAL	UG/L	256	260	1.6	20
06/18/92	RP*ALW2B*26	82035*CLP90	SODIUM,TOTAL	UG/L	201000	201000	0.0	20
06/18/92	RP*ALW2B*26	1067*CLP90	NICKEL,TOTAL	UG/L	39.1	42.3	7.9	20
06/18/92	RP*ALW2B*26	1097*CLP90	ANTIMONY,TOTAL	UG/L	<37.5	<37.5	0.0	20
06/18/92	RP*ALW2B*26	1087*CLP90	VANADIUM,TOTAL	UG/L	6.2	<6.0	3.3	20
06/18/92	RP*ALW2B*26	1092*CLP90	ZINC,TOTAL	UG/L	<4.6	<4.6	0.0	20

Serial Dilution Sample Summary

DATE	SAMPLE	STORET	PARAMETER	UNITS	REP #1	REP #2	RPD	RPD CRIT
06/18/92	SD*ALW2B*26	1077*CLP90	SILVER,TOTAL	UG/L	0.0	2.1	NC	10
06/18/92	SD*ALW2B*26	1105*CLP90	ALUMINUM,TOTAL	UG/L	12.8	27.4	NC	10
06/18/92	SD*ALW2B*26	1007*CLP90	BARIUM,TOTAL	UG/L	70.3	64.5	8.6	10
06/18/92	SD*ALW2B*26	1012*CLP90	BERYLLIUM, TOTAL	UG/L	0.3	ND	NC	10
06/18/92	SD*ALW2B*26	82032*CLP90	CALCIUM,TOTAL	UG/L	43800	41200	6.1	10
06/18/92	SD*ALW2B*26	1027*CLP90	CADMIUM,TOTAL	UG/L	1.2	4.5	NC	10
06/18/92	SD*ALW2B*26	1037*CLP90	COBALT,TOTAL	UG/L	0.8	ND	NC	10
06/18/92	SD*ALW2B*26	1034*CLP90	CHROMIUM,TOTAL	UG/L	0.0	ND	NC	10
06/18/92	SD*ALW2B*26	1042*CLP90	COPPER,TOTAL	UG/L	0.1	ND	NC	10
06/18/92	SD*ALW2B*26	1045*CLP90	IRON,TOTAL	UG/L	8.0	8.2	NC	10
06/18/92	SD*ALW2B*26	82034*CLP90	POTASSIUM,TOTAL	UG/L	22900	21300	NC	10
06/18/92	SD*ALW2B*26	927*CLP90	MAGNESIUM,TOTAL	UG/L	31300	29100	7.3	10
06/18/92	SD*ALW2B*26	1055*CLP90	MANGANESE,TOTAL	UG/L	256	244	4.8	10
06/18/92	SD*ALW2B*26	82035*CLP90	SODIUM,TOTAL	UG/L	201000	185000	8.3	10
06/18/92	SD*ALW2B*26	1067*CLP90	NICKEL,TOTAL	UG/L	39.1	33.7	NC	10
06/18/92	SD*ALW2B*26	1097*CLP90	ANTIMONY,TOTAL	UG/L	0.0	ND	NC	10
06/18/92	SD*ALW2B*26	1087*CLP90	VANADIUM,TOTAL	UG/L	6.2	7.4	NC	10
06/18/92	SD*ALW2B*26	1092*CLP90	ZINC,TOTAL	UG/L	3.9	0.1	NC	10

ESE BATCH : G28839

Environmental Science and Engineering Analytical Services

Computer QC Checks

Batch No.: G28839 Analysis Date: 06/18/92 Analyst: JEFF MILLER

	Yes	"Exceptions" No	Comment / Corrective Action
Analysis holding time within criteria?	X		
Extract holding time within criteria?	X		
ICB present?	X		
ICB within acceptance criteria?	X		
CCB present?	X		
CCB within acceptance criteria?	X		
ICV present?	X		
ICV within acceptance criteria?	X		
CCV present?	X		
CCV within acceptance criteria?	X		
LCS present?	X		
LCS within acceptance criteria?	X		
ICS present?	X		
ICS within acceptance criteria?	X		
Method blank present?	X		
Method blank within acceptance criteria?	X		
Sample matrix spike present?	X		
Sample matrix spike within acceptance criteria?	X		
Sample replicate present?	X		
Sample replicate within acceptance criteria?		X	1045*CLP90 _____
SD present?	X		
SD within acceptance criteria?	X		

Note: Any "NO" answer requires a comment.

OVERRIDE COMMENTS

PROB.:REPLICATE OUTSIDE CRITERIA.
EXPL.:SAMPLE MATRIX INTERFERENCE./JMHE

ESE BATCH : G29073
CLASSIFICATION : TAL METALS - CLP SOW 3/90

STATUS : FINAL

METHOD BLANK CORRECTION METHOD : NONE

FIELD GRP	PROJECT NUMBER	PROJECT NAME	LAB COORDINATOR
ALW28	3914042 0201	JMM/ALAMEDA NASCTO-121	JACKIE HARGROVE-ELLI

SAMPLE CODE	CLIENT ID	DATE ANALYZED	TIME ANALYZED
ALW28*5	M-BG-DUP1	06/24/92	05:58PM

ESE BATCH : G29073

Initial Calibration Blank Summary

DATE	SAMPLE	STORET	PARAMETER	UNITS	FOUND
06/24/92	ICB*QC*1	1077*CLP90	SILVER,TOTAL	UG/L	0.8
06/24/92	ICB*QC*1	1105*CLP90	ALUMINUM,TOTAL	UG/L	7.3
06/24/92	ICB*QC*1	1007*CLP90	BARIUM,TOTAL	UG/L	0.3
06/24/92	ICB*QC*1	1012*CLP90	BERYLLIUM, TOTAL	UG/L	ND
06/24/92	ICB*QC*1	82032*CLP90	CALCIUM,TOTAL	UG/L	4.1
06/24/92	ICB*QC*1	1027*CLP90	CADMIUM,TOTAL	UG/L	ND
06/24/92	ICB*QC*1	1037*CLP90	COBALT,TOTAL	UG/L	0.9
06/24/92	ICB*QC*1	1034*CLP90	CHROMIUM,TOTAL	UG/L	0.3
06/24/92	ICB*QC*1	1042*CLP90	COPPER,TOTAL	UG/L	1.0
06/24/92	ICB*QC*1	1045*CLP90	IRON,TOTAL	UG/L	1.0
06/24/92	ICB*QC*1	82034*CLP90	POTASSIUM,TOTAL	UG/L	83.3
06/24/92	ICB*QC*1	927*CLP90	MAGNESIUM,TOTAL	UG/L	5.3
06/24/92	ICB*QC*1	1055*CLP90	MANGANESE,TOTAL	UG/L	0.2
06/24/92	ICB*QC*1	82035*CLP90	SODIUM,TOTAL	UG/L	9.2
06/24/92	ICB*QC*1	1067*CLP90	NICKEL,TOTAL	UG/L	ND
06/24/92	ICB*QC*1	1097*CLP90	ANTIMONY,TOTAL	UG/L	ND
06/24/92	ICB*QC*1	1087*CLP90	VANADIUM,TOTAL	UG/L	ND
06/24/92	ICB*QC*1	1092*CLP90	ZINC,TOTAL	UG/L	0.6

Continuing Calibration Blank Sample Summary

DATE	SAMPLE	STORET	PARAMETER	UNITS	FOUND
06/24/92	CCB*QC*1	1077*CLP90	SILVER,TOTAL	UG/L	ND
06/24/92	CCB*QC*1	1105*CLP90	ALUMINUM,TOTAL	UG/L	ND
06/24/92	CCB*QC*1	1007*CLP90	BARIUM,TOTAL	UG/L	ND
06/24/92	CCB*QC*1	1012*CLP90	BERYLLIUM, TOTAL	UG/L	1.1
06/24/92	CCB*QC*1	82032*CLP90	CALCIUM,TOTAL	UG/L	0.3
06/24/92	CCB*QC*1	1027*CLP90	CADMIUM,TOTAL	UG/L	0.7
06/24/92	CCB*QC*1	1037*CLP90	COBALT,TOTAL	UG/L	0.9
06/24/92	CCB*QC*1	1034*CLP90	CHROMIUM,TOTAL	UG/L	0.3
06/24/92	CCB*QC*1	1042*CLP90	COPPER,TOTAL	UG/L	1.2
06/24/92	CCB*QC*1	1045*CLP90	IRON,TOTAL	UG/L	3.5
06/24/92	CCB*QC*1	82034*CLP90	POTASSIUM,TOTAL	UG/L	ND
06/24/92	CCB*QC*1	927*CLP90	MAGNESIUM,TOTAL	UG/L	ND
06/24/92	CCB*QC*1	1055*CLP90	MANGANESE,TOTAL	UG/L	ND
06/24/92	CCB*QC*1	82035*CLP90	SODIUM,TOTAL	UG/L	ND
06/24/92	CCB*QC*1	1067*CLP90	NICKEL,TOTAL	UG/L	0.9
06/24/92	CCB*QC*1	1097*CLP90	ANTIMONY,TOTAL	UG/L	ND
06/24/92	CCB*QC*1	1087*CLP90	VANADIUM,TOTAL	UG/L	ND
06/24/92	CCB*QC*1	1092*CLP90	ZINC,TOTAL	UG/L	0.3

Initial Calibration Verification Sample Summary

DATE	SAMPLE	STORET	PARAMETER	UNITS	TARGET	FOUND	%RECV	RECV CRIT
06/24/92	ICV*ICAP19*1	1077*CLP90	SILVER,TOTAL	UG/L		ND		90-110
06/24/92	ICV*ICAP19*1	1105*CLP90	ALUMINUM,TOTAL	UG/L		ND		90-110
06/24/92	ICV*ICAP19*1	1007*CLP90	BARIUM,TOTAL	UG/L		ND		90-110
06/24/92	ICV*ICAP19*1	1012*CLP90	BERYLLIUM, TOTAL	UG/L	1000	1020	102	90-110
06/24/92	ICV*ICAP19*1	82032*CLP90	CALCIUM,TOTAL	UG/L	1000	1060	106	90-110
06/24/92	ICV*ICAP19*1	1027*CLP90	CADMIUM,TOTAL	UG/L	1000	1010	101	90-110
06/24/92	ICV*ICAP19*1	1037*CLP90	COBALT,TOTAL	UG/L	1000	1030	103	90-110
06/24/92	ICV*ICAP19*1	1034*CLP90	CHROMIUM,TOTAL	UG/L	1000	1030	103	90-110
06/24/92	ICV*ICAP19*1	1042*CLP90	COPPER,TOTAL	UG/L	1000	1030	103	90-110
06/24/92	ICV*ICAP19*1	1045*CLP90	IRON,TOTAL	UG/L	1000	1040	104	90-110
06/24/92	ICV*ICAP19*1	82034*CLP90	POTASSIUM,TOTAL	UG/L		ND		90-110
06/24/92	ICV*ICAP19*1	927*CLP90	MAGNESIUM,TOTAL	UG/L	1000	1030	103	90-110
06/24/92	ICV*ICAP19*1	1055*CLP90	MANGANESE,TOTAL	UG/L	1000	1040	104	90-110
06/24/92	ICV*ICAP19*1	82035*CLP90	SODIUM,TOTAL	UG/L		ND		90-110
06/24/92	ICV*ICAP19*1	1067*CLP90	NICKEL,TOTAL	UG/L	1000	1040	104	90-110
06/24/92	ICV*ICAP19*1	1097*CLP90	ANTIMONY,TOTAL	UG/L	1000	1010	101	90-110
06/24/92	ICV*ICAP19*1	1087*CLP90	VANADIUM,TOTAL	UG/L	1000	1030	103	90-110
06/24/92	ICV*ICAP19*1	1092*CLP90	ZINC,TOTAL	UG/L	1000	1030	103	90-110
06/24/92	ICV*ICAP7*1	1077*CLP90	SILVER,TOTAL	UG/L	1000	991	99.1	90-110
06/24/92	ICV*ICAP7*1	1105*CLP90	ALUMINUM,TOTAL	UG/L	1000	1000	100.0	90-110
06/24/92	ICV*ICAP7*1	1007*CLP90	BARIUM,TOTAL	UG/L	1000	1020	102	90-110
06/24/92	ICV*ICAP7*1	1012*CLP90	BERYLLIUM, TOTAL	UG/L		ND		90-110
06/24/92	ICV*ICAP7*1	82032*CLP90	CALCIUM,TOTAL	UG/L		ND		90-110
06/24/92	ICV*ICAP7*1	1027*CLP90	CADMIUM,TOTAL	UG/L		ND		90-110
06/24/92	ICV*ICAP7*1	1037*CLP90	COBALT,TOTAL	UG/L		ND		90-110
06/24/92	ICV*ICAP7*1	1034*CLP90	CHROMIUM,TOTAL	UG/L		ND		90-110
06/24/92	ICV*ICAP7*1	1042*CLP90	COPPER,TOTAL	UG/L		ND		90-110
06/24/92	ICV*ICAP7*1	1045*CLP90	IRON,TOTAL	UG/L		ND		90-110
06/24/92	ICV*ICAP7*1	82034*CLP90	POTASSIUM,TOTAL	UG/L	10000	10200	102	90-110
06/24/92	ICV*ICAP7*1	927*CLP90	MAGNESIUM,TOTAL	UG/L		ND		90-110
06/24/92	ICV*ICAP7*1	1055*CLP90	MANGANESE,TOTAL	UG/L		ND		90-110
06/24/92	ICV*ICAP7*1	82035*CLP90	SODIUM,TOTAL	UG/L	1000	1010	101	90-110
06/24/92	ICV*ICAP7*1	1067*CLP90	NICKEL,TOTAL	UG/L		ND		90-110

ESE BATCH : G29073

Initial Calibration Verification Sample Summary

DATE	SAMPLE	STORET	PARAMETER	UNITS	TARGET	FOUND	%RECV	RECV CRIT
06/24/92	ICV*ICAP7*1	1097*CLP90	ANTIMONY,TOTAL	UG/L		ND		90-110
06/24/92	ICV*ICAP7*1	1087*CLP90	VANADIUM,TOTAL	UG/L		ND		90-110
06/24/92	ICV*ICAP7*1	1092*CLP90	ZINC,TOTAL	UG/L		ND		90-110

Continuing Calibration Verification Sample Summary

DATE	SAMPLE	STORET	PARAMETER	UNITS	TARGET	FOUND	%RECV	RECV CRIT
06/24/92	CCV*QC*1	1077*CLP90	SILVER,TOTAL	UG/L	500	495	99.0	90-110
06/24/92	CCV*QC*1	1105*CLP90	ALUMINUM,TOTAL	UG/L	5000	5040	101	90-110
06/24/92	CCV*QC*1	1007*CLP90	BARIUM,TOTAL	UG/L	500	508	102	90-110
06/24/92	CCV*QC*1	1012*CLP90	BERYLLIUM, TOTAL	UG/L	500	516	103	90-110
06/24/92	CCV*QC*1	82032*CLP90	CALCIUM,TOTAL	UG/L	5000	5040	101	90-110
06/24/92	CCV*QC*1	1027*CLP90	CADMIUM,TOTAL	UG/L	500	503	101	90-110
06/24/92	CCV*QC*1	1037*CLP90	COBALT,TOTAL	UG/L	500	504	101	90-110
06/24/92	CCV*QC*1	1034*CLP90	CHROMIUM,TOTAL	UG/L	500	505	101	90-110
06/24/92	CCV*QC*1	1042*CLP90	COPPER,TOTAL	UG/L	500	508	102	90-110
06/24/92	CCV*QC*1	1045*CLP90	IRON,TOTAL	UG/L	5000	5060	101	90-110
06/24/92	CCV*QC*1	82034*CLP90	POTASSIUM,TOTAL	UG/L	5000	5240	105	90-110
06/24/92	CCV*QC*1	927*CLP90	MAGNESIUM,TOTAL	UG/L	5000	5060	101	90-110
06/24/92	CCV*QC*1	1055*CLP90	MANGANESE,TOTAL	UG/L	500	504	101	90-110
06/24/92	CCV*QC*1	82035*CLP90	SODIUM,TOTAL	UG/L	5000	5020	100	90-110
06/24/92	CCV*QC*1	1067*CLP90	NICKEL,TOTAL	UG/L	500	503	101	90-110
06/24/92	CCV*QC*1	1097*CLP90	ANTIMONY,TOTAL	UG/L	500	482	96.4	90-110
06/24/92	CCV*QC*1	1087*CLP90	VANADIUM,TOTAL	UG/L	500	513	103	90-110
06/24/92	CCV*QC*1	1092*CLP90	ZINC,TOTAL	UG/L	500	505	101	90-110
06/24/92	CCV*QC*2	1077*CLP90	SILVER,TOTAL	UG/L	500	495	99.0	90-110
06/24/92	CCV*QC*2	1105*CLP90	ALUMINUM,TOTAL	UG/L	5000	5240	105	90-110
06/24/92	CCV*QC*2	1007*CLP90	BARIUM,TOTAL	UG/L	500	515	103	90-110
06/24/92	CCV*QC*2	1012*CLP90	BERYLLIUM, TOTAL	UG/L	500	515	103	90-110
06/24/92	CCV*QC*2	82032*CLP90	CALCIUM,TOTAL	UG/L	5000	5280	106	90-110
06/24/92	CCV*QC*2	1027*CLP90	CADMIUM,TOTAL	UG/L	500	504	101	90-110
06/24/92	CCV*QC*2	1037*CLP90	COBALT,TOTAL	UG/L	500	508	102	90-110
06/24/92	CCV*QC*2	1034*CLP90	CHROMIUM,TOTAL	UG/L	500	507	101	90-110
06/24/92	CCV*QC*2	1042*CLP90	COPPER,TOTAL	UG/L	500	515	103	90-110
06/24/92	CCV*QC*2	1045*CLP90	IRON,TOTAL	UG/L	5000	5160	103	90-110
06/24/92	CCV*QC*2	82034*CLP90	POTASSIUM,TOTAL	UG/L	5000	4860	97.2	90-110
06/24/92	CCV*QC*2	927*CLP90	MAGNESIUM,TOTAL	UG/L	5000	5300	106	90-110
06/24/92	CCV*QC*2	1055*CLP90	MANGANESE,TOTAL	UG/L	500	507	101	90-110
06/24/92	CCV*QC*2	82035*CLP90	SODIUM,TOTAL	UG/L	5000	5080	102	90-110
06/24/92	CCV*QC*2	1067*CLP90	NICKEL,TOTAL	UG/L	500	510	102	90-110
06/24/92	CCV*QC*2	1097*CLP90	ANTIMONY,TOTAL	UG/L	500	480	96.0	90-110
06/24/92	CCV*QC*2	1087*CLP90	VANADIUM,TOTAL	UG/L	500	516	103	90-110
06/24/92	CCV*QC*2	1092*CLP90	ZINC,TOTAL	UG/L	500	507	101	90-110

Laboratory Control Sample Summary

DATE	SAMPLE	STORET	PARAMETER	%RECV	RECV CRIT	UNITS	TARGET	FOUND
06/24/92	LCS*QC*1	1077*CLP90	SILVER,TOTAL	93.8	80-120	UG/L	50.0	46.9
06/24/92	LCS*QC*1	1105*CLP90	ALUMINUM,TOTAL	100.0	80-120	UG/L	2000	2000
06/24/92	LCS*QC*1	1007*CLP90	BARIUM,TOTAL	101.5	80-120	UG/L	2000	2030
06/24/92	LCS*QC*1	1012*CLP90	BERYLLIUM, TOTAL	95.4	80-120	UG/L	50.0	47.7
06/24/92	LCS*QC*1	82032*CLP90	CALCIUM,TOTAL	100.0	80-120	UG/L	10000	10000
06/24/92	LCS*QC*1	1027*CLP90	CADMIUM,TOTAL	97.8	80-120	UG/L	50.0	48.9
06/24/92	LCS*QC*1	1037*CLP90	COBALT,TOTAL	99.8	80-120	UG/L	500	499
06/24/92	LCS*QC*1	1034*CLP90	CHROMIUM,TOTAL	99.5	80-120	UG/L	200	199
06/24/92	LCS*QC*1	1042*CLP90	COPPER,TOTAL	100.4	80-120	UG/L	250	251
06/24/92	LCS*QC*1	1045*CLP90	IRON,TOTAL	99.6	80-120	UG/L	1000	996
06/24/92	LCS*QC*1	82034*CLP90	POTASSIUM,TOTAL	96.8	80-120	UG/L	10000	9680
06/24/92	LCS*QC*1	927*CLP90	MAGNESIUM,TOTAL	99.5	80-120	UG/L	10000	9950
06/24/92	LCS*QC*1	1055*CLP90	MANGANESE,TOTAL	99.4	80-120	UG/L	500	497
06/24/92	LCS*QC*1	82035*CLP90	SODIUM,TOTAL	100.0	80-120	UG/L	10000	10000
06/24/92	LCS*QC*1	1067*CLP90	NICKEL,TOTAL	100.0	80-120	UG/L	500	500
06/24/92	LCS*QC*1	1097*CLP90	ANTIMONY,TOTAL	95.0	80-120	UG/L	500	475
06/24/92	LCS*QC*1	1087*CLP90	VANADIUM,TOTAL	101.8	80-120	UG/L	500	509
06/24/92	LCS*QC*1	1092*CLP90	ZINC,TOTAL	100.8	80-120	UG/L	500	504

Interference Check Sample Summary

DATE	SAMPLE	STORET	PARAMETER	UNITS	TARGET	FOUND	%RECV	RECV CRIT
06/24/92	ICS*A*1	1077*CLP90	SILVER,TOTAL	UG/L		ND		80-120
06/24/92	ICS*A*1	1105*CLP90	ALUMINUM,TOTAL	UG/L	500000	504000	101	80-120
06/24/92	ICS*A*1	1007*CLP90	BARIUM,TOTAL	UG/L		ND		80-120
06/24/92	ICS*A*1	1012*CLP90	BERYLLIUM, TOTAL	UG/L		ND		80-120
06/24/92	ICS*A*1	82032*CLP90	CALCIUM,TOTAL	UG/L	500000	484000	96.8	80-120
06/24/92	ICS*A*1	1027*CLP90	CADMIUM,TOTAL	UG/L		ND		80-120
06/24/92	ICS*A*1	1037*CLP90	COBALT,TOTAL	UG/L		ND		80-120
06/24/92	ICS*A*1	1034*CLP90	CHROMIUM,TOTAL	UG/L		ND		80-120

ESE BATCH : G29073

Interference Check Sample Summary

DATE	SAMPLE	STORET	PARAMETER	UNITS	TARGET	FOUND	%RECV	RECV CRIT
06/24/92	ICS*A*1	1042*CLP90	COPPER,TOTAL	UG/L		ND		80-120
06/24/92	ICS*A*1	1045*CLP90	IRON,TOTAL	UG/L	200000	181000	90.5	80-120
06/24/92	ICS*A*1	82034*CLP90	POTASSIUM,TOTAL	UG/L		ND		80-120
06/24/92	ICS*A*1	927*CLP90	MAGNESIUM,TOTAL	UG/L	500000	491000	98.2	80-120
06/24/92	ICS*A*1	1055*CLP90	MANGANESE,TOTAL	UG/L		ND		80-120
06/24/92	ICS*A*1	82035*CLP90	SODIUM,TOTAL	UG/L		ND		80-120
06/24/92	ICS*A*1	1067*CLP90	NICKEL,TOTAL	UG/L		ND		80-120
06/24/92	ICS*A*1	1097*CLP90	ANTIMONY,TOTAL	UG/L		ND		80-120
06/24/92	ICS*A*1	1087*CLP90	VANADIUM,TOTAL	UG/L		ND		80-120
06/24/92	ICS*A*1	1092*CLP90	ZINC,TOTAL	UG/L		ND		80-120
06/24/92	ICS*AB*1	1077*CLP90	SILVER,TOTAL	UG/L	1000	952	95.2	80-120
06/24/92	ICS*AB*1	1105*CLP90	ALUMINUM,TOTAL	UG/L	500000	501000	100	80-120
06/24/92	ICS*AB*1	1007*CLP90	BARIUM,TOTAL	UG/L	500	495	99.0	80-120
06/24/92	ICS*AB*1	1012*CLP90	BERYLLIUM, TOTAL	UG/L	500	499	99.8	80-120
06/24/92	ICS*AB*1	82032*CLP90	CALCIUM,TOTAL	UG/L	500000	484000	96.8	80-120
06/24/92	ICS*AB*1	1027*CLP90	CADMIUM,TOTAL	UG/L	1000	963	96.3	80-120
06/24/92	ICS*AB*1	1037*CLP90	COBALT,TOTAL	UG/L	500	461	92.2	80-120
06/24/92	ICS*AB*1	1034*CLP90	CHROMIUM,TOTAL	UG/L	500	462	92.4	80-120
06/24/92	ICS*AB*1	1042*CLP90	COPPER,TOTAL	UG/L	500	496	99.2	80-120
06/24/92	ICS*AB*1	1045*CLP90	IRON,TOTAL	UG/L	200000	181000	90.5	80-120
06/24/92	ICS*AB*1	82034*CLP90	POTASSIUM,TOTAL	UG/L		ND		80-120
06/24/92	ICS*AB*1	927*CLP90	MAGNESIUM,TOTAL	UG/L	500000	490000	98.0	80-120
06/24/92	ICS*AB*1	1055*CLP90	MANGANESE,TOTAL	UG/L	500	457	91.4	80-120
06/24/92	ICS*AB*1	82035*CLP90	SODIUM,TOTAL	UG/L		ND		80-120
06/24/92	ICS*AB*1	1067*CLP90	NICKEL,TOTAL	UG/L	1000	913	91.3	80-120
06/24/92	ICS*AB*1	1097*CLP90	ANTIMONY,TOTAL	UG/L		ND		80-120
06/24/92	ICS*AB*1	1087*CLP90	VANADIUM,TOTAL	UG/L	500	483	96.6	80-120
06/24/92	ICS*AB*1	1092*CLP90	ZINC,TOTAL	UG/L	1000	947	94.7	80-120
06/24/92	ICS*A*2	1077*CLP90	SILVER,TOTAL	UG/L		ND		80-120
06/24/92	ICS*A*2	1105*CLP90	ALUMINUM,TOTAL	UG/L	500000	505000	101	80-120
06/24/92	ICS*A*2	1007*CLP90	BARIUM,TOTAL	UG/L		ND		80-120
06/24/92	ICS*A*2	1012*CLP90	BERYLLIUM, TOTAL	UG/L		ND		80-120
06/24/92	ICS*A*2	82032*CLP90	CALCIUM,TOTAL	UG/L	500000	484000	96.8	80-120
06/24/92	ICS*A*2	1027*CLP90	CADMIUM,TOTAL	UG/L		ND		80-120
06/24/92	ICS*A*2	1037*CLP90	COBALT,TOTAL	UG/L		ND		80-120
06/24/92	ICS*A*2	1034*CLP90	CHROMIUM,TOTAL	UG/L		ND		80-120
06/24/92	ICS*A*2	1042*CLP90	COPPER,TOTAL	UG/L		ND		80-120
06/24/92	ICS*A*2	1045*CLP90	IRON,TOTAL	UG/L	200000	181000	90.5	80-120
06/24/92	ICS*A*2	82034*CLP90	POTASSIUM,TOTAL	UG/L		ND		80-120
06/24/92	ICS*A*2	927*CLP90	MAGNESIUM,TOTAL	UG/L	500000	496000	99.2	80-120
06/24/92	ICS*A*2	1055*CLP90	MANGANESE,TOTAL	UG/L		ND		80-120
06/24/92	ICS*A*2	82035*CLP90	SODIUM,TOTAL	UG/L		ND		80-120
06/24/92	ICS*A*2	1067*CLP90	NICKEL,TOTAL	UG/L		ND		80-120
06/24/92	ICS*A*2	1097*CLP90	ANTIMONY,TOTAL	UG/L		ND		80-120
06/24/92	ICS*A*2	1087*CLP90	VANADIUM,TOTAL	UG/L		ND		80-120
06/24/92	ICS*A*2	1092*CLP90	ZINC,TOTAL	UG/L		ND		80-120
06/24/92	ICS*AB*2	1077*CLP90	SILVER,TOTAL	UG/L	1000	949	94.9	80-120
06/24/92	ICS*AB*2	1105*CLP90	ALUMINUM,TOTAL	UG/L	500000	501000	100	80-120
06/24/92	ICS*AB*2	1007*CLP90	BARIUM,TOTAL	UG/L	500	490	98.0	80-120
06/24/92	ICS*AB*2	1012*CLP90	BERYLLIUM, TOTAL	UG/L	500	497	99.4	80-120
06/24/92	ICS*AB*2	82032*CLP90	CALCIUM,TOTAL	UG/L	500000	478000	95.6	80-120
06/24/92	ICS*AB*2	1027*CLP90	CADMIUM,TOTAL	UG/L	1000	960	96.0	80-120
06/24/92	ICS*AB*2	1037*CLP90	COBALT,TOTAL	UG/L	500	455	91.0	80-120
06/24/92	ICS*AB*2	1034*CLP90	CHROMIUM,TOTAL	UG/L	500	455	91.0	80-120
06/24/92	ICS*AB*2	1042*CLP90	COPPER,TOTAL	UG/L	500	494	98.8	80-120
06/24/92	ICS*AB*2	1045*CLP90	IRON,TOTAL	UG/L	200000	179000	89.5	80-120
06/24/92	ICS*AB*2	82034*CLP90	POTASSIUM,TOTAL	UG/L		ND		80-120
06/24/92	ICS*AB*2	927*CLP90	MAGNESIUM,TOTAL	UG/L	500000	492000	98.4	80-120
06/24/92	ICS*AB*2	1055*CLP90	MANGANESE,TOTAL	UG/L	500	452	90.4	80-120
06/24/92	ICS*AB*2	82035*CLP90	SODIUM,TOTAL	UG/L		ND		80-120
06/24/92	ICS*AB*2	1067*CLP90	NICKEL,TOTAL	UG/L	1000	913	91.3	80-120
06/24/92	ICS*AB*2	1097*CLP90	ANTIMONY,TOTAL	UG/L		ND		80-120
06/24/92	ICS*AB*2	1087*CLP90	VANADIUM,TOTAL	UG/L	500	476	95.2	80-120
06/24/92	ICS*AB*2	1092*CLP90	ZINC,TOTAL	UG/L	1000	938	93.8	80-120

Method Blank Sample Summary

DATE	SAMPLE	STORET	PARAMETER	UNITS	FOUND
06/24/92	MB*QC*1	1077*CLP90	SILVER,TOTAL	UG/L	ND
06/24/92	MB*QC*1	1105*CLP90	ALUMINUM,TOTAL	UG/L	ND
06/24/92	MB*QC*1	1007*CLP90	BARIUM,TOTAL	UG/L	ND
06/24/92	MB*QC*1	1012*CLP90	BERYLLIUM, TOTAL	UG/L	ND
06/24/92	MB*QC*1	82032*CLP90	CALCIUM,TOTAL	UG/L	56.2
06/24/92	MB*QC*1	1027*CLP90	CADMIUM,TOTAL	UG/L	ND
06/24/92	MB*QC*1	1037*CLP90	COBALT,TOTAL	UG/L	ND
06/24/92	MB*QC*1	1034*CLP90	CHROMIUM,TOTAL	UG/L	ND
06/24/92	MB*QC*1	1042*CLP90	COPPER,TOTAL	UG/L	ND

ESE BATCH : G29073

Method Blank Sample Summary

DATE	SAMPLE	STORET	PARAMETER	UNITS	FOUND
06/24/92	MB*QC*1	1045*CLP90	IRON,TOTAL	UG/L	13.8
06/24/92	MB*QC*1	82034*CLP90	POTASSIUM,TOTAL	UG/L	ND
06/24/92	MB*QC*1	927*CLP90	MAGNESIUM,TOTAL	UG/L	ND
06/24/92	MB*QC*1	1055*CLP90	MANGANESE,TOTAL	UG/L	ND
06/24/92	MB*QC*1	82035*CLP90	SODIUM,TOTAL	UG/L	ND
06/24/92	MB*QC*1	1067*CLP90	NICKEL,TOTAL	UG/L	ND
06/24/92	MB*QC*1	1097*CLP90	ANTIMONY,TOTAL	UG/L	ND
06/24/92	MB*QC*1	1087*CLP90	VANADIUM,TOTAL	UG/L	ND
06/24/92	MB*QC*1	1092*CLP90	ZINC,TOTAL	UG/L	ND

Sample Matrix Spike Recovery Summary

DATE	SAMPLE	STORET	PARAMETER	%RECV	RECV CRIT	UNSPIKED	UNITS	TARGET	FOUND	RPD
06/24/92	SPM*ALW2B*5	1077*CLP90	SILVER,TOTAL	86.2	75-125	0.0	UG/L	50.0	43.1	
06/24/92	SPM*ALW2B*5	1105*CLP90	ALUMINUM,TOTAL	98.5	75-125	10.5	UG/L	2000	1970	
06/24/92	SPM*ALW2B*5	1007*CLP90	BARIUM,TOTAL	101.0	75-125	81.9	UG/L	2000	2020	
06/24/92	SPM*ALW2B*5	1012*CLP90	BERYLLIUM, TOTAL	95.4	75-125	0.0	UG/L	50.0	47.7	
06/24/92	SPM*ALW2B*5	82032*CLP90	CALCIUM,TOTAL	97.0	80-120	48200	UG/L	10000	9700	
06/24/92	SPM*ALW2B*5	1027*CLP90	CADMIUM,TOTAL	97.6	75-125	0.3	UG/L	50.0	48.8	
06/24/92	SPM*ALW2B*5	1037*CLP90	COBALT,TOTAL	96.8	75-125	1.6	UG/L	500	484	
06/24/92	SPM*ALW2B*5	1034*CLP90	CHROMIUM,TOTAL	97.0	75-125	0.0	UG/L	200	194	
06/24/92	SPM*ALW2B*5	1042*CLP90	COPPER,TOTAL	99.2	75-125	12.9	UG/L	250	248	
06/24/92	SPM*ALW2B*5	1045*CLP90	IRON,TOTAL	92.8	75-125	60.0	UG/L	1000	928	
06/24/92	SPM*ALW2B*5	82034*CLP90	POTASSIUM,TOTAL	100.0	80-120	24900	UG/L	10000	10000	
06/24/92	SPM*ALW2B*5	927*CLP90	MAGNESIUM,TOTAL	97.0	80-120	34400	UG/L	10000	9700	
06/24/92	SPM*ALW2B*5	1055*CLP90	MANGANESE,TOTAL	96.8	75-125	278	UG/L	500	484	
06/24/92	SPM*ALW2B*5	82035*CLP90	SODIUM,TOTAL	110.0	75-125	181000	UG/L	10000	11000	
06/24/92	SPM*ALW2B*5	1067*CLP90	NICKEL,TOTAL	95.8	75-125	37.3	UG/L	500	479	
06/24/92	SPM*ALW2B*5	1097*CLP90	ANTIMONY,TOTAL	95.8	75-125	0.0	UG/L	500	479	
06/24/92	SPM*ALW2B*5	1087*CLP90	VANADIUM,TOTAL	99.8	75-125	6.0	UG/L	500	499	
06/24/92	SPM*ALW2B*5	1092*CLP90	ZINC,TOTAL	94.6	75-125	21.4	UG/L	500	473	

Replicate Analysis Sample Summary

DATE	SAMPLE	STORET	PARAMETER	UNITS	REP #1	REP #2	RPD	RPD CRIT
06/24/92	RP*ALW2B*5	1077*CLP90	SILVER,TOTAL	UG/L	<4.8	<4.8	0.0	20
06/24/92	RP*ALW2B*5	1105*CLP90	ALUMINUM,TOTAL	UG/L	<40.7	<40.7	0.0	20
06/24/92	RP*ALW2B*5	1007*CLP90	BARIUM,TOTAL	UG/L	81.9	77.5	5.5	20
06/24/92	RP*ALW2B*5	1012*CLP90	BERYLLIUM, TOTAL	UG/L	<2.5	<2.5	0.0	20
06/24/92	RP*ALW2B*5	82032*CLP90	CALCIUM,TOTAL	UG/L	48200	48100	0.2	20
06/24/92	RP*ALW2B*5	1027*CLP90	CADMIUM,TOTAL	UG/L	<3.9	<3.9	0.0	20
06/24/92	RP*ALW2B*5	1037*CLP90	COBALT,TOTAL	UG/L	<17.2	<17.2	0.0	20
06/24/92	RP*ALW2B*5	1034*CLP90	CHROMIUM,TOTAL	UG/L	<6.3	<6.3	0.0	20
06/24/92	RP*ALW2B*5	1042*CLP90	COPPER,TOTAL	UG/L	12.9	12.8	0.8	20
06/24/92	RP*ALW2B*5	1045*CLP90	IRON,TOTAL	UG/L	60.0	14.0	124	20
06/24/92	RP*ALW2B*5	82034*CLP90	POTASSIUM,TOTAL	UG/L	24900	24900	0.0	20
06/24/92	RP*ALW2B*5	927*CLP90	MAGNESIUM,TOTAL	UG/L	34400	34400	0.0	20
06/24/92	RP*ALW2B*5	1055*CLP90	MANGANESE,TOTAL	UG/L	278	278	0.0	20
06/24/92	RP*ALW2B*5	82035*CLP90	SODIUM,TOTAL	UG/L	181000	182000	0.6	20
06/24/92	RP*ALW2B*5	1067*CLP90	NICKEL,TOTAL	UG/L	37.3	38.9	4.2	20
06/24/92	RP*ALW2B*5	1097*CLP90	ANTIMONY,TOTAL	UG/L	<37.5	<37.5	0.0	20
06/24/92	RP*ALW2B*5	1087*CLP90	VANADIUM,TOTAL	UG/L	<6.0	<6.0	0.0	20
06/24/92	RP*ALW2B*5	1092*CLP90	ZINC,TOTAL	UG/L	21.4	16.0	28.9	20

Serial Dilution Sample Summary

DATE	SAMPLE	STORET	PARAMETER	UNITS	REP #1	REP #2	RPD	RPD CRIT
06/24/92	SD*ALW2B*5	1077*CLP90	SILVER,TOTAL	UG/L	0.0	ND	NC	10
06/24/92	SD*ALW2B*5	1105*CLP90	ALUMINUM,TOTAL	UG/L	10.5	222	NC	10
06/24/92	SD*ALW2B*5	1007*CLP90	BARIUM,TOTAL	UG/L	81.9	84.3	2.9	10
06/24/92	SD*ALW2B*5	1012*CLP90	BERYLLIUM, TOTAL	UG/L	0.0	ND	NC	10
06/24/92	SD*ALW2B*5	82032*CLP90	CALCIUM,TOTAL	UG/L	48200	49900	3.5	10
06/24/92	SD*ALW2B*5	1027*CLP90	CADMIUM,TOTAL	UG/L	0.3	2.4	NC	10
06/24/92	SD*ALW2B*5	1037*CLP90	COBALT,TOTAL	UG/L	1.6	4.2	NC	10
06/24/92	SD*ALW2B*5	1034*CLP90	CHROMIUM,TOTAL	UG/L	0.0	5.9	NC	10
06/24/92	SD*ALW2B*5	1042*CLP90	COPPER,TOTAL	UG/L	12.9	35.2	NC	10
06/24/92	SD*ALW2B*5	1045*CLP90	IRON,TOTAL	UG/L	60.0	165	NC	10
06/24/92	SD*ALW2B*5	82034*CLP90	POTASSIUM,TOTAL	UG/L	24900	26200	NC	10
06/24/92	SD*ALW2B*5	927*CLP90	MAGNESIUM,TOTAL	UG/L	34400	35100	2.0	10
06/24/92	SD*ALW2B*5	1055*CLP90	MANGANESE,TOTAL	UG/L	278	291	4.6	10
06/24/92	SD*ALW2B*5	82035*CLP90	SODIUM,TOTAL	UG/L	181000	185000	2.2	10
06/24/92	SD*ALW2B*5	1067*CLP90	NICKEL,TOTAL	UG/L	37.3	55.4	NC	10
06/24/92	SD*ALW2B*5	1097*CLP90	ANTIMONY,TOTAL	UG/L	0.0	ND	NC	10
06/24/92	SD*ALW2B*5	1087*CLP90	VANADIUM,TOTAL	UG/L	6.0	13.9	NC	10
06/24/92	SD*ALW2B*5	1092*CLP90	ZINC,TOTAL	UG/L	21.4	73.1	NC	10

ESE BATCH : G29073

Environmental Science and Engineering Analytical Services

Computer QC Checks

Batch No.: G29073 Analysis Date: 06/24/92 Analyst: GARRY PRICE

	Yes	"Exceptions" No	Comment / Corrective Action
Analysis holding time within criteria?	X		
Extract holding time within criteria?	X		
ICB present?	X		
ICB within acceptance criteria?	X		
CCB present?	X		
CCB within acceptance criteria?	X		
ICV present?	X		
ICV within acceptance criteria?	X		
CCV present?	X		
CCV within acceptance criteria?	X		
LCS present?	X		
LCS within acceptance criteria?	X		
ICS present?	X		
ICS within acceptance criteria?	X		
Method blank present?	X		
Method blank within acceptance criteria?	X		
Sample matrix spike present?	X		
Sample matrix spike within acceptance criteria?	X		
Sample replicate present?	X		
Sample replicate within acceptance criteria?		X	1045*CLP90 1092*CLP90
SD present?	X		
SD within acceptance criteria?	X		

Note: Any "NO" answer requires a comment.

OVERRIDE COMMENTS

PROB.:REPLICATE OUTSIDE OF CRITERIA.
EXPL.:SAMPLE MATRIX INTERFERENCE./JMHE

Mercury

ESE BATCH : G28781

Environmental Science and Engineering Analytical Services

Computer QC Checks

Batch No.: G28781 Analysis Date: 06/17/92 Analyst: DAVID NICHOLS

	Yes	"Exceptions" No	Comment / Corrective Action
Analysis holding time within criteria?	X		
Extract holding time within criteria?	X		
No. of calibration standards present acceptable?	X		
Curve correlation coefficient >= 0.995?	X		
Calibration curve y-intercept < curve detection limit?	X		
Sample responses within highest standard response?	X		
ICB present?	X		
ICB within acceptance criteria?	X		
CCB present?	X		
CCB within acceptance criteria?	X		
ICV present?	X		
ICV within acceptance criteria?	X		
CCV present?	X		
CCV within acceptance criteria?	X		
LCS present?	X		
LCS within acceptance criteria?	X		
Method blank present?	X		
Method blank within acceptance criteria?	X		
Sample matrix spike present?	X		
Sample matrix spike within acceptance criteria?	X		
Sample replicate present?	X		
Sample replicate within acceptance criteria?	X		

Note: Any "NO" answer requires a comment.

ESE BATCH : G28781
CLASSIFICATION : MERCURY - CLP SOW 3/90

STATUS : FINAL

METHOD BLANK CORRECTION METHOD : NONE

FIELD GRP	PROJECT NUMBER	PROJECT NAME	LAB COORDINATOR
ALW2B	3914042 0201	JMM/ALAMEDA NASCTO-121	JACKIE HARGROVE-ELLI

SAMPLE CODE	CLIENT ID	DATE ANALYZED	TIME ANALYZED
ALW2B*1	M-BG1-GW		
ALW2B*2	M-BG2-GW		
ALW2B*3	M-BG3-GW		
ALW2B*4	M-BG4-GW		
ALW2B*10	EB1		
ALW2B*12	EB3		
ALW2B*13	B-05PS-01		
ALW2B*14	B-05PS-02		
ALW2B*15	B-05PS-03		
ALW2B*16	B-05PS-04		
ALW2B*17	B-05PS-05		
ALW2B*23	B-05PS-DUP		
ALW2B*24	B-05WT-01		
ALW2B*25	B-05WT-02		

Initial Calibration Blank Summary

DATE	SAMPLE	STORET	PARAMETER	UNITS	FOUND
06/17/92	ICB*QC*1	71900*CLP90	MERCURY, TOTAL	UG/L	ND

Continuing Calibration Blank Sample Summary

DATE	SAMPLE	STORET	PARAMETER	UNITS	FOUND
06/17/92	CCB*QC*1	71900*CLP90	MERCURY, TOTAL	UG/L	0.04
06/17/92	CCB*QC*2	71900*CLP90	MERCURY, TOTAL	UG/L	ND

Initial Calibration Verification Sample Summary

DATE	SAMPLE	STORET	PARAMETER	UNITS	TARGET	FOUND	%RECV	RECV CRIT
06/17/92	ICV*PE-PURE*1	71900*CLP90	MERCURY, TOTAL	UG/L	5.0	4.8	96.0	80-120

Continuing Calibration Verification Sample Summary

DATE	SAMPLE	STORET	PARAMETER	UNITS	TARGET	FOUND	%RECV	RECV CRIT
06/17/92	CCV*QC*1	71900*CLP90	MERCURY, TOTAL	UG/L	5.0	4.9	98.0	80-120
06/17/92	CCV*QC*2	71900*CLP90	MERCURY, TOTAL	UG/L	5.0	4.9	98.0	80-120
06/17/92	CCV*QC*3	71900*CLP90	MERCURY, TOTAL	UG/L	5.0	4.1	82.0	80-120

Laboratory Control Sample Summary

DATE	SAMPLE	STORET	PARAMETER	%RECV	RECV CRIT	UNITS	TARGET	FOUND
06/17/92	LCS*QC*1	71900*CLP90	MERCURY, TOTAL	100.0	80-120	UG/L	1.0	1.0

Method Blank Sample Summary

DATE	SAMPLE	STORET	PARAMETER	UNITS	FOUND
06/17/92	MB*QC*1	71900*CLP90	MERCURY, TOTAL	UG/L	ND

Sample Matrix Spike Recovery Summary

DATE	SAMPLE	STORET	PARAMETER	%RECV	RECV CRIT	UNSPIKED	UNITS	TARGET	FOUND	RPD
06/17/92	SPM1*ALW2B*23	71900*CLP90	MERCURY, TOTAL	80.0	75-125	0.0	UG/L	1.0	0.8	

Replicate Analysis Sample Summary

DATE	SAMPLE	STORET	PARAMETER	UNITS	REP #1	REP #2	RPD	RPD CRIT
06/17/92	RP*ALW2B*23	71900*CLP90	MERCURY, TOTAL	UG/L	<0.2	<0.2	0.0	20

ESE BATCH : G29207
CLASSIFICATION : MERCURY - CLP SOW 3/90

STATUS : FINAL

METHOD BLANK CORRECTION METHOD : NONE

FIELD GRP	PROJECT NUMBER	PROJECT NAME	LAB COORDINATOR
ALW2B	3914042 0201	JMM/ALAMEDA NASCTO-121	JACKIE HARGROVE-ELLI

SAMPLE CODE	CLIENT ID	DATE ANALYZED	TIME ANALYZED
ALW2B*5	M-BG-DUP1		
ALW2B*11	EB2		
ALW2B*26	B-05HW-01		
ALW2B*27	B-05BS-01		

Initial Calibration Blank Summary

DATE	SAMPLE	STORET	PARAMETER	UNITS	FOUND
06/29/92	ICB*QC*1	71900*CLP90	MERCURY,TOTAL	UG/L	ND

Continuing Calibration Blank Sample Summary

DATE	SAMPLE	STORET	PARAMETER	UNITS	FOUND
06/29/92	CCB*QC*1	71900*CLP90	MERCURY,TOTAL	UG/L	ND

Initial Calibration Verification Sample Summary

DATE	SAMPLE	STORET	PARAMETER	UNITS	TARGET	FOUND	%RECV	RECV CRIT
06/29/92	ICV*PE-PURE*1	71900*CLP90	MERCURY,TOTAL	UG/L	5.0	5.1	102	80-120

Continuing Calibration Verification Sample Summary

DATE	SAMPLE	STORET	PARAMETER	UNITS	TARGET	FOUND	%RECV	RECV CRIT
06/29/92	CCV*QC*1	71900*CLP90	MERCURY,TOTAL	UG/L	5.0	5.2	104	80-120

Laboratory Control Sample Summary

DATE	SAMPLE	STORET	PARAMETER	%RECV	RECV CRIT	UNITS	TARGET	FOUND
06/29/92	LCS*ESE*1	71900*CLP90	MERCURY,TOTAL	100.0	80-120	UG/L	1.0	1.0

Method Blank Sample Summary

DATE	SAMPLE	STORET	PARAMETER	UNITS	FOUND
06/29/92	MB*QC*1	71900*CLP90	MERCURY,TOTAL	UG/L	ND

Sample Matrix Spike Recovery Summary

DATE	SAMPLE	STORET	PARAMETER	%RECV	RECV CRIT	UNSPIKED	UNITS	TARGET	FOUND	RPD
06/29/92	SPM*ALW2B*5	71900*CLP90	MERCURY,TOTAL	100.0	75-125	0.0	UG/L	1.0	1.0	

Replicate Analysis Sample Summary

DATE	SAMPLE	STORET	PARAMETER	UNITS	REP #1	REP #2	RPD	RPD CRIT
06/29/92	RP*ALW2B*5	71900*CLP90	MERCURY,TOTAL	UG/L	<0.2	<0.2	0.0	20

ESE BATCH : G29207

Environmental Science and Engineering Analytical Services
Computer QC Checks

Batch No.: G29207 Analysis Date: 06/29/92 Analyst: AMY VAN NOSTRAND

	Yes	"Exceptions" No	Comment / Corrective Action
Analysis holding time within criteria?	X		
Extract holding time within criteria?	X		
No. of calibration standards present acceptable?	X		
Curve correlation coefficient >= 0.995?	X		
Calibration curve y-intercept < curve detection limit?	X		
Sample responses within highest standard response?	X		
ICB present?	X		
ICB within acceptance criteria?	X		
CCB present?	X		
CCB within acceptance criteria?	X		
ICV present?	X		
ICV within acceptance criteria?	X		
CCV present?	X		
CCV within acceptance criteria?	X		
LCS present?	X		
LCS within acceptance criteria?	X		
Method blank present?	X		
Method blank within acceptance criteria?	X		
Sample matrix spike present?	X		
Sample matrix spike within acceptance criteria?	X		
Sample replicate present?	X		
Sample replicate within acceptance criteria?	X		

Note: Any "NO" answer requires a comment.

OVERRIDE COMMENTS

Flouride

ESE BATCH : G29192
CLASSIFICATION : FLUORIDE - E340.2

STATUS : FINAL

METHOD BLANK CORRECTION METHOD : NONE

FIELD GRP	PROJECT NUMBER	PROJECT NAME	LAB COORDINATOR
ALW2B	3914042 0201	JMM/ALAMEDA NASCTO-121	JACKIE HARGROVE-ELLI

SAMPLE CODE	CLIENT ID	DATE ANALYZED	TIME ANALYZED
ALW2B*1	M-BG1-GW		
ALW2B*2	M-BG2-GW		
ALW2B*3	M-BG3-GW		
ALW2B*4	M-BG4-GW		
ALW2B*5	M-BG-DUP1		
ALW2B*10	EB1		
ALW2B*11	EB2		

Initial Calibration Blank Summary

DATE	SAMPLE	STORET	PARAMETER	UNITS	FOUND
06/24/92	ICB*QC*1	951*ELEC	FLUORIDE	MG/L	0.008

Continuing Calibration Blank Sample Summary

DATE	SAMPLE	STORET	PARAMETER	UNITS	FOUND
06/24/92	CCB*QC*1	951*ELEC	FLUORIDE	MG/L	0.01
06/24/92	CCB*QC*2	951*ELEC	FLUORIDE	MG/L	0.01
06/24/92	CCB*QC*3	951*ELEC	FLUORIDE	MG/L	0.01
06/24/92	CCB*QC*4	951*ELEC	FLUORIDE	MG/L	0.01
06/24/92	CCB*QC*5	951*ELEC	FLUORIDE	MG/L	0.009

Initial Calibration Verification Sample Summary

DATE	SAMPLE	STORET	PARAMETER	UNITS	TARGET	FOUND	%RECV	RECV CRIT
06/24/92	ICV*QC*1	951*ELEC	FLUORIDE	MG/L	2.00	2.02	101	80-120

Continuing Calibration Verification Sample Summary

DATE	SAMPLE	STORET	PARAMETER	UNITS	TARGET	FOUND	%RECV	RECV CRIT
06/24/92	CCV*QC*1	951*ELEC	FLUORIDE	MG/L	2.00	2.06	103	80-120
06/24/92	CCV*QC*2	951*ELEC	FLUORIDE	MG/L	2.00	2.02	101	80-120
06/24/92	CCV*QC*3	951*ELEC	FLUORIDE	MG/L	2.00	2.03	102	80-120
06/24/92	CCV*QC*4	951*ELEC	FLUORIDE	MG/L	2.00	2.02	101	80-120
06/24/92	CCV*QC*5	951*ELEC	FLUORIDE	MG/L	2.00	2.02	101	80-120

Method Blank Sample Summary

DATE	SAMPLE	STORET	PARAMETER	UNITS	FOUND
06/24/92	MB*QC*1	951*ELEC	FLUORIDE	MG/L	0.008
06/24/92	MB*QC*2	951*ELEC	FLUORIDE	MG/L	0.01
06/24/92	MB*QC*3	951*ELEC	FLUORIDE	MG/L	0.01
06/24/92	MB*QC*4	951*ELEC	FLUORIDE	MG/L	0.01
06/24/92	MB*QC*5	951*ELEC	FLUORIDE	MG/L	0.01

Standard Matrix Spike Recovery Summary

DATE	SAMPLE	STORET	PARAMETER	%RECV	RECV CRIT	UNITS	TARGET	FOUND
06/24/92	SP*QC*1	951*ELEC	FLUORIDE	100.5	84-112	MG/L	2.00	2.01
06/24/92	SP*QC*2	951*ELEC	FLUORIDE	102.5	84-112	MG/L	2.00	2.05
06/24/92	SP*QC*3	951*ELEC	FLUORIDE	100.5	84-112	MG/L	2.00	2.01
06/24/92	SP*QC*4	951*ELEC	FLUORIDE	101.0	84-112	MG/L	2.00	2.02
06/24/92	SP*QC*5	951*ELEC	FLUORIDE	100.5	84-112	MG/L	2.00	2.01

Sample Matrix Spike Recovery Summary

DATE	SAMPLE	STORET	PARAMETER	%RECV	RECV CRIT	UNSPIKED	UNITS	TARGET	FOUND	RPD
06/24/92	SPM1*NON-AL*3	951*ELEC	FLUORIDE	94.0	84-112	0.11	MG/L	2.00	1.88	
06/24/92	SPM2*NON-AL*3	951*ELEC	FLUORIDE	96.0	84-112	0.11	MG/L	2.00	1.92	2.11
06/24/92	SPM1*NON-AL*36	951*ELEC	FLUORIDE	100.0	84-112	0.43	MG/L	2.00	2.00	
06/24/92	SPM2*NON-AL*36	951*ELEC	FLUORIDE	101.0	84-112	0.43	MG/L	2.00	2.02	1.00
06/24/92	SPM1*NON-AL*20	951*ELEC	FLUORIDE	102.0	84-112	0.05	MG/L	2.00	2.04	
06/24/92	SPM2*NON-AL*20	951*ELEC	FLUORIDE	102.5	84-112	0.05	MG/L	2.00	2.05	0.98
06/24/92	SPM1*NON-AL*94	951*ELEC	FLUORIDE	98.5	84-112	0.06	MG/L	2.00	1.97	
06/24/92	SPM2*NON-AL*94	951*ELEC	FLUORIDE	99.0	84-112	0.06	MG/L	2.00	1.98	0.51

ESE BATCH : G29192

Environmental Science and Engineering Analytical Services
Computer QC Checks

Batch No.: G29192 Analysis Date: 06/24/92 Analyst: ELIZABETH KENNELLEY

	Yes	"Exceptions" No	Comment / Corrective Action
Analysis holding time within criteria?	X		
Extract holding time within criteria?	X		
No. of calibration standards present acceptable?	X		
Curve correlation coefficient >= 0.995?	X		
Calibration curve y-intercept < curve detection limit?	X		
Sample responses within highest standard response?	X		
Method blank present?	X		
Method blank within acceptance criteria?	X		
Standard matrix spike present?	X		
Standard matrix spike within acceptance criteria?	X		
Sample matrix spike present?	X		
Sample matrix spike within acceptance criteria?	X		
Sample matrix spike duplicate present?	X		
Sample matrix spike duplicate within acceptance criteria?	X		

Note: Any "NO" answer requires a comment.

OVERRIDE COMMENTS

MS/MSD WERE PERFORMED ON NON-ALAMEDA SAMPLES./JMHE

IC: Common Anions

ESE BATCH : G29096
CLASSIFICATION : COMMON ANIONS-E300

STATUS : FINAL

METHOD BLANK CORRECTION METHOD : NONE

FIELD GRP	PROJECT NUMBER	PROJECT NAME	LAB COORDINATOR
ALW2B	3914042 0201	JMM/ALAMEDA NASCTO-121	JACKIE HARGROVE-ELLI

SAMPLE CODE	CLIENT ID	DATE ANALYZED	TIME ANALYZED
ALW2B*5	M-BG-DUP1		
ALW2B*1	M-BG1-GW		
ALW2B*2	M-BG2-GW		
ALW2B*3	M-BG3-GW		
ALW2B*4	M-BG4-GW		
ALW2B*10	EB1		
ALW2B*11	EB2		

Continuing Calibration Blank Sample Summary

DATE	SAMPLE	STORET	PARAMETER	UNITS	FOUND
06/23/92	CCB*QC*1	940*IC	CHLORIDE	MG/L	0.059
06/23/92	CCB*QC*1	945*IC	SULFATE	MG/L	0.363

Method Blank Sample Summary

DATE	SAMPLE	STORET	PARAMETER	UNITS	FOUND
06/23/92	MB*QC*1	940*IC	CHLORIDE	MG/L	0.059
06/23/92	MB*QC*1	945*IC	SULFATE	MG/L	0.363

Standard Matrix Spike Recovery Summary

DATE	SAMPLE	STORET	PARAMETER	%RECV	RECV CRIT	UNITS	TARGET	FOUND
06/23/92	SP1*QC*1	940*IC	CHLORIDE	100.60	95-107	MG/L	10.000	10.06
06/23/92	SP1*QC*1	945*IC	SULFATE	99.96	95-107	MG/L	50.00	49.98
06/23/92	SP2*QC*1	940*IC	CHLORIDE	101.10	95-107	MG/L	10.000	10.11
06/23/92	SP2*QC*1	945*IC	SULFATE	100.26	95-107	MG/L	50.00	50.13

Sample Matrix Spike Recovery Summary

DATE	SAMPLE	STORET	PARAMETER	%RECV	RECV CRIT	UNSPIKED	UNITS	TARGET	FOUND	RPD
06/23/92	SPM1*ALW2B*5	940*IC	CHLORIDE	102.60	95-107	17.33	MG/L	10.000	10.26	
06/23/92	SPM1*ALW2B*5	945*IC	SULFATE	101.32	95-107	36.93	MG/L	50.00	50.66	
06/23/92	SPM2*ALW2B*5	940*IC	CHLORIDE	102.80	95-107	17.33	MG/L	10.000	10.28	0.195
06/23/92	SPM2*ALW2B*5	945*IC	SULFATE	101.12	95-107	36.93	MG/L	50.00	50.56	0.198

Computer QC Checks

Batch No.: G29096 Analysis Date: 06/23/92 Analyst: ROBERT KEMERAIT, JR.

	Yes	"Exceptions" No	Comment / Corrective Action
Analysis holding time within criteria?	X		
Extract holding time within criteria?	X		
No. of calibration standards present acceptable?	X		
Curve correlation coefficient >= 0.995?	X		
Calibration curve y-intercept < curve detection limit?	X		
Sample responses within highest standard response?	X		
Method blank present?	X		
Method blank within acceptance criteria?	X		
Standard matrix spike present?	X		
Standard matrix spike within acceptance criteria?	X		
Sample matrix spike present?	X		
Sample matrix spike within acceptance criteria?	X		
Sample matrix spike duplicate present?	X		
Sample matrix spike duplicate within acceptance criteria?	X		

Note: Any "NO" answer requires a comment.

Hardness

ESE BATCH : G29327
CLASSIFICATION : HARDNESS - EPA 130.2

STATUS : FINAL

METHOD BLANK CORRECTION METHOD : NONE

FIELD GRP	PROJECT NUMBER	PROJECT NAME	LAB COORDINATOR
ALW2B	3914042 0201	JMM/ALAMEDA NASCTO-121	JACKIE HARGROVE-ELLI

SAMPLE CODE	CLIENT ID	DATE ANALYZED	TIME ANALYZED
ALW2B*5	M-BG-DUP1		

Continuing Calibration Blank Sample Summary

DATE	SAMPLE	STORET	PARAMETER	UNITS	FOUND
06/30/92	CCB*QC*1	900*1	HARDNESS	MG/L-CACO3	ND

Continuing Calibration Verification Sample Summary

DATE	SAMPLE	STORET	PARAMETER	UNITS	TARGET	FOUND	%RECV	RECV CRIT
06/30/92	CCV*QC*1	900*1	HARDNESS	MG/L-CACO3	1000	995	99.5	80-120

Method Blank Sample Summary

DATE	SAMPLE	STORET	PARAMETER	UNITS	FOUND
06/30/92	MB*QC*1	900*1	HARDNESS	MG/L-CACO3	ND
06/30/92	MB*QC*2	900*1	HARDNESS	MG/L-CACO3	ND

Standard Matrix Spike Recovery Summary

DATE	SAMPLE	STORET	PARAMETER	%RECV	RECV CRIT	UNITS	TARGET	FOUND
06/30/92	SP1*QC*1	900*1	HARDNESS	107.0	85-115	MG/L-CACO3	1000	1070
06/30/92	SP2*QC*1	900*1	HARDNESS	99.5	85-115	MG/L-CACO3	1000	995

Computer QC Checks

Batch No.: G29327 Analysis Date: 06/30/92 Analyst: KATHLEEN ALLEN

	Yes	"Exceptions" No	Comment / Corrective Action
Analysis holding time within criteria?	X		
Extract holding time within criteria?	X		
Method blank present?	X		
Method blank within acceptance criteria?	X		
Standard matrix spike present?	X		
Standard matrix spike within acceptance criteria?	X		
Sample matrix spike present?		X	
Sample matrix spike within acceptance criteria?			

Note: Any "NO" answer requires a comment.

OVERRIDE COMMENTS

PROB:SAMPLE MATRIX SPIKE NOT PRESENT.
EXPL:SEE G29253 FOR QC./KKA/7/3/92

Nitrite Plus Nitrate

ESE BATCH : G29087
CLASSIFICATION : NO2 + NO3 TECH. - E353.2

STATUS : FINAL

METHOD BLANK CORRECTION METHOD : NONE

FIELD GRP	PROJECT NUMBER	PROJECT NAME	LAB COORDINATOR
ALW2B	3914042 0201	JMM/ALAMEDA NASCTO-121	JACKIE HARGROVE-ELLI

SAMPLE CODE	CLIENT ID	DATE ANALYZED	TIME ANALYZED
ALW2B*1	M-BG1-GW		
ALW2B*3	M-BG3-GW		
ALW2B*10	EB1		
ALW2B*2	M-BG2-GW		
ALW2B*4	M-BG4-GW		

Initial Calibration Blank Summary

DATE	SAMPLE	STORET	PARAMETER	UNITS	FOUND
06/22/92	ICB*QC*1	630*TECH	NITROG,NO2+NO3	MG/L AS N	ND

Continuing Calibration Blank Sample Summary

DATE	SAMPLE	STORET	PARAMETER	UNITS	FOUND
06/22/92	CCB*QC*1	630*TECH	NITROG,NO2+NO3	MG/L AS N	0.001
06/22/92	CCB*QC*2	630*TECH	NITROG,NO2+NO3	MG/L AS N	ND

Initial Calibration Verification Sample Summary

DATE	SAMPLE	STORET	PARAMETER	UNITS	TARGET	FOUND	%RECV	RECV CRIT
06/22/92	ICV*QC*1	630*TECH	NITROG,NO2+NO3	MG/L AS N	0.500	0.494	98.8	80-120

Continuing Calibration Verification Sample Summary

DATE	SAMPLE	STORET	PARAMETER	UNITS	TARGET	FOUND	%RECV	RECV CRIT
06/22/92	CCV*QC*1	630*TECH	NITROG,NO2+NO3	MG/L AS N	0.500	0.487	97.4	80-120
06/22/92	CCV*QC*2	630*TECH	NITROG,NO2+NO3	MG/L AS N	0.500	0.493	98.6	80-120

Method Blank Sample Summary

DATE	SAMPLE	STORET	PARAMETER	UNITS	FOUND
06/22/92	MB*QC*1	630*TECH	NITROG,NO2+NO3	MG/L AS N	ND

Standard Matrix Spike Recovery Summary

DATE	SAMPLE	STORET	PARAMETER	%RECV	RECV CRIT	UNITS	TARGET	FOUND
06/22/92	SP1*QC*1	630*TECH	NITROG,NO2+NO3	98.0	90-104	MG/L AS N	0.100	0.098
06/22/92	SP2*QC*1	630*TECH	NITROG,NO2+NO3	98.0	90-104	MG/L AS N	0.100	0.098

Sample Matrix Spike Recovery Summary

DATE	SAMPLE	STORET	PARAMETER	%RECV	RECV CRIT	UNSPIKED	UNITS	TARGET	FOUND	RPD
06/22/92	SPM1*ALW2B*4	630*TECH	NITROG,NO2+NO3	90.0	90-104	1.26	MG/L AS N	0.100	0.090	
06/22/92	SPM2*ALW2B*4	630*TECH	NITROG,NO2+NO3	60.0	90-104	1.26	MG/L AS N	0.100	0.060	40.0

ESE BATCH : G29087

Environmental Science and Engineering Analytical Services
Computer QC Checks

Batch No.: G29087 Analysis Date: 06/22/92 Analyst: DEBRA MAYES

	Yes	"Exceptions" No	Comment / Corrective Action
Analysis holding time within criteria?	X		
Extract holding time within criteria?	Y		
No. of calibration standards present acceptable?	X		
Curve correlation coefficient >= 0.995?	X		
Calibration curve y-intercept < curve detection limit?	X		
Sample responses within highest standard response?	X		
Method blank present?	X		
Method blank within acceptance criteria?	X		
Standard matrix spike present?	X		
Standard matrix spike within acceptance criteria?	X		
Sample matrix spike present?	X		
Sample matrix spike within acceptance criteria?	X		
Sample matrix spike duplicate present?	X		
Sample matrix spike duplicate within acceptance criteria?		X	630*TECH _____

Note: Any "NO" answer requires a comment.

OVERRIDE COMMENTS

PROB:SAMPLE MATRIX SPIKE DUPLICATE
NOT WITHIN ACCEPTANCE CRITERIA.
EXPL:SAMPLE VERY HIGH, SPIKE LEVEL
SMALL./kkA/6/25/92

ESE BATCH : G29099
CLASSIFICATION : NO2 + NO3 TECH. - E353.2

STATUS : FINAL

METHOD BLANK CORRECTION METHOD : NONE

FIELD GRP	PROJECT NUMBER	PROJECT NAME	LAB COORDINATOR
ALW2B	3914042 0201	JMM/ALAMEDA NASCTO-121	JACKIE HARGROVE-ELLI

SAMPLE CODE	CLIENT ID	DATE ANALYZED	TIME ANALYZED
ALW2B*I1	EB2		

Initial Calibration Blank Summary

DATE	SAMPLE	STORET	PARAMETER	UNITS	FOUND
06/24/92	ICB*QC*1	630*TECH	NITROG,NO2+NO3	MG/L AS N	0.002

Continuing Calibration Blank Sample Summary

DATE	SAMPLE	STORET	PARAMETER	UNITS	FOUND
06/24/92	CCB*QC*1	630*TECH	NITROG,NO2+NO3	MG/L AS N	ND

Initial Calibration Verification Sample Summary

DATE	SAMPLE	STORET	PARAMETER	UNITS	TARGET	FOUND	%RECV	RECV CRIT
06/24/92	ICV*QC*1	630*TECH	NITROG,NO2+NO3	MG/L AS N	0.500	0.496	99.2	80-120

Continuing Calibration Verification Sample Summary

DATE	SAMPLE	STORET	PARAMETER	UNITS	TARGET	FOUND	%RECV	RECV CRIT
06/24/92	CCV*QC*1	630*TECH	NITROG,NO2+NO3	MG/L AS N	0.500	0.497	99.4	80-120

Method Blank Sample Summary

DATE	SAMPLE	STORET	PARAMETER	UNITS	FOUND
06/24/92	MB*QC*1	630*TECH	NITROG,NO2+NO3	MG/L AS N	ND

Standard Matrix Spike Recovery Summary

DATE	SAMPLE	STORET	PARAMETER	%RECV	RECV CRIT	UNITS	TARGET	FOUND
06/24/92	SP1*QC*1	630*TECH	NITROG,NO2+NO3	96.0	90-104	MG/L AS N	0.100	0.096
06/24/92	SP2*QC*1	630*TECH	NITROG,NO2+NO3	95.0	90-104	MG/L AS N	0.100	0.095

Sample Matrix Spike Recovery Summary

DATE	SAMPLE	STORET	PARAMETER	%RECV	RECV CRIT	UNSPIKED	UNITS	TARGET	FOUND	RPD
06/24/92	SPM1*ALW2B*I1	630*TECH	NITROG,NO2+NO3	82.0	90-104	0.027	MG/L AS N	0.050	0.041	
06/24/92	SPM2*ALW2B*I1	630*TECH	NITROG,NO2+NO3	82.0	90-104	0.027	MG/L AS N	0.050	0.041	0.0

ESE BATCH : G29099

Environmental Science and Engineering Analytical Services
Computer QC Checks

Batch No.: G29099 Analysis Date: 06/24/92 Analyst: DEBRA MAYES

	Yes	"Exceptions" No	Comment / Corrective Action
Analysis holding time within criteria?	X		
Extract holding time within criteria?	X		
No. of calibration standards present acceptable?	X		
Curve correlation coefficient >= 0.995?	X		
Calibration curve y-intercept < curve detection limit?	X		
Sample responses within highest standard response?	X		
Method blank present?	X		
Method blank within acceptance criteria?	X		
Standard matrix spike present?	X		
Standard matrix spike within acceptance criteria?	X		
Sample matrix spike present?	X		
Sample matrix spike within acceptance criteria?		X	630*TECH
Sample matrix spike duplicate present?	X		
Sample matrix spike duplicate within acceptance criteria?		X	630*TECH

Note: Any "NO" answer requires a comment.

OVERRIDE COMMENTS

PROB:SAMPLE MATRIX SPIKE AND SAMPLE
MATRIX SPIKE DUPLICATE NOT WITH-
IN ACCEPTANCE.CRITERIA.
EXPL:METHOD IN CONTROL FOR BOTH./KKA/6/26/92
STANDARD MATRIX SPIKES WITHIN CRITERIA./JMHE

Total Dissolved Residue

ESE BATCH : G28677
CLASSIFICATION : TOTAL DISSOLVED RESIDUE, E160.1

STATUS : FINAL

METHOD BLANK CORRECTION METHOD : NONE

FIELD GRP	PROJECT NUMBER	PROJECT NAME	LAB COORDINATOR
ALW2B	3914042 0201	JMM/ALAMEDA NASCTO-121	JACKIE HARGROVE-ELLI

SAMPLE CODE	CLIENT ID	DATE ANALYZED	TIME ANALYZED
ALW2B*12	EB3		
ALW2B*13	B-05PS-01		
ALW2B*14	B-05PS-02		
ALW2B*15	B-05PS-03		
ALW2B*16	B-05PS-04		
ALW2B*17	B-05PS-05		
ALW2B*23	B-05PS-DUP		
ALW2B*24	B-05WT-01		
ALW2B*25	B-05WT-02		

Method Blank Sample Summary

DATE	SAMPLE	STORET	PARAMETER	UNITS	FOUND
06/09/92	MB*QC*1	70300*1	RESIDUE,DISS	MG/L	ND
06/09/92	MB*QC*2	70300*1	RESIDUE,DISS	MG/L	ND

Replicate Analysis Sample Summary

DATE	SAMPLE	STORET	PARAMETER	UNITS	REP #1	REP #2	RPD	RPD CRIT
06/09/92	RP*ALW2B*23	70300*1	RESIDUE,DISS	MG/L	2410	2540	5	19

Computer QC Checks

Batch No.: G28677 Analysis Date: 06/09/92 Analyst: DEBRA MAYES

	Yes	"Exceptions" No	Comment / Corrective Action
Analysis holding time within criteria?	X		
Extract holding time within criteria?	X		
Method blank present?	X		
Method blank within acceptance criteria?	X		
Sample replicate present?	X		
Sample replicate within acceptance criteria?	X		

Note: Any "NO" answer requires a comment.

ESE BATCH : G28752
CLASSIFICATION : TOTAL DISSOLVED RESIDUE, E160.1

STATUS : FINAL

METHOD BLANK CORRECTION METHOD : NONE

FIELD GRP	PROJECT NUMBER	PROJECT NAME	LAB COORDINATOR
ALW2B	3914042 0201	JMM/ALAMEDA NASCTO-121	JACKIE HARGROVE-ELLI

SAMPLE CODE	CLIENT ID	DATE ANALYZED	TIME ANALYZED
ALW2B*1	M-BG1-GW		
ALW2B*2	M-BG2-GW		
ALW2B*3	M-BG3-GW		
ALW2B*4	M-BG4-GW		
ALW2B*10	EB1		

Method Blank Sample Summary

DATE	SAMPLE	STORET	PARAMETER	UNITS	FOUND
06/16/92	MB*QC*1	70300*1	RESIDUE,DISS	MG/L	ND

Replicate Analysis Sample Summary

DATE	SAMPLE	STORET	PARAMETER	UNITS	REP #1	REP #2	RPD	RPD CRIT
06/16/92	RP*ALW2B*1	70300*1	RESIDUE,DISS	MG/L	13800	13300	4	19

Computer QC Checks

Batch No.: G28752 Analysis Date: 06/16/92 Analyst: DEANN TRAN

	"Exceptions" Yes	No	Comment / Corrective Action
Analysis holding time within criteria?	X		
Extract holding time within criteria?	X		
Method blank present?	X		
Method blank within acceptance criteria?	X		
Sample replicate present?	X		
Sample replicate within acceptance criteria?	X		

Note: Any "NO" answer requires a comment.

ESE BATCH : G28877
CLASSIFICATION : TOTAL DISSOLVED RESIDUE, E160.1

STATUS : FINAL

METHOD BLANK CORRECTION METHOD : NONE

FIELD GRP	PROJECT NUMBER	PROJECT NAME	LAB COORDINATOR
ALW2B	3914042 0201	JMM/ALAMEDA NASCTO-121	JACKIE HARGROVE-ELLI

SAMPLE CODE	CLIENT ID	DATE ANALYZED	TIME ANALYZED
ALW2B*5	M-BG-DUP1		
ALW2B*11	EB2		
ALW2B*26	B-05HW-01		
ALW2B*27	B-05BS-01		

Method Blank Sample Summary

DATE	SAMPLE	STORET	PARAMETER	UNITS	FOUND
06/18/92	MB*QC*1	70300*1	RESIDUE,DISS	MG/L	9

Replicate Analysis Sample Summary

DATE	SAMPLE	STORET	PARAMETER	UNITS	REP #1	REP #2	RPD	RPD CRIT
06/18/92	RP*ALW2B*5	70300*1	RESIDUE,DISS	MG/L	858	928	8	19

Computer QC Checks

Batch No.: G28877 Analysis Date: 06/18/92 Analyst: DEANN TRAN

	Yes	"Exceptions" No	Comment / Corrective Action
Analysis holding time within criteria?	X		
Extract holding time within criteria?	X		
Method blank present?	X		
Method blank within acceptance criteria?	X		
Sample replicate present?	X		
Sample replicate within acceptance criteria?	X		

Note: Any "NO" answer requires a comment.

Hexavalent Chromium

ESE BATCH : G28497
CLASSIFICATION : HEXAVALENT CHROMIUM - SW7196

STATUS : FINAL

METHOD BLANK CORRECTION METHOD : NONE

FIELD GRP	PROJECT NUMBER	PROJECT NAME	LAB COORDINATOR
ALW2B	3914042 0201	JMM/ALAMEDA NASCTO-121	JACKIE HARGROVE-ELLI

SAMPLE CODE	CLIENT ID	DATE ANALYZED	TIME ANALYZED
ALW2B*12	EB3		
ALW2B*14	B-05PS-02		
ALW2B*15	B-05PS-03		
ALW2B*16	B-05PS-04		
ALW2B*17	B-05PS-05		

Initial Calibration Blank Summary

DATE	SAMPLE	STORET	PARAMETER	UNITS	FOUND
06/04/92	ICB*QC*1	1032*1	CHROMIUM,(+6)	UG/L	ND

Continuing Calibration Blank Sample Summary

DATE	SAMPLE	STORET	PARAMETER	UNITS	FOUND
06/04/92	CCB*QC*1	1032*1	CHROMIUM,(+6)	UG/L	ND

Initial Calibration Verification Sample Summary

DATE	SAMPLE	STORET	PARAMETER	UNITS	TARGET	FOUND	%RECV	RECV CRIT
06/04/92	ICV*QC*1	1032*1	CHROMIUM,(+6)	UG/L	50.0	51.3	103	80-120

Continuing Calibration Verification Sample Summary

DATE	SAMPLE	STORET	PARAMETER	UNITS	TARGET	FOUND	%RECV	RECV CRIT
06/04/92	CCV*QC*1	1032*1	CHROMIUM,(+6)	UG/L	50.0	50.6	101	80-120

Method Blank Sample Summary

DATE	SAMPLE	STORET	PARAMETER	UNITS	FOUND
06/04/92	MB*QC*1	1032*1	CHROMIUM,(+6)	UG/L	ND

Standard Matrix Spike Recovery Summary

DATE	SAMPLE	STORET	PARAMETER	%RECV	RECV CRIT	UNITS	TARGET	FOUND
06/04/92	SP*QC*1	1032*1	CHROMIUM,(+6)	102.6	83-113	UG/L	50.0	51.3

Sample Matrix Spike Recovery Summary

DATE	SAMPLE	STORET	PARAMETER	%RECV	RECV CRIT	UNSPIKED	UNITS	TARGET	FOUND	RPD
06/04/92	SPM*ALW2B*17	1032*1	CHROMIUM,(+6)	86.0	83-113	3420	UG/L	25000	21500	

Replicate Analysis Sample Summary

DATE	SAMPLE	STORET	PARAMETER	UNITS	REP #1	REP #2	RPD	RPD CRIT
06/04/92	RP*ALW2B*17	1032*1	CHROMIUM,(+6)	UG/L	<5000	<5000	0.0	20

ESE BATCH : G28497

Computer QC Checks

Batch No.: G28497 Analysis Date: 06/04/92 Analyst: ELIZABETH KENNELLEY

	Yes	"Exceptions" No	Comment / Corrective Action
Analysis holding time within criteria?	X		
Extract holding time within criteria?	X		
No. of calibration standards present acceptable?	X		
Curve correlation coefficient >= 0.995?	X		
Calibration curve y-intercept < curve detection limit?	X		
Sample responses within highest standard response?	X		
Method blank present?	X		
Method blank within acceptance criteria?	X		
Standard matrix spike present?	X		
Standard matrix spike within acceptance criteria?	X		
Sample matrix spike present?	X		
Sample matrix spike within acceptance criteria?	X		
Sample matrix spike duplicate present?		X	----------
Sample matrix spike duplicate within acceptance criteria?			

Note: Any "NO" answer requires a comment.

OVERRIDE COMMENTS

PROB:SAMPLE MATRIX SPIKE DUPLICATE
NOT PRESENT.
EXPL:NOT REQUIRED FOR CLP PROTOCOL.
MS/RP ANALYZED./JMHE
OK.KKA/6/22/92

ESE BATCH : G28499
CLASSIFICATION : HEXAVALENT CHROMIUM - SW7196

STATUS : FINAL

METHOD BLANK CORRECTION METHOD : NONE

FIELD GRP	PROJECT NUMBER	PROJECT NAME	LAB COORDINATOR
ALW2B	3914042 0201	JMM/ALAMEDA NASCTO-121	JACKIE HARGROVE-ELLI

SAMPLE CODE	CLIENT ID	DATE ANALYZED	TIME ANALYZED
ALW2B*13	B-05PS-01		
ALW2B*23	B-05PS-DUP		
ALW2B*24	B-05WT-01		
ALW2B*25	B-05WT-02		

Initial Calibration Blank Summary

DATE	SAMPLE	STORET	PARAMETER	UNITS	FOUND
06/05/92	ICB*QC*1	1032*1	CHROMIUM,(+6)	UG/L	ND

Continuing Calibration Blank Sample Summary

DATE	SAMPLE	STORET	PARAMETER	UNITS	FOUND
06/05/92	CCB*QC*1	1032*1	CHROMIUM,(+6)	UG/L	0.217

Initial Calibration Verification Sample Summary

DATE	SAMPLE	STORET	PARAMETER	UNITS	TARGET	FOUND	%RECV	RECV CRIT
06/05/92	ICV*QC*1	1032*1	CHROMIUM,(+6)	UG/L	50.0	51.5	103	80-120

Continuing Calibration Verification Sample Summary

DATE	SAMPLE	STORET	PARAMETER	UNITS	TARGET	FOUND	%RECV	RECV CRIT
06/05/92	CCV*QC*1	1032*1	CHROMIUM,(+6)	UG/L	50.0	50.3	101	80-120

Method Blank Sample Summary

DATE	SAMPLE	STORET	PARAMETER	UNITS	FOUND
06/05/92	MB*QC*1	1032*1	CHROMIUM,(+6)	UG/L	ND

Standard Matrix Spike Recovery Summary

DATE	SAMPLE	STORET	PARAMETER	%RECV	RECV CRIT	UNITS	TARGET	FOUND
06/05/92	SP*QC*1	1032*1	CHROMIUM,(+6)	103.0	83-113	UG/L	50.0	51.5

Sample Matrix Spike Recovery Summary

DATE	SAMPLE	STORET	PARAMETER	%RECV	RECV CRIT	UNSPIKED	UNITS	TARGET	FOUND	RPD
06/05/92	SPM*ALW2B*23	1032*1	CHROMIUM,(+6)	102.0	83-113	946	UG/L	10000	10200	

Replicate Analysis Sample Summary

DATE	SAMPLE	STORET	PARAMETER	UNITS	REP #1	REP #2	RPD	RPD CRIT
06/05/92	RP*ALW2B*23	1032*1	CHROMIUM,(+6)	UG/L	<1000	<1000	0.0	20

ESE BATCH : G28499

Environmental Science and Engineering Analytical Services
Computer QC Checks

Batch No.: G28499 Analysis Date: 06/05/92 Analyst: ELIZABETH KENNELLEY

	Yes	"Exceptions" No	Comment / Corrective Action
Analysis holding time within criteria?	X		
Extract holding time within criteria?	X		
No. of calibration standards present acceptable?	X		
Curve correlation coefficient >= 0.995?	X		
Calibration curve y-intercept < curve detection limit?	X		
Sample responses within highest standard response?	X		
Method blank present?	X		
Method blank within acceptance criteria?	X		
Standard matrix spike present?	X		
Standard matrix spike within acceptance criteria?	X		
Sample matrix spike present?	X		
Sample matrix spike within acceptance criteria?	X		
Sample matrix spike duplicate present?		X	_____
Sample matrix spike duplicate within acceptance criteria?			

Note: Any "NO" answer requires a comment.

OVERRIDE COMMENTS

PROB:SAMPLE MATRIX SPIKE DUPLICATE
NOT PRESENT.
EXPL:NOT REQUIRED BY CLP PROTOCOL.EK/6/18/92
MS/RP ANALYZED/JMHE

ESE BATCH : G29187
CLASSIFICATION : HEXAVALENT CHROMIUM - SW7196

STATUS : FINAL

METHOD BLANK CORRECTION METHOD : NONE

FIELD GRP	PROJECT NUMBER	PROJECT NAME	LAB COORDINATOR
ALW2B	3914042 0201	JMM/ALAMEDA NASCTO-121	JACKIE HARGROVE-ELLI

SAMPLE CODE	CLIENT ID	DATE ANALYZED	TIME ANALYZED
ALW2B*26	B-05HW-01		
ALW2B*27	B-05BS-01		

Initial Calibration Blank Summary

DATE	SAMPLE	STORET	PARAMETER	UNITS	FOUND
06/16/92	ICB*QC*1	1032*1	CHROMIUM,(+6)	UG/L	ND

Continuing Calibration Blank Sample Summary

DATE	SAMPLE	STORET	PARAMETER	UNITS	FOUND
06/16/92	CCB*QC*1	1032*1	CHROMIUM,(+6)	UG/L	ND

Initial Calibration Verification Sample Summary

DATE	SAMPLE	STORET	PARAMETER	UNITS	TARGET	FOUND	%RECV	RECV CRIT
06/16/92	ICV*QC*1	1032*1	CHROMIUM,(+6)	UG/L	50.0	50.7	101	80-120

Continuing Calibration Verification Sample Summary

DATE	SAMPLE	STORET	PARAMETER	UNITS	TARGET	FOUND	%RECV	RECV CRIT
06/16/92	CCV*QC*1	1032*1	CHROMIUM,(+6)	UG/L	50.0	50.0	100.0	80-120

Method Blank Sample Summary

DATE	SAMPLE	STORET	PARAMETER	UNITS	FOUND
06/16/92	MB*QC*1	1032*1	CHROMIUM,(+6)	UG/L	ND

Standard Matrix Spike Recovery Summary

DATE	SAMPLE	STORET	PARAMETER	%RECV	RECV CRIT	UNITS	TARGET	FOUND
06/16/92	SP*QC*1	1032*1	CHROMIUM,(+6)	101.4	83-113	UG/L	50.0	50.7

Sample Matrix Spike Recovery Summary

DATE	SAMPLE	STORET	PARAMETER	%RECV	RECV CRIT	UNSPIKED	UNITS	TARGET	FOUND	RPD
06/16/92	SPM*ALW2B*26	1032*1	CHROMIUM,(+6)	80.8	83-113	49.2	UG/L	2500	2020	

Replicate Analysis Sample Summary

DATE	SAMPLE	STORET	PARAMETER	UNITS	REP #1	REP #2	RPD	RPD CRIT
06/16/92	RP*ALW2B*26	1032*1	CHROMIUM,(+6)	UG/L	<100.0	<100.0	0.0	20

ESE BATCH : G29187

Environmental Science and Engineering Analytical Services
Computer QC Checks

Batch No.: G29187 Analysis Date: 06/16/92 Analyst: ELIZABETH KENNELLEY

	Yes	"Exceptions" No	Comment / Corrective Action
Analysis holding time within criteria?	X		
Extract holding time within criteria?	X		
No. of calibration standards present acceptable?	X		
Curve correlation coefficient >= 0.995?	X		
Calibration curve y-intercept < curve detection limit?	X		
Sample responses within highest standard response?	X		
Method blank present?	X		
Method blank within acceptance criteria?	X		
Standard matrix spike present?	X		
Standard matrix spike within acceptance criteria?	X		
Sample matrix spike present?	X		
Sample matrix spike within acceptance criteria?		X	1032*1
Sample matrix spike duplicate present?		X	
Sample matrix spike duplicate within acceptance criteria?			

Note: Any "NO" answer requires a comment.

OVERRIDE COMMENTS

PROB:SAMPLE MATRIX SPIKE NOT WITHIN
ACCEPTANCE CRITERIA.
EXPL:POSSIBLE MATRIX INTERFERENCE
OR DILUTION FACTOR ERROR.

PROB:SAMPLE MATRIX SPIKE DUPLICATE
NOT PRESENT.
EXPL:CLP PROTOCOL USED- RP RUN IN
PLACE OF SPM2./EK/6/29/92

Cyanide

ESE BATCH : G29034
CLASSIFICATION : CYANIDE - CLP SOW 3/90

STATUS : FINAL

METHOD BLANK CORRECTION METHOD : NONE

FIELD GRP	PROJECT NUMBER	PROJECT NAME	LAB COORDINATOR
ALW2B	3914042 0201	JMM/ALAMEDA NASCTO-121	JACKIE HARGROVE-ELLI

SAMPLE CODE	CLIENT ID	DATE ANALYZED	TIME ANALYZED
ALW2B*12	EB3		
ALW2B*24	B-05WT-01		
ALW2B*25	B-05WT-02		
ALW2B*13	B-05PS-01		
ALW2B*23	B-05PS-DUP		
ALW2B*15	B-05PS-03		
ALW2B*14	B-05PS-02		
ALW2B*16	B-05PS-04		
ALW2B*17	B-05PS-05		

Initial Calibration Blank Summary

DATE	SAMPLE	STORET	PARAMETER	UNITS	FOUND
06/17/92	ICB*QC*1	99315*CLP90	CYANIDE	UG/L	0.1

Continuing Calibration Blank Sample Summary

DATE	SAMPLE	STORET	PARAMETER	UNITS	FOUND
06/17/92	CCB*QC*1	99315*CLP90	CYANIDE	UG/L	0.6
06/17/92	CCB*QC*2	99315*CLP90	CYANIDE	UG/L	0.1
06/17/92	CCB*QC*3	99315*CLP90	CYANIDE	UG/L	0.1

Initial Calibration Verification Sample Summary

DATE	SAMPLE	STORET	PARAMETER	UNITS	TARGET	FOUND	%RECV	RECV CRIT
06/17/92	ICV*QC*1	99315*CLP90	CYANIDE	UG/L	48.1	46.3	96.3	85-115

Continuing Calibration Verification Sample Summary

DATE	SAMPLE	STORET	PARAMETER	UNITS	TARGET	FOUND	%RECV	RECV CRIT
06/17/92	CCV*QC*1	99315*CLP90	CYANIDE	UG/L	50.0	46.3	92.6	85-115
06/17/92	CCV*QC*2	99315*CLP90	CYANIDE	UG/L	48.1	46.3	96.3	85-115
06/17/92	CCV*QC*3	99315*CLP90	CYANIDE	UG/L	48.1	45.7	95.0	85-115

Method Blank Sample Summary

DATE	SAMPLE	STORET	PARAMETER	UNITS	FOUND
06/17/92	MB*QC*1	99315*CLP90	CYANIDE	UG/L	0.3

Laboratory Control Sample Summary

DATE	SAMPLE	STORET	PARAMETER	%RECV	RECV CRIT	UNITS	TARGET	FOUND
06/17/92	LCS*SP*1	99315*CLP90	CYANIDE	103.2	80-120	UG/L	500	516

Sample Matrix Spike Recovery Summary

DATE	SAMPLE	STORET	PARAMETER	%RECV	RECV CRIT	UNSPIKED	UNITS	TARGET	FOUND	RPD
06/17/92	SPMI*ALW2B*23	99315*CLP90	CYANIDE	128.8	75-125	166	UG/L	96.3	124	

ESE BATCH : G29034

Environmental Science and Engineering Analytical Services
Computer QC Checks

Batch No.: G29034 Analysis Date: 06/17/92 Analyst: ELIZABETH KENNELLEY

	Yes	"Exceptions" No	Comment / Corrective Action
Analysis holding time within criteria?	X		
Extract holding time within criteria?	X		
No. of calibration standards present acceptable?	X		
Curve correlation coefficient >= 0.995?	X		
Calibration curve y-intercept < curve detection limit?	X		
Sample responses within highest standard response?	X		
ICB present?	X		
ICB within acceptance criteria?	X		
CCB present?	X		
CCB within acceptance criteria?	X		
ICV present?	X		
ICV within acceptance criteria?	X		
CCV present?	X		
CCV within acceptance criteria?	X		
Method blank present?	X		
Method blank within acceptance criteria?	X		
LCS present?	X		
LCS within acceptance criteria?	X		
Sample matrix spike present?	X		
Sample matrix spike within acceptance criteria?		X	99315*CLP9
Sample replicate present?		X	----------
Sample replicate within acceptance criteria?			

Note: Any "NO" answer requires a comment.

OVERRIDE COMMENTS

PROB:SAMPLE REPLICATE NOT PRESENT.
EXPL:NOT ENOUGH SAMPLE PROVIDED.
PROB:SAMPLE MATRIX SPIKE NOT WITHIN
ACCEPTANCE CRITERIA.
EXPL:LCS AND CALIBRATION CHECKS ARE WITHIN CRITERIA.
SLIGHTLY ELEVATED %RECOVERY FOR MS MAY BE DUE TO MATRIX./JMHE

ESE BATCH : G29243
CLASSIFICATION : CYANIDE - CLP SOW 3/90

STATUS : FINAL

METHOD BLANK CORRECTION METHOD : NONE

FIELD GRP	PROJECT NUMBER	PROJECT NAME	LAB COORDINATOR
ALW2B	3914042 0201	JMM/ALAMEDA NASCTO-121	JACKIE HARGROVE-ELLI

SAMPLE CODE	CLIENT ID	DATE ANALYZED	TIME ANALYZED
ALW2B*1	M-BG1-GW		
ALW2B*2	M-BG2-GW		
ALW2B*3	M-BG3-GW		
ALW2B*4	M-BG4-GW		
ALW2B*5	M-BG-DUP1		
ALW2B*10	EB1		
ALW2B*11	EB2		
ALW2B*26	B-05HW-01		
ALW2B*27	B-05BS-01		

Initial Calibration Blank Summary

DATE	SAMPLE	STORET	PARAMETER	UNITS	FOUND
06/24/92	ICB*QC*1	99315*CLP90	CYANIDE	UG/L	ND

Continuing Calibration Blank Sample Summary

DATE	SAMPLE	STORET	PARAMETER	UNITS	FOUND
06/24/92	CCB*QC*1	99315*CLP90	CYANIDE	UG/L	ND
06/24/92	CCB*QC*2	99315*CLP90	CYANIDE	UG/L	ND

Initial Calibration Verification Sample Summary

DATE	SAMPLE	STORET	PARAMETER	UNITS	TARGET	FOUND	%RECV	RECV CRIT
06/24/92	ICV*QC*1	99315*CLP90	CYANIDE	UG/L	48.1	45.6	94.8	85-115

Continuing Calibration Verification Sample Summary

DATE	SAMPLE	STORET	PARAMETER	UNITS	TARGET	FOUND	%RECV	RECV CRIT
06/24/92	CCV*QC*1	99315*CLP90	CYANIDE	UG/L	48.1	48.8	101	85-115
06/24/92	CCV*QC*2	99315*CLP90	CYANIDE	UG/L	48.1	47.2	98.1	85-115

Method Blank Sample Summary

DATE	SAMPLE	STORET	PARAMETER	UNITS	FOUND
06/24/92	MB*PBW*1	99315*CLP90	CYANIDE	UG/L	ND

Laboratory Control Sample Summary

DATE	SAMPLE	STORET	PARAMETER	%RECV	RECV CRIT	UNITS	TARGET	FOUND
06/24/92	LCS*SP*1	99315*CLP90	CYANIDE	97.6	80-120	UG/L	500	488

Sample Matrix Spike Recovery Summary

DATE	SAMPLE	STORET	PARAMETER	%RECV	RECV CRIT	UNSPIKED	UNITS	TARGET	FOUND	RPD
06/24/92	SPM*ALW2B*5	99315*CLP90	CYANIDE	96.7	75-125	15.7	UG/L	120	116	

ESE BATCH : G29243

Environmental Science and Engineering Analytical Services

Computer QC Checks

Batch No.: G29243 Analysis Date: 06/24/92 Analyst: ELIZABETH KENNELLEY

	Yes	"Exceptions" No	Comment / Corrective Action
Analysis holding time within criteria?	X		
Extract holding time within criteria?	X		
No. of calibration standards present acceptable?	X		
Curve correlation coefficient >= 0.995?	X		
Calibration curve y-intercept < curve detection limit?	X		
Sample responses within highest standard response?	X		
ICB present?	X		
ICB within acceptance criteria?	X		
CCB present?	X		
CCB within acceptance criteria?	X		
ICV present?	X		
ICV within acceptance criteria?	X		
CCV present?	X		
CCV within acceptance criteria?	X		
Method blank present?	X		
Method blank within acceptance criteria?	X		
LCS present?	X		
LCS within acceptance criteria?	X		
Sample matrix spike present?	X		
Sample matrix spike within acceptance criteria?	X		
Sample replicate present?		X	----------
Sample replicate within acceptance criteria?			

Note: Any "NO" answer requires a comment.

OVERRIDE COMMENTS

PROB: SAMPLE REPLICATE NOT PRESENT.
EXPL: NOT ENOUGH SAMPLE PROVIDED. / EK 06-30-92

TOTAL ORGANIC CARBON

ESE BATCH : G29516
CLASSIFICATION : TOTAL ORGANIC CARBON - E415.1

STATUS : FINAL

METHOD BLANK CORRECTION METHOD : NONE

FIELD GRP	QC TYPE	PROJECT NUMBER	PROJECT NAME	LAB COORDINATOR
ALW28	FDER/CLP1	3914042 0201	JHH/ALAMEDA NASCTO-121	JACKIE HARGROVE-ELLI

SAMPLE CODE	CLIENT ID	DATE ANALYZED	TIME ANALYZED
ALW28*1	M-BG1-GW		
ALW28*2	M-BG2-GW		
ALW28*3	M-BG3-GW		
ALW28*4	M-BG4-GW		
ALW28*10	EB1		
ALW28*11	EB2		

Continuing Calibration Blank Sample Summary

DATE	SAMPLE	STORET	PARAMETER	UNITS	FOUND
07/09/92	CCB*QC*1	680*1	CARBON,TOC	MG/L	ND

Continuing Calibration Verification Sample Summary

DATE	SAMPLE	STORET	PARAMETER	UNITS	TARGET	FOUND	%RECV	RECV CRIT
07/09/92	CCV*QC*1	680*1	CARBON,TOC	MG/L	20.0	21.7	109	90-120

Method Blank Sample Summary

DATE	SAMPLE	STORET	PARAMETER	UNITS	FOUND
07/09/92	MB*QC*1	680*1	CARBON,TOC	MG/L	ND

Standard Matrix Spike Recovery Summary

DATE	SAMPLE	STORET	PARAMETER	%RECV	RECV CRIT	UNITS	TARGET	FOUND
07/09/92	SP1*QC*1	680*1	CARBON,TOC	96.5	87-113	MG/L	20.0	19.3
07/09/92	SP2*QC*1	680*1	CARBON,TOC	94.5	87-113	MG/L	20.0	18.9

Sample Matrix Spike Recovery Summary

ATE	SAMPLE	STORET	PARAMETER	%RECV	RECV CRIT	UNSPIKED	UNITS	TARGET	FOUND	RPD
7/09/92	SPM1*ALW28*3	680*1	CARBON,TOC	32.5	87-113	51.2	MG/L	20.0	6.5	
07/09/92	SPM2*ALW28*3	680*1	CARBON,TOC	36.0	87-113	51.2	MG/L	20.0	7.2	10.2

ESE BATCH : 029516

Environmental Science and Engineering Analytical Services
Computer QC Checks

Batch No.: G29516 Analysis Date: 07/09/92 Analyst: DEBRA MAYES

	Yes	"Exceptions" No	Comment / Corrective Action
Analysis holding time within criteria?	X		
Extract holding time within criteria?	X		
No. of calibration standards present acceptable?	X		
Curve correlation coefficient >= 0.995?	X		
Calibration curve y-intercept < curve detection limit?	X		
Sample responses within highest standard response?	X		
Method blank present?	X		
Method blank within acceptance criteria?	X		
Standard matrix spike present?	X		
Standard matrix spike within acceptance criteria?	X		
Sample matrix spike present?	X		
Sample matrix spike within acceptance criteria?		X	600*1
Sample matrix spike duplicate present?	X		
Sample matrix spike duplicate within acceptance criteria?		X	600*1

Note: Any "NO" answer requires a comment.

OVERRIDE COMMENTS

PROB: SAMPLE MATRIX SPIKE NOT WITHIN ACCEPTANCE CRITERIA.
PROB: SAMPLE MATRIX SPIKE DUP NOT WITHIN ACCEPTANCE CRITERIA.
EXPL: METHOD IN CONTROL. SEE MB,SP & CCV'S. POSSIBLE MATRIX PROBLEM. / KKA 07-10-92

APPENDIX E

SOURCE AND ALHAMBRA WATER RESULTS

SOURCE SAMPLE RESULTS

Environmental Science & Engineering DATE 05/14/91 STATUS: FINAL
PROJECT NUMBER 3914042 0201 PROJECT NAME JMM/ALAMEDA NAS
FIELD GROUP ALDECON PROJECT MANAGER J.M. HARGROVE

SAMPLE ID'S PARAMETERS UNITS	STORET METHOD	DECON ALDECON 1	DECON ALDECON 2
DATE		04/25/91	04/30/91
TIME		14:50	16:25
PH,FIELD	400	8.90	NRQ
STD UNITS	0		
SP.COND.,FIELD@25C	94	140	NRQ
UMHOS/CM	0		
WATER TEMP	10		NRQ
C	0		
ALDRIN	39330	<0.050	NRQ
UG/L	CLP		
BHC,A	39337	<0.025	NRQ
UG/L	CLP		
BHC,B	39338	<0.050	NRQ
UG/L	CLP		
BHC,D	34259	<0.050	NRQ
UG/L	CLP		
BHC,G(LINDANE)	39340	<0.025	NRQ
UG/L	CLP		
DDD,PP'	39310	<0.100	NRQ
UG/L	CLP		
DDE,PP'	39320	<0.050	NRQ
UG/L	CLP		
DDT,PP'	39300	<0.100	NRQ
UG/L	CLP		
DIELDRIN	39380	<0.050	NRQ
UG/L	CLP		
ENDOSULFAN,A	34361	<0.050	NRQ
UG/L	CLP		
ENDOSULFAN,B	34356	<0.100	NRQ
UG/L	CLP		
ENDOSULFAN SULFATE	34351	<0.100	NRQ
UG/L	CLP		
ENDRIN	39390	<0.050	NRQ
UG/L	CLP		
2-METHYL PHENOL	99073	<2.0	NRQ
UG/L	CLP		
BIS(2-CHL'ISOPROPYL)	34283	<1.0	NRQ
ETHER UG/L	CLP		
4-METHYL PHENOL	99074	<2.0	NRQ
UG/L	CLP		
ENDRIN KETONE	78008	<0.100	NRQ
UG/L	CLP		
ALPHA-CHLORDANE	39348	<0.050	NRQ
UG/L	CLP		
GAMMMA-CHLORDANE	39810	<0.050	NRQ
UG/L	CLP		
HEPTACHLOR	39410	<0.050	NRQ
UG/L	CLP		

Environmental Science & Engineering DATE 05/14/91 STATUS: FINAL
PROJECT NUMBER 3914042 0201 PROJECT NAME JMM/ALAMEDA NAS
FIELD GROUP ALDECON PROJECT MANAGER J.M. HARGROVE

SAMPLE ID'S PARAMETERS UNITS	STORET METHOD	DECON ALDECON 1	DECON ALDECON 2
DATE		04/25/91	04/30/91
TIME		14:50	16:25
HEPTACHLOR EPOXIDE UG/L	39420 CLP	<0.050	NRQ
METHOXYCHLOR UG/L	39480 CLP	<0.500	NRQ
TOXAPHENE UG/L	39400 CLP	<1.00	NRQ
PCB-1016 UG/L	34671 CLP	<0.500	NRQ
PCB-1221 UG/L	39488 CLP	<0.500	NRQ
PCB-1232 UG/L	39492 CLP	<0.500	NRQ
PCB-1242 UG/L	39496 CLP	<0.500	NRQ
PCB 1248 UG/L	39500 CLP	<0.500	NRQ
PCB-1254 UG/L	39504 CLP	<0.500	NRQ
PCB-1260 UG/L	39508 CLP	<0.500	NRQ
ACETONE UG/L	81552 CLP	NA	<10.0
BENZENE UG/L	34030 CLP	NA	<5.0
BROMODICHLOROMETHANE UG/L	32101 CLP	NA	<5.0
BROMOFORM UG/L	32104 CLP	NA	<5.0
BROMOMETHANE UG/L	34413 CLP	NA	<10.0
CARBON DISULFIDE UG/L	77041 CLP	NA	<5.0
CARBON TETRACHLORIDE UG/L	32102 CLP	NA	<5.0
CHLOROBENZENE UG/L	34301 CLP	NA	<5.0
CHLOROETHANE UG/L	34311 CLP	NA	<10.0
CHLOROFORM UG/L	32106 CLP	NA	34
CHLOROMETHANE UG/L	34418 CLP	NA	<10.0
DIBROMOCHLOROMETHANE UG/L	32105 CLP	NA	<5.0
1,1-DICHLOROETHANE UG/L	34496 CLP	NA	<5.0

Environmental Science & Engineering DATE 05/14/91 STATUS: FINAL
PROJECT NUMBER 3914042 0201 PROJECT NAME JMM/ALAMEDA NAS
FIELD GROUP ALDECON PROJECT MANAGER J.M. HARGROVE

0004

SAMPLE ID'S PARAMETERS UNITS	STORET METHOD	DECON ALDECON 1	DECON ALDECON 2
DATE		04/25/91	04/30/91
TIME		14:50	16:25
1,2-DICHLOROETHANE UG/L	34531 CLP	NA	<5.0
1,1-DICHLOROETHYLENE UG/L	34501 CLP	NA	<5.0
TRANS-1,2-DICHLORO ETHENE UG/L	34546 CLP	NA	<5.0
1,2-DICHLOROPROPANE UG/L	34541 CLP	NA	<5.0
CIS-1,3-DICHLORO PROPENE UG/L	34704 CLP	NA	<5.0
TRANS-1,3-DICHLORO PROPENE UG/L	34699 CLP	NA	<5.0
ETHYLBENZENE UG/L	34371 CLP	NA	<5.0
2-HEXANONE UG/L	77103 CLP	NA	<10.0
METHYLENE CHLORIDE UG/L	34423 CLP	NA	<5.0
METHYL ETHYL KETONE UG/L	81595 CLP	NA	<10.0
METHYL ISOBUT'KETONE UG/L	81596 CLP	NA	<10.0
STYRENE UG/L	77128 CLP	NA	<5.0
1,1,2,2-TETRACHLORO ETHANE UG/L	34516 CLP	NA	<5.0
TETRACHLOROETHENE UG/L	34475 CLP	NA	<5.0
TOLUENE UG/L	34010 CLP	NA	<5.0
1,1,1-TRICHL'ETHANE UG/L	34506 CLP	NA	<5.0
1,1,2-TRICHL'ETHANE UG/L	34511 CLP	NA	<5.0
TRICHLOROETHENE UG/L	39180 CLP	NA	<5.0
VINYL CHLORIDE UG/L	39175 CLP	NA	<10.0
VINYL ACETATE UG/L	77057 CLP	NA	<10.0
XYLENES,TOTAL UG/L	81551 CLP	NA	<5.0
ACENAPHTHENE UG/L	34205 CLP	<1.0	NRQ
ACENAPHTHYLENE UG/L	34200 CLP	<1.0	NRQ

SAMPLE ID'S PARAMETERS UNITS	STORET METHOD	DECON ALDECON 1	DECON ALDECON 2
DATE		04/25/91	04/30/91
TIME		14:50	16:25
ANTHRACENE UG/L	34220 CLP	<1.0	NRQ
BENZO(A)ANTHRACENE UG/L	34526 CLP	<1.0	NRQ
BENZO(B)FLUORANTHENE UG/L	34230 CLP	<1.5	NRQ
BENZO(K)FLUORANTHENE UG/L	34242 CLP	<1.5	NRQ
BENZO(A)PYRENE UG/L	34247 CLP	<2.0	NRQ
BENZO(GHI)PERYLENE UG/L	34521 CLP	<2.5	NRQ
BUTYLBENZYLPHTHALATE UG/L	34292 CLP	<1.5	NRQ
BIS(2-CHLOROETHYL) ETHER UG/L	34273 CLP	<1.5	NRQ
BIS(2-CHLOROETHOXY) METHANE UG/L	34278 CLP	<1.0	NRQ
BIS(2-ETHYLHEXYL) PHTHALATE UG/L	39100 CLP	2.2	NRQ
4-BROMOPHENYLPHENYL ETHER UG/L	34636 CLP	<1.0	NRQ
2-CHLORONAPHTHALENE UG/L	34581 CLP	<1.0	NRQ
2-CHLOROPHENOL UG/L	34586 CLP	<2.0	NRQ
4-CHLORO-3-METHYL PHENOL UG/L	34452 CLP	<1.5	NRQ
4-CHLOROPHENYLPHENYL ETHER UG/L	34641 CLP	<1.0	NRQ
CHRYSENE UG/L	34320 CLP	<2.5	NRQ
DIBEN'(A,H)ANTH'CENE UG/L	34556 CLP	<2.5	NRQ
DI-N-BUTYLPHTHALATE UG/L	39110 CLP	<1.0	NRQ
1,3,DICHLOROBENZENE UG/L	34566 CLP	<1.0	NRQ
1,2-DICHLOROBENZENE UG/L	34536 CLP	<1.0	NRQ
1,4-DICHLOROBENZENE UG/L	34571 CLP	<1.0	NRQ
3,3'-DICHL'BENZIDINE UG/L	34631 CLP	<5.0	NRQ
2,4-DICHLOROPHENOL UG/L	34601 CLP	<2.0	NRQ

Environmental Science & Engineering DATE 05/14/91 STATUS: FINAL
PROJECT NUMBER 3914042 0201 PROJECT NAME JMM/ALAMEDA NAS
FIELD GROUP ALDECON PROJECT MANAGER J.M. HARGROVE

SAMPLE ID'S PARAMETERS UNITS	STORET METHOD	DECON ALDECON 1	DECON ALDECON 2
DATE		04/25/91	04/30/91
TIME		14:50	16:25
DIETHYLPHTHALATE UG/L	34336 CLP	<1.0	NRQ
2,4-DIMETHYLPHENOL UG/L	34606 CLP	<2.0	NRQ
DIMETHYLPTHALATE UG/L	34341 CLP	<2.0	NRQ
2,4-DINITROPHENOL UG/L	34616 CLP	<30	NRQ
2,4-DINITROTOLUENE UG/L	34611 CLP	<2.0	NRQ
2,6-DINITROTOLUENE UG/L	34626 CLP	<2.0	NRQ
DI-N-OCTYLPHTHALATE UG/L	34596 CLP	<2.4	NRQ
FLUORANTHENE UG/L	34376 CLP	<1.0	NRQ
FLUORENE UG/L	34381 CLP	<1.0	NRQ
HEXACHLOROBENZENE UG/L	39700 CLP	<2.0	NRQ
HEXACHLOROBUTADIENE UG/L	34391 CLP	<2.0	NRQ
HEXACHLOROCYCLOPENTA DIENE UG/L	34386 CLP	<2.0	NRQ
HEXACHLOROETHANE UG/L	34396 CLP	<1.5	NRQ
INDENO(1,2,3-CD) PYRENE UG/L	34403 CLP	<2.5	NRQ
ISOPHORONE UG/L	34408 CLP	<1.0	NRQ
2-METHYL-4,6-DINITRO PHENOL UG/L	34657 CLP	<20	NRQ
NAPHTHALENE UG/L	34696 CLP	<1.0	NRQ
NITROBENZENE UG/L	34447 CLP	<1.0	NRQ
2-NITROPHENOL UG/L	34591 CLP	<2.0	NRQ
4-NITROPHENOL UG/L	34646 CLP	<10.0	NRQ
N-NITROSODI-N-PROPYL AMINE UG/L	34428 CLP	<1.0	NRQ
N-NITROSODIPHE'AMINE UG/L	34433 CLP	<1.0	NRQ
PENTACHLOROPHENOL UG/L	39032 CLP	<10.0	NRQ

Environmental Science & Engineering DATE 05/14/91 STATUS: FINAL
PROJECT NUMBER 3914042 0201 PROJECT NAME JMM/ALAMEDA NAS
FIELD GROUP ALDECON PROJECT MANAGER J.M. HARGROVE

SAMPLE ID'S PARAMETERS UNITS	STORET METHOD	DECON ALDECON 1	DECON ALDECON 2
DATE		04/25/91	04/30/91
TIME		14:50	16:25
PHENANTHRENE	34461	<1.0	NRQ
UG/L	CLP		
PHENOL	34694	<2.0	NRQ
UG/L	CLP		
PYRENE	34469	<1.0	NRQ
UG/L	CLP		
1,2,4-TRICH'BENZENE	34551	<1.0	NRQ
UG/L	CLP		
2,4,6-TRICHL'PHENOL	34621	<4.5	NRQ
UG/L	CLP		
BENZYL ALCOHOL	77147	<2.00	NRQ
UG/L	CLP		
BENZOIC ACID	77247	<2.50	NRQ
UG/L	CLP		
4-CHLOROANILINE	99075	<2.00	NRQ
UG/L	CLP		
2-NITROANILINE	99077	<2.00	NRQ
UG/L	CLP		
3-NITROANILINE	99078	<1.00	NRQ
UG/L	CLP		
4-NITROANILINE	99079	<2.00	NRQ
UG/L	CLP		
2-METHLYNAPHTHALENE	77416	<1.0	NRQ
UG/L	CLP		
2,4,5-TRICHL'PHENOL	77687	<3	NRQ
UG/L	CLP		
DIBENZOFURAN	81302	<1.00	NRQ
UG/L	CLP		
ALUMINUM,TOTAL	1105	75.7	NRQ
UG/L	CLP		
ANTIMONY,TOTAL	1097	<40.0	NRQ
UG/L	CLP		
ARSENIC,TOTAL	1002	<2.6	NRQ
UG/L	CLP		
BARIUM,TOTAL	1007	9.8	NRQ
UG/L	CLP		
BERYLLIUM, TOTAL	1012	<1.3	NRQ
UG/L	CLP		
CADMIUM,TOTAL	1027	<3.0	NRQ
UG/L	CLP		
CALCIUM,TOTAL	82032	10200	NRQ
UG/L	CLP		
CHROMIUM,TOTAL	1034	<5.7	NRQ
UG/L	CLP		
COBALT,TOTAL	1037	<10.0	NRQ
UG/L	CLP		

Environmental Science & Engineering DATE 05/14/91 STATUS: FINAL
PROJECT NUMBER 3914042 0201 PROJECT NAME JMM/ALAMEDA NAS
FIELD GROUP ALDECON PROJECT MANAGER J.M. HARGROVE

SAMPLE ID'S PARAMETERS UNITS	STORET METHOD	DECON ALDECON 1	DECON ALDECON 2
DATE		04/25/91	04/30/91
TIME		14:50	16:25
COPPER,TOTAL	1042	<5.8	NRQ
UG/L	CLP		
IRON,TOTAL	1045	555	NRQ
UG/L	CLP		
LEAD,TOTAL	1051	2.2	NRQ
UG/L	CLP		
MAGNESIUM,TOTAL	927	911	NRQ
UG/L	CLP		
MANGANESE,TOTAL	1055	30.6	NRQ
UG/L	CLP		
MERCURY,TOTAL	71900	<0.2	NRQ
UG/L	CLP		
NICKEL,TOTAL	1067	<14.0	NRQ
UG/L	CLP		
POTASSIUM,TOTAL	82034	1050	NRQ
UG/L	CLP		
SELENIUM,TOTAL	1147	<2.1	NRQ
UG/L	CLP		
SILVER,TOTAL	1077	<4.9	NRQ
UG/L	CLP		
SODIUM,TOTAL	82035	3110	NRQ
UG/L	CLP		
THALLIUM,TOTAL	1059	<2.7	NRQ
UG/L	CLP		
VANADIUM,TOTAL	1087	<5.4	NRQ
UG/L	CLP		
ZINC,TOTAL	1092	16.2	NRQ
UG/L	CLP		
CYANIDE	99315	<2.5	NRQ
UG/L	CLP		
ALPHA,GROSS	1501	0.3	NRQ
PC/L	R		
ALPHA,GR.,CT.ERROR	1502	0.9	NRQ
+/-PC/L	R		
BETA,GROSS	3501	<0.3	NRQ
PC/L	R		
BETA,GR.,CT.ERROR	3502	1.6	NRQ
+/-PC/L	R		
RADIUM 226	9501	0.1	NRQ
PC/L	R		
RADIUM 226,CT.ERROR	9502	0.07	NRQ
+/-PC/L	R		
RADIUM 228	11501	<0.3	NRQ
PC/L	R		
RADIUM 228,CT.ERROR	11502	1.5	NRQ
+/-PC/L	R		

Environmental Science & Engineering DATE 05/14/91 STATUS: FINAL
PROJECT NUMBER 3914042 0201 PROJECT NAME JMM/ALAMEDA NAS
FIELD GROUP ALDECON PROJECT MANAGER J.M. HARGROVE

SAMPLE ID'S PARAMETERS UNITS	STORET METHOD	DECON ALDECON 1	DECON ALDECON 2
DATE		04/25/91	04/30/91
TIME		14:50	16:25
RESIDUE,DISS	70300	56	NRQ
MG/L	I		

GFAAMetals: As, Pb, Se, & Tl

ESE BATCH : G28986
CLASSIFICATION : ARSENIC - CLP SOW 3/90

STATUS : FINAL

METHOD BLANK CORRECTION METHOD : NONE

FIELD GRP	PROJECT NUMBER	PROJECT NAME	LAB COORDINATOR
ALW2B	3914042 0201	JMM/ALAMEDA NASCTO-121	JACKIE HARGROVE-ELLI

SAMPLE CODE	CLIENT ID	DATE ANALYZED	TIME ANALYZED
ALW2B*1	M-BG1-GW		
ALW2B*2	M-BG2-GW		
ALW2B*3	M-BG3-GW		
ALW2B*4	M-BG4-GW		
ALW2B*10	EB1		
ALW2B*11	EB2		
ALW2B*12	EB3		
ALW2B*13	B-05PS-01		
ALW2B*14	B-05PS-02		
ALW2B*15	B-05PS-03	06/25/92	
ALW2B*16	B-05PS-04		
ALW2B*17	B-05PS-05	06/23/92	
ALW2B*23	B-05PS-DUP		
ALW2B*24	B-05WT-01	06/23/92	
ALW2B*25	B-05WT-02		
ALW2B*26	B-05HW-01		
ALW2B*27	B-05BS-01	06/23/92	

ESE BATCH : G28986

Initial Calibration Blank Summary

DATE	SAMPLE	STORET	PARAMETER	UNITS	FOUND
06/22/92	ICB*QC*1	1002*CLP90	ARSENIC,TOTAL	UG/L	ND
06/22/92	ICB*QC*2	1002*CLP90	ARSENIC,TOTAL	UG/L	ND
06/22/92	ICB*QC*3	1002*CLP90	ARSENIC,TOTAL	UG/L	ND
06/22/92	ICB*QC*4	1002*CLP90	ARSENIC,TOTAL	UG/L	1.4

Continuing Calibration Blank Sample Summary

DATE	SAMPLE	STORET	PARAMETER	UNITS	FOUND
06/22/92	CCB*QC*1	1002*CLP90	ARSENIC,TOTAL	UG/L	ND
06/22/92	CCB*QC*2	1002*CLP90	ARSENIC,TOTAL	UG/L	ND
06/22/92	CCB*QC*3	1002*CLP90	ARSENIC,TOTAL	UG/L	ND
06/22/92	CCB*QC*4	1002*CLP90	ARSENIC,TOTAL	UG/L	ND
06/22/92	CCB*QC*5	1002*CLP90	ARSENIC,TOTAL	UG/L	ND
06/22/92	CCB*QC*6	1002*CLP90	ARSENIC,TOTAL	UG/L	0.9
06/22/92	CCB*QC*7	1002*CLP90	ARSENIC,TOTAL	UG/L	ND
06/22/92	CCB*QC*8	1002*CLP90	ARSENIC,TOTAL	UG/L	ND
06/22/92	CCB*QC*9	1002*CLP90	ARSENIC,TOTAL	UG/L	0.7

Initial Calibration Verification Sample Summary

DATE	SAMPLE	STORET	PARAMETER	UNITS	TARGET	FOUND	%RECV	RECV CRIT
06/22/92	ICV*PE PURE*1	1002*CLP90	ARSENIC,TOTAL	UG/L	50.0	51.8	104	90-110
06/22/92	ICV*PE PURE*2	1002*CLP90	ARSENIC,TOTAL	UG/L	50.0	51.1	102	90-110
06/22/92	ICV*PE PURE*3	1002*CLP90	ARSENIC,TOTAL	UG/L	50.0	50.6	101	90-110
06/22/92	ICV*PE PURE*4	1002*CLP90	ARSENIC,TOTAL	UG/L	50.0	49.0	98.0	90-110

Continuing Calibration Verification Sample Summary

DATE	SAMPLE	STORET	PARAMETER	UNITS	TARGET	FOUND	%RECV	RECV CRIT
06/22/92	CCV*QC*1	1002*CLP90	ARSENIC,TOTAL	UG/L	50.0	52.4	105	90-110
06/22/92	CCV*QC*2	1002*CLP90	ARSENIC,TOTAL	UG/L	50.0	52.2	104	90-110
06/22/92	CCV*QC*3	1002*CLP90	ARSENIC,TOTAL	UG/L	50.0	55.0	110	90-110
06/22/92	CCV*QC*4	1002*CLP90	ARSENIC,TOTAL	UG/L	50.0	53.6	107	90-110
06/22/92	CCV*QC*5	1002*CLP90	ARSENIC,TOTAL	UG/L	50.0	54.7	109	90-110
06/22/92	CCV*QC*6	1002*CLP90	ARSENIC,TOTAL	UG/L	50.0	50.7	101	90-110
06/22/92	CCV*QC*7	1002*CLP90	ARSENIC,TOTAL	UG/L	50.0	51.7	103	90-110
06/22/92	CCV*QC*8	1002*CLP90	ARSENIC,TOTAL	UG/L	50.0	53.2	106	90-110
06/22/92	CCV*QC*9	1002*CLP90	ARSENIC,TOTAL	UG/L	50.0	54.4	109	90-110

Laboratory Control Sample Summary

DATE	SAMPLE	STORET	PARAMETER	%RECV	RECV CRIT	UNITS	TARGET	FOUND
06/22/92	LCS*ESE*1	1002*CLP90	ARSENIC,TOTAL	99.0	80-120	UG/L	40.0	39.6

Method Blank Sample Summary

DATE	SAMPLE	STORET	PARAMETER	UNITS	FOUND
06/22/92	MB*QC*1	1002*CLP90	ARSENIC,TOTAL	UG/L	ND

Sample Matrix Spike Recovery Summary

DATE	SAMPLE	STORET	PARAMETER	%RECV	RECV CRIT	UNSPIKED	UNITS	TARGET	FOUND	RPD
06/22/92	SPM1*ALW2B*23	1002*CLP90	ARSENIC,TOTAL	80.0	75-125	2.9	UG/L	40.0	32.0	

Replicate Analysis Sample Summary

DATE	SAMPLE	STORET	PARAMETER	UNITS	REP #1	REP #2	RPD	RPD CRIT
06/22/92	RP*ALW2B*23	1002*CLP90	ARSENIC,TOTAL	UG/L	2.9	3.4	15.9	20

Spike into Matrix Recovery Summary

DATE	SAMPLE	STORET	PARAMETER	%RECV	RECV CRIT	UNITS	TARGET	FOUND
06/22/92	SPX*MB*1	1002*CLP90	ARSENIC,TOTAL	98.6	85-115	UG/L	100.0	98.6
06/22/92	SPX*ESE*1	1002*CLP90	ARSENIC,TOTAL	97.4	85-115	UG/L	100.0	97.4
06/22/92	SPX*ALW2B*1	1002*CLP90	ARSENIC,TOTAL	109.0	85-115	UG/L	100.0	109
06/22/92	SPX*ALW2B*2	1002*CLP90	ARSENIC,TOTAL	99.4	85-115	UG/L	100.0	99.4
06/22/92	SPX*ALW2B*3	1002*CLP90	ARSENIC,TOTAL	105.0	85-115	UG/L	100.0	105
06/22/92	SPX*ALW2B*4	1002*CLP90	ARSENIC,TOTAL	117.0	85-115	UG/L	100.0	117
06/22/92	SPX*ALW2B*10	1002*CLP90	ARSENIC,TOTAL	107.0	85-115	UG/L	100.0	107
06/22/92	SPX*ALW2B*11	1002*CLP90	ARSENIC,TOTAL	115.0	85-115	UG/L	100.0	115
06/22/92	SPX*ALW2B*12	1002*CLP90	ARSENIC,TOTAL	109.0	85-115	UG/L	100.0	109
06/22/92	SPX*ALW2B*13	1002*CLP90	ARSENIC,TOTAL	95.8	85-115	UG/L	100.0	95.8
06/22/92	SPX*ALW2B*14	1002*CLP90	ARSENIC,TOTAL	91.3	85-115	UG/L	100.0	91.3
06/22/92	SPX*ALW2B*15	1002*CLP90	ARSENIC,TOTAL	121.0	85-115	UG/L	100.0	121
06/22/92	SPX*ALW2B*16	1002*CLP90	ARSENIC,TOTAL	101.0	85-115	UG/L	100.0	101
06/22/92	SPX*ALW2B*23	1002*CLP90	ARSENIC,TOTAL	97.1	85-115	UG/L	100.0	97.1
06/22/92	SPX*ALW2BD*23	1002*CLP90	ARSENIC,TOTAL	95.4	85-115	UG/L	100.0	95.4

ESE BATCH : G28986

Spike into Matrix Recovery Summary

DATE	SAMPLE	STORET	PARAMETER	%RECV	RECV CRIT	UNITS	TARGET	FOUND
06/22/92	SPX*ALW2B*25	1002*CLP90	ARSENIC, TOTAL	122.0	85-115	UG/L	100.0	122
06/22/92	SPX*ALW2B*26	1002*CLP90	ARSENIC, TOTAL	119.0	85-115	UG/L	100.0	119

Computer QC Checks

Batch No.: G28986 Analysis Date: 06/22/92 Analyst: PAMELA YOUNG

	Yes	"Exceptions" No	Comment / Corrective Action
Analysis holding time within criteria?	X		
Extract holding time within criteria?	X		
ICB present?	X		
ICB within acceptance criteria?	X		
CCB present?	X		
CCB within acceptance criteria?	X		
ICV present?	X		
ICV within acceptance criteria?	X		
CCV present?	X		
CCV within acceptance criteria?	X		
LCS present?	X		
LCS within acceptance criteria?	X		
Method blank present?	X		
Method blank within acceptance criteria?	X		
Sample matrix spike present?	X		
Sample matrix spike within acceptance criteria?	X		
Sample replicate present?	X		
Sample replicate within acceptance criteria?	X		
Analytical spike present?	X		
Analytical spike within acceptance criteria?		X	1002*CLP90 _____

Note: Any "NO" answer requires a comment.

OVERRIDE COMMENTS

PROB:ANALYTICAL SPIKE NOT WITHIN
ACCEPTANCE CRITERIA.
EXPL:POSSIBLE MATRIX INTERFERENCE.
MFB/6/29/92

SLIGHTLY ELEVATED RECOVERIES FOR SELECTED SAMPLES DO NOT
HAVE SIGNIFICANT IMPACT ON DATA QUALITY./JMHE

ESE BATCH : G29338
CLASSIFICATION : ARSENIC - CLP SOW 3/90

STATUS :

METHOD BLANK CORRECTION METHOD : NONE

FIELD GRP	PROJECT NUMBER	PROJECT NAME	LAB COORDINATOR
ALW2B	3914042 0201	JMM/ALAMEDA NASCTO-121	JACKIE HARGROVE-ELLI

SAMPLE CODE	CLIENT ID	DATE ANALYZED	TIME ANALYZED
ALW2B*5	M-BG-DUP1		

Initial Calibration Blank Summary

DATE	SAMPLE	STORET	PARAMETER	UNITS	FOUND
07/02/92	ICB*QC*1	1002*CLP90	ARSENIC,TOTAL	UG/L	ND

Continuing Calibration Blank Sample Summary

DATE	SAMPLE	STORET	PARAMETER	UNITS	FOUND
07/02/92	CCB*QC*1	1002*CLP90	ARSENIC,TOTAL	UG/L	ND
07/02/92	CCB*QC*2	1002*CLP90	ARSENIC,TOTAL	UG/L	ND
07/02/92	CCB*QC*3	1002*CLP90	ARSENIC,TOTAL	UG/L	ND

Initial Calibration Verification Sample Summary

DATE	SAMPLE	STORET	PARAMETER	UNITS	TARGET	FOUND	%RECV	RECV CRIT
07/02/92	ICV*PE-PURE*1	1002*CLP90	ARSENIC,TOTAL	UG/L	50.0	45.9	91.8	90-110

Continuing Calibration Verification Sample Summary

DATE	SAMPLE	STORET	PARAMETER	UNITS	TARGET	FOUND	%RECV	RECV CRIT
07/02/92	CCV*QC*1	1002*CLP90	ARSENIC,TOTAL	UG/L	50.0	53.8	108	90-110
07/02/92	CCV*QC*2	1002*CLP90	ARSENIC,TOTAL	UG/L	50.0	51.3	103	90-110
07/02/92	CCV*QC*3	1002*CLP90	ARSENIC,TOTAL	UG/L	50.0	50.0	100.0	90-110

Laboratory Control Sample Summary

DATE	SAMPLE	STORET	PARAMETER	%RECV	RECV CRIT	UNITS	TARGET	FOUND
07/02/92	LCS*ESE*1	1002*CLP90	ARSENIC,TOTAL	101.5	80-120	UG/L	40.0	40.6

Method Blank Sample Summary

DATE	SAMPLE	STORET	PARAMETER	UNITS	FOUND
07/02/92	MB*QC*1	1002*CLP90	ARSENIC,TOTAL	UG/L	ND

Sample Matrix Spike Recovery Summary

DATE	SAMPLE	STORET	PARAMETER	%RECV	RECV CRIT	UNSPIKED	UNITS	TARGET	FOUND	RPD
07/02/92	SPMI*ALW2B*5	1002*CLP90	ARSENIC,TOTAL	90.8	75-125	3.9	UG/L	40.0	36.3	

Replicate Analysis Sample Summary

DATE	SAMPLE	STORET	PARAMETER	UNITS	REP #1	REP #2	RPD	RPD CRIT
07/02/92	RP*ALW2B*5	1002*CLP90	ARSENIC,TOTAL	UG/L	3.9	3.7	5.3	20

Spike into Matrix Recovery Summary

DATE	SAMPLE	STORET	PARAMETER	%RECV	RECV CRIT	UNITS	TARGET	FOUND
07/02/92	SPX*MB*1	1002*CLP90	ARSENIC,TOTAL	93.8	85-115	UG/L	100.0	93.8
07/02/92	SPX*ESE*1	1002*CLP90	ARSENIC,TOTAL	96.4	85-115	UG/L	100.0	96.4
07/02/92	SPX*ALW2B*5	1002*CLP90	ARSENIC,TOTAL	116.0	85-115	UG/L	100.0	116
07/02/92	SPX*ALW2BD*5	1002*CLP90	ARSENIC,TOTAL	108.0	85-115	UG/L	100.0	108

ESE BATCH : G29338

Environmental Science and Engineering Analytical Services

Computer QC Checks

Batch No.: G29338 Analysis Date: 07/02/92 Analyst: GEORGE HOUSTON

	Yes	"Exceptions" No	Comment / Corrective Action
Analysis holding time within criteria?	X		
Extract holding time within criteria?	X		
ICB present?	X		
ICB within acceptance criteria?	X		
CCB present?	X		
CCB within acceptance criteria?	X		
ICV present?	X		
ICV within acceptance criteria?	X		
CCV present?	X		
CCV within acceptance criteria?	X		
LCS present?	X		
LCS within acceptance criteria?	X		
Method blank present?	X		
Method blank within acceptance criteria?	X		
Sample matrix spike present?		X	----------
Sample matrix spike within acceptance criteria?			
Sample replicate present?	X		
Sample replicate within acceptance criteria?	X		
Analytical spike present?	X		
Analytical spike within acceptance criteria?		X	1002*CLP90 ----------

Note: Any "NO" answer requires a comment.

OVERRIDE COMMENTS

ESE BATCH : G29118
CLASSIFICATION : LEAD - CLP SOW 3/90

STATUS : FINAL

METHOD BLANK CORRECTION METHOD : NONE

FIELD GRP	PROJECT NUMBER	PROJECT NAME	LAB COORDINATOR
ALW2B	3914042 0201	JMM/ALAMEDA NASCTO-121	JACKIE HARGROVE-ELLI

SAMPLE CODE	CLIENT ID	DATE ANALYZED	TIME ANALYZED
ALW2B*1	M-BG1-GW		
ALW2B*2	M-BG2-GW		
ALW2B*3	M-BG3-GW		
ALW2B*4	M-BG4-GW		
ALW2B*10	EB1		
ALW2B*5	M-BG-DUP1		
ALW2B*11	EB2		
ALW2B*12	EB3		
ALW2B*13	B-05PS-01		
ALW2B*14	B-05PS-02		
ALW2B*15	B-05PS-03		
ALW2B*16	B-05PS-04		
ALW2B*17	B-05PS-05		
ALW2B*23	B-05PS-DUP		
ALW2B*24	B-05WT-01		
ALW2B*25	B-05WT-02		
ALW2B*26	B-05HW-01		
ALW2B*27	B-05BS-01		

ESE BATCH : G29118

Initial Calibration Blank Summary

DATE	SAMPLE	STORET	PARAMETER	UNITS	FOUND
06/24/92	ICB*QC*1	1051*CLP90	LEAD,TOTAL	UG/L	0.1
06/24/92	ICB*QC*2	1051*CLP90	LEAD,TOTAL	UG/L	ND

Continuing Calibration Blank Sample Summary

DATE	SAMPLE	STORET	PARAMETER	UNITS	FOUND
06/24/92	CCB*QC*1	1051*CLP90	LEAD,TOTAL	UG/L	0.1
06/24/92	CCB*QC*2	1051*CLP90	LEAD,TOTAL	UG/L	0.1
06/24/92	CCB*QC*3	1051*CLP90	LEAD,TOTAL	UG/L	0.1
06/24/92	CCB*QC*4	1051*CLP90	LEAD,TOTAL	UG/L	ND
06/24/92	CCB*QC*5	1051*CLP90	LEAD,TOTAL	UG/L	ND
06/24/92	CCB*QC*6	1051*CLP90	LEAD,TOTAL	UG/L	0.1
06/24/92	CCB*QC*7	1051*CLP90	LEAD,TOTAL	UG/L	0.1

Initial Calibration Verification Sample Summary

DATE	SAMPLE	STORET	PARAMETER	UNITS	TARGET	FOUND	%RECV	RECV CRIT
06/24/92	ICV*PE PURE*1	1051*CLP90	LEAD,TOTAL	UG/L	50.0	46.3	92.6	90-110
06/24/92	ICV*PE PURE*2	1051*CLP90	LEAD,TOTAL	UG/L	50.0	48.9	97.8	90-110

Continuing Calibration Verification Sample Summary

DATE	SAMPLE	STORET	PARAMETER	UNITS	TARGET	FOUND	%RECV	RECV CRIT
06/24/92	CCV*QC*1	1051*CLP90	LEAD,TOTAL	UG/L	50.0	49.4	98.8	90-110
06/24/92	CCV*QC*2	1051*CLP90	LEAD,TOTAL	UG/L	50.0	45.6	91.2	90-110
06/24/92	CCV*QC*3	1051*CLP90	LEAD,TOTAL	UG/L	50.0	48.3	96.6	90-110
06/24/92	CCV*QC*4	1051*CLP90	LEAD,TOTAL	UG/L	50.0	53.6	107	90-110
06/24/92	CCV*QC*5	1051*CLP90	LEAD,TOTAL	UG/L	50.0	51.2	102	90-110
06/24/92	CCV*QC*6	1051*CLP90	LEAD,TOTAL	UG/L	50.0	50.7	101	90-110
06/24/92	CCV*QC*7	1051*CLP90	LEAD,TOTAL	UG/L	50.0	52.8	106	90-110

Laboratory Control Sample Summary

DATE	SAMPLE	STORET	PARAMETER	%RECV	RECV CRIT	UNITS	TARGET	FOUND
06/24/92	LCS*ESE*1	1051*CLP90	LEAD,TOTAL	89.0	80-120	UG/L	20.0	17.8

Method Blank Sample Summary

DATE	SAMPLE	STORET	PARAMETER	UNITS	FOUND
06/24/92	MB*QC*1	1051*CLP90	LEAD,TOTAL	UG/L	0.3

Sample Matrix Spike Recovery Summary

DATE	SAMPLE	STORET	PARAMETER	%RECV	RECV CRIT	UNSPIKED	UNITS	TARGET	FOUND	RPD
06/24/92	SPM1*ALW2B*5	1051*CLP90	LEAD,TOTAL	78.0	75-125	0.0	UG/L	20.0	15.6	

Replicate Analysis Sample Summary

DATE	SAMPLE	STORET	PARAMETER	UNITS	REP #1	REP #2	RPD	RPD CRIT
06/24/92	RP*ALW2B*5	1051*CLP90	LEAD,TOTAL	UG/L	<2.0	<2.0	0.0	20

Spike into Matrix Recovery Summary

DATE	SAMPLE	STORET	PARAMETER	%RECV	RECV CRIT	UNITS	TARGET	FOUND
06/24/92	SPX*MB*1	1051*CLP90	LEAD,TOTAL	101.0	85-115	UG/L	100.0	101
06/24/92	SPX*ESE*1	1051*CLP90	LEAD,TOTAL	104.0	85-115	UG/L	100.0	104
06/24/92	SPX*ALW2B*1	1051*CLP90	LEAD,TOTAL	61.8	85-115	UG/L	100.0	61.8
06/24/92	SPX*ALW2B*2	1051*CLP90	LEAD,TOTAL	86.6	85-115	UG/L	100.0	86.6
06/24/92	SPX*ALW2B*3	1051*CLP90	LEAD,TOTAL	92.4	85-115	UG/L	100.0	92.4
06/24/92	SPX*ALW2B*4	1051*CLP90	LEAD,TOTAL	90.2	85-115	UG/L	100.0	90.2
06/24/92	SPX*ALW2B*10	1051*CLP90	LEAD,TOTAL	92.6	85-115	UG/L	100.0	92.6
06/24/92	SPX*ALW2B*5	1051*CLP90	LEAD,TOTAL	90.2	85-115	UG/L	100.0	90.2
06/24/92	SPX*ALW2BD*5	1051*CLP90	LEAD,TOTAL	92.6	85-115	UG/L	100.0	92.6
06/24/92	SPX*ALW2B*11	1051*CLP90	LEAD,TOTAL	97.8	85-115	UG/L	100.0	97.8
06/24/92	SPX*ALW2B*12	1051*CLP90	LEAD,TOTAL	97.2	85-115	UG/L	100.0	97.2
06/24/92	SPX*ALW2B*13	1051*CLP90	LEAD,TOTAL	103.0	85-115	UG/L	100.0	103
06/24/92	SPX*ALW2B*14	1051*CLP90	LEAD,TOTAL	89.6	85-115	UG/L	100.0	89.6
06/24/92	SPX*ALW2B*15	1051*CLP90	LEAD,TOTAL	94.4	85-115	UG/L	100.0	94.4
06/24/92	SPX*ALW2B*16	1051*CLP90	LEAD,TOTAL	87.5	85-115	UG/L	100.0	87.5
06/24/92	SPX*ALW2B*17	1051*CLP90	LEAD,TOTAL	95.4	85-115	UG/L	100.0	95.4
06/24/92	SPX*ALW2B*23	1051*CLP90	LEAD,TOTAL	89.9	85-115	UG/L	100.0	89.9
06/24/92	SPX*ALW2B*24	1051*CLP90	LEAD,TOTAL	104.0	85-115	UG/L	100.0	104
06/24/92	SPX*ALW2B*25	1051*CLP90	LEAD,TOTAL	106.0	85-115	UG/L	100.0	106
06/24/92	SPX*ALW2B*26	1051*CLP90	LEAD,TOTAL	109.0	85-115	UG/L	100.0	109
06/24/92	SPX*ALW2B*27	1051*CLP90	LEAD,TOTAL	94.0	85-115	UG/L	100.0	94.0

ESE BATCH : G29118

Environmental Science and Engineering Analytical Services

Computer QC Checks

Batch No.: G29118 Analysis Date: 06/24/92 Analyst: ELIZABETH CREARY

	Yes	"Exceptions" No	Comment / Corrective Action
Analysis holding time within criteria?	X		
Extract holding time within criteria?	X		
ICB present?	X		
ICB within acceptance criteria?	X		
CCB present?	X		
CCB within acceptance criteria?	X		
ICV present?	X		
ICV within acceptance criteria?	X		
CCV present?	X		
CCV within acceptance criteria?	X		
LCS present?	X		
LCS within acceptance criteria?	X		
Method blank present?	X		
Method blank within acceptance criteria?	X		
Sample matrix spike present?	X		
Sample matrix spike within acceptance criteria?	X		
Sample replicate present?	X		
Sample replicate within acceptance criteria?	X		
Analytical spike present?	X		
Analytical spike within acceptance criteria?		X	1051*CLP90 _____

Note: Any "NO" answer requires a comment.

OVERRIDE COMMENTS

PROB:ANALYTICAL SPIKE NOT WITHIN
ACCEPTANCE CRITERIA.
EXPL:POSSIBLE MATRIX INTERFERENCE.
MFB/6/29/92
ALL OTHER QC IN CONTROL. MAY HAVE SLIGHT NEGATIVE BIAS FOR SAMPLE ALW2B.*1./JMHE

ESE BATCH : G28929
CLASSIFICATION : SELENIUM - CLP SOW 3/90

STATUS : FINAL

METHOD BLANK CORRECTION METHOD : NONE

FIELD GRP	PROJECT NUMBER	PROJECT NAME	LAB COORDINATOR
ALW2B	3914042 0201	JMM/ALAMEDA NASCTO-121	JACKIE HARGROVE-ELLI

SAMPLE CODE	CLIENT ID	DATE ANALYZED	TIME ANALYZED
ALW2B*1	M-BG1-GW		
ALW2B*2	M-BG2-GW		
ALW2B*3	M-BG3-GW		
ALW2B*4	M-BG4-GW		
ALW2B*10	EB1		
ALW2B*11	EB2		
ALW2B*12	EB3		
ALW2B*13	B-05PS-01		
ALW2B*14	B-05PS-02		
ALW2B*15	B-05PS-03		
ALW2B*16	B-05PS-04		
ALW2B*17	B-05PS-05		
ALW2B*23	B-05PS-DUP		
ALW2B*24	B-05WT-01		
ALW2B*25	B-05WT-02		
ALW2B*26	B-05HW-01		
ALW2B*27	B-05BS-01		

ESE BATCH : G28929

Initial Calibration Blank Summary

DATE	SAMPLE	STORET	PARAMETER	UNITS	FOUND
06/19/92	ICB*QC*1	1147*CLP90	SELENIUM,TOTAL	UG/L	0.5
06/19/92	ICB*QC*2	1147*CLP90	SELENIUM,TOTAL	UG/L	0.2

Continuing Calibration Blank Sample Summary

DATE	SAMPLE	STORET	PARAMETER	UNITS	FOUND
06/19/92	CCB*QC*1	1147*CLP90	SELENIUM,TOTAL	UG/L	ND
06/19/92	CCB*QC*2	1147*CLP90	SELENIUM,TOTAL	UG/L	0.2
06/19/92	CCB*QC*3	1147*CLP90	SELENIUM,TOTAL	UG/L	0.3
06/19/92	CCB*QC*4	1147*CLP90	SELENIUM,TOTAL	UG/L	0.2
06/19/92	CCB*QC*5	1147*CLP90	SELENIUM,TOTAL	UG/L	0.5

Initial Calibration Verification Sample Summary

DATE	SAMPLE	STORET	PARAMETER	UNITS	TARGET	FOUND	%RECV	RECV CRIT
06/19/92	ICV*PE-PURE*1	1147*CLP90	SELENIUM,TOTAL	UG/L	25.0	26.9	108	90-110
06/19/92	ICV*PE-PURE*2	1147*CLP90	SELENIUM,TOTAL	UG/L	25.0	25.6	102	90-110

Continuing Calibration Verification Sample Summary

DATE	SAMPLE	STORET	PARAMETER	UNITS	TARGET	FOUND	%RECV	RECV CRIT
06/19/92	CCV*QC*1	1147*CLP90	SELENIUM,TOTAL	UG/L	50.0	51.7	103	90-110
06/19/92	CCV*QC*2	1147*CLP90	SELENIUM,TOTAL	UG/L	50.0	55.0	110	90-110
06/19/92	CCV*QC*3	1147*CLP90	SELENIUM,TOTAL	UG/L	50.0	52.4	105	90-110
06/19/92	CCV*QC*4	1147*CLP90	SELENIUM,TOTAL	UG/L	50.0	53.2	106	90-110
06/19/92	CCV*QC*5	1147*CLP90	SELENIUM,TOTAL	UG/L	50.0	53.8	108	90-110

Laboratory Control Sample Summary

DATE	SAMPLE	STORET	PARAMETER	%RECV	RECV CRIT	UNITS	TARGET	FOUND
06/19/92	LCS*ESE*1	1147*CLP90	SELENIUM,TOTAL	102.0	80-120	UG/L	10.0	10.2

Method Blank Sample Summary

DATE	SAMPLE	STORET	PARAMETER	UNITS	FOUND
06/19/92	MB*QC*1	1147*CLP90	SELENIUM,TOTAL	UG/L	ND

Sample Matrix Spike Recovery Summary

DATE	SAMPLE	STORET	PARAMETER	%RECV	RECV CRIT	UNSPIKED	UNITS	TARGET	FOUND	RPD
06/19/92	SPM*ALW2B*23	1147*CLP90	SELENIUM,TOTAL	54.0	75-125	0.0	UG/L	10.0	5.4	

Replicate Analysis Sample Summary

DATE	SAMPLE	STORET	PARAMETER	UNITS	REP #1	REP #2	RPD	RPD CRIT
06/19/92	RP*ALW2B*23	1147*CLP90	SELENIUM,TOTAL	UG/L	<2.0	<2.0	0.0	20

Spike into Matrix Recovery Summary

DATE	SAMPLE	STORET	PARAMETER	%RECV	RECV CRIT	UNITS	TARGET	FOUND
06/19/92	SPX*MB*1	1147*CLP90	SELENIUM,TOTAL	106.0	85-115	UG/L	100.0	106
06/19/92	SPX*ESE*1	1147*CLP90	SELENIUM,TOTAL	106.0	85-115	UG/L	100.0	106
06/19/92	SPX*ALW2B*1	1147*CLP90	SELENIUM,TOTAL	53.2	85-115	UG/L	100.0	53.2
06/19/92	SPX*ALW2B*2	1147*CLP90	SELENIUM,TOTAL	77.8	85-115	UG/L	100.0	77.8
06/19/92	SPX*ALW2B*3	1147*CLP90	SELENIUM,TOTAL	118.0	85-115	UG/L	100.0	118
06/19/92	SPX*ALW2B*4	1147*CLP90	SELENIUM,TOTAL	104.0	85-115	UG/L	100.0	104
06/19/92	SPX*ALW2B*10	1147*CLP90	SELENIUM,TOTAL	104.0	85-115	UG/L	100.0	104
06/19/92	SPX*ALW2B*11	1147*CLP90	SELENIUM,TOTAL	105.0	85-115	UG/L	100.0	105
06/19/92	SPX*ALW2B*12	1147*CLP90	SELENIUM,TOTAL	106.0	85-115	UG/L	100.0	106
06/19/92	SPX*ALW2B*13	1147*CLP90	SELENIUM,TOTAL	87.8	85-115	UG/L	100.0	87.8
06/19/92	SPX*ALW2B*14	1147*CLP90	SELENIUM,TOTAL	102.0	85-115	UG/L	100.0	102
06/19/92	SPX*ALW2B*15	1147*CLP90	SELENIUM,TOTAL	99.4	85-115	UG/L	100.0	99.4
06/19/92	SPX*ALW2B*16	1147*CLP90	SELENIUM,TOTAL	45.6	85-115	UG/L	100.0	45.6
06/19/92	SPX*ALW2B*17	1147*CLP90	SELENIUM,TOTAL	100.0	85-115	UG/L	100.0	100.0
06/19/92	SPX*ALW2B*23	1147*CLP90	SELENIUM,TOTAL	86.0	85-115	UG/L	100.0	86.0
06/19/92	SPX*ALW2BD*23	1147*CLP90	SELENIUM,TOTAL	86.0	85-115	UG/L	100.0	86.0
06/19/92	SPX*ALW2B*24	1147*CLP90	SELENIUM,TOTAL	95.0	85-115	UG/L	100.0	95.0
06/19/92	SPX*ALW2B*25	1147*CLP90	SELENIUM,TOTAL	98.8	85-115	UG/L	100.0	98.8
06/19/92	SPX*ALW2B*26	1147*CLP90	SELENIUM,TOTAL	97.8	85-115	UG/L	100.0	97.8
06/19/92	SPX*ALW2B*27	1147*CLP90	SELENIUM,TOTAL	84.6	85-115	UG/L	100.0	84.6

ESE BATCH : G28929

Environmental Science and Engineering Analytical Services
Computer QC Checks

Batch No.: G28929 Analysis Date: 06/19/92 Analyst: AMY VAN NOSTRAND

	Yes	"Exceptions" No	Comment / Corrective Action
Analysis holding time within criteria?	X		
Extract holding time within criteria?	X		
ICB present?	X		
ICB within acceptance criteria?	X		
CCB present?	X		
CCB within acceptance criteria?	X		
ICV present?	X		
ICV within acceptance criteria?	X		
CCV present?	X		
CCV within acceptance criteria?	X		
LCS present?	X		
LCS within acceptance criteria?	X		
Method blank present?	X		
Method blank within acceptance criteria?	X		
Sample matrix spike present?	X		
Sample matrix spike within acceptance criteria?		X	1147*CLP90 _____
Sample replicate present?	X		
Sample replicate within acceptance criteria?	X		
Analytical spike present?	X		
Analytical spike within acceptance criteria?		X	1147*CLP90 _____

Note: Any "NO" answer requires a comment.

OVERRIDE COMMENTS

PROB:SAMPLE MATRIX SPIKE NOT WITHIN
ACCEPTANCE CRITERIA.
EXPL:POSSIBLE MATRIX INTERFERRENCE.

PROB:ANALYTICAL SPIKE NOT WITHIN
ACCEPTANCE CRITERIA.
EXPL:SEE ABOVE.

STANDARD MATRIX SPIKE AND CALIBRATION CHECKS ARE WITHIN CRITERIA.
LOW SPM AND SPX RECOVERIES INDICATE A POSSIBLE NEGATIVE BIAS TO SAMPLE
CONCENTRATION./JMHE

ESE BATCH : G29329
CLASSIFICATION : SELENIUM - CLP SOW 3/90

STATUS : ACTIVE

METHOD BLANK CORRECTION METHOD : NONE

FIELD GRP	PROJECT NUMBER	PROJECT NAME	LAB COORDINATOR
ALW2B	3914042 0201	JMM/ALAMEDA NASCTO-121	JACKIE HARGROVE-ELLI

SAMPLE CODE	CLIENT ID	DATE ANALYZED	TIME ANALYZED
ALW2B*5	M-BG-DUP1		

Initial Calibration Blank Summary

DATE	SAMPLE	STORET	PARAMETER	UNITS	FOUND
07/02/92	ICB*QC*1	1147*CLP90	SELENIUM,TOTAL	UG/L	ND

Continuing Calibration Blank Sample Summary

DATE	SAMPLE	STORET	PARAMETER	UNITS	FOUND
07/02/92	CCB*QC*1	1147*CLP90	SELENIUM,TOTAL	UG/L	ND
07/02/92	CCB*QC*2	1147*CLP90	SELENIUM,TOTAL	UG/L	ND

Initial Calibration Verification Sample Summary

DATE	SAMPLE	STORET	PARAMETER	UNITS	TARGET	FOUND	%RECV	RECV CRIT
07/02/92	ICV*PE PURE*1	1147*CLP90	SELENIUM,TOTAL	UG/L	25.0	26.8	107	90-110

Continuing Calibration Verification Sample Summary

DATE	SAMPLE	STORET	PARAMETER	UNITS	TARGET	FOUND	%RECV	RECV CRIT
07/02/92	CCV*QC*1	1147*CLP90	SELENIUM,TOTAL	UG/L	50.0	52.5	105	90-110
07/02/92	CCV*QC*2	1147*CLP90	SELENIUM,TOTAL	UG/L	50.0	52.5	105	90-110

Laboratory Control Sample Summary

DATE	SAMPLE	STORET	PARAMETER	%RECV	RECV CRIT	UNITS	TARGET	FOUND
07/02/92	LCS*ESE*1	1147*CLP90	SELENIUM,TOTAL	101.0	80-120	UG/L	10.0	10.1

Method Blank Sample Summary

DATE	SAMPLE	STORET	PARAMETER	UNITS	FOUND
07/02/92	MB*QC*1	1147*CLP90	SELENIUM,TOTAL	UG/L	0.1

Sample Matrix Spike Recovery Summary

DATE	SAMPLE	STORET	PARAMETER	%RECV	RECV CRIT	UNSPIKED	UNITS	TARGET	FOUND	RPD
07/02/92	SPM1*ALW2B*5	1147*CLP90	SELENIUM,TOTAL	96.0	75-125	0.0	UG/L	10.0	9.6	

Replicate Analysis Sample Summary

DATE	SAMPLE	STORET	PARAMETER	UNITS	REP #1	REP #2	RPD	RPD CRIT
07/02/92	RP*ALW2B*5	1147*CLP90	SELENIUM,TOTAL	UG/L	<2.0	<2.0	0.0	20

Spike into Matrix Recovery Summary

DATE	SAMPLE	STORET	PARAMETER	%RECV	RECV CRIT	UNITS	TARGET	FOUND
07/02/92	SPX*MB*1	1147*CLP90	SELENIUM,TOTAL	105.0	85-115	UG/L	100.0	105
07/02/92	SPX*ESE*1	1147*CLP90	SELENIUM,TOTAL	106.0	85-115	UG/L	100.0	106
07/02/92	SPX*ALW2B*5	1147*CLP90	SELENIUM,TOTAL	102.0	85-115	UG/L	100.0	102
07/02/92	SPX*ALW2BD*5	1147*CLP90	SELENIUM,TOTAL	101.0	85-115	UG/L	100.0	101

ESE BATCH : G29329

Environmental Science and Engineering Analytical Services

Computer QC Checks

Batch No.: G29329 Analysis Date: 07/02/92 Analyst: ELIZABETH CREARY

	Yes	"Exceptions" No	Comment / Corrective Action
Analysis holding time within criteria?	X		
Extract holding time within criteria?	X		
ICB present?	X		
ICB within acceptance criteria?	X		
CCB present?	X		
CCB within acceptance criteria?	X		
ICV present?	X		
ICV within acceptance criteria?	X		
CCV present?	X		
CCV within acceptance criteria?	X		
LCS present?	X		
LCS within acceptance criteria?	X		
Method blank present?	X		
Method blank within acceptance criteria?	X		
Sample matrix spike present?	X		
Sample matrix spike within acceptance criteria?	X		
Sample replicate present?	X		
Sample replicate within acceptance criteria?	X		
Analytical spike present?	X		
Analytical spike within acceptance criteria?	X		

Note: Any "NO" answer requires a comment.

ESE BATCH : G28966
CLASSIFICATION : THALLIUM - CLP SOW 3/90

STATUS : FINAL

METHOD BLANK CORRECTION METHOD : NONE

FIELD GRP	PROJECT NUMBER	PROJECT NAME	LAB COORDINATOR
ALW2B	3914042 0201	JMM/ALAMEDA NASCTO-121	JACKIE HARGROVE-ELLI

SAMPLE CODE	CLIENT ID	DATE ANALYZED	TIME ANALYZED
ALW2B*1	M-BG1-GW		
ALW2B*2	M-BG2-GW		
ALW2B*3	M-BG3-GW		
ALW2B*4	M-BG4-GW		
ALW2B*10	EB1		
ALW2B*11	EB2		
ALW2B*12	EB3		
ALW2B*13	B-05PS-01		
ALW2B*14	B-05PS-02		
ALW2B*15	B-05PS-03		
ALW2B*16	B-05PS-04		
ALW2B*17	B-05PS-05		
ALW2B*23	B-05PS-DUP		
ALW2B*24	B-05WT-01		
ALW2B*25	B-05WT-02		
ALW2B*26	B-05HW-01		
ALW2B*27	B-05BS-01		

ESE BATCH : G28966

Initial Calibration Blank Summary

DATE	SAMPLE	STORET	PARAMETER	UNITS	FOUND
06/19/92	ICB*QC*1	1059*CLP90	THALLIUM,TOTAL	UG/L	0.2

Continuing Calibration Blank Sample Summary

DATE	SAMPLE	STORET	PARAMETER	UNITS	FOUND
06/19/92	CCB*QC*1	1059*CLP90	THALLIUM,TOTAL	UG/L	0.3
06/19/92	CCB*QC*2	1059*CLP90	THALLIUM,TOTAL	UG/L	0.2
06/19/92	CCB*QC*3	1059*CLP90	THALLIUM,TOTAL	UG/L	ND
06/19/92	CCB*QC*4	1059*CLP90	THALLIUM,TOTAL	UG/L	ND
06/19/92	CCB*QC*5	1059*CLP90	THALLIUM,TOTAL	UG/L	0.4

Initial Calibration Verification Sample Summary

DATE	SAMPLE	STORET	PARAMETER	UNITS	TARGET	FOUND	%RECV	RECV CRIT
06/19/92	ICV*PE PURE*1	1059*CLP90	THALLIUM,TOTAL	UG/L	20.0	22.0	110	90-110

Continuing Calibration Verification Sample Summary

DATE	SAMPLE	STORET	PARAMETER	UNITS	TARGET	FOUND	%RECV	RECV CRIT
06/19/92	CCV*QC*1	1059*CLP90	THALLIUM,TOTAL	UG/L	50.0	50.5	101	90-110
06/19/92	CCV*QC*2	1059*CLP90	THALLIUM,TOTAL	UG/L	50.0	52.6	105	90-110
06/19/92	CCV*QC*3	1059*CLP90	THALLIUM,TOTAL	UG/L	50.0	53.4	107	90-110
06/19/92	CCV*QC*4	1059*CLP90	THALLIUM,TOTAL	UG/L	50.0	53.7	107	90-110
06/19/92	CCV*QC*5	1059*CLP90	THALLIUM,TOTAL	UG/L	50.0	53.4	107	90-110

Laboratory Control Sample Summary

DATE	SAMPLE	STORET	PARAMETER	%RECV	RECV CRIT	UNITS	TARGET	FOUND
06/19/92	LCS*ESE*1	1059*CLP90	THALLIUM,TOTAL	109.6	80-120	UG/L	50.0	54.8

Method Blank Sample Summary

DATE	SAMPLE	STORET	PARAMETER	UNITS	FOUND
06/19/92	MB*QC*1	1059*CLP90	THALLIUM,TOTAL	UG/L	0.3

Sample Matrix Spike Recovery Summary

DATE	SAMPLE	STORET	PARAMETER	%RECV	RECV CRIT	UNSPIKED	UNITS	TARGET	FOUND	RPD
06/19/92	SPM1*ALW2B*23	1059*CLP90	THALLIUM,TOTAL	101.4	75-125	0.0	UG/L	50.0	50.7	

Replicate Analysis Sample Summary

DATE	SAMPLE	STORET	PARAMETER	UNITS	REP #1	REP #2	RPD	RPD CRIT
06/19/92	RP*ALW2B*23	1059*CLP90	THALLIUM,TOTAL	UG/L	<1.7	<1.7	0.0	20

Spike into Matrix Recovery Summary

DATE	SAMPLE	STORET	PARAMETER	%RECV	RECV CRIT	UNITS	TARGET	FOUND
06/19/92	SPX*MB*1	1059*CLP90	THALLIUM,TOTAL	110.0	85-115	UG/L	100.0	110
06/19/92	SPX*ESE*1	1059*CLP90	THALLIUM,TOTAL	95.2	85-115	UG/L	100.0	95.2
06/19/92	SPX*ALW2B*1	1059*CLP90	THALLIUM,TOTAL	93.0	85-115	UG/L	100.0	93.0
06/19/92	SPX*ALW2B*2	1059*CLP90	THALLIUM,TOTAL	105.0	85-115	UG/L	100.0	105
06/19/92	SPX*ALW2B*3	1059*CLP90	THALLIUM,TOTAL	104.0	85-115	UG/L	100.0	104
06/19/92	SPX*ALW2B*4	1059*CLP90	THALLIUM,TOTAL	98.8	85-115	UG/L	100.0	98.8
06/19/92	SPX*ALW2B*10	1059*CLP90	THALLIUM,TOTAL	112.0	85-115	UG/L	100.0	112
06/19/92	SPX*ALW2B*11	1059*CLP90	THALLIUM,TOTAL	112.0	85-115	UG/L	100.0	112
06/19/92	SPX*ALW2B*12	1059*CLP90	THALLIUM,TOTAL	110.0	85-115	UG/L	100.0	110
06/19/92	SPX*ALW2B*13	1059*CLP90	THALLIUM,TOTAL	107.0	85-115	UG/L	100.0	107
06/19/92	SPX*ALW2B*14	1059*CLP90	THALLIUM,TOTAL	100.0	85-115	UG/L	100.0	100.0
06/19/92	SPX*ALW2B*15	1059*CLP90	THALLIUM,TOTAL	105.0	85-115	UG/L	100.0	105
06/19/92	SPX*ALW2B*16	1059*CLP90	THALLIUM,TOTAL	97.2	85-115	UG/L	100.0	97.2
06/19/92	SPX*ALW2B*17	1059*CLP90	THALLIUM,TOTAL	104.0	85-115	UG/L	100.0	104
06/19/92	SPX*ALW2B*23	1059*CLP90	THALLIUM,TOTAL	105.0	85-115	UG/L	100.0	105
06/19/92	SPX*ALW2BD*23	1059*CLP90	THALLIUM,TOTAL	103.0	85-115	UG/L	100.0	103
06/19/92	SPX*ALW2B*24	1059*CLP90	THALLIUM,TOTAL	105.0	85-115	UG/L	100.0	105
06/19/92	SPX*ALW2B*25	1059*CLP90	THALLIUM,TOTAL	101.0	85-115	UG/L	100.0	101
06/19/92	SPX*ALW2B*26	1059*CLP90	THALLIUM,TOTAL	105.0	85-115	UG/L	100.0	105
06/19/92	SPX*ALW2B*27	1059*CLP90	THALLIUM,TOTAL	99.2	85-115	UG/L	100.0	99.2

ESE BATCH : G28966

Environmental Science and Engineering Analytical Services

Computer QC Checks

Batch No.: G28966 Analysis Date: 06/19/92 Analyst: ELIZABETH CREARY

	Yes	"Exceptions" No	Comment / Corrective Action
Analysis holding time within criteria?	X		
Extract holding time within criteria?	X		
ICB present?	X		
ICB within acceptance criteria?	X		
CCB present?	X		
CCB within acceptance criteria?	X		
ICV present?	X		
ICV within acceptance criteria?	X		
CCV present?	X		
CCV within acceptance criteria?	X		
LCS present?	X		
LCS within acceptance criteria?	X		
Method blank present?	X		
Method blank within acceptance criteria?	X		
Sample matrix spike present?	X		
Sample matrix spike within acceptance criteria?	X		
Sample replicate present?	X		
Sample replicate within acceptance criteria?	X		
Analytical spike present?	X		
Analytical spike within acceptance criteria?	X		

Note: Any "NO" answer requires a comment.

ESE BATCH : G29330
CLASSIFICATION : THALLIUM - CLP SOW 3/90

STATUS : ACTIVE

METHOD BLANK CORRECTION METHOD : NONE

FIELD GRP	PROJECT NUMBER	PROJECT NAME	LAB COORDINATOR
ALW2B	3914042 0201	JMM/ALAMEDA NASCTO-121	JACKIE HARGROVE-ELLI

SAMPLE CODE	CLIENT ID	DATE ANALYZED	TIME ANALYZED
ALW2B*5	M-BG-DUP1		

Initial Calibration Blank Summary

DATE	SAMPLE	STORET	PARAMETER	UNITS	FOUND
07/03/92	ICB*QC*1	1059*CLP90	THALLIUM,TOTAL	UG/L	ND

Continuing Calibration Blank Sample Summary

DATE	SAMPLE	STORET	PARAMETER	UNITS	FOUND
07/03/92	CCB*QC*1	1059*CLP90	THALLIUM,TOTAL	UG/L	0.2
07/03/92	CCB*QC*2	1059*CLP90	THALLIUM,TOTAL	UG/L	0.2

Initial Calibration Verification Sample Summary

DATE	SAMPLE	STORET	PARAMETER	UNITS	TARGET	FOUND	%RECV	RECV CRIT
07/03/92	ICV*PE-PURE*1	1059*CLP90	THALLIUM,TOTAL	UG/L	20.0	20.3	102	90-110

Continuing Calibration Verification Sample Summary

DATE	SAMPLE	STORET	PARAMETER	UNITS	TARGET	FOUND	%RECV	RECV CRIT
07/03/92	CCV*QC*1	1059*CLP90	THALLIUM,TOTAL	UG/L	50.0	54.0	108	90-110
07/03/92	CCV*QC*2	1059*CLP90	THALLIUM,TOTAL	UG/L	50.0	54.4	109	90-110

Laboratory Control Sample Summary

DATE	SAMPLE	STORET	PARAMETER	%RECV	RECV CRIT	UNITS	TARGET	FOUND
07/03/92	LCS*ESE*1	1059*CLP90	THALLIUM,TOTAL	99.8	80-120	UG/L	50.0	49.9

Method Blank Sample Summary

DATE	SAMPLE	STORET	PARAMETER	UNITS	FOUND
07/03/92	MB*QC*1	1059*CLP90	THALLIUM,TOTAL	UG/L	ND

Sample Matrix Spike Recovery Summary

DATE	SAMPLE	STORET	PARAMETER	%RECV	RECV CRIT	UNSPIKED	UNITS	TARGET	FOUND	RPD
07/03/92	SPM*ALW2B*5	1059*CLP90	THALLIUM,TOTAL	87.0	75-125	0.0	UG/L	50.0	43.5	

Replicate Analysis Sample Summary

DATE	SAMPLE	STORET	PARAMETER	UNITS	REP #1	REP #2	RPD	RPD CRIT
07/03/92	RP*ALW2B*5	1059*CLP90	THALLIUM,TOTAL	UG/L	<1.7	<1.7	0.0	20

Spike into Matrix Recovery Summary

DATE	SAMPLE	STORET	PARAMETER	%RECV	RECV CRIT	UNITS	TARGET	FOUND
07/03/92	SPX*MB*1	1059*CLP90	THALLIUM,TOTAL	102.6	85-115	UG/L	100.0	102.6
07/03/92	SPX*ESE*1	1059*CLP90	THALLIUM,TOTAL	101.5	85-115	UG/L	100.0	101.5
07/03/92	SPX*ALW2B*5	1059*CLP90	THALLIUM,TOTAL	95.6	85-115	UG/L	100.0	95.6

ESE BATCH : G29330

Environmental Science and Engineering Analytical Services

Computer QC Checks

Batch No.: G29330 Analysis Date: 07/03/92 Analyst: CHRISTOPHER HORRELL

	Yes	"Exceptions" No	Comment / Corrective Action
Analysis holding time within criteria?	X		
Extract holding time within criteria?	X		
ICB present?	X		
ICB within acceptance criteria?	X		
CCB present?	X		
CCB within acceptance criteria?	X		
ICV present?	X		
ICV within acceptance criteria?	X		
CCV present?	X		
CCV within acceptance criteria?	X		
LCS present?	X		
LCS within acceptance criteria?	X		
Method blank present?	X		
Method blank within acceptance criteria?	X		
Sample matrix spike present?	X		
Sample matrix spike within acceptance criteria?	X		
Sample replicate present?	X		
Sample replicate within acceptance criteria?	X		
Analytical spike present?	X		
Analytical spike within acceptance criteria?	X		

Note: Any "NO" answer requires a comment.

OVERRIDE COMMENTS

Acidity

ESE BATCH : G29020
CLASSIFICATION : ACIDITY, E305.1

STATUS : FINAL

METHOD BLANK CORRECTION METHOD : NONE

FIELD GRP	PROJECT NUMBER	PROJECT NAME	LAB COORDINATOR
ALW2B	3914042 0201	JMM/ALAMEDA NASCTO-121	JACKIE HARGROVE-ELLI

SAMPLE CODE	CLIENT ID	DATE ANALYZED	TIME ANALYZED
ALW2B*1	M-BG1-GW		
ALW2B*2	M-BG2-GW		
ALW2B*3	M-BG3-GW		
ALW2B*4	M-BG4-GW		
ALW2B*5	M-BG-DUP1		
ALW2B*10	EB1		
ALW2B*11	EB2		

Initial Calibration Verification Sample Summary

DATE	SAMPLE	STORET	PARAMETER	UNITS	TARGET	FOUND	%RECV	RECV CRIT
06/23/92	ICV*QC*1	435*1	ACIDITY,TOTAL	MG/L- CACO3	100.0	102	102	80-120

Method Blank Sample Summary

DATE	SAMPLE	STORET	PARAMETER	UNITS	FOUND
06/23/92	MB*QC*1	435*1	ACIDITY,TOTAL	MG/L- CACO3	1.3
06/23/92	MB*QC*2	435*1	ACIDITY,TOTAL	MG/L- CACO3	1.8

Standard Matrix Spike Recovery Summary

DATE	SAMPLE	STORET	PARAMETER	%RECV	RECV CRIT	UNITS	TARGET	FOUND
06/23/92	SP1*QC*1	435*1	ACIDITY,TOTAL	101.0	91.9-108.1	MG/L- CACO3	100.0	101
06/23/92	SP2*QC*1	435*1	ACIDITY,TOTAL	101.0	91.9-108.1	MG/L- CACO3	100.0	101

Sample Matrix Spike Recovery Summary

DATE	SAMPLE	STORET	PARAMETER	%RECV	RECV CRIT	UNSPIKED	UNITS	TARGET	FOUND	RPD
06/23/92	SPM1*ALW2B*4	435*1	ACIDITY,TOTAL	101.0	91.9-108.1	13.8	MG/L- CACO3	100.0	101	
06/23/92	SPM2*ALW2B*4	435*1	ACIDITY,TOTAL	93.2	91.9-108.1	13.8	MG/L- CACO3	100.0	93.2	8.

Computer QC Checks

Batch No.: G29020 Analysis Date: 06/23/92 Analyst: MARK TRAVIS

	Yes	"Exceptions" No	Comment / Corrective Action
Analysis holding time within criteria?	X		
Extract holding time within criteria?	X		
Method blank present?	X		
Method blank within acceptance criteria?	X		
Standard matrix spike present?	X		
Standard matrix spike within acceptance criteria?	X		
Sample matrix spike present?	X		
Sample matrix spike within acceptance criteria?	X		
Sample matrix spike duplicate present?	X		
Sample matrix spike duplicate within acceptance criteria?		X	435*1

Note: Any "NO" answer requires a comment.

OVERRIDE COMMENTS

PROB:SAMPLE MATRIX SPIKE DUPLICATE
NOT WITHIN ACCEPTANCE CRITERIA.
EXPL:PROBABLE MATRIX EFFECT CAUSING
SLIGHTLY HIGH RECOVERY FOR SPM1:
TITRATOR HAD DIFFICULTY REACHING
THE END POINT.

Alkalinity

ESE BATCH : G29093
CLASSIFICATION : ALKALINITY, SM403

STATUS : FINAL

METHOD BLANK CORRECTION METHOD : NONE

FIELD GRP	PROJECT NUMBER	PROJECT NAME	LAB COORDINATOR
ALW2B	3914042 0201	JMM/ALAMEDA NASCTO-121	JACKIE HARGROVE-ELLI

SAMPLE CODE	CLIENT ID	DATE ANALYZED	TIME ANALYZED
ALW2B*1	M-BG1-GW		
ALW2B*2	M-BG2-GW		
ALW2B*3	M-BG3-GW		
ALW2B*4	M-BG4-GW		
ALW2B*5	M-BG-DUP1		
ALW2B*10	EB1		
ALW2B*11	EB2		

Continuing Calibration Verification Sample Summary

DATE	SAMPLE	STORET	PARAMETER	UNITS	TARGET	FOUND	%RECV	RECV CRIT
06/24/92	CCV*QC*1	410*1	ALKALINITY,T.	MG/L-CACO3	7.0	7.0	100.0	80-120
06/24/92	CCV*QC*1	415*1	ALKALINITY,PHENOLPH	MG/L	7.0	7.0	100.0	80-120

Method Blank Sample Summary

DATE	SAMPLE	STORET	PARAMETER	UNITS	FOUND
06/24/92	MB*QC*1	410*1	ALKALINITY,T.	MG/L-CACO3	3.0
06/24/92	MB*QC*1	415*1	ALKALINITY,PHENOLPH	MG/L	3.0

Standard Matrix Spike Recovery Summary

DATE	SAMPLE	STORET	PARAMETER	%RECV	RECV CRIT	UNITS	TARGET	FOUND
06/24/92	SP1*QC*1	410*1	ALKALINITY,T.	100.9	89-109	MG/L-CACO3	2230	2250
06/24/92	SP2*QC*2	410*1	ALKALINITY,T.	96.0	89-109	MG/L-CACO3	2230	2140

Sample Matrix Spike Recovery Summary

DATE	SAMPLE	STORET	PARAMETER	%RECV	RECV CRIT	UNSPIKED	UNITS	TARGET	FOUND	RPD
06/24/92	SPM3*ALW2B*5	410*1	ALKALINITY,T.	98.4	89-109	109	MG/L-CACO3	44.7	44.0	
06/24/92	SPM4*ALW2B*5	410*1	ALKALINITY,T.	100.9	89-109	109	MG/L-CACO3	44.6	45.0	2

Computer QC Checks

Batch No.: G29093 Analysis Date: 06/24/92 Analyst: ESTELLA SANDERS

	Yes	No	"Exceptions" Comment / Corrective Action
Analysis holding time within criteria?	X		
Extract holding time within criteria?	X		
Method blank present?	X		
Method blank within acceptance criteria?	X		
Standard matrix spike present?	X		
Standard matrix spike within acceptance criteria?	X		
Sample matrix spike present?	X		
Sample matrix spike within acceptance criteria?	X		
Sample matrix spike duplicate present?	X		
Sample matrix spike duplicate within acceptance criteria?	X		

Note: Any "NO" answer requires a comment.

OVERRIDE COMMENTS

B.O.D.

ESE BATCH : G28936
CLASSIFICATION : BOD,5-DAY - E405.1

STATUS : FINAL

METHOD BLANK CORRECTION METHOD : NONE

FIELD GRP	PROJECT NUMBER	PROJECT NAME	LAB COORDINATOR
ALW2B	3914042 0201	JMM/ALAMEDA NASCTO-121	JACKIE HARGROVE-ELLI

SAMPLE CODE	CLIENT ID	DATE ANALYZED	TIME ANALYZED
ALW2B*1	M-BG1-GW		
ALW2B*2	M-BG2-GW		
ALW2B*3	M-BG3-GW		
ALW2B*4	M-BG4-GW		
ALW2B*10	EB1		

Method Blank Sample Summary

DATE	SAMPLE	STORET	PARAMETER	UNITS	FOUND
06/18/92	MB*QC*1	310*1	BOD,5-DAY	MG/L	0.2
06/18/92	MB*QC*2	310*1	BOD,5-DAY	MG/L	0.1

Standard Matrix Spike Recovery Summary

DATE	SAMPLE	STORET	PARAMETER	%RECV	RECV CRIT	UNITS	TARGET	FOUND
06/18/92	SP1*QC*1	310*1	BOD,5-DAY	105.0	60-136	MG/L	200	210
06/18/92	SP2*QC*1	310*1	BOD,5-DAY	105.0	60-136	MG/L	200	210

Sample Matrix Spike Recovery Summary

DATE	SAMPLE	STORET	PARAMETER	%RECV	RECV CRIT	UNSPIKED	UNITS	TARGET	FOUND	RPD
06/18/92	SPM1*SCLFW9*1	310*1	BOD,5-DAY	109.6	60-136	9.7	MG/L	24.0	26.3	
06/18/92	SPM2*SCLFW9*1	310*1	BOD,5-DAY	104.6	60-136	9.7	MG/L	24.0	25.1	4.7

Computer QC Checks

Batch No.: G28936 Analysis Date: 06/18/92 Analyst: KATHLEEN ALLEN

	Yes	"Exceptions" No	Comment / Corrective Action
Analysis holding time within criteria?	X		
Extract holding time within criteria?	X		
Method blank present?	Y		
Method blank within acceptance criteria?	X		
Standard matrix spike present?	X		
Standard matrix spike within acceptance criteria?	X		
Sample matrix spike present?	Y		
Sample matrix spike within acceptance criteria?	X		
Sample matrix spike duplicate present?	X		
Sample matrix spike duplicate within acceptance criteria?	X		

Note: Any "NO" answer requires a comment.

MS/MSD WERE PERFORMED ON NON-ALAMEDA SAMPLES/JMHE

ESE BATCH : G29090
CLASSIFICATION : BOD,5-DAY - E405.1

STATUS : FINAL

METHOD BLANK CORRECTION METHOD : NONE

FIELD GRP	PROJECT NUMBER	PROJECT NAME	LAB COORDINATOR
ALW2B	3914042 0201	JMM/ALAMEDA NASCTO-121	JACKIE HARGROVE-ELLI

SAMPLE CODE	CLIENT ID	DATE ANALYZED	TIME ANALYZED
ALW2B*5	M-BG-DUP1		
ALW2B*11	EB2		

ESE ANALYSIS HOLDING TIME QC CHECK
BATCH= G29090 REPORT DATE= 07/12/92

LIST OF SAMPLES EXCEEDING HOLDING TIMES "EX"=EXTRACT DATE

FG*SEQ	STORET*METHOD	ANALYSIS DATE	SAMPLE DATE	HOLD TIME	DAY(S) EXCEEDED
ALW2B*5	310*1	06/23/92	06/17/92EX	2	1
ALW2B*11	310*1	06/23/92	06/17/92EX	2	1

Method Blank Sample Summary

DATE	SAMPLE	STORET	PARAMETER	UNITS	FOUND
06/23/92	MB*QC*1	310*1	BOD,5-DAY	MG/L	ND
06/23/92	MB*QC*2	310*1	BOD,5-DAY	MG/L	ND

Standard Matrix Spike Recovery Summary

DATE	SAMPLE	STORET	PARAMETER	%RECV	RECV CRIT	UNITS	TARGET	FOUND
06/23/92	SP*QC*1	310*1	BOD,5-DAY	128.0	60-136	MG/L	200	256
06/23/92	SP*QC*2	310*1	BOD,5-DAY	111.5	60-136	MG/L	200	223

Sample Matrix Spike Recovery Summary

DATE	SAMPLE	STORET	PARAMETER	%RECV	RECV CRIT	UNSPIKED	UNITS	TARGET	FOUND	RPD
06/23/92	SPM1*ALW2B*5	310*1	BOD,5-DAY	127.9	60-136	5.4	MG/L	24.0	30.7	
06/23/92	SPM2*ALW2B*5	310*1	BOD,5-DAY	109.6	60-136	5.4	MG/L	24.0	26.3	15.1

Computer QC Checks

Batch No.: G29090 Analysis Date: 06/23/92 Analyst: ESTELLA SANDERS

	Yes	No	"Exceptions" Comment / Corrective Action
Analysis holding time within criteria?		X	310*1
Extract holding time within criteria?	X		
Method blank present?	X		
Method blank within acceptance criteria?	X		
Standard matrix spike present?	X		
Standard matrix spike within acceptance criteria?	X		
Sample matrix spike present?	X		
Sample matrix spike within acceptance criteria?	X		
Sample matrix spike duplicate present?	X		
Sample matrix spike duplicate within acceptance criteria?	X		

Note: Any "NO" answer requires a comment.

OVERRIDE COMMENTS

PROB:ANALYSIS HOLDING TIME NOT WITHIN
CRITERIA.
EXPL:BOD METER NOT CALIBRATING PROPERLY,CHANGED BOD MEMBRANE TWICE SO THEREFORE HAD TO DO A 6 DAY BOD CALCULATION./EMS/6/25/92
DATA ARE GOOD. A 5 DAY BOD CALCULATED FROM A READING ON THE 6TH DAY./KKA/6/26/92

C.O.D.

ESE BATCH : G29010
CLASSIFICATION : C.O.D

STATUS : FINAL

METHOD BLANK CORRECTION METHOD : NONE

FIELD GRP	PROJECT NUMBER	PROJECT NAME	LAB COORDINATOR
ALW2B	3914042 0201	JMM/ALAMEDA NASCTO-121	JACKIE HARGROVE-ELLI

SAMPLE CODE	CLIENT ID	DATE ANALYZED	TIME ANALYZED
ALW2B*1	M-BG1-GW		
ALW2B*2	M-BG2-GW		
ALW2B*3	M-BG3-GW		
ALW2B*4	M-BG4-GW		
ALW2B*10	EB1		
ALW2B*11	EB2		

Method Blank Sample Summary

DATE	SAMPLE	STORET	PARAMETER	UNITS	FOUND
06/23/92	MB*QC*1	340*HACH	COD,HIGH LEVEL	MG/L	ND

Standard Matrix Spike Recovery Summary

DATE	SAMPLE	STORET	PARAMETER	%RECV	RECV CRIT	UNITS	TARGET	FOUND
06/23/92	SP*QC*1	340*HACH	COD,HIGH LEVEL	102.4	90-112	MG/L	500.0	512.0

Sample Matrix Spike Recovery Summary

DATE	SAMPLE	STORET	PARAMETER	%RECV	RECV CRIT	UNSPIKED	UNITS	TARGET	FOUND	RPD
06/23/92	SPM1*ALW2B*1	340*HACH	COD,HIGH LEVEL	81.9	90-112	417.0	MG/L	1000.0	819.0	
06/23/92	SPM2*ALW2B*1	340*HACH	COD,HIGH LEVEL	85.7	90-112	417.0	MG/L	1000.0	857.0	4.5

Replicate Analysis Sample Summary

DATE	SAMPLE	STORET	PARAMETER	UNITS	REP #1	REP #2	RPD	RPD CRIT
06/23/92	RP*ALW2B*1	340*HACH	COD,HIGH LEVEL	MG/L	417.0	447.0	6.9	15

Computer QC Checks

Batch No.: G29010 Analysis Date: 06/23/92 Analyst: DEANN TRAN

	Yes	"Exceptions" No	Comment / Corrective Action
Analysis holding time within criteria?	X		
Extract holding time within criteria?	X		
Method blank present?	X		
Method blank within acceptance criteria?	X		
Standard matrix spike present?	X		
Standard matrix spike within acceptance criteria?	X		
Sample matrix spike present?	X		
Sample matrix spike within acceptance criteria?		X	340*HACH
Sample matrix spike duplicate present?	X		
Sample matrix spike duplicate within acceptance criteria?		X	340*HACH

Note: Any "NO" answer requires a comment.

OVERRIDE COMMENTS

PROB:SAMPLE MATRIX SPIKE AND SAMPLE
MATRIX SPIKE DUPLICATE NOT WITH-
IN ACCEPTANCE CRITERIA.
EXPL:SAMPLE WAS TURBID, HIGH AMOUNT OF
SUSPENDED SOLIDS, MAKING IT DIFFICULT
TO GET GOOD RESULTS./DAT/6/24/92

ALHAMBRA WATER RESULTS

Alhambra

NATIONAL WATER COMPANY, INC.

APPROVED WATER LABORATORY

Purified Typical Analysis

The U.S. Pharmacopeia states, "Purified water is water obtained by distillation, ion-exchange treatment, reverse osmosis, or other suitable process. It is prepared from water complying with the regulations of the federal Environmental Protection Agency with respect to drinking water. Purified water contains no added substance."

TYPICAL MINERAL ANALYSIS

Bicarbonate	<0.5 mg/L
Calcium	<0.1 mg/L
Chloride	<0.05 mg/L
Fluoride	<0.1 mg/L
Magnesium	<0.1 mg/L
Sodium	<0.1 mg/L
Sulfate	<0.5 mg/L
Total Dissolved Solids	<2.0 mg/L
Specific Conductance	<2.0 umhos
pH	5.5 — 7.0

TYPICAL ANALYSIS FOR VOLATILE ORGANICS

Vinyl Chloride	<1.0 ug/L
Chloroform	<1.0 ug/L
1,1—Dichloroethene	<1.0 ug/L
1,2—Dichloroethane	<1.0 ug/L
1,1,1—Trichloroethane	<1.0 ug/L
Carbon Tetrachloride	<1.0 ug/L
Bromodichloromethane	<1.0 ug/L
Trichloroethylene	<1.0 ug/L
Chlorodibromomethane	<1.0 ug/L
Bromoform	<1.0 ug/L
Tetrachloroethylene	<1.0 ug/L
Chlorobenzene	<1.0 ug/L
1,4—Dichlorobenzene	<1.0 ug/L
Benzene	<1.0 ug/L

EXPLANATION OF SYMBOLS

"<"	"Less than" which means that the contaminant was not found at the noted detection limit.
mg/L	Milligrams per liter or parts per million
ug/L	Micrograms per liter or parts per billion
pCi/L	Picocuries per liter
umhos	Micromhos
*	0.005 in California
**	10.0 in California

TYPICAL FDA COMPLIANCE ANALYSIS

	mg/L	FDA Standard mg/L
Arsenic	<0.003	0.05
Barium	<0.05	1.0
Cadmium	<0.01	0.01
Chromium	<0.03	0.05
Copper	<0.02	1.0
Iron	<0.2	0.3
Lead	<0.005	0.05*
Manganese	<0.01	0.05
Mercury	<0.0005	0.002
Nitrate (N)	<0.4	10.0
Phenol	<0.001	0.001
Selenium	<0.003	0.01
Silver	<0.02	0.05
Zinc	<0.04	5.0
Color	<5	15 units
Turbidity	0.1	<5
	ug/L	**ug/L**
Lindane	<0.05	4.0
Endrin	<0.1	0.2
Methoxychlor	<1.0	100
Toxaphene	<0.1	5.0
2-4 D	<5.0	100
2,4,5-TP	<1.0	10.0
Trihalomethanes	<1.0	100 **
Radioactivity (pCi/L)		
Gross Alpha	<3	<3
Gross Beta	<5	<5

Respectfully submitted,

Sarah F Cowman

Sarah F. Cowman
Manager, Technical Services

ANALYSES PERFORMED BY STATE APPROVED LABORATORIES

3139-91 (1/88)

Some questions and answers regarding the processing of Alhambra® Water

Q: What is demineralization, reverse osmosis and aeration?

A: Demineralization is the process of removing dissolved solids or minerals from the water. In **Reverse Osmosis**, water under pressure is forced through membranes to remove a high percentage of minerals or other impurities. **De-ionization** is a process in which water is passed through insoluble resins to remove virtually all of the dissolved solids. **Aeration** is a process which sprays water through a flow of air to remove dissolved gases and any volatile contaminants that might be present.

Q: Doesn't that result in a water without taste?

A: Yes, in fact at this point the water can be bottled as Purified water for distilled water uses. But to prepare our Crystal-fresh® drinking water, we add a very carefully controlled blend of food-grade minerals to give it a deliciously refreshing taste.

Q: How can Alhambra water be bacteriologically safe if it isn't chlorinated?

A: In the final stage of our preparation process, all waters go through ozonation to ensure proper sanitation before bottling. Ozonation means saturating the water with ozone gas, a strong disinfection agent. After a few hours the ozone turns into regular oxygen in the water.

Q: Does Alhambra's purification process take out radioactive material and other chemical pollutants?

A: If such pollutants did get into our source water, our multi-stage purification process has the capability of removing them.

Q: Does the source of water make a difference in the final bottled water product?

A: The source of water makes virtually no difference at all. The sophisticated nature of the Alhambra water processing system makes it possible to use just about any source and still produce a bottle of our high quality, fresh-tasting drinking water. However, we still carefully monitor the quality of our source water and our processing system will shut down if any sort of contaminant is detected.

Q: Do you have any additional means of safeguarding the quality of your water?

A: Each Alhambra bottled water plant is equipped with its own water quality control laboratory, which is approved by the State of California, Department of Public Health, for chemical and bacteriological analysis. Specially-trained technicians perform quality control tests both in the lab and all along the bottling line. Additionally, automatic instrumentation constantly monitors the quality of Alhambra water.

Q: What about Alhambra Mountain Spring water?

A: This natural mountain spring water is sodium-free. It is carbon-filtered, and ozone is applied prior to bottling, in order to kill bacteria. Otherwise, it is unprocessed natural mountain spring water.

How does Alhambra process its water?

This illustrates the Alhambra processing system. Essentially everything is removed from the water and precisely controlled amounts of select food grade minerals are added back to produce Alhambra's delicious flavor.

Quality Control tests are continuously performed throughout the process to assure consistently high quality Drinking Water, which meets or exceeds all Federal and State Standards for Bottled Water.

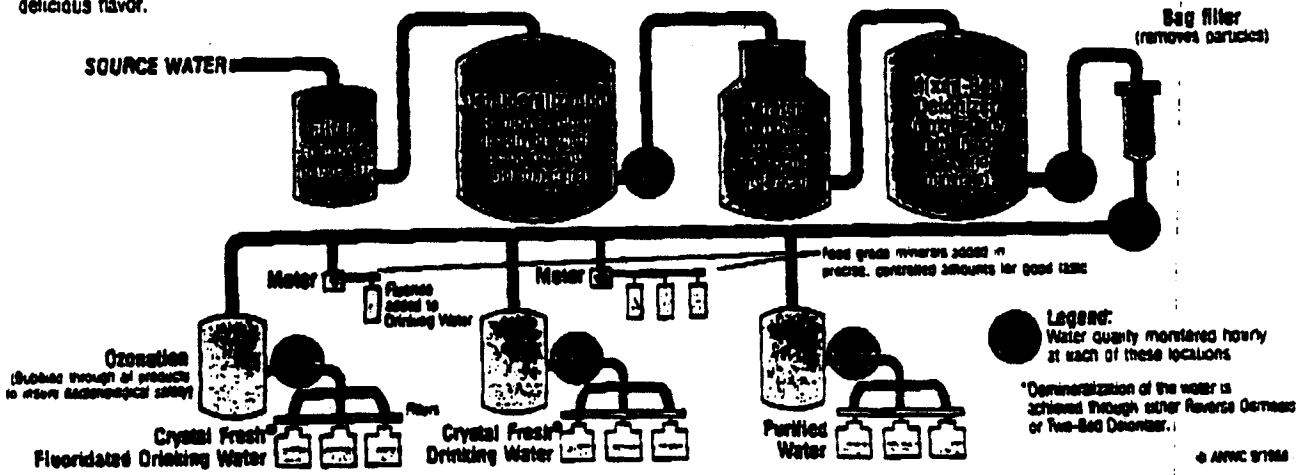

APPENDIX F

CHAINS OF CUSTODY

Soils

Environmental Science & Engineering 05-21-92 *** FIELD LOGSHEET *** FIELD GROUP: A B
PROJECT NUMBER 914042 0201 PROJECT NAME: JMM/ALAMEDA CTO-121 LAB COORD. JACKIE HARGROVE-ELLIOT

6/12

SE #	SITE	STR HAZ?	FRACTIONS(CIRCLE)	DATE	TIME	PARAMETER LIST	DEPTH FEET
*27	M-BG1		(SS) (SS) (SV) (SV)	5-27-92	1245	ALS2B.3	SURFACE (0-6")
*28	M-BG1		SS (SS) (SV) (SV)	5-27-92	1300	ALS2B.3	2-2½
*29	M-BG1		SS (SS) (SV) (SV)	5-27-92	1304	ALS2B.3	3-3½
*30	M-BG1		SS (SS) (SV) (SV)	5-27-92	1312	ALS2B.3	5
*31	M-BG2		SS SS SV SV			ALS2B.3	
*32	M-BG2		SS SS SV SV			ALS2B.3	
*33	M-BG2		SS SS SV SV			ALS2B.3	
*34	M-BG2		SS SS SV SV			ALS2B.3	
*35	M-BG3		SS SS SV SV			ALS2B.3	
*36	M-BG3		SS SS SV SV			ALS2B.3	
*37	M-BG3		SS SS SV SV			ALS2B.3	
*38	M-BG4		SS SS SV SV			ALS2B.3	
*39	M-BG4		SS SS SV SV			ALS2B.3	
*40	M-BG4		SS SS SV SV			ALS2B.3	
*41	M-BG4		SS SS SV SV			ALS2B.3	
*42	M-BG4		SS SS SV SV			ALS2B.3	
*43	M-BG4		SS SS SV SV			ALS2B.3	
*44	M-SB1-01		SS SS SV SV			ALS2B.4	

NOTE -CHANGE OR ENTER SITE ID AS NECESSARY; UP TO 9 ALPHANUMERIC CHARACTERS MAY BE USED
-CIRCLE FRACTIONS COLLECTED. ENTER DATE,TIME,FIELD DATA (IF REQUIRED), HAZARD CODE AND NOTES
-HAZARD CODES: I-IGNITABLE C-CORROSIVE R-REACTIVE T-TOXIC WASTE H-OTHER ACUTE HAZARD; IDENTIFY SPECIFICS IF KNOWN
-PLEASE RETURN COMPLETED LOGSHEETS WITH SAMPLES TO Environmental Science & Engineering, Inc.

RELINQUISHED BY: (NAME/ORGANIZATION/DATE/TIME)	VIA:	REC'D BY (NAME/ORGANIZATION/DATE/TIME)
1 [illegible] /Ltd/5-27-92/1245		Federal Express 5-27-92
2		V. Prem Das ESE 5-28 1300
3		

SAMPLES TO BE SHIPPED? ___ IF YES, ANTICIPATED # ___ TO SHIP ON / /
SAMPLE Custody Seals Intact? Y Samples Iced? Y Preservations Audited? N Problems? N

Job No. 2738.0655

CTO - 121

ALAMEDA NAVAL AIR STATION
SUMMARY OF SAMPLE SHIPMENT TO ESE

Page ___ of ___

	Sample I.D.	Depth (feet)	Sample Type (H2O/Soil)	ESE Sample No.	Type and No. of Containers	Date Sampled	Time
1	M-BG1-00	0	Soil	30	2SS; 2-SV	5-27-92	1245
2	M-BG1-02	2	↓	29	↓	5-27-92	1300
3	M-BG1-03	3		28		5-27-92	1304
4	M-BG1-05	5		27		5-27-92	1312
5							
6							
7							
8							
9							
10							
11							
12							
13							
14							
15							
16							
17							
18							
19							
20							
21							
22							
23							
24							
25							
26							
27							
28							
				TOTAL:	16		

Cooler No.: 1 Fed. Express No.: _____

Date Shipped: 5-27-92 Completed By: DEK

Received by (ESE): William Ott Date Received: 5-28-92

Attach COC and include this form in each cooler.

Environmental Science & Engineering 05-21-92 · FIELD LOGSHEET *** FIELD GROUP: A[illegible]B
PROJECT NUMBER 3914042 0201 PROJECT NAME: JMM/ALAMEDA CTO-121 LAB COORD. JACKIE HARGROVE-ELLIOT

6/19

SE #	SITE/STA	HAZ?	FRACTIONS(CIRCLE)	DATE	TIME	PARAMETER LIST	DEPTH FEET
*27	M-BG1		SS SS SV SV			ALS2B.3	
*28	M-BG1		SS SS SV SV			ALS2B.3	
*29	M-BG1		SS SS SV SV			ALS2B.3	
*30	M-BG1		SS SS SV SV			ALS2B.3	
*31	M-BG2		SS SS SV SV	5-28-92	0852	ALS2B.3	00
*32	M-BG2		SS SS SV SV	5-28-92	0915	ALS2B.3	002
*33	M-BG2		SS SS SV SV	5-28-92	0920	ALS2B.3	003
*34	M-BG2		SS SS SV SV	5-28-92	0927	ALS2B.3	05
*35	M-BG3		SS SS SV SV			ALS2B.3	
*36	M-BG3		SS SS SV SV			ALS2B.3	
*37	M-BG3		SS SS SV SV			ALS2B.3	
*38	M-BG3		SS SS SV SV			ALS2B.3	
*39	M-BG4		SS SS SV SV			ALS2B.3	
*40	M-BG4		SS SS SV SV			ALS2B.3	
*41	M-BG4		SS SS SV SV			ALS2B.3	
*42	M-BG1		SS SS SV SV			ALS2B.3	
*43	[illegible]-DUP[illegible]		SS SS SV SV	5-28-92		ALS2B.3	
*44	[illegible]-[illegible]		SS SS SV SV			ALS2B.4	

NOTE: CHANGE OR ENTER SITE ID AS NECESSARY; UP TO 9 ALPHANUMERIC CHARACTERS MAY BE USED
CIRCLE FRACTIONS COLLECTED. ENTER DATE,TIME,FIELD DATA (IF REQUIRED), HAZARD CODE AND NOTES
HAZARD CODES: I-IGNITABLE C-CORROSIVE R-REACTIVE T-TOXIC WASTE H-OTHER ACUTE HAZARD; IDENTIFY SPECIFICS IF KNOWN
PLEASE RETURN COMPLETED LOGSHEETS WITH SAMPLES TO Environmental Science & Engineering, Inc.

FRIN[illegible] BY: NAME ORGANIZATION/DATE/TIME)	VIA:	REC'D BY (NAME/ORGANIZATION/DATE/TIME)
DEL [illegible] 5-28-92/1750		FedX N Plan Ocd ESE 5-30 1400

[illegible] MORE SAMPLES TO BE SHIPPED? ___ IF YES, ANTICIPATED # ___ TO SHIP ON / /
SAMPLE CUSTODIAN: Custody Seals Intact? ~~Y~~ Samples Iced? Y Preservations Audited? N Problems? N

WD Yes 6°C

Environmental Science & Engineering 05-21-92 FIELD LOGSHEET *** FIELD GROUP: AL B
PROJECT NUMBER 3914042 0201 PROJECT NAME: JMM/ALAMEDA CTO-121 LAB COORD. JACKIE HARGROVE-ELLIOT

6/19

E #	SITE/STA	HAZ?	FRACTIONS(CIRCLE)	DATE	TIME	PARAMETER LIST	DEPTH FEET
*27	M-BG1		SS SS SV SV			ALS2B.3	
*28	M-BG1		SS SS SV SV			ALS2B.3	
*29	M-BG1		SS SS SV SV			ALS2B.3	
*30	M-BG1		SS SS SV SV			ALS2B.3	
*31	M-BG2		SS SS SV SV			ALS2B.3	
*32	M-BG2		SS SS SV SV			ALS2B.3	
*33	M-BG2		SS SS SV SV			ALS2B.3	
*34	M-BG2		SS SS SV SV			ALS2B.3	
*35	M-BG3		SS SS SV SV	5/29/92	1115	ALS2B.3	00
*36	M-BG3		SS SS SV SV	5/29/92	1132	ALS2B.3	02
*37	M-BG3		SS SS SV SV	5/29/92	1139	ALS2B.3	04
*38	M-BG3		SS SS SV SV	5/29/92	1144	ALS2B.3	06
*39	M-BG4		SS SS SV SV	5/29/92	1426	ALS2B.3	00
*40	M-BG4		SS SS SV SV	5/29/92	1446	ALS2B.3	02
*41	M-BG4		SS SS SV SV	5/29/92	1512	ALS2B.3	7.5
*42	M-BG4		SS SS SV SV	5/29/92	1516	ALS2B.3	10
*43	PG-DUP1		SS SS SV SV			ALS2B.3	
*44	E-05PS-01		SS SS SV SV			ALS2B.4	

NOTE -CHANGE OR ENTER SITE ID AS NECESSARY; UP TO 9 ALPHANUMERIC CHARACTERS MAY BE USED
-CIRCLE FRACTIONS COLLECTED. ENTER DATE,TIME,FIELD DATA (IF REQUIRED), HAZARD CODE AND NOTES
-HAZARD CODES: I=IGNITABLE C=CORROSIVE R=REACTIVE T=TOXIC WASTE H=OTHER ACUTE HAZARD: IDENTIFY SPECIFICS IF KNOWN
PLEASE RETURN COMPLETED LOGSHEETS WITH SAMPLES TO Environmental Science & Engineering, Inc.

ELINQUISHED BY: (NAME/ORGANIZATION/DATE/TIME)	VIA:	REC'D BY (NAME/ORGANIZATION/DATE/TIME)
1 [illegible] 5 29-92/1700		Fed X
2		V Prem Dos ESE 5-30 1400
3		

SAMPLES TO BE SHIPPED? ___ IF YES, ANTICIPATED # ___ TO SHIP ON / /
SAMPLE CUSTODIAN: Custody Seals Intact? Y Samples Iced? Y Preservations Audited? N Problems? N

6°C

Environmental Science & Engineering 05-21-92 *** FIELD LOGSHEET *** FIELD GROUP: ALS2B
PROJECT NUMBER 3914042 0201 PROJECT NAME: JMM/ALAMEDA CTO-121 LAB COORD. JACKIE HARGROVE-ELLIOT

6/19

SE #	SITE/STA	HAZ?	FRACTIONS(CIRCLE)	DATE	TIME	PARAMETER LIST	DEPTH FEET
*63	B-05PS-09		SS SS SV SV			ALS2B.4	
*64	B-05PS-10		SS SS SV SV			ALS2B.5	
*65	B-05PS-10		SS SS SV SV			ALS2B.4	
*66	B-05PS-10		SS SS SV SV			ALS2B.4	
*67	B-05PS-10		SS SS SV SV			ALS2B.4	
*68	05PS-DUP1		SS SS SV SV			ALS2B.6	
*69	05PS-DUP2		SS SS SV SV			ALS2B.6	
*70	B-05PS-01		SS SS SV SV			ALS2B.5	
*71	B-05WT-01		SS SS SV SV			ALS2B.7	
*72	B-05WT-01		~~SS SS SV SV~~	~~5-28-92~~		ALS2B.8	
*73	B-05HW-02		SS SS SV SV	5.28.92	1526	ALS2B.7	0
*74	B-05HW-01		SS SS SV SV	5-28-92	1544	ALS2B.7	05
*75	B-05HW-02		SS SS SV SV	5.28.92	1603	ALS2B.7	10
*76	B-05HW-01		SS SS SV SV	5-28-92	1619	ALS2B.7	15
*77	B-05HW-01		SS SS SV SV	5-28-92	1640	ALS2B.8	0
*78	B-05HW-01		SS SS SV SV	5-28-92	1649	ALS2B.7	5'
*79	B-05HW-01		SS SS SV SV	5-28-92	1702	ALS2B.7	10'
*80	B-05HW-01		SS SS SV SV	5-28-92	1705	ALS2B.7	15'

NOTE -CHANGE OR ENTER SITE ID AS NECESSARY; UP TO 9 ALPHANUMERIC CHARACTERS MAY BE USED
-CIRCLE FRACTIONS COLLECTED. ENTER DATE,TIME,FIELD DATA (IF REQUIRED), HAZARD CODE AND NOTES
-HAZARD CODES: I=IGNITABLE C=CORROSIVE R=REACTIVE T=TOXIC WASTE H=OTHER ACUTE HAZARD; IDENTIFY SPECIFICS IF KNOWN
-PLEASE RETURN COMPLETED LOGSHEETS WITH SAMPLES TO Environmental Science & Engineering, Inc.

RELINQUISHED BY: (NAME/ORGANIZATION/DATE/TIME) VIA: REC'D BY (NAME/ORGANIZATION/DATE/TIME)

DFK/JMM/5-28-92/1750 Fed X

V Pham ESE 5-30 1400

SAMPLES TO BE SHIPPED? ___ IF YES, ANTICIPATED # ___ TO SHIP ON ___/___/___

Custody Seals Intact? Y Samples Iced? Y 6°C Preservations Audited? N Problems? N

Environmental Science & Engineering 05-21-92 *** FIELD LOGSHEET *** FIELD GROUP: ALS2B
PROJECT NUMBER [illegible]14042 0201 PROJECT NAME: JMM/ALAMEDA CTO-121 LAB COORD. JACKIE HARGROVE-ELLIOT

6/19

SF #	SITE/STA HAZ?	FRACTIONS(CIRCLE)	DATE	TIME	PARAMETER LIST	DEPTH FEET
*81	05HW-DUP1	SS SS SV SV	5-28-92		ALS2B.7	
*82	B-05BS-02	SS SS SV SV			ALS2B.7	
*83	M-05BS-01	SS SS SV SV	5-28-92	1218	ALS2B.8	0
*84	M-05BS-01	SS SS SV SV	5-28-92	1252	ALS2B.7	2.5
*85	M-05BS-01	SS SS SV SV	5-28-92	1303	ALS2B.7	06
*86	M-05BS-01	SS SS SV SV	5-28-92	1327	ALS2B.7	15

NOTE - CHANGE OR ENTER SITE ID AS NECESSARY; UP TO 9 ALPHANUMERIC CHARACTERS MAY BE USED
- CIRCLE FRACTIONS COLLECTED. ENTER DATE, TIME, FIELD DATA (IF REQUIRED), HAZARD CODE AND NOTES
- HAZARD CODES: I=IGNITABLE C=CORROSIVE R=REACTIVE T=TOXIC WASTE H=OTHER ACUTE HAZARD: IDENTIFY SPECIFICS IF KNOWN
PLEASE RETURN COMPLETED LOGSHEETS WITH SAMPLES TO Environmental Science & Engineering, Inc.

RELINQUISHED BY: (NAME/ORGANIZATION/DATE/TIME)	VIA:	REC'D BY (NAME/ORGANIZATION/DATE/TIME)
DEK /JMM/5-28-92/1750		FedX
		VPrem Ooo ESE 5-30 1400

SAMPLE: MORE SAMPLES TO BE SHIPPED? ___ IF YES, ANTICIPATED # ___ TO SHIP ON / /
SAMPLE CUSTODIAN: Custody Seals Intact? Y Samples Iced? Y Preservations Audited? N Problems? N

6°C

CTO - 121 Job No. _____

ALAMEDA NAVAL AIR STATION
SUMMARY OF SAMPLE SHIPMENT TO ESE

Page ___ of ___

	Sample I.D.	Depth (feet)	Sample Type (H2O/Soil)	ESE Sample No.	Type and No. of Containers	Date Sampled	Time
1	OSHW-DUP1	–	Soil	81	2-SS; 2-SV	5-28-92	–
2	M-BG-2	003		33			0920
3	BG-DUP1	–		43		5-28-92	–
4	M-BG 2	005		34			0927
5	M-OSHW-01	10		80			1702
6	M-OSHW-01	15		79			1705
7							
8							
9							
10							
11							
12							
13							
14							
15							
16							
17							
18							
19							
20							
21							
22							
23							
24							
25							
26							
27							
28							

TOTAL: 24

Cooler No.: 3 Fed. Express No.: 13820543

Date Shipped: 5-28-92 Completed By: DEK

Received by (ESE): V. Pham Oo Date Received: 5-30-92

Attach COC and include this form in each cooler.

Job No. 2738.0652

CTO - 121

ALAMEDA NAVAL AIR STATION
SUMMARY OF SAMPLE SHIPMENT TO ESE

Page ___ of ___

	Sample I.D.	Depth (feet)	Sample Type (H2O/Soil)	ESE Sample No.	Type and No. of Containers	Date Sampled	Time
1	M-BG3-	00	Soil	35	250 250	5-29-92	1115
2	M-BG3	02		36			1132
3	M-BG3	04		37			1139
4	M-BG3	06		38			1144
5	M-BG4	00		39			1426
6	M-BG4	02		40			1446
7	M-BG4	0.5		41			1512
8	M-BG4	10		42			1516
9							
10							
11							
12							
13							
14							
15							
16							
17							
18							
19							
20							
21							
22							
23							
24							
25							
26							
27							
28							
				TOTAL:	32		

Cooler No.: 1 Fed. Express No.: 138270535 4

Date Shipped: 5-29-92 Completed By: DEK

Received by (ESE): Pam Odd Date Received: 5-30-92

Attach COC and include this form in each cooler.

Job No. 2738 0562
0652

CTO - 14

ALAMEDA NAVAL AIR STATION
SUMMARY OF SAMPLE SHIPMENT TO ESE

	Sample I.D.	Depth (feet)	Sample Type (H2O/Soil)	ESE Sample No.	Type and No. of Containers	Date Sampled	Time
1	MB92-02	02	Soil	32	2SV - 2SS	5-28-92	0915
2	M-05HN-01	00	Soil	77	2SV, 2SS	5-28-92	1640
3	B-05HW-02	05	"	74	2SV, 2SS	"	1544
4	B-05HW-02	10	"	75	2SV, 2SS	"	1603
5	B-05HW-02	15	"	76	2SV 2SS	"	1619
6	B-05HW-02	00	↓	73	2SV 2SS	↓	1526
7							
8							
9							
10							
11							
12							
13							
14							
15							
16							
17							
18							
19							
20							
21							
22							
23							
24							
25							
26							
27							
28							
				TOTAL:	24		

Cooler No.: 1 Fed. Express No.: 1382705321

Date Shipped: 5-28-92 Completed By: DEK

Received by (ESE): Pam Oo Date Received: 5-30-92

Attach COC and include this form in each cooler.

Job No. 2738.0652

CTO - 121

ALAMEDA NAVAL AIR STATION
SUMMARY OF SAMPLE SHIPMENT TO ESE

Page ___ of ___

	Sample I.D.	Depth (feet)	Sample Type (H2O/Soil)	ESE Sample No.	Type and No. of Containers	Date Sampled	Time
1	M-05BS-01	15	Soil	86	2SV 2SS	5-27-92	1327
2	M-05BS-01	00		83			1218
3	M-05BS-01	06		85			1303
4	M-05HW-01	05		78			1649
5	M-05BS-01	2.5		84			1252
6	M-BG2	00		31			0852
7							
8							
9							
10							
11							
12							
13							
14							
15							
16							
17							
18							
19							
20							
21							
22							
23							
24							
25							
26							
27							
28							
				TOTAL:	24		

Cooler No.: 2 Fed. Express No.: 1382705332

Date Shipped: 5-28-92 Completed By: DEK

Received by (ESE): Pam Oda Date Received: 5-30-92

Attach COC and include this form in each cooler.

& Engineering 05-13-92 FIELD LOGSHEET *** FIELD GROUP: A 3

0201 PROJECT NAME: JMM/ALAMEDA CTO-121 LAB COORD. JACKIE HARGROVE-ELLIOT

6/19

		FRACTIONS(CIRCLE)	DATE	TIME	PARAMETER LIST
*1		WP			ALS2B.1
*		WP			ALS2B.1
*3		WP			ALS2B.1
*4		WP			ALS2B.1
*5		WP WP WP WP WP WP WP			ALS2B.1
*6		WP WP WP WP WP WP WP			ALS2B.1
*7		WP WP WP WP WP WP WP			ALS2B.1
*8		WP WP WP WP WP WP WP			ALS2B.1
*9		WP WP WP WP WP WP WP			ALS2B.1
*10		WP WP WP WP WP WP WP			ALS2B.1
*11		WP WP WP WP WP WP WP			ALS2B.1
*12		WP WP WP WP WP WP WP			ALS2B.1
*13		WP WP WP WP WP WP WP			ALS2B.1
14		(S)	6/2/92	1300	ALS2B.1
15		(S)	6/2/92	1300	ALS2B.1
*16		(S)	6/2/92	1300	ALS2B.1
*17		(S)	6/2/92	1300	ALS2B.1
*18		WP WP WP WP WP WP WP			ALS2B.1

ENTER SITE ID AS NECESSARY; UP TO 9 ALPHANUMERIC CHARACTERS MAY BE USED
ONS COLLECTED. ENTER DATE,TIME,FIELD DATA (IF REQUIRED), HAZARD CODE AND NOTES
I ABLE C=CORROSIVE R=REACTIVE T=TOXIC WASTE H=OTHER ACUTE HAZARD; IDENTIFY SPECIFICS IF KNOWN
COMPLETED LOGSHEETS WITH SAMPLES TO Environmental Science & Engineering, Inc.

NAME ORGANIZATION/DATE/TIME) VIA: REC'D BY (NAME/ORGANIZATION/DATE/TIME)

Colleen Moff ESM/6/2/92/1630 Fed X 6/2/92/1800

K. Erwin ESE 6/3 1300

BE SHIPPED? ___ IF YES, ANTICIPATED # ___ TO SHIP ON ___/___/___

y Seals Intact? Y Samples Iced? Y Preservations Audited? Y Problems? N

Environmental Science & Engineering 05-21-92 *** FIELD LOGSHEET *** FIELD GROUP: ALS2B
PROJECT NUMBER 3914042 0201 PROJECT NAME: JMM/ALAMEDA CTO-121 LAB COORD. JACKIE HARGROVE-ELLIOT

6/19

SE #	SITE/STA	HAZ?	FRACTIONS(CIRCLE)	DATE	TIME	PARAMETER LIST	DEPTH FEET
*63	B-05PS-[illegible]		SS SS SV SV			ALS2B.4	
*64	B-05PS-[illegible]		SS SS SV SV			ALS2B.5	
*65	B-05PS-10		SS SS SV SV			ALS2B.4	
*66	B-05PS-[illegible]		SS SS SV SV			ALS2B.4	
*67	B-05PS-[illegible]		SS SS SV SV			ALS2B.4	
*68	05PS-DUP[illegible]		SS SS SV SV			ALS2B.6	
*69	[illegible]5PS-DUP[illegible]		SS SS SV SV			ALS2B.6	
*70	B-05SP-[illegible]		SS SS SV SV	6/2/92	1315	ALS2B.5	0'
*71	B-05WT-01		SS SS SV SV			ALS2B.7	
*72	B-05WT-[illegible]		SS SS SV SV			ALS2B.8	
*73	B-[illegible]HW-01		SS SS SV SV			ALS2B.7	
*74	B-05HW-[illegible]		SS SS SV SV			ALS2B.7	
*75	B-[illegible]HW-[illegible]		SS SS SV SV			ALS2B.7	
*76	B-[illegible]HW-[illegible]		SS SS SV SV			ALS2B.7	
*77	B-[illegible]HW		SS SS SV SV			ALS2B.8	
*78	B-[illegible]HW		SS SS SV SV			ALS2B.7	
*79	B-[illegible]HW		SS SS SV SV			ALS2B.7	
*80	B-[illegible]HW		SS SS SV SV			ALS2B.7	

NOTES: SEARCH [illegible] ENTER SITE ID AS NECESSARY; UP TO 9 ALPHANUMERIC CHARACTERS MAY BE USED
SELECT FRACTIONS COLLECTED. ENTER DATE, TIME, FIELD DATA (IF REQUIRED), HAZARD CODE AND NOTES
HAZARD CODES: I-[illegible]TABLE C-CORROSIVE R-REACTIVE T-TOXIC WASTE H-OTHER ACUTE HAZARD; IDENTIFY SPECIFICS IF KNOWN
FINISH BY RETURNING COMPLETED LOGSHEETS WITH SAMPLES TO Environmental Science & Engineering, Inc.

RELINQUISHED BY: (NAME ORGANIZATION/DATE/TIME) VIA: REC'D BY (NAME/ORGANIZATION/DATE/TIME)

Colleen Moss/JMM/6/2/92/1630 FedX 6/2/92/1800

V Pham Da ESE 6-19 1300

SAMPLES TO BE SHIPPED? ___ IF YES, ANTICIPATED # ___ TO SHIP ON ___/___/___
SAMPLES RECEIVED BY: Custody Seals Intact? Y Samples Iced? Y Preservations Audited? N Problems? N

Environmental Science & Engineering 05-21-92 *** FIELD LOGSHEET *** FIELD GROUP: ALS2B
PROJECT NUMBER 3914042 0201 PROJECT NAME: JMM/ALAMEDA CTO-121 LAB COORD. JACKIE HARGROVE-ELLIOT

6/19

E #	SITE/STA	HAZ?	FRACTIONS(CIRCLE)	DATE	TIME	PARAMETER LIST	DEPTH FEET
*45	B-05PS-01		SS SS SV SV			ALS2B.5	
*46	B-05PS-01		SS SS SV SV			ALS2B.4	
*47	B-05PS-01		SS SS SV SV			ALS2B.4	
*48	B-05PS-02		SS SS SV SV	6/3/92	0900	ALS2B.5	0'
*49	B-05PS-02		SS SS SV SV	6/3/92	0915	ALS2B.4	5'
*50	B-05PS-03		SS SS SV SV	6/3/92	1045	ALS2B.5	0'
*51	B-05PS-03		SS SS SV SV	6/3/92	1110	ALS2B.4	5'
*52	B-05PS-04		SS SS SV SV	6/3/92	1215	ALS2B.4	0'
*53	B-05PS-04		SS SS SV SV	6/3/92	1250	ALS2B.5	5'
*54	B-05PS-05		SS SS SV SV	6/3/92	1545	ALS2B.5	0'
*55	B-05PS-05		SS SS SV SV	6/3/92	1620	ALS2B.4	5'
*56	B-05PS-06		SS SS SV SV			ALS2B.4	
*57	B-05PS-06		SS SS SV SV			ALS2B.5	
*58	B-05PS-07		SS SS SV SV			ALS2B.4	
*59	B-05PS-07		SS SS SV SV			ALS2B.5	
*60	B-05PS-08		SS SS SV SV			ALS2B.4	
*61	B-05PS-08		SS SS SV SV			ALS2B.5	
*62	B-05PS-09		SS SS SV SV			ALS2B.5	

NOTE -CHANGE OR ENTER SITE ID AS NECESSARY; UP TO 9 ALPHANUMERIC CHARACTERS MAY BE USED
-CIRCLE FRACTIONS COLLECTED. ENTER DATE,TIME,FIELD DATA (IF REQUIRED), HAZARD CODE AND NOTES
-HAZARD CODES: I UNSTABLE C=CORROSIVE R=REACTIVE T=TOXIC WASTE H=OTHER ACUTE HAZARD; IDENTIFY SPECIFICS IF KNOWN
-PLEASE RETURN COMPLETED LOGSHEETS WITH SAMPLES TO Environmental Science & Engineering, Inc.

[illegible]	NAME ORGANIZATION/DATE/TIME)	VIA:	REC'D BY (NAME/ORGANIZATION/DATE/TIME)
			V Prem Das ESE 6-4 1300

SAMPLER: MORE SAMPLES TO BE SHIPPED? ___ IF YES, ANTICIPATED # ___ TO SHIP ON ___ / ___ / ___
SAMPLE CUSTODIAN: Custody Seals Intact? Y Samples Iced? Y Preservations Audited? N Problems? Y

*5B-SS; one broke during shipping (WD)

Job No. 2738.0655

CTO - 121

ALAMEDA NAVAL AIR STATION
SUMMARY OF SAMPLE SHIPMENT TO ESE

	Sample I.D.	Depth (feet)	Sample Type (H2O/Soil)	ESE Sample No.	Type and No. of Containers	Date Sampled	Time
1	B-05PS-02	0	Soil	48	25S, 25V	6-3-92	0900
2	B-05PS-02	5	↑	49	↑	↑	0915
3	B-05PS-03	0		50			1045
4	B-05PS-03	5		51			11:10
5	B-05PS-04	0		52			12:15
6	B-05PS-04	5		53			12:50
7	B-05PS-05	0		54			1545
8	B-05PS-05	5	↓	55	↓	↓	1620
9							
10							
11							
12							
13							
14							
15							
16							
17							
18							
19							
20							
21							
22							
23							
24							
25							
26							
27							
				TOTAL:			

Cooler No.: 2 Fed. Express No.: 1382705391

Date Shipped: 6-3-92 Completed By: DEK

Received by (ESE): V. Pierson Date Received: 6-4-92

Attach COC and include this form in each cooler.

Environmental Science & Engineering 05-21-92 FIELD LOGSHEET *** FIELD GROUP: A
PROJECT NUMBER 914042 0201 PROJECT NAME: JMM/ALAMEDA CTO-121 LAB COORD. JACKIE HARGROVE-ELLIOT

6/19

E #	SITE/STA	HAZ?	FRACTIONS(CIRCLE)	DATE	TIME	PARAMETER LIST	DEPTH FEET
*27	M-BG1		SS SS SV SV			ALS2B.3	
*28	M-BG1		SS SS SV SV			ALS2B.3	
*29	M-BG1		SS SS SV SV			ALS2B.3	
*30	M-BG1		SS SS SV SV			ALS2B.3	
*31	M-BG2		SS SS SV SV			ALS2B.3	
*32	M-BG2		SS SS SV SV			ALS2B.3	
*33	M-BG2		SS SS SV SV			ALS2B.3	
*34	M-BG2		SS SS SV SV			ALS2B.3	
*35	M-BG2		SS SS SV SV			ALS2B.3	
*36	M-BG3		SS SS SV SV			ALS2B.3	
*37	M-BG3		SS SS SV SV			ALS2B.3	
*38	M-BG3		SS SS SV SV			ALS2B.3	
*39	M-BG4		SS SS SV SV			ALS2B.3	
*40	M-BG4		SS SS SV SV			ALS2B.3	
*41	M-BG4		SS SS SV SV			ALS2B.3	
*42	M-BG4		SS SS SV SV			ALS2B.3	
*43	BG-DUP		SS SS SV SV			ALS2B.3	
*44	E-05PS-01		SS SS SV SV	6/4/92	0855	ALS2B.4	0'

NOTE -CHANGE OR ENTER SITE ID AS NECESSARY; UP TO 9 ALPHANUMERIC CHARACTERS MAY BE USED
-CIRCLE FRACTIONS COLLECTED. ENTER DATE,TIME,FIELD DATA (IF REQUIRED), HAZARD CODE AND NOTES
-HAZARD CODES: I-IGNITABLE C-CORROSIVE R-REACTIVE T-TOXIC WASTE H-OTHER ACUTE HAZARD; IDENTIFY SPECIFICS IF KNOWN
-PLEASE RETURN COMPLETED LOGSHEETS WITH SAMPLES TO Environmental Science & Engineering, Inc.

RELINQUISHED BY: (NAME/ORGANIZATION/DATE/TIME)	VIA:	REC'D BY (NAME/ORGANIZATION/DATE/TIME)
1 Colleen Moff / JMM / 1600 / 6/92	FedX	1 6/4/92 / 1800
		V-Pun Oas ESE 6-5 1300
2		
3		

SHIPMENT: SAMPLES TO BE SHIPPED? ___ IF YES, ANTICIPATED # ___ TO SHIP ON ___/___/___
AIRBILL #: Custody Seals Intact? Y Samples Iced? Y Preservations Audited? N Problems? N

Environmental Science & Engineering 05-21-92 *** FIELD LOGSHEET *** FIELD GROUP: ALS2B
PROJECT NUMBER 7914042 0201 PROJECT NAME: JMM/ALAMEDA CTO-121 LAB COORD. JACKIE HARGROVE-ELLIOT

6/19

SE #	SITE/STA NAME	FRACTIONS(CIRCLE)	DATE	TIME	PARAMETER LIST	DEPTH FEET
*45	B-05PS-01	(SS) (SS) (SV) (SV)	6/4/92	0920	ALS2B.5	5'
*46	B-05PS-01	(SS) (SS) (SV) (SV)	6/4/92	1130	ALS2B.4	18'
*47	B-05PS-01	SS SS SV SV			ALS2B.4	
*48	B-05PS-02	SS SS SV SV			ALS2B.5	
*49	B-05PS-02	SS SS SV SV			ALS2B.4	
*50	B-05PS-03	SS SS SV SV			ALS2B.5	
*51	B-05PS-03	SS SS SV SV			ALS2B.4	
*52	B-05PS-04	SS SS SV SV			ALS2B.4	
*53	B-05PS-04	SS SS SV SV			ALS2B.5	
*54	B-05PS-05	SS SS SV SV			ALS2B.5	
*55	B-05PS-05	SS SS SV SV			ALS2B.4	
*56	B-05PS-06	SS SS SV SV			ALS2B.4	
*57	B-05PS-06	SS SS SV SV			ALS2B.5	
*58	B-05PS-07	SS SS SV SV			ALS2B.4	
*59	B-05PS-07	SS SS SV SV			ALS2B.5	
*60	B-05PS-08	SS SS SV SV			ALS2B.4	
*61	B-05PS-08	SS SS SV SV			ALS2B.5	
*62	B-05PS-09	SS SS SV SV			ALS2B.5	

NOTE -CHANGE OR ENTER SITE ID AS NECESSARY; UP TO 9 ALPHANUMERIC CHARACTERS MAY BE USED
-CIRCLE FRACTIONS COLLECTED. ENTER DATE,TIME,FIELD DATA (IF REQUIRED), HAZARD CODE AND NOTES
-HAZARD CODES: I=SUITABLE C=CORROSIVE R=REACTIVE T=TOXIC WASTE H=OTHER ACUTE HAZARD; IDENTIFY SPECIFICS IF KNOWN
-PLEASE RETURN COMPLETED LOGSHEETS WITH SAMPLES TO Environmental Science & Engineering, Inc.

RELINQUISHED BY: (NAME/ORGANIZATION/DATE/TIME) VIA: REC'D BY (NAME/ORGANIZATION/DATE/TIME)

1 Colleen Moore/JMM/6/4/92/800 FedX/6/4/92/1800

2 VPlem 000 ESE 6-5 1300

SAMPLES TO BE SHIPPED? ___ IF YES, ANTICIPATED # ___ TO SHIP ON ___/___/___
SAMPLE CONDITION: Custody Seals Intact? Y Samples Iced? Y Preservations Audited? N/A Problems? N

Environmental Science & Engineering 05-21-92 *** FIELD LOGSHEET *** FIELD GROUP: ALS2B
PROJECT NUMBER 3914042 0201 PROJECT NAME: JMM/ALAMEDA CTO-121 LAB COORD. JACKIE HARGROVE-ELLIOT

6/19

SE #	SITE/STA HAZ?	FRACTIONS(CIRCLE)	DATE	TIME	PARAMETER LIST	DEPTH FEET
*63	B-05PS-09	SS SS SV SV			ALS2B.4	
*64	B-05PS-10	SS SS SV SV			ALS2B.5	
*65	B-05PS-10	SS SS SV SV			ALS2B.4	
*66	B-05PS-10	SS SS SV SV			ALS2B.4	
*67	B-05PS-10	SS SS SV SV			ALS2B.4	
*68	05PS-DUP1	SS SS SV SV	6/4/92		ALS2B.6	
*69	05PS-DUP2	SS SS SV SV			ALS2B.6	
*70	[illegible]	SS SS SV SV			ALS2B.5	
*71	[illegible] WT [illegible]	SS SS SV SV	6/4/92	1445	ALS2B.7	10'
*72	[illegible] WT [illegible]	SS SS SV SV	6/4/92	1530	ALS2B.8	10'
*73	[illegible] HW [illegible]	SS SS SV SV			ALS2B.7	
*74	[illegible] HW-[illegible]	SS SS SV SV			ALS2B.7	
*75	[illegible] HW [illegible]	SS SS SV SV			ALS2B.7	
*76	[illegible] HW-[illegible]	SS SS SV SV			ALS2B.7	
*77	[illegible] HW-[illegible]	SS SS SV SV			ALS2B.8	
*78	M-[illegible]5HW-[illegible]	SS SS SV SV			ALS2B.7	
*79	M-[illegible]5HW-[illegible]	SS SS SV SV			ALS2B.7	
*80	M-[illegible]5HW-[illegible]	SS SS SV SV			ALS2B.7	

NOTE - CHANGE OR ENTER SITE ID AS NECESSARY; UP TO 9 ALPHANUMERIC CHARACTERS MAY BE USED
- CIRCLE FRACTIONS COLLECTED. ENTER DATE, TIME, FIELD DATA (IF REQUIRED), HAZARD CODE AND NOTES
- HAZARD CODES: I=IGNITABLE C=CORROSIVE R=REACTIVE T=TOXIC WASTE H=OTHER ACUTE HAZARD; IDENTIFY SPECIFICS IF KNOWN
- PLEASE RETURN COMPLETED LOGSHEETS WITH SAMPLES TO Environmental Science & Engineering, Inc.

RELINQUISHED BY: (NAME ORGANIZATION/DATE/TIME)	VIA:	REC'D BY (NAME/ORGANIZATION/DATE/TIME)
Colleen Moff / JMM / 6/4/92 / 1800	Fed X / 6/4/92 / 1800	
		√ From Doc ESE 6-5 1300

SAMPLES TO BE SHIPPED? ___ IF YES, ANTICIPATED # ___ TO SHIP ON ___/___/___
Custody Seals Intact? Y Samples Iced? Y Preservations Audited? N Problems? N

Environmental Science & Engineering 05-21-92 *** FIELD LOGSHEET *** FIELD GROUP: ALS2B
PROJECT NUMBER 3914042 0201 PROJECT NAME: JMM/ALAMEDA CTO-121 LAB COORD. JACKIE HARGROVE-ELLIOT

6/19

E #	SITE/STA HAZ?	FRACTIONS(CIRCLE)	DATE	TIME	PARAMETER LIST	DEPTH FEET
*81	05HW-DUP1	SS SS SV SV			ALS2B.7	
*82	M-05BS-02	SS SS SV SV	6/4/92	1440	ALS2B.7	0'
*83	M-05BS-01	SS SS SV SV			ALS2B.8	
*84	M-05BS-01	SS SS SV SV			ALS2B.7	
*85	M-05BS-01	SS SS SV SV			ALS2B.7	
*86	M-05BS-01	SS SS SV SV			ALS2B.7	

NOTE: CHANGE OR ENTER SITE ID AS NECESSARY; UP TO 9 ALPHANUMERIC CHARACTERS MAY BE USED
CIRCLE FRACTIONS COLLECTED. ENTER DATE,TIME,FIELD DATA (IF REQUIRED), HAZARD CODE AND NOTES
HAZARD CODES: I=IGNITABLE C=CORROSIVE R=REACTIVE T=TOXIC WASTE H=OTHER ACUTE HAZARD; IDENTIFY SPECIFICS IF KNOWN
PLEASE RETURN COMPLETED LOGSHEETS WITH SAMPLES TO Environmental Science & Engineering, Inc.

RELINQUISHED BY: (NAME/ORGANIZATION/DATE/TIME)	VIA:	REC'D BY (NAME/ORGANIZATION/DATE/TIME)
Colleen Morf / JMM / 6/4/92 / 1630	FedX	6/4/92 / 1800
		Plum Dco ESE 6-5 1300

SAMPLER: MORE SAMPLES TO BE SHIPPED? ___ IF YES, ANTICIPATED # ___ TO SHIP ON / /
SAMPLE CUSTODIAN: Custody Seals Intact? Y Samples Iced? Y Preservations Audited? N Problems? N

Job No. 2738-0655

CTO - ____

ALAMEDA NAVAL AIR STATION
SUMMARY OF SAMPLE SHIPMENT TO ESE

Page 1 of __

	Sample I.D.	Depth (feet)	Sample Type (H2O/Soil)	ESE Sample No.	Type and No. of Containers	Date Sampled	Time
1	B-05PS-01	0	Soil	44	2-SS, 2-SV	6/4/92	855
2		5		45	2-SS, 2-SV	6/4/92	920
3		18		46	2-SS, 2-SV	6/4/92	1130
4	05PS-D[illegible]			68	2-SS, 2-SV	6/4/92	
5	B-05WT-01	10		71	2-SS, 2-SV	6/4/92	1445
6	B-05WT-02	10		72	2-SS, 2-SV	6/4/92	1530
7	B-05BS-02	0		82	2-SS, 2-SV		1440
8							
9							
10							
11							
12							
13							
14							
15							
16							
17							
18							
19							
20							
21							
22							
23							
24							
25							
26							
27							
				TOTAL:			

Cooler No.: 20 Fed. Express No.: 1382705413

Date Shipped: 6/4/92 Completed By: Thomas Smith

Received by (ESE): [illegible] Date Received: 6-5-92

Attach COC and include this form in each cooler.

Wipes

...tal Science & Engineering 05-13-92 FIELD LOGSHEET *** FIELD GROUP: A... 3
PROJECT NUMBER ...0201 PROJECT NAME: JMM/ALAMEDA CTO-121 LAB COORD. JACKIE HARGROVE-ELLIOT

6/19

		FRACTIONS(CIRCLE)	DATE	TIME	PARAMETER LIST
*1		SS			ALS2B.1
*2		SS			ALS2B.1
*3		SS			ALS2B.1
*4		SS			ALS2B.1
*5		WP WP WP WP WP WP WP			ALS2B.1
*6		WP WP WP WP WP WP WP			ALS2B.1
*7		WP WP WP WP WP WP WP			ALS2B.1
*8		WP WP WP WP WP WP WP			ALS2B.1
*9		WP WP WP WP WP WP WP			ALS2B.1
*10		WP WP WP WP WP WP WP			ALS2B.1
*11		WP WP WP WP WP WP WP			ALS2B.1
*12		WP WP WP WP WP WP WP			ALS2B.1
*13		SS WP WP WP WP WP WP WP			ALS2B.1
*14		SS			ALS2B.1
*15		SS			ALS2B.1
*16		SS			ALS2B.1
*17		SS			ALS2B.1
*18		(WP)(WP)(WP)(WP)(WP)(WP)	6/2/92	1500	ALS2B.1/2 grab

...SITE ID AS NECESSARY; UP TO 9 ALPHANUMERIC CHARACTERS MAY BE USED
...COLLECTED. ENTER DATE,TIME,FIELD DATA (IF REQUIRED), HAZARD CODE AND NOTES
1 ...ABLE C-CORROSIVE R-REACTIVE T-TOXIC WASTE H-OTHER ACUTE HAZARD: IDENTIFY SPECIFICS IF KNOWN
...COMPLETED LOGSHEETS WITH SAMPLES TO Environmental Science & Engineering, Inc.

...NAME/ORGANIZATION/DATE/TIME)	VIA:	REC'D BY (NAME/ORGANIZATION/DATE/TIME)
Thomas Smith / JMM / 6/2/92 / 1630	Fed EX	6/2/92 / 1800
		V. Kain Oas / ESE 6-3 1300

...BE SHIPPED? ___ IF YES, ANTICIPATED # ___ TO SHIP ON ___/___/___
...by Seals Intact? Y Samples Iced? Y Preservations Audited? N Problems? N

Environmental Science & Engineering 05-13-92 *** FIELD LOGSHEET *** FIELD GROUP: ALS2B
PROJECT NUMBER: 4047.0201 PROJECT NAME: JMM/ALAMEDA CTO-121 LAB COORD. JACKIE HARGROVE-ELLIOT

	FRACTIONS (CIRCLE)	DATE	TIME	PARAMETER LIST
19	(WP) (WP) (WP) (WP) (WP) (WP) (WP)	6/2/92	1525	ALS2B.1 x2
20	(WP) (WP) (WP) (WP) (WP) (WP) (WP)	6/2/92	1600	ALS2B.1 x2
21	WP WP WP WP WP WP WP			ALS2B.1 grab
22	WP WP WP WP WP WP WP			ALS2B.1
23	WP WP WP WP WP WP WP			ALS2B.1
24	WP WP WP WP WP WP WP			ALS2B.1
25	WP WP WP WP WP WP WP			ALS2B.1
26	WP WP WP WP WP WP WP			ALS2B.1

6/19

CHANGE OR ENTER SITE ID AS NECESSARY; UP TO 9 ALPHANUMERIC CHARACTERS MAY BE USED
CIRCLE FRACTIONS COLLECTED. ENTER DATE, TIME, FIELD DATA (IF REQUIRED), HAZARD CODE AND NOTES
HAZARD CODES: I-ignitable C-corrosive R-reactive T-toxic waste H-other acute hazard; IDENTIFY SPECIFICS IF KNOWN
PLEASE RETURN COMPLETED LOGSHEETS WITH SAMPLES TO Environmental Science & Engineering, Inc.

RELINQUISHED BY: (NAME/ORGANIZATION/DATE/TIME)	VIA:	REC'D BY (NAME/ORGANIZATION/DATE/TIME)
Thomas Smith / JMM / 6/2/92 / 16:30	Fed Ex	6/2/92 / 1800
		w. Liem Oct ESE 6-3 1300

SAMPLES TO BE SHIPPED? ___ IF YES, ANTICIPATED # ___ TO SHIP ON ___/___/___
Custody Seals Intact? Y Samples Iced? Y Preservations Audited? AJ Problems? N

Environmental Science & Engineering 05-13-92 *** FIELD LOGSHEET *** FIELD GROUP: ALS2B
PROJECT NUMBER [illegible]4042 0201 PROJECT NAME: JMM/ALAMEDA CTO-121 LAB COORD. JACKIE HARGROVE-ELLIOT

6/19

L #	SITE STA HAZ	FRACTIONS(CIRCLE)	DATE	TIME	PARAMETER LIST
*19	W05-0[illegible]	WP WP WP WP WP WP WP			ALS2B.1
*20	W05-0[illegible]	WP WP WP WP WP WP WP			ALS2B.1
*21	W05-0[illegible]	WP WP WP WP WP WP WP	6/4/92	1140	ALS2B.2
*22	W05-0[illegible]	WP WP WP WP WP WP WP	6/4/92	1445	ALS2B.2
*23	W05-1[illegible]	WP WP WP WP WP WP WP			ALS2B.1
*24	W05-1[illegible]	WP WP WP WP WP WP WP			ALS2B.1
*25	W05-1[illegible]	WP WP WP WP WP WP WP			ALS2B.1
*26	W05-DU[illegible]	SS WP WP WP WP WP WP WP	6/4/92		ALS2B.2

NOTE: CHANGE OR ENTER SITE ID AS NECESSARY; UP TO 9 ALPHANUMERIC CHARACTERS MAY BE USED
CIRCLE FRACTIONS COLLECTED. ENTER DATE,TIME,FIELD DATA (IF REQUIRED), HAZARD CODE AND NOTES
HAZARD CODES: I=IGNITABLE C=CORROSIVE R=REACTIVE T=TOXIC WASTE H=OTHER ACUTE HAZARD; IDENTIFY SPECIFICS IF KNOWN
PLEASE RETURN COMPLETED LOGSHEETS WITH SAMPLES TO Environmental Science & Engineering, Inc.

RELINQUISHED BY: NAME ORGANIZATION/DATE/TIME)	VIA:	REC'D BY (NAME/ORGANIZATION/DATE/TIME)
[illegible] 6/4/92		Fed EX 6/4/92 1800
		V Prem DOD ESE 6-5 1300

SCHEDULE: MORE SAMPLES TO BE SHIPPED? ___ IF YES, ANTICIPATED # ___ TO SHIP ON / /
SAMPLE [illegible]: Custody Seals Intact? Y Samples Iced? Y Preservations Audited? N Problems? N

CTO - 121 Mod1 Job No. 2738.0655

ALAMEDA NAVAL AIR STATION
SUMMARY OF SAMPLE SHIPMENT TO ESE

	Sample I.D.	Depth (feet)	Sample Type (H2O/Soil)	ESE Sample No.	Type and No. of Containers	Date Sampled	Time
1	B-05PS-01	\	H2O	#13	1-B, 1-C, 1-F	6/4/92	1300
2	B-05PS-Dup			#23	4-VP		
3							
4							
5							
6	W05-08	\	Surface	#21	7-WP	6/4/92	1140
7	W05-09			#22	7-WP	6/4/92	1445
8							
9							
10	B-05WT-01		H2O	#24	1-B, 1-C, 1-F	6/4/92	1545
11	B-05WT-02		"	#25	4-VP, 3-MS	"	1600
12							
13							
14							
15							
16							
17							
18							
19							
20							
21							
22							
23							
24							
25							
26							
27							
				TOTAL:			

Cooler No.: 21 Fed. Express No.: 1382705424

Date Shipped: 6/4/92 Completed By: Thomas Smith

Received by (ESE): [signature] Date Received: 6-5-92

Attach COC and include this form in each cooler.

Environmental Science & Engineering 05-13-92 FIELD LOGSHEET *** FIELD GROUP: A... 6/19
PROJECT NUMBER: [illegible]0201 PROJECT NAME: JMM/ALAMEDA CTO-121 LAB COORD. JACKIE [illegible]

SEQ #	FIELD STA. NAME	FRACTIONS (CIRCLE)	DATE	TIME	PARAMETER LIST
*1	W14-01	SS	6-9-92	1215	ALS2B.1
*2	W14-02	SS		1230	ALS2B.1
*3	W14-03	SS		1240	ALS2B.1
*4	W14-04	SS		1300	ALS2B.1
*5	W14-05	WP WP WP WP WP WP WP		1300	ALS2B.1 2
*6	W14-06	WP WP WP WP WP WP WP		1340	ALS2B.
*7	W14-07	WP WP WP WP WP WP WP		1400	ALS2B.
*8	W14	WP WP WP WP WP WP WP		1410	ALS2B.
*9	W14	WP WP WP WP WP WP WP		1425	ALS2B.
*10	W14-11	WP WP WP WP WP WP WP		1430	ALS2B.
*11	W14-12	WP WP WP WP WP WP WP		1500	ALS2B.
*12	W14-13	WP WP WP WP WP WP WP		1510	ALS2B.
*13	W14 DUP	SS WP WP WP WP WP WP WP		—	ALS2B.2
*14	W05-01	SS			ALS2B.1
*15	W05-02	SS			ALS2B.1
*16	W05-03	SS			ALS2B.1
*17	W05-04	SS			ALS2B.1
*18	W [illegible]	WP WP WP WP WP WP WP			ALS2B.2

NOTE -CHANGE OR ENTER SITE ID AS NECESSARY; UP TO 9 ALPHANUMERIC CHARACTERS MAY BE USED
-CIRCLE FRACTIONS COLLECTED. ENTER DATE, TIME, FIELD DATA (IF REQUIRED), HAZARD CODE AND NOTES
-HAZARD CODES: I-IGNITABLE C-CORROSIVE R-REACTIVE T-TOXIC WASTE H-OTHER ACUTE HAZARD; IDENTIFY SPECIFICS IF KNOWN
-PLEASE RETURN COMPLETED LOGSHEETS WITH SAMPLES TO Environmental Science & Engineering, Inc.

RELINQUISHED BY: (NAME/ORGANIZATION/DATE/TIME)	VIA:	REC'D BY (NAME/ORGANIZATION/DATE/TIME)
1		V. Prem ODESE 6-19 1300
2		
3		

SAMPLER: MORE SAMPLES TO BE SHIPPED? ___ IF YES, ANTICIPATED # ___ TO SHIP ON ___/___/___
SENDER: Custody Seals Intact? Y Samples Iced? Y Preservations Audited? N [illegible] N

Environmental Science & Engineering 05-13-92 *** FIELD LOGSHEET *** FIELD GROUP: ALS2B 6/19

PROJECT NUMBER: [illegible] 0201 PROJECT NAME: JMM/ALAMEDA CTO-121 LAB COORD. JACKIE [illegible]

E #	FIELD SITE ID	QA/QC?	FRACTIONS(CIRCLE)	DATE	TIME	PARAMETER LIST
*19	MW5-08		WP WP WP WP WP WP WP			ALS2B.2
*20	MW5-07		WP WP WP WP WP WP WP			ALS2B.1
*21	MW5-06		WP WP WP WP WP WP WP			ALS2B.1
*22	MW5-09		WP WP WP WP WP WP WP			ALS2B.1
*23	MW5-10		WP WP WP WP WP WP WP	6-9-92	1000	ALS2B.1
*24	MW5-11		WP WP WP WP WP WP WP		1030	ALS2B.1
*25	MW5-12		WP WP WP WP WP WP WP		1100	ALS2B.1
*26	MW5-100		SS WP WP WP WP WP WP WP			ALS2B.1

NOTE - CHANGE OR ENTER SITE ID AS NECESSARY; UP TO 9 ALPHANUMERIC CHARACTERS MAY BE USED
CIRCLE FRACTIONS COLLECTED. ENTER DATE,TIME,FIELD DATA (IF REQUIRED), HAZARD CODE AND NOTES.
HAZARD CODES: I=IGNITABLE C=CORROSIVE R=REACTIVE T=TOXIC WASTE H=OTHER ACUTE HAZARD; IDENTIFY SPECIFICS IF KNOWN
PLEASE RETURN COMPLETED LOGSHEETS WITH SAMPLES TO Environmental Science & Engineering, Inc.

LINQUISHED BY (NAME/ORGANIZATION/DATE/TIME)	VIA:	REC'D BY (NAME/ORGANIZATION/DATE/TIME)
1		V-Plex Ops ESE 6-19 1300
2		

SAMPLER: MORE SAMPLES TO BE SHIPPED? ___ IF YES, ANTICIPATED # ___ TO SHIP ON ___/___/___
SAMPLE [illegible]: Custody Seals Intact? Y Samples Iced? Y Preservations Audited? N [illegible] N

JMM James M. Montgomery

BY DATE CLIENT SHEET OF

CHKD. BY DESCRIPTION JOB NO.

ESE #	Station	Fraction	Date	Time	Parameter
1	W04-03	SS	6-6-92	1215	ALS23
2	W04-04	SS		1230	
3	W04-05	SS		1240	
4	W04-06	SS		1300	
5	W04-07	WP WP WP WP WP WP WP		1320	
6	W04-08	WP WP WP WP WP WP WP		1340	
7	W04-09	WP WP WP WP WP WP WP		1400	
8	W04-10	WP WP WP WP WP		1410	
9	W04-11	WP WP WP WP WP		1425	
10	W04-12	WP WP WP WP WP		1430	
11	W04-13	WP WP WP WP WP		1500	
12	W04-14	WP WP WP WP WP		1510	
13	W04-DUP	WP WP WP WP WP WP WP		~~1520~~	
23	W05-10	WP WP WP WP WP WP WP		1000	
24	W05-11	WP WP WP WP WP WP WP		1030	
25	W05-12	WP WP WP WP WP WP WP		1100	

Relinquished By Via Rec'd By