M60050.000193
MCAS EL TORO
SSIC # 5090.3

STRATA Technologies Inc.

AV-FR-90/9195R
Project 50233D

SOLID WASTE AIR QUALITY ASSESSMENT TEST REPORT
UNITED STATES MARINE CORPS AIR STATION
EL TORO, CALIFORNIA
MAGAZINE ROAD LANDFILL
INACTIVE DISPOSAL SITE

Prepared for

James M. Montgomery, Consulting Engineers, Inc.
365 Lennon Lane
Walnut Creek, California 94598

Feburary 1991

An AeroVironment Company
222 East Huntington Drive • Monrovia, California 91016 • U.S.A.
Telephone 818/357-9023 • Telex 467 121, AEROVIR-C1 • FAX 818/359-9628

AV-FR-90/9195R
Project 50233D

SOLID WASTE AIR QUALITY ASSESSMENT TEST REPORT
UNITED STATES MARINE CORPS AIR STATION
EL TORO, CALIFORNIA
MAGAZINE ROAD LANDFILL
INACTIVE DISPOSAL SITE

Prepared for

James M. Montgomery, Consulting Engineers, Inc.
365 Lennon Lane
Walnut Creek, California 94598

By

Strata Technologies, Inc.
222 E. Huntington Drive
Monrovia, California 91016

P.O. Box 5031
Monrovia, California 91017-7131

Mr. Allan G. Campbell
Project Manager

February 1991

PREAMBLE

This Air Quality Assessment Test (SWAT) Report for the Magazine Road Landfill at Marine Corps Air Station (MCAS) El Toro has been prepared within the context of the Navy Installation Restoration Program (IRP). This program is designed in part, to evaluate and remediate, if necessary, contamination caused by hazardous substances, pollutants, or contaminants, pursuant to the Comprehensive Environmental Response, Compensation, and Liability Act (CERCLA) of 1980, as amended by the Superfund Amendments and Reauthorization Act (SARA) of 1986.

This document is intended to satisfy a portion of the remedial investigation phase of the IRP, as well as the substantive requirements of Assembly Bill (3374), the Calderon Bill, which has been identified as an applicable or relevant and appropriate requirement (ARAR) pursuant to Section 121 of CERCLA.

EXECUTIVE SUMMARY

In May and June 1990, Strata Technologies, Inc. (STRATA), a wholly owned subsidiary of AeroVironment Inc., conducted a Solid Waste Air Quality Assessment Test as required by Assembly Bill 3374 (Calderon) at the Magazine Road Landfill, U.S. Marine Corps Air Station, El Toro, California. During the field program, five landfill gas samples, one integrated surface sample, fourteen integrated air samples, and two migration gas samples were collected and analyzed for specific chemical compounds.

The landfill gas collected from the inactive Magazine Road Landfill contained seven of the Attachment 1 compounds in concentrations above the minimum detection limits determined by the California Air Resources Board for reporting purposes (DLRs). Attachment 1 compounds were detected in all of the samples collected. They included dichloromethane ($MeCl_2$), chloroform, benzene, trichloroethene (TCE), and tetrachloroethene (PCE). Benzene was the most commonly detected Attachment 1 compound, being present in all of the samples collected. The landfill gas contained 2.3 to 45 percent by volume ($\%_v$) methane and 19 to 35$\%_v$ carbon dioxide. The air immediately above the landfill surface contained 2.9 parts per million by volume (ppm_v) total organic compounds.

The ambient air samples collected at the Magazine Road Landfill contained three of the Attachment 1 compounds in concentrations above their respective DLRs. The compounds detected included $MeCl_2$, 1,1,1-trichloroethane (TCA), and PCE. $MeCl_2$ and PCE were also detected at near DLR concentrations in presampling equipment blanks.

The concentration of total organic compounds (TOC) exceeded its DLR (2 ppm_v) at all of the migration gas sample locations. The concentration of TOC in these samples ranged from 5.0 ppm_v to 2.5 $\%_v$. The TOC concentration was greatest in the sample collected from the southeastern side of the landfill.

TABLE OF CONTENTS

		Page
Executive Summary		iii
1.	INTRODUCTION	1-1
1.1	Background	1-1
1.2	Site Location	1-1
1.3	Site Description	1-3
1.4	Site Access	1-3
1.5	Air SWAT Classification	1-3
1.6	Contents of the Report	1-5
2.	PHYSICAL SITE CHARACTERISTICS	2-1
2.1	Geology	2-1
2.2	Regional Climatology	2-1
3.	GAS STREAM CHARACTERIZATION	3-1
3.1	Landfill Gas Test	3-1
	3.1.1 Overview of the Monitoring Program	3-1
	3.1.2 Landfill Gas Sample Collection	3-1
	3.1.3 Results	3-6
	3.1.4 Discussion	3-9
3.2	Integrated Surface Sample	3-10
	3.2.1 Integrated Surface Sample Collection	3-10
	3.2.2 Results	3-13
4.	AMBIENT AIR MONITORING	4-1
4.1	Overview of the Monitoring Program	4-1
4.2	Integrated Ambient Air Sample Collection	4-1
4.3	Results	4-3
4.4	Discussion	4-7
5.	GAS MIGRATION TESTING	5-1
5.1	Overview of the Monitoring Program	5-1
5.2	Migration Gas Sample Collection	5-1
5.3	Results	5-1
6.	WIND MONITORING	6-1
6.1	Overview of Monitoring Program	6-1
6.2	Measurement of Wind Speed and Direction	6-1
6.3	Results	6-2

TABLE OF CONTENTS (continued)

		Page
7.	ANALYTICAL METHODS	7-1
8.	QUALITY ASSURANCE SUMMARY	8-1
	8.1 Quality Assurance Objectives	8-1
	8.1.1 Analytical Detection Limits	8-1
	8.1.2 Accuracy	8-1
	8.1.3 Precision	8-7
	8.1.4 Completeness	8-8
	8.2 Additional Laboratory Quality Control Studies	8-10
9.	DATA REDUCTION, VALIDATION, AND STORAGE	9-1
	9.1 Field Data	9-1
	9.2 Laboratory Data	9-1
10.	REFERENCES	10-1

APPENDICES

A Photographs
B Laboratory Quality Control Studies
C Field Sample Documentation
D Laboratory Data Reports
E Screening Questionnaire

LIST OF FIGURES

		Page
1-1	Site Location Map	1-2
1-2	Magazine Road Landfill Site Map	1-4
2-1	Geologic Map	2-2
2-2	Normal Wind Flow Pattern & Average Wind Speeds: July 1500 PST	2-5
2-3	Normal Wind Flow Pattern & Average Wind Speeds: July 0200 PST	2-6
2-4	Wind Rose for Preliminary Meteorological Survey at Magazine Road Landfill	2-8
2-5	Wind Rose (0100-0500) for Preliminary Meteorological Survey at Magazine Road Landfill	2-9
3-1	Magazine Road Landfill Sampling Locations	3-2
3-2	Gas Sampling Probe Design	3-5
3-3	Probe Sampling System	3-7
3-4	Walking Pattern For Integrated Surface Sample Collection	3-12
4-1	Integrated Ambient Air Sampling System	4-4

LIST OF TABLES

		Page
2-1	Wind Data from El Toro	2-7
3-1	Landfill Gas Probe Installation and Sample Collection	3-3
3-2	Attachment 1 Compounds	3-4
3-3	Landfill Gas Sample Results	3-8
3-4	Integrated Surface Sample Collection	3-11
4-1	Integrated Ambient Air Sample Collection	4-2
4-2	Integrated Ambient Air Sample Results	4-5
5-1	Migration Gas Probe Installation and Sample Collection	5-2
5-2	Migration Gas Sample Results	5-3
6-1	Wind Speed Hourly Averages	6-3
6-2	Wind Direction Hourly Averages	6-4
6-3	Average Wind Speeds for the Sampling Periods	6-5
7-1	Analytical Method Summary	7-3
8-1	Summary of QA Objectives	8-2
8-2	Ambient Air Presampling Equipment Blank Results	8-4
8-3	Field Quality Control Results	8-5
8-4	Sample Flow Rates and Final Canister Pressures	8-9

Section 1

INTRODUCTION

1.1 BACKGROUND

In 1984, the California State Government enacted Assembly Bill (AB) 3525 (Calderon), which defined the ambient air testing requirements for disposal sites in California. In response to the passage of AB 3525, the California Air Pollution Control Officers Association (CAPCOA) and the California Air Resources Board (ARB) began to develop testing and evaluation guidelines for test reports to be submitted pursuant to the statute. In September 1986, the governor signed AB 3374 (Calderon), which made modifications to AB 3525. The new Calderon Bill requires all active disposal sites to conduct tests and measurements to determine the composition of landfill gases, to test for the presence of specified chemical compounds in the ambient air, and to determine whether off-site subsurface migration of landfill gas is occurring. For inactive sites, a screening questionnaire is completed to determine whether or not Calderon testing is required at the site. As part of the new statute, the ARB was directed to develop, in consultation with the air pollution control districts, guidelines to implement the new statute. Several agencies, including the ARB, CAPCOA, the California Waste Management Board, the California Water Resources Control Board, and the Government Refuse Collection and Disposal Association, assembled and published "Testing Guidelines for Active Solid Waste Disposal Sites" in December 1986. The guidelines specified the chemical compounds to be tested and identified acceptable sampling, analytical and reporting methods to fulfill the Calderon Bill requirements.

James M. Montgomery Consulting Engineers, Inc., contracted Strata Technologies, Inc. (STRATA), a subsidiary of AeroVironment Inc., to fulfill the Calderon requirements for the inactive Magazine Road Landfill. In May 1988, the U.S. Marine Corps submitted a Solid Waste Air Quality Assessment Test (Air SWAT) Proposal for the site to the South Coast Air Quality Management District (SCAQMD) for approval. The proposal presented methods for sample collection, handling and analysis, as well as procedures for data validation and reporting. Following approval by the SCAQMD, STRATA conducted the field sampling. This Air SWAT Report discusses the field methods and sampling equipment employed and the analytical results for the Magazine Road Landfill.

1.2 SITE LOCATION

The Marine Corps Air Station in El Toro (MCAS-El Toro) is located in Orange County approximately 45 miles southeast of Los Angeles, in the City of El Toro (Figure 1-1.) The site occupies the southern half of the El Toro quadrangle. The inactive Magazine Road Landfill is located in the northeast quarter of the northeast quarter of Section 10, Township 6 south, Range 8 west, San Bernardino Baseline and Meridian.

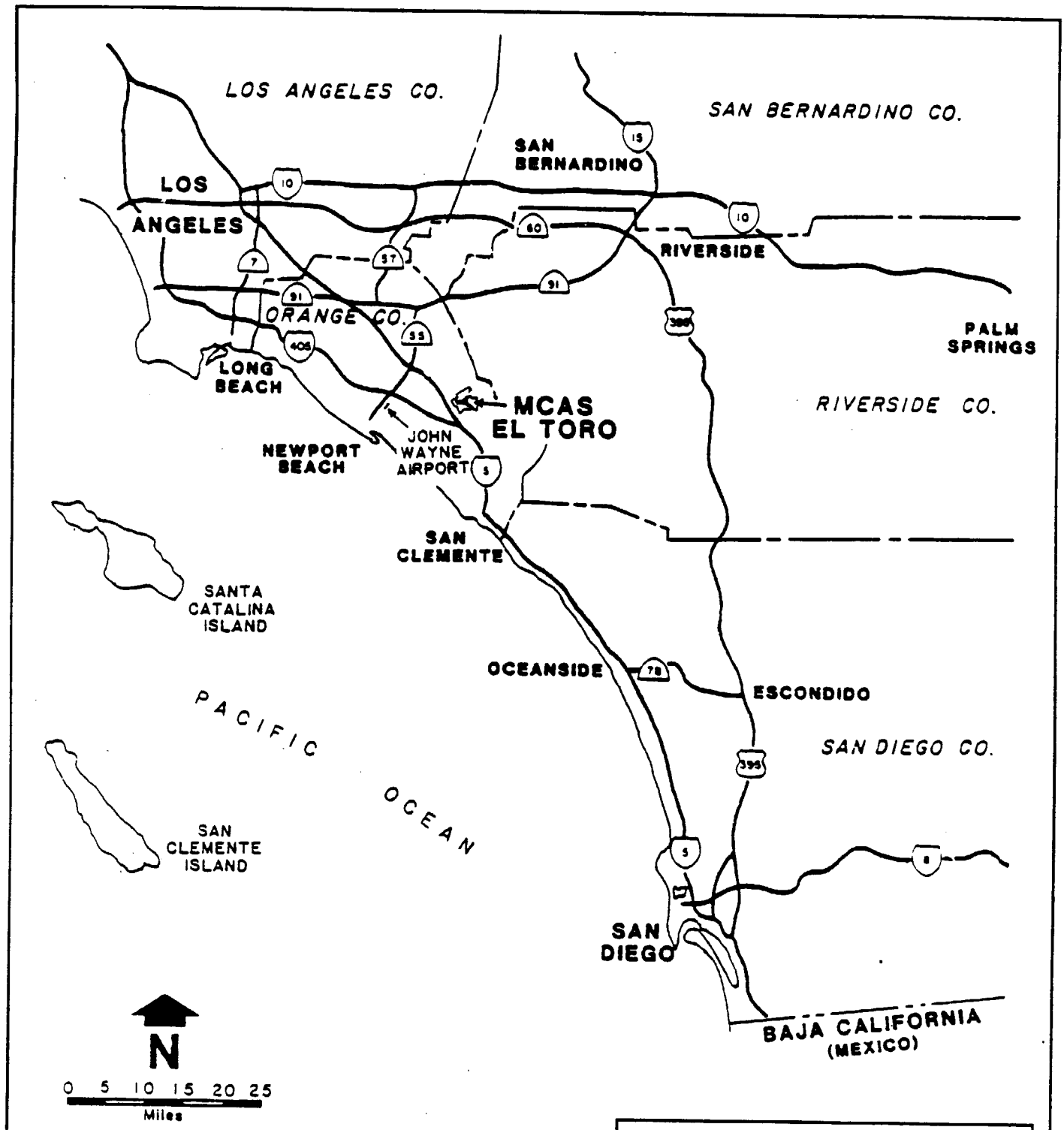

FIGURE 1–1.

Site location map
MCAS El Toro, California

by
Strata Technologies, Inc.

REFERENCE: B.C. 1986.

1.3 SITE DESCRIPTION

The Magazine Road Landfill is owned by MCAS-El Toro and was in operation from 1960 through 1980. The landfill is located in a borrow pit between two intermittent tributaries of Borrego Canyon Wash. The sand and gravel in the borrow area were removed and used as aggregate for concrete and gravel roads. The pit that was created by removing the gravel was filled with waste.

This landfill received all of the base's solid wastes and some liquid wastes. Unlike most other landfills on the Station, the wastes at this site were not burned. Wastes included municipal wastes, solvents, lead batteries, hydraulic oil, petroleum-based lubricants, paint residue, fuel, and possibly electrical transformers (James M. Montgomery, 1987). There are no records of septage waste being disposed of at this site. There are no evaporation ponds on site. The overall volume of waste disposed of at this site is estimated to be between 800,000 and 1,000,000 cubic yards. The total depth of the waste is unknown. The final cover, visible from the surface, appears to be composed of native soil. The total landfill area is approximately 22 acres. Its location is fairly well defined by aerial photographic studies; however, the locations of the landfill perimeter is somewhat uncertain. Before any field sampling was conducted for this project, STRATA conducted a ground-penetrating radar survey to identify the perimeter of the landfill.

Borrego Canyon Wash forms a Y at the toe of the Magazine Road Landfill (Figure 1-2). The western fork of the wash roughly parallels the western perimeter of the landfill. A small dirt road runs along the southern and eastern edge of the landfill. A man-made excavation is evident on the northeastern end of the landfill, and a man-made channel runs from this excavation to the eastern fork of Borrego Canyon Wash. There are inhabited buildings used for Station personnel offices and/or storage approximately 100 feet away from the western end of the landfill.

Neither liners nor a gas-venting system have been used at this landfill. No previous gas testing data are available for the site.

1.4 SITE ACCESS

The Magazine Road Landfill was never open to the public. Station personnel, including Station residents, used the landfill for general waste disposal. It was also used for the industrial wastes produced during Station operations. Access to the Station and to the landfill must be coordinated through the Station military police and environmental engineering division at MCAS-El Toro.

1.5 AIR SWAT CLASSIFICATION

In accordance with the ARB guidelines and a review meeting with the SCAQMD, the landfill has been classified as a Category I landfill because there are inhabited buildings within 1,000 feet of the site perimeter.

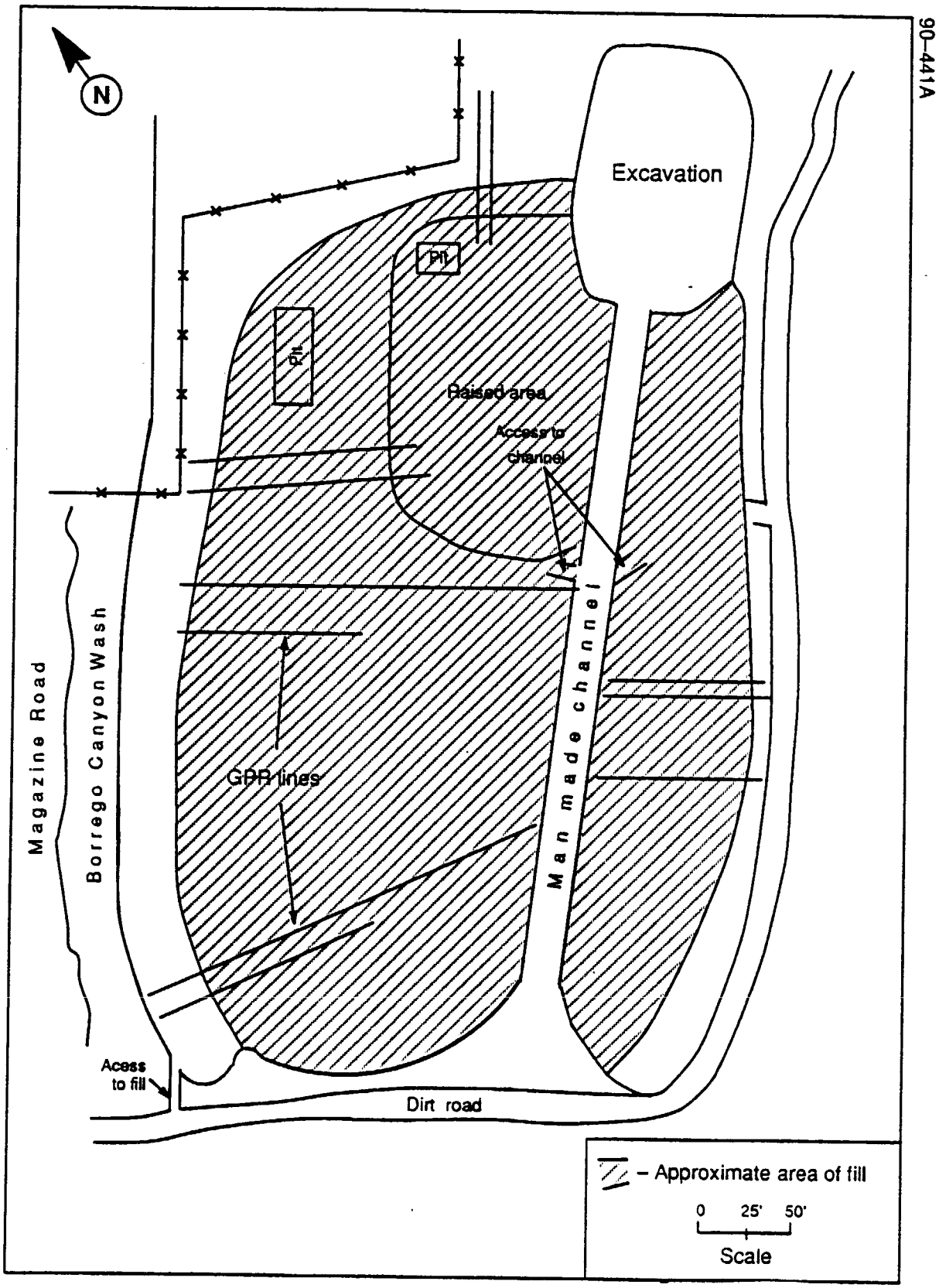

FIGURE 1-2. Magazine Road Landfill Site Map.

1.6 CONTENTS OF THE REPORT

Section 2 describes the geology and meteorology of the Magazine Road Landfill area. Sections 3, 4, 5 and 6 review the field sampling and monitoring program and analytical results for gas stream characterization, ambient air testing, gas migration, and wind monitoring, respectively. Section 7 describes the analytical methods used throughout the program; Section 8 discusses the quality assurance program and results; and Section 9 presents the data reduction, validation, and storage procedures. Section 10 lists the references cited in the report. Appendix A contains photographs that document sampling methods and locations; Appendix B presents the results of three laboratory quality control studies; Appendix C contains the field sample documentation; Appendix D contains the laboratory data reports; and Appendix E contains copies of the inactive site questionnaire and communications with the SCAQMD.

Section 2

PHYSICAL SITE CHARACTERISTICS

In order to better understand the factors controlling subsurface gas migration and the movement of landfill emissions in ambient air, the geology and meteorology of the Magazine Road Landfill area are discussed in the following sections.

2.1 GEOLOGY

The inactive Magazine Road Landfill lies at the boundary of the Tustin Plain and the Santa Ana Mountains. The Tustin Plain is the southernmost extension of the central plain of the Los Angeles Basin. The Santa Ana Mountains are a member of the northwest-trending peninsular ranges. The landfill is situated at the mouth of Borrego Canyon, flanked by foothills of the Santa Ana Mountains.

The surficial alluvium of the Tustin Plain comprises a series of coalescing alluvial fans derived from the Santa Ana Mountains and, to a lesser extent, the San Joaquin Hills. This alluvial mantle is underlain by a thick section of Tertiary strata that overlie Jurassic metamorphic and igneous rocks.

The Santa Ana Mountains are a southwest-tilted range with a central core composed of Mesozoic plutonic igneous rocks of the Southern California Batholith. This central core is overlain by an extensive section of Mesozoic through Cenozoic sedimentary rocks. The hills adjacent to the landfill are composed of Tertiary sandstones, siltstones, and shales (Figure 2-1). The landfill is situated on recent alluvium derived from Borrego Canyon.

A northwest-trending fault is exposed in the hills immediately to the west of the landfill. A second fault is located approximately 500 feet northeast of the landfill site. This fault juxtaposes the undifferentiated Vaqueros and Sespe Formation with the Niguel Formation. The fault passes beneath the recent alluvium in Borrego Canyon (Morton and Miller, 1981).

The U.S. Department of Agriculture Soil Conservation Service (1978) identified the Metz loamy sand and unconsolidated alluvium as the soil types at this site. The Metz soil series occurs on flood plains and alluvial fans in the area. These soils are likely to present a permeable pathway for gas migration.

2.2 REGIONAL CLIMATOLOGY

The climate of California is largely influenced by the presence of the Pacific High, a semipermanent high pressure system characterized by divergence of its eastern edge. The divergence allows air aloft to subside, becoming relatively warm and dry, thus producing clear skies and low humidities. Also, due to the subsiding air, persistent temperature inversions are common.

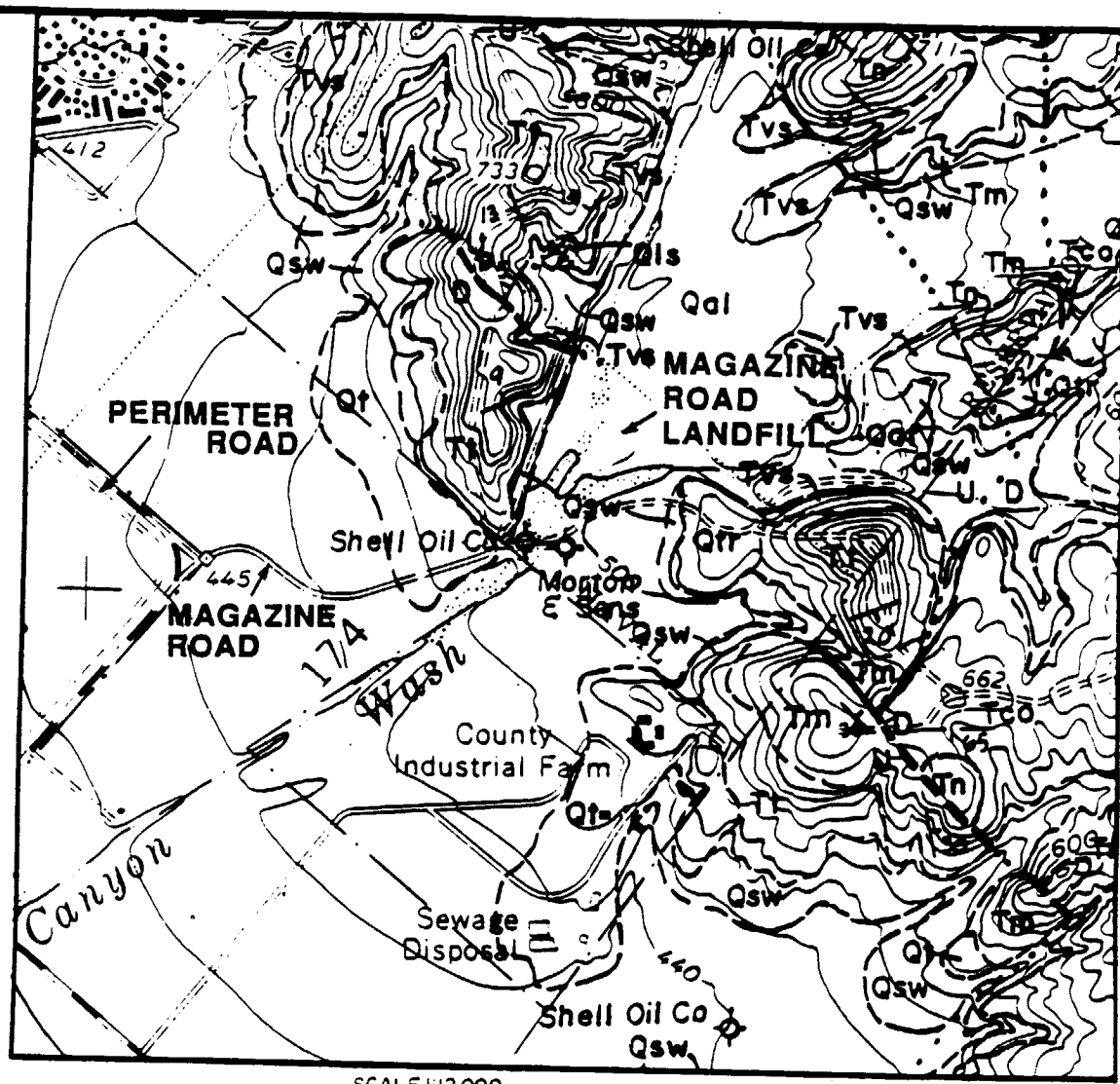

SCALE 1:12,000

0 0.5 1 MILE

500 0 500 1000 2000 3000 3500 FEET

0 0.5 1 KILOMETER

CONTOUR INTERVAL 20 FEET
DATUM IS MEAN SEA LEVEL

LEGEND:

Qal	Quaternary Younger Alluvium
Qsw	Quaternary Slope Wash
Qtr	Quaternary Terrace Deposits
Qls	Quaternary Landslides
Tn	Tertiary Niguel Formation
Tm	Tertiary Monterey Formation
Tt	Tertiary Topanga Formation
Tvs	Tertiary Vaqueros and Sespe Formation Undifferentiated
⊕	Exploratory Petroleum Hole

N

FIGURE 2-1.

GEOLOGIC MAP
MAGAZINE ROAD LANDFILL
MCAS EL TORO, CA

REFERENCE: CALIFORNIA DIVISION OF MINES & GEOLOGY SPECIAL REPORT 110, 1974.

During the summer there is little precipitation, as the Pacific High blocks extratropical storms from entering California. During this season, the high produces predominantly northwesterly flow over the California coastal waters. The northwesterly flow is modified by coastal mountains and other inland topographical features so that wind direction is the product of local terrain rather than the prevailing circulation. By winter, the high has moved southward, allowing for cooler temperatures, frontal passages, rainfall, and weaker and less persistent northwesterly flow along the California coast.

During the winter, Santa Ana conditions are common in Southern California. These north or northeasterly winds occur when a large high pressure system builds over the Great Basin area of Utah and Nevada and spreads southward over the the Southeast Desert Basin of California. These winds can persist from several hours to a few days and can reach sustained speeds of up to 60 miles per hour.

o **Local Climatology**

The climate of the El Toro area is classified as mid-latitude dry summer (Trewartha, 1968). This climatic type is characterized by a winter maximum in precipitation, a high percentage of sunshine, and a relatively small diurnal and seasonal temperature range. A major influence on the climate of the area is the land/sea breeze circulation, which shows a seasonal variation. During the summer, the intense heating of the inland deserts induces a thermal low or heat trough responsible for an onshore pressure gradient (onshore flow or sea breeze). Drainage flow (land breeze) becomes almost nonexistent. By winter, the sea breeze becomes weaker and of shorter duration, while the land breeze persists longer during the day.

Along the coastal areas of Southern California, the sea breeze moderates warm summer days. Average maximum temperatures may vary by as much as 20 degrees Fahrenheit (°F) from the coast to the inland areas during the month of August. In contrast, the average daily minimum temperatures are higher along the coast during January because of the proximity to the relatively warm ocean. Based on data from MCAS-El Toro for a 14-year period of record, the annual average temperature is 62°F. The coldest month is January, with a mean maximum temperature of 63°F and a mean minimum temperature of 44°F. The warmest month is August, with a mean maximum temperature of 81°F and a mean minimum temperature of 61°F (Keith, 1980). Temperatures as high as 107°F and as low as 25°F were recorded at MCAS-El Toro during the data period.

The annual average precipitation along the coastal portion of Orange County is approximately 12 inches and generally increases inland to a maximum in the San Gabriel and San Bernardino Mountains (Keith, 1980). Based on data from the City of Santa Ana (located approximately 6 miles northwest of El Toro) for a 53-year period of record, the annual average precipitation at the site is approximately 14 inches, with approximately 91 percent of this rainfall occurring from November through April (Keith, 1980). Most of the precipitation is associated with eastward-moving cyclones and associated frontal systems.

Summer winds in the California South Coast Air Basin are predominantly onshore. The initial onshore flow is generally southerly; then, as the day progresses, westerly flow becomes predominant (Keith and Selik, 1977). Figures 2-2 and 2-3 show typical streamline patterns during summertime conditions for both daytime and nighttime flow. Figure 2-2 reveals the persistent onshore flow in the El Toro area, producing a high frequency of westerly winds. The nighttime flow (Figure 2-3) becomes more easterly, but instead of moving offshore, the flow is joined with the weak onshore flow and moves toward the northwest.

Wind data from El Toro for the period 1973 to 1977 are shown in Table 2-1. Annually, predominant winds are from the west, occurring about 15 percent of the time. Secondary predominant winds are from the east, occurring about 12 percent of the time. During the summer, the frequency of westerly winds reaches a maximum (about 22 percent), then decreases to a minimum in winter (about 9 percent). As fall approaches, radiational cooling of the Santa Ana Mountains at night, coupled with less persistent onshore flow, produces an increase in drainage winds from the east. Winds from the east become predominant in winter, occurring about 17 percent of the time.

The annual average wind speed at El Toro is 4.7 miles per hour with calms occurring about 16 percent of the time. Seasonal changes in mean wind speed are relatively small, varying by less than one mile per hour between a maximum in spring (5.0 miles per hour) and a minimum in fall (4.2 miles per hour).

During a preliminary meteorological survey conducted in April and May 1990, south-southwest through west-southwest air flow predominated. Drainage flow commonly occurred between 0100 and 0500 hours. The flow direction during these hours was variable, with northeast to east-northeast, southeast to south-southeast, and south-southwest to southwest being the predominant directions. Except during the afternoon, wind speeds during the survey were generally less than 10 mph. Wind speeds between 0100 and 0500 hours were typically less than 3 mph, with occasional hourly winds speeds greater than 5 mph. Figures 2-4 and 2-5 are wind roses constructed from data collected during the meteorological survey.

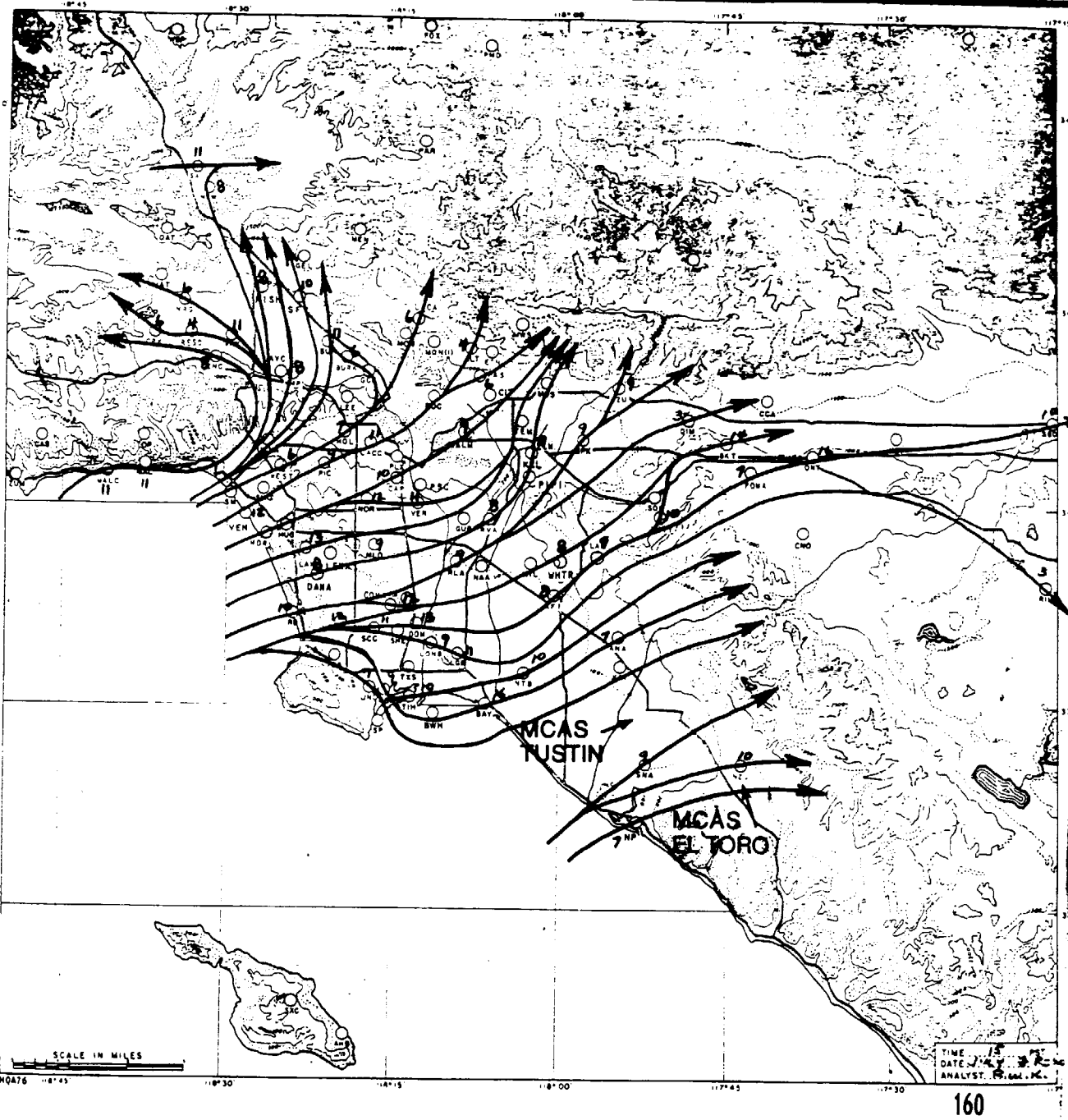

FIGURE 2–2.

Normal wind flow pattern and average wind speeds:

July 1500 PST

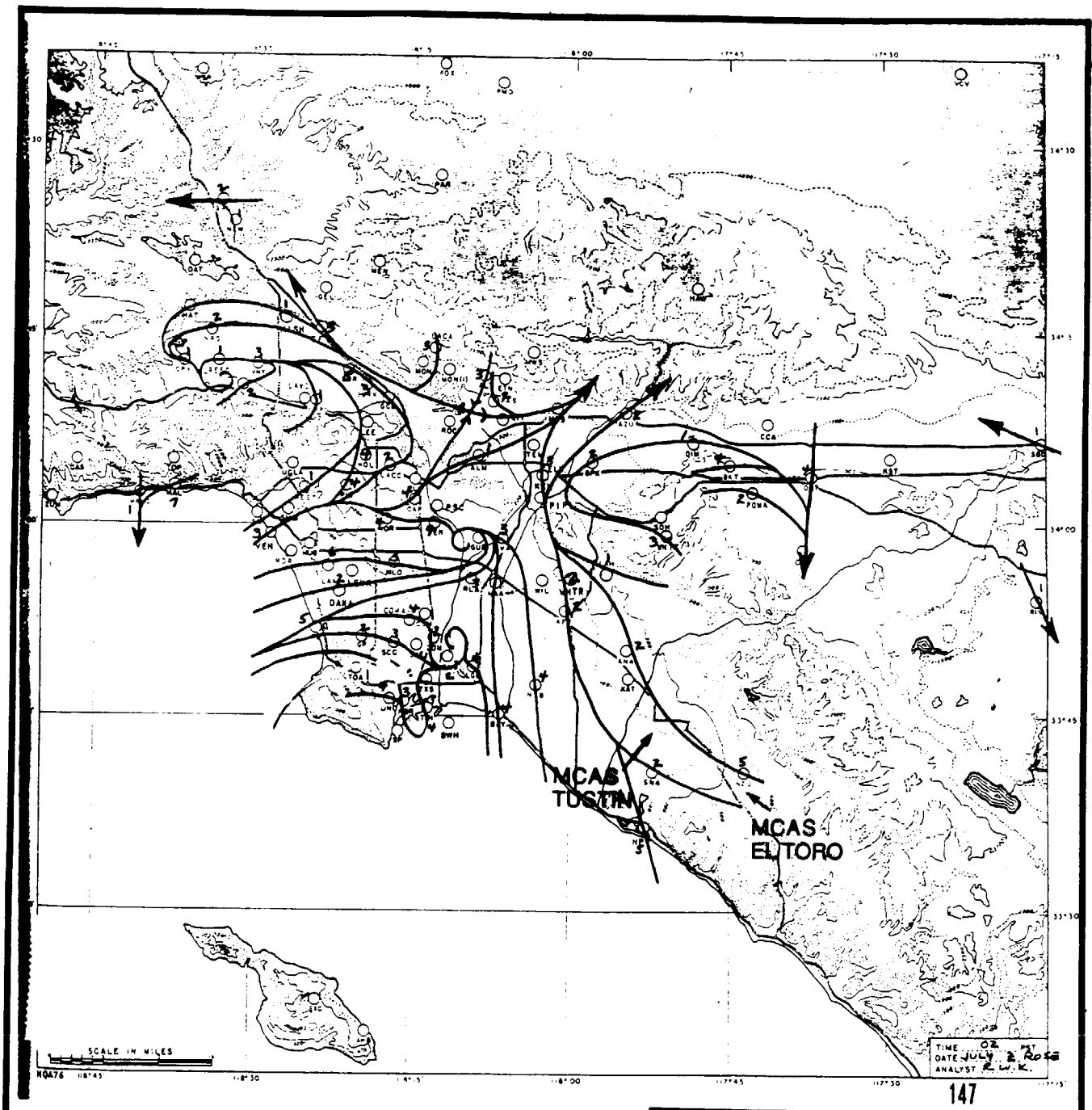

FIGURE 2-3.

NORMAL WIND FLOW PATTERN & AVERAGE WIND SPEEDS: JULY 0200 PST

TABLE 2-1. Wind data from El Toro.

SURFACE WIND SUMMARY			Period of Record:	Bias Index: 0.26
Station Name:	El Toro			Speed Units: MPH
Elevation:	383 Feet		1973 - 1977	
	Degrees	Minutes		Source Code
North Latitude:	33	40	Observations: 14,607	Data: 1
West Longitude:	117	44	24 OBS/DAY	Summary: D

	WINTER		SPRING		SUMMER		FALL		ANNUAL	
DIRECTION	% OF TIME	MEAN SPEED	% OF TIME	MEAN SPEED	% OF TIME	MEAN SPEED	% OF TIME	MEAN SPEED	% OF TIME	MEAN SPEED
N	2.9	6.3	1.9	5.9	1.2	3.3	2.1	4.4	2.0	5.3
NNE	4.5	8.8	1.7	4.7	0.4	3.3	2.3	5.4	2.2	6.9
NE	7.0	7.0	2.8	5.3	0.9	3.2	3.6	6.5	3.6	6.3
ENE	9.0	5.2	4.6	4.3	1.6	3.1	6.9	4.1	5.5	4.5
E	17.0	4.6	12.1	4.4	8.0	3.6	11.8	4.1	12.2	4.2
ESE	7.1	5.1	6.5	4.6	4.0	3.9	4.8	4.1	5.6	4.5
SE	4.7	5.5	5.3	5.3	3.7	4.7	3.4	4.1	4.3	5.0
SSE	4.9	6.0	6.6	6.1	4.7	5.5	3.4	5.1	4.9	5.8
S	4.3	5.5	7.8	6.0	7.5	5.4	4.3	5.4	6.0	5.6
SSW	2.1	4.8	4.0	6.6	3.1	5.4	1.8	5.4	2.7	5.7
SW	1.8	5.6	4.3	6.7	2.2	4.9	1.3	6.0	2.4	6.0
WSW	3.8	6.6	7.3	7.4	6.1	6.9	4.9	7.4	5.6	7.1
W	8.6	5.9	13.1	7.4	22.4	7.1	15.3	6.5	14.9	6.8
WNW	4.7	5.3	5.1	5.5	11.4	6.4	8.7	5.5	7.5	5.8
NW	2.1	4.8	1.8	5.1	4.9	5.3	3.5	4.4	3.1	4.9
NNW	1.6	4.7	1.0	4.8	2.6	4.2	2.0	3.9	1.8	4.3
CALM	13.8		14.0		15.2		19.8		15.6	
ALL		4.9		5.0		4.8		4.2		4.7

	WINTER	SPRING	SUMMER	FALL	ANNUAL
DIRECTION:	79	200	256	270	238
SPEED:	1.2	1.4	2.4	0.7	0.7
PER. RATIO:	0.24	0.28	0.49	0.17	0.16
DIRECTION:	E	W	W	W	W
SPEED:	4.9	7.0	6.9	6.4	6.6
PERCENTAGE:	33.1	25.5	39.9	28.9	28.0
DIRECTION:	W	ESE	SSE	E	E
SPEED:	5.9	4.7	5.3	4.1	4.3
PERCENTAGE:	17.1	23.9	15.9	23.5	23.3

Source: California Air Resources Board

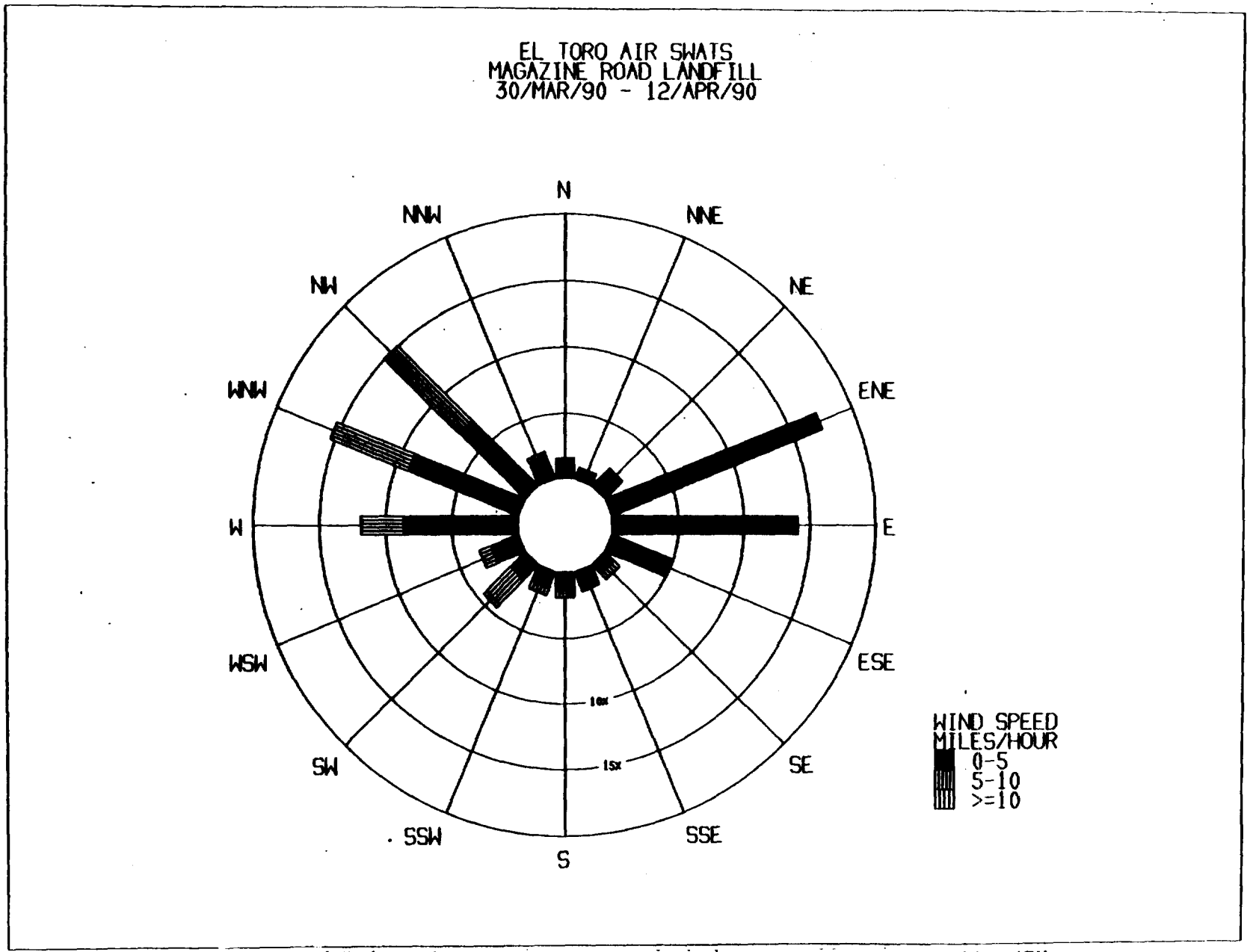

FIGURE 2-4. Wind rose for preliminary meteorological survey at Magazine Road Landfill.

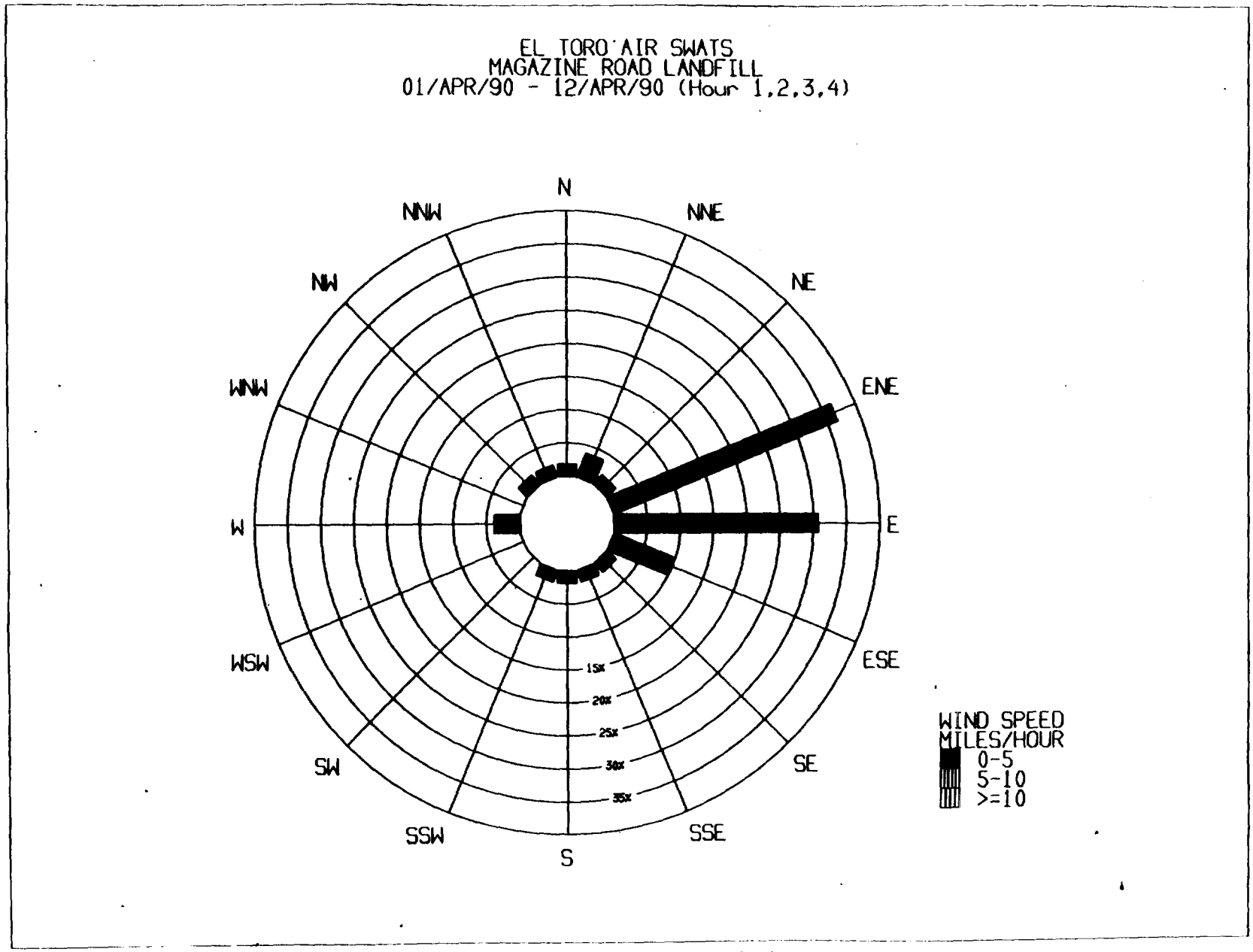

FIGURE 2-5. Wind rose (0100–0500) for preliminary meteorological survey at Magazine Road Landfill.

Section 3

GAS STREAM CHARACTERIZATION

3.1 LANDFILL GAS TEST

3.1.1 Overview of the Monitoring Program

To determine the composition of landfill gas, five landfill gas tests, one integrated surface sample, and one surface screening were conducted at the Magazine Road Landfill. Gas samples were collected between 15 May and 22 May 1990 from landfill gas probes that were installed on 1 and 2 May 1990 (Figure 3-1). A second round of samples was collected from Wells LG-01 and LG-02 on 21 and 22 June 1990, because the laboratory had not analyzed the first round of samples for all of the permanent gases requested. A total of seven landfill gas samples and one equipment blank were collected during the sampling program. The depths of the probes were eight feet below grade, with the exception of Well LG-02, which was seven feet below grade. Table 3-1 summarizes the landfill gas sample collection. Photographs in Appendix A illustrate the sampling apparatus and equipment.

The landfill gas samples were sent to Environmental Analytical Service, Inc. (EAS), where they were analyzed within 120-hours of their collection. The samples were tested for the Attachment 1 compounds (Table 3-2), using the disposal detection limits designated by the Air Resources Board (ARB) for reporting purposes (DLRs), and for the permanent gases (methane, carbon dioxide, oxygen and nitrogen). The SCAQMD approved DLR for methane and carbon dioxide was 20 parts per million by volume (ppm_v); for oxygen and nitrogen, it was 0.1 percent by volume ($\%_v$). Section 7 describes the methods used for sample analysis, and Section 8 discusses the field and laboratory quality assurance results.

3.1.2 Landfill Gas Sample Collection

The landfill gas probes were installed at the locations depicted in Figure 3-1. These locations were selected to provide a broad representation of the gases within the landfill. The five landfill gas sampling probes were constructed using a 3/4-inch outer diameter, 5/8-inch inner diameter galvanized steel pipe that had been steam-cleaned. Galvanized steel does not adsorb or offgas chemicals that would contaminate samples. Several 1/8-inch holes were drilled in the bottom foot of the pipe to collect the gas sample, and a point at the end of the probe prevented soil from entering the pipe (Figure 3-2). A jackhammer was used to drive the probe into the ground. This method does not create an annular space; thus, there is no pathway for ambient air to be drawn down into the well from the ground surface. The top of the pipe is threaded and was capped with a PVC cap after installation. For sampling, the probe was capped with a plug pierced by Teflon tubing to provide connection to the sampling system. Samples were collected at least 24 hours after probe installation. Before sampling, two volumes of gas were evacuated from the probe.

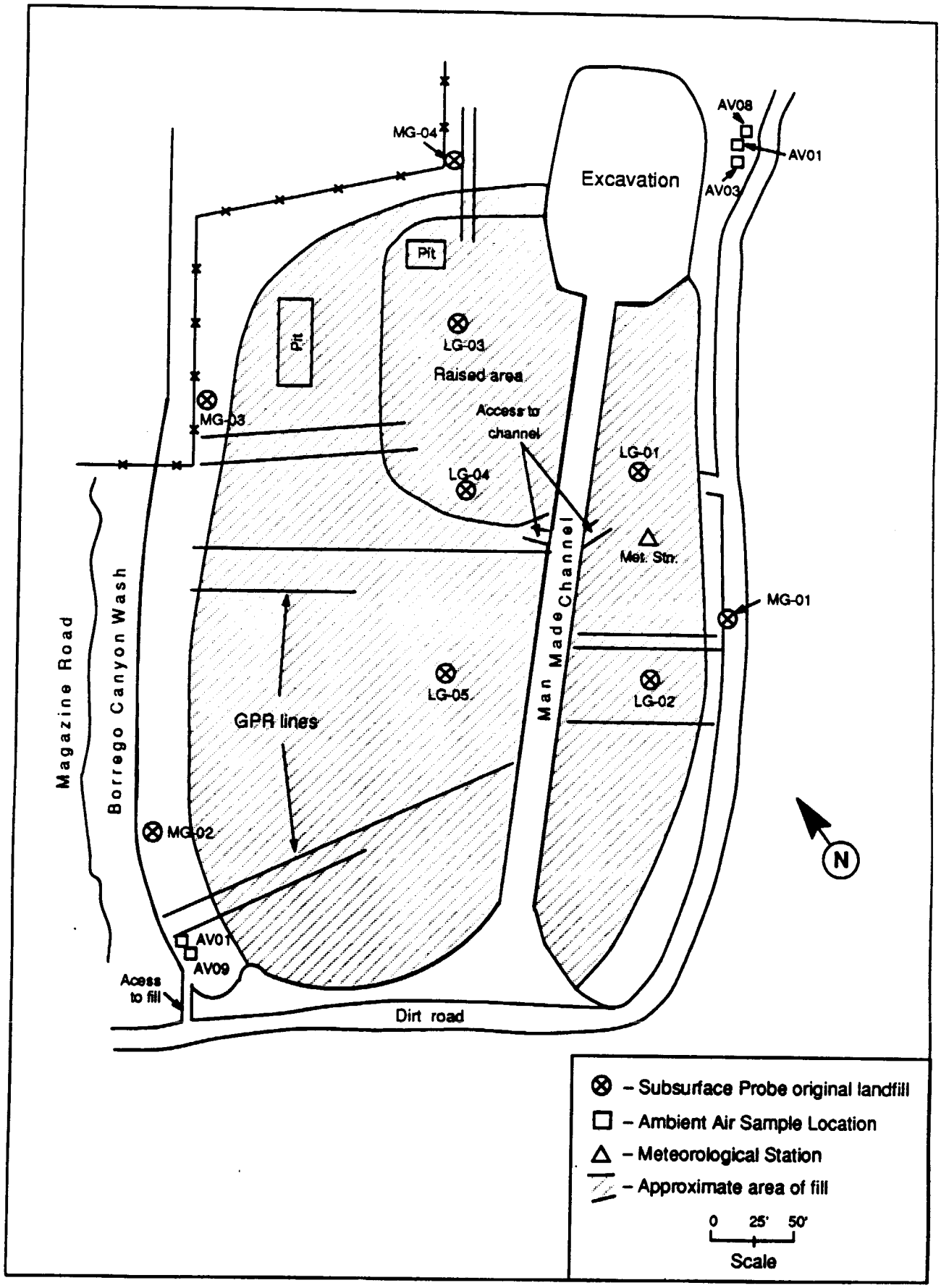

FIGURE 3-1. Magazine Road Landfill Sampling Locations.

TABLE 3-1

Landfill gas probe installation and sample collection
Magazine Road.

Well Number	Well Installation (Date Hour)		Sample Collection (Date Hour)		Well Depth (Feet)
MR-LG-00-02*	-------	--	5/15/90	2212	--
MR-LG-01-02	5/01/90	1540	5/18/90	1928	8.0
MR-LG-R1-02	5/01/90	1540	6/21/90	0745	8.0
MR-LG-02-02	5/01/90	1600	5/22/90	1838	7.0
MR-LG-R2-02	5/1/90	1600	6/22/90	0700	7.0
MR-LG-03-02	5/02/90	1630	5/15/90	2005	8.0
MR-LG-04-02	5/02/90	1650	5/15/90	1835	8.0
MR-LG-05-02	5/02/90	1705	5/15/90	1529	8.0

*Field System Blank

Table 3-2. Attachment 1 compounds - specified air contaminants.

Compound		Detection Limits, ppb Air	Disposal
Chloroethene (Vinyl Chloride)	CH_2:CHCl	2	500
Benzene	C_6H_6	2	500
1,2-Dibromoethane (Ethylene Dibromide)	$BrCH_2CH_2Br$	0.5	1
1,2-Dichloroethane (Ethylene Dichloride)	$ClCH_2CH_2Cl$	0.2	20
Dichloromethane (Methylene Chloride)	CH_2Cl_2	1	60
Tetrachloroethene (Perchloroethylene)	Cl_2C:CCl_2	0.2	10
Tetrachloromethane (Carbon Tetrachloride)	CCl_4	0.2	5
1,1,1-Trichloroethane (Methyl Chloroform)	CH_3CCl_3	0.5	10
Trichloroethylene	HClC:CCl_2	0.6	10
Trichloromethane (Chloroform)	$CHCl_3$	0.8	2

From Testing Guidelines for Active Solid Waste Disposal Sites, prepared by the California Air Resources Board, December 1986.

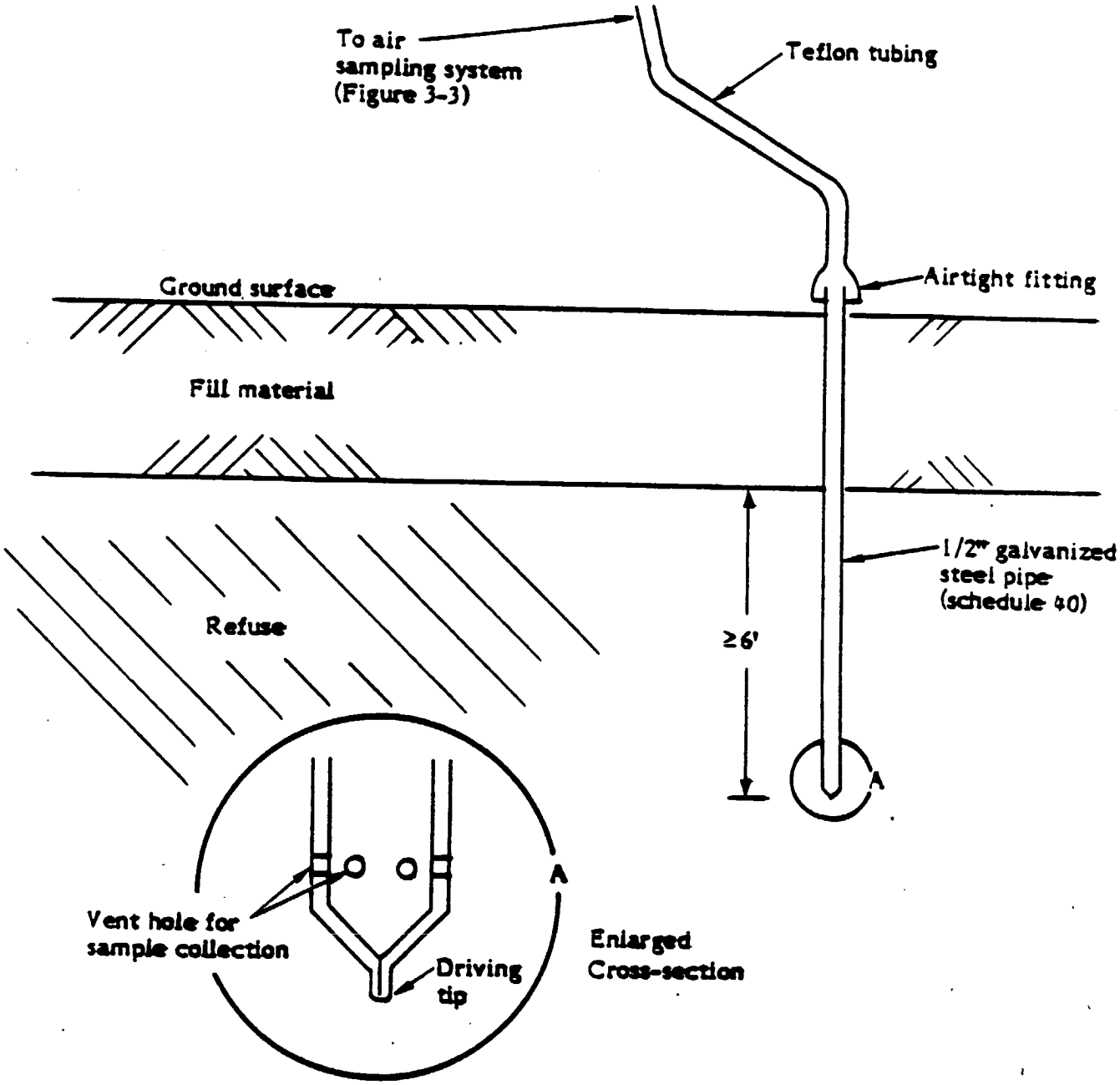

FIGURE 3-2. Gas sampling probe design.

87-673

The landfill gas sampling system is constructed entirely of stainless steel and Teflon (Figure 3-3). The sampling system uses a 12-volt DC diaphragm pump that is protected from moisture and dust by an in-line liquid trap and filter. A gauge monitors any vacuum that may occur while drawing a sample from the well. A valve and an upstream flow controller regulate the sample flow rate, which is monitored by a calibrated rotameter. A purge tee connects the sampling system to the sample container. It flushes the valve dead space and acts as a bypass valve for flow measurement.

The samples were collected at a flow rate of one liter per minute into 3.2-liter electropolished stainless steel canisters with noncontaminating bellows valves. The canisters were used instead of Tedlar bags, because they allow greater stability of the Attachment 1 compounds and other chemicals of interest. Because of the increased sample stability, the SCAQMD approved the use of canisters and increased the allowable sampling holding time from 72 to 120 hours.

The sample canisters were leak tested before use. They were assigned unique identification numbers while in service. Usage information, such as the date, sample time, sample location, canister number, sample identification number, initial and final canister pressures, and initial and final flow rates for each sampling canister was kept in a log book and on sample data sheets.

After each sample was collected, the final pressure of the canister was recorded. The canisters were shipped to the laboratory under positive pressure. When they arrived, the pressure was checked and compared to the pressure before shipment to confirm sample integrity. During sampling and shipping, the canisters were maintained at approximately 25°C.

Between uses, the landfill gas sampler was decontaminated by flushing the system with ambient air while screening the outflow emissions from the sampler for total organic compounds as methane (TOC) with a Century 128 organic vapor analyzer (OVA). Flushing continued until no measurable TOC level was observed, then the system was flushed with zero air for ten minutes. Before sample collection, the sampling system was purged with two probe volumes of landfill gas to avoid diluting the sample with zero air.

Following landfill gas sampling, a field system blank was collected using the landfill gas sampler to evaluate the effectiveness of our decontamination procedures. The blank was collected by pumping zero air through the sampling system into a stainless steel canister. It was handled similar to the landfill gas samples. The blank was submitted to the laboratory where it was analyzed for the Attachment 1 compounds using the air DLRs.

3.1.3 Results

Table 3-3 presents the analytical results for landfill gas samples collected at the Magazine Road Landfill. The detection limits shown are those recommended by the ARB guidelines and approved by SCAQMD for reporting purposes. Each sample was assigned a unique eight-digit label that identified the site, type

87-847

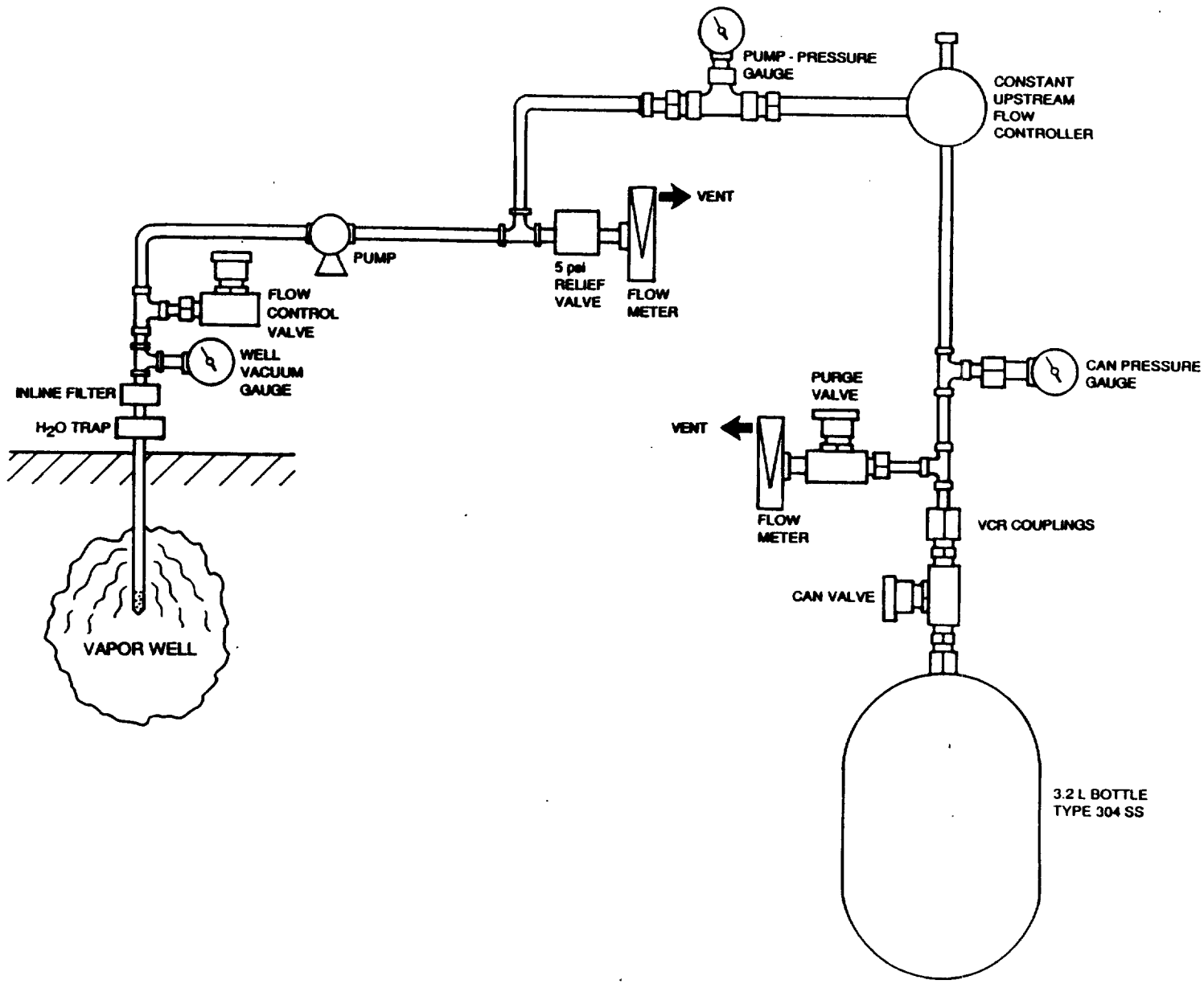

FIGURE 3-3. Probe sampling system.

TABLE 3-3. Landfill gas sample results, Magazine Road Landfill.

Compound	DLR (ppb)$_v$	00	01	R1	02	R2	03	04	05
Probe Number :		00	01	R1	02	R2	03	04	05
Date Sampled :		5-15-90	5-18-90	6-22-90	5-22-90	6-22-90	5-15-90	5-15-90	5-15-90
Date Analyzed :		5-19-90	5-24-90	6-25-90	5-26-90	6-25-90	5-19-90	5-19-90	5-19-90
Sample ID :		MR-LG-00-02*	MR-LG-01-02	MR-LG-R1-02	MR-LG-02-02	MR-LG-R2-02	MR-LG-03-02	MR-LG-04-02	MR-LG-05-02
Laboratory No. :		00500	00518	00733	00547	00734	00499	00498	00497
		Sample Concentration (ppb)$_v$							
Vinyl Chloride	500	ND	ND	ND	ND	ND	ND	ND	ND
Dichloromethane	60	1.3	ND	330	ND	230	ND	460	ND
Chloroform	2	ND	ND	ND	ND	ND	ND	21	ND
1,1,1-Trichloroethane	10	ND	ND	ND	ND	ND	ND	ND	ND
1,2-Dichloroethane	20	ND	ND	ND	ND	ND	ND	ND	ND
Benzene	5	ND	220	330	170	190	82	200	21
Carbon Tetrachloride	500	ND	ND	ND	ND	ND	ND	ND	ND
Trichloroethene	10	ND	98	150	11	ND	ND	78	ND
1,2-Dibromoethane	1	ND	ND	ND	ND	ND	ND	ND	ND
Tetrachloroethene	10	ND	36	79	ND	ND	ND	140	20
	-- (%)$_v$ --	Sample Concentration (%)$_v$							
Hydrogen	0.20	NA	ND	ND	ND	ND	ND	ND	ND
Oxygen	0.20	NA	0.22	0.26	0.36	0.56	4.3	2.2	1.6
Nitrogen	0.20	NA	9.4	14	21	24	20	42	76
Methane	0.002	NA	45	43	36	37	40	26	2.3
Carbon Monoxide	0.002	NA	ND	ND	ND	ND	ND	ND	ND
Carbon Dioxide	0.002	NA	NA	35	NA	33	32	28	19

ND = Not Detected

NA = Not Analyzed For

ppb$_v$ = Parts per Billion Volumetric

%$_v$ = Percent Volumetric

* = **Field System Blank**

DLR = Detection Limits for Reporting Purposes

of sample, well number, and sampler number. The following is an example and explanation of sample numbers assigned to landfill gas samples collected at the Magazine Road Landfill.

Sample Label	Explanation
MR-LG-03-02	MR= Magazine Road Landfill (Site Name) LG = Landfill Gas Sample 03 = Landfill Gas Probe Number 3 02 = Identification Number of the Sampler Used to Collect the Sample
MR-LG-R1-02	MR= Magazine Road Landfill (Site Name) LG = Landfill Gas Sample R1 = Resample Landfill Gas Probe Number 1 02 = Identification Number of the Sampler Used to Collect the Sample

All seven of the landfill gas samples collected at the Magazine Road Landfill contained Attachment 1 compounds in concentrations above their respective DLRs. Each of the samples contained benzene in concentrations ranging from 21 to 330 parts per billion by volume (ppb_v). Four of the samples contained tetrachloroethene (PCE) in concentrations ranging from 20 to 140 ppb_v. Dichloromethane ($MeCl_2$) and trichloroethene (TCE) each were detected in three samples in concentrations ranging from 230 to 460 ppb_v and 78 to 150 ppb_v, respectively. Chloroform was detected only in the sample from Probe LG-04 at 21 ppb_v. The field system blank collected during the initial round of landfill gas sampling contained $MeCl_2$ at a concentration less than the landfill gas DLR for this compound. The range in the permanent gas composition of the landfill gas samples was as follows: nitrogen, 9.4 to 76$\%_v$; oxygen, 0.22 to 4.3$\%_v$, methane, 2.3 to 45$\%_v$; and carbon dioxide, 19 to 35$\%_v$.

3.1.4 Discussion

The landfill gas collected from the Magazine Road Landfill contained $MeCl_2$, chloroform, benzene, TCE and PCE in concentrations above their respective DLRs. The highest concentrations and greatest variety of compounds were detected at Probes LG-01 and LG-04.

The $MeCl_2$ concentration for the repeat sampling from Probes LG-01 and LG-02 is suspect for two reasons: this compound was not detected in the first sampling round, and blanks from the time period when these samples were collected contained similar concentrations of $MeCl_2$. Our interpretation is that the $MeCl_2$ results for the repeat sampling at these probes are probably the result of system or laboratory contamination.

The permanent gas concentrations were variable, but elevated concentrations of methane were detected at four of the five sampling locations. The methane concentration at Probe LG-05 was much lower than at the other probes. Elevated concentrations of carbon dioxide were detected at all five sampling locations. The results of the permanent gas analysis indicate that the landfill is actively producing methane and carbon dioxide.

3.2 INTEGRATED SURFACE SAMPLE

3.2.1 Integrated Surface Sample

One integrated surface (IS) sample was collected at the landfill on 18 May 1990. Table 3-4 summarizes the date and time of the sample collection; photographs in Appendix A illustrate the sampling apparatus and equipment; and Figure 3-1 shows the sampling location.

The IS sampler used is a portable, self-contained unit with an internal power source. The system is constructed entirely of stainless steel and Teflon parts. Landfill emissions were drawn through a 6-inch diameter 316 stainless steel funnel by a 12-volt DC pump with an unlubricated Viton rubber diaphragm. They were collected into a 10-liter Tedlar bag. A purge tee connecting the sample bag to the IS sampler acts as a bypass valve for flow measurement, which was measured with a calibrated rotameter.

The complete system was leak tested before being sent to the field. Between uses, the IS sampler was decontaminated by flushing the system with ambient air for five minutes, followed by zero air for five minutes. Immediately before sampling the sampler lines were purged with landfill emissions so that the sample was not diluted by zero air.

The IS sample was collected from two to three inches above the landfill surface while a technician walked a 50,000-square-foot grid in approximately 25 minutes. Figure 3-4 shows the walking pattern. Sampling proceeded only when the ten minute average wind speed was five miles per hour or less, and the instantaneous wind speed was less than ten miles per hour. During sampling, the wind speed was monitored using a hand-held anemometer and confirmed with a mechanical weather station. The mechanical weather station is described in Section 6. The IS sample was collected when the landfill surface was dry; that is, when no rain had fallen within the previous 72 hours.

After the sample was collected and the final condition of the sample bag was recorded, the bag was shipped to EAS in a light-proof box. When it arrived at the laboratory, its condition was checked and compared to the condition before shipment to confirm sample integrity. During shipment, the sample was maintained at approximately 25°C. The IS sample was analyzed for TOC using a 2 ppm_v DLR in accordance with the ARB guidelines.

At the same time as the IS sample collection, a surface screening of the landfill was performed using a Century 128 OVA. The OVA was calibrated using zero air and a methane standard. During the screening, a sampling technician held the inlet to the OVA two to three inches above the landfill surface while walking the same grid pattern as was used for the IS sample collection. During the screening, a 2 ppm_v TOC DLR was used, in accordance with the ARB guidelines. OVA readings were recorded once per minute during the screening.

TABLE 3-4.

Integrated surface sample collection
Magazine Road Landfill.

Date Sampled	Start Time	End Time	Elapsed Time (minutes)
5/18/90	2009	2034	25

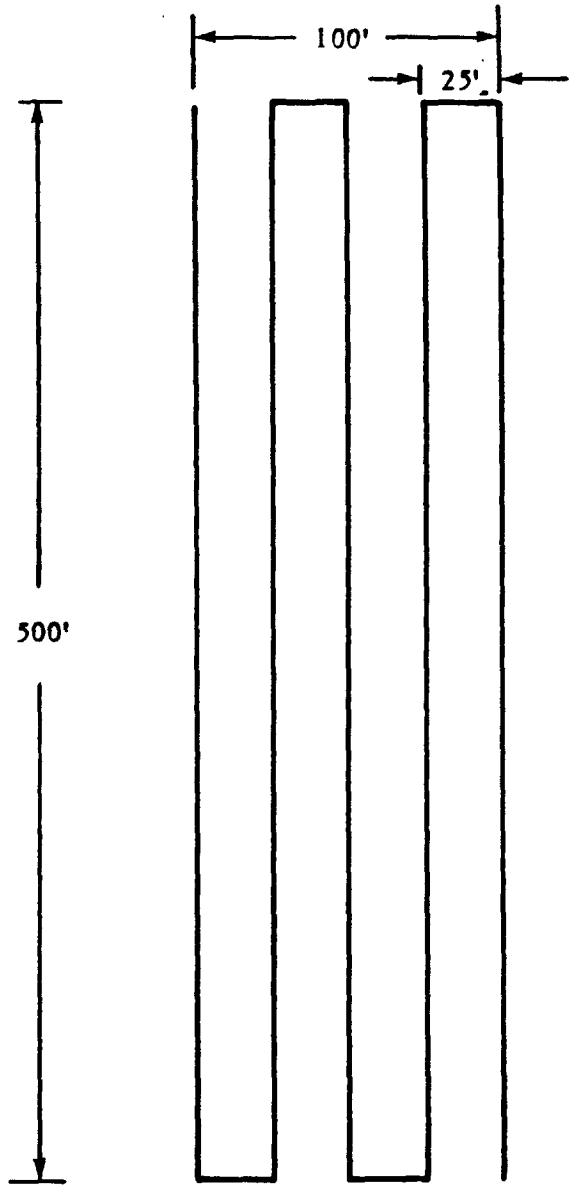

FIGURE 3-4. Walking pattern for integrated surface sample collection.

87-674

Source: South Coast AQMD

Before the screening, the background TOC concentration was measured by standing upwind of the landfill, holding the inlet of the OVA 10 feet above the ground, and taking a reading after one minute. A second background reading was taken following the surface screening.

3.2.2 Results

The TOC concentration of the IS sample collected from immediately above the Magazine Road Landfill was 2.9 ppm_v. The average wind speed was below 5 miles per hour for the duration of the sampling period, and at no time during the testing did the instantaneous wind speed exceed 10 miles per hour. During the surface screening one 2.5 ppm_v TOC reading was recorded with the OVA. The remainder of the OVA readings were below the 2 ppm_v DLR.

Section 4

AMBIENT AIR MONITORING

4.1 OVERVIEW OF THE MONITORING PROGRAM

To test for the presence of the Attachment 1 compounds in the ambient air at the Magazine Road Landfill, 24-hour and 4 hour drainage integrated air samples were collected adjacent to the disposal site. A total of 15 samples were collected over a period of three consecutive days. The samplers were located based on the prevailing winds at the site, as determined during the preliminary meteorological survey. Figure 3-1 shows the sampling locations. The upwind and downwind 24-hour samplers were located at the southwest and northeast perimeters of the landfill, respectively. The drainage samplers also were located at the northeast and southwest sides of the landfill, however, the upwind and downwind designation varied. The southwest sampler was downwind for the first two sets of drainage samples, but the northeast sampler was downwind during the final sampling round.

Wind data collected during the sampling periods show that winds were variable. Daytime winds were predominantly from the southwest through northwest. The nighttime drainage flow was usually from the northeast through east-southeast. However, on the final night of sampling the winds during the drainage sampling interval were from the west-southwest. Therefore, the upwind and downwind drainage sampling locations varied between samples. Table 4-1 summarizes the integrated air sample collection; photographs in Appendix A illustrate the sampling apparatus; and Figure 3-1 shows the sampling locations.

The samples were sent to EAS where they were analyzed within 120-hours of collection for the Attachment 1 compounds (Table 3-2), using the air detection limits designated by the Air Resources Board (ARB) for reporting purposes (DLRs). Section 7 describes the methods used for sample analysis, and Section 8 discusses the field and laboratory quality assurance results.

4.2 INTEGRATED AMBIENT AIR SAMPLE COLLECTION

The integrated ambient air samplers were located at or near the perimeter of the landfill site, away from obstacles such as trees, shrubbery, and buildings. The inlet probe was 6.1 feet off the ground, and air flow around it was unrestricted.

During sample collection, the wind speed and direction were monitored continuously by a mechanical weather station. The 24-hour samples of 17, 18, and 19 May 1990 were collected during average wind speeds of 4.1, 4.1, and 4.5 miles per hour (mph), respectively. The drainage samples from 16, 17, and 18 May 1990 were collected during average wind speeds of 2.6, 2.5, and 2.0 mph, respectively. Section 6 presents the wind direction and wind speed data for the sample collection periods. All of the samples

TABLE 4-1.

Integrated ambient air sample collection
Magazine Road Landfill.

Sample Number	Start Date	Start Time	End Date	End Time	Elapsed Time (hours)
MR-IA-01-09	5/15/90	1723	5/16/90	1600	22.8
MR-IA-01-03	5/15/90	1715	5/16/90	1610	23.0
MR-IA-C1-04	5/15/90	1715	5/16/90	1610	23.0
MR-IA-02-09	5/16/90	1745	5/17/90	1735	23.9
MR-IA-02-03	5/16/90	1752	5/17/90	1755	24.0
MR-IA-C2-04	5/16/90	1752	5/17/90	1755	24.0
MR-IA-03-09	5/17/90	1840	5/18/90	1840	24.0
MR-IA-03-03	5/17/90	1845	5/18/90	1845	24.0
MR-IA-C3-04	5/17/90	1845	5/18/90	1845	24.0
MR-IA-D1-08	5/16/90	0100	5/16/90	0500	4.0
MR-IA-D1-01	5/16/90	0100	5/16/90	0500	4.0
MR-IA-D2-08	5/17/90	0100	5/17/90	0500	4.0
MR-IA-D2-01	5/17/90	0100	5/17/90	0500	4.0
MR-IA-D3-08	5/18/90	0100	5/18/90	0500	4.0
MR-IA-D3-01	5/18/90	0100	5/18/90	0500	4.0

were collected when the surface of the landfill was dry; that is, at least 72 hours following rainfall.

The integrated ambient air samplers are constructed entirely of stainless steel and Teflon (Figure 4-1). Air is drawn into the system by a 12-volt DC diaphragm pump and is controlled with a back pressure flow controller. A purge tee connects the system to the air sampling container and is used to flush the valve dead space and to act as a bypass for flow measurements using a calibrated rotameter. Each sampler is contained in weatherproof housing.

Each complete sampling system was cleaned and vacuum leak tested before being sent to the field. Between uses, the integrated ambient air samplers were decontaminated by flushing the systems with ambient air for five minutes followed by zero air for five minutes. Before sampling, the samplers were purged with ambient air so that the samples would not be diluted with zero air.

The integrated air samples were collected in 3.2-liter electropolished stainless steel canisters and were handled as described in Section 3.1.2.

4.3 RESULTS

The analytical results for the ambient air samples are presented in Table 4-2. The detection limits shown are these recommended by the ARB guidelines and approved by SCAQMD for reporting purposes. Each sample was assigned a unique eight-digit label that identified the landfill, type of sample, sampling order, and sampler number. Examples of labels used for the ambient air samples and corresponding explanations follow:

Sample Label		Explanation
MR-IA-01-03	MR=	Magazine Road Landfill
	IA =	Integrated Ambient Air Sample
	01 =	First 24-hour Sample Collected
	03 =	Identification Number of the Sampler Used to Collect the Sample
MR-IA-D2-01	MR=	Magazine Road Landfill
	IA =	Integrated Ambient Air Sample
	D2 =	Second Drainage (Less Than 12-hour) Sample Collected
	01 =	Identification Number of the Sampler Used to Collect the Sample
MR-IA-C2-04	MR=	Magazine Road Landfill
	IA =	Integrated Ambient Air Sample
	C2 =	Second Collocated Sample Collected
	04 =	Identification Number of the Sampler Used to Collect the Sample

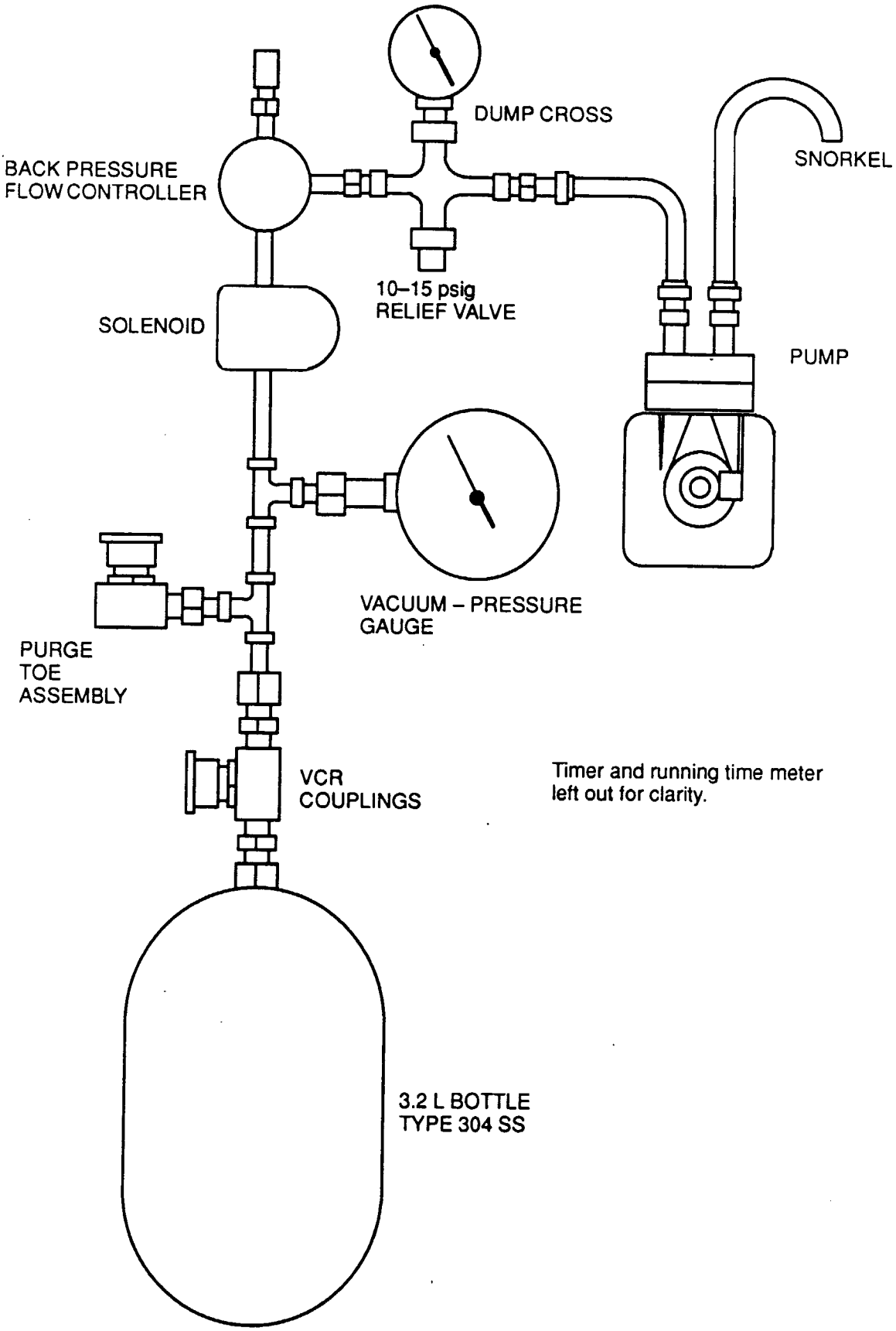

FIGURE 4-1. Integrated ambient air sampling system.

TABLE 4-2. Integrated ambient air sample results, Magazine Road Landfill.

Sample Type / Location :	24 hr/dwnwnd	24 hr c/dwnwnd	duplicate	24 hr/upwind	24 hr/dwnwnd	24 hr c/dwnwnd	24 hr/upwind
Date Sampled :	5-16-90	5-16-90	5-16-90	5-16-90	5-17-90	5-17-90	5-17-90
Date Analyzed :	5-18-90	5-18-90	5-18-90	5-19-90	5-21-90	5-21-90	5-21-90
Sample ID :	MR-IA-01-03	MR-IA-C1-04	MR-IA-C1-04	MR-IA-01-09	MR-IA-02-03	MR-IA-C2-04	MR-IA-02-09
Laboratory No. :	00503	00504	00504D	00505	00509	00511	00512
Average Wind Speed (mph) :	4.1	4.1	4.1	4.1	4.1	4.1	4.1
Compound	DLR (ppb)$_v$	Sample Concentration (ppb)$_v$					
Vinyl Chloride	2.00	ND	ND	ND	ND	ND	ND	ND
Dichloromethane	1.00	1.7	3.8	3.5	4.8	1.1	ND	ND
Chloroform	0.80	ND	ND	ND	ND	ND	ND	ND
1,1,1-Trichloroethane	0.50	0.83	2.2	2.2	1.6	ND	ND	ND
1,2-Dichloroethane	0.20	ND	ND	ND	ND	ND	ND	ND
Benzene	2.00	ND	ND	ND	ND	ND	ND	ND
Carbon Tetrachloride	0.20	ND	ND	ND	ND	ND	ND	ND
Trichloroethene	0.60	ND	ND	ND	ND	ND	ND	ND
1,2-Dibromoethane	0.50	ND	ND	ND	ND	ND	ND	ND
Tetrachloroethene	0.20	0.34	0.22	ND	0.32	ND	ND	ND

Sample Type / Location :	24 hr/dwnwnd	24 hr c/dwnwnd	24 hr/upwnd
Date Sampled :	5-18-90	5-18-90	5-18-90
Date Analyzed :	5-24-90	5-21-90	5-21-90
Sample ID :	MR-IA-03-03	MR-IA-C3-04	MR-IA-03-09
Laboratory No. :	00517	00516	00515
Average Wind Speed (mph) :	4.5	4.5	4.5
Compound	DLR (ppb)$_v$	Sample Concentration (ppb)$_v$		
Vinyl Chloride	2.00	ND	ND	ND
Dichloromethane	1.00	ND	ND	ND
Chloroform	0.80	ND	ND	ND
1,1,1-Trichloroethane	0.50	1.1	ND	ND
1,2-Dichloroethane	0.20	ND	ND	ND
Benzene	2.00	ND	ND	ND
Carbon Tetrachloride	0.20	ND	ND	ND
Trichloroethene	0.60	ND	ND	ND
1,2-Dibromoethane	0.50	ND	ND	ND
Tetrachloroethene	0.20	0.39	ND	ND

ND = Not Detected
ppb$_v$ = Parts per Billion Volumetric
DLR = Detection Limits for Reporting Purpose

TABLE 4-2. (Continued).

Sample Type / Location :		drng/dwnwnd	drng/upwind	drng/dwnwnd	drng/upwind	drng/upwind	drng/dwnwnd
Date Sampled :		5-16-90	5-16-90	5-17-90	5-17-90	5-18-90	5-18-90
Date Analyzed :		5-19-90	5-18-90	5-18-90	5-14-90	5-21-90	5-21-90
Sample ID :		MR-IA-D1-01	MR-IA-D1-08	MR-IA-D2-01	MR-IA-D2-08	MR-IA-D3-01	MR-IA-D3-08
Laboratory No. :		00502	00501	00506	00507	00513	00510
Average Wind Speed (mph) :		2.6	2.6	2.5	2.5	2.0	2.0
Compound	$(ppb)_v$	Sample Concentration $(ppb)_v$					
Vinyl Chloride	2.00	ND	ND	ND	ND	ND	ND
Dichloromethane	1.00	1.5	1.3	1.4	1.9	ND	ND
Chloroform	0.80	ND	ND	ND	ND	ND	ND
1,1,1-Trichloroethane	0.50	0.87	ND	2.5	1.5	ND	ND
1,2-Dichloroethane	0.20	ND	ND	ND	ND	ND	ND
Benzene	2.00	ND	ND	ND	ND	ND	ND
Carbon Tetrachloride	0.20	ND	ND	ND	ND	ND	ND
Trichloroethene	0.60	ND	ND	ND	ND	ND	ND
1,2-Dibromoethane	0.50	ND	ND	ND	ND	ND	ND
Tetrachloroethene	0.20	0.30	ND	0.23	0.53	ND	ND

ND = Not Detected

ppb_v = Parts per Billion Volumetric

DLR = Detection Limits for Reporting Purposes

The 24-hour samples collected at the Magazine Road Landfill contained three of the Attachment 1 compounds in concentrations above their respective DLRs. Five of the 24-hour samples contained dichloromethane ($MeCl_2$) in concentrations ranging from 1.0 to 4.8 ppb_v. Four of the 24-hour samples contained 1,1,1,-trichloroethane (TCA) and tetrachloroethene (PCE) in concentrations ranging from 0.83 to 2.2 ppb_v and 0.22 to 0.39 ppb_v, respectively.

$MeCl_2$, TCA, and PCE were the only Attachment 1 compounds detected in the 4-hour drainage samples collected at the landfill. $MeCl_2$ and TCA were detected in four samples at concentrations ranging from 1.3 to 1.9 ppb_v, and 0.50 to 1.5 ppb_v, respectively. PCE was detected in three of the samples at concentrations ranging from 0.23 to 0.53 ppb_v. No Attachment 1 compounds were detected in the third round of drainage samples collected.

4.4 DISCUSSION

The ambient air samples collected at the Magazine Road Landfill contained three Attachment 1 compounds: $MeCl_2$, TCA, and PCE. In general, the concentrations of the compounds were close to their DLRs and similar for corresponding upwind and downwind drainage samples.

$MeCl_2$ was measured near its ARB DLR in most of the ambient air samples collected and in comparable concentrations in both the upwind and downwind drainage samples. $MeCl_2$ was also detected in the landfill gas at the site. Near DLR concentrations of $MeCl_2$ were measured in four of the presampling ambient air equipment blanks collected prior to the study (Section 8). This factor along with the comparable concentrations of $MeCl_2$ in both the upwind and downwind samples suggest that the landfill may not be the source of the $MeCl_2$ detected or that other sources contribute to ambient levels of $MeCl_2$ in this area.

TCA was also measured in comparable, near DLR concentrations in both the 24-hour and upwind and downwind drainage samples. It was not detected in the landfill gas samples collected at the site. Consequently, the landfill may not be the source of the TCA detected in the ambient air samples collected at this landfill.

PCE was detected in several of the ambient air samples at concentrations close to its ARB DLR in both 24-hour and upwind and downwind drainage samples. PCE was also detected in the landfill gas samples collected at the site. A near DLR concentration of PCE was measured in one of the presampling ambient air equipment blanks collected prior to the study (Section 8). The comparable concentrations of $MeCl_2$ in both the upwind and downwind air samples suggest that the landfill may not be the source of the PCE detected or that it may not be the only source in the area.

Section 5

GAS MIGRATION TESTING

5.1 OVERVIEW OF THE MONITORING PROGRAM

To evaluate whether landfill gas is migrating off site through the subsurface, soil gas was collected from gas migration probes that were installed on 1 and 2 May 1990. Four migration gas monitoring probes were installed six feet below grade at each site perimeter.

Migration gas samples were collected on 18 and 22 May 1990. They were sent to EAS where they were analyzed for total organic compounds as methane (TOC) using a 2 ppm_v DLR in accordance with the ARB guidelines. Table 5-1 summarizes the migration gas sampling; Appendix A contains photographs of probe installation, sampling procedures, and equipment; and Figure 3-1 shows the sampling locations.

5.2 MIGRATION GAS SAMPLE COLLECTION

The migration gas samples were obtained using the landfill gas sampling system described in Section 3.1.2. The samples were collected in 3.2-liter electropolished stainless steel canisters. Initially, the gas probes were purged of two volumes of gas and then the samples were collected following the methods described in Section 3.1.2.

After collecting each migration gas sample, the sampler was decontaminated by purging it with ambient air for 10 minutes, or until the TOC concentration at the purge valve vent was the same as in the ambient air, whichever took longer. The sampler was then flushed with zero air for 10 minutes. The initial evacuation of the migration gas wells ensured that the TOC measurements did not reflect dilution with zero air.

5.3 RESULTS

Table 5-2 presents the analytical data for the four migration gas samples collected at the Magazine Road Landfill site. Each sample was assigned a unique eight-digit number that identified the site, type of sample, sampling order, and sampler number. The following is an example of a sample label assigned to a migration gas sample and an explanation of that label.

Sample Number		Explanation
MR-MG-02-02	MR=	Magazine Road Landfill (Site Name)
	MG=	Migration Gas Sample
	02 =	Second Migration Gas Sample Collected
	02 =	Identification Number of the Sampler Used to Collect the Sample

TABLE 5-1.

Migration gas probe installation and sample collection
Magazine Road Landfill.

Probe Number	Probe Installation (Date Hour)		Sample Collection (Date Hour)		Probe Depth (feet)
MR-MG-01-02	5/01/90	1650	5/18/90	1818	6.0
MR-MG-02-02	5/02/90	1715	5/22/90	1655	6.0
MR-MG-03-02	5/02/90	1730	5/22/90	1728	6.0
MR-MG-04-02	5/02/90	1740	5/22/90	1754	6.0

TABLE 5-2. Migration gas sample results, Magazine Road Landfill.

	Probe No. :	01	02	03	04
	Date Sampled :	5-18-90	5-22-90	5-22-90	5-22-90
	Date Analyzed :	5-21-90	5-26-90	5-26-90	5-26-90
	Sample ID :	MR-MG-01-02	MR-MG-02-02	MR-MG-03-02	MR-MG-04-02
	Laboratory No. :	00519	00544	00545	00546
Compound	Detection Limit $(ppm)_v$	Sample Concentration $(ppm)_v$			
TOC	2.00	25000	15.2	5.0	5.2

ND = Not Detected
ppm_v = Parts per Million Volumetric
DLR = Detection Limits for Reporting Purposes

TOC was measured in the soil gas collected at each perimeter of the landfill in concentrations above the minimum detection limit of 2 ppm_v. The concentrations ranged from 5.0 ppm_v at Probe MG-03 to 2.5 $\%_v$ at Probe MG-02.

Section 6

WIND MONITORING

6.1 OVERVIEW OF MONITORING PROGRAM

The ARB's recommendations for wind speed and wind direction during Air SWAT surface screening and ambient air sample collection have been discussed in Sections 3 and 4 and are briefly summarized below.

1. Surface screening should be conducted only when the average wind speed is 5 miles per hour or less, and the instantaneous wind speed is less than 10 miles per hour.

2. Ambient air samples should be collected only when nighttime wind speeds average 5 miles per hour or less.

3. Ambient air samples should be collected only when daytime wind speeds average 10 miles per hour or less.

4. Ambient air samples should not be collected when 24-hour average wind speeds are greater than 10 miles per hour.

5. Integrated air samplers, collecting 24-hour samples, should be placed at the upwind and downwind site perimeters, based on the prevailing wind direction.

6. Integrated air samplers, collecting drainage samples, should collect air that has not passed over the landfill and air that has.

A mechanical weather station (MWS) was set up near the northeast perimeter of the Magazine Road Landfill to monitor the wind speed and direction during sample collection (Figure 3-1). The MWS recorded representative winds from 8 to 12 May 1990. All wind-dependent sampling was conducted during this period.

6.2 MEASUREMENT OF WIND SPEED AND DIRECTION

The MWS uses a rotating anemometer with three 4-1/2 inch aluminum cups. The anemometer has a starting threshold of 0.75 miles per hour and is able to measure wind speeds between 0.75 and 50 miles per hour accurately. Wind direction is defined as the direction from which the wind is blowing and is measured in degrees from true north. A single-blade aluminum windvane with nose-damping measured the wind direction. It is mounted directly below the anemometer on a central shaft, so that wind direction and wind speed are measured from the same point in space. It has a range of 0 to 360 degrees and a starting threshold of one mile per hour. Data points are recorded once a minute by a chart recorder that is

accurate to ±60 seconds per 24 hours when it is operated in ambient temperatures between -25°F and 160°F. The chart recorder produces black traces on plastic-coated, pressure-sensitive paper with a white background.

The MWS was installed 12 feet above the ground and more than 60 feet away from obstacles such as trees and buildings. The wind vane was aligned to true north after accounting for the 14 degree local magnetic declination. The time, date, location, project number and technician's initials were marked at the beginning and end of the chart, and whenever the technician checked the MWS. The data were collected relative to local time, but are reported in standard time.

6.3 RESULTS

The chart data were reduced into wind speed and wind direction hourly averages. For example, the data collected between 1:00 p.m. and 2:00 p.m. were averaged and are reported as the 1:00 p.m. hourly average. Wind speeds are reported in miles per hour. Wind directions are reported in sixteen directional points—north (N), north-northeast (NNE), northeast (NE), east-northeast (ENE), east (E), east-southeast (ESE), southeast (SE), south-southeast (SSE), south (S), south-southwest (SSW), southwest (SW), west-southwest (WSW), west (W), west-northwest (WNW), northwest (NW), and north-northwest (NNW)—which are each a 22-1/2 degree sector of a 360-degree circle.

The average prevailing wind direction is determined by the most occurrences of a specific direction over the averaging period. If wind directions prevail equally in two sectors that are adjacent (i.e., north and north-northwest), then the direction that occurs first within the averaging period becomes the prevailing wind direction. Variable wind direction is defined as the wind direction prevailing equally in two separate sectors that are not adjacent over the period being averaged. For example, if the wind direction was north (0 degrees) for 30 minutes and south (180 degrees) for 30 minutes, the average wind direction for that hour would mathematically be 90 degrees, or east. Because the wind direction was never east during that hour, it is defined as being variable.

Wind speed and wind direction hourly averages are presented in Tables 6-1 and 6-2, respectively, for the Magazine Road Landfill field program. The average wind speeds for the integrated surface sample and integrated air sample collection periods are shown in Table 6-3.

TABLE 6-1. Wind speed hourly averages (miles per hour), Magazine Road Landfill.

DATE	HOUR	00	01	02	03	04	05	06	07	08	09	10	11	12	13	14	15	16	17	18	19	20	21	22	23
May 15, 1990																	6.0	7.0	6.0	6.0	3.5	1.5	2.0	3.0	3.0
May 16, 1990		4.0	2.5	2.5	2.5	3.0	3.0	2.5	2.0	2.5	3.0	5.0	6.0	6.0	10.0	10.0	10.0	8.0	3.0	5.0	3.5	2.0	2.0	2.0	1.5
May 17, 1990		3.0	2.5	2.0	3.0	2.5	2.0	4.0	2.5	4.0	3.0	5.0	5.5	7.0	8.0	8.0	9.0	6.0	6.5	7.0	6.0	4.0	4.0	3.5	2.5
May 18, 1990		2.0	3.0	2.0	1.5	1.5	2.0	2.0	2.0	5.5	6.0	5.0	4.5	6.0	7.5	7.5	7.5	8.0	7.0						

(ND) = No data available

TABLE 6-2. Wind direction hourly averages, Magazine Road Landfill.

DATE	HOUR	00	01	02	03	04	05	06	07	08	09	10	11	12	13	14	15	16	17	18	19	20	21	22	23
May 15, 1990																	WSW	WSW	WSW	WSW	W	WSW	NE	NE	NE
May 16, 1990		NNE	NNE	NNE	NE	NE	NE	NE	NE	SW	NW	NNW	NW	NW	NW	WSW	WSW	WSW	WNW	WNW	WNW	NW	W	ENE	ENE
May 17, 1990		ENE	ENE	ESE	ENE	NE	ENE	ENE	SSE	SE	SE	SW	SW	SW	WSW	WSW	WSW	SW	SW	WSW	WSW	SW	SW	SW	SW
May 18, 1990		SSW	WSW	WSW	WSW	S	SNE	NE	ND	SSE	S	S	S	WSW	W	W	WNW	W	WSW						

(ND) = No data available

TABLE 6-3.

Average wind speeds
for the sampling periods
Magazine Road Landfill.

Sample Identification	Wind Speed (mph)
MR-IS-01-03	2.1
MR-IA-01-09	4.1
MR-IA-01-03	4.1
MR-IA-C1-04	4.1
MR-IA-02-09	4.1
MR-IA-02-03	4.1
MR-IA-C2-04	4.1
MR-IA-03-09	4.5
MR-IA-03-03	4.5
MR-IA-C3-04	4.5
MR-IA-D1-08	2.6
MR-IA-D1-01	2.6
MR-IA-D2-08	2.5
MR-IA-D2-01	2.5
MR-IA-D3-08	2.0
MR-IA-D3-01	2.0

Section 7

ANALYTICAL METHODS

The analytical methods used for the Magazine Road Landfill study satisfy the requirements of California Statute AB 3374 (Calderon), including HSC 41805.5. They include procedures for evaluating the chemical composition of landfill and migration gas samples, surface emissions, and ambient air samples.

o Total Organic Compounds as Methane (TOC)

During field analysis for TOC, the sample is introduced into a Foxboro Century 128 organic vapor analyzer (OVA) with a flame ionization detector. The OVA pumps the sample continuously through a detection chamber where organic compounds are ionized by a hydrogen flame. An electric field in the detection chamber drives the ions to a detection electrode. As the positive ions collect at the electrode, a current is generated that is proportional to rate of ion accumulation. This current is amplified by the instrument to be read on the output display. Before use, the OVA is calibrated with zero air and a methane gas standard. Therefore, the TOC concentration is read as methane, in accordance with the ARB guidelines.

Laboratory analysis for low levels of TOC is accomplished using a gas chromatograph with a flame ionization detector by direct injection onto a Poropak Q column. After the methane peak is measured, all the nonmethane hydrocarbons are backflushed directly through the detector. The nonmethane hydrocarbon area is compared to a methane standard to calculate the concentrations relative to methane. Finally, the methane concentrations and the nonmethane hydrocarbon concentration relative to methane are added to determine the concentrations of TOC.

Laboratory analysis for high levels of TOC is accomplished using the methods described below. The TOC concentration is determined by adding the nonmethane hydrocarbon results to the methane results.

o Nonmethane Hydrocarbons

The sample is run through a sorbent trap to separate the methane and nonmethane organics. The nonmethane organics are then catalytically converted to carbon dioxide, which is analyzed using nondispersive infrared spectrophotometry.

o Permanent Gases (Methane)

The samples are analyzed for low levels of methane using a gas chromatograph with a flame ionization detector. The sample is introduced into the gas chromatograph by direct injection onto a Poropak Q column. After the analytical run is completed, the peak areas are integrated and compared to a methane

standard. For high concentrations of methane, the samples are analyzed by combusting the sample to convert the methane to carbon dioxide and then introducing the sample into a gas chromatograph with a thermal conductivity detector.

- **Permanent Gases (Carbon Dioxide, Nitrogen, and Oxygen)**

Carbon dioxide, nitrogen and oxygen gases are measured using a gas chromatograph with a thermal conductivity detector. The sample is introduced into the gas chromatograph through a gas sampling loop and is separated by a molecular sieve 5A column.

- **Attachment 1 Compounds**

Samples are analyzed for the Attachment 1 compounds using a gas chromatograph/mass spectrometer (GC/MS) system. The sample is introduced into the system through a Nafion dryer and concentrated using a freeze-out loop. The compounds are separated by a 30-meter fused-silica capillary column and are measured by a mass spectrometer detector. The GC/MS system has a complete data system, capable of collecting, storing and interpreting the data. The system is calibrated using an external standard containing all ten Attachment 1 compounds. Each compound is calibrated directly against this standard so that no response factors are used.

Table 7-1 summarizes the analytical methods, method detection limits, sample holding times, and sample temperature requirements adhered to throughout the program.

TABLE 7-1. Analytical methods summary.

Parameter	Method Number	Analytical Method	DLR for Air	DLR for Landfill Gases	Holding Time (hrs)	Temperature Requirements (°C)
TOC as Methane	NA	GC Analysis using an FI Detector	2 ppm_v	2 ppm_v	120	Approx. 25
Chloroethene*	ADDL002	GC Analysis using a PI or MS Detector 10% Confirmation by GC/MS	2 ppb_v	500 ppb_v	120	Approx. 25
Benzene*	ADD002	GC Analysis using a PI or MS Detector Confirmation by GC/MS	2 ppb_v	500 ppb_v	120	Approx. 25
1,2-Dibromoethane*	ARB 103	GC Analysis using an EC or MS Detector 10% Confirmation by GC/MS	0.5 ppb_v	1 ppb_v	120	Approx. 25
1,2-Dichloroethane*	ARB 103	GC Analysis using an EC or MS Detector 10% Confirmation by GC/MS	0.2 ppb_v	20 ppb_v	120	Approx. 25
Dichloromethane*	ARB 103	GC Analysis using an EC or MS Detector 10% Confirmation by GC/MS	1 ppb_v	60 ppb_v	120	Approx. 25
Tetrachloroethene*	ARB 103	GC Analysis using an EC or MS Detector 10% Confirmation by GC/MS	0.2 ppb_v	10 ppb_v	120	Approx. 25
Tetrachloromethane*	ARB 103	GC Analysis using an EC or MS Detector 10% Confirmation by GC/MS	0.2 ppb_v	5 ppb_v	120	Approx. 25
1,1,1-Trichloroethane*	ARB 103	GC Analysis using an EC or MS Detector 10% Confirmation by GC/MS	0.5 ppb_v	10 ppb_v	120	Approx. 25
Trichloroethylene*	ARB 103	GC Analysis using an EC or MS Detector 10% Confirmation by GC/MS	0.6 ppb_v	10 ppb_v	120	Approx. 25
Trichloromethane*	ARB 103	GC Analysis using an EC or MS Detector 10% Confirmation by GC/MS	0.8 ppb_v	2 ppb_v	120	Approx. 25
Permanent Gases (N_2, O_2)	NA	GC Analysis using a Thermal Conductivity Detector	0.1 $\%_v$	0.1 $\%_v$	120	Approx. 25
Permanent Gases (CO_2, CH_4)	EPA 25	GC Analysis using an FI Detector	20 ppm_v	20 ppm_v	120	Approx. 25

NA Not available.
* Attachment 1 Compound.
$(ppb)_v$ Concentration in parts per billion by volume at 25 °C.
$(ppm)_v$ Concentration in parts per billion by volume at 25 °C.
$\%_v$ Concentration in percent by volume at 25 °C.
DLR = Detection Limits for Reporting Purposes

Section 8

QUALITY ASSURANCE SUMMARY

8.1 QUALITY ASSURANCE OBJECTIVES

The quality assurance (QA) objectives of the Magazine Road Landfill study are described in terms of accuracy, precision and completeness. QA objectives are determined for each measured parameter, whether from sample collection, field measurement, or laboratory analysis. Table 8-1 summarizes the field and laboratory QA objectives for accuracy, precision and completeness.

8.1.1 Analytical Detection Limits

The Air Resources Board (ARB) established detection limits for reporting purposes (DLRs) for each parameter to be measured during the Calderon program (Table 3-2). For the Magazine Road Landfill study, if the detection limit achieved was by the laboratory was lower than the ARB DLR, the ARB DLR was used for reporting purposes.

8.1.2 Accuracy

Accuracy is defined as the degree of agreement of a measurement or an average of measurements for a parameter with the accepted reference or true value. It is a combination of the bias and precision in a measurement system. Accuracy is usually expressed as the difference between the measured value "X" and the reference or true value "T", (X-T), or the difference, in percent, between the two values, (100(X-T)/T), or a ratio of the two values, (X/T) (EPA, 1980).

o Field Measurements

Accurate sample collection requires the collection of samples that are undisturbed and representative of the entity being sampled. The sampling methodology must not alter the composition of the sample chemically or physically. To minimize the introduction of error during the field program, specific protocols were established for sample collection and handling. These are described in Sections 3 through 6 of this report and in more detail in the Calderon Air SWAT Monitoring Plan and Quality Assurance Project Plan (AeroVironment, 1988). At the start of the sampling program, all of the field personnel participated in an on-site training course that provided hands-on instruction in the correct procedures for sample collection, handling and documentation.

Accurate sample collection also requires the use of equipment that is constructed and decontaminated such that it minimizes sample degradation or contamination. Prior to and during the Air SWAT program, blanks were collected to ensure that the sampling equipment was relatively clean at the start of the project

TABLE 8-1. Summary of QA objectives.

Parameter	Sampling Accuracy (+/- %)	Sampling Precision (+/- %)	Sampling Completeness (%)	Analytical Accuracy (+/- %)	Analytical Precision (+/- %)	Analytical Completeness (%)
	Blind Spike Recovery	Collocated Samplers		Interlab Comparison	Duplicate Samples	
TOC as Methane (GC-FID)	NA	NA	80	15	10	90
Attachment 1 Compounds (GC-PID/ECD)	20	20	80	20	10	90
Attachment 1 Compounds (GC-MSD)	20	30	80	30	20	90
Permanent Gases (GC-TCD)	NA	NA	80	5	5	90
	Performance Audits					
Flow Rates	15					
Timers	1					
Wind Speed	1mph					
Wind Direction	5 degrees					

and that the decontamination procedures used during the testing were adequate. The decontamination procedures are described for each type of sampler in Sections 3 through 6 of this report.

The ambient air samplers used for Calderon sampling were cleaned and tested at the time they were assembled and immediately before conducting the field work for this project. Prior to conducting any Calderon sampling, EAS cleaned and leak-tested each ambient air sampler. Equipment blanks were collected and analyzed for the Attachment 1 compounds using the air detection limits to verify that each sampler was free of contamination. The blanks were collected by pumping zero air through each sampler into a stainless steel canister; if contamination was detected, the sampler was recleaned and retested.

Before conducting the field work for this project, another set of equipment blanks were collected from the ambient air samplers to be used during the project. The blanks were collected using ultrapure zero air that was bled through the sampler for a six-hour sampling period. They were analyzed for the Attachment 1 compounds using the air DLRs. Table 8-2 presents the results of these analyses and Appendix E contains analytical reports and chain-of-custody documentation for the blank samples.

In general, the results of the presampling blanks indicate that the samplers were clean at the beginning of the field effort. While dichloromethane ($MeCl_2$) and tetrachloroethene (PCE) were detected in some of the blanks, the concentrations were close to the ARB DLRs for these compounds. In no case did the concentration of an Attachment 1 compound in a presampling blank exceed 1.5 times its DLR. All but two of the sampler blanks had $MeCl_2$ at concentrations ranging from 1.1 to 1.3 ppb_v. The DLR for this compound is 1.0 ppb_v. One of the sampler blanks had PCE at 0.24 ppb_v; the DLR for this compound is 0.20 ppb_v. One of the sampler blanks had no Attachment 1 compounds above the ARB designated DLRs.

Throughout the program, the laboratory analyzes canister blanks to ensure that the decontamination procedures being used to clean the sample vessels are satisfactory. The laboratory analyzes canister blanks for 10 percent of the recycled canisters by filling them with zero air and analyzing a sample of it for the Attachment 1 compounds using the air DLRs. If any contamination is detected, the decontamination procedures are improved and the canister is recleaned and retested.

After completing the landfill gas sampling, a field system blank was collected for the migration and landfill gas sampler by pumping zero air through the decontaminated sampling system and collecting it in a stainless steel canister. The blank was collected and handled the same way as the gas samples. It was submitted to the laboratory where it was analyzed for the Attachment 1 compounds, using the air DLRs.

As shown in Table 8-3, the blank collected during the field sampling contained 13 ppb_v $MeCl_2$. $MeCl_2$ and freon are common contaminants of flow controllers because they are used to clean the controller parts at the time they are being assembled. Flow controllers are used in both the field sampling and analytical

TABLE 8-2. Ambient air presampling equipment blank results, Magazine Road Landfill.

Sampler No. :		AV01	AV03	AV04	AV06	AV08	AV09
Date Sampled :		5-10-90	4-26-90	5-10-90	4-26-90	5-10-90	4-26-90
Date Analyzed :		5-15-90	4-28-90	5-12-90	4-28-90	5-12-90	4-28-90
Sample ID :		ET-IA-00-01	ET-IA-00-03	ET-IA-00-04	ET-IA-00-06	ET-IA-00-08	ET-IA-00-09
Laboratory No. :		00467	00335	00440	00328	00441	00331
Compound	DLR $(ppb)_v$	Sample Concentration $(ppb)_v$					
Vinyl Chloride	2.00	ND	ND	ND	ND	ND	ND
Dichloromethane	1.00	ND	1.3	1.1	1.2	ND	1.1
Chloroform	0.80	ND	ND	ND	ND	ND	ND
1,1,1-Trichloroethane	0.50	ND	ND	ND	ND	ND	ND
1,2-Dichloroethane	0.20	ND	ND	ND	ND	ND	ND
Benzene	2.00	ND	ND	ND	ND	ND	ND
Carbon Tetrachloride	0.20	ND	ND	ND	ND	ND	ND
Trichloroethene	0.60	ND	ND	ND	ND	ND	ND
1,2-Dibromoethane	0.50	ND	ND	ND	ND	ND	ND
Tetrachloroethene	0.20	0.24	ND	ND	ND	ND	ND

ND = Not Detected
ppb_v = Parts per Billion Volumetric
DLR = Detection Limits for Reporting Purposes

TABLE 8-3. Field quality control results, Magazine Road Landfill.

Sample Type / Location :	24 hr/dwnwnd	24 hr c/dwnwnd		24 hr/dwnwnd	24 hr c/dwnwnd		24 hr/dwnwnd	24 hr c/dwnwnd		Field Blank
Date Sampled :	5-16-90	5-16-90		5-17-90	5-17-90		5-18-90	5-18-90		5-15-90
Date Analyzed :	5-18-90	5-18-90		5-21-90	5-21-90		5-24-90	5-21-90		5-19-90
Sample ID :	MR-IA-01-03	MR-IA-C1-04		MR-IA-02-03	MR-IA-C2-04		MR-IA-03-03	MR-IA-C3-04		MR-LG-00-02
Laboratory No. :	00503	00504		00509	00511		00517	00516		00500
Compound	DLR (ppb)v	-Sample Concentration (ppb)v-		RPD —%—	-Sample Concentration (ppb)v-		RPD —%—	-Sample Concentration (ppb)v-		RPD —%—	Concentration (ppb)v
Vinyl Chloride	2.00	ND	ND	NA	ND	ND	NA	ND	ND	NA	ND
Dichloromethane	1.00	1.7	3.8	NA	1.1	ND	NA	ND	ND	NA	1.3
Chloroform	0.80	ND	ND	NA	ND	ND	NA	ND	ND	NA	ND
1,1,1-Trichloroethane	0.50	0.83	2.2	NA	ND	ND	NA	1.1	ND	NA	ND
1,2-Dichloroethane	0.20	ND	ND	NA	ND	ND	NA	ND	ND	NA	ND
Benzene	2.00	ND	ND	NA	ND	ND	NA	ND	ND	NA	ND
Carbon Tetrachloride	0.20	ND	ND	NA	ND	ND	NA	ND	ND	NA	ND
Trichloroethene	0.60	ND	ND	NA	ND	ND	NA	ND	ND	NA	ND
1,2-Dibromoethane	0.50	ND	ND	NA	ND	ND	NA	ND	ND	NA	ND
Tetrachloroethene	0.20	0.34	0.22	NA	ND	ND	NA	0.39	ND	NA	ND

ND = Not Detected
NA = RPD Not Calculated
ppb_v = Parts per Billion Volumetric
DLR = Detection Limits for Reporting Purposes

systems. Periodically, $MeCl_2$ has been measured in association with freon in the field system blanks as the result of flow controller offgassing. It is likely that the $MeCl_2$ observed in the field system blank collected during the Magazine Road Landfill study was similarly introduced and is not indicative of inadequate decontamination procedures.

The field equipment blank collected during the time period when the resampling of probes LG-01 and LG-02 occurred contained $MeCl_2$ in concentrations similar or higher than the repeat samples. This indicates that either sampling or laboratory system contamination existed and these results are viewed as suspect.

The integrated air and landfill/migration gas sampling systems used at Magazine Road Landfill are similar in design and construction. The landfill/migration gas sampler was chosen for the field system blank because it provides a worst-case test, since the landfill and migration gas samples are expected to have the highest concentrations of the chemicals of interest.

In summary, the system blank collected at the Magazine Road Landfill contained $MeCl_2$ at a concentration near its air DLR but well below its disposal DLR. The $MeCl_2$ detected in repeat samples from probes LG-01 and LG-02 is viewed as suspect because of sampler or laboratory contamination. In general, good sample quality was preserved throughout the Magazine Road study.

- **Analytical Measurements**

Analytical accuracy is determined from spike analyses and interlaboratory comparisons. Accuracy can be expressed as a percent difference as follows:

$$\text{Percent Difference} = \frac{Y - X}{X} \times 100$$

where: Y = the measured concentration of the spike
X = the true concentration of the spike

At least one out of every ten samples analyzed was a spike or duplicate. The spike is a reference standard that is representative of the landfill gas, migration gas or ambient air samples being analyzed. The spike is analyzed by a separate laboratory to evaluate analytical accuracy and interlaboratory precision. Table 8-1 lists the QA objectives for analytical accuracy.

Analytical accuracy is also monitored by daily check standards and instrument blanks, three-point and five-point calibration curves, and monthly routine maintenance and quality assurance checks. The latter include system leak checks, volume calibration checks, column performance checks, retention time checks and precision checks.

8.1.3 Precision

Precision is a measure of mutual agreement among individual measurements of the same property, usually under prescribed similar conditions. It is often expressed in terms of the standard deviation of the measurement or relative percent difference (EPA, 1980).

For the field sampling methods and the laboratory analytical methods, precision is quantified as the relative percent difference (RPD), which is calculated by the following equation:

$$\text{Precision (RPD)} = \frac{X_1 - X_2}{X_2} \times 100$$

where: X_1 = the larger of the two replicate values
X_2 = the smaller of the two

Laboratory precision of several pairs of duplicate or replicate samples is determined as the relative standard deviation (RSD). It is calculated as follows:

$$\text{Precision (RSD)} = \frac{s}{X}$$

where: s = the standard deviation of the sample concentrations
X = the mean of the sample concentrations

Table 8-1 lists the precision objectives for the field and laboratory measurements. Sample concentrations that are less than five times the detection limit are not expected to meet the precision objectives and are not included in precision calculations, because small differences in low concentrations result in large relative percent differences. For example, using the equation presented above, the relative percent difference between 0.1 and 0.2 ppb is 100 percent.

- **Field Measurements**

To ensure precise sample collection, uniform sampling containers that were cleaned and prepared using the same protocol were used throughout the Magazine Road Landfill sampling program, as were uniform sampling methods and uniform sample handling and transporting procedures. Field sampling precision is evaluated for collocated integrated ambient air sample analysis and sample flow rates.

Collocated Sample Precision. Collocated samples were collected during the 24-hour ambient air sampling periods. They were analyzed for the Attachment 1 compounds using the air detection limits. They were collected, handled, and analyzed the same way as the primary samples. Table 8-3 shows the

precision results for the collocated samples. None of the duplicate samples contained Attachment 1 compounds at concentrations greater than five times the corresponding MDL. Because of this, we did not calculate RPDs for these samples.

The analytical results for the primary and collocated 24-hour integrated air samples correlate well. As discussed in Section 8.1.2, $MeCl_2$ and 1,1,1-trichloroethene (TCA) were detected at low levels in the presampling equipment blanks. Accordingly, the low levels of these compounds detected in the Magazine Road Landfill air samples may partially reflect low level system contamination.

Sample Flow Rate Precision. Flow rate precision was evaluated for the integrated air samples collected during the Magazine Road Landfill study (Table 8-4). It was calculated as the relative percent difference (RPD) of the initial and final flow rates and evaluated using the final canister pressure. To collect a sample, the flow rate was adjusted so that the final pressure of the sample canister would be approximately 5 to 7 pounds per square inch (psig). When the final pressure exceeds 10 psig, the sample is not properly integrated. Samples were considered to be properly integrated when either the flow rate RPD was less than 15 percent or the initial or final flow rate, and the final canister pressure evidenced that a constant flow rate was maintained during most of the sample collection.

The initial and final flow rates for all but four of the ambient air samples collected at the Magazine Road Landfill had a RPD of less than 15 percent. The RPDs for these samples ranged from 16.7 to 21.4 percent. However, the sample had a final canister pressures ranging from 5.5 to 7.0 psig. Therefore, all of the samples collected during the Magazine Road study are considered to be integrated properly.

- **Analytical Measurements**

Analytical precision is determined from duplicate analysis. At least one of every ten samples analyzed is a duplicate or a spike. The laboratory duplicate is an actual air sample that is representative of the landfill gas, migration gas or ambient air samples being analyzed. Table 8-1 lists the objectives for analytical precision.

8.1.4 Completeness

Completeness is a measure of the amount of valid data obtained from a measurement system compared to the amount that was expected to be obtained under correct normal conditions (EPA, 1980). It is calculated as the ratio of acceptable measurements obtained to the total number of planned measurements.

TABLE 8-4.

Sample flow rates and final canister pressures
Magazine Road Landfill.

Sample Identification Number	Initial Flow Rate (cc/min)	Final Flow Rate (cc/min)	Relative Percent Difference (%)	Initial Canister Vacuum (in Hg)	Final Canister Pressure (psig)	Sampling Period (Hrs)
MR-IA-01-09	3.3	3.9	18.2	30	6.0	22.8
MR-IA-01-03	3.0	3.5	16.7	29	6.0	23.0
MR-IA-C1-04	2.8	3.4	21.4	29	5.5	23.0
MR-IA-02-09	2.7	2.3	14.8	30	6.5	23.9
MR-IA-02-03	2.7	2.7	0.0	29	7.0	24.0
MR-IA-C2-04	3.1	2.5	19.4	30	7.0	24.0
MR-IA-03-09	2.7	2.7	0.0	30	7.5	24.0
MR-IA-03-03	2.7	2.5	7.4	29	7.5	24.0
MR-IA-C3-04	2.5	2.7	8.0	30	5.5	24.0
MR-IA-D1-08	17.1	17.7	3.5	28	7.0	4.0
MR-IA-D1-01	16.7	17.7	6.0	30	5.0	4.0
MR-IA-D2-08	16.5	18.1	9.7	29	5.0	4.0
MR-IA-D2-01	16.5	18.2	10.3	30	6.0	4.0
MR-IA-D3-08	16.5	17.9	8.5	28	7.0	4.0
MR-IA-D3-01	16.7	16.3	2.4	29	4.5	4.0

- **Field Measurements**

Field sampling and measurement completeness is adversely affected by problems with sample recovery or instrument malfunctions. Data are invalidated when the duration of the sample collection cannot be verified or the sampler breaks during the sampling period. To avoid problems that might have affected field completeness, difficult and unexpected situations were prepared for before starting the field testing. Such preparations included identifying potential access problems, regularly performing maintenance on sampling equipment and field instrumentation, bringing spare parts and equipment to the field and keeping them readily available, and training the field team members to perform basic repairs. The overall completeness goal for the field program is 90 percent. Field completeness for the Magazine Road study was 100 percent.

- **Analytical Measurements**

Analytical completeness is affected when a sample is damaged during unpacking or storage, when it is not analyzed before its holding time is expired, or when the laboratory data cannot be validated as described in Section 9.2 and the sample cannot be reanalyzed. The overall completeness goal for the analytical program is 90 percent. Analytical completeness for the Magazine Road study was 100 percent.

8.2 ADDITIONAL LABORATORY QUALITY CONTROL STUDIES

EAS Laboratory conducted three additional quality control studies to verify that the sample collection and analysis methods used throughout the Calderon program would provide quality data. The results of the studies are contained in Appendix B. The first study demonstrated that the Attachment 1 compounds are stable in the electropolished stainless steel sample canisters for more than the 120-hour sample holding time. The second study confirms the fact that the use of a Nafion dryer for removing atmospheric water vapor from the Calderon samples before analysis does not affect the analytical results. Finally, the third study reports the accuracy and precision of the total measurement process. It contains the results of a field test during which a spike was introduced into six separate sampling systems and collected into unique sample containers. Each container was analyzed for the Attachment 1 compounds by gas chromatography using a mass spectrometer detector. The accuracy and precision reported are the cumulative result of variability in sample collection, analytical instrument calibration, and sample analysis.

Section 9

DATA REDUCTION, VALIDATION, AND STORAGE

9.1 FIELD DATA

Field data and meteorological conditions were recorded in field and instrument log books and on appropriate data forms. Following sample collection, the field team member reduced any associated meteorological data and verified that the required weather conditions existed throughout the sampling period. After each day of field activities, all field data were reviewed by the field team leader for deficiencies or suspected inaccuracies. If problems were identified, the field team leader worked with the team member to correct or amend the log book or data forms. Before reporting, time readings were converted to standard time and field measurement, meteorological and laboratory data were converted to accepted standard units. Following completion of the landfill investigation, original copies of the field data were given to the data administrator. Appendix C contains examples of the field sample documentation for the Magazine Road Landfill Air SWAT.

9.2 LABORATORY DATA

Laboratory data were validated by blank, duplicate and spike sample analysis. Analyses were repeated when the blank level was elevated, causing the detection limit to be in the quantitative area of interest, or the laboratory quality assurance objectives for accuracy and precision were not met.

At the completion of each set of analyses, the laboratory data were recorded in logbooks and placed in a data file. The analyst entered the associated quality control data onto quality control charts and verified them as being within control limits. Once verified, the data were transferred to the laboratory director for review. The director reviewed the data calculations for accuracy. Following his approval, the data were prepared for reporting. Appendix D contains the laboratory data reports for the Magazine Road Landfill Air SWAT.

Section 10

REFERENCES

AeroVironment Inc. (1988): Calderon air SWAT monitoring plan and quality assurance project plan. AV Document AV-ST-R-88-603.

Brown and Caldwell (1986): Initial Assessment Study, Marine Corps Air Station, El Toro, California. May.

Environmental Protection Agency (1980): Interim Guidelines and Specifications for Preparing Quality Assurance Project Plans. EPA Document QAMS-005/80.

Fife, D.L. (1974): Geology of the south half of the El Toro Quadrangle, Orange County, California. California Division of Mines and Geology Special Report 204.

Harsch, D.E. (1980): Evaluation of a versatile gas sampling container design. Atmos. Environ., 14:1105-1107.

Hoyt, S.D., and R.A. Rasmussen (1985): Determining trace gases in air and seawater. In Mapping Strategies in Chemical Oceanography, ACS Advances in Chemistry Series 209. Washington, D.C.: American Chemical Society.

James M. Montgomery, Consulting Engineers, Inc. (1987): Confirmation Study, Marine Corps Air Stations Tustin and El Toro. October.

Keith, R.W. (1980): A climatological-air quality profile of the California South Coast Air Basin. Prepared for the South Coast Air Quality Management District, El Monte, California.

Keith, R.W., and B. Selik (1977): California South Coast Air Basin hourly wind flow patterns. Prepared for the South Coast Air Quality Management District, El Monte, California.

Morton, P.K., and R.V. Miller (1981): Geologic Map of Orange County showing mines and mineral deposits. California Division of Mines and Geology Special Report 204.

Oliver, K.D., J.D. Pleil, and W.A. McClenny (1986): Sample integrity of trace level volatile organic compounds in ambient air stored in SUMMA polished canisters. Atmos. Environ., 20:1403-1411.

Rasmussen, R.A., and M.A.K. Khalil (1980): Atmospheric halocarbons measurements and analysis of selected trace gases. Proceedings, NATO ASI on Atmospheric Ozone, pp. 209-231.

Rasmussen, R.A., and J.E. Lovelock (1983): The atmospheric lifetime experiment, 2. Calibrations. J. Geophys. Res., 88:8369-9378.

Trewartha, G.T. (1968): An Introduction to Climate, Fourth Edition, McGraw-Hill.

Westberg, H., W. Lonneman, and M. Holdren (1984): Analysis of individual hydrocarbons species in ambient atmospheres: Techniques and data validity. In Identification and Analysis of Organic Pollutants in Air, L.H. Keith, Ed. Woburn, MA: Butterworth, pp. 323-327.

United Stated Department of Agriculture Soil Conservation Service and Forest Service (1978): Soil survey of Orange County and western part of Riverside County, California.

Appendix A

PHOTOGRAPHS

24 hour integrated collocated and drainage samplers.

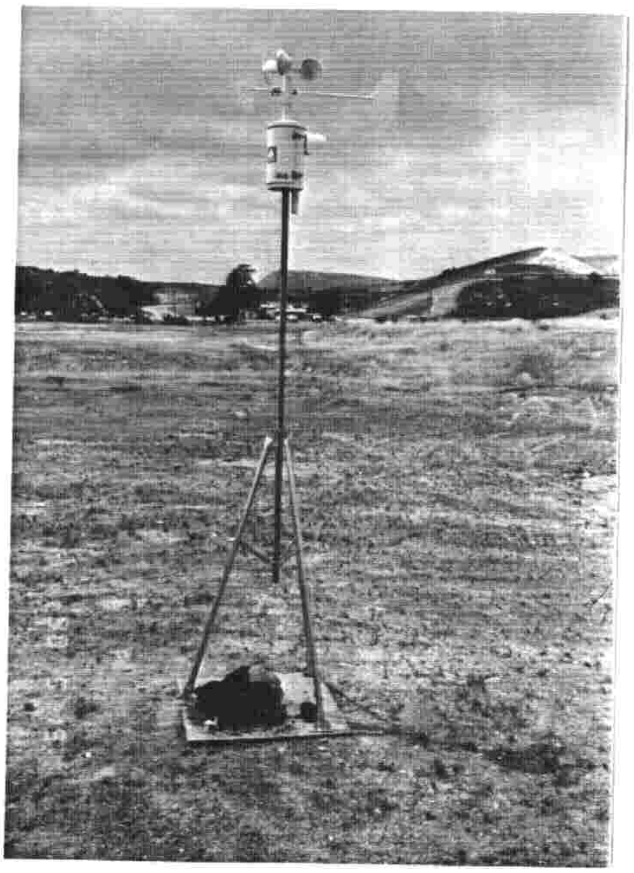

Mechanical weather station.

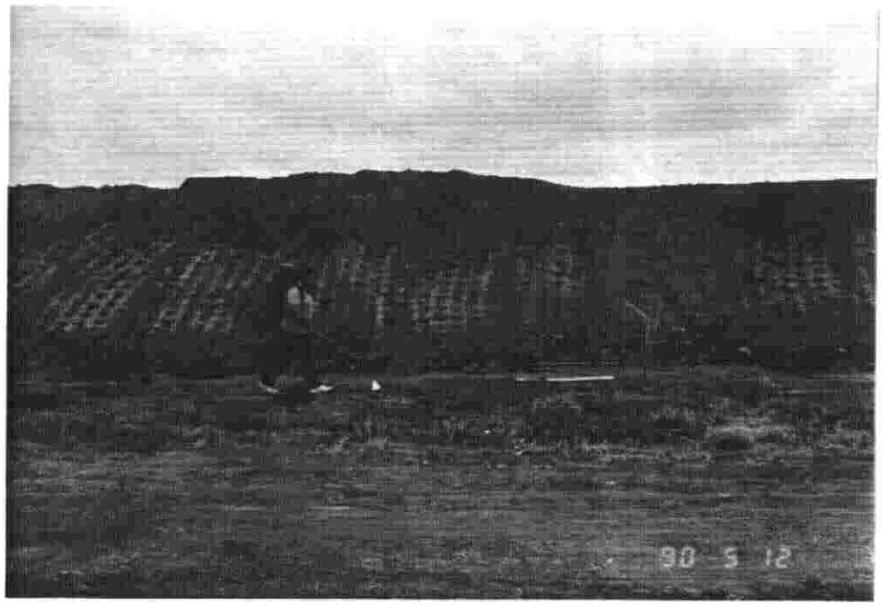

Integrated surface sample (Moffett Trenches Landfill).

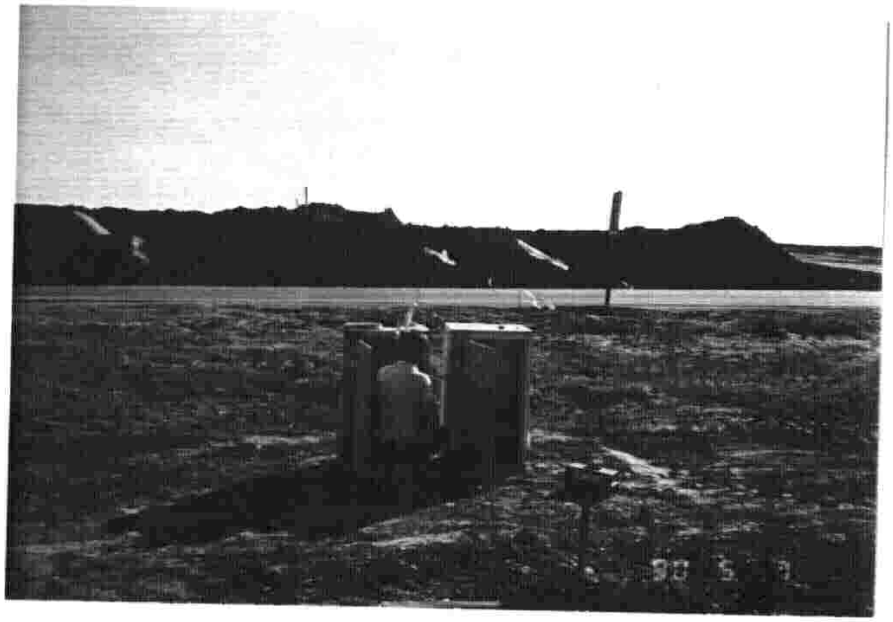

Checking sample flow rate (Moffett Trenches Landfill).

Installing landfill gas probe.

Landfill gas/migration gas probe sampler.

Appendix B

LABORATORY QUALITY CONTROL STUDIES

ENVIRONMENTAL ANALYTICAL SERVICE

ITEM NUMBER 1

The stability of the Calderon compounds in a typical 3.2 Liter SS Sample Canister is shown on the next page. The study is not the result of an exaustive research program but does demonstrate that there is no significant change in concentration. For more detailed studies reference should be made to the McClenny EPA study (1986) which demonstrated stability of all of these compounds in identical canisters.

2676 Froelich #5, San Luis Obispo, CA 93401

ENVIRONMENTAL ANALYTICAL SERVICE

CANISTER STABILITY STUDY
GC/MS

Plan #77 Compound	12-12-88	12-31-88
	Sample Concentration ppbv	
Vinyl Chloride	58	55
Dichloromethane	7.1	5.7
Chloroform	0.49	0.48
1,1,1-Trichloroethane	0.57	0.6
1,2-Dichloroethane	1.3	1.5
Carbon Tetrachloride	0.41	0.56
Benzene	4.5	3.4
Trichloroethene	0.49	0.39
Toluene	0.87	1.1
Tetrachloroethene	0.33	0.37

*1.2 liter stainless steel canister

3576 Empleo, #5, San Luis Obispo, CA 93401

Atmospheric Environment Vol. 20, No. 7, pp. 1403–1411, 1986.
Printed in Great Britain.

0004-6981/86 $3.00 + 0.00
Pergamon Journals Ltd.

SAMPLE INTEGRITY OF TRACE LEVEL VOLATILE ORGANIC COMPOUNDS IN AMBIENT AIR STORED IN SUMMA® POLISHED CANISTERS

KAREN D. OLIVER* and JOACHIM D. PLEIL
Northrop Services, Inc.-Environmental Sciences, P. O. Box 12313, Research Triangle Park, NC 27709, U.S.A.

and

WILLIAM A. MCCLENNY
Methods Development Branch, Environmental Monitoring Systems Laboratory, U.S. Environmental Protection Agency, Research Triangle Park, NC 27711, U.S.A.

(*First received* 19 *August* 1985 *and in final form* 19 *December* 1985)

Abstract—*Sets of new and used* SUMMA® polished stainless steel canisters were tested for storage stability of volatile organic compounds (VOCs). Evacuated canisters were filled at a controlled rate with ambient air containing added concentrations of 15 VOCs (14 chlorinated, one bromoalkane) at < 2 ppbv. Concentrations of VOCs in each canister were then periodically determined during 7-day or 30-day storage periods using simultaneous flame ionization and electron capture detection. No initial decreases in concentrations of target compounds were observed. Statistical analysis of data showed that the relative standard deviation of concentrations of most VOCs in each canister set was 10% or less during the storage periods. For the 7-day tests, the mean change in concentration per day was within ± 3.2%. These canisters appear suitable as an alternative to other sampling techniques, at least for most of the compounds tested here.

Key word index: Volatile organic compounds, ambient air, SUMMA® polished containers, stainless steel canisters.

INTRODUCTION

The accurate determination of trace level volatile organic compounds (VOCs) in ambient air requires sophisticated instrumentation. To avoid the cost, inconvenience and difficulty of transporting such equipment to sampling sites, field samples are collected in stainless steel canisters and returned to a central laboratory for analysis. Stainless steel canisters are not subject to sample permeation or photo-induced chemical effects, and they can be reused after a simple clean-up procedure. Interior surfaces of these stainless steel canisters are passivated using the Molecatrics SUMMA® process.

Various sample integrity studies of gases stored in SUMMA® polished stainless steel canisters have been conducted in other laboratories. Harsch (1980) reported stability of a number of halocarbons stored in canisters at parts per trillion by volume levels. Cox (1983) has discussed the storage stabilities of certain hydrocarbons in canisters at concentrations greater than 250 ppbv. Also, Rasmussen and Khalil (1980) and Rasmussen and Lovelock (1983) have used stainless steel canisters extensively in the field and have reported the stability of halocarbons stored in canisters at high pressures for extended periods. Westberg *et al.* (1984) reported stability of parts per billion by volume levels of benzene and toluene in canisters, but observed losses of *o*-xylene. A comparison of sampling containers, including stainless steel canisters, was reported by Pellizzari *et al.* (1984). They observed an initial decrease in concentrations of halocarbons stored in canisters, which our tests did not confirm. The sample storage characteristics of stainless steel canisters were previously tested in this laboratory using a mixture of 15 VOCs in humidified zero air. These results were documented in an EPA contract report from Battelle Columbus Laboratories (Holdren *et al.*, 1984).

This work reports more detailed experiments that have been conducted using ambient air spiked with less than 2 ppbv of each of 15 VOCs in both new and used stainless steel canisters. The mixtures were initially stored at ~ 30 psig in the canisters. These experiments were designed to test sample stability under anticipated field sampling conditions in which compounds such as H_2O, CO_2, O_3, NO and NO_2 would be present.

*Author to whom correspondence should be addressed.

vacuum gauge was used for measuring vacuum. This cleaning process usually required 5–6 h.

Test procedures

Before beginning the sample integrity experiments, all new and used canisters were cleaned. Humidified zero air was passed through the pump, mass flow controller, and tubing of the canister-filling apparatus and analyzed for comparison with chromatograms of instrument background to ensure that the filling apparatus would not contaminate samples. (Chromatograms of instrument background were obtained by passing zero grade air or nitrogen through a 500 ml impinger flask of water, through a mass flow controller, and into the analysis system.) The canisters were then pressurized to 15–20 psig with humidified zero gas. Samples from each canister were analyzed and compared with instrument background. All canisters were cleaned again at least once before beginning the experiments.

For the sample integrity experiments, spiked ambient air samples were obtained by pulling ambient air from a parking area through a glass 'candy-cane' inlet to the sampling manifold at a rate of 40 $l\ min^{-1}$. The standard mixture of 15 VOCs in cylinder 2 was bled through tubing to the candy-cane inlet area at a rate of 12 $ml\ min^{-1}$ during the canister filling period. This procedure was designed so that ambient air spiked with roughly 1 ppbv of each of the 15 compounds would be available in the sampling manifold.

To test initial sample integrity, used 6-l canisters were pressurized individually with spiked ambient air from the sampling manifold. For these experiments, canisters were filled at a rate of 1.2 $l\ min^{-1}$ for 14 min to exactly coincide with the 14-min sample collection cycle of the analytical system. As soon as the analysis of the real-time sample was completed, an air sample from the canister was analyzed. This experiment was performed eight times.

Four sets of sample integrity experiments were then performed at separate times using the same procedure. The following sets of canisters were evaluated over a 7-day period in separate experiments: four new 6-l canisters, four new 3-l canisters, and five used 6-l canisters. A fourth set of three used 6-l canisters was also evaluated over a 30-day period.

The instrument was calibrated before beginning each experiment. On Day 0 of each experiment, canisters were pressurized simultaneously to approximately 32 psig with the spiked ambient air mixture from the sampling manifold. Canisters were filled in the mornings during peak traffic activity. Control samples from the sampling manifold were analyzed continually during the filling cycles to provide an estimate of VOC concentrations placed in the canisters. Each analysis required 64 min, so control samples were taken approximately at hourly intervals. A graph of the 14-min control sampling periods within the filling cycles for each canister set is shown in Fig. 2. Air samples from each canister in the 7-day test were analyzed on Days 0, 2, 4 and 7 after filling the 6-l canisters and on Days 0, 4 and 7 after filling the 3-l canisters. Samples from canisters in the 30-day test were analyzed on Days 1, 15 and 30 after filling. Calibrations were conducted on each day of the experiments.

RESULTS AND DISCUSSION

Canister blank tests

Before beginning the sample integrity study, each canister was cleaned and filled with humidified zero

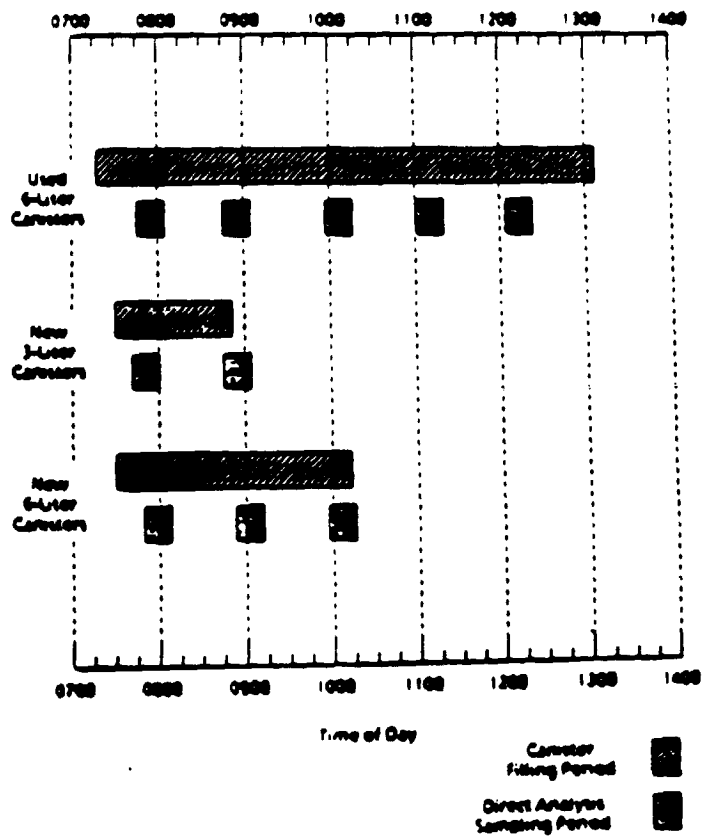

Fig. 2. Time periods for filling canisters and for simultaneous control analyses during the filling period.

Table 2. Sample integrity results for four new 3-ℓ canisters tested on Days 0, 4 and 7

Compound	Control samples Mean (ppbv) (N = 2)	Canister samples Mean (ppbv) (N = 12)	S.D. (ppbv)	Mean % change/day
FID				
vinyl chloride	0.71	0.74	0.07	−0.946
vinylidene chloride	0.98	2.32	0.35	−2.20
trichlorotrifluoroethane	0.98	1.04	0.08	−1.44
chloroform	1.05	1.19	0.37	3.03
1,2-dichloroethane	0.88	0.88	0.04	−1.02
methyl chloroform	1.27	1.28	0.05	−0.547
benzene	0.31	0.35	0.01	−0.286
carbon tetrachloride	0.99	0.91*	0.01	—
trichloroethylene	0.97	0.98	0.05	−0.816
cis-1,3-dichloropropene	0.48	0.47	0.03	−1.49
trans-1,3-dichloropropene	0.37	0.37	0.03	−1.35
toluene	0.47	0.51	0.02	−0.196
1,2-dibromoethane	1.07	1.00	0.06	−1.40
tetrachloroethylene	1.21	1.06	0.06	−1.23
chlorobenzene	0.87	0.85	0.06	−1.76
o-xylene	0.12†	0.09	0.03	1.11
benzyl chloride	1.05	0.94	0.10	−2.77
hexachlorobutadiene	1.14	1.19	0.15	−2.77
ECD				
trichlorotrifluoroethane	1.01	1.02	0.02	0.294
chloroform	1.04	1.00	0.02	−0.400
methyl chloroform	1.21	1.20	0.01	0.000
carbon tetrachloride	1.23	1.24	0.04	0.645
trichloroethylene	1.06	1.05	0.02	0.190
1,2-dibromoethane	1.09	1.05	0.06	−1.14
tetrachloroethylene	1.21	1.16	0.08	1.64
hexachlorobutadiene	1.01	1.02	0.05	0.882

*N = 2, †N = 1.

canisters, mean concentrations for control samples were typically within 0.05 ppbv of the mean concentrations for canister samples. Because these differences were of the same magnitude as the standard deviations of the canister data, the control data and the canister data were essentially identical. Daily drift values (given as a numerical indicator of temporal stability) were calculated by normalizing slopes of linear regression plots to obtain a percent-per-day change, i.e. slope divided by mean concentration. For the 7-day storage tests, the mean change was within ±3.2% per day, and concentrations of most compounds changed within ±1% per day. With the exception of o-xylene, daily drifts for most compounds in the 30-day test were equivalent to those observed in 7-day tests. For each set of canisters, the mean percentage change/day for compounds on one detector was consistently either slightly positive or negative, whereas the mean percentage change/day of compounds on the other detector was consistently the opposite. This is most likely due to a slight change in the FID/ECD split ratio rather than a canister storage problem. This phenomenon had been previously encountered during analyses that did not involve canisters.

Typical concentrations of compounds in individual canisters are presented in Table 5. As examples, FID and ECD data are tabulated for tetrachloroethylene stored in used 6-ℓ canisters, and FID data are tabulated for chlorobenzene stored in new 3-ℓ canisters. The data are representative of all experiments and show that concentrations of compounds were reproducible for individual canisters.

A comparison of the relative standard deviation (R.S.D.), i.e. standard deviation divided by the mean, for data from canister tests and calibrations is presented in Table 6. For the majority of target compounds in each canister set, the R.S.D. of concentrations was 10% or less when all results of canister sample analyses were averaged for each compound. A statistical evaluation of calibration response factors (ppbv/area counts) has shown the instrumental error to average approximately 3.6% R.S.D. for the ECD and 6.6% R.S.D. for the FID over a 6-week period. The R.S.D.s of calibration response factors for individual compounds are presented in Table 6. In most cases the percent R.S.D. for compounds in the canisters was similar to the percent R.S.D. for the calibrations. Approximately one-third of the compounds exhibited somewhat greater scatter in data during the 30-day tests than in the 7-day tests.

FID data for vinylidene chloride, chloroform, o-xylene, benzyl chloride and hexachlorobutadiene were

Table 4. Sample integrity results for three used 6-ℓ canisters tested on Days 1, 15 and 30

Compound	Control samples Mean (ppbv) (N = 5)	Canister samples Mean (ppbv) (N = 9)	S.D. (ppbv)	Mean % change/day
FID				
vinyl chloride	0.81*	—	—	—
vinylidene chloride	1.11	1.09	0.07	−0.14
trichlorotrifluoroethane	1.13	1.13	0.09	−0.44
chloroform	1.19	1.32	0.45	1.14
1,2-dichloroethane	0.90	0.93	0.06	−0.40
methyl chloroform	1.41	1.41	0.09	−0.37
benzene	0.57	0.61	0.03	0.18
carbon tetrachloride	0.94†	0.87	0.09	−0.49
trichloroethylene	1.01	1.02	0.05	−0.38
cis-1,3-dichloropropene	0.49	0.50	0.04	0.12
trans-1,3-dichloropropene	0.38‡	—	—	—
toluene	0.99	1.01	0.12	0.67
1,2-dibromoethane	1.23	1.23	0.07	0.10
tetrachloroethylene	1.09	1.09	0.03	−0.10
chlorobenzene	0.97	0.97	0.04	0.24
o-xylene	0.14§	0.23	0.15	4.40
benzyl chloride	0.75	0.84	0.09	0.36
hexachlorobutadiene	0.96	1.05	0.20	1.17
ECD				
trichlorotrifluoroethane	0.99	0.97	0.02	−0.18
chloroform	1.02	0.97	0.03	−0.21
methyl chloroform	1.20	1.19	0.02	−0.14
carbon tetrachloride	1.52	1.59	0.07	−0.30
trichloroethylene	1.01	1.00	0.02	−0.07
1,2-dibromoethane	0.84	0.87	0.04	0.11
tetrachloroethylene	0.97	1.01	0.05	0.34
hexachlorobutadiene	0.96	0.98	0.10	0.53

* N = 2, † N = 4, ‡ N = 3.

Table 5. Typical examples of data for canister samples*

a. FID—tetrachloroethylene†

Day	CAN 106	CAN 04	CAN 11	CAN 15	CAN 190
0	1.01	1.06	1.00	1.01	1.04
2	0.94	0.99	1.00	1.00	1.01
4	0.96	0.95	0.95	—‡	0.96
7	1.04	0.97	1.00	1.11	1.05

b. ECD—tetrachloroethylene†

Day	CAN 106	CAN 04	CAN 11	CAN 15	CAN 190
0	0.97	1.00	1.01	1.00	1.00
2	1.00	0.99	0.98	0.98	0.96
4	0.99	1.00	0.95	—‡	0.85
7	0.98	1.01	1.00	0.99	0.99

c. FID—chlorobenzene§

Day	CAN 5	CAN 6	CAN 7	CAN8
0	0.89	0.92	0.95	0.96
4	0.80	0.80	0.79	0.80
7	0.81	0.82	0.84	0.87

* Values expressed as parts per billion by volume. † Stored in used 6-ℓ canisters. ‡ Data for this run not available due to column blockage. § Stored in new 3-ℓ canisters.

chromatographic determination of volatile organic compounds in air. *Analyt. Chem.* 56, 2947–2951.

Pellizzari E. D., Gutknecht W. F., Cooper S. and Hardison D. (1984) Evaluation of sampling methods for gaseous atmospheric samples. Final report on EPA Contract No. 68-02-2991 to Research Triangle Institute, Research Triangle Park, NC.

Pleil J. D. and Oliver K. D. (1985) Evaluation of various configurations of Nafion dryers: water removal from air samples prior to gas chromatographic analysis. Technical Note 85-03. Northrop Services, Inc.-Environmental Sciences, Research Triangle Park, NC.

Rasmussen R. A. and Khalil M. A. K. (1980) Atmospheric halocarbons: measurements and analyses of selected trace gases. *Proc. NATO ASI on Atmospheric Ozone*, pp. 209–231.

Rasmussen R. A. and Lovelock J. E. (1983) The atmospheric lifetime experiment—2. Calibrations. *J. geophys. Res.* 88, 8369–8378.

Westberg H., Lonneman W. and Holdren M. (1984) Analysis of individual hydrocarbon species in ambient atmospheres: techniques and data validity. In *Identification and Analysis of Organic Pollutants in Air* (edited by Keith L. H.), pp. 323–327. Butterworth, Woburn, MA.

ENVIRONMENTAL ANALYTICAL SERVICE

ITEM NUMBER 2

A suitablity study using the Nafion Dryer to remove atmospheric water vapor is shown on the next page. This was the result of a study on a single sample and shows some variability. This variability is due in part to difficulty of running a spike without water vapor removal. This preliminary information shows that the Nafion dryer is suitable for ambient air analysis (This has also been confirmed studies conducted at OGC). Additional work is currently in progress to improve the data set for the dryer comparison.

ENVIRONMENTAL ANALYTICAL SERVICE

NAFION DRYER STUDY
GC/MS

Compound	500ml with dryer Sample Concentration ppbv	500ml without dryer
Vinyl Chloride	8.01	[illegible]
Dichloromethane	5.55	[illegible]
Chloroform	1.87	[illegible]
1,1,1-Trichloroethane	2.67	0.88
1,2-Dichloroethane	4.28	[illegible]
Carbon Tetrachloride	2.34	1.87
Benzene	7.37	5.16
Trichloroethene	4.36	[illegible]
1,2-Dibromoethane	----	
Tetrachloroethene	6.15	5.64

Item Number 3

SPIKED SAMPLER STUDY

Environmental Analytical Service
SPIKED SAMPLER MONTHLY WORKSHEET

December 31, 1987

Samples Collected in 3.2 Liter SS Sample Canisters

Compound Sample Site Number	Spike B106	Concentration ppbv 1	2	3	4	5	6	RSD %
Vinyl Chloride	377.0	530.0	355.0	396.0	381.0	264.0	310.0	22
Dichloromethane	39.0	40.0	32.0	36.0	37.0	23.0	30.0	17
Chloroform	3.8	3.5	3.3	3.5	3.2	2.4	3.1	12
Methylchloroform	28.0	34.0	27.0	29.0	25.0	21.0	27.0	14
1,2-Dichloroethane	11.0	----	7.8	8.7	7.1	6.3	7.9	11
Benzene	31.0	29.0	22.0	27.0	25.0	17.0	22.0	16
Carbon Tetrachloride	3.6	3.5	3.1	3.4	3.1	2.2	2.9	14
Trichloroethene								
Toluene	3.3	5.6	3.7	5.0	4.4	3.0	4.3	19
Tetrachloroethene	0.2	0.2	0.2	0.2	0.2	0.1	0.2	16

	Percent Deviation from Spike Concentration 1	2	3	4	5	6
Vinyl Chloride	41	-6	5	1	-30	-18
Dichloromethane	3	-18	-8	-5	-41	-23
Chloroform	-8	-13	-8	-16	-37	-18
Methylchloroform	21	-4	4	-11	-25	-4
1,2-Dichloroethane		-29	-21	-35	-43	-28
Benzene	-6	-29	-13	-19	-45	-29
Carbon Tetrachloride	-3	-14	-6	-14	-39	-19
Trichloroethene						
Toluene	70	12	52	33	-9	30
Tetrachloroethene	0	-25	-5	-10	-40	-20

Appendix C

FIELD SAMPLE DOCUMENTATION

-843

3-1

LANDFILL GAS SAMPLE COLLECTION DATA SHEET

			Start	1	2	3	4	5	6	7	8	9	10
						Minutes							
Initial Flow Rate	1 lpm	Canister Pressure	28" Hg	21" Hg	10" Hg	0	3.5 psig	6 psig	7.5 psig				
Final Flow Rate	1 lpm	Vacuum Rate	0	0	0	0	0	0	0				

Start Time	2212	Field Gas Chromatography Results	N/A
Evacuation Time	—		
Sample Time	2217	Remarks	CAN No. AV069
Final Canister Pressure	7.5 psig.		

Canister I.D. No. AV069 Initial Canister Pressure 28" Hg

Decon. ambient air fill ND on FID then 10 mins zero air

Sample I.D. Number MR-LG-00-02

Operator Signature [signature]

Operator Printed Name Allan Campbell

Date 5/15/90

Landfill Name Magazine Road

Comments

843

LANDFILL GAS SAMPLE COLLECTION DATA SHEET

			Start	1	2	3	4	5	6	7	8	9	10
Initial Flow Rate	1.2 lpm	Canister Pressure	28" Hg	12" Hg	6" Hg	2 psig	5.5 psig	7.5 psig					
Final Flow Rate	1.2 lpm	Vacuum Rate	0	0	0	0	0	0					

Start Time	1928
Evacuation Time	45 second
Sample Time	1933
Final Canister Pressure	7.5 psig

Field Gas Chromatography Results: N/A

Remarks

CAN No. AV133

Canister I.D. No. AV133 Initial Canister Pressure 28" Hg

Decon. 10 min AMB, 10 min ZERO, FID = ND

Sample I.D. Number MR-LG-01-02

Operator Signature D. Van Dusen

Operator Printed Name D. VAN DUSEN

Date 5-18-90

Landfill Name MAG. RD

Comments

97-843

LANDFILL GAS SAMPLE COLLECTION DATA SHEET

			Minutes										
			Start	1	2	3	4	5	6	7	8	9	10
Initial Flow Rate	1 Lpm	Canister Pressure	29	22	14	6	1	4.5	7.5				
Final Flow Rate	1 Lpm	Vacuum Rate	0	0	0	0	0	0	0				

Start Time	7:45	Field Gas Chromatography Results: N/A
Evacuation Time	45 secs.	
Sample Time	5 min 50 sec.	Remarks
Final Canister Pressure	7.5	

Canister I.D. No. AV 127 Initial Canister Pressure _____

Decon. 10 min Amb. (ND=F10) 10 min zero

Sample I.D. Number MR-LG-R1-02

Operator Signature N. Contrerras / AGC

Operator Printed Name N. Contreras / AGC

Date 6-21-90

Landfill Name ~~[illegible]~~ MAGAZINE Road

Comments _____ CAN No. _____

843

LANDFILL GAS SAMPLE COLLECTION DATA SHEET

			Start	1	2	3	4	5	6	7	8	9	10
				Minutes									
Initial Flow Rate	1L/Pm	Canister Pressure	29 Hg	21.5 Hg ~~25~~	12 Hg	3.5 Hg	1.5 psig	5 psig	7.5				
Final Flow Rate	1 L/Pm	Vacuum Rate	Ø	Ø	Ø	Ø	Ø	Ø	Ø				

Start Time	1838/45 sec.	Field Gas Chromatography Results: N/A
Evacuation Time	45 sec.	
Sample Time	NC ~~[illegible]~~ 6 min.	Remarks
Final Canister Pressure	7.5	

Canister I.D. No. AV TA 098 Initial Canister Pressure

Decon. 10 min. Ambient 10 zero air

Sample I.D. Number MR-LG-02-02

Operator Signature Nick C Contreras

Operator Printed Name Nick C Contreras

Date 5-22-90

Landfill Name MAGAZINE ROAD

Comments

87-843

LANDFILL GAS SAMPLE COLLECTION DATA SHEET

			Minutes										
			Start	1	2	3	4	5	6	7	8	9	10
Initial Flow Rate	14pm	Canister Pressure	29	22	14	5	2	5	7.5				
Final Flow Rate	14pm	Vacuum Rate	0	0	0	0	0	0	0				

Start Time	0700	Field Gas Chromatography Results	N/A
Evacuation Time	45		
Sample Time	min 5:40 SECS	Remarks	
Final Canister Pressure	7.5		

Canister I.D. No. AV024 Initial Canister Pressure 29" Hg

Decon. 2 hr Ambient (ND=FID) 10 min zero

Sample I.D. Number MR-LG-R2-02

Operator Signature M. [illegible] / ACC

Operator Printed Name N. Contreras / ACC

Date 6-22-90

Landfill Name MAGAZINE Road

Comments CAN No. AV024

LANDFILL GAS SAMPLE COLLECTION DATA SHEET

			Start	1	2	3	4	5	6	7	8	9	10
			Minutes										
Initial Flow Rate	11 pm	Canister Pressure	28" Hg	21" Hg	14" Hg	5" Hg	1 psig	4.5 psig					
Final Flow Rate		Vacuum Rate	0	0	0	0	0	0					

Start Time	2005
Evacuation Time	45 second
Sample Time	AV09 2011
Final Canister Pressure	7.5 psig

Field Gas Chromatography Results: N/A

Remarks

CAN No. AV09

Canister I.D. No. AV091 Initial Canister Pressure 28" Hg

Decon. purge on ambient till ND on FID then 10 mins zero air

Sample I.D. Number MR-LG-03-02

Operator Signature [signature]

Operator Printed Name Allan Campbell

Date 5/15/90

Landfill Name Magazine Road.

Comments

LANDFILL GAS SAMPLE COLLECTION DATA SHEET

			Minutes										
			Start	1	2	3	4	5	6	7	8	9	10
Initial Flow Rate	1 lpm	Canister Pressure	28" Hg	21" Hg	15" Hg	7" Hg	1" Hg	4.5 psig	7.5 psig				
Final Flow Rate	1 lpm	Vacuum Rate	0	0	0	0	0	0	0				

Start Time	1835	Field Gas Chromatography Results	N/A
Evacuation Time	45 seconds		
Sample Time	1841	Remarks	
Final Canister Pressure	7.5 psig	CAN No.	AV024

Canister I.D. No. AV 024 Initial Canister Pressure 28" Hg

Decon. purged on ambient till FID ND then 10 mins zero air

Sample I.D. Number MR-LG-04-02

Operator Signature [signature]

Operator Printed Name Allan Campbell

Date 5/15/90

Landfill Name Magazine Road

Comments

-843

LANDFILL GAS SAMPLE COLLECTION DATA SHEET

			Start	1	2	3	4	5	6	7	8	9	10
			Minutes										
Initial Flow Rate	1 lpm	Canister Pressure	29" Hg	22" Hg	15" Hg	6" Hg	1 psig	4.5 psig	7.5 psig				
Final Flow Rate	1 lpm	Vacuum Rate	0	0	0	0	0	0	0				

Start Time	1529	Field Gas Chromatography Results: NA
Evacuation Time	45 seconds	
Sample Time	1735	Remarks
Final Canister Pressure	7.5 psig	CAN No. AU089

Canister I.D. No. AU089 Initial Canister Pressure 29" Hg

Decon. purge on ambient till ND on FID

Sample I.D. Number MR-LG-05-02

Operator Signature [signature]

Operator Printed Name Allan Campbell

Date 5/15/90

Landfill Name Maggzine Road

Comments

LANDFILL GAS SAMPLE COLLECTION DATA SHEET

			Start	1	2	3	4	5	6	7	8	9	10
			Minutes										
Initial Flow Rate	1 L/min	Canister Pressure	28.5" Hg	19" Hg	8" Hg	Ø	4.5 PSI	7.5 PSI					
Final Flow Rate	1 L/min	Vacuum Rate	1	1	1	1	1	1					

Start Time	1655	Field Gas Chromatography Results	N/A
Evacuation Time	45 sec		
Sample Time	5 min, Ø sec	Remarks	
Final Canister Pressure	7½ PSI		

Canister I.D. No. ~~AV114~~ AV086 Initial Canister Pressure 28.5" Hg

Decon. 10 min AMB (FID=ND), 10 min ZERO AIR

Sample I.D. Number MR-MG-02-02

Operator Signature D. Van Dusen

Operator Printed Name D. VAN DUSEN

Date 5-22-90

Landfill Name MAG. RD

Comments

LANDFILL GAS SAMPLE COLLECTION DATA SHEET

			Start	1	2	3	4	5	6	7	8	9	10
			Minutes										
Initial Flow Rate	1 L/min	Canister Pressure	28 1/2" Hg	19" Hg	10" Hg	Ø	3 1/2 PSI	6 1/2 PSI					
Final Flow Rate		Vacuum Rate	Ø	Ø	Ø	Ø	Ø	Ø					

Start Time	1728	Field Gas Chromatography Results: N/A
Evacuation Time	45 sec	
Sample Time	5 min 30 sec	Remarks
Final Canister Pressure	7 1/2 PSI	

Canister I.D. No. AV 125 Initial Canister Pressure 28 1/2 " Hg

Decon. 15 min AMB, FID = ND, 10 min ZERO

Sample I.D. Number MR-MG-03-02

Operator Signature D. Van Dusen

Operator Printed Name D. VAN DUSEN

Date 5-22-90

Landfill Name MAG RD

Comments

3-4

INTEGRATED SURFACE SAMPLING COLLECTION DATA SHEET

DATE 5/18/90

SAMPLE TIME 2009

CANISTER IDENTIFICATION NO. Bag 85

LOCATION Magazine Road

INITIAL CANISTER PRESSURE — empty —

INITIAL FLOW RATE 300 cc/min

FINAL CANISTER PRESSURE — Full —

FINAL FLOW RATE 300 cc/min

MAX. WIND SPEED/DIRECTION SW 3.8 mph

APPROX. AVERAGE WIND SPEED/DIRECTION 2.5 mph SW

OPERATOR PRINTED NAME Allan Campbell

OPERATOR SIGNATURE Allan G Campbell

SAMPLE IDENT. NO. MR-IS-01-03

LANDFILL NAME Magazine Road

COMMENTS

87-846

-843

5-1

LANDFILL GAS SAMPLE COLLECTION DATA SHEET

			Start	1	2	3	4	5	6	7	8	9	10
			Minutes										
Initial Flow Rate	1 L/min	Canister Pressure	280" Hg	20" Hg	9" Hg	1" Hg	3 psi	5 1/2 psi					
Final Flow Rate	1 L/min	Vacuum Rate	Ø	Ø	Ø	Ø	Ø	Ø					

Start Time	1818	Field Gas Chromatography Results: N/A
Evacuation Time	45 sec	
Sample Time	5 1/2 min	Remarks: CAN No. AV049 MR-MG-01-02
Final Canister Pressure	7 1/2 PSI	

Canister I.D. No. AV049 Initial Canister Pressure 28" Hg

Decon. 10 min AMB, 10 min ZERO

Sample I.D. Number MR-MG-01-02

Operator Signature D. Van Dusen

Operator Printed Name D. VAN DUSEN

Date 5-18-90

Landfill Name MAG. RD

Comments

-843

LANDFILL GAS SAMPLE COLLECTION DATA SHEET

			Start	1	2	3	4	5	6	7	8	9	10
			Minutes										
Initial Flow Rate	1 L/min	Canister Pressure	28½" Hg	21" Hg	11" Hg	1" Hg	3½ PSI	6½ PSI					
Final Flow Rate	1 L/min	Vacuum Rate	Ø	Ø	Ø	Ø	Ø	Ø					

Start Time	[redacted] 1754	Field Gas Chromatography Results: N/A
Evacuation Time	45 sec	
Sample Time	5 min 20 sec	Remarks
Final Canister Pressure	7½ PSI	

Canister I.D. No. AV 105 Initial Canister Pressure 28½ PSI

Decon. 10 min AMB (FID=ND), 10 min ZERO

Sample I.D. Number MR-MG-04-02

Operator Signature D. Van Dusen

Operator Printed Name D. VAN DUSEN

Date 5-22-90

Landfill Name MAG RD

Comments

AMBIENT AIR SAMPLE COLLECTION DATA SHEET

	START	FINAL
FLOW RATE	(21) 3.3	(24) 3.9
SAMPLE TIME	1723	1600
CANSITER PRESSURE	30" Hg.	6 psig

DECON. 10 min. Ambient Air & 5 min. zero air.

EVACUATION TIME

SAMPLER NO. AV-09

SAMPLE IDENTIFICATION NO. MR-IA-01-09

TYPE OF SAMPLE 24hr. Ambient Air.

CANISTER IDENTIFICATION NUMBER AV029

DATE 5-16-90

OPERATOR PRINTED NAME Nick C. Contreras

OPERATOR SIGNATURE Nick C. Contreras

LANDFILL NAME MAGAZINE ROAD

COMMENTS Southwest site

87-845

AMBIENT AIR SAMPLE COLLECTION DATA SHEET

	START	FINAL
FLOW RATE	(19.5) ~~[illegible]~~ 3.0 lpm	(22) 3.5
SAMPLE TIME	1715	1610
CANSITER PRESSURE	29" Hg.	6. psig.

DECON. 10min. Ambient Air & 5 min zero air.

EVACUATION TIME

SAMPLER NO. AV 03

SAMPLE IDENTIFICATION NO. MR-IA-01-03

TYPE OF SAMPLE 24hr. Air Sample

CANISTER IDENTIFICATION NUMBER A003

DATE 5-16-90

OPERATOR PRINTED NAME Nick C. Contreras

OPERATOR SIGNATURE Nick C. Contreras

LANDFILL NAME MAGALINE ROAD

COMMENTS Northeast site

87-845

AMBIENT AIR SAMPLE COLLECTION DATA SHEET

	START	FINAL
FLOW RATE	(18.5) 2.8	(21.5) 3.4
SAMPLE TIME	1715	1610
CANSITER PRESSURE	29" Hg.	5.5 psig

DECON. 10 min. Ambient Air & 5 min zero air

EVACUATION TIME

SAMPLER NO. AV-04

SAMPLE IDENTIFICATION NO. ~~MR-[illegible]~~ NC MR-IA-C1-04

TYPE OF SAMPLE 24 hr. Ambient.

CANISTER IDENTIFICATION NUMBER A009

DATE 5-16-90

OPERATOR PRINTED NAME Nick Contreras Jr.

OPERATOR SIGNATURE [illegible]

LANDFILL NAME MAGAZINE ROAD

COMMENTS Northeast site

87-845

AMBIENT AIR SAMPLE COLLECTION DATA SHEET

	START	FINAL
FLOW RATE	(18) 2.7	(16) 2.3
SAMPLE TIME	1145	1735
CANSITER PRESSURE	30" Hg.	6.5 psig

DECON. 10 min Ambient Air & 5 min zero Air.

EVACUATION TIME

SAMPLER NO. AV-09

SAMPLE IDENTIFICATION NO. MR-IA-02-09

TYPE OF SAMPLE MR-IA-02-09

CANISTER IDENTIFICATION NUMBER A019

DATE 5-17-90

OPERATOR PRINTED NAME Nick Contreras Jr.

OPERATOR SIGNATURE [signature]

LANDFILL NAME MAGAZINE ROAD

COMMENTS Southwest

87-845

AMBIENT AIR SAMPLE COLLECTION DATA SHEET

	START	FINAL
FLOW RATE	(18) 2.7	(18) 2.7
SAMPLE TIME	1752	1755
CANSITER PRESSURE	29" Hg.	7.0

DECON. 10min Ambient Air & 5min zero air.

EVACUATION TIME

SAMPLER NO. ~~[illegible]~~ ~~A002~~ AV 03

SAMPLE IDENTIFICATION NO. MR-IA-02-03

TYPE OF SAMPLE 24hr. Ambient Air.

CANISTER IDENTIFICATION NUMBER A002

DATE 5-17-90

OPERATOR PRINTED NAME Nick Contreras

OPERATOR SIGNATURE [illegible]

LANDFILL NAME Magazine Road

COMMENTS Northwest

87-845

AMBIENT AIR SAMPLE COLLECTION DATA SHEET

	START	FINAL
FLOW RATE	(20) 3.1	(17) 2.5
SAMPLE TIME	1752	1755
CANSITER PRESSURE	30" Hg.	7.0 psig

DECON. 10 min Ambient & 5 min zero

EVACUATION TIME

SAMPLER NO. AV04

SAMPLE IDENTIFICATION NO. MR-IA-~~0~~C2-04

TYPE OF SAMPLE 24 hr. Ambient Air.

CANISTER IDENTIFICATION NUMBER A013

DATE 5-17-90

OPERATOR PRINTED NAME Nick Contreras

OPERATOR SIGNATURE Nick Contreras

LANDFILL NAME MAGAZINE ROAD

COMMENTS Northeast

87-845

AMBIENT AIR SAMPLE COLLECTION DATA SHEET

	START	FINAL
FLOW RATE	(18) 2.7	(18) 2.7
SAMPLE TIME	1840 5/17	1840 5/18
CANSITER PRESSURE	30" Hg	7.5 psig

DECON. 10 mins Ambient Air 5 mins Zero Air

EVACUATION TIME ~1 hr

SAMPLER NO. AV-Ø9

SAMPLE IDENTIFICATION NO. MR-IA-Ø3-Ø9

TYPE OF SAMPLE 24 hr Ambient Air

CANISTER IDENTIFICATION NUMBER AVØ36

DATE 5/18/90

OPERATOR PRINTED NAME Allan Campbell

OPERATOR SIGNATURE Allan G Campbell

LANDFILL NAME Magzine Road

COMMENTS

AN NO. AV036

87-845

AMBIENT AIR SAMPLE COLLECTION DATA SHEET

	START	FINAL
FLOW RATE	(18) 2.7	(17) 2.5
SAMPLE TIME	1845 5/17	1845 5/18
CANSITER PRESSURE	29" Hg	7.5 psig

DECON. 10 mins ambient 5 mins Zero air

EVACUATION TIME ~1 hr

SAMPLER NO. AV Ø3

SAMPLE IDENTIFICATION NO. MR-IA-Ø3-Ø3

(Recorded)
TYPE OF SAMPLE 24 hr ambient air

CANISTER IDENTIFICATION NUMBER AVØ83

DATE 5/18/90

OPERATOR PRINTED NAME Allan Campbell

OPERATOR SIGNATURE [signature]

LANDFILL NAME Magazine Road

COMMENTS

CAN No. AV083

87-845

AMBIENT AIR SAMPLE COLLECTION DATA SHEET

	START	FINAL
FLOW RATE	(17) 2.5	(18) 2.7
SAMPLE TIME	1845 5/17	1845 5/18
CANSITER PRESSURE	30" Hg	5.5 psig

DECON. 10 mins Ambient 5 mins zero air

EVACUATION TIME ~ 1 hr

SAMPLER NO. AV-Ø4

SAMPLE IDENTIFICATION NO. MR-IA-C3-Ø4

TYPE OF SAMPLE 24 hr ambient air collocated

CANISTER IDENTIFICATION NUMBER AVØ92

DATE 5/18/90

OPERATOR PRINTED NAME Allan Campbell

OPERATOR SIGNATURE [signature]

LANDFILL NAME Magazine Road

COMMENTS _____ CAN No. AVØ92

87-845

AMBIENT AIR SAMPLE COLLECTION DATA SHEET

	START	FINAL
FLOW RATE	(92) 17.1	(95) 17.7
SAMPLE TIME	0100	~~0400~~ 0500
CANSITER PRESSURE	28" Hg.	7.0 psig

DECON. 10 min Ambient Air & 5 min. zero

EVACUATION TIME

SAMPLER NO. AV 08

SAMPLE IDENTIFICATION NO. MR-IA-DI-08

TYPE OF SAMPLE 4hr. drainage sample.

CANISTER IDENTIFICATION NUMBER A005

DATE 5-16-90

OPERATOR PRINTED NAME Nick C. Contreras Jr.

OPERATOR SIGNATURE Nick C. Contreras Jr.

LANDFILL NAME MAGAZINE RD.

COMMENTS Northeast

87-845

AMBIENT AIR SAMPLE COLLECTION DATA SHEET

	START	FINAL
FLOW RATE	(90) 16.7	(95) 17.7
SAMPLE TIME	0100	~~0400~~ 0500 (DV)
CANSITER PRESSURE	30" Hg.	5 psig

DECON. 10 min Ambient Air & 5 min. zero Air

EVACUATION TIME

SAMPLER NO. AV01

SAMPLE IDENTIFICATION NO. MR-IA-DI-01

TYPE OF SAMPLE 4hr. drainage sample.

CANISTER IDENTIFICATION NUMBER AV-128

DATE 5-16-90

OPERATOR PRINTED NAME Nick Contreras

OPERATOR SIGNATURE Nick Contreras

LANDFILL NAME MAGAZINE Road

COMMENTS Swest site.

87-845

AMBIENT AIR SAMPLE COLLECTION DATA SHEET

	START	FINAL
FLOW RATE	(89) 16.5	(97) 18.1
SAMPLE TIME	0100	~~0400~~ 0500
CANSITER PRESSURE	29" Hg.	5 psig

DECON. 10 min Ambient Air & 5 min zero Air.

EVACUATION TIME

SAMPLER NO. AV08

SAMPLE IDENTIFICATION NO. MR-IA-D2-08

TYPE OF SAMPLE 4hr. drainage sample.

CANISTER IDENTIFICATION NUMBER AV097

DATE 5-17-90

OPERATOR PRINTED NAME Nick Contreras Jr.

OPERATOR SIGNATURE Nick C. Contreras

LANDFILL NAME MAGAZINE ROAD

COMMENTS Northeast.

87-845

AMBIENT AIR SAMPLE COLLECTION DATA SHEET

	START	FINAL
FLOW RATE	(89) 16.5	(97.5) 18.2
SAMPLE TIME	0100	~~0400~~ 0500
CANSITER PRESSURE	30" Hg.	6.0 psig

DECON. 10 min Ambient Air & 5 min zero Air.

EVACUATION TIME

SAMPLER NO. AV Ø1

SAMPLE IDENTIFICATION NO. MR-IA-D2-Ø1

TYPE OF SAMPLE 4hr. drainage sample.

CANISTER IDENTIFICATION NUMBER AV-129

DATE 5-17-90

OPERATOR PRINTED NAME Nick C. Contreras Jr.

OPERATOR SIGNATURE Nick C. Contreras Jr.

LANDFILL NAME MAGAZINE Road

COMMENTS Southwest site.

87-845

AMBIENT AIR SAMPLE COLLECTION DATA SHEET

	START	FINAL
FLOW RATE	(89) 16.5	(96) 17.9
SAMPLE TIME	0100	~~0400~~ 0500 (EV)
CANSITER PRESSURE	28" Hg.	7.0

DECON. 10 min Ambient Air & 5min zero

EVACUATION TIME

SAMPLER NO. AV 08

SAMPLE IDENTIFICATION NO. MR-IA-D3-08

TYPE OF SAMPLE 4hr. drainage.

CANISTER IDENTIFICATION NUMBER A016

DATE 5-18-90

OPERATOR PRINTED NAME Nick Contreras

OPERATOR SIGNATURE Nick Contreras

LANDFILL NAME MAGAZINE ROAD

COMMENTS Northeast

87-845

AMBIENT AIR SAMPLE COLLECTION DATA SHEET

	START	FINAL
FLOW RATE	(90) 16.7	(88) 16.3
SAMPLE TIME	0100	0400 0500
CANSITER PRESSURE	29" Hg.	4.5 psig.

DECON. 10 min Ambient Air & 5 min. zero Air.

EVACUATION TIME

SAMPLER NO. AV01

SAMPLE IDENTIFICATION NO. MR-IA-D3-01

TYPE OF SAMPLE 4hr drainage

CANISTER IDENTIFICATION NUMBER AV075

DATE 5-18-90

OPERATOR PRINTED NAME Nick Contrurds

OPERATOR SIGNATURE Nick Contrurds

LANDFILL NAME MAGAZINE RD

COMMENTS Southwest

87-845

FIELD LOGBOOK

TITLE MAGAZINE RD

Project No. 502333

Book No.

om Page No.

3-30-90

1315 D. Van Dusen on site to set up met. station. Setting up Campbell datalogger w/ RM Young wind sensors.

1400 Met station set up. Off site.

To Page No.

Witnessed & Understood by me,	Date	Invented by	Date
		Recorded by Van Dusen	

TITLE Magazine

Project No. 502338

Book No.

From Page No.

4-10-90

0935 On site to check met station

0945 Met working fine. Batt volt = 12.4 vdc. Collected current data to file MAG.RDI.DAT on disk.

off site.

1245 Back on site to check perimeter of fill to see if GPR is needed.

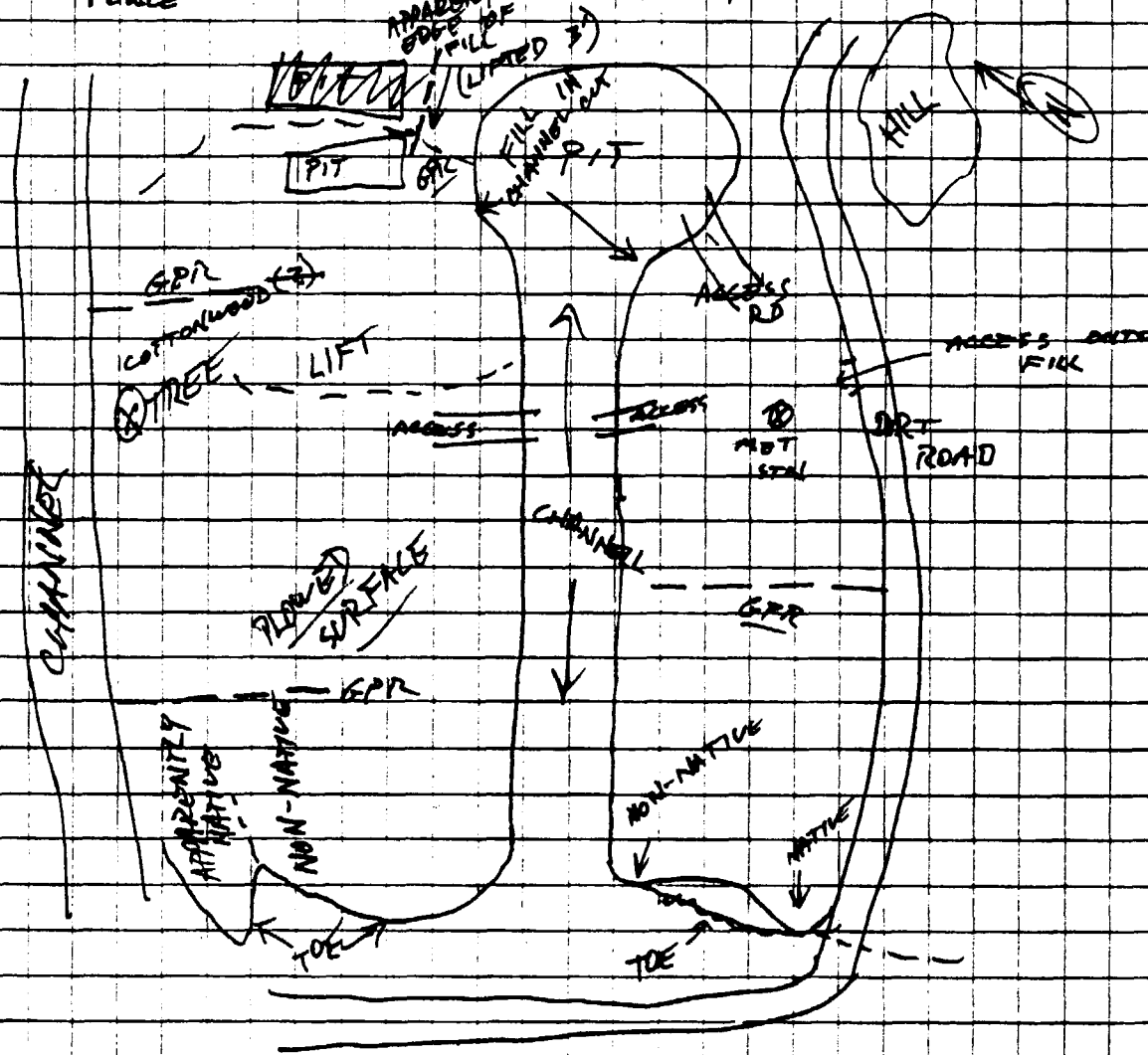

To Page No.

Witnessed & Understood by me, | Date | Invented by | Date

Recorded by

4-10-90 (p. 2)

1330. Very difficult to tell edges of fill. Suspect GPR lines on NW side, running NW/SE from man made channel toward natural channel (~500'). No GPR lines marked out.

1345 Off site.

1450 Campbell, Van Dam back on site.

1530 Laged out 4 GPR lines. Very difficult to distinguish fill boundaries.

Off site.

Witnessed & Understood by me,	Date	Invented by	Date
		Recorded by DV	

Project No._____
Book No._____ TITLE MAG RD GPR

From Page No.__

4-11-90 (DV)

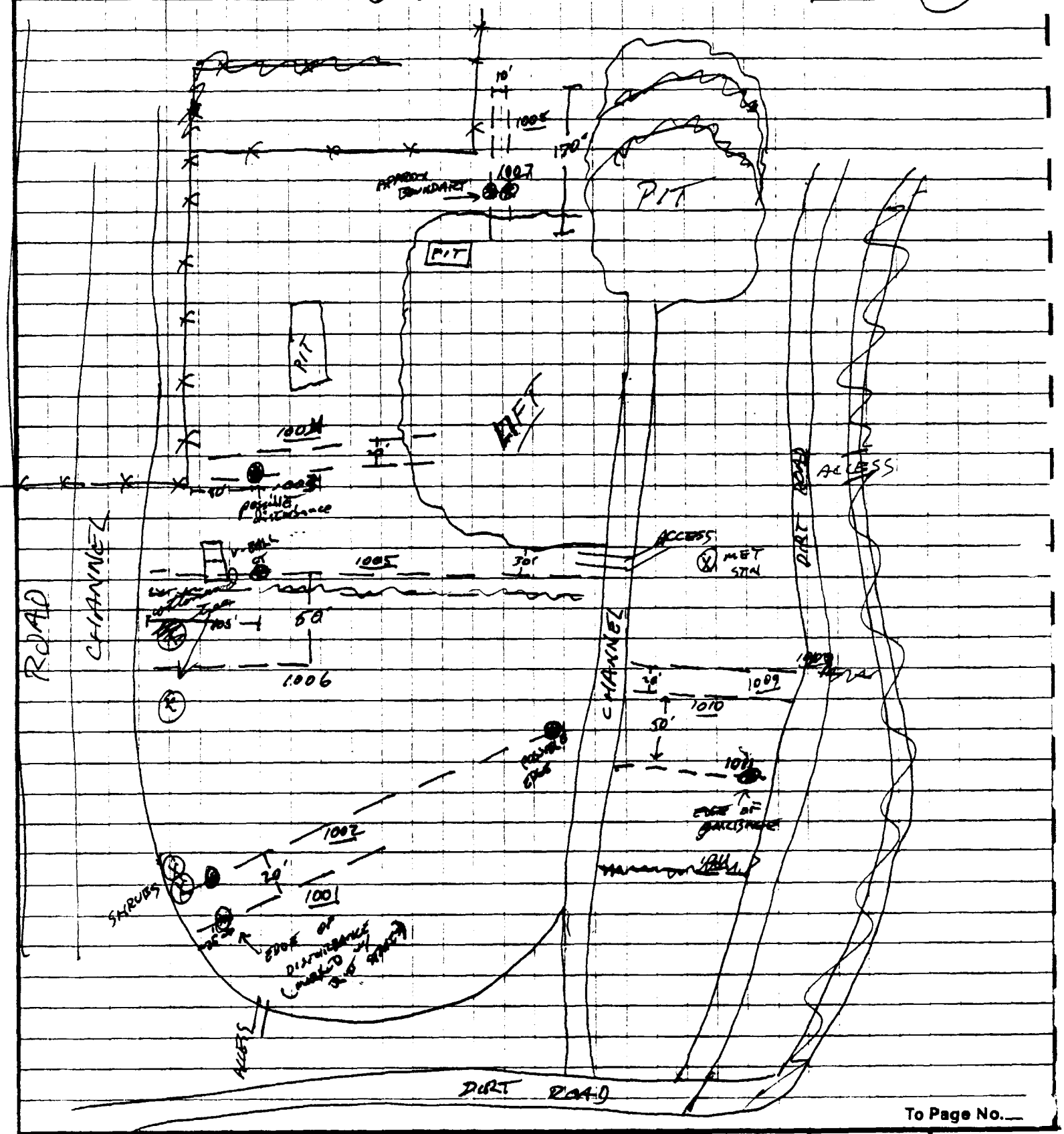

To Page No.__

Witnessed & Understood by me,	Date	Invented by	Date
		Recorded by	

TITLE Mag Rd - GPR

Project No. 50233A

Book No.

From Page No.

4-11-90

0700 Meet Ed, George, Ted of En-Tech at main gate MCASET. Obtain visitors pass for En-Tech

0715 On site Magazine Rd landfill.
Setting up GPR run 1001 and 1002

0800 Line 1001 completed. Possible disturbance ~20' SE of edge of plateau. Corresponds to slight depression on surface.

Setting up Line 1002

0815 Line 1002 finished. Same pattern on NW end of line (toward natural gulley). Will extend line 1002 to SE and run to interior channel to see if we can pick up native soil trace. Disturbance corresponds to fill shown on map in proposal.

0835 Completed extension of line 1002. Some pockets of disturbance. Looks like fill may be intermittent

Moving to Lines 1003 and 1004 opposite gate.

0915 Line ~~1003~~ 1004 (NW). Corner of fence to top of light. No apparent anomalies until on top of the light

0940 Finished line 1003. Nothing obvious, re-running NW-SE.

0945 Second run on 1003 showed possible disturbance on NW end.

Will run additional lines from N channel to just west of the fence next to interior channel

To Page No.

Witnessed & Understood by me,	Date	Invented by	Date
		Recorded by	

Page No.

4-11-90 (p. 2)

1015 Running line 1005 in two sections. First section completed. Several areas of possible disturbance. Northern boundary difficult to determine. Setting up for 2nd part 1005 (Southern half)

1040 Re-running 1005 SE→NW.

1100 1005 completed. Possible disturbance 105' SE from NW stake. Marking w/ blue stake.

1115 Van Dam off site for lunch run.
En-Tech setting up 1006 50' west of 1005. Trying to ID boundary of fill.

1145 Van Dam back on site. En-Tech finishing 1006. Possible disturbance ~100' from N end. Difficult to tell.

Breaking for lunch

1215 Setting up at 1007 on NE side

1240 1007 complete. Possible discontinuity ~20' from light boundary. Moving over 10' (away from fence) to run 1008

1245 1008 complete. Similar pattern to 1007.

1250 George ~~Martinez~~ Martinez on site. He is concerned with ability of other parties to use GPR data/maps to avoid repeating the work. Reassured him that our maps would be interpretable by other parties

1380 G. Martinez off site.

To Page No.

Witnessed & Understood by me,	Date	Invented by	Date
		Recorded by	

GPR

Project No.
Book No.

e No.

4-11-90 (p. 3)

315 Mapping out 1007 and 1008. Moving to 1009 on south side of field

1400 1009 Complete

1410 Begin 1010, 20' towards SW from 1009. No patterns appearing for 1009 or 1010. Fill may extend to road. Impossible to tell visually from the surface. Will move 50' SW and try one more time.

1415 1011 complete. Much more clean profile. Appears to be non-garbage fill next to road with garbage begining ~20-25' NW of road. Blue ribbon where garbage appears to begin.

Breaking down equipment, mapping out lines 1001-1006, 1009-1011.

1615 Off site.

To Page No.

ssed & Understood by me,	Date	Invented by	Date
		Recorded by	

E MET STN

Project No. 50233B

Book No.

Page No.

4-12-90

1345 Van Dam on site to collect met data/ break down station

1400 Collect file MAG_RD2.DAT. All data since station installed. Should supercede MAG_RD1.DAT

1430 Met station down, off site.

To Page No.

ssed & Understood by me,	Date	Invented by	Date
		Recorded by	

TITLE Magazine Road Landfill

Project No. 50233

Book No.

From Page No.

5/1/90

1400 AJC & DVD onsite

1500 got Van out of sand that Dave drove in to!

1540 Installed LG-1 to 8 ft (see map next page)

1600 LG-2 complete to 7'

1615 MG-1 installed to 6 ft

1630 AJC & DVD off site.

AJC

To Page No.

Witnessed & Understood by me,	Date	Invented by / Recorded by	Date 5/1/90

TITLE Magazine Road Landfill

Project No. 50233

Book No.

From Page No.

5/1/90

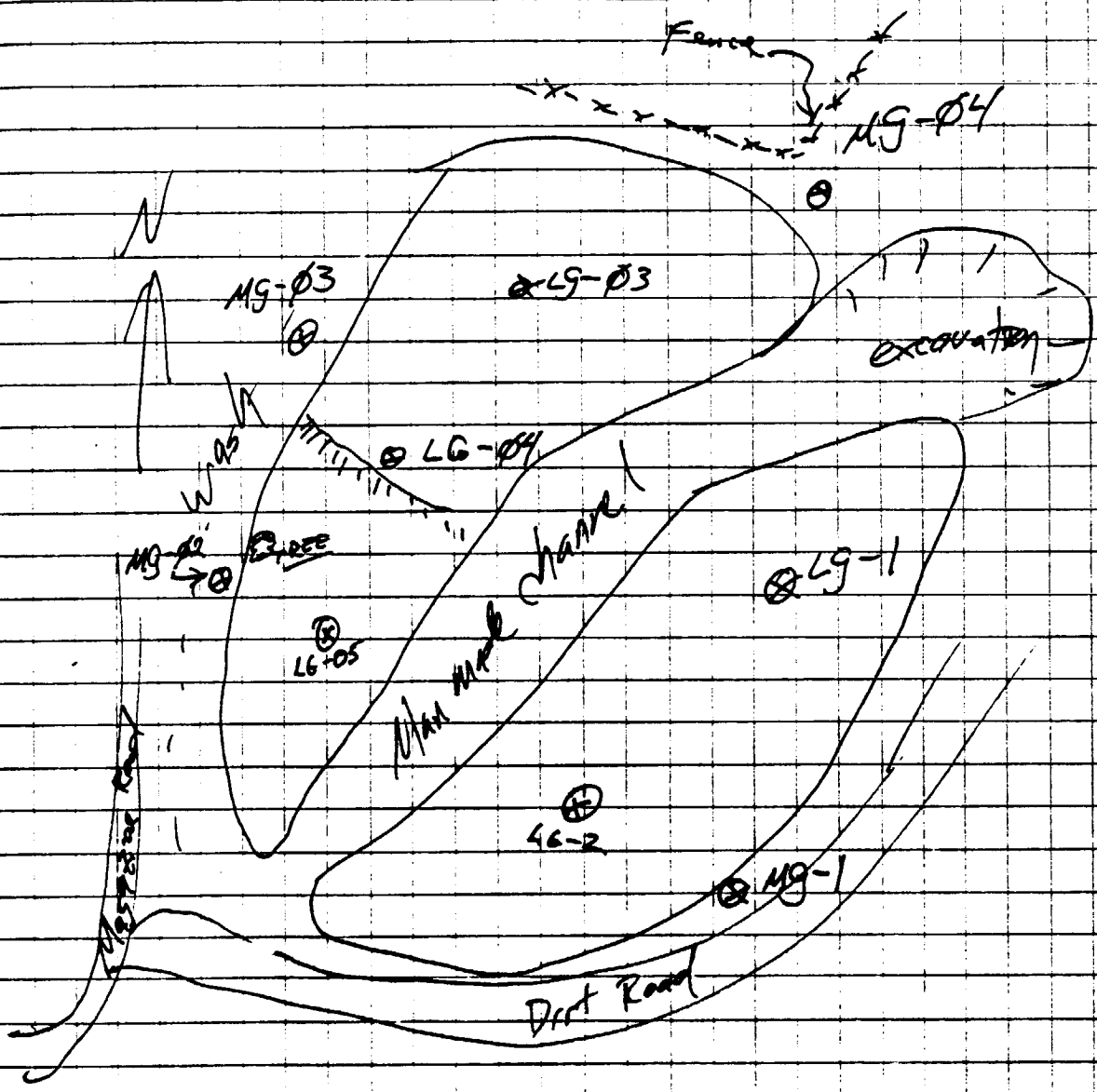

To Page No.

Witnessed & Understood by me,	Date	Invented by	Date
		Recorded by	5/1/90

Magazine Road Landfill

Project No. 50233
Book No.

m Page No.

5/2/90

1600 AGC & DVD on site @ LG-03 location. Preparing to install probe. See map on pg. ~~18~~ 17.

1630 LG-03 installed to 8'. NOTE: Found attempt. Previous attempts to 1', 1½', 3'. Destroyed those probes in place. Marked hole

1650 LG-04 installed to 8'

1705 LG-05 complete, 8'.

1715 MG-02 complete to 6'.

1730 MG-03 complete - 6' - Marine guard curious about our activities - no problem

1740 MG-04 installed to 6'. Near corner of fence.

1800 AGC & DVD off site

To Page No.

nessed & Understood by me,	Date	Invented by AGC / Recorded by	Date 5/2/90

TLE Magazine Road Project No. 50233 Book No. 21

om Page No.

5/15/90 AGC

1355 AGC & NC on site @ Magazine Road Landfill after getting ID for NC. Overcast, cool, light SW breeze ~ 4 mph

1420 Set up met station # 1018 and oriented to north.

1445 - Set up Northeast site consisting of AV08, AV03, AV04

sampler	can	flow	Volts.	
AV08	A005	105	12.4	adj to 95
AV03	A003	18	12.2	
AV04	A009	18	12.4	

1500 - All three samplers ~~decanted~~ purged with 10 min Ambient & 5 min zero air.

AV08 1500 - 1505 zero
AV03 1505 - 1515 zero
AV04 1515 - 1520 zero

1520 Checked flow on drainage sampler.

sampler	can	flow		
AV08	A005	85 to 95	Adj.	drainage sampler
AV03	A003	22 to 18	Adj.	24 hr Sampler
AV04	A009	15 to 18	Adj.	24 hr sampler collocated

1555 Purge AV01 & AV09

sampler	can		
AV01	AV128	- 10 min Ambient	5 min zero air
AV09	AV029	- 10 min Ambient	5 min zero air.

1625 On SW side setting up samplers

Sampler	Can	Flow	
AV-01	AV128	~~110 adjusted to 20~~ AGC	drainage sampler
AV-09	AV029	110 adjusted to 20	24 hr sampler

To Page No.

Witnessed & Understood by me, | Date | Inverted by | Date 5/15/90 AGC

Recorded by [signature]

TITLE Magazine Road

Project No. 50233

Book No.

From Page No.

5/15/90 Pg 2

1630 - Checking flow Northeast site;

Sampler	flow	can	
AV08	90	A005	Adj. from 85
AV03	20	A003	Adj from 40
AV04	20	A009	no adj.

1640 - Checked Southwest site samplers; AV01, AV09
Both checked out fine 90 and 20

1650 - Checked Northeast side site;

sampler	flow
AV08	90
AV03	20
AV04	20

1655 Purged Landfill Gas sampler till ND on FID then gave it 10 mins of zero air. Preparing to sample probe LG-05

1705 Preparing to start NE samplers.

Sampler	Can	Flow	Start Time		Init Press
AV08	A005	92	0100	5/16	28" Hg
AV03	A003	19.5	1715	5/15	29" Hg
AV04	A009	18.5	1715	5/15	29" Hg

1720 Preparing to start SW samplers

Sampler	Can	Flow	Start Time		Init Press
AV01	AV128	90	0100	5/16	30" Hg
AV09	AV029	21	1723	5/15	30" Hg

1730 At probe LG-05

CAN No. AV

1735 Collected sample MR-LG-05-02 in can AV059

1740 purging on ambient air output line 100 on FID.

To Page No.

Witnessed & Understood by me,	Date	Invented by / Recorded by	Date 5/15/90

TITLE Magazine Road

Project No. 50233

Book No.

From Page No. 5/15/90 pg 3

1800 OVA Reading on output line from FID is ~ 3ppm.

1820 OVA Reading same as ambient, purging for 10 mins on zero a

1830 Preparing to sample LG-Ø4

1841 Collected MR-LG-Ø4-Ø2, purging sampler on ambient air.

CAN No. AV024

1845 FID reading on output from sampler is ~ 500ppm. Purging on ambient air.

1910 FID Reading ~10 ppm. Continuing to purg on ambient air.

1930 Sample output ~ 2 ppm.

1945 Purging sampler for 10 mins on zero air.

2000 Preparing to sample LG-Ø3

2011 Collected MR-LG-Ø3-Ø2

CAN No. AV091

2015 Sampler output >1000ppm.

2030 AJC & NC off site for dinner.

To Page No

Witnessed & Understood by me,	Date	Invented by AJC	Date 5/15/90
		Recorded by AJC	

TITLE Magazine Road

Project No. 50233

Book No.

From Page No. 5/15/90 pg 4

ASC ~~0945~~ 2145 Allowed sampler to purge through dinner. Output currently ~ 0.4 ppm. Will allow to purge a while longer.

ASC ~~0955~~ 2155 Purging sampler on zero air for 10 minutes.

ASC ~~1005~~ 2205 Preparing to collect blank.

2217 Collected blank MR-LG-00-02

CAN No. AU069

2220 ASC & Mick close for night

To Page No.

Witnessed & Understood by me,	Date	Invented by ASC	Date 5/15/90
		Recorded by	

From Page No.

5-16-910

* 0945 - On Southwest side retrieving drainage sample;

sampler	CAN	End Psig	End Time	flow	Sample Id#
AV031*	AV128	5.0	0400	85	MR-IA-D1-03

(★) - Installed can # AV-129 to check flows. AV-129 will be drainage for

Checked press. on 24 hr. sampler;

sampler	CAN	press.
AV09	AV029	-2

* 1000 - On Northeast side. Checking Psig's and retrieving sampl.

sampler	can	End Psig	End time	flow	Sample Id.
AV08	A005	7.0	0400	95	MR-IA-D1-08

Psig check;

sampler	PSIG
AV03	0
AV04	-1

* 1600 - Check Southwest site;

sampler	CAN	PSIG End	End time	flow	Sample Id.
AV09	AV029	6.0	1600	24	MR-IA-01-09

Check 4 hr drainage flow

sampler	can	flow
AV01	AV129	90

1610 - Check flow & press. Northeast site;

sampler	can	Press. End	End time	flow	Sample Id#
AV03	A003	6.0	1610	22	MR-IA-01-03
AV04	A009	5.5	1610	21.5	MR-IA-01-04

1620 - Checked flow of 4 hr. drainage.

sampler	flow	can
AV08	90	AV097

(cont. on pg. 33)

To Page No.

Witnessed & Understood by me,	Date	Invented by	Date
		Recorded by	

Page No.__ WS WD 5-15-90 (wind speed wind direction)

1500	6.	WSW
1600	7.	WSW
1700	6.	WSW
1800	6.	WSW
1900	3.5	W
2000	1.5	WSW
2100	2.	NE
2200	3.	NE
2300	3.	NE

5-16-90 (wind speed) (wind Direction)

0000	4.0	NNE
0100	2.5	NNE
0200	2.5	NNE
0300	2.5	NE
0400	3.0	NE
0500	3.0	NE
0600	2.5	NE
0700	2.0	NE
0800	2.5	SW
0900	3.0	NW
1000	5.0	NNW
1100	6.0	NW
1200	6.0	NW
1300	10.0	NW
1400	10.0	WSW
1500	10.0	WSW
1600	8.0	WSW
1700	3.0	WNW
1800	5.0	WNW
1900	3.5	WNW
2000	2.0	NW
2100	2.0	W very calm
2200	2.0	ENE
2300	1.5	ENE

Witnessed & Understood by me,	Date	Invented by	Date
		Recorded by	

Project No._____
Book No._____ TITLE _____

From Page No.__

5-17-90

1000 - WIND speed wind direction

Time	WS	WD
0000	3	ENE
0100	2.5	ENE
0200	2.0	ESE
0300	3.0	ENE
0400	2.5	NE
0500	2.0	ENE
0600	4.0	ENE
0700	2.5	SSE
0800	4.0	SE
0900	3.0	SE
1000	5.0	SW
1100	5.5	SW
1200	7.0	SW
1300	8.0	WSW
1400	8.0	WSW
1500	9.0	WSW
1600	6.0	SW
1700	6.5	SW
1800	7.0	WSW
1900	6.0	WSW
2000	4.0	SW
2100	4.0	SW
2200	3.5	SW
2300	2.5	SW

To Page No.__

Witnessed & Understood by me,	Date	Invented by	Date
		Recorded by	

TITLE El Toro Air Sweep — MAGAZINE ROAD

Project No. 50233c

Book No.

From Page No.

5-16-90

1640 - Back on Southwest site to recheck flows

Sampler	flow	can
AV01	89 ~~[illegible]~~	AV129
AV09	20	A019

1700 - Back on Northeast site to check flows;

Sampler	flow	can	
AV03	18	A002	
AV04	18	A013	
AV08	92	097	adj. ~~[illegible]~~ DC 90

1720 Back on Southwest site;

Sampler	can	flow	
AV01	AV129	90	
AV09	A019	21	Adj. from 15.

1730 Back on NORTHEAST;

Sampler	CAN	flow	
AV03	A002	18	Adj. from 22
AV04	A013	18	Adj. from 24
AV08	AV097	90	

* 1745 Back SWest site flow check;

Sampler	CAN	flow	START Time	Press.
AV09	A019	18	1745	30"Hg.

Checked 4hr drainage;

*	Sampler	can	START PSIG	Time	flow
	AV 01	AV-129	30"Hg.	0100	89

To Page No.

Witnessed & Understood by me,	Date	Invented by	Date
		Recorded by NC	

From Page No. ___

*1752 — Set up samplers on Northeast to go.

Sampler	CAN	flow	START PSIG	Time
AV04	A013	20	30	1752
AV03	A002	18	29	1752
AV08	AV097	89	29	0100

1820 - Left site.

5-17-90

*0910 - Arrived at Northeast side to pickup drainage samples;

Sampler	can	flow	END PSIG	END TIME	Sample Id#
AV08	AV097	97	5 psig	0400	MR-IA-D2-08

Checked psig on 24 hr. samplers;

sampler	can	Psig
AV03	A002	0
AV04	A013	0

Started drainage sampler decon. 10 min. Ambient - 5 min. zero.

*0930 - On Southwest site to pickup drainage sample; also started decon;

sampler	can	flow	End PSIG	END TIME	Sample Id#
AV01	AV129	97.5	6.0	0400	MR-IA-D2-01

Checked 24 hr. sampler Psig;

sampler	can	Psig
AV09	A019	1

0940 - Checked wind data and logged it.
called Allan and discussed wind and samples.

5-17-90

1600 - At Northeast site;

sampler	can	flow	Psig
AV03 →	A002	Ø	6 psig
AV04 →	A013	Ø	6 psig

(cont. pg. 37)

To Page No. ___

TITLE FITOBO AIRSWAT (MAGAZINE ROAD) Project No. 50233c Book No. 37

Page No. 5-17-90

1610 - flow check of 4hr. drainage sampler; ON NORTHEAST

sampler	can	flow	Psig
AV08	A016	90	Ø

*1620 - On Southwest site; 24hr sampler at 7.0psig; I will remove at 7.5

sampler	can	flow	psig END	END TIME	sample Id**
AV09	A019	Ø	7.5NC	Ø	MR-IA-02-09

1627 Checked 4hr. drainage flow;

sampler	can	flow	psig
AV01	AV075	90	Ø

~~NG Started Ambient air decon of sampler AV09. Will return to zero sampler after removal of NORTHEAST samples.~~

1645 - Sampler AV09 seems to be taking awhile to fill. I will check NORTHEAST SITE.

1650 - NORTHEAST SITE. 4hr. drainage decon complete and flow looks good.

sampler	can	flow
AV08	A016	B9

1655 - Northeast

sampler	can	~~flow~~ Psig	~~psig~~
AV03	A002	6.5	
AV04	A013	6.5	

1700 Check met.

1720 - Checking Northeast again samplers at;

sampler	can	Psig
AV03	A002	7.0
AV04	A013	6.5 almost 7.0

NE Checking 4hr. sampler flow.

SAMP: AV08 CAN: A016 flow: B9 START TIME: 0100 START PSIG: 28"Hg

To Page No.

Witnessed & Understood by me,	Date	Invented by	Date
		Recorded by	

MAGAZINE ROAD

Project No. 50233c

Book No.

Page No.

5-17-90

1735 - On Southwest site;

Sampler	can	flow	END PSIG	END TIME	Sample Id#
AV09	A019	16	~~7.5~~ 6.5	1735	ME-IA-02-09

1740 - SW

Sampler	CAN	flow	START PSIG	START TIME	Sample Id#
AV01	AV075	90	29" Hg.	0100	Ø

1740 - Actual reading on AV09 was 6.5 due to bad gauge. could have gone longer.

1740 - Ambient Air decon started on AVØ9 10 min.

1755 - Northeast site - Samplers ready.

Sampler	can	flow	END PSIG	END TIME	Sample Id#
AV03	A002	18	7.0	1755	ME-IA-02-03
AV04	A013	17	7.0	1755	ME-IA-02-04

1800 - Starting Ambient Air decon. 10min both samplers AV03 & AV04

1810 - zero air for AVØ3

1815 - zero air for AVØ4

1825 - Samplers testing for flow stability.

Sampler	CAN	flow
AV03	AV083	18
AV04	AV092	18

1835 - On Southwest site to zero 5 min. for decon.

1840 - Starting flow check

Sampler	can	flow
AV09	AV036	18

1840 - flow has been pretty steady I'm going to start up now.

Sampler	can	flow	Psig	Time
AV09	AV036	18	30" Hg.	1840

1845

sampler	can	flow	START PSIG	START TIME
AV03	AV083	18	29	1845
AV04	AV092	17	30	1846

To Page No.

Witnessed & Understood by me, | Date | Invented by | Date

Recorded by

TITLE MAGAZINE Road

Project No. 50233c

Book No.

From Page No.

5-18-90

* 0800 - On Southwest side removing drainage sample;

sampler	can	flow	end Psig	end time	sample Id*
AV01	AV075	188	4.5 psig	0400	MR-IA-D3-01

Checked 24 hr sampler;

sampler	can	psig
AV09	AV036	-2" Hg.

* 0820 - ON NORTHEAST side picking up drainage sample;

sampler	can	flow	end Psig	end time	sample Id**
AV08	A016	96	7.0	0400	MR-IA-D3-08

Checked 24 hr sampler press;

sampler	can	Psig
AV03	AV083	-1
AV04	AV042	-1

To Page No.

Witnessed & Understood by me, | Date | Invented by | Date

Project No.

TITLE Book No.

From Page No. 5-18-90

WIND DIRECTION WIND SPEED

	WS	WD
0000	2	SSW
0100	3	WSW
0200	2	WSW
0300	1.5	WSW/NE
0400	1.5	S
0500	2.0	S.NE
0600	2.0	NE
0700	2.0	NW/SE
0800	5.5	SSE
0900	6.0	S
1000	5.0	S
1100	4.5	S
1200	6.0	WSW
1300	7.5	W
1400	7.5	W
1500	7.5	WNW
1600	8.0	W
1700	7.0	WSW
1800		
1900		
2000		
2100		
2200		
2300		

1600 AGC + DVD onsite preparing to sample probe MG-1

1815 Setting up at MG-01. Sampler was [illegible] 10 min on AMB and 10 min on zero at 0900 this morning.

CAN No. AV-049 MR-MG-01-02

1825 MR-MG-01-02 collected, on AV-049 7½ To Page No.

Witnessed & Understood by me,	Date	Invented by	Date
		[illegible]	5/18/90

LE SAMPLING Project No. 50233 Book No. 4

Page No.

5-18-90 (p. 2)

1830 setting up LG-01

1835 At SW side samplers

Sampler	Canister	Flow	Final pressure	Stop Time	Sample #
AV-09	AV036	18	7.5 psig	1840	MR-IA-03-09

1845 On NE side

Sampler	Canister	Flow	Final pressure	Stop Time	Sample #
AV03	AV053	17	7.5 psig	1845	MR-IA-03-03
AV04	AV092	18	5.5 psig	1845	MR-IA-C3-04

1930 Finished purge of LFG sampler gave it 10 mins zero air. preparing to collect probe LG-01

1933 Collected MR-LG-01-02 CAN No. AV133

CAN No. AV133

1935 Preparing to collect TSS sample. Sampler AV-03 Bag # 85

Background Reading 0.5 ppm

Flow 300 Start time. 1944

Time	WS	FID	Time	WS	FID	Time	WS	FID
1	2.7	1 ppm	12	1.2	0.8	24	0.6	0.6
2	3.0	1 ppm	13	1.0	0.6	25	1.0	0.8
3	2.0	0.5	14	2.0	0.6			
4	~~0.8~~ 1.8	0.8	15	2.5	0.8			
5	3.1	1.8	16	3.8	0.6			
6	3.5	2.5	17	1.8	0.6			
7	3.6	1.0	18	2.5	0.8			
8	3.3	0.8	19	3.6	1.2			
9	1.4	1.2	20	1.0	1.0			
10	2.8	1.2	21	1.0	0.8			
11	1.4	1.0	22	1.4	0.6			
			23	1.0	0.8			

upwind background

Sample time 2000 AS
Final Flow 300 cc/m

To Page No.

Witnessed & Understood by me, | Date | Invented by | Date

Page No.

5-22-90

1620 N. Cortese, D. Van Dam on site to sample migration gas probes

Setting up at MG-02.

Deconing sampler w/ ambient air.
Calibrating OVA - zero = ambient, span = 50 ppm

1640 Sampler on zero air. FID = ND

1655 Begin sampling MG-02. Can # AV056

1700 MR-MG-02-02 complete. 7½ PSI
→ Can # AV119 not vacuumed - needs to be cleaned

Purging sampler on ambient

1715 Purge sampler EGRD air. FID = ND

1725 Begin collecting MG-03

1731 MR-MG-03-02 complete, 7½ PSI Can # AV125

FID = ND, purge 10 min ambient

1743 setting up at MG-04. Placing sampler on zero air

1753 Begin collecting MG-04

1800 MR-MG-04-02 complete, 7½ PSI, Can # AV005

1810 LG02 Deconing sampler 10 min Ambient. 10 min zero
1830 Hooked up line to well.
~~0945 45~~ STAR

To Page No.

essed & Understood by me, | Date | Invented by | Date

TITLE MAGAZINE Bad

Project No. 50233c

Book No.

Page No.

5.22.90

1830/45sec. - CAN BAD only 24 Hg." have to start again.

1838/45sec. Opening Psig - 29" Hg. AV 098

1844 - finished sample. 7.5 psig

1900 off site. ~2 D/D

To Page No.

Read & Understood by me, | Date | Invented by | Date

Appendix D

LABORATORY DATA REPORTS

ATTACHMENT A - REPORT SHEET

EPA Method TO-14 GC/MS Analysis

Client:	AeroVironment	Sample Date:	5-16-90
Site:	MR-IA-01-09	Date Anal:	5-19-90
Lab #:	00505	Analyst:	Vivian Smith
Can #:	29		

CAS Number	Compound	MDL ppbv	Concentration ppbv
75-01-4	Vinyl Chloride	2.00	not detected
75-09-2	Dichloromethane	1.00	4.8
67-66-3	Chloroform	0.80	not detected
71-55-6	1,1,1-Trichloroethane	0.50	1.6
107-06-2	1,2-Dichloroethane	0.20	not detected
71-43-2	Benzene	2.00	not detected
56-23-5	Carbon Tetrachloride	0.20	not detected
79-01-6	Trichloroethene	0.60	not detected
106-93-4	1,2-Dibromoethane	0.50	not detected
127-18-4	Tetrachloroethene	0.20	0.32

ATTACHMENT A - REPORT SHEET

EPA Method TO-14 GC/MS Analysis

Client:	AeroVironment	Sample Date:	5-16-90
Site:	MR-IA-01-03	Date Anal:	5-18-90
Lab #:	00503	Analyst:	Vivian Smith
Can #:	03		

CAS Number	Compound	MDL ppbv	Concentration ppbv
75-01-4	Vinyl Chloride	2.00	not detected
75-09-2	Dichloromethane	1.00	1.7
67-66-3	Chloroform	0.80	not detected
71-55-6	1,1,1-Trichloroethane	0.50	0.83
107-06-2	1,2-Dichloroethane	0.20	not detected
71-43-2	Benzene	2.00	not detected
56-23-5	Carbon Tetrachloride	0.20	not detected
79-01-6	Trichloroethene	0.60	not detected
106-93-4	1,2-Dibromoethane	0.50	not detected
127-18-4	Tetrachloroethene	0.20	0.34

ATTACHMENT A - REPORT SHEET

EPA Method TO-14 GC/MS Analysis

Client:	AeroVironment	Sample Date:	5-16-90
Site:	MR-IA-Cl-04	Date Anal:	5-18-90
Lab #:	00504	Analyst:	Vivian Smith
Can #:	09		

CAS Number	Compound	MDL ppbv	Concentration ppbv
75-01-4	Vinyl Chloride	2.00	not detected
75-09-2	Dichloromethane	1.00	3.8
67-66-3	Chloroform	0.80	not detected
71-55-6	1,1,1-Trichloroethane	0.50	2.2
107-06-2	1,2-Dichloroethane	0.20	not detected
71-43-2	Benzene	2.00	not detected
56-23-5	Carbon Tetrachloride	0.20	not detected
79-01-6	Trichloroethene	0.60	not detected
106-93-4	1,2-Dibromoethane	0.50	not detected
127-18-4	Tetrachloroethene	0.20	0.22

Environmental Analytical Service, Inc.

ATTACHMENT A - REPORT SHEET

EPA Method TO-14 GC/MS Analysis

Client:	AeroVironment	Sample Date:	5-17-90
Site:	MR-IA-02-09	Date Anal:	5-21-90
Lab #:	00512	Analyst:	Vivian Smith
Can #:	19		

CAS Number	Compound	MDL ppbv	Concentration ppbv
75-01-4	Vinyl Chloride	2.00	not detected
75-09-2	Dichloromethane	1.00	not detected
67-66-3	Chloroform	0.80	not detected
71-55-6	1,1,1-Trichloroethane	0.50	not detected
107-06-2	1,2-Dichloroethane	0.20	not detected
71-43-2	Benzene	2.00	not detected
56-23-5	Carbon Tetrachloride	0.20	not detected
79-01-6	Trichloroethene	0.60	not detected
106-93-4	1,2-Dibromoethane	0.50	not detected
127-18-4	Tetrachloroethene	0.20	not detected

170-C Granada San Luis Obispo, CA 93401 (805) 541-3666 FAX: (805) 541-4550

Environmental Analytical Service, Inc.

ATTACHMENT A - REPORT SHEET

5/17/90

EPA Method TO-14 GC/MS Analysis

Client: AeroVironment
Site: MR-IA-02-03
Lab #: 00509
Can #: 02

Sample Date: 5-18-90
Date Anal: 5-21-90
Analyst: Vivian Smith

CAS Number	Compound	MDL ppbv	Concentration ppbv
75-01-4	Vinyl Chloride	2.00	not detected
75-09-2	Dichloromethane	1.00	1.1
67-66-3	Chloroform	0.80	not detected
71-55-6	1,1,1-Trichloroethane	0.50	not detected
107-06-2	1,2-Dichloroethane	0.20	not detected
71-43-2	Benzene	2.00	not detected
56-23-5	Carbon Tetrachloride	0.20	not detected
79-01-6	Trichloroethene	0.60	not detected
106-93-4	1,2-Dibromoethane	0.50	not detected
127-18-4	Tetrachloroethene	0.20	not detected

170-C Granada San Luis Obispo, CA 93401 (805) 541-3666 FAX: (805) 541-4550

Environmental Analytical Service, Inc.

ATTACHMENT A - REPORT SHEET

EPA Method TO-14 GC/MS Analysis

Client:	AeroVironment	Sample Date:	5-17-90
Site:	MR-IA-C2-04	Date Anal:	5-21-90
Lab #:	00511	Analyst:	Vivian Smith
Can #:	13		

CAS Number	Compound	MDL ppbv	Concentration ppbv
75-01-4	Vinyl Chloride	2.00	not detected
75-09-2	Dichloromethane	1.00	not detected
67-66-3	Chloroform	0.80	not detected
71-55-6	1,1,1-Trichloroethane	0.50	not detected
107-06-2	1,2-Dichloroethane	0.20	not detected
71-43-2	Benzene	2.00	not detected
56-23-5	Carbon Tetrachloride	0.20	not detected
79-01-6	Trichloroethene	0.60	not detected
106-93-4	1,2-Dibromoethane	0.50	not detected
127-18-4	Tetrachloroethene	0.20	not detected

170-C Granada San Luis Obispo, CA 93401 (805) 541-3666 FAX: (805) 541-4550

ATTACHMENT A - REPORT SHEET

EPA Method TO-14 GC/MS Analysis

Client:	AeroVironment	Sample Date:	5-18-90
Site:	MR-IA-03-09	Date Anal:	5-21-90
Lab #:	00515	Analyst:	Vivian Smith
Can #:	36		

CAS Number	Compound	MDL ppbv	Concentration ppbv
75-01-4	Vinyl Chloride	2.00	not detected
75-09-2	Dichloromethane	1.00	not detected
67-66-3	Chloroform	0.80	not detected
71-55-6	1,1,1-Trichloroethane	0.50	not detected
107-06-2	1,2-Dichloroethane	0.20	not detected
71-43-2	Benzene	2.00	not detected
56-23-5	Carbon Tetrachloride	0.20	not detected
79-01-6	Trichloroethene	0.60	not detected
106-93-4	1,2-Dibromoethane	0.50	not detected
127-18-4	Tetrachloroethene	0.20	not detected

Environmental Analytical Service, Inc.

ATTACHMENT A - REPORT SHEET

EPA Method TO-14 GC/MS Analysis

Client:	AeroVironment	Sample Date:	5-18-90
Site:	MR-IA-03-03	Date Anal:	5-23-90
Lab #:	00517	Analyst:	Vivian Smith
Can #:	83		

CAS Number	Compound	MDL ppbv	Concentration ppbv
75-01-4	Vinyl Chloride	2.00	not detected
75-09-2	Dichloromethane	1.00	1.0
67-66-3	Chloroform	0.80	not detected
71-55-6	1,1,1-Trichloroethane	0.50	1.1
107-06-2	1,2-Dichloroethane	0.20	not detected
71-43-2	Benzene	2.00	not detected
56-23-5	Carbon Tetrachloride	0.20	not detected
79-01-6	Trichloroethene	0.60	not detected
106-93-4	1,2-Dibromoethane	0.50	not detected
127-18-4	Tetrachloroethene	0.20	0.39

170-C Granada San Luis Obispo, CA 93401 (805) 541-3666 FAX: (805) 541-4550

ATTACHMENT A - REPORT SHEET

EPA Method TO-14 GC/MS Analysis

Client:	AeroVironment	Sample Date:	5-18-90
Site:	MR-IA-C3-04	Date Anal:	5-21-90
Lab #:	00516	Analyst:	Vivian Smith
Can #:	92		

CAS Number	Compound	MDL ppbv	Concentration ppbv
75-01-4	Vinyl Chloride	2.00	not detected
75-09-2	Dichloromethane	1.00	not detected
67-66-3	Chloroform	0.80	not detected
71-55-6	1,1,1-Trichloroethane	0.50	not detected
107-06-2	1,2-Dichloroethane	0.20	not detected
71-43-2	Benzene	2.00	not detected
56-23-5	Carbon Tetrachloride	0.20	not detected
79-01-6	Trichloroethene	0.60	not detected
106-93-4	1,2-Dibromoethane	0.50	not detected
127-18-4	Tetrachloroethene	0.20	not detected

ATTACHMENT A - REPORT SHEET

EPA Method TO-14 GC/MS Analysis

Client:	AeroVironment	Sample Date:	5-16-90
Site:	MR-IA-D1-08	Date Anal:	5-18-90
Lab #:	00501	Analyst:	Vivian Smith
Can #:	05		

CAS Number	Compound	MDL ppbv	Concentration ppbv
75-01-4	Vinyl Chloride	2.00	not detected
75-09-2	Dichloromethane	1.00	1.3
67-66-3	Chloroform	0.80	not detected
71-55-6	1,1,1-Trichloroethane	0.50	0.50
107-06-2	1,2-Dichloroethane	0.20	not detected
71-43-2	Benzene	2.00	not detected
56-23-5	Carbon Tetrachloride	0.20	not detected
79-01-6	Trichloroethene	0.60	not detected
106-93-4	1,2-Dibromoethane	0.50	not detected
127-18-4	Tetrachloroethene	0.20	not detected

ATTACHMENT A - REPORT SHEET

EPA Method TO-14 GC/MS Analysis

Client:	AeroVironment	Sample Date:	5-16-90
Site:	MR-IA-D1-01	Date Anal:	5-19-90
Lab #:	00502	Analyst:	Vivian Smith
Can #:	128		

CAS Number	Compound	MDL ppbv	Concentration ppbv
75-01-4	Vinyl Chloride	2.00	not detected
75-09-2	Dichloromethane	1.00	1.5
67-66-3	Chloroform	0.80	not detected
71-55-6	1,1,1-Trichloroethane	0.50	0.87
107-06-2	1,2-Dichloroethane	0.20	not detected
71-43-2	Benzene	2.00	not detected
56-23-5	Carbon Tetrachloride	0.20	not detected
79-01-6	Trichloroethene	0.60	not detected
106-93-4	1,2-Dibromoethane	0.50	not detected
127-18-4	Tetrachloroethene	0.20	0.30

ATTACHMENT A - REPORT SHEET

EPA Method TO-14 GC/MS Analysis

O.K. tgc

Client:	AeroVironment	Sample Date:	5-17-90
Site:	MR-IA-D2-01	Date Anal:	5-18-90
Lab #:	00506	Analyst:	Vivian Smith
Can #:	129		

CAS Number	Compound	MDL ppbv	Concentration ppbv
75-01-4	Vinyl Chloride	2.00	not detected
75-09-2	Dichloromethane	1.00	1.4
67-66-3	Chloroform	0.80	not detected
71-55-6	1,1,1-Trichloroethane	0.50	2.5
107-06-2	1,2-Dichloroethane	0.20	not detected
71-43-2	Benzene	2.00	not detected
56-23-5	Carbon Tetrachloride	0.20	not detected
79-01-6	Trichloroethene	0.60	not detected
106-93-4	1,2-Dibromoethane	0.50	not detected
127-18-4	Tetrachloroethene	0.20	0.23

ATTACHMENT A - REPORT SHEET

EPA Method TO-14 GC/MS Analysis

Client:	AeroVironment	Sample Date:	5-17-90
Site:	MR-IA-D2-08	Date Anal:	5-19-90
Lab #:	00507	Analyst:	Vivian Smith
Can #:	97		

CAS Number	Compound	MDL ppbv	Concentration ppbv
75-01-4	Vinyl Chloride	2.00	not detected
75-09-2	Dichloromethane	1.00	1.9
67-66-3	Chloroform	0.80	not detected
71-55-6	1,1,1-Trichloroethane	0.50	1.5
107-06-2	1,2-Dichloroethane	0.20	not detected
71-43-2	Benzene	2.00	not detected
56-23-5	Carbon Tetrachloride	0.20	not detected
79-01-6	Trichloroethene	0.60	not detected
106-93-4	1,2-Dibromoethane	0.50	not detected
127-18-4	Tetrachloroethene	0.20	0.53

Environmental Analytical Service, Inc.

ATTACHMENT A - REPORT SHEET

EPA Method TO-14 GC/MS Analysis

5/18/90

Client: AeroVironment
Site: MR-IA-D3-01
Lab #: 00513
Can #: 75

Sample Date: 5-17-90
Date Anal: 5-21-90
Analyst: Vivian Smith

CAS Number	Compound	MDL ppbv	Concentration ppbv
75-01-4	Vinyl Chloride	2.00	not detected
75-09-2	Dichloromethane	1.00	not detected
67-66-3	Chloroform	0.80	not detected
71-55-6	1,1,1-Trichloroethane	0.50	not detected
107-06-2	1,2-Dichloroethane	0.20	not detected
71-43-2	Benzene	2.00	not detected
56-23-5	Carbon Tetrachloride	0.20	not detected
79-01-6	Trichloroethene	0.60	not detected
106-93-4	1,2-Dibromoethane	0.50	not detected
127-18-4	Tetrachloroethene	0.20	not detected

170-C Granada San Luis Obispo, CA 93401 (805) 541-3666 FAX: (805) 541-4550

ATTACHMENT A - REPORT SHEET

EPA Method TO-14 GC/MS Analysis

Client:	AeroVironment	Sample Date:	5-18-90
Site:	MR-IA-D3-08	Date Anal:	5-21-90
Lab #:	00510	Analyst:	Vivian Smith
Can #:	16		

CAS Number	Compound	MDL ppbv	Concentration ppbv
75-01-4	Vinyl Chloride	2.00	not detected
75-09-2	Dichloromethane	1.00	not detected
67-66-3	Chloroform	0.80	not detected
71-55-6	1,1,1-Trichloroethane	0.50	not detected
107-06-2	1,2-Dichloroethane	0.20	not detected
71-43-2	Benzene	2.00	not detected
56-23-5	Carbon Tetrachloride	0.20	not detected
79-01-6	Trichloroethene	0.60	not detected
106-93-4	1,2-Dibromoethane	0.50	not detected
127-18-4	Tetrachloroethene	0.20	not detected

Total Organic Compound

Client:	AeroVironment	Ref#:	MR-IS-01-03
Analyst:	Vivian Longacre	Lab #:	00514
		Bag #:	85
		Date Sampled:	5-18-90
		Date Analyzed:	5-21-90

Methane ppmv	Non-Methane ppmv	Total Organic Carbon ppmv
1.8	1.1	2.9

ATTACHMENT A - REPORT SHEET

EPA Method TO-14 GC/MS Analysis

Client:	AeroVironment	Sample Date:	5-18-90
Site:	MR-LG-01-02	Date Anal:	5-24-90
Lab #:	00518	Analyst:	Vivian Smith
Can #:	133		

CAS Number	Compound	MDL ppbv	Concentration ppbv
75-01-4	Vinyl Chloride	500	not detected
75-09-2	Dichloromethane	60	not detected
67-66-3	Chloroform	2	not detected
71-55-6	1,1,1-Trichloroethane	10	not detected
107-06-2	1,2-Dichloroethane	20	not detected
71-43-2	Benzene	5	220
56-23-5	Carbon Tetrachloride	500	not detected
79-01-6	Trichloroethene	10	98
106-93-4	1,2-Dibromoethane	1	not detected
127-18-4	Tetrachloroethene	10	36

FIXED GAS ANALYSIS

Permanent Gases By GC/TCD

Component	Sample Concentration Percent by Volume
Hydrogen	0.00
Oxygen	0.22
Nitrogen	9.44
Methane	44.97
Carbon Monoxide	0.00
Carbon Dioxide	not analyzed
Total	54.6

ATTACHMENT A - REPORT SHEET

EPA Method TO-14 GC/MS Analysis

Client: AeroVironment
Site: MR-LG-R1-02
Lab #: 00733
Can #: 127

Sample Date: 6-22-90
Date Anal: 6-25-90
Analyst: Vivian Longacre

CAS Number	Compound	MDL ppbv	Concentration ppbv
75-01-4	Vinyl Chloride	500	not detected
75-09-2	Dichloromethane	60	330
67-66-3	Chloroform	2	not detected
71-55-6	1,1,1-Trichloroethane	10	not detected
107-06-2	1,2-Dichloroethane	20	not detected
71-43-2	Benzene	5	330
56-23-5	Carbon Tetrachloride	500	not detected
79-01-6	Trichloroethene	10	150
106-93-4	1,2-Dibromoethane	1	not detected
127-18-4	Tetrachloroethene	10	79

FIXED GAS ANALYSIS

Permanent Gases By GC/TCD

Component	Sample Concentration Percent by Volume
Hydrogen	0.00
Oxygen	0.26
Nitrogen	14.07
Methane	43.22
Carbon Monoxide	0.00
Carbon Dioxide	35.40
Total	93.0

ATTACHMENT A - REPORT SHEET

EPA Method TO-14 GC/MS Analysis

Client:	AeroVironment	Sample Date:	5-22-90
Site:	MR-LG-02-02	Date Anal:	5-26-90
Lab #:	00547	Analyst:	Vivian Smith
Can #:	98		

CAS Number	Compound	MDL ppbv	Concentration ppbv
75-01-4	Vinyl Chloride	500	not detected
75-09-2	Dichloromethane	60	not detected
67-66-3	Chloroform	2	not detected
71-55-6	1,1,1-Trichloroethane	10	not detected
107-06-2	1,2-Dichloroethane	20	not detected
71-43-2	Benzene	5	170
56-23-5	Carbon Tetrachloride	500	not detected
79-01-6	Trichloroethene	10	11
106-93-4	1,2-Dibromoethane	1	not detected
127-18-4	Tetrachloroethene	10	not detected

FIXED GAS ANALYSIS

Permanent Gases By GC/TCD

Component	Sample Concentration Percent by Volume
Hydrogen	0.00
Oxygen	0.36
Nitrogen	21.07
Methane	36.15
Carbon Monoxide	0.00
Carbon Dioxide	0.00
Total	57.6

Total Organic Carbon (TOC) ppmv

ATTACHMENT A - REPORT SHEET

EPA Method TO-14 GC/MS Analysis

Client:	AeroVironment	Sample Date:	6-22-90
Site:	MR-LG-R2-02	Date Anal:	6-25-90
Lab #:	00734	Analyst:	Vivian Longacre
Can #:	24		

CAS Number	Compound	MDL ppbv	Concentration ppbv
75-01-4	Vinyl Chloride	500	not detected
75-09-2	Dichloromethane	60	230
67-66-3	Chloroform	2	not detected
71-55-6	1,1,1-Trichloroethane	10	not detected
107-06-2	1,2-Dichloroethane	20	not detected
71-43-2	Benzene	5	190
56-23-5	Carbon Tetrachloride	500	not detected
79-01-6	Trichloroethene	10	not detected
106-93-4	1,2-Dibromoethane	1	not detected
127-18-4	Tetrachloroethene	10	not detected

FIXED GAS ANALYSIS

Permanent Gases By GC/TCD

Component	Sample Concentration Percent by Volume
Hydrogen	0.00
Oxygen	0.56
Nitrogen	24.25
Methane	36.73
Carbon Monoxide	0.00
Carbon Dioxide	33.37
Total	94.9

ATTACHMENT A - REPORT SHEET

EPA Method TO-14 GC/MS Analysis

Client:	AeroVironment	Sample Date:	5-15-90
Site:	MR-LG-03-02	Date Anal:	5-19-90
Lab #:	00499	Analyst:	Vivian Smith
Can #:	91		

CAS Number	Compound	MDL ppbv	Concentration ppbv
75-01-4	Vinyl Chloride	500	not detected
75-09-2	Dichloromethane	60	not detected
67-66-3	Chloroform	2	not detected
71-55-6	1,1,1-Trichloroethane	10	not detected
107-06-2	1,2-Dichloroethane	20	not detected
71-43-2	Benzene	5	82
56-23-5	Carbon Tetrachloride	500	not detected
79-01-6	Trichloroethene	10	not detected
106-93-4	1,2-Dibromoethane	1	not detected
127-18-4	Tetrachloroethene	10	not detected

FIXED GAS ANALYSIS

Permanent Gases By GC/TCD

Component	Sample Concentration Percent by Volume
Hydrogen	0.00
Oxygen	4.30
Nitrogen	19.50
Methane	39.62
Carbon Monoxide	0.00
Carbon Dioxide	32.09
Total	95.5

ATTACHMENT A - REPORT SHEET

EPA Method TO-14 GC/MS Analysis

Client: AeroVironment
Site: MR-LG-04-02
Lab #: 00498
Can #: 24

Sample Date: 5-15-90
Date Anal: 5-19-90
Analyst: Vivian Smith

CAS Number	Compound	MDL ppbv	Concentration ppbv
75-01-4	Vinyl Chloride	500	not detected
75-09-2	Dichloromethane	60	460
67-66-3	Chloroform	2	21
71-55-6	1,1,1-Trichloroethane	10	not detected
107-06-2	1,2-Dichloroethane	20	not detected
71-43-2	Benzene	5	200
56-23-5	Carbon Tetrachloride	500	not detected
79-01-6	Trichloroethene	10	78
106-93-4	1,2-Dibromoethane	1	not detected
127-18-4	Tetrachloroethene	10	140

FIXED GAS ANALYSIS

Permanent Gases By GC/TCD

Component	Sample Concentration Percent by Volume
Hydrogen	0.00
Oxygen	2.19
Nitrogen	42.36
Methane	26.36
Carbon Monoxide	0.00
Carbon Dioxide	27.50
Total	98.4

ATTACHMENT A - REPORT SHEET

EPA Method TO-14 GC/MS Analysis

Client:	AeroVironment	Sample Date:	5-15-90
Site:	MR-LG-05-02	Date Anal:	5-19-90
Lab #:	00497	Analyst:	Vivian Smith
Can #:	89		

CAS Number	Compound	MDL ppbv	Concentration ppbv
75-01-4	Vinyl Chloride	500	not detected
75-09-2	Dichloromethane	60	not detected
67-66-3	Chloroform	2	not detected
71-55-6	1,1,1-Trichloroethane	10	not detected
107-06-2	1,2-Dichloroethane	20	not detected
71-43-2	Benzene	5	21
56-23-5	Carbon Tetrachloride	500	not detected
79-01-6	Trichloroethene	10	not detected
106-93-4	1,2-Dibromoethane	1	not detected
127-18-4	Tetrachloroethene	10	20

FIXED GAS ANALYSIS

Permanent Gases By GC/TCD

Component	Sample Concentration Percent by Volume
Hydrogen	0.00
Oxygen	1.61
Nitrogen	75.92
Methane	2.34
Carbon Monoxide	0.00
Carbon Dioxide	19.12
Total	99.0

ATTACHMENT A - REPORT SHEET

EPA Method TO-14 GC/MS Analysis

Client:	AeroVironment	Sample Date:	5-15-90
Site:	MR-LG-00-02	Date Anal:	5-19-90
Lab #:	00500	Analyst:	Vivian Smith
Can #:	69		

CAS Number	Compound	MDL ppbv	Concentration ppbv
75-01-4	Vinyl Chloride	2.00	not detected
75-09-2	Dichloromethane	1.00	1.3
67-66-3	Chloroform	0.80	not detected
71-55-6	1,1,1-Trichloroethane	0.50	not detected
107-06-2	1,2-Dichloroethane	0.20	not detected
71-43-2	Benzene	2.00	not detected
56-23-5	Carbon Tetrachloride	0.20	not detected
79-01-6	Trichloroethene	0.60	not detected
106-93-4	1,2-Dibromoethane	0.50	not detected
127-18-4	Tetrachloroethene	0.20	not detected

Total Organic Compound

Client:	AeroVironment	Ref#:	MR-MG-01-02
Analyst:	Vivian Longacre	Lab #:	00519
		Can #:	49
		Date Sampled:	5-18-90
		Date Analyzed:	5-21-90

Methane ppmv	Non-Methane ppmv	Total Organic Carbon ppmv
25268	3	25271

Total Organic Compound

Client:	AeroVironment	Ref#:	MR-MG-02-02
Analyst:	Vivian Smith	Lab #:	00544
		Bag #:	86
		Date Sampled:	5-22-90
		Date Analyzed:	5-26-90

Methane ppmv	Non-Methane ppmv	Total Organic Carbon ppmv
2.2	13	15.2

Total Organic Compound

Client:	AeroVironment	Ref#:	MR-MG-03-02
Analyst:	Vivian Smith	Lab #:	00545
		Bag #:	125
		Date Sampled:	5-22-90
		Date Analyzed:	5-26-90

Methane ppmv	Non-Methane ppmv	Total Organic Carbon ppmv
< 1	5.0	5.0

Total Organic Compound

Client:	AeroVironment	Ref#:	MR-MG-04-02
Analyst:	Vivian Smith	Lab #:	00546
		Bag #:	105
		Date Sampled:	5-22-90
		Date Analyzed:	5-26-90

Methane ppmv	Non-Methane ppmv	Total Organic Carbon ppmv
< 1	5.2	5.2

Chain of Custody Record

AeroVironment Inc.
825 Myrtle Avenue
Monrovia, CA 91016
(818) 357-9983

Environmental Analytical Services
170 / C Granada
San Luis Obispo, CA 93401
(805) 541-3666

Project Name: EL TORO AIR SNAT Date: 5-16-90

Sampling Location: MAGAZINE ROAD Time: 0400

Sampling Team: NICK C. CONTRERAS

Lab Identification Number	AeroVironment Sample Reference Number	Canister/Bag Number	Final Pressure Final Condition[1] Lab	Field	Analysis Required	Sample Collection (Month/Day/Time)	Sample Expiration (Month/Day/Time)
✓	MR-IA-D1-08	A005			A1-AIR	5-16-90 / 0400	5-21-90 / 0400
✓	MR-IA-D1-01	AV128			A1-AIR	5-16-90 / 0400	5-21-90 / 0400

Comments:

Relinquished by: [signature] Received by: Date / Time:

Relinquished by: Received by: Date / Time:

Method of Shipment:

Laboratory Sample Custodian: Date:

Time:

Comments:

[1] F = 1/2 full to full, O = overfull (bulging), L = 1/4 to 1/2 full, E = ≪ 1/4 full but some sample, N = no sample

Sheet ____ of ____

Chain of Custody Record

393

AeroVironment Inc.
825 Myrtle Avenue
Monrovia, CA 91016
(818) 357-9983

Environmental Analytical Services
170 / C Granada
San Luis Obispo, CA 93401
(805) 541-3666

Project Name: El Toro Air SWATS

Date: 5/15/90

Sampling Location: Magazine Road Landfill

Time: 2000

Sampling Team: AGC + NC

Lab Identification Number	AeroVironment Sample Reference Number	Canister/Bag Number	Final Pressure Final Condition[1] Lab	Field	Analysis Required	Sample Collection (Month/Day/Time)	Sample Expiration (Month/Day/Time)	
	MR-LG-Ø5-Ø2	AVØ89	7.5psig		Al gas, PG	5/15/90 - 1735	5/20/90 - 1735	
	MR-LG-Ø1-Ø2	AVØ24	7.5psig		Al gas, PG	5/15/90 - 1841	5/20/90 - 1841	*
	MR-LG-Ø3-Ø2	AVØ91	7.5psig		Al gas, PG	5/15/90 - 2011	5/20/90 - 2011	*
	MR-LG-ØØ-Ø2	AVØ69	7.5psig		Al Air	5/15/90 - 2217	5/20/90 2217	

Comments: * This sample likely to be "hot." Took long time to clean sampler.

Relinquished by: [signature] Received by: ____ Date / Time: ____

Relinquished by: ____ Received by: ____ Date / Time: ____

Method of Shipment: Fed Ex.

Laboratory Sample Custodian: ____ Date: ____

Time: ____

Comments: ____

[1] F = 1/2 full to full, O = overfull (bulging), L = 1/4 to 1/2 full, E = ≪ 1/4 full but some sample, N = no sample

Sheet ____ of ____

N 386

Chain of Custody Record

AeroVironment Inc.
825 Myrtle Avenue
Monrovia, CA 91016
(818) 357-9983

Environmental Analytical Services
170 / C Granada
San Luis Obispo, CA 93401
(805) 541-3666

Project Name: EL TORO AIR SAMPLE Date: 5-17-90

Sampling Location: MAGAZINE ROAD. Time: 1200

Sampling Team: NICK CONTRERA

Lab Identification Number	AeroVironment Sample Reference Number	Canister/Bag Number	Final Pressure Final Condition[1] Lab	Field	Analysis Required	Sample Collection (Month/Day/Time)	Sample Expiration (Month/Day/Time)
	MR-IA-D2-01	AV129		6psig	Al-Air	5-17-90 / 0400	5-22-90 / 0400
	MR-IA-D2-08	AV 097		5psig	Al-Air	5-17-90 / 0400	5-22-90 / 0400

Comments: _____

Relinquished by: Nick Contrera Received by: _____ Date / Time: _____

Relinquished by: _____ Received by: _____ Date / Time: _____

Method of Shipment: _____

Laboratory Sample Custodian: _____ Date: _____

Time: _____

Comments: _____

[1] F = 1/2 full to full, O = overfull (bulging), L = 1/4 to 1/2 full, E = ≪ 1/4 full but some sample, N = no sample

Sheet ____ of ____

Chain of Custody Record

N. 387

AeroVironment Inc.
825 Myrtle Avenue
Monrovia, CA 91016
(818) 357-9983

Environmental Analytical Services
170 / C Granada
San Luis Obispo, CA 93401
(805) 541-3666

Project Name: EL Toro Air Show Date: 5-17-90

Sampling Location: MAGAZINE ROAD Time: 1200

Sampling Team: Nick C. Contrias

Lab Identification Number	AeroVironment Sample Reference Number	Canister/Bag Number	Final Pressure Final Condition[1] Lab	Field	Analysis Required	Sample Collection (Month/Day/Time)	Sample Expiration (Month/Day/Time)
	MR-IA-01-03	A003		6 PSIG	A1-AIR	5-16-90 / 1610	5-21-90 / 1610
	MR-IA-C1-04	A009		5.5 PSIG	A1-AIR	5-16-90 / 1610	5-21-90 / 1610
	MR-IA-01-09	AV-029		6 PSIG	A1-AIR	5-16-90 / 1600	5-21-90 / 1600

Comments: _____

Relinquished by: Nick C. Contrias Received by: _____ Date / Time: _____

Relinquished by: _____ Received by: _____ Date / Time: _____

Method of Shipment: _____

Laboratory Sample Custodian: _____ Date: _____

Time: _____

Comments: _____

[1] F = 1/2 full to full, O = overfull (bulging), L = 1/4 to 1/2 full, E = ≪ 1/4 full but some sample, N = no sample

Sheet ____ of ____

388

Chain of Custody Record

AeroVironment Inc.
825 Myrtle Avenue
Monrovia, CA 91016
(818) 357-9983

Environmental Analytical Services
170 / C Granada
San Luis Obispo, CA 93401
(805) 541-3666

Project Name: ELTORO AIR SWAT Date: 5-17-90

Sampling Location: MAGAZINE ROAD Time: 0930

Sampling Team: NICK C. CONTRERAS

Lab Identification Number	AeroVironment Sample Reference Number	Canister/Bag Number	Final Pressure Final Condition[1] Lab	Field	Analysis Required	Sample Collection (Month/Day/Time)	Sample Expiration (Month/Day/Time)
	MR-IA-C2-04	A013		7psig	A1-AIR	5-17-90 / 1755	5-22-90 / 1755
	MR-IA-02-09	A019		6.5psig	A1-AIR	5-17-90 / 1755	5-22-90 / 1755
	MR-IA-D3-01	AV075		4.5psig	A1-AIR	5-17-90 / 0400	5-22-90 / 0400

Comments: _____

Relinquished by: [signature] Received by: _____ Date / Time: _____

Relinquished by: _____ Received by: _____ Date / Time: _____

Method of Shipment: _____

Laboratory Sample Custodian: _____ Date: _____

Time: _____

Comments: _____

[1] F = 1/2 full to full, O = overfull (bulging), L = 1/4 to 1/2 full, E = ≪ 1/4 full but some sample, N = no sample

Sheet ____ of ____

363

Chain of Custody Record

AeroVironment Inc.
825 Myrtle Avenue
Monrovia, CA 91016
(818) 357-9983

Environmental Analytical Services
170 / C Granada
San Luis Obispo, CA 93401
(805) 541-3666

Project Name: EL TORO AIR SHOT

Date: 5-18-90

Sampling Location: MAGAZINE RD.

Time: 0930

Sampling Team: NICK

Lab Identification Number	AeroVironment Sample Reference Number	Canister/Bag Number	Final Pressure Final Condition[1] Lab	Field	Analysis Required	Sample Collection (Month/Day/Time)	Sample Expiration (Month/Day/Time)
	MR-IA-02-03	A002		7.0	A1-AIR	5-18-90/1755	5-23-90/1755
	MR-IA-D3-08	A016		7.0	A1-AIR	5-18-90/0400	5-23-90/0400
	~~[illegible]~~	~~[illegible]~~					

Comments:

Relinquished by: [signature] Received by: ____ Date / Time: ____

Relinquished by: ____ Received by: ____ Date / Time: ____

Method of Shipment: ____

Laboratory Sample Custodian: ____ Date: ____

Time: ____

Comments:

[1] F = 1/2 full to full, O = overfull (bulging), L = 1/4 to 1/2 full, E = ≪ 1/4 full but some sample, N = no sample

Sheet ____ of ____

Chain of Custody Record

364

AeroVironment Inc.
825 Myrtle Avenue
Monrovia, CA 91016
(818) 357-9983

Environmental Analytical Services
170 / C Granada
San Luis Obispo, CA 93401
(805) 541-3666

Project Name: El Toro Air SWAT

Date: 5/18/90

Sampling Location: Magazine Road

Time: 2100

Sampling Team: ASC, DVD

Lab Identification Number	AeroVironment Sample Reference Number	Canister/Bag Number	Final Pressure Final Condition[1] Lab	Field	Analysis Required	Sample Collection (Month/Day/Time)	Sample Expiration (Month/Day/Time)
	MR-IS-01-03	85		F	TOC	5/18/90 2009	5/21/90 2009

Comments: _____

Relinquished by: [signature] Received by: _____ Date / Time: _____

Relinquished by: _____ Received by: _____ Date / Time: _____

Method of Shipment: _____

Laboratory Sample Custodian: _____ Date: _____

Time: _____

Comments: _____

[1] F = 1/2 full to full, O = overfull (bulging), L = 1/4 to 1/2 full, E = ≪ 1/4 full but some sample, N = no sample

Sheet ____ of ____

365

Chain of Custody Record

AeroVironment Inc.
825 Myrtle Avenue
Monrovia, CA 91016
(818) 357-9983

Environmental Analytical Services
170 / C Granada
San Luis Obispo, CA 93401
(805) 541-3666

Project Name: El Toro Air SWAT

Date: 5/18/90

Sampling Location: Magazine Road

Time: 2100

Sampling Team: AJC + DVD

Lab Identification Number	AeroVironment Sample Reference Number	Canister/Bag Number	Final Pressure Final Condition[1] Lab	Field	Analysis Required	Sample Collection (Month/Day/Time)	Sample Expiration (Month/Day/Time)
	MR-IA-Ø3-Ø4	AVØ36		7.5 psig	Al air	5/18/90 1840	5/23/90 1840
	MR-IA-C3-Ø4	AVØ92		5.5 psig	Al air	5/18/90 1845	5/23/90 1845
	MR-IA-Ø3-Ø3	AVØ83		7.5 psig	Al air	5/18/90 1845	5/23/90 1845

Comments: _____

Relinquished by: [signature] Received by: _____ Date / Time: _____

Relinquished by: _____ Received by: _____ Date / Time: _____

Method of Shipment: _____

Laboratory Sample Custodian: _____ Date: _____

Time: _____

Comments: _____

[1] F = 1/2 full to full, O = overfull (bulging), L = 1/4 to 1/2 full, E = ≪ 1/4 full but some sample, N = no sample

Sheet ____ of ____

Chain of Custody Record

N 366

AeroVironment Inc.
825 Myrtle Avenue
Monrovia, CA 91016
(818) 357-9983

Environmental Analytical Services
170 / C Granada
San Luis Obispo, CA 93401
(805) 541-3666

Project Name: El Toro Air SWATS

Date: 5/18/90

Sampling Location: Magazine Road

Time: 2115

Sampling Team: ASC DVD

Lab Identification Number	AeroVironment Sample Reference Number	Canister/Bag Number	Final Pressure Final Condition[1] Lab	Field	Analysis Required	Sample Collection (Month/Day/Time)	Sample Expiration (Month/Day/Time)
	MR-LG-01-02	AV133		7.5 psig	Algas, ~~BTEX~~ PG	5/18/90 1933	5/23/90 1933 *
	MR-MG-01-02	AV049		7.5 psig	TOC	5/18/90 1818	5/23/90 1818

Comments: * sample likely to be "hot."

Relinquished by: [signature] Received by: ____ Date / Time: ____

Relinquished by: ____ Received by: ____ Date / Time: ____

Method of Shipment: ____

Laboratory Sample Custodian: ____ Date: ____

Time: ____

Comments: ____

[1] F = 1/2 full to full, O = overfull (bulging), L = 1/4 to 1/2 full, E = ≪ 1/4 full but some sample, N = no sample

Sheet ____ of ____

Chain of Custody Record

415

AeroVironment Inc.
825 Myrtle Avenue
Monrovia, CA 91016
(818) 357-9983

Environmental Analytical Services
170 / C Granada
San Luis Obispo, CA 93401
(805) 541-3666

Project Name: EL TORO AIR SWAT

Date: 5 27 90

Sampling Location: MAGAZINE ROAD

Time: 1100

Sampling Team: DV / NC

Lab Identification Number	AeroVironment Sample Reference Number	Canister/Bag Number	Final Pressure Final Condition[1] Lab	Field	Analysis Required	Sample Collection (Month/Day/Time)	Sample Expiration (Month/Day/Time)
	MR-MG-02-02	AV086		7½ PSI	TOC	5-22-90 / 1700	5-27-90 / 1700
	MR-MG-03-02	AV125		7½ PSI	TOC	5-22-90 / 1730	5-27-90 / 1730
	MR-MG-04-02	AV105		7½ PSI	TOC	5-22-90 / 1800	5-27-90 / 1800
	MR-LG-02-02	AV098		7½ PSI	CG-GAS, PG	5-22-90 / 1845	5-27-90 / 1845

Comments:

Relinquished by: D. [illegible] Received by: ____ Date / Time: ____

Relinquished by: ____ Received by: ____ Date / Time: ____

Method of Shipment: FED-EX

Laboratory Sample Custodian: ____ Date: ____

Time: ____

Comments:

[1] F = 1/2 full to full, O = overfull (bulging), L = 1/4 to 1/2 full, E = ≪ 1/4 full but some sample, N = no sample

Sheet ____ of ____

Chain of Custody Record

148

AeroVironment Inc.
825 Myrtle Avenue
Monrovia, CA 91016
(818) 357-9983

Environmental Analytical Services
170 / C Granada
San Luis Obispo, CA 93401
(805) 541-3666

Project Name: El Toro Air SWATs

Date: 6/22/90

Sampling Location: Communication & Magazine Road

Time: 1500

Sampling Team: AGC & NC

Lab Identification Number	AeroVironment Sample Reference Number	Canister/Bag Number	Final Pressure Final Condition[1] Lab	Field	Analysis Required	Sample Collection (Month/Day/Time)	Sample Expiration (Month/Day/Time)
	CO-LG-R1-02	AV103		7.5	Algas, PG	6/22 1100	6/27 1100
	CO-LG-R2-02	AV086		7.5	Algas, PG	6/22 1140	6/27 1140
	MR-LG-R1-02	AV127		7.5	Algas, PG	6/22 1945	6/27 1945
	MR-LG-R2-02	AV024		7.5	Algas, PG	6/22 0700	6/27 0700

Comments: _____

Relinquished by: _____ Received by: _____ Date / Time: _____

Relinquished by: _____ Received by: _____ Date / Time: _____

Method of Shipment: _____

Laboratory Sample Custodian: _____ Date: _____

Time: _____

Comments: _____

[1] F = 1/2 full to full, O = overfull (bulging), L = 1/4 to 1/2 full, E = ≪ 1/4 full but some sample, N = no sample

Appendix E

SCREENING QUESTIONNAIRE

Other 4 Sites

UNITED STATES MARINE CORPS
MARINE CORPS AIR STATION
EL TORO (SANTA ANA) CALIFORNIA 92709

IN REPLY REFER TO

6280
1JG.30F3

13 NOV 1986

South Coast Air Quality Management District
9150 Flair Drive
El Monte, CA 91731

Dear Sir:

As requested by your letters of 16 October 1986, we are submitting the questionnaires for the inactive solid waste disposal sites located at the Marine Corps Air Station El Toro and the Marine Corps Air Station Tustin.

Sincerely,

S. R. HOLM, JR., CAPT, CEC, USN
Director, Facilities Mgmt. Dept.
By direction of Commanding General

Encl:
(1) Questionnaire for Inactive Landfills at MCAS El Toro
(2) Questionnaire for Inactive Landfills at MCAS Tustin

STATE OF CALIFORNIA

AIR RESOURCES BOARD

SCREENING QUESTIONNAIRE FOR INACTIVE SOLID WASTE DISPOSAL SITES
Health and Safety Code Section 41805.5

SITE OWNERSHIP

Site name MARINE CORPS AIR STATION EL TORO

Site location ORANGE COUNTY

Site address MARINE CORPS AIR STATION, EL TORO
SANTA ANA, CA 92709

Nearest Cross Streets TRABUCO AND SAND CANYON

Current site owner FEDERAL GOVERNMENT

Street address N/A

Mailing address MCAS EL TORO
FACILITIES MANAGEMENT DEPT, CODE 1JG
SANTA ANA, CA 92709

Contact Person BEVERLY VAN CLEEF Telephone Number (714) 651-2821

Previous site owners N/A

Provide the name and mailing address of all the previous site owners with the most recent owner first. (Attach additional pages if necessary.)

Owner N/A

Mailing Address

Dates

Owner

Mailing Address

Dates

Owner

Mailing Address

Dates

Owner

Mailing Address

Dates

Company performing site maintenance

Mailing address N/A

Contact person Telephone number

SITE HISTORY See Attachment A

Date site started receiving waste: Date Site stopped receiving waste:

Percent of site filled by:

January 1, 1960 January 1, 1970

January 1, 1980 January 1, 1984

Was the waste received by this site ever burned on a routine basis? YES NO

If yes, provide the following:

Date site started burning on a routine basis:

Date site stopped burning on a routine basis:

Has landfill gas migration ever been detected off site? YES NO

If yes, describe the event(s) in detail including date(s). (Attach additional pages if necessary.)

Have landfill gas odors ever been detected off site? YES NO

If yes, describe the event(s) in detail including date(s). (Attach additional sheets if necessary.)

Has any landfill gas, ambient air, or gas migration testing ever been conducted at the site? YES NO

If yes, summarize the testing and the results including date(s). (Attach additional sheets if necessary.)

Has this site ever been subject to any enforcement action by any Federal, state, or local agency as a result of underground gas migration or gaseous emissions to the atmosphere?

YES NO

If yes, summarize the enforcement action(s) and reason(s) including date(s). (Attach additional sheets if necessary.)

SITE DESCRIPTION See Attachment B

Type of fill (Circle appropriate line)

Canyon

Pit

Area (Trench)

Other-Describe

Provide estimate for:

Total Site Acreage

Waste Disposal Area Acreage

Volume of Waste (cubic yards)

Quantity of Waste (tons)

Minimum Depth of Waste (feet)

Maximum Depth of Waste (feet)

Average Depth of Waste (feet)

Average Thickness Of Existing Top Cover (feet)

Does This Site Have A Liner? YES NO

If Yes, Describe:

Type of Cover Material

Provide a map to scale showing the boundaries of the total site and the waste disposal area.

See Attachment C

Identify all existing land uses on this site. (Circle appropriate item(s)).

Single family residential

Hotel

Multi family residential

Park

Commercial

Undeveloped

Communication Station Landfill Perimeter Road landfill and Magazine Road landfill

Industrial

Other (specify)

Flight Simulator Bldg located on "original landfill site."

Hospital

School

For any undeveloped areas of this site, what land uses are currently proposed? (Circle appropriate item(s).)

Single family residential	Hotel
Multi family residential	Park
Commercial	
Industrial	Other (specify)
Hospital	NONE
School	

WASTE DESCRIPTION

Estimate of Solid Waste Received (Total of entries for residential, commercial, industrial, demolition, and other should add up to 100%.)

33 % Residential 33% % Commercial

34 % Industrial 33% 33 % Demolition

% Other

Describe material under "other" and give its percentage.

Material	Percentage

Were liquids ever accepted at this site? YES NO

If yes, describe all liquids received, their corresponding volumes and the disposal methods employed such as injection, evaporation ponds, containers, codisposal, etc. (Attach additional sheets if necessary.)

Liquid	Gallons	Disposal method
SOLVENTS	UNKNOWN	UNKNOWN
PAINTS	"	"
OILY WASTES	"	"
KITCHEN WASTE	"	"

Were hazardous wastes in greater than household amounts ever accepted at this site?

YES NO

If yes, describe all hazardous wastes received and the corresponding volumes. (Attach additional sheets if necessary.)

Hazardous Waste	Volume

Waste types and quantities are unknown.

SURROUNDING LAND USE See Attachment D

Give the distance in miles (to the nearest 0.01 mile) to the nearest:

Occupied building	Describe the Building and Use
Residential Area	School
Hospital	Park
Shopping Center	Business
Public Thoroughfare	

Provide an aerial photograph or topographic map showing the surrounding area within two miles of the solid waste disposal site's perimeter . The photograph or map must identify all land uses in the area and highlight areas of high population such as housing, schools, restaurants, and shopping centers. For areas that are currently undeveloped, the proposed land uses must be shown.

See Attachment E

What is the population within two (2) miles of the perimeter of the site? Indicate the source of the information and the date of the data. (Possible sources include the county planning agency and the 1980 Federal Decennial Census)

Population Unknown Source —Date

ADDITIONAL INFORMATION

Attach a copy of any waste discharge permits under which the site operated.

Please provide any comments or additional information which you feel will assist in evaluating your site.

PERSON COMPLETING THIS FORM

Signature Beverly Van Cleef 11/12/84

Printed Name Beverly Van Cleef

Title Environmental Engineer

Company Name MCAS EL TORO

Date 11/10/86

Address FACILITIES MANAGEMENT DEPT, CODE 1JG

Phone (714) 651-2821

City, State, ZIP SANTA ANA, CA. 92709

OPTIONAL QUESTIONS

LANDFILL GAS COLLECTION SYSTEM

Is a landfill gas collection system installed? YES NO

If yes, provide the following information:

Date system installation completed Date system started operating

Is the system currently operating? YES NO

If no, explain why.

Percent of time system is on line

Name of company operating the system

Mailing address

Contact Person

Title Telephone number

APCD or AQMD application and permit numbers:

Application number

Permit number

System Design (Circle applicable items)
Vertical wells Horizontal Collection Trenches

Perimeter migration control system Interior migration control system

Gas recovery system, interior collection only

Gas collection system capacity in CFM

Disposition of collected landfill gas (Circle applicable items.)
Vented to Atmosphere Flared
Sold as Fuel Used as Fuel on Site

ATTACHMENT A

SITE HISTORY

1. MAGAZINE ROAD LANDFILL Site 2

DATE SITE STARTED RECEIVING WASTE LATE 1960'S

DATE SITES STOPPED RECEIVING WASTE 1950

PERCENT OF SITE FILLED BY:
JANUARY 1, 1960: 0 JANUARY 1, 1970: UNKNOWN
JANUARY 1, 1980: 100% JANUARY 1, 1984: --

WAS THE WASTE RECEIVED BY THIS SITE EVER BURNED ON A ROUTINE BASIS? --

IF YES, PROVIDE THE FOLLOWING. N/A

DATE SITE STARTED BURNING ON A ROUTINE BASIS: N/A

DATE SITE STOPPED BURNING ON A ROUTINE BASIS. N/A

HAS LANDFILL GAS MIGRATION EVER BEEN DETECTED OFF SITE? NO.

2. ORIGINAL LANDFILL
DATE SITE STARTED RECEIVING WASTE. 1943 Site 3

DATE SITES STOPPED RECEIVING WASTE: 1955

PERCENT OF SITE FILLED BY:
JANUARY 1, 1960. 100% JANUARY 1, 1970 --
JANUARY 1, 1980: -- JANUARY 1, 1984 --

WAS THE WASTE RECEIVED BY THIS SITE EVER BURNED ON A ROUTINE BASIS? YES

IF YES, PROVIDE THE FOLLOWING:

DATE SITE STARTED BURNING ON A ROUTINE BASIS: 1943

DATE SITE STOPPED BURNING ON A ROUTINE BASIS: 1955

HAS LANDFILL GAS MIGRATION EVER BEEN DETECTED OFF SITE? NO

3. PERIMETER ROAD LANDFILL
DATE SITE STARTED RECEIVING WASTE: 1955 Site 5

DATE SITES STOPPED RECEIVING WASTE: LATE 1960'S

PERCENT OF SITE FILLED BY:
JANUARY 1, 1960: 100% JANUARY 1, 1970: --
JANUARY 1, 1980: -- JANUARY 1, 1984: --

WAS THE WASTE RECEIVED BY THIS SITE EVER BURNED ON A ROUTINE BASIS? YES

IF YES, PROVIDE THE FOLLOWING

DATE SITE STARTED BURNING ON A ROUTINE BASIS 1955

DATE SITE STOPPED BURNING ON A ROUTINE BASIS LATE 1960'S

HAS LANDFILL GAS MIGRATION EVER BEEN DETECTED OFF SITE? NO

4. COMMUNICATION STATION LANDFILL
DATE SITE STARTED RECEIVING WASTE: 1951 Site 17

DATE SITES STOPPED RECEIVING WASTE: 1983

PERCENT OF SITE FILLED BY:

JANUARY 1, 1960: 0	JANUARY 1, 1970: 0
JANUARY 1, 1980: 0	JANUARY 1, 1984: 100%

WAS THE WASTE RECEIVED BY THIS SITE EVER BURNED ON A ROUTINE BASIS? NO

IF YES, PROVIDE THE FOLLOWING N/A

DATE SITE STARTED BURNING ON A ROUTINE BASIS: N/A

DATE SITE STOPPED BURNING ON A ROUTINE BASIS: N/A

HAS LANDFILL GAS MIGRATION EVER BEEN DETECTED OFF SITE? NO

ATTACHMENT 3

1. MAGAZINE ROAD LANDFILL 5.4 2
TYPE OF FILL PIT

TOTAL ACREAGE OF BASE 5000

WASTE DISPOSAL AREA ACREAGE. 22

VOLUME OF WASTE: UNKNOWN

QUANTITY OF WASTE: UNKNOWN

MINIMUM DEPTH OF WASTE UNKNOWN

MAXIMUM DEPTH OF WASTE: UNKNOWN

AVERAGE DEPTH OF WASTE: UNKNOWN

AVERAGE THICKNESS OF EXISTING TOP COVER: UNKNOWN

DOES THIS SITE HAVE A LINER? NO.

IF YES, DESCRIBE: --

TYPE OF COVER MATERIAL. DIRT

2. ORIGINAL LANDFILL 5.4 3

TYPE OF FILL. TRENCHES AND PITS

TOTAL ACREAGE OF BASE: 5,000

WASTE DISPOSAL AREA ACREAGE: 20

VOLUME OF WASTE: ESTIMATED BETWEEN 163,000 AND 243,000 CUBIC YARDS.

QUANTITIY OF WASTE: UNKNOWN

MINIMUM DEPTH OF WASTE: UNKNOWN

MAXIMUM DEPTH OF WASTE: UNKNOWN

AVERAGE DEPTH OF WASTE: UNKNOWN

AVERAGE THICKNESS OF EXISTING TOP COVER: UNKNOWN

DOES THIS SITE HAVE A LINER: NO

IF YES, DESCRIBE: --

TYPE OF COVER MATERIAL: DIRT

3 PERIMETER ROAD LANDFILL Site 5

TYPE OF FILL: TRENCH

TOTAL ACREAGE OF BASE: 5,000

WASTE DISPOSAL AREA ACREAGE: UNKNOWN ESTIMATED TO BE 1200' X 60'

VOLUME OF WASTE: ESTIMATED BETWEEN 50,000 TO 60,000 CUBIC YARDS

QUANTITIY OF WASTE: UNKNOWN

MINIMUM DEPTH OF WASTE: UNKNOWN

MAXIMUM DEPTH OF WASTE: ESTIMATED TO BE 25 FT.

AVERAGE DEPTH OF WASTE: UNKNOWN

AVERAGE THICKNESS OF EXISTING TOP COVER: UNKNOWN

DOES THIS SITE HAVE A LINER? NO

IF YES, DESCRIBE: --

TYPE OF COVER MATERIAL: DIRT

4. COMMUNICATION STATION LANDFILL Site 17

TYPE OF FILL: WASTES WERE DISPOSED OF ABOVEGROUND BUT WERE LATER COVERED BY SOIL CUT FROM A NEARBY HILL THAT WAS BEING LEVELED TO MEET CLEARANCE CRITERIA FOR THE RUNWAY.

TOTAL ACREAGE OF BASE: 5,000

WASTE DISPOSAL AREA ACREAGE: 26

VOLUME OF WASTE: UNKNOWN

QUANTITIY OF WASTE: UNKNOWN

MINIMUM DEPTH OF WASTE: UNKNOWN

MAXIMUM DEPTH OF WASTE: UNKNOWN

AVERAGE DEPTH OF WASTE: UNKNOWN

AVERAGE THICKNESS OF EXISTING TOP COVER: UNKNOWN

DOES THIS SITE HAVE A LINER: NO

IF YES, DESCRIBE: --

TYPE OF COVER MATERIAL: DIRT

ATTACHMENT D

1. MAGAZINE ROAD LANDFILL site 2

GIVE THE DISTANCE IN MILES TO THE NEAREST

OCCUPIED BUILDING 0.22
DESCRIBE THE BUILDING AND USE MAGAZINE EQUIPMENT SHED USED BY ORDNANCE PERSONNEL
RESIDENTIAL AREA: 0.71
HOSPITAL: 2.71
SHOPPING CENTER: 2.70
PUBLIC THOROUGHFARE 0.64
SCHOOL: 1.42
PARK: 2.57
BUSINESS 1.42

2. ORIGINAL LANDFILL site 3

GIVE THE DISTANCE IN MILES TO THE NEAREST:

OCCUPIED BUILDING: 0
DESCRIBE THE BUILDING AND USE: FLIGHT SIMULATOR BUILDING
RESIDENTIAL AREA: 0.14
HOSPITAL: 1.56
SHOPPING CENTER: 1.50
PUBLIC THOROUGHFARE: 0.07
SCHOOL: 0.35
PARK: 1.77
BUSINESS: 0.64

3. PERIMETER ROAD LANDFILL site 5

GIVE THE DISTANCE IN MILES TO THE NEAREST:

OCCUPIED BUILDING: 2.13
DESCRIBE THE BUILDING AND USE: FEDERAL AVIATION ADMINISTRATION, RADA BUILDING.
RESIDENTIAL AREA: 0.85
HOSPITAL: 2.21
SHOPPING CENTER: 2.29
PUBLIC THOROUGHFARE: 0.01
SCHOOL: 1.21
PARK: 2.73
BUSINESS: 1.42

4. COMMUNICATION STATION LANDFILL site 17

GIVE THE DISTANCE IN MILES TO THE NEAREST:

OCCUPIED BUILDING: 0.14
DESCRIBE THE BUILDING AND USE: REMOTE RECEIVER BUILDING
RESIDENTIAL AREA: 0.39
HOSPITAL: 2.35
SHOPPING CENTER: 2.34
PUBLIC THOROUGHFARE: 0.56
SCHOOL: 1.14
PARK: 2.29
BUSINESS: 1.07

MWR
5A.4

6280
1JG

30 NOV 1987

South Coast Air Quality Management District
9150 Flair Drive
El Monte, CA 91731

Dear Sirs:

Section 41805(B) of the Health and Safety Code provides for solid waste air quality testing at inactive landfills by January 2, 1988. Although federal facilities may not be subject to this requirement, we intend, in keeping with our continued concern for environmental protection, and in the interest of cooperation with the District, to conduct such testing at the Marine Corps Air Stations at El Toro and Tustin. However, it is necessary that we request a six month extension to complete the testing.

The air quality assessment testing has already been incorporated into our Installation Restoration Program (IRP) for both bases. However, the consulting firm performing the investigation for the IRP, James M. Montgomery Consulting Engineers, Inc., cannot begin testing until its contract has been modified and funds are appropriated for the additional work. Such contract modifications and appropriations take from two to three months to accomplish, and performance will take at least ninety days. Accordingly, the six month extension of time is needed.

Our contractor will submit a proposed plan of action to SCAQMD as soon as possible, probably in the early part of January. The testing should be complete by mid-year.

Please advise if there is any difficulty with this performance schedule. If you have any questions, please contact Ensign Michael Rehor, Environmental Director, at (714) 651-2821.

Sincerely,

S. R. HOLM, JR., CAPT, CEC, USN
Director, Facilities Mgmt. Dept.
By direction of Commanding General

Blind copy to:
STA OFL STA DAY [redacted] FM FILE FM LOG LAQ

Commanding Officer
(Code 114B)
Western Division

South Coast
AIR QUALITY MANAGEMENT DISTRICT
9150 FLAIR DRIVE, EL MONTE, CA 91731 (818) 572-6200

January 11, 1988

Ensign Michael Rehor
Environmental Director
Marine Corps Air Station El Toro
Facilities Management Department, Code 1JG
Santa Ana, CA 92709-5001

Dear Ensign Rehor:

Thank you for your letter dated November 30, 1987, describing the status of the Solid Waste Air Quality Assessment Test (SWAQAT) Report for the Marine Corps Air Station disposal sites at El Toro and Tustin, California. In this letter you also requested a 6 month extension to the report deadline required by Section 41805.5 of the California Health & Safety Code.

As you know, Section 41805.5 of the State Health and Safety Code requires that all solid waste assessment test reports for inactive disposal sites must be submitted to the district on or before January 1, 1988. The District has the responsibility of enforcing Section 41805.5 and intends to issue a Notice of Violation to any inactive site which fails to submit their SWAQAT Report by the required date. Once issued, the Notice of Violation may be processed either criminally or civilly depending on the specific case. For most cases, the District plans to impose compliance schedules through the resolution of the Notices of Violation by the Mutual Letter Settlement program.

We have discussed with our Legal Division the possibility of a site requesting a variance from the District Hearing Board to obtain additional time to submit their SWAQAT Report. They advised us that the Hearing Board does not have the authority to grant variances for Section 41805.5 of the State Health and Safety Code.

1JG
1JG 10
1JG 20
1JG 30
1JG 40
1JG S

The testing guidelines issued by the California Air Resources Board indicates a district may place a disposal site on a compliance schedule which includes a date by which a report must be filed. However, the District feels the imposition of a compliance schedule must be accomplished through an enforcement action and therefore has established the above described process.

As a result, your request for a 6 month extension cannot be approved.

If you have any questions, please call Mrs. Stacey Ebiner, Senior Air Quality Engineer, at (818) 572-6318 or Mr. Hugh Heney, Supervising Air Quality Inspector, at (818) 572-6195.

Very truly yours,

William J. Dennison
Director of Engineering

Mohsen Nazemi
Supv. A. Q. Engineer

SMKE

UNITED STATES MARINE CORPS
MARINE CORPS AIR STATION
EL TORO (SANTA ANA), CALIFORNIA 92709-5001

IN REPLY REFER TO
6280
1JG

29 MAR 1988

RECEIVED
MAR 30 1988
AEROVIRONMENT

South Coast Air Quality Management District
9150 Flair Drive
El Monte, CA 91731

Dear Sirs:

The Marine Corps Air Stations at El Toro and Tustin are currently working on the solid waste air quality assessment testing at inactive landfills as provided by Section 41805(B) of the California Health and Safety Code. In keeping with our continued cooperation with the District, we wish to provide an update on the status of the testing.

The air quality assessment testing has been incorporated into our Installation Restoration Program (IRP) for both stations. James M. Montgomery, Consulting Engineers, Inc., the firm performing the IRP investigation, has contracted AeroVironment, Inc. to develop the proposals and perform testing on the landfills.

A meeting was held on March 22, 1988 between representatives from the Marine Corps, James M. Montgomery, AeroVironment and Mrs. Stacey Ebiner, Senior Air Quality Engineer on your staff. At this meeting, various technical questions on the testing were answered by Ms. Ebiner. With this information, AeroVironment has begun developing the proposals for the assessment testing.

The proposed plan of action should be submitted in the early part of May. After the proposals are reviewed and approved, we will initiate the appropriate actions in order to accomplish the testing.

If you have any questions, please contact Ensign Michael Rehor, Environmental Director, at (714) 651-2821.

J. R. APPLEGATE, LCDR, CEC, USNR
Deputy Director, Facilities Mgmt. Dept.
By direction of Commanding General

Copy to:
James M. Montgomery, Consulting Engineers, Inc.
AeroVironment, Inc.

STRATA *Technologies Inc.*

"Strategic Assessment and Toxics Abatement"

8 April 1988
Please Reference: 50050

Ms. Stacey M. K. Ebiner
Senior Air Quality Engineer
South Coast
Air Quality Management District
9150 E. Flair Drive
El Monte, CA 91731

Dear Ms. Ebiner:

It was a pleasure meeting you at our meeting concerning the Air SWAT proposals for the El Toro Marine Corps Air Station. I have summarized the items we discussed and the key points that Strata Technologies is using to prepare the Air SWAT proposals.

- The disposal history and location of the five abandoned landfills has been researched as part of the MCAS environmental investigation programs. Based on the suspected porportion of municipal waste to other wastes, the proposals will be prepared using the guidelines for active, non-hazardous sites.

- One site may be classified as a Category II landfill. The other four will be classified as Category I sites.

The proposals are being prepared according to the guidelines and as we discussed. If you have any questions please feel free to contact me at (818) 357-9023.

Sincerely,

Stacy Lovdahl

Stacy Lovdahl
Associate Project Manager

cc. Ken Reich - James M. Montgomery

An AeroVironment Company

825 Myrtle Avenue • Monrovia, California 91016 • Telephone 818/357-9023 • Telex 467 121, AEROVIR-CI

UNITED STATES MARINE CORPS
MARINE CORPS AIR STATION
EL TORO (SANTA ANA), CALIFORNIA 92709-5001

IN REPLY REFER TO
6280
1JG.

16 MAY 1988

South Coast Air Quality Management District
Engineering Division
9150 Flair Drive
El Monte, CA 91731

Attn: Stacy Ebiner

Dear Ms. Ebiner:

As required by Section 41805(B) of the California Health and Safety Code, the Solid Waste Air Quality Assessment Test (SWAQAT) Plans for the four inactive landfills at Marine Corps Air Station (MCAS) El Toro are submitted for your review.

We plan to proceed diligently with the actual testing, once the SWAQAT Plans are approved. Therefore, we would appreciate if you could review our plans in a timely manner.

Please note that the SWAQAT Plan for the inactive landfill at MCAS Tustin will be submitted within the next two weeks. If you have any questions, please contact Ensign Michael Rehor, Environmental Director, at (714) 651-2821.

Sincerely,

S. R. HOLM, JR., CAPT, CEC, USN
Director, Facilities Mgmt. Dept.
By direction of Commanding General

Encl:
1. SWAQAT Plan for the Perimeter Road Disposal Site (3 copies)
2. SWAQAT Plan for the Communications Station Landfill (3 copies)
3. SWAQAT Plan for the Original Landfill (3 copies)
4. SWAQAT Plan for the Magazine Road Landfill (3 copies)

Copy to:
James M. Montgomery Consulting Engineers, Inc. (w/o encl.)
AeroVironment, Inc. (w/o encl.)

RECEIVED
MAY 16 1988
STRATA

STRATA Technologies Inc.

"Strategic Assessment and Toxics Abatement"

20 July 1988
Please reference: 50050

Mr. Bijan Ataian
SCAQMD
9150 E. Flair Drive
El Monte, CA 91731

Dear Mr. Ataian:

The purpose of this letter is to revise a statement in five Air SWAT Work Plans recently submitted to SCAQMD. The Work Plans are:

U.S. Marine Corps Air Station - El Toro
- Communications Station Landfill
- Perimeter Road Disposal Site
- Magazine Road Landfill
- Original Landfill

U.S. Marine Corps Air Station - Tustin
- Moffett Trenches

We will collect ambient air drainage samples (less than 24-hour samples) at the above five sites for at least 4 hours. I hope this clarifies our submittals and resolves any questions you may have. Please contact me if you require further information.

Sincerely,

Stacy D. Lovdahl
Project Manager

cc. Kenneth D. Reich - James Montgomery
Michael Rehor - USMCAS

An AeroVironment Company

825 Myrtle Avenue • Monrovia, California 91016 • Telephone 818/357-9023 • Telex 467 121, AEROVIR-CI

STRATA Technologies Inc.

Strategic Assessment and Toxics Abatement

9 August 1988
Please reference: 50050

Mr. Bijan Ataian
SCAQMD
9150 E. Flair Drive
El Monte, CA 91731

Dear Mr. Ataian:

The following information is provided in response to our telephone conversation yesterday. The Air SWAT Work Plans recently submitted to SCAQMD for the U.S. Marine Corps Air Station - El Toro Communications Station Landfill and the Magazine Road Landfill are revised to include the following information. This information is in addition to section 4 in both Plans.

Two sets of air samples will be collected each day, one set for 24 hours and one set during nightime drainage conditions. During drainage conditions the samplers will be turned on after drainage conditions start (as early as 10:00 pm) and turned off four hours later before they end (by 5:00 to 7:00 am).

I hope this clarifies our submittals and resolves any questions you may have. Please contact me if you require further information.

Sincerely,

Stacy D. Lovdahl

Stacy D. Lovdahl
Project Manager

cc. Kenneth D. Reich - James Montgomery
Michael Rehor - USMCAS

An AeroVironment Company

825 Myrtle Avenue • Monrovia, California 91016 • Telephone 818/357-9023 • Telex 467 121, AEROVIR-C

STRATA Technologies Inc.

"Strategic Assessment and Toxics Abatement"

7 September 1988
Please reference: 50050

Mr. Bijan Ataian
SCAQMD
9150 E. Flair Drive
El Monte, CA 91731

Dear Mr. Ataian:

The following information is provided in response to our telephone conversation today. The Air SWAT Work Plans recently submitted to SCAQMD for the U.S. Marine Corps Air Station - El Toro Perimeter Road Landfill is revised to include the following information. This information is in addition to section 4.

Two sets of air samples will be collected each day, one set for 24 hours and one set during nightime drainage conditions. During drainage conditions the samplers will be turned on after drainage conditions start (as early as 10:00 pm) and turned off four hours later before they end (by 5:00 to 7:00 am).

I hope this clarifies our submittal and resolves any questions you may have. I understand from our conversation that the Air SWAT Work Plans for Communications Station, Original Road and Magazine Road landfills at MCAS El Toro Station and the Moffett Trenches landfill at the Tustin Station are approved and that the Perimeter Road Plan will be approved on receipt of this submittal. Please contact me if you require further information.

Sincerely,

Stacy D. Lovdahl

Stacy D. Lovdahl
Project Manager

cc. **Kenneth D. Reich - James Montgomery**
Michael Rehor - USMCAS

An AeroVironment Company

825 Myrtle Avenue • Monrovia, California 91016 • Telephone 818/357-9023 • Telex 467 121, AEROVIR-CI