M60050.000195
MCAS EL TORO
SSIC # 5090.3

AB 2588 AIR TOXIC EMISSIONS INVENTORY REPORT
MARINE CORPS AIR STATION, EL TORO
SANTA ANA, CALIFORNIA
FOR U.S. NAVY SOUTHWEST DIVISION
CONTRACT NO. N68711-89-D-2001,
DELIVERY ORDER NO. 0020

JOB NO. 12912-032-130
NOVEMBER 1990

DAMES & MOORE

SOUTH COAST AIR QUALITY MANAGEMENT DISTRICT

9150 Flair Drive
El Monte, CA 91731

AB 2588 AIR TOXICS INVENTORY REPORT
APPLICATION FORM

Company Name: MARINE CORPS AIR STATION EL TORO

Mailing Address: FACILITIES MANAGEMENT DEPT. (1JG)

SANTA ANA, CALIFORNIA 92709-5001

Facility Address: MARINE CORPS AIR STATION EL TORO

EL TORO, CALIFORNIA 92709-5001

Facility AQMD ID #: 006281 (From your plan approval letter)

Contact Person (Company Official): MR. SAM LAM

Telephone #: (714)726-6607

Report Preparer (If not a Company Official): MS. LIDA MOUSSAVIAN

Telephone #: (714)433-2000

Signature of the Report Preparer:

Signature of Responsible Company Official:

Plan Date

THIS FORM MUST BE FILLED OUT AND MAILED WITH THE INVENTORY REPORT 1989

TABLE OF CONTENTS

SECTION		PAGE
1.0	OVERVIEW	1
2.0	INTRODUCTION	2
2.1	FACILITY LOCATION	3
2.2	FACILITY DESCRIPTION	3
3.0	EMISSIONS	4
3.1	EMISSION SOURCES	5
3.2	EMISSION QUANTIFICATION METHODS	19
3.2.1	BOILERS	19
3.2.2	JET ENGINE TEST CELLS	19
3.2.3	SPRAY BOOTHS	23
3.2.4	SPRAY GUNS	23
3.2.5	GASOLINE UNDERGROUND STORAGE TANKS	23
3.2.6	GASOLINE FUEL DISPENSERS	26
3.3	EMISSION CALCULATIONS	26

LIST OF APPENDICES

APPENDIX A - PLOT PLAN

APPENDIX B - COMPLETED ATEIR FORMS

APPENDIX C - COPIES OF THE MATERIAL SAFETY AND DATA SHEETS

APPENDIX D - COPY OF THE AIR TOXIC EMISSIONS INVENTORY PLAN

APPENDIX E - COPY OF THE SCAQMD APPROVAL LETTER

APPENDIX F - SAMPLE CALCULATIONS

LIST OF TABLES

TABLE		PAGE
1	LIST OF DEVICES AND PROCESS MATERIALS	6-9
2	LIST OF POLLUTANTS, EMISSION FACTORS, AND ... TOTAL EMISSIONS	10-17

LIST OF FIGURES

FIGURE	TITLE	PAGE
1	VICINITY MAP	4
2	PLOT PLAN	18
3	BOILERS WITH SINGLE STACK	20
4	BOILERS WITH COMMON STACK	21
5	JET ENGINE TEST CELL	22
6	SPRAY BOOTH	24
7	SPRAY GUN	25
8	JP-5 UNDERGROUND STORAGE TANK	28
9	DIESEL UNDERGROUND STORAGE TANK	29
10	GASOLINE UNDERGROUND STORAGE TANK	30
11	FUEL OIL #2 UNDERGROUND STORAGE TANK ...	31
12	DIESEL FUEL DISPENSER	32
13	GASOLINE DISPENSER	33
14	DEGREASER	34

AIR TOXIC EMISSIONS INVENTORY REPORT
MCAS EL TORO
SANTA ANA, CALIFORNIA

1.0 OVERVIEW

The Air Toxics "Hot Spots" Information and Assessment Act of 1987 requirements apply to any facility which manufactures, formulates, uses, or releases any listed substances or any other substance which reacts to form a listed substance, and which releases more than certain amounts of the criteria pollutants, or is listed in any existing toxics use or toxics air emission survey, inventory, or report released or compiled by a district. The Act requires that such facilities prepare and submit an emission inventory report in accordance with the approved plan to the appropriate air pollution control district or air quality management district. The intent of the Act is to collect site-specific information to ascertain the nature and quantities of emissions of over 300 air toxic substances throughout the state. The purpose of the inventory, according to the Technical Guidance Document to the Criteria and Guidelines Regulation for AB 2588 dated August 1989, by the California Air Resources Board, is to "develop health risk assessments for certain facilities that the district designates as having emissions which may result in adverse public impacts, and to make the health risk assessment information available to the public".

An Air Toxics Emission Inventory Plan was submitted to the South Coast Air Quality Management District (SCAQMD) for the Marine Corps Air Station, El Toro. The document has been approved by the district. Copies of the Plan and the approval letter are provided in Appendices D and E. This report has been prepared based on the plan and includes data regarding project description and operation, flow diagrams, identification of devices and specification of emissions and quantification methods.

2.0 INTRODUCTION

In accordance with the requirements of the California Air Toxic "Hot Spots" Information and Assessment Act of 1987 (AB 2588), this Air Toxic Emissions Inventory Report (ATEIR) has been prepared by Dames & Moore for the Marine Corps Air Station (MCAS), El Toro. This report identifies the air emissions of toxic substances from the MCAS El Toro facility that are included in the California Air Resources Board (CARB) lists of substances for which emissions must be quantified or reported (Appendix A of the AB 2588 guidelines). The ATEIR is based upon the Air Toxics Emissions Inventory Plan (ATEIP) that was previously submitted and approved in May 1990. The ATEIP identified a number of various devices that potentially produce air toxic contaminants. For the purposes of preparing the ATEIR, these devices have been studied for the types of material(s) that they process and the types and quantities of air emissions that they would generate. Completed ATEIR forms are provided in Appendix B.

The following personnel may be contacted for more information regarding this report:

- Marine Corps Air Station, El Toro
  Mr. Sam Lam
  Facilities Management Dept. (1JG)
  MCAS El Toro
  Santa Ana, California 92709-5001
  (714) 726-6607

- Dames & Moore
  Ms. Lida Moussavian
  Project Engineer
  6 Hutton Centre Drive, Suite 700
  Santa Ana, California 92707
  (714) 433-2000

2.1 FACILITY LOCATION

The Marine Corps Air Station (MCAS), El Toro is located within a non-residential area of central Orange County, California, off Trabuco Road and Sand Canyon Avenue. The station is about seven miles Southeast of MCAS Tustin and is bounded mostly by farm land. The location of the facility is shown in Figure 1.

2.2 FACILITY DESCRIPTION

MCAS El Toro is the major center for Marine aviation on the west coast. Commissioned as a fleet operational training facility for Marine Corps pilots, MCAS El Toro has grown to 4698 acres with 572 structures (not including housing), plus runways and parking aprons, roads, parking facilities, and utility systems. The site has a population of over 18,000, including dependents. At present, there are several hundred aircraft operated and maintained at the air station.

The facility operates several types of air polluting equipment. This equipment is generally for the purpose of providing services to facility operations and personnel.

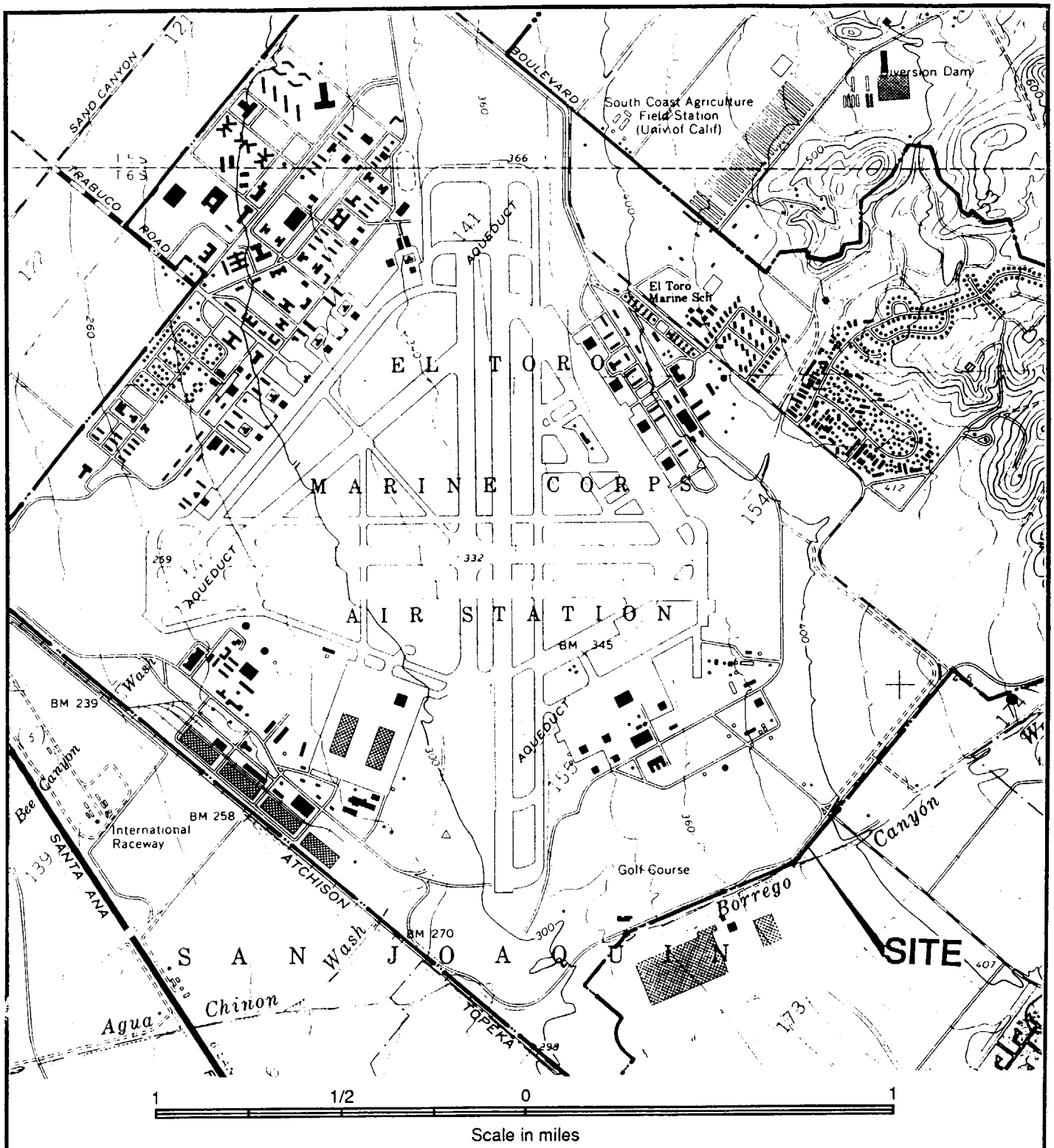

1 1/2 0 1

Scale in miles

N

VICINITY MAP

AIR TOXIC EMISSIONS INVENTORY REPORT
MARINE CORPS AIR STATION EL TORO
SANTA ANA, CALIFORNIA

For U.S. Navy/Marine Corps Air Station El Toro

REFERENCE: USGS 7.5 Minute Series Topographic Maps, "El Toro And Tustin, California" Quadrangles, Photorevised 1981.

Dames & Moore
FIGURE 1

3.0 EMISSIONS

3.1 EMISSION SOURCES

Air toxic emissions are expected from five types of operations at the facility. These sources of air toxic emissions are identified in the Plan and can be grouped into the following categories:

(1) Boilers,
(2) Jet aircraft engine test cells,
(3) Spray booths and spray guns,
(4) Fuel storage tanks and dispensers,
(5) Degreasers.

The inventoried emission sources are assigned device numbers, stack numbers, and vent numbers (if applicable) pursuant to the guideline requirements as well as the SCAQMD approval letter. Table 1 presents a list of the devices, South Coast Air Quality Management District (SCAQMD) permits, stacks, locations and the processed material. Some of these devices, as shown in the table, were not used in 1989 or do not emit any listed toxic air contaminants.

Figure 2 provided in Appendix A shows the locations of the devices, which are scattered over a large area within the base. For purposes of preparing this ATEIR and the required forms, equipment-specific information was collected to the extent possible and is shown in Tables (1) and (2). Table 2 summarizes the types of expected air toxic contaminants (listed in Appendix A of the Guideline), emission factors and emission quantities associated with each device.

TABLE 1

MCAS EL TORO
1989 AIR TOXIC EMISSION INVENTORY REPORT

DEVICE ID	PERMIT/ APPLICATION#	STACK ID	DEVICE TYPE	BUILDING	MATERIAL PROCESSED
70001	181342	90001	BOILER	57	NATURAL GAS
70002	D24054	90002	BOILER	94	NATURAL GAS
70003	D24055	90003	BOILER	296	NATURAL GAS
70004	D24056	90003	BOILER	296	NATURAL GAS
70005	D24057	90004	BOILER	297	NATURAL GAS
70006	D24058	90004	BOILER	297	NATURAL GAS
70007	181348	90005	BOILER	372	NATURAL GAS
70008	D24061	90006	BOILER	372	NATURAL GAS
70009	D24059	90007	BOILER	369	NATURAL GAS
70010	D24060	90008	BOILER	375	NATURAL GAS
70011	D24062	90009	BOILER	457	NATURAL GAS
70012	D24063	90010	BOILER	634	NATURAL GAS
70013	D24064	90011	BOILER	662	NATURAL GAS
70014	D24065	90012	BOILER	662	NATURAL GAS
70015	D24066	90013	BOILER	733	NATURAL GAS
70016	181357	90014	BOILER	733	NATURAL GAS
70017	181364	90015	BOILER	439	NATURAL GAS

TABLE 1 (CONTINUED)

70018	181365	90015	BOILER	439	NATURAL GAS
70019	S04416	90016	BOILER	364	NATURAL GAS
70020	S04417	90016	BOILER	364	NATURAL GAS
70021	S06008	90017	TEST CELL	447	JP-5
70022	M43096	90018	TEST CELL	658	JP-5
70023	M59110	80001	BOOTH *	296	PAINTS
70024	M59112	80002	BOOTH	392	PAINTS
70025	S05981	80003	BOOTH *	447	PAINTS
70026	S06562	80004	BOOTH	370	PAINTS
70027	S05982		SPRAY GUN *	1601	PAINTS
70028	S05983		SPRAY GUN *	1601	PAINTS
70029	S05984		SPRAY GUN	1601	PAINTS
70030	189483	80005	STORAGE TANK	547	JP-5
70031	189483	80006	STORAGE TANK	548	JP-5
70032	189483	80007	STORAGE TANK	549	JP-5
70033	189483	80008	STORAGE TANK	550	JP-5
70034	189483	80009	STORAGE TANK	551	JP-5
70035	189483	80010	STORAGE TANK *	553	JP-5
70036	189483	80011	STORAGE TANK *	554	JP-5
70037	189484	80012	STORAGE TANK	658A	JP-5
70038	189485	80013	STORAGE TANK	658B	JP-5
70039	189486	80014	STORAGE TANK	716A	JP-5

TABLE 1 (CONTINUED)

70040	189487	80015	STORAGE TANK	439A	FUEL OIL #2
70041	189488	80016	STORAGE TANK	439B	FUEL OIL #2
70042	189489	80017	STORAGE TANK *	364A	FUEL OIL #2
70043	189490	80018	STORAGE TANK *	364B	FUEL OIL #2
70044	189491	80019	STORAGE TANK	800A	GASOLINE
70045	189492	80020	STORAGE TANK	800B	DIESEL
70046	189493	80021	STORAGE TANK	800C	DIESEL
70047	189494	80022	STORAGE TANK *	98B	FUEL OIL #2
70048	189495	80023	STORAGE TANK	329	FUEL OIL #2
70049	189496	80024	STORAGE TANK	398	JP-5
70050	189497	80025	STORAGE TANK	448	JP-5
70051	S07348	80026	STORAGE TANK	204	JP-5
70052	S07348	80027	STORAGE TANK	205	JP-5
70053	S07348	80028	STORAGE TANK	206	GASOLINE
70054	S07348	80029	STORAGE TANK	207	GASOLINE
70055	M44504	80030	STORAGE TANK	209	JP-5
70056	M44504	80031	STORAGE TANK	211	JP-5
70057	M44504	80032	STORAGE TANK	213	JP-5
70058	M44504	80033	STORAGE TANK	215	JP-5
70059	M50840	80034	STORAGE TANK	196	JP-5
70060	M50840	80035	STORAGE TANK	197	JP-5
70061	M50840	80036	STORAGE TANK	198	JP-5

TABLE (CONTINUED)

70062	M50840	80037	STORAGE TANK	199	JP-5
70063	M50840	80038	STORAGE TANK	200	JP-5
70064	M50840	80039	STORAGE TANK	201	JP-5
70065	M50840	80040	STORAGE TANK	202	JP-5
70066	M50840	80041	STORAGE TANK	203	JP-5
70067	M83061		DISPENSER	298	GASOLINE
70068	903509		DISPENSER	651	GASOLINE
70069	903512		DISPENSER	637	GASOLINE
70070	M41244		DISPENSER	390	GASOLINE
70071	120123		DISPENSER	392	GASOLINE
70072	120124		DISPENSER *	388	DIESEL
70073	152583		DEGREASER	127	EMULSIFIER

* Device was not used in 1989.

TABLE 2

MCAS EL TORO
1989 AIR TOXIC EMISSIONS INVENTORY REPORT

DEVICE ID	POLLUTANT(1)(2)	CAS#	EMISSION FACTOR	EMISSION FACTOR UNITS	MAX HOURLY (LBS/HR)	ANNUAL AVG (LBS/YR)
70001	BENZENE	71432	9.10 E-2	LBS/MMSCF	3.81 E-4	1.23 E-1
70001	FORMALDEHYDE	50000	2.15 E-1	LBS/MMSCF	9.00 E-4	2.90 E-1
70001	TOLUENE	108883	4.60 E-2	LBS/MMSCF	1.92 E-4	6.20 E-2
70002	BENZENE	71432	9.10 E-2	LBS/MMSCF	2.03 E-4	1.53 E-1
70002	FORMALDEHYDE	50000	2.15 E-1	LBS/MMSCF	4.80 E-4	3.61 E-1
70002	TOLUENE	108883	4.60 E-2	LBS/MMSCF	1.03 E-4	7.70 E-2
70003	BENZENE	71432	9.10 E-2	LBS/MMSCF	3.87 E-4	9.83 E-2
70003	FORMALDEHYDE	50000	2.15 E-1	LBS/MMSCF	9.14 E-4	2.32 E-1
70003	TOLUENE	108883	4.60 E-2	LBS/MMSCF	1.96 E-4	4.97 E-2
70004	BENZENE	71432	9.10 E-2	LBS/MMSCF	3.87 E-4	9.83 E-2
70004	FORMALDEHYDE	50000	2.15 E-1	LBS/MMSCF	9.14 E-4	2.32 E-1
70004	TOLUENE	108883	4.60 E-2	LBS/MMSCF	1.96 E-4	4.97 E-2
70005	BENZENE	71432	9.10 E-2	LBS/MMSCF	3.87 E-4	9.83 E-2
70005	FORMALDEHYDE	50000	2.15 E-1	LBS/MMSCF	9.14 E-4	2.32 E-1
70005	TOLUENE	108883	4.60 E-2	LBS/MMSCF	1.96 E-4	4.97 E-2
70006	BENZENE	71432	9.10 E-2	LBS/MMSCF	3.87 E-4	9.83 E-2
70006	FORMALDEHYDE	50000	2.15 E-1	LBS/MMSCF	9.14 E-4	2.32 E-1

TABLE 2 (CONTINUED)

70006	TOLUENE	108883	4.60 E-2	LBS/MMSCF	1.96 E-4	4.97 E-2
70007	BENZENE	71432	9.10 E-2	LBS/MMSCF	1.91 E-4	5.14 E-2
70007	FORMALDEHYDE	50000	2.15 E-1	LBS/MMSCF	4.52 E-4	1.21 E-1
70007	TOLUENE	108883	4.60 E-2	LBS/MMSCF	9.66 E-4	2.60 E-2
70008	BENZENE	71432	9.10 E-2	LBS/MMSCF	1.91 E-4	5.14 E-2
70008	FORMALDEHYDE	50000	2.15 E-1	LBS/MMSCF	4.52 E-4	1.21 E-1
70008	TOLUENE	108883	4.60 E-2	LBS/MMSCF	9.66 E-4	2.60 E-2
70009	BENZENE	71432	9.10 E-2	LBS/MMSCF	2.28 E-4	6.00 E-2
70009	FORMALDEHYDE	50000	2.15 E-1	LBS/MMSCF	5.83 E-4	1.42 E-1
70009	TOLUENE	108883	4.60 E-2	LBS/MMSCF	1.15 E-4	3.03 E-2
70010	BENZENE	71432	9.10 E-2	LBS/MMSCF	2.96 E-4	1.64 E-2
70010	FORMALDEHYDE	50000	2.15 E-1	LBS/MMSCF	6.99 E-4	3.87 E-2
70010	TOLUENE	108883	4.60 E-2	LBS/MMSCF	1.50 E-4	8.28 E-3
70011	BENZENE	71432	9.10 E-2	LBS/MMSCF	1.82 E-4	4.91 E-2
70011	FORMALDEHYDE	50000	2.15 E-1	LBS/MMSCF	4.30 E-4	1.16 E-1
70011	TOLUENE	108883	4.60 E-2	LBS/MMSCF	9.20 E-4	2.58 E-3
70012	BENZENE	71432	9.10 E-2	LBS/MMSCF	2.28 E-4	6.29 E-3
70012	FORMALDEHYDE	50000	2.15 E-1	LBS/MMSCF	5.83 E-4	1.49 E-1
70012	TOLUENE	108883	4.60 E-2	LBS/MMSCF	1.15 E-4	3.18 E-2
70013	BENZENE	71432	9.10 E-2	LBS/MMSCF	2.64 E-4	6.88 E-2
70013	FORMALDEHYDE	50000	2.15 E-1	LBS/MMSCF	6.24 E-4	1.63 E-1
70013	TOLUENE	108883	4.60 E-2	LBS/MMSCF	1.33 E-4	3.48 E-2

TABLE 2 (CONTINUED)

70014	BENZENE	71432	9.10 E-2	LBS/MMSCF	2.64 E-4	6.88 E-2
70014	FORMALDEHYDE	50000	2.15 E-1	LBS/MMSCF	6.24 E-4	1.63 E-1
70014	TOLUENE	108883	4.60 E-2	LBS/MMSCF	1.33 E-4	3.48 E-2
70015	BENZENE	71432	9.10 E-2	LBS/MMSCF	4.10 E-4	1.08 E-1
70015	FORMALDEHYDE	50000	2.15 E-1	LBS/MMSCF	9.68 E-4	2.55 E-1
70015	TOLUENE	108883	4.60 E-2	LBS/MMSCF	2.07 E-4	5.46 E-2
70016	BENZENE	71432	9.10 E-2	LBS/MMSCF	4.10 E-4	1.08 E-1
70016	FORMALDEHYDE	50000	2.15 E-1	LBS/MMSCF	9.68 E-4	2.55 E-1
70016	TOLUENE	108883	4.60 E-2	LBS/MMSCF	2.07 E-4	5.46 E-2
70017	BENZENE	71432	9.10 E-2	LBS/MMSCF	2.13 E-4	1.97 E-1
70017	FORMALDEHYDE	50000	2.15 E-1	LBS/MMSCF	5.03 E-4	4.64 E-1
70017	TOLUENE	108883	4.60 E-2	LBS/MMSCF	1.08 E-4	9.94 E-2
70018	BENZENE	71432	9.10 E-2	LBS/MMSCF	2.13 E-4	1.97 E-1
70018	FORMALDEHYDE	50000	2.15 E-1	LBS/MMSCF	5.03 E-4	4.64 E-1
70018	TOLUENE	108883	4.60 E-2	LBS/MMSCF	1.08 E-4	9.94 E-2
70019	BENZENE	71432	9.10 E-2	LBS/MMSCF	6.01 E-4	5.30 E-2
70019	FORMALDEHYDE	50000	2.15 E-1	LBS/MMSCF	1.42 E-4	1.25 E-1
70019	TOLUENE	108883	4.60 E-2	LBS/MMSCF	3.04 E-4	2.68 E-2
70020	BENZENE	71432	9.10 E-2	LBS/MMSCF	6.01 E-4	5.30 E-2
70020	FORMALDEHYDE	50000	2.15 E-1	LBS/MMSCF	1.42 E-4	1.25 E-1
70020	TOLUENE	108883	4.60 E-2	LBS/MMSCF	3.04 E-4	2.68 E-2
70021	ARSENIC	7440382	6.30 E-2	LBS/1000 GAL	2.68 E-1	1.55 E-1

TABLE 2 (CONTINUED)

70021	BENZENE	71432	2.60 E-1	LBS/1000 GAL	1.11	6.39
70021	CADMIUM	7440439	6.00 E-3	LBS/1000 GAL	2.56-2	14.7 E-2
70021	CHROMIUM VI	18540299	6.30 E-2	LBS/1000 GAL	2.68-1	1.55
70021	LEAD	7439921	6.50 E-2	LBS/1000 GAL	2.77-1	1.60
70021	NICKEL	7440020	6.00 E-3	LBS/1000 GAL	2.56 E-2	1.47 E-1
70021	XYLENES	1210	5.72	LBS/1000 GAL	24.4	1.47 E-1
70021	SELENIUM	7782492	6.00 E-3	LBS/1000 GAL	2.56 E-2	14.7 E-2
70021	ZINC	7440666	6.50 E-2	LBS/1000 GAL	2.77 E-1	1.60
70022	ARSENIC	7440382	6.30 E-2	LBS/1000 GAL	2.68 E-1	1.65 E+1
70022	BENZENE	71432	2.60 E-1	LBS/1000 GAL	1.11	6.84 E+1
70022	CADMIUM	7440439	6.00 E-3	LBS/1000 GAL	2.56 E-1	1.57
70022	CHROMIUM VI	18540299	6.30 E-2	LBS/1000 GAL	2.68 E-1	1.65 E+1
70022	LEAD	7439921	6.50 E-2	LBS/1000 GAL	2.77 E-1	1.71 E+1
70022	NICKEL	7440020	6.00 E-3	LBS/1000 GAL	2.56 E-2	1.57
70022	XYLENES	1210	5.72	LBS/1000 GAL	2.44 E+1	1.50 E+3
70022	SELENIUM	7782492	6.00 E-3	LBS/1000 GAL	2.56 E-1	1.57 E-1
70022	ZINC	7440666	6.50 E-2	LBS/1000 GAL	2.77 E-1	1.71 E+1
70024	AMMONIA	7664417	1.00 E-3	LBS/GAL	1.00 E-1	5.00 E-1
70024	XYLENES	1210	3.80 E-1	LBS/GAL	3.80 E-1	1.90 E+1
70026	AMMONIA	7664417	1.00 E-3	LBS/GAL	1.00 E-3	5.00 E-1
70026	XYLENES	1210	3.80 E-1	LBS/GAL	3.80 E-1	1.90 E+1
70026	TOLUENE	108883	8.40 E-1	LBS/GAL	5.30 E-2	5.57

TABLE 2 (CONTINUED)

70029	LEAD SULFOCHROMATE	1344372	1.006	LBS/GAL	1.00 E-1	5.03
70029	TOLUENE	108883	2.18 E-1	LBS/GAL	1.09 E-1	1.09 E+1
70030	**********	******	*********	**********	**********	********
70031	**********	******	*********	**********	**********	********
70032	**********	******	*********	**********	**********	********
70033	**********	******	*********	**********	**********	********
70034	**********	******	*********	**********	**********	********
70035	**********	******	*********	**********	**********	********
70036	**********	******	*********	**********	**********	********
70037	**********	******	*********	**********	**********	********
70038	**********	******	*********	**********	**********	********
70039	**********	******	*********	**********	**********	********
70040	**********	******	*********	**********	**********	********
70041	**********	******	*********	**********	**********	********
70042	**********	******	*********	**********	**********	********
70043	**********	******	*********	**********	**********	********
70044	BENZENE	71432	5.81 E-2	LBS/1000 GAL	4.97 E-4	1.03
70044	XYLENES	1210	0.00	LBS/1000 GAL	0.00	0.00
70044	TOLUENE	108883	5.00 E-2	LBS/1000 GAL	4.20 E-4	8.70 E-1
70045	**********	******	*********	**********	**********	********
70046	**********	******	*********	**********	**********	********
70047	**********	******	*********	**********	**********	********

TABLE 2 (CONTINUED)

70048	**********	******	*********	**********	**********	********
70049	**********	******	*********	**********	**********	********
70050	**********	******	*********	**********	**********	********
70051	**********	******	*********	**********	**********	********
70052	**********	******	*********	**********	**********	********
70053	BENZENE	71432	5.81 E-2	LBS/1000 GAL	4.00 E-4	8.30 E-1
70053	XYLENES	1210	0.00	LBS/1000 GAL	0.00	0.00
70053	TOLUENE	108883	5.00 E-2	LBS/1000 GAL	3.37 E-4	7.00 E-1
70054	BENZENE	71432	5.81 E-2	LBS/1000 GAL	9.73 E-5	2.00 E-1
70054	XYLENES	1210	0.00	LBS/1000 GAL	0.00	0.00
70054	TOLUENE	108883	5.00 E-2	LBS/1000 GAL	8.38 E-5	1.70 E-1
70055	**********	******	*********	**********	**********	********
70056	**********	******	*********	**********	**********	********
70057	**********	******	*********	**********	**********	********
70058	**********	******	*********	**********	**********	********
70059	**********	******	*********	**********	**********	********
70060	**********	******	*********	**********	**********	********
70061	**********	******	*********	**********	**********	********
70062	**********	******	*********	**********	**********	********
70063	**********	******	*********	**********	**********	********
70064	**********	******	*********	**********	**********	********
70065	**********	******	*********	**********	**********	********

TABLE 2 (TINUED)

70066	**********	******	*********	**********	**********	********
70067	BENZENE (VAPOR)	71432	7.70 E-2	LBS/1000 GAL	4.69 E-4	1.37
70067	XYLENES (VAPOR)	1210	0.00	LBS/1000 GAL	0.00	0.00
70067	TOLUENE (VAPOR)	108883	6.60 E-2	LBS/1000 GAL	4.02 E-4	1.17
70067	BENZENE (LIQUID)	71432	4.90 E-3	LBS/1000 GAL	1.19 E-4	3.5 E-1
70067	XYLENES (LIQUID)	1210	0.00	LBS/1000 GAL	0.00	0.00
70067	TOLUENE (LIQUID)	108883	4.20 E-3	LBS/1000 GAL	1.02 E-4	3.00 E-1
70068	BENZENE (VAPOR)	71432	7.70 E-2	LBS/1000 GAL	3.29 E-3	8.40
70068	XYLENES (VAPOR)	1210	0.00	LBS/1000 GAL	0.00	0.00
70068	TOLUENE (VAPOR)	108883	6.60 E-2	LBS/1000 GAL	2.82 E-3	7.20
70068	BENZENE (LIQUID)	71432	4.90 E-3	LBS/1000 GAL	8.38 E-4	2.14
70068	XYLENES (LIQUID)	1210	0.00	LBS/1000 GAL	0.00	0.00
70068	TOLUENE (LIQUID)	108883	4.20 E-3	LBS/1000 GAL	7.18 E-4	1.83
70069	BENZENE (VAPOR)	71432	7.70 E-2	LBS/1000 GAL	8.05 E-4	4.54
70069	XYLENES (VAPOR)	1210	0.00	LBS/1000 GAL	0.00	0.00
70069	TOLUENE (VAPOR)	108883	6.60 E-2	LBS/1000 GAL	6.90 E-4	3.89
70069	BENZENE (LIQUID)	71432	4.90 E-3	LBS/1000 GAL	2.05 E-4	1.16
70069	XYLENES (LIQUID)	1210	0.00	LBS/1000 GAL	0.00	0.00
70069	TOLUENE (LIQUID)	108883	4.20 E-3	LBS/1000 GAL	1.76 E-4	9.90 E-1
70070	BENZENE (VAPOR)	71432	7.70 E-2	LBS/1000 GAL	5.16 E-5	1.50 E-1
70070	XYLENES (VAPOR)	1210	0.00	LBS/1000 GAL	0.00	0.00
70070	TOLUENE (VAPOR)	108883	6.60 E-2	LBS/1000 GAL	4.42 E-5	1.29 E-1

TABLE . CONTINUED)

70070	BENZENE (LIQUID)	71432	4.90 E-3	LBS/1000 GAL	1.31 E-5	3.82 E-2
70070	XYLENES (LIQUID)	1210	0.00	LBS/1000 GAL	0.00	0.00
70070	TOLUENE (LIQUID)	108883	4.20 E-3	LBS/1000 GAL	1.13 E-5	3.28 E-2
70071	BENZENE (VAPOR)	71432	7.70 E-2	LBS/1000 GAL	5.16 E-5	1.50 E-1
70071	XYLENES (VAPOR)	1210	0.00	LBS/1000 GAL	0.00	0.00
70071	TOLUENE (VAPOR)	108883	6.60 E-2	LBS/1000 GAL	4.42 E-5	1.29 E-1
70071	BENZENE (LIQUID)	71432	4.90 E-3	LBS/1000 GAL	1.31 E-5	3.82 E-2
70071	XYLENES (LIQUID)	1210	0.00	LBS/1000 GAL	0.00	0.00
70071	TOLUENE (LIQUID)	108883	4.20 E-3	LBS/1000 GAL	1.13 E-5	3.28 E-2
70073	**********	******	*********	**********	**********	********

(1) Emissions are based on emission factors and speciation profiles provided in CARB Appendix III and Speciation Manual.

(2) Devices denoted with * indicate that no AB2588 Air Toxics were emitted.

PLEASE REFER TO APPENDIX A

PLOT PLAN

AIR TOXIC EMISSIONS INVENTORY REPORT
MARINE CORPS AIR STATION EL TORO
SANTA ANA, CALIFORNIA
For U.S. Navy/Marine Corps Air Station El Toro

Dames & Moore
Figure 2

3.2 EMISSION QUANTIFICATION METHOD

The 1989 air toxic emissions and their CAS numbers from the emission sources included in the plan are presented in Table 2. Emissions were quantified utilizing the California Air Resources Board (CARB) published emission factors as well as material balances. This approach, though different from the method proposed in the plan, has been identified as an approved method.

3.2.1 BOILERS

Air emissions are generated by the combustion of fuel in the boiler. Most of these air contaminants are criteria pollutants. The expected air toxic pollutants listed in the Guidelines are benzene, formaldehyde and toluene. Emission factors for these pollutants are obtained from the "CARB Source Classification Codes and EPA/NEDS Emission Factors", and "CARB Speciation Manual". The maximum hourly emission rates and annual average emission rates are estimated based on the fuel use data and emission factors. A sample calculation for boilers is shown in Appendix F. Representative flow diagrams are provided in Figures 3 and 4.

3.2.2 JET ENGINE TEST CELL

The toxic air emissions from jet engine test cells are expected to be arsenic, benzene, cadmium, chromium, lead, nickel, selenium, xylenes, and zinc. All these pollutants are included in the list of substances that need to be quantified. The emissions are estimated from the factors provided in "CARB Source Classification Codes and EPA/NEDS Emission Factor", and "CARB Speciation Manual" as well as the fuel use data for 1989. A sample calculation is shown in Appendix F. A representative flow diagram is provided in Figure 5.

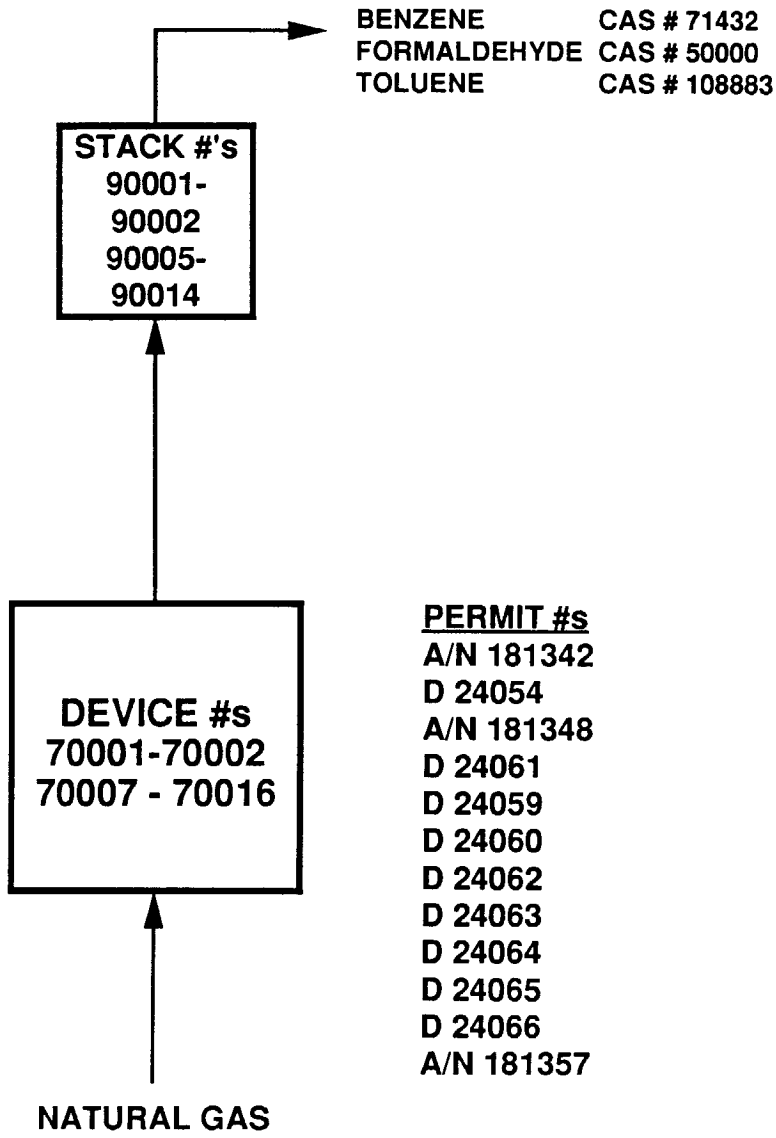

BOILERS WITH SINGLE STACK

AIR TOXIC EMISSIONS INVENTORY REPORT
MARINE CORPS AIR STATION EL TORO
SANTA ANA, CALIFORNIA

For U.S. Navy/ Marine Corps Air Station El Toro

Dames & Moore
FIGURE 3

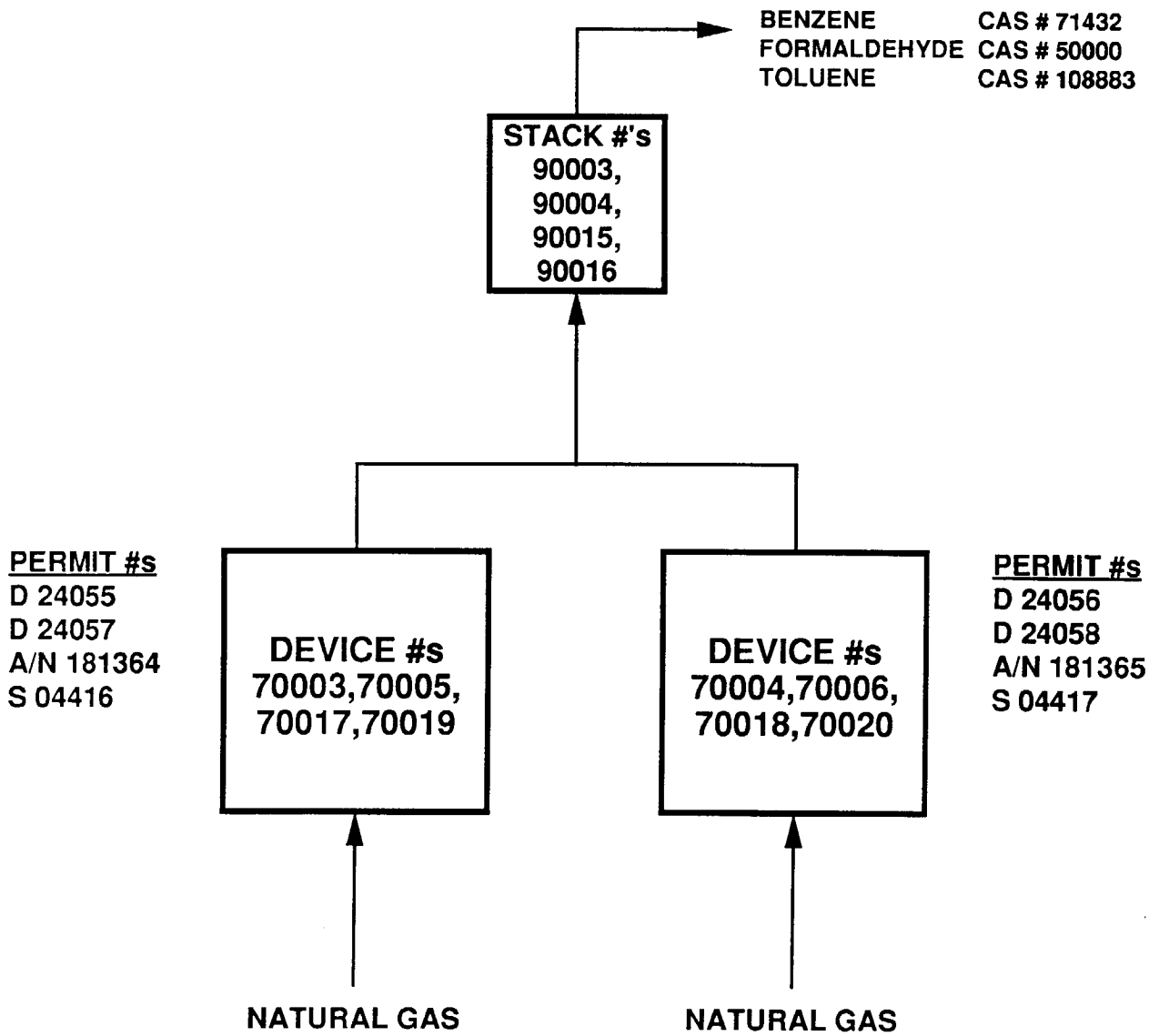

BOILERS WITH COMMON STACK

AIR TOXIC EMISSIONS INVENTORY REPORT
MARINE CORPS AIR STATION EL TORO
SANTA ANA, CALIFORNIA

For U.S. Navy/ Marine Corps Air Station El Toro

Dames & Moore
FIGURE 4

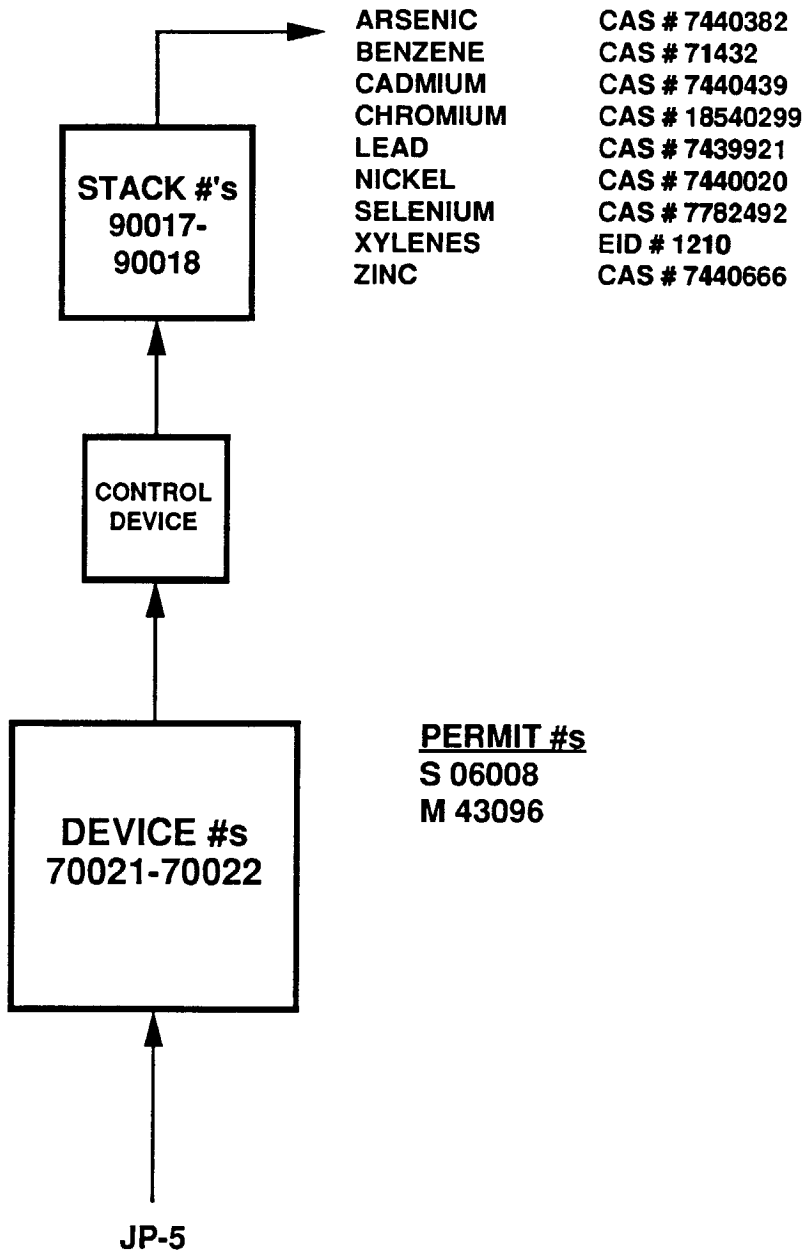

JET ENGINE TEST CELL

AIR TOXIC EMISSIONS INVENTORY REPORT
MARINE CORPS AIR STATION EL TORO
SANTA ANA, CALIFORNIA

For U.S. Navy/ Marine Corps Air Station El Toro

Dames & Moore
FIGURE 5

3.2.3 SPRAY BOOTHS

The emissions from spray booths depend on the types of materials used in the spray operations. The toxic air contaminants listed in Appendix A of the Guidelines are identified from the available Material Safety Data Sheets. The emission factors are estimated from the specific gravity and the weight fraction of the toxic air contaminant in the spray material. The maximum hourly and annual average emission rates are then estimated based on the hourly and average annual material usages and emission factors. For solid particulate emissions, the amount of overspray and the filter efficiency are considered in the emission calculations. The emissions of organic compounds, however, are not affected by the filter efficiency or the amount of overspray. Sample calculations are shown in Appendix F. Representative flow diagrams are provided in Figure 6.

3.2.4 SPRAY GUNS

Spray gun toxic air emissions are generally calculated in the same way as those for the spray booths. The emission factors are estimated from the data provided in the Material Safety Data Sheets (Appendix C) for the pollutants that are included in Appendix A of the Guidelines. Emissions are then calculated from the material usage data and an estimated overspray factor (for solid particulate matter). A sample calculation is shown in Appendix F and flow diagrams are provided in Figure 7.

3.2.5 UNDERGROUND STORAGE TANKS

The ATEIP identifies 34 underground storage tanks containing JP-5 fuel. These tanks do not generate any listed air toxic substances per CARB document. The toxic air contaminants that are expected to be emitted from gasoline underground storage tanks are benzene, xylenes, and toluene.

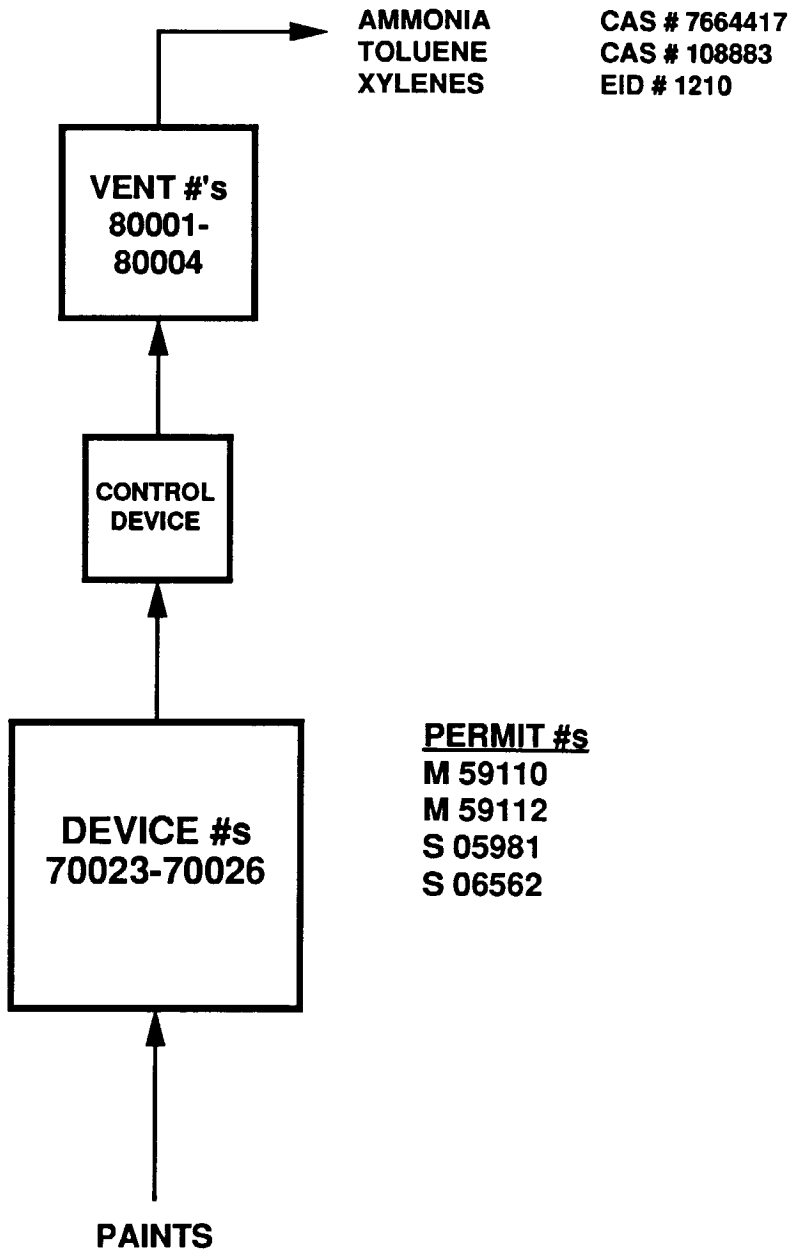

SPRAY BOOTH

AIR TOXIC EMISSIONS INVENTORY REPORT
MARINE CORPS AIR STATION EL TORO
SANTA ANA, CALIFORNIA

For U.S. Navy/ Marine Corps Air Station El Toro

Dames & Moore
FIGURE 6

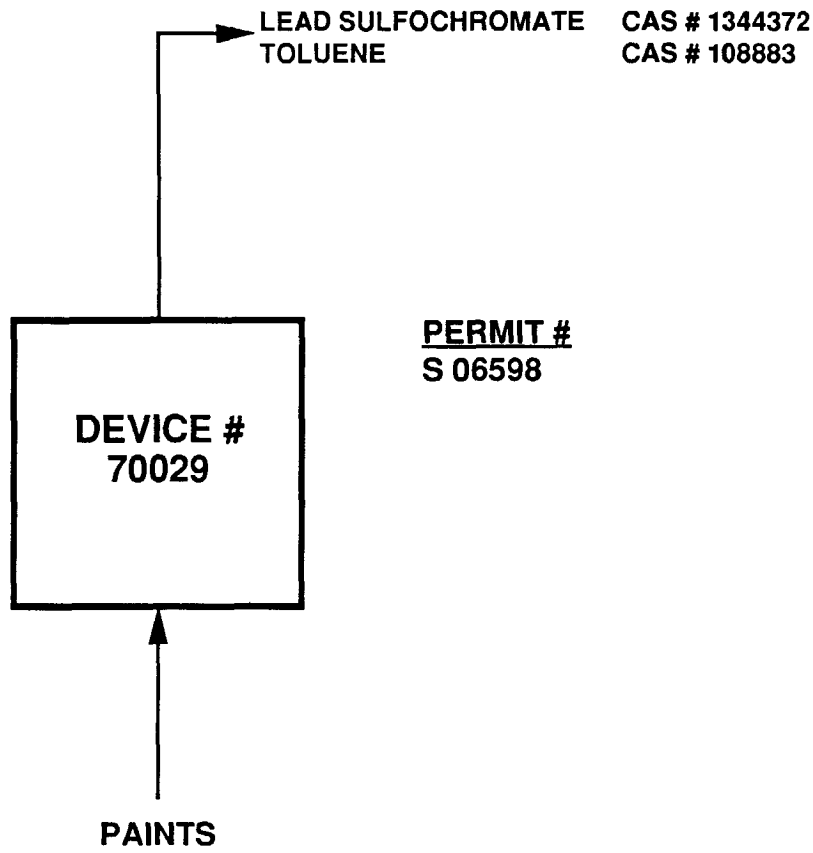

SPRAY GUN

AIR TOXIC EMISSIONS INVENTORY REPORT
MARINE CORPS AIR STATION EL TORO
SANTA ANA, CALIFORNIA

For U.S. Navy/ Marine Corps Air Station El Toro

Dames & Moore
FIGURE 7

These emissions result from working losses and breathing losses. The "CARB Source Classification Codes and EPA/NEDS Emission Factors", and "CARB Speciation Manual" provide emission factors associated with the working and breathing losses for each of the above-mentioned air contaminants. These factors, along with the material usage data and an efficiency factor associated with the vapor recovery system, have been used to estimate the maximum hourly and annual average emissions. A sample calculation is provided in Appendix F and representative flow diagrams are shown in Figure 8, 9, 10 and 11.

3.2.6 FUEL DISPENSERS

Fuel dispensers air toxic emissions result from working losses and spillage. CARB AB 2588 Appendix A identifies benzene, toluene and xylenes as potential toxic air contaminants expected to be emitted from gasoline fuel dispensers. "CARB Source Classification Codes and EPA/NEDS Emission Factors", and "CARB Speciation Manual" provide emission factors for these pollutants. A sample emission calculation is shown in Appendix F and a representative flow diagrams are provided in Figure 12, 13 and 14.

3.3 EMISSION CALCULATIONS

Sample emission calculations are provided in Appendix F. Material usages for fuels and sprayed materials are used to estimate emissions. Emission factors, as identified in Table 2, are used in the following two general equations to estimate the maximum hourly and annual average emissions:

$$E1 = Q1 \times EF$$

$$E2 = Q2 \times EF$$

where,

E1 = Maximum Daily Emissions

E2 = Annual Average Emissions

Q1 = Maximum Daily Material Use

Q2 = Annual Average Material Use

EF = Emission Factor

For the devices where emission factors were not readily available the Material Safety Data Sheets (Appendix C) were used to provide air emission factor estimates. In many cases, as indicated by footnotes on the tables, the devices included in the plan were not operated or did not exist during the year 1989. Inoperative or currently nonexistent devices are indicated as such in Table 1.

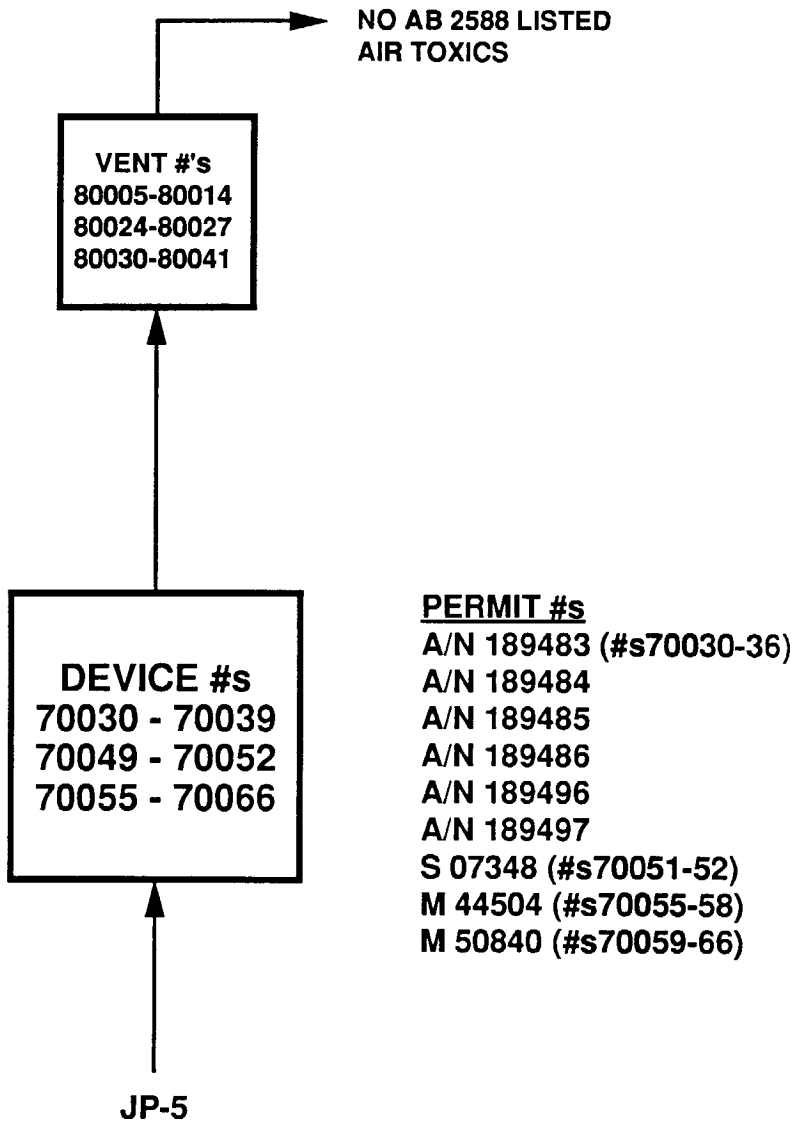

JP-5 UNDERGROUND STORAGE TANK

AIR TOXIC EMISSIONS INVENTORY REPORT
MARINE CORPS AIR STATION EL TORO
SANTA ANA, CALIFORNIA

For U.S. Navy/ Marine Corps Air Station El Toro

Dames & Moore
FIGURE 8

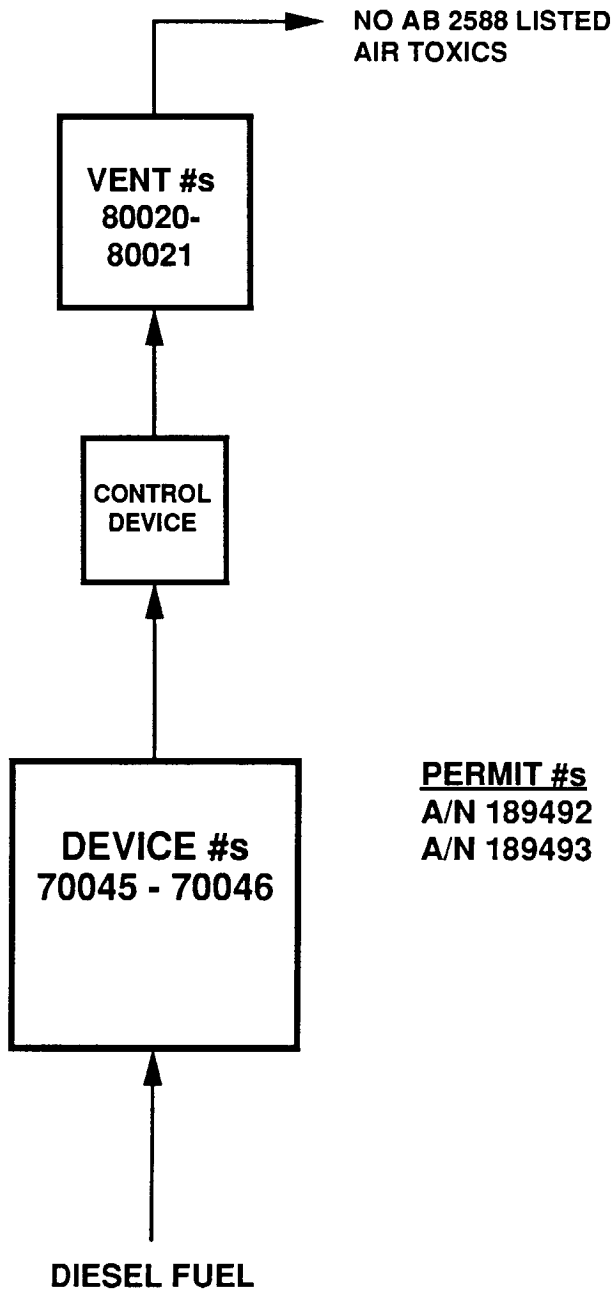

DIESEL UNDERGROUND STORAGE TANK

AIR TOXIC EMISSIONS INVENTORY REPORT
MARINE CORPS AIR STATION EL TORO
SANTA ANA, CALIFORNIA

For U.S. Navy/ Marine Corps Air Station El Toro

Dames & Moore
FIGURE 9

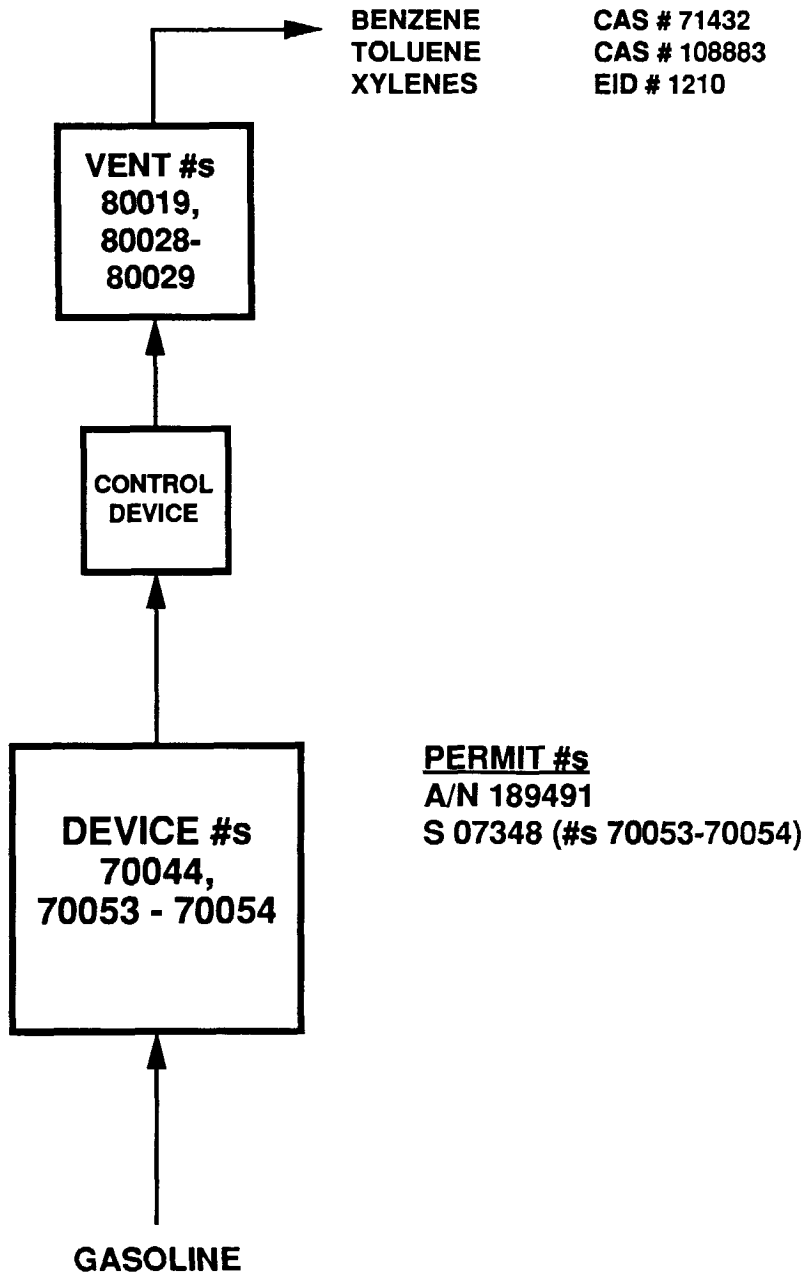

GASOLINE UNDERGROUND STORAGE TANK

AIR TOXIC EMISSIONS INVENTORY REPORT
MARINE CORPS AIR STATION EL TORO
SANTA ANA, CALIFORNIA

For U.S. Navy/ Marine Corps Air Station El Toro

Dames & Moore
FIGURE 10

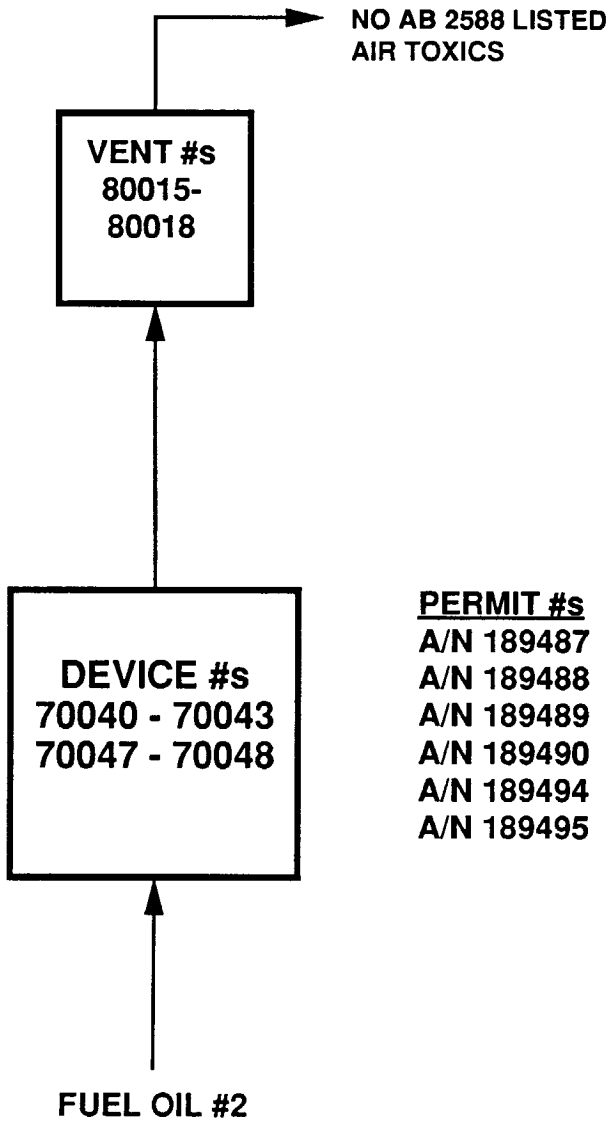

FUEL OIL #2 UNDERGROUND STORAGE TANK

AIR TOXIC EMISSIONS INVENTORY REPORT
MARINE CORPS AIR STATION EL TORO
SANTA ANA, CALIFORNIA

For U.S. Navy/ Marine Corps Air Station El Toro

Dames & Moore
FIGURE 11

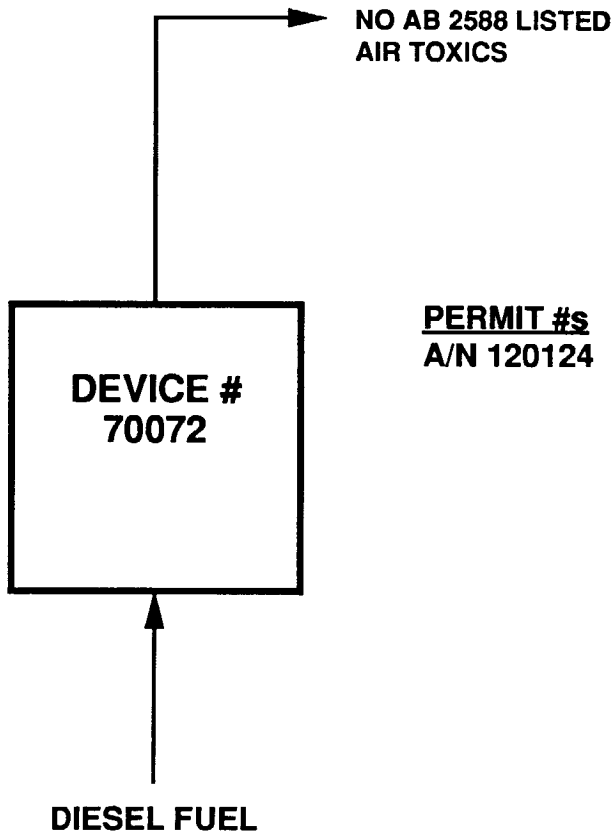

FUEL DISPENSER

AIR TOXIC EMISSIONS INVENTORY REPORT
MARINE CORPS AIR STATION EL TORO
SANTA ANA, CALIFORNIA

For U.S. Navy/ Marine Corps Air Station El Toro

Dames & Moore
FIGURE 12

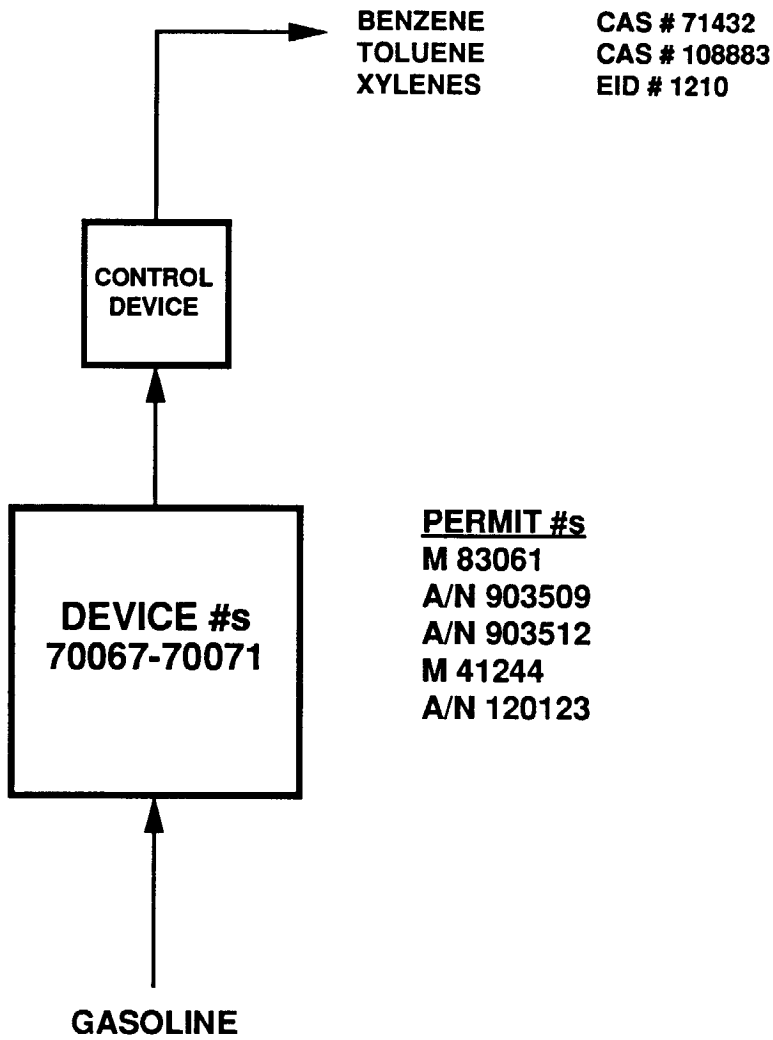

FUEL DISPENSER

AIR TOXIC EMISSIONS INVENTORY REPORT
MARINE CORPS AIR STATION EL TORO
SANTA ANA, CALIFORNIA

For U.S. Navy/ Marine Corps Air Station El Toro

Dames & Moore
FIGURE 13

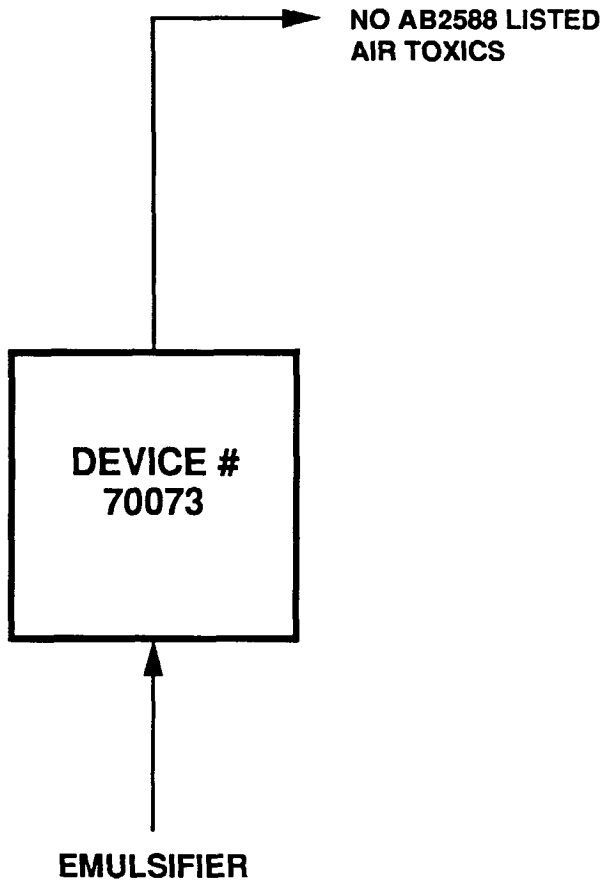

DEGREASER

AIR TOXIC EMISSIONS INVENTORY REPORT
MARINE CORPS AIR STATION EL TORO
SANTA ANA, CALIFORNIA

For U.S. Navy/ Marine Corps Air Station El Toro

Dames & Moore
FIGURE 14

APPENDIX A
PLOT PLAN

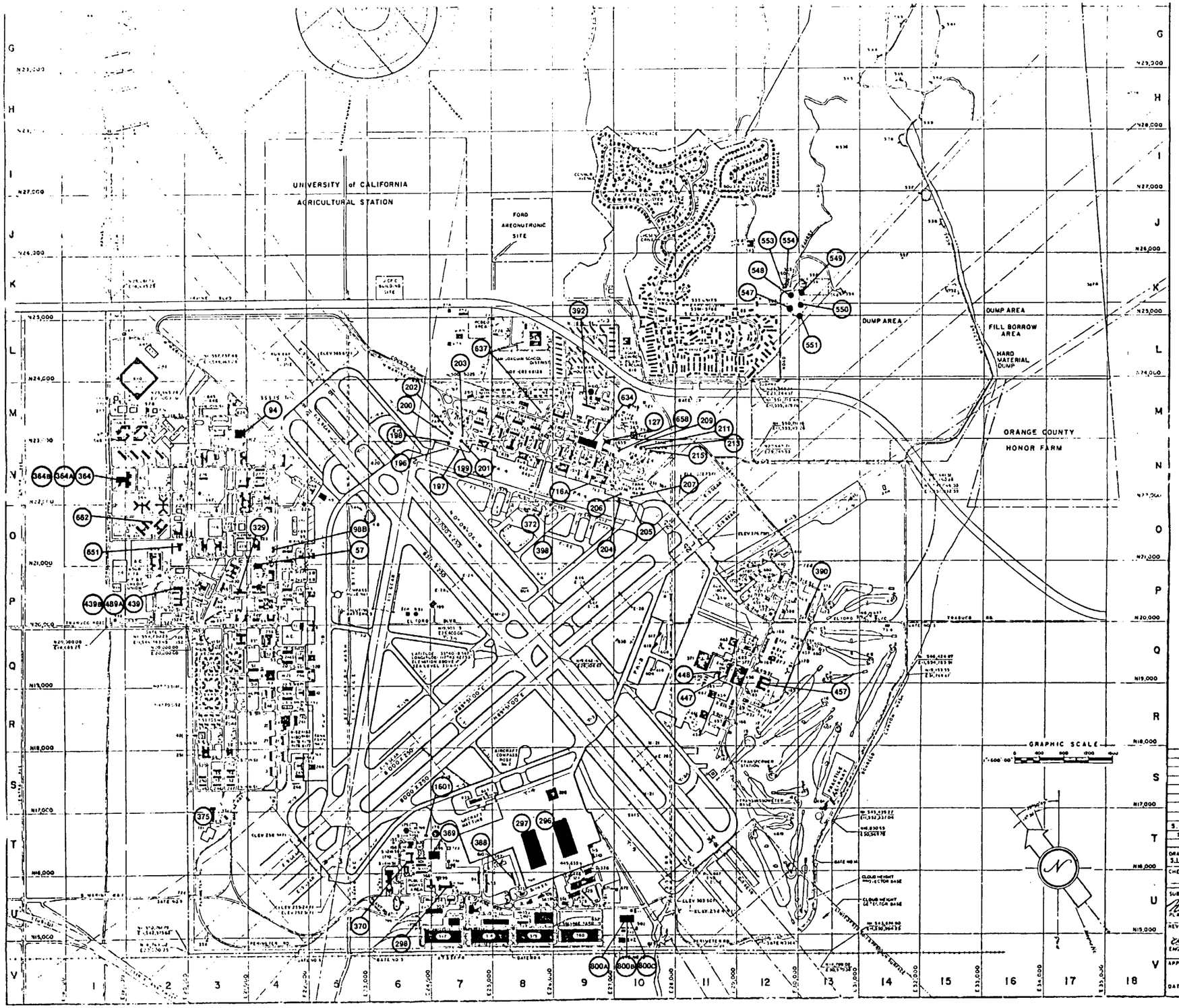

LEGEND

DEVICE I.D.	STACK/VENT I.D.	DEVICE	BUILDING
70001	90001	BOILER	67
70002	90002	BOILER	94
70003	90003	BOILER	294
70004	90003	BOILER	296
70005	90004	BOILER	297
70006	90004	BOILER	297
70007	90005	BOILER	372
70008	90006	BOILER	372
70009	90007	BOILER	349
70010	90008	BOILER	375
70011	90009	BOILER	457
70012	90010	BOILER	634
70013	90011	BOILER	662
70014	90012	BOILER	662
70015	90013	BOILER	733
70016	90014	BOILER	733
70017	90015	BOILER	439
70018	90015	BOILER	439
70019	90016	BOILER	364
70020	90016	BOILER	364
70021	90017	TEST CELL	447
70022	90018	TEST CELL	658
70023	80001	BOOTH *	296
70024	80002	BOOTH	392
70025	80003	BOOTH *	447
70026	80004	BOOTH	370
70027	-	SPRAY GUN *	1601
70028	-	SPRAY GUN *	1601
70029	-	SPRAY GUN	1601
70030	80006	STORAGE TANK	547
70031	80006	STORAGE TANK	548
70032	80007	STORAGE TANK	549
70033	80008	STORAGE TANK	550
70034	80009	STORAGE TANK	551
70035	80010	STORAGE TANK *	553
70036	80011	STORAGE TANK *	554
70037	80012	STORAGE TANK	658A
70038	80013	STORAGE TANK	658B
70039	80014	STORAGE TANK	716A
70040	80015	STORAGE TANK	439A
70041	80016	STORAGE TANK	439B
70042	80017	STORAGE TANK *	364A
70043	80018	STORAGE TANK *	364B
70044	80019	STORAGE TANK	800A
70045	80020	STORAGE TANK	800B
70046	80021	STORAGE TANK	800C
70047	80022	STORAGE TANK *	98B
70048	80023	STORAGE TANK	329
70049	80024	STORAGE TANK	398
70050	80025	STORAGE TANK	448
70051	80026	STORAGE TANK	204
70052	80027	STORAGE TANK	205
70053	80028	STORAGE TANK	206
70054	80029	STORAGE TANK	207
70055	80030	STORAGE TANK	209
70056	80031	STORAGE TANK	211
70057	80032	STORAGE TANK	213
70058	80033	STORAGE TANK	215
70059	80034	STORAGE TANK	196
70060	80035	STORAGE TANK	197
70061	80036	STORAGE TANK	198
70062	80037	STORAGE TANK	199
70063	80038	STORAGE TANK	200
70064	80039	STORAGE TANK	201
70065	80040	STORAGE TANK	202
70066	80041	STORAGE TANK	203
70067	-	DISPENSER	298
70068	-	DISPENSER	651
70069	-	DISPENSER	637
70070	-	DISPENSER	390
70071	-	DISPENSER	392
70072	-	DISPENSER *	388
70073	-	DEGREASER	127

* Device Was Reported In ATEI Plan, But Not In Operation In 1989

PLOT PLAN

AIR TOXIC EMISSIONS INVENTORY REPORT
MARINE CORPS AIR STATION EL TORO
SANTA ANA, CALIFORNIA
For U.S. Navy/Marine Corps Air Station El Toro

SYMBOL	DESCRIPTION	DATE	APPROVAL
	REVISED	(MAR 93)	
S.I.M.B.A.	REPRODUCED & MODIFIED	MAR. '73	

REVISIONS

DRAWN BY S.L. McYERSON, P.E.
CHECKED BY
SUBMITTED 27 Feb '73 — PLANNING BRANCH
REVIEWED — ENGINEERING DIRECTOR
APPROVED: CEC-USN-PWD
DATE 27 FEB 1973

— DEPARTMENT OF THE NAVY —
U.S. MARINE CORPS AIR STATION
EL TORO SANTA ANA CALIFORNIA

STATION MAP

SCALE 1" = 600'0"
SHEET 1 OF 1
P.W. DRAWING No. S-2010

FOR OFFICIAL USE ONLY

Dames & Moore

APPENDIX B
COMPLETED ATEIR FORMS

EMISSION YEAR 19 89

AIR TOXICS EMISSION DATA SYSTEM REVIEW & UPDATE REPORT
FACILITY DESCRIPTION

FORM **FAC**

FACILITY DATA

COMPANY NAME: MARINE CORPS AIR STATION EL TORO

ADDRESS: FACILITIES MANAGEMENT DEPT (1JG)

CITY: SANTA ANA CA

ZIP CODE: 92709-5001

CONTACT PERSON: MR. SAM LAM

TELEPHONE: 714-726-6607

FACILITY SIC: 971

NUMBER OF EMPLOYEES:

MAILING ADDRESS DATA

COMPANY NAME: MARINE CORPS AIR STATION EL TORO

ADDRESS: FACILITIES MANAGEMENT DEPT. (1JG)

CITY: SANTA ANA

STATE: CA

ZIP CODE: 92709_5001

ATTENTION: MR. SAM LAM

FOR OFFICE USE ONLY

COUNTY ID:

FACILITY ID:

ACTION CODE:

DISTRICT:

AIR BASIN CODE:

CITY CODE (OPTIONAL)

AQCR (OPTIONAL)

SUBCOUNTY ID

FACD1 (OPTIONAL)

FACD2 (OPTIONAL)

UTM ZONE

UTM EAST

UTM NORTH

ARB/FAC 080289

NAME: Lida Moussavian

DATE: NOV 09 1990

FACILITY EMISSION SUMMARY FORM

COMPANY MARINE CORPS AIR STATION EL TORO	AQMD FACILITY ID # 006281

APPENDIX A-I SUBSTANCES		FACILITYWIDE EMISSIONS		OPERATING SCHEDULE	
AIR TOXIC NAME	CAS NO.	MAX LBS / HR	AVG LBS / YR	HRS / DAY	DAYS / YR
AMMONIA	7664417	2.00 E-03	1.00	8	365
ARSENIC	7440382	5.36 E-01	1.81 E+01	8	365
BENZENE	71432	2.23 E-01	9.70 E+01	10	365
CADMIUM	7440439	5.12 E-02	1.72	8	365
CHROMIUM	18540299	5.36 E-01	1.88 E+01	8	260
FORMALDEHYDE	50000	1.27 E-02	4.28	10	365
LEAD	7439921	5.54 E-01	1.87 E+01	8	260
LEAD SULFOCHROMATE	1344372	1.00 E-01	5.10	8	260
NICKEL	7440020	5.12 E-02	1.72	8	365
SELENIUM	7782492	5.12 E-02	1.72	8	365
TOLUENE	108883	1.69 E-01	3.48 E+01	10	365
XYLENES	1210	4.96 E+01	1.68 E+03	8	260
ZINC	7440666	5.54 E-01	1.87 E +01	8	365

THE INVENTORY SHOULD BE FOR THE PERIOD JAN 1, 1989 THRU DEC 31 1989.

THIS FORM MUST BE FILLED OUT AND SUBMITTED WITH THE REPORT

THIS FORM MAY BE DUPLICATED AS NECESSARY

AB 2588 ATIR 89

NOV 09 1990

B-2

EMISSION YEAR 19 89

AIR TOXICS EMISSION DATA SYSTEM REVIEW & UPDATE REPORT
DEVICE DESCRIPTION AND DEVICE-STACK RELATIONS

FORM **DEV**

FOR OFFICE USE ONLY

COUNTY ID:

FACILITY ID

CFC USE

***** OFFICE USE ONLY *****
**** EACH ITEM IS OPTIONAL ***

ACTION CODE	DEVICE ID	DEVICE NAME	NBR OF DEV.	STACK ID	PERMIT ID (IF AVAILABLE)	DEVD1	DEVD2	DEVICE GROUP
	70001	BOILER	1	90001	A/N 181342			
	70002	BOILER	1	90002	D24054			
	70003	BOILER	1	90003	D24055			
	70004	BOILER	1	90003	D24056			
	70005	BOILER	1	90004	D24057			
	70006	BOILER	1	90004	D24058			

NAME Lida Moussavian

DATE NOV 09 1990

ARB/DEV 240389

EMISSION YEAR 19 89

AIR TOXICS EMISSION DATA SYSTEM REVIEW & UPDATE REPORT
DEVICE DESCRIPTION AND DEVICE-STACK RELATIONS

FORM **DEV**

FOR OFFICE USE ONLY

COUNTY ID:

FACILITY ID

CFC USE

***** OFFICE USE ONLY *****
*** EACH ITEM IS OPTIONAL ***

ACTION CODE	DEVICE ID	DEVICE NAME	NBR OF DEV.	STACK ID	PERMIT ID (IF AVAILABLE)	DEVD1	DEVD2	DEVICE GROUP
	70007	BOILER	1	90005	A/N 181348			
	70008	BOILER	1	90006	D24061			
	70009	BOILER	1	90007	D24059			
	70010	BOILER	1	90008	D24060			
	70011	BOILER	1	90009	D24062			
	70012	BOILER	1	90010	D24063			

NAME Lida Moussavian DATE NOV 0 9 1990

ARB/DEV 240389

EMISSION YEAR 1989

AIR TOXICS EMISSION DATA SYSTEM REVIEW & UPDATE REPORT
DEVICE DESCRIPTION AND DEVICE-STACK RELATIONS

FORM **DEV**

FOR OFFICE USE ONLY

COUNTY ID:

FACILITY ID:

CFC USE

***** OFFICE USE ONLY *****
**** EACH ITEM IS OPTIONAL ***

ACTION CODE	DEVICE ID	DEVICE NAME	NBR OF DEV.	DEVD1	DEVICE GROUP	STACK ID	PERMIT ID (IF AVAILABLE)	DEVD2
	70013	BOILER	1			90011	D24064	
	70014	BOILER	1			90012	D24065	
	70015	BOILER	1			90013	D24066	
	70016	BOILER	1			90014	A/N 181357	
	70017	BOILER	1			90015	A/N 181364	
	70018	BOILER	1			90015	A/N 181365	

NAME Lida Moussavian

DATE NOV 09 1990

ARB/DEV 240389

EMISSION YEAR 1989

AIR TOXICS EMISSION DATA SYSTEM REVIEW & UPDATE REPORT
DEVICE DESCRIPTION AND DEVICE-STACK RELATIONS

FORM **DEV**

FOR OFFICE USE ONLY

COUNTY ID:

FACILITY ID

OFC USE

***** OFFICE USE ONLY *****
**** EACH ITEM IS OPTIONAL ***

ACTION CODE	DEVICE ID	DEVICE NAME	NBR OF DEV.	STACK ID	PERMIT ID (IF AVAILABLE)	DEVD1	DEVD2	DEVICE GROUP
	70019	BOILER	1	90016	S04416			
	70020	BOILER	1	90016	S04417			
	70021	JET ENGINE TEST CELL	1	90017	S06008			
	70022	JET ENGINE TEST CELL	1	90018	M43096			
	70023 **	SPRAY BOOTH	1	80001	M59110			
	70024	SPRAY BOOTH	1	80002	M59112			

NAME Lida Moussavian DATE NOV 09 1990

ARB/DEV 240389

** These devices were not in operation in 1989.

EMISSION YEAR 1989

AIR TOXICS EMISSION DATA SYSTEM REVIEW & UPDATE REPORT
DEVICE DESCRIPTION AND DEVICE-STACK RELATIONS

FORM **DEV**

FOR OFFICE USE ONLY

COUNTY ID:

FACILITY ID

CFC USE

Delete - plan incorrect

***** OFFICE USE ONLY *****
*** EACH ITEM IS OPTIONAL ***

ACTION CODE	DEVICE ID	DEVICE NAME	NBR OF DEV.	STACK ID	PERMIT ID (IF AVAILABLE)	DEVD1	DEVD2	DEVICE GROUP
	70025	SPRAY BOOTH	1	80003	S05981			
	70026	SPRAY BOOTH	1	80004	S06562			
	70027 *	SPRAY GUN	1		S05982			
	70028 *	SPRAY GUN	1		S05983			
	70029	SPRAY GUN	1		S05984			
	70030	STORAGE TANK	1	80005	A/N 189483			

ARB/DEV 240389

NAME Lida Moussavian DATE NOV 09 1990

* These devices have been removed from operation.

EMISSION YEAR 19 89

AIR TOXICS EMISSION DATA SYSTEM REVIEW & UPDATE REPORT
DEVICE DESCRIPTION AND DEVICE-STACK RELATIONS

FORM **DEV**

FOR OFFICE USE ONLY

COUNTY ID:

FACILITY ID

OFC USE

***** OFFICE USE ONLY *****
**** EACH ITEM IS OPTIONAL ***

ACTION CODE	DEVICE ID	DEVICE NAME	NBR OF DEV.	STACK ID	PERMIT ID (IF AVAILABLE)	DEVD1	DEVD2	DEVICE GROUP
	70031	STORAGE TANK	1	80006	A/N 189483			
	70032	STORAGE TANK	1	80007	A/N 189483			
	70033	STORAGE TANK	1	80008	A/N 189483			
	70034	STORAGE TANK	1	80009	A/N 189483			
	70035 **	STORAGE TANK	1	80010	A/N 189483			
	70036 **	STORAGE TANK	1	80011	A/N 189483			

NAME Lida Moussavian DATE 7 0 9 1990

ARB/DEV 240389

** These devices were not in operation in 1989.

EMISSION YEAR 19 89

AIR TOXICS EMISSION DATA SYSTEM REVIEW & UPDATE REPORT
DEVICE DESCRIPTION AND DEVICE-STACK RELATIONS

FORM **DEV**

FOR OFFICE USE ONLY

COUNTY ID:

FACILITY ID

OFC USE

***** OFFICE USE ONLY *****
**** EACH ITEM IS OPTIONAL ***

ACTION CODE	DEVICE ID	DEVICE NAME	NBR OF DEV.	STACK ID	PERMIT ID (IF AVAILABLE)	DEVD1	DEVD2	DEVICE GROUP
	70037	STORAGE TANK	1	80012	A/N 189484			
	70038	STORAGE TANK	1	80013	A/N 189485			
	70039	STORAGE TANK	1	80014	A/N 181486			
	70040	STORAGE TANK	1	80015	A/N 181487			
	70041	STORAGE TANK	1	80016	A/N 181488			
	70042 **	STORAGE TANK	1	80017	A/N 181489			

NAME Lida Moussavian DATE NOV 09 1990

ARB/DEV 240389

** These devices were not in operation in 1989.

EMISSION YEAR 1989

AIR TOXICS EMISSION DATA SYSTEM REVIEW & UPDATE REPORT
DEVICE DESCRIPTION AND DEVICE-STACK RELATIONS

FORM **DEV**

FOR OFFICE USE ONLY

COUNTY ID:

FACILITY ID

OFFICE USE

***** OFFICE USE ONLY *****
**** EACH ITEM IS OPTIONAL ***

ACTION CODE	DEVICE ID	DEVICE NAME	NBR OF DEV.	STACK ID	PERMIT ID (IF AVAILABLE)	DEVD1	DEVD2	DEVICE GROUP
	70043**	STORAGE TANK	1	80018	A/N 189490			
	70044	STORAGE TANK	1	80019	A/N 189491			
	70045	STORAGE TANK	1	80020	A/N 189492			
	70046	STORAGE TANK	1	80021	A/N 189493			
	70047**	FUEL DISPENSER	1	80022	A/N 189494			
	70048	FUEL DISPENSER	1	80023	A/N 189495			

NAME Lida Moussavian DATE NOV 09 1990

ARB/DEV 240389

** These devices were not in operation in 1989.

EMISSION YEAR 9 89

AIR TOXICS EMISSION DATA SYSTEM REVIEW & UPDATE REPORT
DEVICE DESCRIPTION AND DEVICE-STACK RELATIONS

FORM **DEV**

FOR OFFICE USE ONLY

COUNTY ID:

FACILITY ID

CFC USE

***** OFFICE USE ONLY *****
**** EACH ITEM IS OPTIONAL ***

ACTION CODE	DEVICE ID	DEVICE NAME	NBR OF DEV.	STACK ID	PERMIT ID (IF AVAILABLE)	DEVD1	DEVD2	DEVICE GROUP
	70049	STORAGE TANK	1	80024	A/N 189496			
	70050	STORAGE TANK	1	80025	A/N 189497			
	70051	STORAGE TANK	1	80026	S07348			
	70052	STORAGE TANK	1	80027	S07348			
	70053	STORAGE TANK	1	80028	S07348			
	70054	STORAGE TANK	1	80029	S07348			

AAB/DEV 240389

NAME Lida Moussavian

DATE NOV 09 1990

EMISSION YEAR 1989

AIR TOXICS EMISSION DATA SYSTEM REVIEW & UPDATE REPORT
DEVICE DESCRIPTION AND DEVICE-STACK RELATIONS

FORM **DEV**

FOR OFFICE USE ONLY

COUNTY ID:

FACILITY ID

CFC USE

***** OFFICE USE ONLY *****
**** EACH ITEM IS OPTIONAL ***

ACTION CODE	DEVICE ID	DEVICE NAME	NBR OF DEV.	STACK ID	PERMIT ID (IF AVAILABLE)	DEVD1	DEVD2	DEVICE GROUP
	70055	STORAGE TANK	1	80030	M44504			
	70056	STORAGE TANK	1	80031	M44504			
	70057	STORAGE TANK	1	80032	M44504			
	70058	STORAGE TANK	1	80033	M44504			
	70059	STORAGE TANK	1	80034	M50840			
	70060	STORAGE TANK	1	80035	M50840			

NAME Lida Moussavian DATE NOV 09 1990

ARB/DEV 240389

EMISSION YEAR 19 89

AIR TOXICS EMISSION DATA SYSTEM REVIEW & UPDATE REPORT
DEVICE DESCRIPTION AND DEVICE-STACK RELATIONS

FORM **DEV**

FOR OFFICE USE ONLY

COUNTY ID:

FACILITY ID

OFC USE

***** OFFICE USE ONLY *****
**** EACH ITEM IS OPTIONAL ***

ACTION CODE	DEVICE ID	DEVICE NAME	NBR OF DEV.	STACK ID	PERMIT ID (IF AVAILABLE)	DEVD1	DEVD2	DEVICE GROUP
	70061	STORAGE TANK	1	80036	M50840			
	70062	STORAGE TANK	1	80037	M50840			
	70063	STORAGE TANK	1	80038	M50840			
	70064	STORAGE TANK	1	80039	M50840			
	70065	STORAGE TANK	1	80040	M50840			
	70066	STORAGE TANK	1	80041	M50840			

NAME Lida Moussavian DATE NOV 09 1990

ARB/DEV 240389

EMISSION YEAR 1989

AIR TOXICS EMISSION DATA SYSTEM REVIEW & UPDATE REPORT
DEVICE DESCRIPTION AND DEVICE-STACK RELATIONS

FORM **DEV**

FOR OFFICE USE ONLY

COUNTY ID:

FACILITY ID

CPC USE

***** OFFICE USE ONLY *****
**** EACH ITEM IS OPTIONAL ***

ACTION CODE	DEVICE ID	DEVICE NAME	NBR OF DEV.	STACK ID	PERMIT ID (IF AVAILABLE)	DEVD1	DEVD2	DEVICE GROUP
	70067	FUEL DISPENSER	1		M83061			
	70068	FUEL DISPENSER	1		A/N 903509			
	70069	FUEL DISPENSER	1		A/N 903512			
	70070	FUEL DISPENSER	1		M41244			
	70071	FUEL DISPENSER	1		A/N 120123			
	70072**	FUEL DISPENSER	1		A/N 120124			

NAME Lida Moussavian DATE NOV 09 1990

ARB/DEV 240389

** These devices were not in operation in 1989.

EMISSION YEAR 1989

AIR TOXICS EMISSION DATA SYSTEM REVIEW & UPDATE REPORT
DEVICE DESCRIPTION AND DEVICE-STACK RELATIONS

FORM **DEV**

FOR OFFICE USE ONLY

COUNTY ID:

FACILITY ID

OFFICE USE

***** OFFICE USE ONLY *****
**** EACH ITEM IS OPTIONAL ***

ACTION CODE	DEVICE ID	DEVICE NAME	NBR OF DEV.	DEVD1	DEVICE GROUP	STACK ID	PERMIT ID (IF AVAILABLE)	DEVD2
	70073	DEGREASER	1				A/N 152583	

NAME Lida Moussavian DATE NOV 09 1990

ARB/DEV 240389

EMISSION YEAR 19 89	AIR TOXICS EMISSION DATA SYSTEM REVIEW & UPDATE REPORT STACK DATA	FORM STK

FOR OFFICE USE ONLY COUNTY ID: FACILITY ID:

DO NOT DELETE STACK IF IT SERVES OTHER DEVICES. SEE INSTRUCTIONS

DESC CODE	STACK/VENT CATEGORY	REQUIRED INFORMATION
	AMBIENT TEMP & LOW-VELOCITY EXHAUST (T W/IN 25 F OF AMBIENT & V LT 750 FPM)	
1	RELEASE POINT(RP) AT GROUND-LEVEL	STACK ID & CODE ONLY
2	RELEASE FROM BLDG HVAC ONLY	STACK ID, CODE, & STACK HEIGHT
3	RP W/IN (2.5 X HB) ABOVE GROUND AND W/IN (5 X HB) SIDEWAYS TO NEAREST BLDG	STACK ID, CODE & STACK HEIGHT
4	OTHER STACK/VENT (LOW T,V)	STACK ID, CODE & STACK HEIGHT
	OTHER TEMP & FLOW CONDITIONS	
5	RP W/IN (2.5 X HB) ABOVE GROUND AND W/IN (5 X HB) SIDEWAYS TO NEAREST BLDG	ALL STACK INFORMATION
6	OTHER STACK/VENT (OTHER T,V)	ALL STACK INFORMATION

WHERE HB = HEIGHT OF NEAREST BUILDING AND HVAC = HEATING, VENTILATING AND AIR CONDITIONING

OFC USE

********* EXHAUST *********

ACTION CODE	STACK ID	DESC CODE	HEIGHT ABOVE GROUND (FEET)	DIAMETER (FEET)	GAS TEMP (F)	GAS FLOW RATE (CFM)	GAS VELOCITY (FPM)	*OFC USE ONLY* UTM EAST (KILOMETER)	UTM NORTH (KILOMETER)
	90001	6	15*	1*					
	90002	6	40*	2*					
	90003	6	20*	2*					
	90004	6	40*	1.7*					

NAME Lida Moussavian DATE NOV 09 1990

ARB STK.890322

* These represent the estimated values. There are no source test reports.

EMISSION YEAR 1989

AIR TOXICS EMISSION DATA SYSTEM REVIEW & UPDATE REPORT
STACK DATA

FORM **STK**

FOR OFFICE USE ONLY COUNTY ID: FACILITY ID:

DO NOT DELETE STACK IF IT SERVES OTHER DEVICES. SEE INSTRUCTIONS

DESC CODE	STACK/VENT CATEGORY	REQUIRED INFORMATION
	AMBIENT TEMP & LOW-VELOCITY EXHAUST (T W/IN 25 F OF AMBIENT & V LT 750 FPM)	
1	RELEASE POINT(RP) AT GROUND-LEVEL	STACK ID & CODE ONLY
2	RELEASE FROM BLDG HVAC ONLY	STACK ID. CODE. & STACK HEIGHT
3	RP W/IN (2.5 X HB) ABOVE GROUND AND W/IN (5 X HB) SIDEWAYS TO NEAREST BLDG	STACK ID. CODE & STACK HEIGHT
4	OTHER STACK/VENT (LOW T.V)	STACK ID. CODE & STACK HEIGHT
	OTHER TEMP & FLOW CONDITIONS	
5	RP W/IN (2.5 X HB) ABOVE GROUND AND W/IN (5 X HB) SIDEWAYS TO NEAREST BLDG	ALL STACK INFORMATION
6	OTHER STACK/VENT (OTHER T.V)	ALL STACK INFORMATION

WHERE HB = HEIGHT OF NEAREST BUILDING AND HVAC = HEATING, VENTILATING AND AIR CONDITIONING

OFC USE

ACTION CODE	STACK ID	DESC CODE	HEIGHT ABOVE GROUND (FEET)	DIAMETER (FEET)	EXHAUST GAS TEMP (F)	GAS FLOW RATE (CFM)	GAS VELOCITY (FPM)	*OFC USE ONLY* UTM EAST (KILOMETER)	UTM NORTH (KILOMETER)
	90005	6	20*	1.7*					
ACTION CODE	STACK ID	DESC CODE	HEIGHT ABOVE GROUND (FEET)	DIAMETER (FEET)	GAS TEMP (F)	GAS FLOW RATE (CFM)	GAS VELOCITY (FPM)	UTM EAST (KILOMETER)	UTM NORTH (KILOMETER)
	90006	6	50*	1*					
ACTION CODE	STACK ID	DESC CODE	HEIGHT ABOVE GROUND (FEET)	DIAMETER (FEET)	GAS TEMP (F)	GAS FLOW RATE (CFM)	GAS VELOCITY (FPM)	UTM EAST (KILOMETER)	UTM NORTH (KILOMETER)
	90007	6	30*	1.3*					
ACTION CODE	STACK ID	DESC CODE	HEIGHT ABOVE GROUND (FEET)	DIAMETER (FEET)	GAS TEMP (F)	GAS FLOW RATE (CFM)	GAS VELOCITY (FPM)	UTM EAST (KILOMETER)	UTM NORTH (KILOMETER)
	90008	6	20*	1*					

NAME Lida Moussavian DATE NOV 09 1990

ARB-STK-890323

* These represent the estimated values. There are no source test reports.

EMISSION YEAR 19 89	AIR TOXICS EMISSION DATA SYSTEM REVIEW & UPDATE REPORT STACK DATA	FORM **STK**

FOR OFFICE USE ONLY COUNTY ID: FACILITY ID:

DO NOT DELETE STACK IF IT SERVES OTHER DEVICES. SEE INSTRUCTIONS

DESC CODE	STACK/VENT CATEGORY	REQUIRED INFORMATION
	AMBIENT TEMP & LOW-VELOCITY EXHAUST (T W/IN 25 F OF AMBIENT & V LT 750 FPM)	
1	RELEASE POINT(RP) AT GROUND-LEVEL	STACK ID & CODE ONLY
2	RELEASE FROM BLDG HVAC ONLY	STACK ID, CODE, & STACK HEIGHT
3	RP W/IN (2.5 X HB) ABOVE GROUND AND W/IN (5 X HB) SIDEWAYS TO NEAREST BLDG	STACK ID, CODE & STACK HEIGHT
4	OTHER STACK/VENT (LOW T,V)	STACK ID, CODE & STACK HEIGHT
	OTHER TEMP & FLOW CONDITIONS	
5	RP W/IN (2.5 X HB) ABOVE GROUND AND W/IN (5 X HB) SIDEWAYS TO NEAREST BLDG	ALL STACK INFORMATION
6	OTHER STACK/VENT (OTHER T,V)	ALL STACK INFORMATION

WHERE HB = HEIGHT OF NEAREST BUILDING AND HVAC = HEATING, VENTILATING AND AIR CONDITIONING

OFC USE

********* EXHAUST *********

OFC USE ONLY

ACTION CODE	STACK ID	DESC CODE	HEIGHT ABOVE GROUND (FEET)	DIAMETER (FEET)	GAS TEMP (F)	GAS FLOW RATE (CFM)	GAS VELOCITY (FPM)	UTM EAST (KILOMETER)	UTM NORTH (KILOMETER)
	90009	6	20*	1*					
	90010	6	30*	1.7*					
	90011	6	20*	1.7*					
	90012	6	20*	1.7*					

NAME Lida Moussavian DATE NOV 09 1990

ARB/STK/890323

* These represent the estimated values. There are no source test reports.

EMISSION YEAR 19 89	AIR TOXICS EMISSION DATA SYSTEM REVIEW & UPDATE REPORT STACK DATA	FORM STK

FOR OFFICE USE ONLY COUNTY ID: FACILITY ID:

DO NOT DELETE STACK IF IT SERVES OTHER DEVICES. SEE INSTRUCTIONS

DESC CODE	STACK/VENT CATEGORY	REQUIRED INFORMATION
	AMBIENT TEMP & LOW-VELOCITY EXHAUST (T W/IN 25 F OF AMBIENT & V LT 750 FPM)	
1	RELEASE POINT(RP) AT GROUND-LEVEL	STACK ID & CODE ONLY
2	RELEASE FROM BLDG HVAC ONLY	STACK ID. CODE. & STACK HEIGHT
3	RP W/IN (2.5 X HB) ABOVE GROUND AND W/IN (5 X HB) SIDEWAYS TO NEAREST BLDG	STACK ID. CODE & STACK HEIGHT
4	OTHER STACK/VENT (LOW T.V)	STACK ID. CODE & STACK HEIGHT
	OTHER TEMP & FLOW CONDITIONS	
5	RP W/IN (2.5 X HB) ABOVE GROUND AND W/IN (5 X HB) SIDEWAYS TO NEAREST BLDG	ALL STACK INFORMATION
6	OTHER STACK/VENT (OTHER T.V)	ALL STACK INFORMATION

WHERE HB = HEIGHT OF NEAREST BUILDING AND HVAC = HEATING, VENTILATING AND AIR CONDITIONING

OFC USE

********* EXHAUST *********

ACTION CODE	STACK ID	DESC CODE	HEIGHT ABOVE GROUND (FEET)	DIAMETER (FEET)	GAS TEMP (F)	GAS FLOW RATE (CFM)	GAS VELOCITY (FPM)	*OFC USE ONLY* UTM EAST (KILOMETER)	UTM NORTH (KILOMETER)
	90013	6	20*	1.7*					
ACTION CODE	STACK ID	DESC CODE	HEIGHT ABOVE GROUND (FEET)	DIAMETER (FEET)	GAS TEMP (F)	GAS FLOW RATE (CFM)	GAS VELOCITY (FPM)	UTM EAST (KILOMETER)	UTM NORTH (KILOMETER)
	90014	6	40*	2.5*					
ACTION CODE	STACK ID	DESC CODE	HEIGHT ABOVE GROUND (FEET)	DIAMETER (FEET)	GAS TEMP (F)	GAS FLOW RATE (CFM)	GAS VELOCITY (FPM)	UTM EAST (KILOMETER)	UTM NORTH (KILOMETER)
	90015	6	40*	1.5*					
ACTION CODE	STACK ID	DESC CODE	HEIGHT ABOVE GROUND (FEET)	DIAMETER (FEET)	GAS TEMP (F)	GAS FLOW RATE (CFM)	GAS VELOCITY (FPM)	UTM EAST (KILOMETER)	UTM NORTH (KILOMETER)
	90016	6	40*	1.5*					

NAME Lida Moussavian DATE NOV 09 1990

ARB/STK/890323

* These represent the estimated values. There are no source test reports.

EMISSION YEAR 19 89	AIR TOXICS EMISSION DATA SYSTEM REVIEW & UPDATE REPORT STACK DATA	FORM STK

FOR OFFICE USE ONLY COUNTY ID: FACILITY ID:

DO NOT DELETE STACK IF IT SERVES OTHER DEVICES. SEE INSTRUCTIONS

DESC CODE	STACK/VENT CATEGORY	REQUIRED INFORMATION
	AMBIENT TEMP & LOW-VELOCITY EXHAUST (T W/IN 25 F OF AMBIENT & V LT 750 FPM)	
1	RELEASE POINT(RP) AT GROUND-LEVEL	STACK ID & CODE ONLY
2	RELEASE FROM BLDG HVAC ONLY	STACK ID, CODE, & STACK HEIGHT
3	RP W/IN (2.5 X HB) ABOVE GROUND AND W/IN (5 X HB) SIDEWAYS TO NEAREST BLDG	STACK ID, CODE & STACK HEIGHT
4	OTHER STACK/VENT (LOW T,V)	STACK ID, CODE & STACK HEIGHT
	OTHER TEMP & FLOW CONDITIONS	
5	RP W/IN (2.5 X HB) ABOVE GROUND AND W/IN (5 X HB) SIDEWAYS TO NEAREST BLDG	ALL STACK INFORMATION
6	OTHER STACK/VENT (OTHER T,V)	ALL STACK INFORMATION

WHERE HB = HEIGHT OF NEAREST BUILDING AND HVAC = HEATING, VENTILATING AND AIR CONDITIONING

OFC USE

********* EXHAUST *********

ACTION CODE	STACK ID	DESC CODE	HEIGHT ABOVE GROUND (FEET)	DIAMETER (FEET)	GAS TEMP (F)	GAS FLOW RATE (CFM)	GAS VELOCITY (FPM)	*OFC USE ONLY* UTM EAST (KILOMETER)	UTM NORTH (KILOMETER)
	90017	6	60*	6*					
	90018	6	60*	6*					
	80001**	4	30						
	80002	4	30						

** This device was not operating in 1989.

NAME Lida Moussavian DATE NOV 0 9 1990

ARB-STK/890323

* These represent the estimated values only. There are no source test reports.

EMISSION YEAR 19 89

AIR TOXICS EMISSION DATA SYSTEM REVIEW & UPDATE REPORT
STACK DATA

FORM **STK**

FOR OFFICE USE ONLY COUNTY ID: FACILITY ID:

DO NOT DELETE STACK IF IT SERVES OTHER DEVICES. SEE INSTRUCTIONS

DESC CODE	STACK/VENT CATEGORY	REQUIRED INFORMATION
	AMBIENT TEMP & LOW-VELOCITY EXHAUST (T W/IN 25 F OF AMBIENT & V LT 750 FPM)	
1	RELEASE POINT(RP) AT GROUND-LEVEL	STACK ID & CODE ONLY
2	RELEASE FROM BLDG HVAC ONLY	STACK ID, CODE, & STACK HEIGHT
3	RP W/IN (2.5 X HB) ABOVE GROUND AND W/IN (5 X HB) SIDEWAYS TO NEAREST BLDG	STACK ID, CODE & STACK HEIGHT
4	OTHER STACK/VENT (LOW T,V)	STACK ID, CODE & STACK HEIGHT
	OTHER TEMP & FLOW CONDITIONS	
5	RP W/IN (2.5 X HB) ABOVE GROUND AND W/IN (5 X HB) SIDEWAYS TO NEAREST BLDG	ALL STACK INFORMATION
6	OTHER STACK/VENT (OTHER T,V)	ALL STACK INFORMATION

WHERE HB = HEIGHT OF NEAREST BUILDING AND HVAC = HEATING, VENTILATING AND AIR CONDITIONING

OFC USE

Delete - plan incorrect.

********* EXHAUST *********

OFC USE ONLY

ACTION CODE	STACK ID	DESC CODE	HEIGHT ABOVE GROUND (FEET)	DIAMETER (FEET)	GAS TEMP (F)	GAS FLOW RATE (CFM)	GAS VELOCITY (FPM)	UTM EAST (KILOMETER)	UTM NORTH (KILOMETER)
	80003								
	80004	4	18						
	80005	4	8						
	80006	4	8						

NAME Lida Moussavian DATE NOV 09 1990

ARB STK/890323

EMISSION YEAR 19 89

AIR TOXICS EMISSION DATA SYSTEM REVIEW & UPDATE REPORT
STACK DATA

FORM **STK**

FOR OFFICE USE ONLY COUNTY ID: FACILITY ID:

DO NOT DELETE STACK IF IT SERVES OTHER DEVICES. SEE INSTRUCTIONS

DESC CODE	STACK/VENT CATEGORY	REQUIRED INFORMATION
	AMBIENT TEMP & LOW-VELOCITY EXHAUST (T W/IN 25 F OF AMBIENT & V LT 750 FPM)	
1	RELEASE POINT(RP) AT GROUND-LEVEL	STACK ID & CODE ONLY
2	RELEASE FROM BLDG HVAC ONLY	STACK ID, CODE, & STACK HEIGHT
3	RP W/IN (2.5 X HB) ABOVE GROUND AND W/IN (5 X HB) SIDEWAYS TO NEAREST BLDG	STACK ID, CODE & STACK HEIGHT
4	OTHER STACK/VENT (LOW T.V)	STACK ID, CODE & STACK HEIGHT
	OTHER TEMP & FLOW CONDITIONS	
5	RP W/IN (2.5 X HB) ABOVE GROUND AND W/IN (5 X HB) SIDEWAYS TO NEAREST BLDG	ALL STACK INFORMATION
6	OTHER STACK/VENT (OTHER T.V)	ALL STACK INFORMATION

WHERE HB = HEIGHT OF NEAREST BUILDING AND HVAC = HEATING, VENTILATING AND AIR CONDITIONING

OFC USE

********* EXHAUST *********

ACTION CODE	STACK ID	DESC CODE	HEIGHT ABOVE GROUND (FEET)	DIAMETER (FEET)	GAS TEMP (F)	GAS FLOW RATE (CFM)	GAS VELOCITY (FPM)	*OFC USE ONLY* UTM EAST (KILOMETER)	UTM NORTH (KILOMETER)
	80007	4	8						
	80008	4	8						
	80009	4	8						
	80010*	4	8						

NAME Lida Moussavian DATE MAY 09 1990

ARB-STK/890323

* This device was not in operation in 1989.

EMISSION YEAR 19 89	AIR TOXICS EMISSION DATA SYSTEM REVIEW & UPDATE REPORT STACK DATA	FORM STK

FOR OFFICE USE ONLY COUNTY ID: FACILITY ID:

DO NOT DELETE STACK IF IT SERVES OTHER DEVICES. SEE INSTRUCTIONS

DESC CODE	STACK/VENT CATEGORY	REQUIRED INFORMATION
	AMBIENT TEMP & LOW-VELOCITY EXHAUST (T W/IN 25 F OF AMBIENT & V LT 750 FPM)	
1	RELEASE POINT(RP) AT GROUND-LEVEL	STACK ID & CODE ONLY
2	RELEASE FROM BLDG HVAC ONLY	STACK ID, CODE, & STACK HEIGHT
3	RP W/IN (2.5 X HB) ABOVE GROUND AND W/IN (5 X HB) SIDEWAYS TO NEAREST BLDG	STACK ID, CODE & STACK HEIGHT
4	OTHER STACK/VENT (LOW T,V)	STACK ID, CODE & STACK HEIGHT
	OTHER TEMP & FLOW CONDITIONS	
5	RP W/IN (2.5 X HB) ABOVE GROUND AND W/IN (5 X HB) SIDEWAYS TO NEAREST BLDG	ALL STACK INFORMATION
6	OTHER STACK/VENT (OTHER T,V)	ALL STACK INFORMATION

WHERE HB = HEIGHT OF NEAREST BUILDING AND HVAC = HEATING, VENTILATING AND AIR CONDITIONING

OFC USE

********* EXHAUST *********

ACTION CODE	STACK ID	DESC CODE	HEIGHT ABOVE GROUND (FEET)	DIAMETER (FEET)	GAS TEMP (F)	GAS FLOW RATE (CFM)	GAS VELOCITY (FPM)	*OFC USE ONLY* UTM EAST (KILOMETER)	UTM NORTH (KILOMETER)
	80011*	4	8						
	80012	4	10						
	80013	4	10						
	80014	4	20						

NAME Lida Moussavian DATE NOV 09 1990

ARB STK 890323

* These devices were not in operation in 1989.

EMISSION YEAR 19 89

AIR TOXICS EMISSION DATA SYSTEM REVIEW & UPDATE REPORT
STACK DATA

FORM **STK**

FOR OFFICE USE ONLY COUNTY ID: FACILITY ID:

DO NOT DELETE STACK IF IT SERVES OTHER DEVICES. SEE INSTRUCTIONS

DESC CODE	STACK/VENT CATEGORY	REQUIRED INFORMATION
	AMBIENT TEMP & LOW-VELOCITY EXHAUST (T W/IN 25 F OF AMBIENT & V LT 750 FPM)	
1	RELEASE POINT(RP) AT GROUND-LEVEL	STACK ID & CODE ONLY
2	RELEASE FROM BLDG HVAC ONLY	STACK ID. CODE. & STACK HEIGHT
3	RP W/IN (2.5 X HB) ABOVE GROUND AND W/IN (5 X HB) SIDEWAYS TO NEAREST BLDG	STACK ID. CODE & STACK HEIGHT
4	OTHER STACK/VENT (LOW T.V)	STACK ID. CODE & STACK HEIGHT
	OTHER TEMP & FLOW CONDITIONS	
5	RP W/IN (2.5 X HB) ABOVE GROUND AND W/IN (5 X HB) SIDEWAYS TO NEAREST BLDG	ALL STACK INFORMATION
6	OTHER STACK/VENT (OTHER T.V)	ALL STACK INFORMATION

WHERE HB = HEIGHT OF NEAREST BUILDING AND HVAC = HEATING, VENTILATING AND AIR CONDITIONING

OFC USE

********* EXHAUST *********

ACTION CODE	STACK ID	DESC CODE	HEIGHT ABOVE GROUND (FEET)	DIAMETER (FEET)	GAS TEMP (F)	GAS FLOW RATE (CFM)	GAS VELOCITY (FPM)	*OFC USE ONLY* UTM EAST (KILOMETER)	UTM NORTH (KILOMETER)
	80015	4	20						
	80016	4	20						
	80017 *	4							
	80018 *	4							

NAME Lida Moussavian DATE NOV 09 1990

ARB STK/890313

* These devices have not been used in 1989.

EMISSION YEAR 19 89

AIR TOXICS EMISSION DATA SYSTEM REVIEW & UPDATE REPORT
STACK DATA

FORM **STK**

FOR OFFICE USE ONLY COUNTY ID: FACILITY ID:

DO NOT DELETE STACK IF IT SERVES OTHER DEVICES. SEE INSTRUCTIONS

DESC CODE	STACK/VENT CATEGORY	REQUIRED INFORMATION
	AMBIENT TEMP & LOW-VELOCITY EXHAUST (T W/IN 25 F OF AMBIENT & V LT 750 FPM)	
1	RELEASE POINT(RP) AT GROUND-LEVEL	STACK ID & CODE ONLY
2	RELEASE FROM BLDG HVAC ONLY	STACK ID. CODE. & STACK HEIGHT
3	RP W/IN (2.5 X HB) ABOVE GROUND AND W/IN (5 X HB) SIDEWAYS TO NEAREST BLDG	STACK ID. CODE & STACK HEIGHT
4	OTHER STACK/VENT (LOW T.V)	STACK ID. CODE & STACK HEIGHT
	OTHER TEMP & FLOW CONDITIONS	
5	RP W/IN (2.5 X HB) ABOVE GROUND AND W/IN (5 X HB) SIDEWAYS TO NEAREST BLDG	ALL STACK INFORMATION
6	OTHER STACK/VENT (OTHER T.V)	ALL STACK INFORMATION

WHERE HB = HEIGHT OF NEAREST BUILDING AND HVAC = HEATING, VENTILATING AND AIR CONDITIONING

OFC USE

********* EXHAUST *********

ACTION CODE	STACK ID	DESC CODE	HEIGHT ABOVE GROUND (FEET)	DIAMETER (FEET)	GAS TEMP (F)	GAS FLOW RATE (CFM)	GAS VELOCITY (FPM)	*OFC USE ONLY* UTM EAST (KILOMETER)	UTM NORTH (KILOMETER)
	80019	4	10						
	80020	4	10						
	80021	4	10						
	80022 *	4							

Delete - device removed prior to 1989.

NAME Lida Moussavian DATE NOV 09 1990

ARB-STK-890323

* These devices have not been used in 1989.

EMISSION YEAR 19 89	AIR TOXICS EMISSION DATA SYSTEM REVIEW & UPDATE REPORT STACK DATA	FORM STK

FOR OFFICE USE ONLY COUNTY ID: FACILITY ID:

DO NOT DELETE STACK IF IT SERVES OTHER DEVICES. SEE INSTRUCTIONS

DESC CODE	STACK/VENT CATEGORY	REQUIRED INFORMATION
	AMBIENT TEMP & LOW-VELOCITY EXHAUST (T W/IN 25 F OF AMBIENT & V LT 750 FPM)	
1	RELEASE POINT(RP) AT GROUND-LEVEL	STACK ID & CODE ONLY
2	RELEASE FROM BLDG HVAC ONLY	STACK ID, CODE, & STACK HEIGHT
3	RP W/IN (2.5 X HB) ABOVE GROUND AND W/IN (5 X HB) SIDEWAYS TO NEAREST BLDG	STACK ID, CODE & STACK HEIGHT
4	OTHER STACK/VENT (LOW T.V)	STACK ID, CODE & STACK HEIGHT
	OTHER TEMP & FLOW CONDITIONS	
5	RP W/IN (2.5 X HB) ABOVE GROUND AND W/IN (5 X HB) SIDEWAYS TO NEAREST BLDG	ALL STACK INFORMATION
6	OTHER STACK/VENT (OTHER T.V)	ALL STACK INFORMATION

WHERE HB = HEIGHT OF NEAREST BUILDING AND HVAC = HEATING, VENTILATING AND AIR CONDITIONING

OFC USE — *OFC USE ONLY*

********* EXHAUST *********

ACTION CODE	STACK ID	DESC CODE	HEIGHT ABOVE GROUND (FEET)	DIAMETER (FEET)	GAS TEMP (F)	GAS FLOW RATE (CFM)	GAS VELOCITY (FPM)	UTM EAST (KILOMETER)	UTM NORTH (KILOMETER)
	80023	4	10						
ACTION CODE	STACK ID	DESC CODE	HEIGHT ABOVE GROUND (FEET)	DIAMETER (FEET)	GAS TEMP (F)	GAS FLOW RATE (CFM)	GAS VELOCITY (FPM)	UTM EAST (KILOMETER)	UTM NORTH (KILOMETER)
	80024	4	10						
ACTION CODE	STACK ID	DESC CODE	HEIGHT ABOVE GROUND (FEET)	DIAMETER (FEET)	GAS TEMP (F)	GAS FLOW RATE (CFM)	GAS VELOCITY (FPM)	UTM EAST (KILOMETER)	UTM NORTH (KILOMETER)
	80025	4	10						
ACTION CODE	STACK ID	DESC CODE	HEIGHT ABOVE GROUND (FEET)	DIAMETER (FEET)	GAS TEMP (F)	GAS FLOW RATE (CFM)	GAS VELOCITY (FPM)	UTM EAST (KILOMETER)	UTM NORTH (KILOMETER)
	80026	4	10						

NAME Lida Moussavian DATE NOV 09 1990

ARB-STK/890323

EMISSION YEAR 19 89	AIR TOXICS EMISSION DATA SYSTEM REVIEW & UPDATE REPORT STACK DATA	FORM **STK**

FOR OFFICE USE ONLY COUNTY ID: FACILITY ID:

DO NOT DELETE STACK IF IT SERVES OTHER DEVICES. SEE INSTRUCTIONS

DESC CODE	STACK/VENT CATEGORY	REQUIRED INFORMATION
	AMBIENT TEMP & LOW-VELOCITY EXHAUST (T W/IN 25 F OF AMBIENT & V LT 750 FPM)	
1	RELEASE POINT(RP) AT GROUND-LEVEL	STACK ID & CODE ONLY
2	RELEASE FROM BLDG HVAC ONLY	STACK ID. CODE. & STACK HEIGHT
3	RP W/IN (2.5 X HB) ABOVE GROUND AND W/IN (5 X HB) SIDEWAYS TO NEAREST BLDG	STACK ID. CODE & STACK HEIGHT
4	OTHER STACK/VENT (LOW T.V)	STACK ID. CODE & STACK HEIGHT
	OTHER TEMP & FLOW CONDITIONS	
5	RP W/IN (2.5 X HB) ABOVE GROUND AND W/IN (5 X HB) SIDEWAYS TO NEAREST BLDG	ALL STACK INFORMATION
6	OTHER STACK/VENT (OTHER T.V)	ALL STACK INFORMATION

WHERE HB = HEIGHT OF NEAREST BUILDING AND HVAC = HEATING, VENTILATING AND AIR CONDITIONING

OFC USE

********** EXHAUST **********

ACTION CODE	STACK ID	DESC CODE	HEIGHT ABOVE GROUND (FEET)	DIAMETER (FEET)	GAS TEMP (F)	GAS FLOW RATE (CFM)	GAS VELOCITY (FPM)	*OFC USE ONLY UTM EAST (KILOMETER)	UTM NORTH (KILOMETER)
	80027	4	10*						
	80028	4	15*						
	80029	4	15*						
	80030	4	10*						

NAME Lida Moussavian DATE NOV 09 1990

ARB/STK/890323

* These represent the estimated values.

EMISSION YEAR 19 89	AIR TOXICS EMISSION DATA SYSTEM REVIEW & UPDATE REPORT STACK DATA	FORM **STK**

FOR OFFICE USE ONLY COUNTY ID: FACILITY ID:

DO NOT DELETE STACK IF IT SERVES OTHER DEVICES. SEE INSTRUCTIONS

DESC CODE	STACK/VENT CATEGORY	REQUIRED INFORMATION
	AMBIENT TEMP & LOW-VELOCITY EXHAUST (T W/IN 25 F OF AMBIENT & V LT 750 FPM)	
1	RELEASE POINT(RP) AT GROUND-LEVEL	STACK ID & CODE ONLY
2	RELEASE FROM BLDG HVAC ONLY	STACK ID, CODE, & STACK HEIGHT
3	RP W/IN (2.5 X HB) ABOVE GROUND AND W/IN (5 X HB) SIDEWAYS TO NEAREST BLDG	STACK ID, CODE & STACK HEIGHT
4	OTHER STACK/VENT (LOW T,V)	STACK ID, CODE & STACK HEIGHT
	OTHER TEMP & FLOW CONDITIONS	
5	RP W/IN (2.5 X HB) ABOVE GROUND AND W/IN (5 X HB) SIDEWAYS TO NEAREST BLDG	ALL STACK INFORMATION
6	OTHER STACK/VENT (OTHER T,V)	ALL STACK INFORMATION

WHERE HB = HEIGHT OF NEAREST BUILDING AND HVAC = HEATING, VENTILATING AND AIR CONDITIONING

OFC USE ONLY

********** EXHAUST **********

ACTION CODE	STACK ID	DESC CODE	HEIGHT ABOVE GROUND (FEET)	DIAMETER (FEET)	GAS TEMP (F)	GAS FLOW RATE (CFM)	GAS VELOCITY (FPM)	*OFC USE ONLY* UTM EAST (KILOMETER)	UTM NORTH (KILOMETER)
	80031	4	10*						
	80032	4	10*						
	80033	4	10*						
	80034	4	10*						

NAME Lida Moussavian DATE NOV 09 1990

ARB-STK-890323

* These represent the estimated values.

EMISSION YEAR 19 89	AIR TOXICS EMISSION DATA SYSTEM REVIEW & UPDATE REPORT STACK DATA	FORM STK

FOR OFFICE USE ONLY COUNTY ID: FACILITY ID:

DO NOT DELETE STACK IF IT SERVES OTHER DEVICES. SEE INSTRUCTIONS

DESC CODE	STACK/VENT CATEGORY	REQUIRED INFORMATION
	AMBIENT TEMP & LOW-VELOCITY EXHAUST (T W/IN 25 F OF AMBIENT & V LT 750 FPM)	
1	RELEASE POINT(RP) AT GROUND-LEVEL	STACK ID & CODE ONLY
2	RELEASE FROM BLDG HVAC ONLY	STACK ID. CODE. & STACK HEIGHT
3	RP W/IN (2.5 X HB) ABOVE GROUND AND W/IN (5 X HB) SIDEWAYS TO NEAREST BLDG	STACK ID. CODE & STACK HEIGHT
4	OTHER STACK/VENT (LOW T.V)	STACK ID. CODE & STACK HEIGHT
	OTHER TEMP & FLOW CONDITIONS	
5	RP W/IN (2.5 X HB) ABOVE GROUND AND W/IN (5 X HB) SIDEWAYS TO NEAREST BLDG	ALL STACK INFORMATION
6	OTHER STACK/VENT (OTHER T.V)	ALL STACK INFORMATION

WHERE HB = HEIGHT OF NEAREST BUILDING AND HVAC = HEATING, VENTILATING AND AIR CONDITIONING

OFC USE — ********* EXHAUST ********* — *OFC USE ONLY*

ACTION CODE	STACK ID	DESC CODE	HEIGHT ABOVE GROUND (FEET)	DIAMETER (FEET)	GAS TEMP (F)	GAS FLOW RATE (CFM)	GAS VELOCITY (FPM)	UTM EAST (KILOMETER)	UTM NORTH (KILOMETER)
	80035	4	10 *						
	80036	4	10 *						
	80037	4	10 *						
	80038	4	10 *						

NAME Lida Moussavian DATE NOV 09 1990

ARB-STK-850323

* These represent the etimated values.

EMISSION YEAR 19 89	AIR TOXICS EMISSION DATA SYSTEM REVIEW & UPDATE REPORT STACK DATA	FORM STK

FOR OFFICE USE ONLY COUNTY ID: FACILITY ID:

DO NOT DELETE STACK IF IT SERVES OTHER DEVICES. SEE INSTRUCTIONS

DESC CODE	STACK/VENT CATEGORY	REQUIRED INFORMATION
	AMBIENT TEMP & LOW-VELOCITY EXHAUST (T W/IN 25 F OF AMBIENT & V LT 750 FPM)	
1	RELEASE POINT(RP) AT GROUND-LEVEL	STACK ID & CODE ONLY
2	RELEASE FROM BLDG HVAC ONLY	STACK ID. CODE. & STACK HEIGHT
3	RP W/IN (2.5 X HB) ABOVE GROUND AND W/IN (5 X HB) SIDEWAYS TO NEAREST BLDG	STACK ID. CODE & STACK HEIGHT
4	OTHER STACK/VENT (LOW T.V)	STACK ID. CODE & STACK HEIGHT
	OTHER TEMP & FLOW CONDITIONS	
5	RP W/IN (2.5 X HB) ABOVE GROUND AND W/IN (5 X HB) SIDEWAYS TO NEAREST BLDG	ALL STACK INFORMATION
6	OTHER STACK/VENT (OTHER T.V)	ALL STACK INFORMATION

WHERE HB = HEIGHT OF NEAREST BUILDING AND HVAC = HEATING, VENTILATING AND AIR CONDITIONING

OFC USE

********* EXHAUST *********

ACTION CODE	STACK ID	DESC CODE	HEIGHT ABOVE GROUND (FEET)	DIAMETER (FEET)	GAS TEMP (F)	GAS FLOW RATE (CFM)	GAS VELOCITY (FPM)	*OFC USE ONLY UTM EAST (KILOMETER)	UTM NORTH (KILOMETER)
	80039	4	10 *						
ACTION CODE	STACK ID	DESC CODE	HEIGHT ABOVE GROUND (FEET)	DIAMETER (FEET)	GAS TEMP (F)	GAS FLOW RATE (CFM)	GAS VELOCITY (FPM)	UTM EAST (KILOMETER)	UTM NORTH (KILOMETER)
	80040	4	10 *						
ACTION CODE	STACK ID	DESC CODE	HEIGHT ABOVE GROUND (FEET)	DIAMETER (FEET)	GAS TEMP (F)	GAS FLOW RATE (CFM)	GAS VELOCITY (FPM)	UTM EAST (KILOMETER)	UTM NORTH (KILOMETER)
	80041	4	10 *						
ACTION CODE	STACK ID	DESC CODE	HEIGHT ABOVE GROUND (FEET)	DIAMETER (FEET)	GAS TEMP (F)	GAS FLOW RATE (CFM)	GAS VELOCITY (FPM)	UTM EAST (KILOMETER)	UTM NORTH (KILOMETER)

NAME Lida Moussavian DATE NOV 09 1990

ARB-STK/890323

* These represent the etimated values.

EMISSION YEAR 19 89

AIR TOXICS EMISSION DATA SYSTEM REVIEW AND UPDATE REPORT
PROCESS AND EMITTENTS DATA

FORM PRO SIDE A

FOR OFFICE USE ONLY

PROCESS DESCRIPTION: C

SCC NO:

COUNTY ID:

AIR BASIN:

ACTION CODE:

PROD1 (OPTIONAL):

PROD2 (OPTIONAL):

FACILITY ID:

STOP FILL OUT ANY SUPPLEMENTAL PROCESS FORM(S) FOR THIS PROCESS FIRST. THEN FILL OUT THIS PAGE. SUBMITTING ONE FOR EACH EMITTING PROCESS IN YOUR FACILITY.

SECTION 1
PROCESS DATA

DEVICE I.D.: 70001

SIC: 971

CONFIDENTIAL (Y/N) IF Y CHECK SMALL BOXES AS APPROPRIATE: N

PROCESS EQUIPMENT DESCRIPTION: BOILER C

FUEL TYPE /OTHER PROCESS INFO: NATURAL GAS C

NOTE USE 1 SPACE FOR EACH DECIMAL POINT

TOTAL YEARLY PROCESS RATE (UNITS/YR)	MAXIMUM HOURLY PROCESS RATE (UNITS/HR)	PROCESS UNITS	HRS/ DAY	DAYS/ WEEK	WKS/ YEAR
1.35 C	4.184 E -03 C	P T 074 C	10 C	07 C	20 C

RELATIVE MONTHLY ACTIVITY (%) C

JAN	FEB	MAR	APR	MAY	JUN	JUL	AUG	SEP	OCT	NOV	DEC
20.0	20.0	20.0	0.00	0.00	0.00	0.00	0.00	0.00	0.00	20.0	20.0

OFFICE USE ONLY

SECTION 2

ACTION CODE	EMITTENT ID	EST METH	ACTUAL EMISSIONS FACTOR(LBS/UNIT)	ANNUAL AVERAGE EMISSIONS (LBS/YR)	ALLOWABLE EMIS LBS/YR(OPTIONAL)	*CONTROL EQPT CODES* PRIMARY	SECONDARY	OVERALL CONTROL EFF(%)	FULL/ PART	HOURLY MAX EMISSIONS (LBS/HOUR)
	71432	05 C	9.10 E -02 C	1.23 E -04						3.81 E -04

ARB/PRO 890327

NAME Lida Moussavian

DATE NOV 09 1990

EMISSION YEAR 1989

AIR TOXICS EMISSION DATA SYSTEM REVIEW AND UPDATE REPORT
PROCESS AND EMITTENTS DATA

FORM PRO SIDE A

FOR OFFICE USE ONLY

PROCESS DESCRIPTION: C

SCC NO:

COUNTY ID:

AIR BASIN:

ACTION CODE:

PROD1 (OPTIONAL):

PROD2 (OPTIONAL):

FACILITY ID:

STOP FILL OUT ANY SUPPLEMENTAL PROCESS FORM(S) FOR THIS PROCESS FIRST. THEN FILL OUT THIS PAGE, SUBMITTING ONE FOR EACH EMITTING PROCESS IN YOUR FACILITY.

SECTION 1
PROCESS DATA

DEVICE I.D.: 70002

SIC: 971

CONFIDENTIAL (Y/N) IF Y CHECK SMALL BOXES AS APPROPRIATE: N

PROCESS EQUIPMENT DESCRIPTION: BOILER C

FUEL TYPE /OTHER PROCESS INFO: NATURAL GAS C

NOTE USE 1 SPACE FOR EACH DECIMAL POINT

TOTAL YEARLY PROCESS RATE (UNITS/YR)	MAXIMUM HOURLY PROCESS RATE (UNITS/HR)	PROCESS UNITS	HRS/ DAY	DAYS/ WEEK	WKS/ YEAR
1.68 C	2.23 E -03 C	P T 074 C	10 C	06 C	52 C

RELATIVE MONTHLY ACTIVITY (%) C

JAN	FEB	MAR	APR	MAY	JUN	JUL	AUG	SEP	OCT	NOV	DEC
8.33	8.33	8.33	8.33	8.33	8.33	8.33	8.33	8.33	8.33	8.33	8.33

OFFICE USE ONLY

SECTION 2

EMITTENT DATA				EMISSIONS
EMITTENT ID	EST METH	ACTUAL EMISSIONS FACTOR(LBS/UNIT)		ANNUAL AVERAGE EMISSIONS (LBS/YR)
71432	05 C	9.10 E -02 C		1.53 E -01
CONTROL EQPT CODES PRIMARY	SECONDARY	OVERALL CONTROL EFF(%)	FULL/ PART	HOURLY MAX EMISSIONS (LBS/HOUR)
C	C	C	C	2.03 E -04
EMITTENT ID	EST METH	ACTUAL EMISSIONS FACTOR(LBS/UNIT)		ANNUAL AVERAGE EMISSIONS (LBS/YR)
	C	C		
CONTROL EQPT CODES PRIMARY	SECONDARY	OVERALL CONTROL EFF(%)	FULL/ PART	HOURLY MAX EMISSIONS (LBS/HOUR)
C	C	C	C	

ACTION CODE

ALLOWABLE EMIS LBS/YR(OPTIONAL)

ACTION CODE

ALLOWABLE EMIS LBS/YR(OPTIONAL)

ARB/PRO 890327

NAME Lida Moussavian DATE NOV 09 1990

EMISSION YEAR 19 89

AIR TOXICS EMISSION DATA SYSTEM REVIEW AND UPDATE REPORT
PROCESS AND EMITTENTS DATA

FORM PRO SIDE A

FOR OFFICE USE ONLY

PROCESS DESCRIPTION: | SCC NO: | COUNTY ID: | AIR BASIN:

ACTION CODE: | PROD 1 (OPTIONAL): | PROD 2 (OPTIONAL): | FACILITY ID:

STOP FILL OUT ANY SUPPLEMENTAL PROCESS FORM(S) FOR THIS PROCESS FIRST. THEN FILL OUT THIS PAGE. SUBMITTING ONE FOR EACH EMITTING PROCESS IN YOUR FACILITY.

SECTION 1
PROCESS DATA

DEVICE I.D.: 70003

SIC: 971

CONFIDENTIAL (Y/N) IF Y CHECK SMALL BOXES AS APPROPRIATE: N

PROCESS EQUIPMENT DESCRIPTION: BOILER

FUEL TYPE /OTHER PROCESS INFO: NATURAL GAS

NOTE USE 1 SPACE FOR EACH DECIMAL POINT

TOTAL YEARLY PROCESS RATE (UNITS/YR)	MAXIMUM HOURLY PROCESS RATE (UNITS/HR)	PROCESS UNITS	HRS/DAY	DAYS/WEEK	WKS/YEAR
1.08	4.25 E -03	P T 074	08	07	20

RELATIVE MONTHLY ACTIVITY (%)

JAN	FEB	MAR	APR	MAY	JUN	JUL	AUG	SEP	OCT	NOV	DEC
20.0	20.0	20.0	0.00	0.00	0.00	0.00	0.00	0.00	0.00	20.0	20.0

OFFICE USE ONLY

SECTION 2

ACTION CODE	EMITTENT ID	EST METH	ACTUAL EMISSIONS FACTOR(LBS/UNIT)	ANNUAL AVERAGE EMISSIONS (LBS/YR)	ALLOWABLE EMIS LBS/YR(OPTIONAL)	*CONTROL EQPT CODES* PRIMARY	SECONDARY	OVERALL CONTROL EFF(%)	FULL/PART	HOURLY MAX EMISSIONS (LBS/HOUR)
	71432	05	9.10 E -02	9.83 E -02						3.87 E -04

ACTION CODE	EMITTENT ID	EST METH	ACTUAL EMISSIONS FACTOR(LBS/UNIT)	ANNUAL AVERAGE EMISSIONS (LBS/YR)	ALLOWABLE EMIS LBS/YR(OPTIONAL)	*CONTROL EQPT CODES* PRIMARY	SECONDARY	OVERALL CONTROL EFF(%)	FULL/PART	HOURLY MAX EMISSIONS (LBS/HOUR)

ARB/PRO.890327

NAME Lida Moussavian DATE NOV 09 1990

EMISSION YEAR 19 89

AIR TOXICS EMISSION DATA SYSTEM REVIEW AND UPDATE REPORT
PROCESS AND EMITTENTS DATA

FORM PRO SIDE A

FOR OFFICE USE ONLY

PROCESS DESCRIPTION: | C | SCC NO: | COUNTY ID: | AIR BASIN:

ACTION CODE | PROD1 (OPTIONAL) | PROD2 (OPTIONAL) | FACILITY ID:

STOP FILL OUT ANY SUPPLEMENTAL PROCESS FORM(S) FOR THIS PROCESS FIRST. THEN FILL OUT THIS PAGE, SUBMITTING ONE FOR EACH EMITTING PROCESS IN YOUR FACILITY.

SECTION 1
PROCESS DATA

DEVICE I.D.: 70004

SIC: 971

CONFIDENTIAL (Y/N) IF Y CHECK SMALL BOXES AS APPROPRIATE: N

PROCESS EQUIPMENT DESCRIPTION: BOILER C

FUEL TYPE /OTHER PROCESS INFO: NATURAL GAS C

NOTE USE 1 SPACE FOR EACH DECIMAL POINT

TOTAL YEARLY PROCESS RATE (UNITS/YR)	MAXIMUM HOURLY PROCESS RATE (UNITS/HR)	PROCESS UNITS	HRS/ DAY	DAYS/ WEEK	WKS/ YEAR
1.08 C	4.25 E -03 C	P T 074 C	08 C	07 C	20 C

RELATIVE MONTHLY ACTIVITY (%) C

JAN	FEB	MAR	APR	MAY	JUN	JUL	AUG	SEP	OCT	NOV	DEC
20.0	20.0	20.0	0.00	0.00	0.00	0.00	0.00	0.00	0.00	20.0	20.0

OFFICE USE ONLY

SECTION 2

ACTION CODE	EMITTENT ID	EST METH	ACTUAL EMISSIONS FACTOR(LBS/UNIT)	ANNUAL AVERAGE EMISSIONS (LBS/YR)
	71432	05 C	9.10 E -02 C	9.83 E -02

ALLOWABLE EMIS LBS/YR(OPTIONAL)	*CONTROL EQPT CODES* PRIMARY	SECONDARY	OVERALL CONTROL EFF(%)	FULL/ PART	HOURLY MAX EMISSIONS (LBS/HOUR)
	C	C	C	C	3.87 E -04

ACTION CODE	EMITTENT ID	EST METH	ACTUAL EMISSIONS FACTOR(LBS/UNIT)	ANNUAL AVERAGE EMISSIONS (LBS/YR)
		C	C	

ALLOWABLE EMIS LBS/YR(OPTIONAL)	*CONTROL EQPT CODES* PRIMARY	SECONDARY	OVERALL CONTROL EFF(%)	FULL/ PART	HOURLY MAX EMISSIONS (LBS/HOUR)
	C	C	C	C	

ARB/PRO 890327

NAME Lida Moussavian

DATE JUL 09 1990

EMISSION YEAR 19 89

AIR TOXICS EMISSION DATA SYSTEM REVIEW AND UPDATE REPORT
PROCESS AND EMITTENTS DATA

FORM PRO SIDE A

FOR OFFICE USE ONLY

PROCESS DESCRIPTION: C

SCC NO:

COUNTY ID:

AIR BASIN:

ACTION CODE:

PROD1 (OPTIONAL):

PROD2 (OPTIONAL):

FACILITY ID:

STOP FILL OUT ANY SUPPLEMENTAL PROCESS FORM(S) FOR THIS PROCESS FIRST, THEN FILL OUT THIS PAGE, SUBMITTING ONE FOR EACH EMITTING PROCESS IN YOUR FACILITY.

SECTION 1
PROCESS DATA

DEVICE I.D.: 70005

SIC: 971

CONFIDENTIAL (Y/N) IF Y CHECK SMALL BOXES AS APPROPRIATE: N

PROCESS EQUIPMENT DESCRIPTION: BOILER C

FUEL TYPE /OTHER PROCESS INFO: NATURAL GAS C

NOTE USE 1 SPACE FOR EACH DECIMAL POINT

TOTAL YEARLY PROCESS RATE (UNITS/YR)	MAXIMUM HOURLY PROCESS RATE (UNITS/HR)	PROCESS UNITS	HRS/ DAY	DAYS/ WEEK	WKS/ YEAR
1.08 C	4.25 E -03 C	P T 074 C	08 C	07 C	20 C

RELATIVE MONTHLY ACTIVITY (%) C

JAN	FEB	MAR	APR	MAY	JUN	JUL	AUG	SEP	OCT	NOV	DEC
20.0	20.0	20.0	0.00	0.00	0.00	0.00	0.00	0.00	0.00	20.0	20.0

OFFICE USE ONLY

SECTION 2

ACTION CODE	EMITTENT ID	EST METH	ACTUAL EMISSIONS FACTOR(LBS/UNIT)	ANNUAL AVERAGE EMISSIONS (LBS/YR)	ALLOWABLE EMIS LBS/YR(OPTIONAL)	*CONTROL EQPT CODES* PRIMARY	SECONDARY	OVERALL CONTROL EFF(%)	FULL/ PART	HOURLY MAX EMISSIONS (LBS/HOUR)
	71432	05 C	9.10 E -02 C	9.83 E -02						3.87 E -04

NAME Lida Mousseau DATE NOV 09 1990

ARB/PRO 890327

EMISSION YEAR 1989

AIR TOXICS EMISSION DATA SYSTEM REVIEW AND UPDATE REPORT
PROCESS AND EMITTENTS DATA

FORM PRO SIDE A

FOR OFFICE USE ONLY

PROCESS DESCRIPTION: C

SCC NO:

COUNTY ID:

AIR BASIN:

ACTION CODE:

PROD1 (OPTIONAL):

PROD2 (OPTIONAL):

FACILITY ID:

STOP FILL OUT ANY SUPPLEMENTAL PROCESS FORM(S) FOR THIS PROCESS FIRST. THEN FILL OUT THIS PAGE. SUBMITTING ONE FOR EACH EMITTING PROCESS IN YOUR FACILITY.

SECTION 1
PROCESS DATA

DEVICE I.D.: 70006

SIC: 971

CONFIDENTIAL (Y/N) IF Y CHECK SMALL BOXES AS APPROPRIATE: N

PROCESS EQUIPMENT DESCRIPTION: BOILER C

FUEL TYPE /OTHER PROCESS INFO: NATURAL GAS C

NOTE USE 1 SPACE FOR EACH DECIMAL POINT

TOTAL YEARLY PROCESS RATE (UNITS/YR)	MAXIMUM HOURLY PROCESS RATE (UNITS/HR)	PROCESS UNITS	HRS/ DAY	DAYS/ WEEK	WKS/ YEAR
1.08 C	4.25 E -03 C	P T 074 C	08 C	07 C	20 C

RELATIVE MONTHLY ACTIVITY (%) C

JAN	FEB	MAR	APR	MAY	JUN	JUL	AUG	SEP	OCT	NOV	DEC
20.0	20.0	20.0	0.00	0.00	0.00	0.00	0.00	0.00	0.00	20.0	20.0

OFFICE USE ONLY

SECTION 2

ACTION CODE	EMITTENT ID	EST METH	ACTUAL EMISSIONS FACTOR(LBS/UNIT)	ANNUAL AVERAGE EMISSIONS (LBS/YR)	ALLOWABLE EMIS LBS/YR(OPTIONAL)	*CONTROL EQPT CODES* PRIMARY	SECONDARY	OVERALL CONTROL EFF(%)	FULL/ PART	HOURLY MAX EMISSIONS (LBS/HOUR)
	71432	05 C	9.10 E -02 C	9.80 E -02						3.87 E -04

NAME Lida Moussavian

DATE NOV 09 1990

ARB/PRO 890327

EMISSION YEAR 19 89

AIR TOXICS EMISSION DATA SYSTEM REVIEW AND UPDATE REPORT
PROCESS AND EMITTENTS DATA

FORM **PRO** SIDE A

FOR OFFICE USE ONLY

PROCESS DESCRIPTION: | C | SCC NO: | COUNTY ID: | AIR BASIN:

ACTION CODE | PROD1 (OPTIONAL) | PROD2 (OPTIONAL) | FACILITY ID:

STOP FILL OUT ANY SUPPLEMENTAL PROCESS FORM(S) FOR THIS PROCESS FIRST. THEN FILL OUT THIS PAGE. SUBMITTING ONE FOR EACH EMITTING PROCESS IN YOUR FACILITY.

SECTION 1
PROCESS DATA

DEVICE I.D.: 70007

SIC: 971

CONFIDENTIAL (Y/N) IF Y CHECK SMALL BOXES AS APPROPRIATE: N

PROCESS EQUIPMENT DESCRIPTION: BOILER C

FUEL TYPE /OTHER PROCESS INFO: NATURAL GAS C

NOTE USE 1 SPACE FOR EACH DECIMAL POINT

TOTAL YEARLY PROCESS RATE (UNITS/YR)	MAXIMUM HOURLY PROCESS RATE (UNITS/HR)	PROCESS UNITS	HRS/ DAY	DAYS/ WEEK	WKS/ YEAR
1.08 C	2.10 E -03 C	P T 074 C	08 C	07 C	20 C

RELATIVE MONTHLY ACTIVITY (%) C

JAN	FEB	MAR	APR	MAY	JUN	JUL	AUG	SEP	OCT	NOV	DEC
20.0	20.0	20.0	0.00	0.00	0.00	0.00	0.00	0.00	0.00	20.0	20.0

OFFICE USE ONLY

SECTION 2

ACTION CODE	EMITTENT ID	EST METH	ACTUAL EMISSIONS FACTOR(LBS/UNIT)	ANNUAL AVERAGE EMISSIONS (LBS/YR)
	71432	05 C	9.10 E -02 C	5.14 E -02

ALLOWABLE EMIS LBS/YR(OPTIONAL)	*CONTROL EQPT CODES* PRIMARY	SECONDARY	OVERALL CONTROL EFF(%)	FULL/ PART	HOURLY MAX EMISSIONS (LBS/HOUR)
	C	C	C	C	1.91 E -04

ACTION CODE	EMITTENT ID	EST METH	ACTUAL EMISSIONS FACTOR(LBS/UNIT)	ANNUAL AVERAGE EMISSIONS (LBS/YR)
		C	C	

ALLOWABLE EMIS LBS/YR(OPTIONAL)	*CONTROL EQPT CODES* PRIMARY	SECONDARY	OVERALL CONTROL EFF(%)	FULL/ PART	HOURLY MAX EMISSIONS (LBS/HOUR)
	C	C	C	C	

ARB/PRO 890327

NAME Lida Moussavian DATE NOV 09 1990

EMISSION YEAR 19 89

AIR TOXICS EMISSION DATA SYSTEM REVIEW AND UPDATE REPORT
PROCESS AND EMITTENTS DATA

FORM **PRO** SIDE A

FOR OFFICE USE ONLY

PROCESS DESCRIPTION: C

SCC NO:

COUNTY ID:

AIR BASIN:

ACTION CODE:

PROD1 (OPTIONAL):

PROD2 (OPTIONAL):

FACILITY ID:

STOP FILL OUT ANY SUPPLEMENTAL PROCESS FORM(S) FOR THIS PROCESS FIRST. THEN FILL OUT THIS PAGE. SUBMITTING ONE FOR EACH EMITTING PROCESS IN YOUR FACILITY.

SECTION 1
PROCESS DATA

DEVICE I.D.: 70008

SIC: 971

CONFIDENTIAL (Y/N) IF Y CHECK SMALL BOXES AS APPROPRIATE: N

PROCESS EQUIPMENT DESCRIPTION: BOILER C

FUEL TYPE /OTHER PROCESS INFO: NATURAL GAS C

NOTE USE 1 SPACE FOR EACH DECIMAL POINT

TOTAL YEARLY PROCESS RATE (UNITS/YR)	MAXIMUM HOURLY PROCESS RATE (UNITS/HR)	PROCESS UNITS	HRS/ DAY	DAYS/ WEEK	WKS/ YEAR
1.08 C	2.10 E -03 C	P T 074 C	08 C	07 C	20 C

RELATIVE MONTHLY ACTIVITY (%) C

JAN	FEB	MAR	APR	MAY	JUN	JUL	AUG	SEP	OCT	NOV	DEC
20.0	20.0	20.0	0.00	0.00	0.00	0.00	0.00	0.00	0.00	20.0	20.0

OFFICE USE ONLY

SECTION 2

EMITTENT DATA			EMISSIONS
EMITTENT ID	EST METH	ACTUAL EMISSIONS FACTOR(LBS/UNIT)	ANNUAL AVERAGE EMISSIONS (LBS/YR)
71432	05 C	9.10 E -02 C	5.14 E-02

ACTION CODE:

ALLOWABLE EMIS LBS/YR(OPTIONAL):

CONTROL EQPT CODES PRIMARY	SECONDARY	OVERALL CONTROL EFF(%)	FULL/ PART	HOURLY MAX EMISSIONS (LBS/HOUR)
C	C	C	C	1.91 E -04

EMITTENT ID	EST METH	ACTUAL EMISSIONS FACTOR(LBS/UNIT)	ANNUAL AVERAGE EMISSIONS (LBS/YR)
	C	C	

ACTION CODE:

ALLOWABLE EMIS LBS/YR(OPTIONAL):

CONTROL EQPT CODES PRIMARY	SECONDARY	OVERALL CONTROL EFF(%)	FULL/ PART	HOURLY MAX EMISSIONS (LBS/HOUR)
C	C	C	C	

ARB/PRO 890327

NAME Lida Moussavian

DATE NOV 09 1990

EMISSION YEAR 19 89

AIR TOXICS EMISSION DATA SYSTEM REVIEW AND UPDATE REPORT
PROCESS AND EMITTENTS DATA

FORM **PRO** SIDE A

FOR OFFICE USE ONLY

PROCESS DESCRIPTION: C

SCC NO:

COUNTY ID:

AIR BASIN:

ACTION CODE:

PROD1 (OPTIONAL):

PROD2 (OPTIONAL):

FACILITY ID:

STOP FILL OUT ANY SUPPLEMENTAL PROCESS FORM(S) FOR THIS PROCESS FIRST. THEN FILL OUT THIS PAGE, SUBMITTING ONE FOR EACH EMITTING PROCESS IN YOUR FACILITY.

SECTION 1
PROCESS DATA

DEVICE I.D.: 70009

SIC: 971

CONFIDENTIAL (Y/N) IF Y CHECK SMALL BOXES AS APPROPRIATE: N

PROCESS EQUIPMENT DESCRIPTION: BOILER C

FUEL TYPE /OTHER PROCESS INFO: NATURAL GAS C

NOTE USE 1 SPACE FOR EACH DECIMAL POINT

TOTAL YEARLY PROCESS RATE (UNITS/YR)	MAXIMUM HOURLY PROCESS RATE (UNITS/HR)	PROCESS UNITS	HRS/ DAY	DAYS/ WEEK	WKS/ YEAR
6.59 E -01 C	2.50 E -03 C	P T 074 C	08 C	07 C	20 C

RELATIVE MONTHLY ACTIVITY (%) C

JAN	FEB	MAR	APR	MAY	JUN	JUL	AUG	SEP	OCT	NOV	DEC
20.0	20.0	20.0	0.00	0.00	0.00	0.00	0.00	0.00	0.00	20.0	20.0

OFFICE USE ONLY

SECTION 2

ACTION CODE	EMITTENT ID	EST METH	ACTUAL EMISSIONS FACTOR(LBS/UNIT)	ANNUAL AVERAGE EMISSIONS (LBS/YR)
	71432	05 C	9.10 E -02 C	6.00 E -02

ALLOWABLE EMIS LBS/YR(OPTIONAL)	*CONTROL EQPT CODES* PRIMARY	SECONDARY	OVERALL CONTROL EFF(%)	FULL/ PART	HOURLY MAX EMISSIONS (LBS/HOUR)
	C	C	C	C	2.28 E -04

ACTION CODE	EMITTENT ID	EST METH	ACTUAL EMISSIONS FACTOR(LBS/UNIT)	ANNUAL AVERAGE EMISSIONS (LBS/YR)
		C	C	

ALLOWABLE EMIS LBS/YR(OPTIONAL)	*CONTROL EQPT CODES* PRIMARY	SECONDARY	OVERALL CONTROL EFF(%)	FULL/ PART	HOURLY MAX EMISSIONS (LBS/HOUR)
	C	C	C	C	

ARB/PRO 890327

NAME Lida Moussavian

DATE NOV 09 1990

EMISSION YEAR 19 89

AIR TOXICS EMISSION DATA SYSTEM REVIEW AND UPDATE REPORT
PROCESS AND EMITTENTS DATA

FORM **PRO** SIDE A

FOR OFFICE USE ONLY

PROCESS DESCRIPTION: C

SCC NO:

COUNTY ID:

AIR BASIN:

ACTION CODE:

PROD1 (OPTIONAL):

PROD2 (OPTIONAL):

FACILITY ID:

STOP FILL OUT ANY SUPPLEMENTAL PROCESS FORM(S) FOR THIS PROCESS FIRST. THEN FILL OUT THIS PAGE, SUBMITTING ONE FOR EACH EMITTING PROCESS IN YOUR FACILITY.

SECTION 1
PROCESS DATA

DEVICE I.D.: 70010

SIC: 971

CONFIDENTIAL (Y/N) IF Y CHECK SMALL BOXES AS APPROPRIATE: N

PROCESS EQUIPMENT DESCRIPTION: BOILER C

FUEL TYPE /OTHER PROCESS INFO: NATURAL GAS C

NOTE USE 1 SPACE FOR EACH DECIMAL POINT

TOTAL YEARLY PROCESS RATE (UNITS/YR)	MAXIMUM HOURLY PROCESS RATE (UNITS/HR)	PROCESS UNITS	HRS/ DAY	DAYS/ WEEK	WKS/ YEAR
1.80 E -01 C	3.25 E -04 C	P T 074 C	10 C	06 C	52 C

RELATIVE MONTHLY ACTIVITY (%) C

JAN	FEB	MAR	APR	MAY	JUN	JUL	AUG	SEP	OCT	NOV	DEC
8.33	8.33	8.33	8.33	8.33	8.33	8.33	8.33	8.33	8.33	8.33	8.33

OFFICE USE ONLY

SECTION 2

EMITTENT DATA				EMISSIONS
EMITTENT ID	EST METH	ACTUAL EMISSIONS FACTOR(LBS/UNIT)		ANNUAL AVERAGE EMISSIONS (LBS/YR)
71432	05 C	9.10 E -02 C		1.64 E -02
CONTROL EQPT CODES PRIMARY	SECONDARY	OVERALL CONTROL EFF(%)	FULL/ PART	HOURLY MAX EMISSIONS (LBS/HOUR)
C	C	C	C	2.96 E -04

ACTION CODE:

ALLOWABLE EMIS LBS/YR(OPTIONAL):

EMITTENT ID	EST METH	ACTUAL EMISSIONS FACTOR(LBS/UNIT)		ANNUAL AVERAGE EMISSIONS (LBS/YR)
	C	C		
CONTROL EQPT CODES PRIMARY	SECONDARY	OVERALL CONTROL EFF(%)	FULL/ PART	HOURLY MAX EMISSIONS (LBS/HOUR)
C	C	C	C	

ACTION CODE:

ALLOWABLE EMIS LBS/YR(OPTIONAL):

NAME Lida Moussavian DATE NOV 09 1990

ARB/PRO 890327

EMISSION YEAR 19 89

AIR TOXICS EMISSION DATA SYSTEM REVIEW AND UPDATE REPORT
PROCESS AND EMITTENTS DATA

FORM **PRO** SIDE A

FOR OFFICE USE ONLY

PROCESS DESCRIPTION: C

SCC NO:

COUNTY ID:

AIR BASIN:

ACTION CODE:

PROD1 (OPTIONAL):

PROD2 (OPTIONAL):

FACILITY ID:

STOP FILL OUT ANY SUPPLEMENTAL PROCESS FORM(S) FOR THIS PROCESS FIRST. THEN FILL OUT THIS PAGE, SUBMITTING ONE FOR EACH EMITTING PROCESS IN YOUR FACILITY.

SECTION 1
PROCESS DATA

DEVICE I.D.: 70011

SIC: 971

CONFIDENTIAL (Y/N) IF Y CHECK SMALL BOXES AS APPROPRIATE: N

PROCESS EQUIPMENT DESCRIPTION: BOILER C

FUEL TYPE /OTHER PROCESS INFO: NATURAL GAS C

NOTE USE 1 SPACE FOR EACH DECIMAL POINT

TOTAL YEARLY PROCESS RATE (UNITS/YR)	MAXIMUM HOURLY PROCESS RATE (UNITS/HR)	PROCESS UNITS	HRS/ DAY	DAYS/ WEEK	WKS/ YEAR
5.40 E -01 C	2.00 E -03 C	P T 074 C	08 C	07 C	20 C

RELATIVE MONTHLY ACTIVITY (%) C

JAN	FEB	MAR	APR	MAY	JUN	JUL	AUG	SEP	OCT	NOV	DEC
20.0	20.0	20.0	0.00	0.00	0.00	0.00	0.00	0.00	0.00	20.0	20.0

OFFICE USE ONLY

SECTION 2

EMITTENT DATA				EMISSIONS
EMITTENT ID	EST METH	ACTUAL EMISSIONS FACTOR(LBS/UNIT)		ANNUAL AVERAGE EMISSIONS (LBS/YR)
71432	05 C	9.10 E -02 C		4.91 E -02
CONTROL EQPT CODES PRIMARY	SECONDARY	OVERALL CONTROL EFF(%)	FULL/ PART	HOURLY MAX EMISSIONS (LBS/HOUR)
C	C	C	C	1.82 E -04

ACTION CODE:

ALLOWABLE EMIS LBS/YR(OPTIONAL):

EMITTENT ID	EST METH	ACTUAL EMISSIONS FACTOR(LBS/UNIT)		ANNUAL AVERAGE EMISSIONS (LBS/YR)
	C	C		
CONTROL EQPT CODES PRIMARY	SECONDARY	OVERALL CONTROL EFF(%)	FULL/ PART	HOURLY MAX EMISSIONS (LBS/HOUR)
C	C	C	C	

ACTION CODE:

ALLOWABLE EMIS LBS/YR(OPTIONAL):

NAME: Lida Moussavian

DATE: NOV 09 1990

ARB/PRO 890327

EMISSION YEAR 1989

AIR TOXICS EMISSION DATA SYSTEM REVIEW AND UPDATE REPORT
PROCESS AND EMITTENTS DATA

FORM PRO SIDE A

FOR OFFICE USE ONLY

PROCESS DESCRIPTION: | C

SCC NO:

COUNTY ID:

AIR BASIN:

ACTION CODE:

PROD1 (OPTIONAL):

PROD2 (OPTIONAL):

FACILITY ID:

STOP FILL OUT ANY SUPPLEMENTAL PROCESS FORM(S) FOR THIS PROCESS FIRST. THEN FILL OUT THIS PAGE, SUBMITTING ONE FOR EACH EMITTING PROCESS IN YOUR FACILITY.

SECTION 1
PROCESS DATA

DEVICE I.D.: 70012

SIC: 971

CONFIDENTIAL (Y/N) IF Y CHECK SMALL BOXES AS APPROPRIATE: N

PROCESS EQUIPMENT DESCRIPTION: BOILER | C

FUEL TYPE /OTHER PROCESS INFO: NATURAL GAS | C

NOTE USE 1 SPACE FOR EACH DECIMAL POINT

TOTAL YEARLY PROCESS RATE (UNITS/YR)	MAXIMUM HOURLY PROCESS RATE (UNITS/HR)	PROCESS UNITS	HRS/ DAY	DAYS/ WEEK	WKS/ YEAR
6.91 E -01	2.50 E -03	P T 074	08	07	20

RELATIVE MONTHLY ACTIVITY (%) | C

JAN	FEB	MAR	APR	MAY	JUN	JUL	AUG	SEP	OCT	NOV	DEC
20.0	20.0	20.0	0.00	0.00	0.00	0.00	0.00	0.00	0.00	20.0	20.0

OFFICE USE ONLY

SECTION 2

ACTION CODE	EMITTENT ID	EST METH	ACTUAL EMISSIONS FACTOR(LBS/UNIT)	ANNUAL AVERAGE EMISSIONS (LBS/YR)
	71432	05	9.10 E -02	6.29 E -03

ALLOWABLE EMIS LBS/YR(OPTIONAL):

CONTROL EQPT CODES PRIMARY	SECONDARY	OVERALL CONTROL EFF(%)	FULL/ PART	HOURLY MAX EMISSIONS (LBS/HOUR)
				2.28 E -04

ACTION CODE	EMITTENT ID	EST METH	ACTUAL EMISSIONS FACTOR(LBS/UNIT)	ANNUAL AVERAGE EMISSIONS (LBS/YR)

ALLOWABLE EMIS LBS/YR(OPTIONAL):

CONTROL EQPT CODES PRIMARY	SECONDARY	OVERALL CONTROL EFF(%)	FULL/ PART	HOURLY MAX EMISSIONS (LBS/HOUR)

NAME Lida Moussavian DATE 09 1990

ARB/PRO 890327

EMISSION YEAR 1989

AIR TOXICS EMISSION DATA SYSTEM REVIEW AND UPDATE REPORT
PROCESS AND EMITTENTS DATA

FORM PRO SIDE A

FOR OFFICE USE ONLY

PROCESS DESCRIPTION: | C

SCC NO:

COUNTY ID:

AIR BASIN:

ACTION CODE:

PROD1 (OPTIONAL):

PROD2 (OPTIONAL):

FACILITY ID:

STOP FILL OUT ANY SUPPLEMENTAL PROCESS FORM(S) FOR THIS PROCESS FIRST. THEN FILL OUT THIS PAGE. SUBMITTING ONE FOR EACH EMITTING PROCESS IN YOUR FACILITY.

SECTION 1
PROCESS DATA

DEVICE I.D.: 70013

SIC: 971

CONFIDENTIAL (Y/N) IF Y CHECK SMALL BOXES AS APPROPRIATE: N

PROCESS EQUIPMENT DESCRIPTION: BOILER | C

FUEL TYPE /OTHER PROCESS INFO: NATURAL GAS | C

NOTE USE 1 SPACE FOR EACH DECIMAL POINT

TOTAL YEARLY PROCESS RATE (UNITS/YR)	MAXIMUM HOURLY PROCESS RATE (UNITS/HR)	PROCESS UNITS	HRS/ DAY	DAYS/ WEEK	WKS/ YEAR
6.91 E -01	2.50 E -03	P T 074	08	07	20

RELATIVE MONTHLY ACTIVITY (%) | C

JAN	FEB	MAR	APR	MAY	JUN	JUL	AUG	SEP	OCT	NOV	DEC
20.0	20.0	20.0	0.00	0.00	0.00	0.00	0.00	0.00	0.00	20.0	20.0

OFFICE USE ONLY

SECTION 2

ACTION CODE	EMITTENT ID	EST METH	ACTUAL EMISSIONS FACTOR(LBS/UNIT)	ANNUAL AVERAGE EMISSIONS (LBS/YR)
	71432	05	9.10 E -02	6.88 E -02

ALLOWABLE EMIS LBS/YR(OPTIONAL)	*CONTROL EQPT CODES* PRIMARY	SECONDARY	OVERALL CONTROL EFF(%)	FULL/ PART	HOURLY MAX EMISSIONS (LBS/HOUR)
					2.64 E -04

ACTION CODE	EMITTENT ID	EST METH	ACTUAL EMISSIONS FACTOR(LBS/UNIT)	ANNUAL AVERAGE EMISSIONS (LBS/YR)

ALLOWABLE EMIS LBS/YR(OPTIONAL)	*CONTROL EQPT CODES* PRIMARY	SECONDARY	OVERALL CONTROL EFF(%)	FULL/ PART	HOURLY MAX EMISSIONS (LBS/HOUR)

ARB/PRO 890327

NAME Lida Moussavian DATE NOV 09 1990

EMISSION YEAR 19 89

AIR TOXICS EMISSION DATA SYSTEM REVIEW AND UPDATE REPORT
PROCESS AND EMITTENTS DATA

FORM **PRO** SIDE A

FOR OFFICE USE ONLY

PROCESS DESCRIPTION: C

SCC NO:

COUNTY ID:

AIR BASIN:

ACTION CODE:

PROD1 (OPTIONAL):

PROD2 (OPTIONAL):

FACILITY ID:

STOP FILL OUT ANY SUPPLEMENTAL PROCESS FORM(S) FOR THIS PROCESS FIRST. THEN FILL OUT THIS PAGE, SUBMITTING ONE FOR EACH EMITTING PROCESS IN YOUR FACILITY.

SECTION 1
PROCESS DATA

DEVICE I.D.: 70014

SIC: 971

CONFIDENTIAL (Y/N) IF Y CHECK SMALL BOXES AS APPROPRIATE: N

PROCESS EQUIPMENT DESCRIPTION: BOILER C

FUEL TYPE /OTHER PROCESS INFO: NATURAL GAS C

NOTE USE 1 SPACE FOR EACH DECIMAL POINT

TOTAL YEARLY PROCESS RATE (UNITS/YR)	MAXIMUM HOURLY PROCESS RATE (UNITS/HR)	PROCESS UNITS	HRS/ DAY	DAYS/ WEEK	WKS/ YEAR
7.56 E -01 C	2.90 E -03 C	P T 074 C	08 C	07 C	20 C

RELATIVE MONTHLY ACTIVITY (%) C

JAN	FEB	MAR	APR	MAY	JUN	JUL	AUG	SEP	OCT	NOV	DEC
20.0	20.0	20.0	0.00	0.00	0.00	0.00	0.00	0.00	0.00	20.0	20.0

OFFICE USE ONLY

SECTION 2

EMITTENT DATA					EMISSIONS
ACTION CODE	EMITTENT ID	EST METH	ACTUAL EMISSIONS FACTOR(LBS/UNIT)		ANNUAL AVERAGE EMISSIONS (LBS/YR)
	71432	05 C	9.10 E -02 C		6.88 E -02
ALLOWABLE EMIS LBS/YR(OPTIONAL)	*CONTROL EQPT CODES* PRIMARY	SECONDARY	OVERALL CONTROL EFF(%)	FULL/ PART	HOURLY MAX EMISSIONS (LBS/HOUR)
	C	C	C	C	2.64 E -04
ACTION CODE	EMITTENT ID	EST METH	ACTUAL EMISSIONS FACTOR(LBS/UNIT)		ANNUAL AVERAGE EMISSIONS (LBS/YR)
		C	C		
ALLOWABLE EMIS LBS/YR(OPTIONAL)	*CONTROL EQPT CODES* PRIMARY	SECONDARY	OVERALL CONTROL EFF(%)	FULL/ PART	HOURLY MAX EMISSIONS (LBS/HOUR)
	C	C	C	C	

ARB/PRO 890327

NAME Lida Moussavian

DATE NOV 09 1990

EMISSION YEAR 19 89

AIR TOXICS EMISSION DATA SYSTEM REVIEW AND UPDATE REPORT
PROCESS AND EMITTENTS DATA

FORM PRO SIDE A

FOR OFFICE USE ONLY

PROCESS DESCRIPTION: C

SCC NO:

COUNTY ID:

AIR BASIN:

ACTION CODE:

PROD1 (OPTIONAL):

PROD2 (OPTIONAL):

FACILITY ID:

STOP FILL OUT ANY SUPPLEMENTAL PROCESS FORM(S) FOR THIS PROCESS FIRST. THEN FILL OUT THIS PAGE. SUBMITTING ONE FOR EACH EMITTING PROCESS IN YOUR FACILITY.

SECTION 1
PROCESS DATA

DEVICE I.D.: 70015

SIC: 971

CONFIDENTIAL (Y/N) IF Y CHECK SMALL BOXES AS APPROPRIATE: N

PROCESS EQUIPMENT DESCRIPTION: BOILER C

FUEL TYPE /OTHER PROCESS INFO: NATURAL GAS C

NOTE USE 1 SPACE FOR EACH DECIMAL POINT

TOTAL YEARLY PROCESS RATE (UNITS/YR)	MAXIMUM HOURLY PROCESS RATE (UNITS/HR)	PROCESS UNITS	HRS/ DAY	DAYS/ WEEK	WKS/ YEAR
1.19 C	4.50 E -03 C	P T 074 C	08 C	07 C	20 C

RELATIVE MONTHLY ACTIVITY (%) C

JAN	FEB	MAR	APR	MAY	JUN	JUL	AUG	SEP	OCT	NOV	DEC
20.0	20.0	20.0	0.00	0.00	0.00	0.00	0.00	0.00	0.00	20.0	20.0

OFFICE USE ONLY

SECTION 2

ACTION CODE	EMITTENT ID	EST METH	ACTUAL EMISSIONS FACTOR(LBS/UNIT)	ANNUAL AVERAGE EMISSIONS (LBS/YR)
	71432	05 C	9.10 E -02 C	1.08 E -01

ALLOWABLE EMIS LBS/YR(OPTIONAL):

CONTROL EQPT CODES PRIMARY	SECONDARY	OVERALL CONTROL EFF(%)	FULL/ PART	HOURLY MAX EMISSIONS (LBS/HOUR)
C	C	C	C	4.10 E -04

ACTION CODE	EMITTENT ID	EST METH	ACTUAL EMISSIONS FACTOR(LBS/UNIT)	ANNUAL AVERAGE EMISSIONS (LBS/YR)
		C	C	

ALLOWABLE EMIS LBS/YR(OPTIONAL):

CONTROL EQPT CODES PRIMARY	SECONDARY	OVERALL CONTROL EFF(%)	FULL/ PART	HOURLY MAX EMISSIONS (LBS/HOUR)
C	C	C	C	

NAME Lida Moussavian DATE NOV 09 1990

ARB/PRO 890327

EMISSION YEAR 1989

AIR TOXICS EMISSION DATA SYSTEM REVIEW AND UPDATE REPORT
PROCESS AND EMITTENTS DATA

FORM PRO SIDE A

FOR OFFICE USE ONLY

PROCESS DESCRIPTION: | C |

SCC NO:

COUNTY ID:

AIR BASIN:

ACTION CODE:

PROD1 (OPTIONAL):

PROD2 (OPTIONAL):

FACILITY ID:

STOP FILL OUT ANY SUPPLEMENTAL PROCESS FORM(S) FOR THIS PROCESS FIRST. THEN FILL OUT THIS PAGE, SUBMITTING ONE FOR EACH EMITTING PROCESS IN YOUR FACILITY.

SECTION 1
PROCESS DATA

DEVICE I.D.: 70016

SIC: 971

CONFIDENTIAL (Y/N) IF Y CHECK SMALL BOXES AS APPROPRIATE: N

PROCESS EQUIPMENT DESCRIPTION: BOILER | C |

FUEL TYPE /OTHER PROCESS INFO: NATURAL GAS | C |

NOTE USE 1 SPACE FOR EACH DECIMAL POINT

TOTAL YEARLY PROCESS RATE (UNITS/YR)	MAXIMUM HOURLY PROCESS RATE (UNITS/HR)	PROCESS UNITS	HRS/ DAY	DAYS/ WEEK	WKS/ YEAR
1.19	4.50 E -03	P T 074	08	07	20

RELATIVE MONTHLY ACTIVITY (%) C

JAN	FEB	MAR	APR	MAY	JUN	JUL	AUG	SEP	OCT	NOV	DEC
20.0	20.0	20.0	0.00	0.00	0.00	0.00	0.00	0.00	0.00	20.0	20.0

OFFICE USE ONLY

SECTION 2

ACTION CODE	EMITTENT ID	EST METH	ACTUAL EMISSIONS FACTOR(LBS/UNIT)	ANNUAL AVERAGE EMISSIONS (LBS/YR)	ALLOWABLE EMIS LBS/YR(OPTIONAL)	*CONTROL EQPT CODES* PRIMARY	SECONDARY	OVERALL CONTROL EFF(%)	FULL/ PART	HOURLY MAX EMISSIONS (LBS/HOUR)
	71432	05	9.10 E -02	1.08 E -01						4.10 E -04

NAME: Lida Moussavian

DATE: NOV 09 1990

ARB/PRC 890327

EMISSION YEAR 19 89

AIR TOXICS EMISSION DATA SYSTEM REVIEW AND UPDATE REPORT
PROCESS AND EMITTENTS DATA

FORM **PRO** SIDE A

FOR OFFICE USE ONLY

PROCESS DESCRIPTION: | C |

SCC NO:

COUNTY ID:

AIR BASIN:

ACTION CODE:

PROD1 (OPTIONAL):

PROD2 (OPTIONAL):

FACILITY ID:

STOP FILL OUT ANY SUPPLEMENTAL PROCESS FORM(S) FOR THIS PROCESS FIRST. THEN FILL OUT THIS PAGE. SUBMITTING ONE FOR EACH EMITTING PROCESS IN YOUR FACILITY.

SECTION 1
PROCESS DATA

DEVICE I.D.: 70017

SIC: 971

CONFIDENTIAL (Y/N) IF Y CHECK SMALL BOXES AS APPROPRIATE: N

PROCESS EQUIPMENT DESCRIPTION: BOILER | C |

FUEL TYPE /OTHER PROCESS INFO: NATURAL GAS | C |

NOTE USE 1 SPACE FOR EACH DECIMAL POINT

TOTAL YEARLY PROCESS RATE (UNITS/YR)	C	MAXIMUM HOURLY PROCESS RATE (UNITS/HR)	C	PROCESS UNITS	C	HRS/ DAY	C	DAYS/ WEEK	C	WKS/ YEAR	C
2.16		2.34 E -03		P T 074		12		06		50	

RELATIVE MONTHLY ACTIVITY (%) C

JAN	FEB	MAR	APR	MAY	JUN	JUL	AUG	SEP	OCT	NOV	DEC
8.33	8.33	8.33	8.33	8.33	8.33	8.33	8.33	8.33	8.33	8.33	8.33

OFFICE USE ONLY

SECTION 2

ACTION CODE	EMITTENT ID	EST METH	C	ACTUAL EMISSIONS FACTOR(LBS/UNIT)	C	ANNUAL AVERAGE EMISSIONS (LBS/YR)
	71432	05		9.10 E -02		1.97 E -01

ALLOWABLE EMIS LBS/YR(OPTIONAL)	*CONTROL EQPT CODES* PRIMARY	C	SECONDARY	C	OVERALL CONTROL EFF(%)	C	FULL/ PART	C	HOURLY MAX EMISSIONS (LBS/HOUR)
									2.13 E -04

ACTION CODE	EMITTENT ID	EST METH	C	ACTUAL EMISSIONS FACTOR(LBS/UNIT)	C	ANNUAL AVERAGE EMISSIONS (LBS/YR)

ALLOWABLE EMIS LBS/YR(OPTIONAL)	*CONTROL EQPT CODES* PRIMARY	C	SECONDARY	C	OVERALL CONTROL EFF(%)	C	FULL/ PART	C	HOURLY MAX EMISSIONS (LBS/HOUR)

ARB/PRO 890327

NAME Lida Moussavian DATE NOV 09 1990

EMISSION YEAR 1989

AIR TOXICS EMISSION DATA SYSTEM REVIEW AND UPDATE REPORT
PROCESS AND EMITTENTS DATA

FORM **PRO** SIDE A

FOR OFFICE USE ONLY

PROCESS DESCRIPTION: C

SCC NO:

COUNTY ID:

AIR BASIN:

ACTION CODE:

PROD1 (OPTIONAL):

PROD2 (OPTIONAL):

FACILITY ID:

STOP FILL OUT ANY SUPPLEMENTAL PROCESS FORM(S) FOR THIS PROCESS FIRST. THEN FILL OUT THIS PAGE. SUBMITTING ONE FOR EACH EMITTING PROCESS IN YOUR FACILITY.

SECTION 1 PROCESS DATA

DEVICE I.D.: 70018

SIC: 971

CONFIDENTIAL (Y/N) IF Y CHECK SMALL BOXES AS APPROPRIATE: N

PROCESS EQUIPMENT DESCRIPTION: BOILER C

FUEL TYPE /OTHER PROCESS INFO: NATURAL GAS C

NOTE USE 1 SPACE FOR EACH DECIMAL POINT

TOTAL YEARLY PROCESS RATE (UNITS/YR)	MAXIMUM HOURLY PROCESS RATE (UNITS/HR)	PROCESS UNITS	HRS/ DAY	DAYS/ WEEK	WKS/ YEAR
2.16 C	2.34 E -03 C	P T 074 C	12 C	06 C	50 C

RELATIVE MONTHLY ACTIVITY (%) C

JAN	FEB	MAR	APR	MAY	JUN	JUL	AUG	SEP	OCT	NOV	DEC
8.33	8.33	8.33	8.33	8.33	8.33	8.33	8.33	8.33	8.33	8.33	8.33

OFFICE USE ONLY

SECTION 2

EMITTENT DATA				EMISSIONS
EMITTENT ID	EST METH	ACTUAL EMISSIONS FACTOR(LBS/UNIT)		ANNUAL AVERAGE EMISSIONS (LBS/YR)
71432	05 C	9.10 E -02 C		1.97 E -01
CONTROL EQPT CODES PRIMARY	SECONDARY	OVERALL CONTROL EFF(%)	FULL/ PART	HOURLY MAX EMISSIONS (LBS/HOUR)
C	C	C	C	2.13 E -04
EMITTENT ID	EST METH	ACTUAL EMISSIONS FACTOR(LBS/UNIT)		ANNUAL AVERAGE EMISSIONS (LBS/YR)
	C	C		
CONTROL EQPT CODES PRIMARY	SECONDARY	OVERALL CONTROL EFF(%)	FULL/ PART	HOURLY MAX EMISSIONS (LBS/HOUR)
C	C	C	C	

ACTION CODE

ALLOWABLE EMIS LBS/YR(OPTIONAL)

ACTION CODE

ALLOWABLE EMIS LBS/YR(OPTIONAL)

ARB/PRO 890327

NAME Lida Moussavia

DATE NOV 09 1990

EMISSION YEAR 19 89

AIR TOXICS EMISSION DATA SYSTEM REVIEW AND UPDATE REPORT
PROCESS AND EMITTENTS DATA

FORM **PRO** SIDE A

FOR OFFICE USE ONLY

PROCESS DESCRIPTION: | C

SCC NO:

COUNTY ID:

AIR BASIN:

ACTION CODE:

PROD1 (OPTIONAL):

PROD2 (OPTIONAL):

FACILITY ID:

STOP FILL OUT ANY SUPPLEMENTAL PROCESS FORM(S) FOR THIS PROCESS FIRST. THEN FILL OUT THIS PAGE. SUBMITTING ONE FOR EACH EMITTING PROCESS IN YOUR FACILITY.

SECTION 1
PROCESS DATA

DEVICE I.D.: 70019

SIC: 971

CONFIDENTIAL (Y/N) IF Y CHECK SMALL BOXES AS APPROPRIATE: N

PROCESS EQUIPMENT DESCRIPTION: BOILER | C

FUEL TYPE /OTHER PROCESS INFO: NATURAL GAS | C

NOTE USE 1 SPACE FOR EACH DECIMAL POINT

TOTAL YEARLY PROCESS RATE (UNITS/YR)	MAXIMUM HOURLY PROCESS RATE (UNITS/HR)	PROCESS UNITS	HRS/ DAY	DAYS/ WEEK	WKS/ YEAR
2.91	6.60 E -03	P T 074	08	07	15

RELATIVE MONTHLY ACTIVITY (%)

JAN	FEB	MAR	APR	MAY	JUN	JUL	AUG	SEP	OCT	NOV	DEC
20.0	20.0	20.0	0.00	0.00	0.00	0.00	0.00	0.00	0.00	20.0	20.0

OFFICE USE ONLY

SECTION 2

ACTION CODE	EMITTENT ID	EST METH	ACTUAL EMISSIONS FACTOR(LBS/UNIT)	ANNUAL AVERAGE EMISSIONS (LBS/YR)	ALLOWABLE EMIS LBS/YR(OPTIONAL)
	71432	05	9.10 E -02	5.30 E -02	

CONTROL EQPT CODES PRIMARY	SECONDARY	OVERALL CONTROL EFF(%)	FULL/ PART	HOURLY MAX EMISSIONS (LBS/HOUR)
				6.01 E -04

ACTION CODE	EMITTENT ID	EST METH	ACTUAL EMISSIONS FACTOR(LBS/UNIT)	ANNUAL AVERAGE EMISSIONS (LBS/YR)	ALLOWABLE EMIS LBS/YR(OPTIONAL)

CONTROL EQPT CODES PRIMARY	SECONDARY	OVERALL CONTROL EFF(%)	FULL/ PART	HOURLY MAX EMISSIONS (LBS/HOUR)

NAME Lida Moussavian DATE NOV 09 1990

ARB/PRO 890327

EMISSION YEAR 19 89

AIR TOXICS EMISSION DATA SYSTEM REVIEW AND UPDATE REPORT
PROCESS AND EMITTENTS DATA

FORM **PRO** SIDE A

FOR OFFICE USE ONLY

PROCESS DESCRIPTION: C

SCC NO:

COUNTY ID:

AIR BASIN:

ACTION CODE:

PROD1 (OPTIONAL):

PROD2 (OPTIONAL):

FACILITY ID:

STOP FILL OUT ANY SUPPLEMENTAL PROCESS FORM(S) FOR THIS PROCESS FIRST. THEN FILL OUT THIS PAGE, SUBMITTING ONE FOR EACH EMITTING PROCESS IN YOUR FACILITY.

SECTION 1
PROCESS DATA

DEVICE I.D.: 70020

SIC: 971

CONFIDENTIAL (Y/N) IF Y CHECK SMALL BOXES AS APPROPRIATE: N

PROCESS EQUIPMENT DESCRIPTION: BOILER C

FUEL TYPE /OTHER PROCESS INFO: NATURAL GAS C

NOTE USE 1 SPACE FOR EACH DECIMAL POINT

TOTAL YEARLY PROCESS RATE (UNITS/YR)	MAXIMUM HOURLY PROCESS RATE (UNITS/HR)	PROCESS UNITS	HRS/ DAY	DAYS/ WEEK	WKS/ YEAR
2.91 C	6.60 E -30 C	P T 074 C	08 C	07 C	15 C

RELATIVE MONTHLY ACTIVITY (%) C

JAN	FEB	MAR	APR	MAY	JUN	JUL	AUG	SEP	OCT	NOV	DEC
20.0	20.0	20.0	0.00	0.00	0.00	0.00	0.00	0.00	0.00	20.0	20.0

OFFICE USE ONLY

SECTION 2

EMITTENT ID	EST METH	ACTUAL EMISSIONS FACTOR(LBS/UNIT)	ANNUAL AVERAGE EMISSIONS (LBS/YR)	*CONTROL EQPT CODES* PRIMARY	SECONDARY	OVERALL CONTROL EFF(%)	FULL/ PART	HOURLY MAX EMISSIONS (LBS/HOUR)	ACTION CODE	ALLOWABLE EMIS LBS/YR(OPTIONAL)
71432	05 C	9.10 E -02 C	5.30 E -02	C	C	C	C	6.01 E -04		
	C	C		C	C	C	C			

NAME: Lida Moussavian

DATE: NOV 09 1990

ARB/PRO 890327

EMISSION YEAR 19 89

AIR TOXICS EMISSION DATA SYSTEM REVIEW AND UPDATE REPORT
PROCESS AND EMITTENTS DATA

FORM PRO SIDE A

FOR OFFICE USE ONLY

PROCESS DESCRIPTION: C

SCC NO:

COUNTY ID:

AIR BASIN:

ACTION CODE:

PROD1 (OPTIONAL):

PROD2 (OPTIONAL):

FACILITY ID:

STOP FILL OUT ANY SUPPLEMENTAL PROCESS FORM(S) FOR THIS PROCESS FIRST. THEN FILL OUT THIS PAGE, SUBMITTING ONE FOR EACH EMITTING PROCESS IN YOUR FACILITY.

SECTION 1
PROCESS DATA

DEVICE I.D.: 70021

SIC: 971

CONFIDENTIAL (Y/N) IF Y CHECK SMALL BOXES AS APPROPRIATE: N

PROCESS EQUIPMENT DESCRIPTION: JET ENGINE TEST CELL C

FUEL TYPE /OTHER PROCESS INFO: JP - 5 JET FUEL C

NOTE USE 1 SPACE FOR EACH DECIMAL POINT

TOTAL YEARLY PROCESS RATE (UNITS/YR)	MAXIMUM HOURLY PROCESS RATE (UNITS/HR)	PROCESS UNITS	HRS/ DAY	DAYS/ WEEK	WKS/ YEAR
24.6 C	4.26 C	P T 024 C	08 C	05 C	52 C

RELATIVE MONTHLY ACTIVITY (%) C

JAN	FEB	MAR	APR	MAY	JUN	JUL	AUG	SEP	OCT	NOV	DEC
8.33	8.33	8.33	8.33	8.33	8.33	8.33	8.33	8.33	8.33	8.33	8.33

OFFICE USE ONLY

SECTION 2

EMITTENT DATA					EMISSIONS
EMITTENT ID	EST METH	ACTUAL EMISSIONS FACTOR(LBS/UNIT)			ANNUAL AVERAGE EMISSIONS (LBS/YR)
71432	05 C	2.60 E -01 C			6.39
CONTROL EQPT CODES PRIMARY	SECONDARY	OVERALL CONTROL EFF(%)	FULL/ PART		HOURLY MAX EMISSIONS (LBS/HOUR)
C	C	C	C		1.11
EMITTENT ID	EST METH	ACTUAL EMISSIONS FACTOR(LBS/UNIT)			ANNUAL AVERAGE EMISSIONS (LBS/YR)
7440382	05 C	6.30 E -02 C			1.55
CONTROL EQPT CODES PRIMARY	SECONDARY	OVERALL CONTROL EFF(%)	FULL/ PART		HOURLY MAX EMISSIONS (LBS/HOUR)
C	C	C	C		2.68 E-01

ACTION CODE

ALLOWABLE EMIS LBS/YR(OPTIONAL)

ACTION CODE

ALLOWABLE EMIS LBS/YR(OPTIONAL)

NAME Lida Moussav

DATE NOV 09 1990

ARB/PRO 890327

EMISSION YEAR 1989

AIR TOXICS EMISSION DATA SYSTEM REVIEW AND UPDATE REPORT
PROCESS AND EMITTENTS DATA
(ADDITIONAL EMITTENTS)

FORM **PRO** SIDE B

OFFICE USE ONLY
CO: _____
\CID _____

DEVICE ID: 70021

ACTION CODE	EMITTENT ID	EST METH	ACTUAL EMISSIONS FACTOR (LBS/UNIT)	ANNUAL AVERAGE EMISSIONS (LBS/YR)
	18540299	05	6.30 E-02	1.55 E-01

ALLOWABLE EMIS LBS/YR (OPTIONAL)	*CONTROL EQPT CODES* PRIMARY	SECONDARY	OVERALL CONTROL EFF(%)	FULL/ PART	HOURLY MAX EMISSIONS (LBS/HOUR)
					2.68 E-01

ACTION CODE	EMITTENT ID	EST METH	ACTUAL EMISSIONS FACTOR (LBS/UNIT)	ANNUAL AVERAGE EMISSIONS (LBS/YR)
	7440439	05	6.00 E-03	1.47 E-01

ALLOWABLE EMIS LBS/YR (OPTIONAL)	*CONTROL EQPT CODES* PRIMARY	SECONDARY	OVERALL CONTROL EFF(%)	FULL/ PART	HOURLY MAX EMISSIONS (LBS/HOUR)
					2.56 E-02

ACTION CODE	EMITTENT ID	EST METH	ACTUAL EMISSIONS FACTOR(LBS/UNIT)	ANNUAL AVERAGE EMISSIONS (LBS/YR)
	7439921	05	6.50 E-02	1.60

ALLOWABLE EMIS LBS/YR (OPTIONAL)	*CONTROL EQPT CODES* PRIMARY	SECONDARY	OVERALL CONTROL EFF(%)	FULL/ PART	HOURLY MAX EMISSIONS (LBS/HOUR)
					2.77 E-01

ACTION CODE	EMITTENT ID	EST METH	ACTUAL EMISSIONS FACTOR (LBS/UNIT)	ANNUAL AVERAGE EMISSIONS (LBS/YR)
	7440020	05	6.00 E-03	1.47 E-01

ALLOWABLE EMIS LBS/YR (OPTIONAL)	*CONTROL EQPT CODES* PRIMARY	SECONDARY	OVERALL CONTROL EFF(%)	FULL/ PART	HOURLY MAX EMISSIONS (LBS/HOUR)
					2.56 E-02

ACTION CODE	EMITTENT ID	EST METH	ACTUAL EMISSIONS FACTOR (LBS/UNIT)	ANNUAL AVERAGE EMISSIONS (LBS/YR)
	1210	05	5.72	1.41 E+02

ALLOWABLE EMIS LBS/YR (OPTIONAL)	*CONTROL EQPT CODES* PRIMARY	SECONDARY	OVERALL CONTROL EFF(%)	FULL/ PART	HOURLY MAX EMISSIONS (LBS/HOUR)
					2.44 E+02

ARB.PROB.8903.75

NAME Lida Moussavian DATE NOV 09 1990

EMISSION YEAR 19 89

AIR TOXICS EMISSION DATA SYSTEM REVIEW AND UPDATE REPORT
PROCESS AND EMITTENTS DATA

FORM **PRO** SIDE A

FOR OFFICE USE ONLY

PROCESS DESCRIPTION | C | SCC NO | COUNTY ID | AIR BASIN

ACTION CODE | PROD1 (OPTIONAL) | PROD2 (OPTIONAL) | FACILITY ID

STOP FILL OUT ANY SUPPLEMENTAL PROCESS FORM(S) FOR THIS PROCESS FIRST. THEN FILL OUT THIS PAGE. SUBMITTING ONE FOR EACH EMITTING PROCESS IN YOUR FACILITY.

SECTION 1
PROCESS DATA

DEVICE I.D.	SIC	CONFIDENTIAL (Y/N) IF Y CHECK SMALL BOXES AS APPROPRIATE
70022	971	N

PROCESS EQUIPMENT DESCRIPTION	FUEL TYPE /OTHER PROCESS INFO
JET ENGINE TEST CELL	JP-5 JET FUEL

NOTE USE 1 SPACE FOR EACH DECIMAL POINT

TOTAL YEARLY PROCESS RATE (UNITS/YR)	MAXIMUM HOURLY PROCESS RATE (UNITS/HR)	PROCESS UNITS	HRS/ DAY	DAYS/ WEEK	WKS/ YEAR
2.62 E +02	4.26	P T 024	08	05	52

RELATIVE MONTHLY ACTIVITY (%) C

JAN	FEB	MAR	APR	MAY	JUN	JUL	AUG	SEP	OCT	NOV	DEC
8.33	8.33	8.33	8.33	8.33	8.33	8.33	8.33	8.33	8.33	8.33	8.33

OFFICE USE ONLY

SECTION 2

ACTION CODE	EMITTENT ID	EST METH	ACTUAL EMISSIONS FACTOR(LBS/UNIT)	ANNUAL AVERAGE EMISSIONS (LBS/YR)
	71432	05	2.60 E -01	6.84 E+01

ALLOWABLE EMIS LBS/YR(OPTIONAL)	*CONTROL EQPT CODES* PRIMARY	SECONDARY	OVERALL CONTROL EFF(%)	FULL/ PART	HOURLY MAX EMISSIONS (LBS/HOUR)
					1.11

ACTION CODE	EMITTENT ID	EST METH	ACTUAL EMISSIONS FACTOR(LBS/UNIT)	ANNUAL AVERAGE EMISSIONS (LBS/YR)
	7440382	05	6.30 E -02	1.65 E+01

ALLOWABLE EMIS LBS/YR(OPTIONAL)	*CONTROL EQPT CODES* PRIMARY	SECONDARY	OVERALL CONTROL EFF(%)	FULL/ PART	HOURLY MAX EMISSIONS (LBS/HOUR)
					2.68 E-01

ARB/PRO.890327

NAME Lida Moussavian DATE NOV 09 1990

EMISSION YEAR 1989

AIR TOXICS EMISSION DATA SYSTEM REVIEW AND UPDATE REPORT
PROCESS AND EMITTENTS DATA
(ADDITIONAL EMITTENTS)

FORM **PRO** SIDE B

OFFICE USE ONLY
CO: _____
CID _____

DEVICE ID: 70022

ACTION CODE	EMITTENT ID	EST METH	ACTUAL EMISSIONS FACTOR (LBS/UNIT)	ANNUAL AVERAGE EMISSIONS (LBS/YR)
	18540299	05	6.30 E-02	1.65 E+01

ALLOWABLE EMIS LBS/YR (OPTIONAL)	*CONTROL EQPT CODES* PRIMARY	SECONDARY	OVERALL CONTROL EFF(%)	FULL/ PART	HOURLY MAX EMISSIONS (LBS/HOUR)
					2.68 E-01

ACTION CODE	EMITTENT ID	EST METH	ACTUAL EMISSIONS FACTOR (LBS/UNIT)	ANNUAL AVERAGE EMISSIONS (LBS/YR)
	7440439	05	6.00 E-03	1.57

ALLOWABLE EMIS LBS/YR (OPTIONAL)	*CONTROL EQPT CODES* PRIMARY	SECONDARY	OVERALL CONTROL EFF(%)	FULL/ PART	HOURLY MAX EMISSIONS (LBS/HOUR)
					2.56 E-02

ACTION CODE	EMITTENT ID	EST METH	ACTUAL EMISSIONS FACTOR(LBS/UNIT)	ANNUAL AVERAGE EMISSIONS (LBS/YR)
	7439921	05	6.50 E-02	1.71 E+01

ALLOWABLE EMIS LBS/YR (OPTIONAL)	*CONTROL EQPT CODES* PRIMARY	SECONDARY	OVERALL CONTROL EFF(%)	FULL/ PART	HOURLY MAX EMISSIONS (LBS/HOUR)
					2.77 E-01

ACTION CODE	EMITTENT ID	EST METH	ACTUAL EMISSIONS FACTOR (LBS/UNIT)	ANNUAL AVERAGE EMISSIONS (LBS/YR)
	7440020	05	6.00 E-03	1.57

ALLOWABLE EMIS LBS/YR (OPTIONAL)	*CONTROL EQPT CODES* PRIMARY	SECONDARY	OVERALL CONTROL EFF(%)	FULL/ PART	HOURLY MAX EMISSIONS (LBS/HOUR)
					2.56 E-02

ACTION CODE	EMITTENT ID	EST METH	ACTUAL EMISSIONS FACTOR (LBS/UNIT)	ANNUAL AVERAGE EMISSIONS (LBS/YR)
	1210	05	5.72	1.50 E+03

ALLOWABLE EMIS LBS/YR (OPTIONAL)	*CONTROL EQPT CODES* PRIMARY	SECONDARY	OVERALL CONTROL EFF(%)	FULL/ PART	HOURLY MAX EMISSIONS (LBS/HOUR)
					2.44 E+01

ARB.PROB.8903175

NAME Lida Moussavian

DATE NOV 09 1990

EMISSION YEAR 19 89

AIR TOXICS EMISSION DATA SYSTEM REVIEW AND UPDATE REPORT
PROCESS AND EMITTENTS DATA

FORM PRO SIDE A

FOR OFFICE USE ONLY

PROCESS DESCRIPTION: | C | SCC NO: | COUNTY ID: | AIR BASIN:

ACTION CODE | PROD1 (OPTIONAL) | PROD2 (OPTIONAL) | FACILITY ID:

STOP FILL OUT ANY SUPPLEMENTAL PROCESS FORM(S) FOR THIS PROCESS FIRST. THEN FILL OUT THIS PAGE. SUBMITTING ONE FOR EACH EMITTING PROCESS IN YOUR FACILITY.

SECTION 1
PROCESS DATA

DEVICE I.D.: 70024

SIC: 971

CONFIDENTIAL (Y/N) IF Y CHECK SMALL BOXES AS APPROPRIATE: N

PROCESS EQUIPMENT DESCRIPTION: SPRAY BOOTH C

FUEL TYPE /OTHER PROCESS INFO: PAINTS C

NOTE USE 1 SPACE FOR EACH DECIMAL POINT

TOTAL YEARLY PROCESS RATE (UNITS/YR)	MAXIMUM HOURLY PROCESS RATE (UNITS/HR)	PROCESS UNITS	HRS/ DAY	DAYS/ WEEK	WKS/ YEAR
50.0 C	1.00 C	P T 060 C	08 C	05 C	52 C

RELATIVE MONTHLY ACTIVITY (%) C

JAN	FEB	MAR	APR	MAY	JUN	JUL	AUG	SEP	OCT	NOV	DEC
8	4	12	4	12	4	6	16	16	10	4	4

OFFICE USE ONLY

SECTION 2

ACTION CODE	EMITTENT ID	EST METH	ACTUAL EMISSIONS FACTOR(LBS/UNIT)	ANNUAL AVERAGE EMISSIONS (LBS/YR)
	1210	08 C	3.80 E-01 C	1.90 E-01

ALLOWABLE EMIS LBS/YR(OPTIONAL)	*CONTROL EQPT CODES* PRIMARY	SECONDARY	OVERALL CONTROL EFF(%)	FULL/ PART	HOURLY MAX EMISSIONS (LBS/HOUR)
	001 C	C	C	F C	3.80 E-01

ACTION CODE	EMITTENT ID	EST METH	ACTUAL EMISSIONS FACTOR(LBS/UNIT)	ANNUAL AVERAGE EMISSIONS (LBS/YR)
		C	C	

ALLOWABLE EMIS LBS/YR(OPTIONAL)	*CONTROL EQPT CODES* PRIMARY	SECONDARY	OVERALL CONTROL EFF(%)	FULL/ PART	HOURLY MAX EMISSIONS (LBS/HOUR)
	C	C	C	C	

NAME Lida Moussavian DATE NOV 09 1990

ARB.PRC.89C32

B-4

EMISSION YEAR 19 89

AIR TOXICS EMISSION DATA SYSTEM REVIEW AND UPDATE REPORT
PROCESS AND EMITTENTS DATA

FORM PRO SIDE A

FOR OFFICE USE ONLY

PROCESS DESCRIPTION: | C

SCC NO:

COUNTY ID:

AIR BASIN:

ACTION CODE:

PROD1 (OPTIONAL):

PROD2 (OPTIONAL):

FACILITY ID:

STOP FILL OUT ANY SUPPLEMENTAL PROCESS FORM(S) FOR THIS PROCESS FIRST. THEN FILL OUT THIS PAGE. SUBMITTING ONE FOR EACH EMITTING PROCESS IN YOUR FACILITY.

SECTION 1
PROCESS DATA

DEVICE I.D.: 70026

SIC: 971

CONFIDENTIAL (Y/N) IF Y CHECK SMALL BOXES AS APPROPRIATE: N

PROCESS EQUIPMENT DESCRIPTION: SPRAY BOOTH | C

FUEL TYPE /OTHER PROCESS INFO: PAINTS | C

NOTE USE 1 SPACE FOR EACH DECIMAL POINT

TOTAL YEARLY PROCESS RATE (UNITS/YR)	MAXIMUM HOURLY PROCESS RATE (UNITS/HR)	PROCESS UNITS	HRS/ DAY	DAYS/ WEEK	WKS/ YEAR
50.0	1.00	P T 060	08	05	52

RELATIVE MONTHLY ACTIVITY (%) C

JAN	FEB	MAR	APR	MAY	JUN	JUL	AUG	SEP	OCT	NOV	DEC
8	4	12	4	12	4	6	16	16	10	4	4

OFFICE USE ONLY

SECTION 2

EMITTENT DATA					EMISSIONS
ACTION CODE	EMITTENT ID	EST METH	ACTUAL EMISSIONS FACTOR(LBS/UNIT)		ANNUAL AVERAGE EMISSIONS (LBS/YR)
	1210	08	3.80 E-01		1.90 E-01
ALLOWABLE EMIS LBS/YR(OPTIONAL)	*CONTROL EQPT CODES* PRIMARY	SECONDARY	OVERALL CONTROL EFF(%)	FULL/ PART	HOURLY MAX EMISSIONS (LBS/HOUR)
	001			F	3.80 E-01
ACTION CODE	EMITTENT ID	EST METH	ACTUAL EMISSIONS FACTOR(LBS/UNIT)		ANNUAL AVERAGE EMISSIONS (LBS/YR)
ALLOWABLE EMIS LBS/YR(OPTIONAL)	*CONTROL EQPT CODES* PRIMARY	SECONDARY	OVERALL CONTROL EFF(%)	FULL/ PART	HOURLY MAX EMISSIONS (LBS/HOUR)

NAME Lida Moussavian DATE NOV 09 1990

ARB PRC 89032

EMISSION YEAR 19 89

AIR TOXICS EMISSION DATA SYSTEM REVIEW AND UPDATE REPORT
PROCESS AND EMITTENTS DATA

FORM PRO SIDE A

FOR OFFICE USE ONLY

PROCESS DESCRIPTION: C

SCC NO:

COUNTY ID:

AIR BASIN:

ACTION CODE:

PROD1 (OPTIONAL):

PROD2 (OPTIONAL):

FACILITY ID:

STOP FILL OUT ANY SUPPLEMENTAL PROCESS FORM(S) FOR THIS PROCESS FIRST. THEN FILL OUT THIS PAGE. SUBMITTING ONE FOR EACH EMITTING PROCESS IN YOUR FACILITY.

SECTION 1
PROCESS DATA

DEVICE I.D.: 70044

SIC: 971

CONFIDENTIAL (Y/N) IF Y CHECK SMALL BOXES AS APPROPRIATE: N

PROCESS EQUIPMENT DESCRIPTION: STORAGE TANK C

FUEL TYPE /OTHER PROCESS INFO: GASOLINE C

NOTE USE 1 SPACE FOR EACH DECIMAL POINT

TOTAL YEARLY PROCESS RATE (UNITS/YR)	MAXIMUM HOURLY PROCESS RATE (UNITS/HR)	PROCESS UNITS	HRS/ DAY	DAYS/ WEEK	WKS/ YEAR
3.56 E -02 C	1.71 E -01 C	P T 031 C	08 C	05 C	52 C

RELATIVE MONTHLY ACTIVITY (%) C

JAN	FEB	MAR	APR	MAY	JUN	JUL	AUG	SEP	OCT	NOV	DEC
8.33	8.33	8.33	8.33	8.33	8.33	8.33	8.33	8.33	8.33	8.33	8.33

OFFICE USE ONLY

SECTION 2

EMITTENT DATA | EMISSIONS

ACTION CODE:

ALLOWABLE EMIS LBS/YR(OPTIONAL):

EMITTENT ID	EST METH	ACTUAL EMISSIONS FACTOR(LBS/UNIT)	ANNUAL AVERAGE EMISSIONS (LBS/YR)
71432	05 C	5.81 E -02 C	1.03

CONTROL EQPT CODES PRIMARY	SECONDARY	OVERALL CONTROL EFF(%)	FULL/ PART	HOURLY MAX EMISSIONS (LBS/HOUR)
027 C	C	95 C	f C	4.97 E -04

ACTION CODE:

ALLOWABLE EMIS LBS/YR(OPTIONAL):

EMITTENT ID	EST METH	ACTUAL EMISSIONS FACTOR(LBS/UNIT)	ANNUAL AVERAGE EMISSIONS (LBS/YR)
1210	05 C	0.00 C	0.00

CONTROL EQPT CODES PRIMARY	SECONDARY	OVERALL CONTROL EFF(%)	FULL/ PART	HOURLY MAX EMISSIONS (LBS/HOUR)
027 C	C	95 C	F C	0.00

ARB/PRO 890327

NAME Lida Moussavian DATE NOV 09 1990

EMISSION YEAR 19 89

AIR TOXICS EMISSION DATA SYSTEM REVIEW AND UPDATE REPORT
PROCESS AND EMITTENTS DATA

FORM **PRO** SIDE A

FOR OFFICE USE ONLY

PROCESS DESCRIPTION: | C | SCC NO: | COUNTY ID: | AIR BASIN:

ACTION CODE: | PROD1 (OPTIONAL): | PROD2 (OPTIONAL): | FACILITY ID:

STOP FILL OUT ANY SUPPLEMENTAL PROCESS FORM(S) FOR THIS PROCESS FIRST. THEN FILL OUT THIS PAGE. SUBMITTING ONE FOR EACH EMITTING PROCESS IN YOUR FACILITY.

SECTION 1
PROCESS DATA

DEVICE I.D.: 70053

SIC: 971

CONFIDENTIAL (Y/N) IF Y CHECK SMALL BOXES AS APPROPRIATE: N

PROCESS EQUIPMENT DESCRIPTION: STORAGE TANK C

FUEL TYPE /OTHER PROCESS INFO: GASOLINE C

NOTE USE 1 SPACE FOR EACH DECIMAL POINT

TOTAL YEARLY PROCESS RATE (UNITS/YR)	MAXIMUM HOURLY PROCESS RATE (UNITS/HR)	PROCESS UNITS	HRS/ DAY	DAYS/ WEEK	WKS/ YEAR
2.86 E -02 C	1.37 E -01 C	P T 031 C	08 C	05 C	52 C

RELATIVE MONTHLY ACTIVITY (%) C

JAN	FEB	MAR	APR	MAY	JUN	JUL	AUG	SEP	OCT	NOV	DEC
8.33	8.33	8.33	8.33	8.33	8.33	8.33	8.33	8.33	8.33	8.33	8.33

OFFICE USE ONLY

SECTION 2

ACTION CODE	EMITTENT ID	EST METH	ACTUAL EMISSIONS FACTOR(LBS/UNIT)	ANNUAL AVERAGE EMISSIONS (LBS/YR)	ALLOWABLE EMIS LBS/YR(OPTIONAL)
	71432	05 C	5.81 E -02 C	8.30 E -01	

CONTROL EQPT CODES PRIMARY	SECONDARY	OVERALL CONTROL EFF(%)	FULL/ PART	HOURLY MAX EMISSIONS (LBS/HOUR)
027 C	C	95 C	f C	4.00 E -04

ACTION CODE	EMITTENT ID	EST METH	ACTUAL EMISSIONS FACTOR(LBS/UNIT)	ANNUAL AVERAGE EMISSIONS (LBS/YR)	ALLOWABLE EMIS LBS/YR(OPTIONAL)
	1210	05 C	0.00 C	0.00	

CONTROL EQPT CODES PRIMARY	SECONDARY	OVERALL CONTROL EFF(%)	FULL/ PART	HOURLY MAX EMISSIONS (LBS/HOUR)
027 C	C	95 C	F C	0.00

ARB/PRO.890327

NAME Lida Moussavian DATE NOV 09 1990

EMISSION YEAR 19 89

AIR TOXICS EMISSION DATA SYSTEM REVIEW AND UPDATE REPORT
PROCESS AND EMITTENTS DATA

FORM **PRO** SIDE A

FOR OFFICE USE ONLY

PROCESS DESCRIPTION: | C

SCC NO:

COUNTY ID: | AIR BASIN:

ACTION CODE:

PROD1 (OPTIONAL): | PROD2 (OPTIONAL):

FACILITY ID:

STOP FILL OUT ANY SUPPLEMENTAL PROCESS FORM(S) FOR THIS PROCESS FIRST. THEN FILL OUT THIS PAGE. SUBMITTING ONE FOR EACH EMITTING PROCESS IN YOUR FACILITY.

SECTION 1
PROCESS DATA

DEVICE I.D.: 70054

SIC: 971

CONFIDENTIAL (Y/N) IF Y CHECK SMALL BOXES AS APPROPRIATE: N

PROCESS EQUIPMENT DESCRIPTION: STORAGE TANK | C

FUEL TYPE /OTHER PROCESS INFO: GASOLINE | C

NOTE USE 1 SPACE FOR EACH DECIMAL POINT

TOTAL YEARLY PROCESS RATE (UNITS/YR)	MAXIMUM HOURLY PROCESS RATE (UNITS/HR)	PROCESS UNITS	HRS/ DAY	DAYS/ WEEK	WKS/ YEAR
6.97 E -01	3.35 E -02	P T 031	08	05	52

RELATIVE MONTHLY ACTIVITY (%) C

JAN	FEB	MAR	APR	MAY	JUN	JUL	AUG	SEP	OCT	NOV	DEC
8.33	8.33	8.33	8.33	8.33	8.33	8.33	8.33	8.33	8.33	8.33	8.33

OFFICE USE ONLY

SECTION 2

EMITTENT ID	EST METH	ACTUAL EMISSIONS FACTOR(LBS/UNIT)	ANNUAL AVERAGE EMISSIONS (LBS/YR)	*CONTROL EQPT CODES* PRIMARY	SECONDARY	OVERALL CONTROL EFF(%)	FULL/ PART	HOURLY MAX EMISSIONS (LBS/HOUR)
71432	05	5.81 E -02	2.00 E -01	027		95	f	9.73 E -05
1210	05	0.00	0.00	027		95	F	0.00

ACTION CODE: | ALLOWABLE EMIS LBS/YR(OPTIONAL):

ACTION CODE: | ALLOWABLE EMIS LBS/YR(OPTIONAL):

NAME Lida Moussavian DATE NOV 09 1990

ARB/PRO.890327

EMISSION YEAR 19 89

AIR TOXICS EMISSION DATA SYSTEM REVIEW AND UPDATE REPORT
PROCESS AND EMITTENTS DATA

FORM **PRO** SIDE A

FOR OFFICE USE ONLY

PROCESS DESCRIPTION: C

SCC NO:

COUNTY ID:

AIR BASIN:

ACTION CODE:

PROD1 (OPTIONAL):

PROD2 (OPTIONAL):

FACILITY ID:

STOP FILL OUT ANY SUPPLEMENTAL PROCESS FORM(S) FOR THIS PROCESS FIRST. THEN FILL OUT THIS PAGE. SUBMITTING ONE FOR EACH EMITTING PROCESS IN YOUR FACILITY.

SECTION 1
PROCESS DATA

DEVICE I.D.: 70067

SIC: 971

CONFIDENTIAL (Y/N) IF Y CHECK SMALL BOXES AS APPROPRIATE: N

PROCESS EQUIPMENT DESCRIPTION: FUEL DISPENSER C

FUEL TYPE /OTHER PROCESS INFO: GASOLINE C

NOTE USE 1 SPACE FOR EACH DECIMAL POINT

TOTAL YEARLY PROCESS RATE (UNITS/YR)	MAXIMUM HOURLY PROCESS RATE (UNITS/HR)	PROCESS UNITS	HRS/ DAY	DAYS/ WEEK	WKS/ YEAR
3.56 E -02 C	1.71 E -01 C	P T 031 C	08 C	05 C	52 C

RELATIVE MONTHLY ACTIVITY (%) C

JAN	FEB	MAR	APR	MAY	JUN	JUL	AUG	SEP	OCT	NOV	DEC
8.33	8.33	8.33	8.33	8.33	8.33	8.33	8.33	8.33	8.33	8.33	8.33

OFFICE USE ONLY

SECTION 2

ACTION CODE	EMITTENT ID	EST METH	ACTUAL EMISSIONS FACTOR(LBS/UNIT)	ANNUAL AVERAGE EMISSIONS (LBS/YR)	ALLOWABLE EMIS LBS/YR(OPTIONAL)
	71432	05 C	7.70 E -02 (v)* 4.90 E -03 (1)* C	1.72 E -01	

CONTROL EQPT CODES PRIMARY	SECONDARY	OVERALL CONTROL EFF(%)	FULL/ PART	HOURLY MAX EMISSIONS (LBS/HOUR)
027 C	C	95 C	f C	5.88 E -04

ACTION CODE	EMITTENT ID	EST METH	ACTUAL EMISSIONS FACTOR(LBS/UNIT)	ANNUAL AVERAGE EMISSIONS (LBS/YR)	ALLOWABLE EMIS LBS/YR(OPTIONAL)
	1210	05 C	0.00 C	0.00	

CONTROL EQPT CODES PRIMARY	SECONDARY	OVERALL CONTROL EFF(%)	FULL/ PART	HOURLY MAX EMISSIONS (LBS/HOUR)
027 C	C	95 C	F C	0.00

NAME Lida Moussavian DATE NOV 09 1990

ARB/PRO 890327

* Two emission factors exist for vapor and liquid losses. (See Appendix B)

EMISSION YEAR 19 89

AIR TOXICS EMISSION DATA SYSTEM REVIEW AND UPDATE REPORT
PROCESS AND EMITTENTS DATA

FORM PRO SIDE A

FOR OFFICE USE ONLY

PROCESS DESCRIPTION: | C | SCC NO: | COUNTY ID: | AIR BASIN:

ACTION CODE | PROD1 (OPTIONAL) | PROD2 (OPTIONAL) | FACILITY ID:

STOP FILL OUT ANY SUPPLEMENTAL PROCESS FORM(S) FOR THIS PROCESS FIRST. THEN FILL OUT THIS PAGE, SUBMITTING ONE FOR EACH EMITTING PROCESS IN YOUR FACILITY.

SECTION 1
PROCESS DATA

DEVICE I.D.: 70068

SIC: 971

CONFIDENTIAL (Y/N) IF Y CHECK SMALL BOXES AS APPROPRIATE: N

PROCESS EQUIPMENT DESCRIPTION: FUEL DISPENSER

FUEL TYPE /OTHER PROCESS INFO: GASOLINE

NOTE USE 1 SPACE FOR EACH DECIMAL POINT

TOTAL YEARLY PROCESS RATE (UNITS/YR)	MAXIMUM HOURLY PROCESS RATE (UNITS/HR)	PROCESS UNITS	HRS/ DAY	DAYS/ WEEK	WKS/ YEAR
2.18 E -03	8.30 E -01	P T 031	10	07	52

RELATIVE MONTHLY ACTIVITY (%)

JAN	FEB	MAR	APR	MAY	JUN	JUL	AUG	SEP	OCT	NOV	DEC
8.33	8.33	8.33	8.33	8.33	8.33	8.33	8.33	8.33	8.33	8.33	8.33

OFFICE USE ONLY

SECTION 2

EMITTENT ID	EST METH	ACTUAL EMISSIONS FACTOR(LBS/UNIT)	ANNUAL AVERAGE EMISSIONS (LBS/YR)
71432	05	4.90 E -03 (1)* 7.70 E -02 (v)*	1.05 E -01

ACTION CODE | ALLOWABLE EMIS LBS/YR(OPTIONAL)

CONTROL EQPT CODES PRIMARY	SECONDARY	OVERALL CONTROL EFF(%)	FULL/ PART	HOURLY MAX EMISSIONS (LBS/HOUR)
027		95	f	4.13 E -03

EMITTENT ID	EST METH	ACTUAL EMISSIONS FACTOR(LBS/UNIT)	ANNUAL AVERAGE EMISSIONS (LBS/YR)
1210	05	0.00	0.00

ACTION CODE | ALLOWABLE EMIS LBS/YR(OPTIONAL)

CONTROL EQPT CODES PRIMARY	SECONDARY	OVERALL CONTROL EFF(%)	FULL/ PART	HOURLY MAX EMISSIONS (LBS/HOUR)
027		95	F	0.00

NAME Lida Moussavian DATE NOV 09 1990

ARB/PRO 890327

* Two emission factors exist for vapor and liquid losses. (See Appendix B)

EMISSION YEAR 19 89

AIR TOXICS EMISSION DATA SYSTEM REVIEW AND UPDATE REPORT
PROCESS AND EMITTENTS DATA

FORM **PRO** SIDE A

FOR OFFICE USE ONLY

PROCESS DESCRIPTION: C

SCC NO:

COUNTY ID:

AIR BASIN:

ACTION CODE:

PROD1 (OPTIONAL):

PROD2 (OPTIONAL):

FACILITY ID:

STOP FILL OUT ANY SUPPLEMENTAL PROCESS FORM(S) FOR THIS PROCESS FIRST. THEN FILL OUT THIS PAGE, SUBMITTING ONE FOR EACH EMITTING PROCESS IN YOUR FACILITY.

SECTION 1
PROCESS DATA

DEVICE I.D.: 70069

SIC: 971

CONFIDENTIAL (Y/N) IF Y CHECK SMALL BOXES AS APPROPRIATE: N

PROCESS EQUIPMENT DESCRIPTION: FUEL DISPENSER C

FUEL TYPE /OTHER PROCESS INFO: GASOLINE C

NOTE USE 1 SPACE FOR EACH DECIMAL POINT

TOTAL YEARLY PROCESS RATE (UNITS/YR)	MAXIMUM HOURLY PROCESS RATE (UNITS/HR)	PROCESS UNITS	HRS/ DAY	DAYS/ WEEK	WKS/ YEAR
1.18 E -03 C	2.35 E -01 C	P T 031 C	15 C	5 C	52 C

RELATIVE MONTHLY ACTIVITY (%) C

JAN	FEB	MAR	APR	MAY	JUN	JUL	AUG	SEP	OCT	NOV	DEC
8.33	8.33	8.33	8.33	8.33	8.33	8.33	8.33	8.33	8.33	8.33	8.33

OFFICE USE ONLY

SECTION 2

ACTION CODE	EMITTENT ID	EST METH	ACTUAL EMISSIONS FACTOR(LBS/UNIT)	ANNUAL AVERAGE EMISSIONS (LBS/YR)
	71432	05 C	4.90 E -03 (1)* C (7.70 E -02 (v)*)	5.70

ALLOWABLE EMIS LBS/YR(OPTIONAL)	*CONTROL EQPT CODES* PRIMARY	SECONDARY	OVERALL CONTROL EFF(%)	FULL/ PART	HOURLY MAX EMISSIONS (LBS/HOUR)
	027 C	C	95 C	f C	1.01 E -03

ACTION CODE	EMITTENT ID	EST METH	ACTUAL EMISSIONS FACTOR(LBS/UNIT)	ANNUAL AVERAGE EMISSIONS (LBS/YR)
	1210	05 C	0.00 C	0.00

ALLOWABLE EMIS LBS/YR(OPTIONAL)	*CONTROL EQPT CODES* PRIMARY	SECONDARY	OVERALL CONTROL EFF(%)	FULL/ PART	HOURLY MAX EMISSIONS (LBS/HOUR)
	027 C	C	95 C	F C	0.00

ARB/PRO.890327

NAME Lida Moussavian DATE NOV 09 1990

* Two Emission factors exist for vapor and liquid losses. (See Appendix B)

EMISSION YEAR 19 89

AIR TOXICS EMISSION DATA SYSTEM REVIEW AND UPDATE REPORT
PROCESS AND EMITTENTS DATA

FORM PRO SIDE A

FOR OFFICE USE ONLY

PROCESS DESCRIPTION: C

SCC NO:

COUNTY ID:

AIR BASIN:

ACTION CODE:

PROD1 (OPTIONAL):

PROD2 (OPTIONAL):

FACILITY ID:

STOP FILL OUT ANY SUPPLEMENTAL PROCESS FORM(S) FOR THIS PROCESS FIRST. THEN FILL OUT THIS PAGE. SUBMITTING ONE FOR EACH EMITTING PROCESS IN YOUR FACILITY.

SECTION 1
PROCESS DATA

DEVICE I.D.: 70070

SIC: 971

CONFIDENTIAL (Y/N) IF Y CHECK SMALL BOXES AS APPROPRIATE: N

PROCESS EQUIPMENT DESCRIPTION: FUEL DISPENSER C

FUEL TYPE /OTHER PROCESS INFO: GASOLINE C

NOTE USE 1 SPACE FOR EACH DECIMAL POINT

TOTAL YEARLY PROCESS RATE (UNITS/YR)	MAXIMUM HOURLY PROCESS RATE (UNITS/HR)	PROCESS UNITS	HRS/ DAY	DAYS/ WEEK	WKS/ YEAR
3.90 E -01 C	1.50 E -02 C	P T 031 C	10 C	05 C	52 C

RELATIVE MONTHLY ACTIVITY (%) C

JAN	FEB	MAR	APR	MAY	JUN	JUL	AUG	SEP	OCT	NOV	DEC
8.33	8.33	8.33	8.33	8.33	8.33	8.33	8.33	8.33	8.33	8.33	8.33

OFFICE USE ONLY

SECTION 2

EMITTENT DATA / EMISSIONS

ACTION CODE	EMITTENT ID	EST METH	ACTUAL EMISSIONS FACTOR(LBS/UNIT)	ANNUAL AVERAGE EMISSIONS (LBS/YR)
	71432	05 C	7.70 E -02 (v)* 4.90 E -03 (1)* C	1.88 E -01

ALLOWABLE EMIS LBS/YR(OPTIONAL)	*CONTROL EQPT CODES* PRIMARY	SECONDARY	OVERALL CONTROL EFF(%)	FULL/ PART	HOURLY MAX EMISSIONS (LBS/HOUR)
	027 C	C	95 C	f C	6.47 E -05

ACTION CODE	EMITTENT ID	EST METH	ACTUAL EMISSIONS FACTOR(LBS/UNIT)	ANNUAL AVERAGE EMISSIONS (LBS/YR)
	1210	05 C	0.00 C	0.00

ALLOWABLE EMIS LBS/YR(OPTIONAL)	*CONTROL EQPT CODES* PRIMARY	SECONDARY	OVERALL CONTROL EFF(%)	FULL/ PART	HOURLY MAX EMISSIONS (LBS/HOUR)
	027 C	C	95 C	F C	0.00

ARB/PRO 890327

NAME Lida Moussavian DATE NOV 09 1990

* Two emission factors exist for vapor and liquid losses. (See Appendix B)

EMISSION YEAR 19 89

AIR TOXICS EMISSION DATA SYSTEM REVIEW AND UPDATE REPORT
PROCESS AND EMITTENTS DATA

FORM **PRO** SIDE A

FOR OFFICE USE ONLY

PROCESS DESCRIPTION: | C | SCC NO: | COUNTY ID: | AIR BASIN:

ACTION CODE | PROD1 (OPTIONAL) | PROD2 (OPTIONAL) | FACILITY ID:

STOP FILL OUT ANY SUPPLEMENTAL PROCESS FORM(S) FOR THIS PROCESS FIRST. THEN FILL OUT THIS PAGE, SUBMITTING ONE FOR EACH EMITTING PROCESS IN YOUR FACILITY.

SECTION 1
PROCESS DATA

DEVICE I.D.: 70071

SIC: 971

CONFIDENTIAL (Y/N) IF Y CHECK SMALL BOXES AS APPROPRIATE: N

PROCESS EQUIPMENT DESCRIPTION: FUEL DISPENSER

FUEL TYPE /OTHER PROCESS INFO: GASOLINE

NOTE USE 1 SPACE FOR EACH DECIMAL POINT

TOTAL YEARLY PROCESS RATE (UNITS/YR)	MAXIMUM HOURLY PROCESS RATE (UNITS/HR)	PROCESS UNITS	HRS/ DAY	DAYS/ WEEK	WKS/ YEAR
3.90 E -01	1.50 E -02	P T 031	10	05	52

RELATIVE MONTHLY ACTIVITY (%)

JAN	FEB	MAR	APR	MAY	JUN	JUL	AUG	SEP	OCT	NOV	DEC
8.33	8.33	8.33	8.33	8.33	8.33	8.33	8.33	8.33	8.33	8.33	8.33

OFFICE USE ONLY

SECTION 2

EMITTENT ID	EST METH	ACTUAL EMISSIONS FACTOR(LBS/UNIT)	ANNUAL AVERAGE EMISSIONS (LBS/YR)	ACTION CODE	ALLOWABLE EMIS LBS/YR(OPTIONAL)
71432	05	7.70 E -02 (v)* 4.90 E -03 (1)*	1.88 E -01		

CONTROL EQPT CODES PRIMARY	SECONDARY	OVERALL CONTROL EFF(%)	FULL/ PART	HOURLY MAX EMISSIONS (LBS/HOUR)
027		95	f	6.47 E -05

EMITTENT ID	EST METH	ACTUAL EMISSIONS FACTOR(LBS/UNIT)	ANNUAL AVERAGE EMISSIONS (LBS/YR)	ACTION CODE	ALLOWABLE EMIS LBS/YR(OPTIONAL)
1210	05	0.00	0.00		

CONTROL EQPT CODES PRIMARY	SECONDARY	OVERALL CONTROL EFF(%)	FULL/ PART	HOURLY MAX EMISSIONS (LBS/HOUR)
027		95	F	0.00

NAME Lida Moussavian DATE NOV 09 1990

ARB/PRO 890327

* Two emission factor exist for vapor and liquid losses. (See Appendix B)

EMISSION YEAR 19 89	AIR TOXICS EMISSION DATA SYSTEM REVIEW & UPDATE REPORT SUPPLEMENTAL PROCESS PARAMETER FORM SUBSTANCES USED, PRODUCED, OR OTHERWISE PRESENT	FORM **S-UP**

FOR OFFICE USE ONLY
CO: AB:
FACID:

FACILITY NAME MARINE CORPS AIR STATION EL TORO

PLEASE COPY THIS FORM AS MANY TIMES AS NECESSARY FOR YOUR FACILITY
PLEASE READ THE INSTRUCTIONS BEFORE COMPLETING THIS FORM.

USE THIS FORM TO REPORT SUBSTANCES IN APPENDIX A-II WHICH ARE USED, PRODUCED, OR OTHERWISE PRESENT.

PLEASE INDICATE (Y/N) UNDER THE APPROPRIATE CATEGORIES (USE, PRODUCTION, OR OTHER PRESENCE WITHIN YOUR FACILITY) OF ANY SUBSTANCE(S) LISTED IN APPENDIX A-II. "USED" REFERS TO SUBSTANCES WHICH ARE INGREDIENTS IN ANY ACTIVITY OR PROCESS AT YOUR FACILITY. "PRODUCED" REFERS TO SUBSTANCES WHICH ARE THE RESULT OF ANY ACTIVITY OR PROCESS TAKING PLACE IN YOUR FACILITY. "OTHERWISE PRESENT" REFERS TO SUBSTANCES PRESENT IN ANY OTHER WAY IN AN ACTIVITY OR PROCESS, SUCH AS BY-PRODUCTS OR REACTION INTERMEDIATES WHICH APPEAR TEMPORARILY DURING PROCESSING. PLEASE SPECIFY THE NATURE OF THE PRESENCE OF THE SUBSTANCE.

ALSO USE THIS FORM TO REPORT SUBSTANCES IN APPENDIX A-I WHICH ARE PRESENT BELOW THE APPLICABLE DEGREE OF ACCURACY.

LISTED SUBSTANCE	*USED*	*PRODUCED*	*OTHERWISE PRESENT*	*(SPECIFY)*
AMMONIA	(X)	( )	( )	
FORMALDEHYDE	( )	(X)	( )	
LEAD COMPOUNDS	(X)	( )	( )	
SELENIUM	( )	(X)	( )	
TOLUENE	(X)	( )	( )	
ZINC	( )	(X)	( )	
	( )	( )	( )	
	( )	( )	( )	
	( )	( )	( )	
	( )	( )	( )	
	( )	( )	( )	
	( )	( )	( )	
	( )	( )	( )	
	( )	( )	( )	
	( )	( )	( )	
	( )	( )	( )	

NAME: Lida Moussavian DATE: NOV 09 1990

ARB.S-UP'89089

APPENDIX C

COPIES OF THE MATERIAL SAFETY DATA SHEETS

DEVICE 70029 - SPRAY GUN

8010-00-900-2338
white

Issue Date: April 25, 1988

MATERIAL SAFETY DATA SHEET

LINEAR DYNAMICS, INC.
1204 AIRPORT DRIVE
BALL GROUND, GA 30107

Emergency Telephone:
LDI - (404) 479-6515
CHEMTREC - (800) 424-9300

Material: TT-P-115F, I, Highway Traffic Paint
LDI Code: 115W008
Common Name: Traffic Paint, White

Formula: Complex mixture
CAS REG NO.: None assigned

I. COMPOSITIONAL INFORMATION

Hazardous Component	CAS #	Wt %	TLV	LEL	Vapor Pres.
1.Heptane	142-85-5	8.6	400	1.0	40
2.Toluene	108-88-3	1.6	100	1.2	22
3.1,1,1 Trichloroethane	71-55-6	17.8	400	NA	134
4.					
5.					

II. PHYSICAL PROPERTIES

Boiling Range: 160-232F
Vapor Density: greater than 1
% Volatile by Volume: 40.3%
Appearance/Odor: Thick whitish liquid with organic odor
Water Solubility: Not soluable

Weight per Gallon: 13.5
Evaporation Rate (BuOH=1): 4.5
VOC: 224g/1
Water Reactivity: None

III. FIRE AND EXPLOSION HAZARD INFORMATION

Flash Point: 15F
Extinguishing Media: Foam, CO_2, Halon, Water Fog
Fire Fighting Procedures: Evacuate unprotected personnel from immediate area. Wear protective equipment including NIOSH SCBA. Cool fire exposed containers with water. Contain run off.
Explosion Hazards: Keep area of use free from ignition sources. Closed containers may explode due to pressure buildup when exposed to extreme heat.

IV. REACTIVITY

Stability: Stable
Hazardous Decomposition Products: Carbon monoxide, carbon dioxide
Conditions to Avoid: Sparks, open flame, strong oxidizers
Materials to Avoid: Strong oxidizers, strong acids, strong bases, select amines. If material contains chlorinated solvents, avoid contact with aluminum.

Hazardous Polymerization: Will not occur

V. HEALTH HAZARD INFORMATION

Acute Overexposure:	Skin, eye, mucous membrane, and respiratory irritant, skin defatting agent. Narcosis in high concentrations
Chronic Overexposure:	May cause damage to CNS, respiratory system, blood, and internal organs
Listed Carcinogenic Components:	None

VI. FIRST AID PROCEDURES

Inhalation: Remove subject to fresh air. Restore breathing. Contact physician

Eyes: Flush copiusly with water, lifting lids. Contact physician if irritation persists.

Ingestion: Do not induce vomiting. Keep individual warm and quiet Contact physician.

Skin: Thoroughly wash exposed area with soap and water. Remove contaminated clothing and launder before reuse.

VII. SPILL OR LEAK PROCEDURES

Keep sources of ignition away from spill area. Dike and contain spill using inert material. Collect liquid and diking materials in approved recovery containers for recovery or disposal as a hazardous waste. Keep spills and cleanup run off out of contact with ground water and municipal sewers and water supplies.

VIII. SPECIAL PROTECTION INFORMATION

Ventilation:	Any explosion proof type which will keep vapor within TLV ranges
Respiratory:	NIOSH approved organic vapor respirator or mask
Eye:	Safety glasses, splash goggles, face shield, eye wash equipment
Skin:	Impermeable gloves, long sleeves and pants, leather shoes, aprons, safety shower or equivalent

IX. STORAGE AND HANDLING

Do not store above 140°F (60°C). Material may settle and seperate during storage - mix using explosion proof devices. Do not puncture or drop containers during handling as this may cause leaking. Handle using approved equipment or using proper personnel lifting techniques.

X. HMIS

Health: 2
Flammability: 3
Reactivity: 0
Personal Protection: H

Issue Date: April 25, 1988

MATERIAL SAFETY DATA SHEET

LINEAR DYNAMICS, INC.
1204 AIRPORT DRIVE
BALL GROUND, GA 30107

Emergency Telephone:
LDI - (404) 479-6515
CHEMTREC - (800) 424-9300

Material: TT-P-115F, I, Highway Traffic Paint
LDI Code: 115Y007
Common Name: Traffic Paint, Yellow

Formula: Complex mixture
CAS REG NO.: None assigned

I. COMPOSITIONAL INFORMATION

Hazardous Component	CAS #	Wt %	TLV	LEL	Vapor Pres.
1. Lead Sulfochromate	1344-37-2	7.4	10mg/Cu.M	NA	NA
2. Heptane	142-85-5	8.6	400	1.0	40
3. Toluene	108-88-3	1.6	100	1.2	22
4. 1,1,1Trichloroethane	71-55-6	17.8	400	NA	134
5.					

II. PHYSICAL PROPERTIES

Boiling Range: 160-232F
Vapor Density: greater than 1
% Volatile by Volume: 40.3%
Appearance/Odor: Thick yellowish liquid with organic odor
Water Solubility: Not soluable

Weight per Gallon: 13.6
Evaporation Rate (BuOH=1): 4.5
VOC: 224 g/l
Water Reactivity: None

III. FIRE AND EXPLOSION HAZARD INFORMATION

Flash Point: 15F
Extinguishing Media: Foam, CO_2, Halon, Water Fog
Fire Fighting Procedures: Evacuate unprotected personnel from immediate area. Wear protective equipment including NIOSH SCBA. Cool fire exposed containers with water. Contain run off.
Explosion Hazards: Keep area of use free from ignition sources. Closed containers may explode due to pressure buildup when exposed to extreme heat.

IV. REACTIVITY

Stability: Stable
Hazardous Polymerization: Will not occur
Hazardous Decomposition Products: Carbon monoxide, carbon dioxide
Conditions to Avoid: Sparks, open flame, strong oxidizers
Materials to Avoid: Strong oxidizers, strong acids, strong bases, select amines. If material contains chlorinated solvents, avoid contact with aluminum.

V. HEALTH HAZARD INFORMATION

Acute Overexposure:	Skin, eye, mucous membrane, and respiratory irritant, skin defatting agent. Narcosis in high concentrations
Chronic Overexposure:	May cause damage to CNS, respiratory system, blood, and internal organs
Listed Carcinogenic Components:	None

VI. FIRST AID PROCEDURES

Inhalation: Remove subject to fresh air. Restore breathing. Contact physician

Eyes: Flush copiusly with water, lifting lids. Contact physician if irritation persists.

Ingestion: Do not induce vomiting. Keep person warm and quiet. Contact physician.

Skin: Thoroughly wash exposed area with soap and water. Remove contaminated clothing and launder before reuse.

VII. SPILL OR LEAK PROCEDURES

Keep sources of ignition away from spill area. Dike and contain spill using inert material. Collect liquid and diking materials in approved recovery containers for recovery or disposal as a hazardous waste. Keep spills and cleanup run off out of contact with ground water and municipal sewers and water supplies.

VIII. SPECIAL PROTECTION INFORMATION

Ventilation: Any explosion proof type which will keep vapor within TLV ranges

Respiratory: NIOSH approved organic vapor respirator or mask

Eye: Safety glasses, splash goggles, face shield, eye wash equipment

Skin: Impermeable gloves, long sleeves and pants, leather shoes, aprons, safety shower or equivalent

IX. STORAGE AND HANDLING

Do not store above 140°F (60°C). Material may settle and seperate during storage - mix using explosion proof devices. Do not puncture or drop containers during handling as this may cause leaking. Handle using approved equipment or using proper personnel lifting techniques.

X. HMIS

Health:	2	**Reactivity:**	0
Flammability:	3	**Personal Protection:**	J

70024, 70026 - SPRAY BOOTHS

SEMI

Page: 1 MATERIAL SAFETY DATA SHEET 03/30/9

For Coatings, Resins and Related Materials

Prepared: 07/25/8

SECTION I - PRODUCT INDENTIFICATION

Manufacturer: DEFT, INC.
17451 VON KARMAN AVE.
IRVINE CA 92714

Information Phone: (714) 474-04
Emergency Phone:

Product Class: LACQUER
Trade Name : 27X38,CWF INT.SEMI-GLOSS - ES
Product Code : 111
C.A.S. Number: NONE

Hazard Ratings: Health -
none -> extreme Fire -
0 ---> 4 Reactivity -

SECTION II - HAZARDOUS INGREDIENTS

Ingredients	CAS #	Weight %	--- Exposure Limits ---- ACGIH/TLV	OSHA/PEL	VP mm H
ALIPHATIC HYDROCARBON	8052-41-3	15.	100 ppm	NOT ESTAB	12
		STEL=	NOT ESTAB	NOT ESTAB	
VM&P NAPHTHA - EC	64742-89-8	10.	300 ppm	300 ppm	26
		STEL=	400 ppm	400 ppm	
XYLENE	1330-20-7	< 5.	100 ppm	100 ppm	21
		STEL=	150 ppm	150 ppm	
ISOPROPANOL ANHYDROUS	67-63-0	< 5.	400 ppm	400 ppm	33
		STEL=	500 ppm	500 ppm	
n-BUTYL ALCOHOL	71-36-3	5.	50 ppm	100 ppm	4.4
		STEL=	NOT ESTAB	NOT ESTAB	
ISOBUTYL ISOBUTYRATE	97-85-8	15.	Undetermined		3.2
		STEL=	NOT ESTAB	NOT ESTAB	
METHYL n-AMYL KETONE	110-43-0	10.	50 ppm	100 ppm	2.1
		STEL=	100 ppm	100 ppm	
2-BUTOXYETHANOL	111-76-2	10.	25 ppm	50 ppm	.9
		STEL=	75 ppm	NOT ESTAB	

SECTION III - PHYSICAL DATA

Boiling Range: 181 - 340 Deg. F
Evap. Rate: 0.38 x n-Butyl Acetate
Volatiles volume: 81.8 %
Appearance: OPAQUE LIQUID WITH SOLVENT ODOR

Vapor Density: Heavier than Air.
Liquid Density: Lighter than Water.
Wgt per gallon: 7.53 Pounds.

SECTION IV - FIRE AND EXPLOSION HAZARD DATA

Flammability Class: 3 Flash Point: 53 F tcc LEL: 1. %

-EXTINGUISHING MEDIA:

FOAM, ALCOHOL FOAM, CO2, DRY CHEMICAL, WATER FOG

-SPECIAL FIREFIGHTING PROCEDURES:

Full fire fighting equipment with self-contained breathing apparatus and full protective clothing should be worn by fire fighters. Water may be used to cool closed containers to prevent pressure build-up, auto ignition or explosion.

SECTION IV - FIRE AND EXPLOSION HAZARD DATA (cont.)

-UNUSUAL FIRE & EXPLOSION HAZARDS:
Keep containers tightly closed. Isolate from heat, sparks, electrical equipment and open flame. Closed containers may explode when exposed to extreme heat. Application to hot surfaces requires special precautions. During emergency conditions overexposure to decomposition products may cause a health hazard. Symptoms may not be immediately apparent.

SECTION V - HEALTH HAZARD DATA

-PERMISSIBLE EXPOSURE LEVEL:
SEE SECTION II, HAZARDOUS INGREDIENTS.

-EFFECTS OF OVEREXPOSURE:
INHALATION: Irritation of the respiratory tract & acute nervous system depression characterized by the following progressive steps: headache, dizziness, staggering gait, confusion, unconsciousness or coma.

SKIN AND EYE CONTACT: SKIN: Contact with the skin can cause irritation. Symptoms may be swelling, redness, and rash.
EYES: Liquid, areosols, or vapors are irritating and may cause tearing, redness, and swelling accompanied by a stinging sensation.

SKIN ABSORPTION: Prolonged or repeated contact can cause moderate irritation, drying, and defatting of the skin which can cause the skin to crack.

INGESTION: Acute: Can result in irritation and possible corrosive action in the mouth, stomach tissue and digestive tract. Vomiting may cause aspiration of the solvent, resulting in chemical pneumonitis.

HEALTH HAZARDS (ACUTE AND CHRONIC)
ACUTE: Vapors are irritating to eyes, nose, and throat. Inhalation may cause headaches, difficult breathing and loss of consciousness.
CHRONIC: Prolonged contact will cause drying and cracking of the skin, due to defatting action. Skin sensitization, asthma or other allergic responses may develop.

CARCINOGENICITY:
NTP?: NO, IARC MONOGRAPHS?: NO, OSHA REGULATED?: NO

MEDICAL CONDITIONS GENERALLY AGGRAVATED BY EXPOSURE:
Asthma and any other respiratory disorders. Skin allergies, eczema, and dermititis.

SECTION V - HEALTH HAZARD DATA (cont.)

-FIRST AID:

INHALATION: Move to an area free from risk of further exposure. Restore breathing. Asthmatic type symptoms may develop and may be immediate or delayed by several hours. Obtain medical attention.

SKIN: Remove contaminated clothing. Wash affected areas thoroughly with soap and water. Wash contaminated clothing thoroughly before reuse.

EYES: Flush with clean lukewarm water (low pressure) for at least 15 minutes, occasionally lifting eyelids. Obtain medical attention.

INGESTION: Do not induce vomiting. Do not give anything to an unconscious person. Obtain medical attention.

SECTION VI - REACTIVITY DATA

STABLITY: [ ] Unstable [x] Stable
HAZARDOUS POLYMERIZATION: [ ] May occur [x] Will not occur

-INCOMPATIBILITY

STRONG OXIDIZING AGENTS. STRONG ACIDS.

-CONDITIONS TO AVOID:

HIGH TEMPERATURES, SPARKS, OR OPEN FLAMES.

-HAZARDOUS DECOMPOSITION PRODUCTS:

BY HIGH HEAT/TEMPERATURE: Carbon monoxide, carbon dioxide, and oxides of nitrogen.

SECTION VII - SPILL OR LEAK PROCEEDURES

-STEPS TO BE TAKEN IN CASE MATERIAL IS RELEASED OR SPILLED

Evacuate all non-essential personnel. Remove all sources of ignition (flame, spark sources, hot surfaces). Ventilate area Contain and remove with inert absorbent and non-sparking tools.

-WASTE DISPOSAL METHOD:

Waste must be disposed of in accordance with federal, state, and local environmental control regulations. Empty containers must be handled with care, due to product residue and flammable vapor DO NOT incinerate closed containers.
ALSO SEE SECTION IV, V, VI, FOR OTHER PRECAUTIONS.

SECTION VIII - SPECIAL PROTECTION INFORMATION:

-RESPIRATORY PROTECTION:

A respirator that is recommended or approved for use in an organic vapor environment (air purifying or fresh air supplied) is necessary. Observe OSHA regulations for respirator use. Ventilation should be provided to keep exposure levels below the OSHA permissible limits.

SECTION VIII - SPECIAL PROTECTION INFORMATION: (cont.)

-VENTILATION:
Exhaust ventilation sufficient to keep the airborne concentrations of solvent vapors or mists below their respective TLV's must be utilized. Remove all ignition sources (heat, sparks, flame, and hot surfaces).

-PROTECTIVE GLOVES:
Use (neoprene, rubber, polyethylene) gloves to prevent skin contact.

-EYE PROTECTION:
Use safety eyewear including splash guards or side shields, chemical goggles, or face shields.

-OTHER PROTECTIVE EQUIPMENT:
Use long sleeve and long leg clothing. Remove and wash contaminated clothing before reuse.

SECTION IX - SPECIAL PRECAUTIONS

-PRECAUTIONS TO BE TAKEN IN HANDLING AND STORING:
Store in buildings designed to comply with OSHA 1910.106
Avoid storing near high temperatures, fire, open flames, and spark sources. Store in tightly closed containers. Store in well ventilated areas.

-OTHER PRECAUTIONS:
Keep containers tight and upright to prevent leakage. Prevent prolonged breathing of vapors or spray mists. Prolonged overexposure may cause an allergic reaction. Aviod contact with skin and eyes. Do not take internally. Do not handle until the manufacturers safety precautions have been read and understood. Wash hands before eating, smoking, or using washroom. Smoke in smoking areas ONLY.

*** DISCLAIMER ***

Information contained herein is furnished without warranty of any kind. Employers should use this information only as a supplement to other information gathered by them and must make independent determinations of suitibility and completeness of information from all sources to assure proper use of the materials and for the safety and health of their employees.

This product may contain toxic chemicals subject to the reporting requirements of Section 313 of Title III of the Superfund Amendments and Reauthorization Act of 1986 & 40 CFR Part 372.

DOT #UN-1263
Actual VOC determined per ASTM D3960

MATERIAL SAFETY DATA SHEET

FOR COATINGS, RESINS, AND RELATED MATERIALS

DATE PREPARED: JULY 14, 1988

SECTION ONE - PRODUCT IDENTIFICATION

MANUFACTURER'S NAME, ADDRESS	HAZARD RATING
Vista Paint Corporation 2020 E. Orangethorpe Fullerton, CA 92631 EMERGENCY TELEPHONE NO. (714)680-3800	4-Extreme 3-High 2-Moderate 1-Slight 0-Insignificant FIRE 1 REACTIVITY 0 TOXICITY 1 SPECIAL
CHEMICAL NAME Acrylic Satin Enamel	
FORMULA 8000	CHEMICAL FAMILY Acrylic Copolymer
TRADE NAME and SYNOMYMS CAREFREE	

SECTION TWO - HAZARDOUS INGREDIENTS

MATERIAL	CAS NO	OSHA PEL	ACGIH TLV
Propylene Glycol	57-55-6	N/A	N/A
Ethylene Glycol	107-21-1	N/A	100 PPM
Texanol	25265-77-4	N/A	N/A
Ammonia	7664-41-7		25 PPM

SECTION THREE - PHYSICAL DATA

APPEARANCE, ODOR Liquid-mild odor		SOLUBILITY IN WATER YES	
BOILING POINT	250°F	SPECIFIC GRAVITY (H_2O=1)	1.356
VAPOR PRESSURE (mm Hg)	.02	% VOLATILE by VOLUME	60
VAPOR DENSITY (air=1) N/A		EVAPORATION RATE (butyl acetate=1) N/A	

SECTION FOUR - FIRE AND EXPLOSION HAZARDS

FLASH POINT	DOT CATEGORY	LEL%	UEL%
248°F	Non-flammable	.62	4.24

EXTINGUISHING MEDIA
Use foam, carbon dioxide, or dry chemical.

SPECIAL FIREFIGHTING PROCEDURES
Avoid confined spaces unless properly protected against potential irritating and toxic fumes.

UNUSUAL FIRE and EXPLOSION HAZARDS
Keep away from heat. Containers may explode when exposed to extreme heat.

SECTION FIVE - HEALTH HAZARDS

ROUTE OF ENTRY
Inhalation, skin contact, eye contact, and ingestion.

EFFECTS OF OVEREXPOSURE
Inhalation of high vapor concentrations may have results ranging from dizziness and headaches to unconsciousness.

EMERGENCY and FIRST AID PROCEDURES
If ingested,, drink water to dilute, DO NOT induce vomiting. Remove to fresh air, wash skin with soap and water. Flush exposed eyes with water for 15 minutes or until irritation subsides.

SECTION SIX - REACTIVITY

STABILITY (Stable, Unstable)	CONDITIONS TO AVOID
Stable	N/A

INCOMPATIBILITY (MATERIALS TO AVOID)
Strong Oxidizers

HAZARDOUS DECOMPOSITION PRODUCTS
Carbon Dioxide

HAZARDOUS POLYMERIZATION	CONDITIONS TO AVOID
Will not occur	Contact with strong oxidizers.

SECTION SEVEN - SPILL AND DISPOSAL PROCEDURES

STEPS TO BE TAKEN IN CASE MATERIAL IS RELEASED OR SPILLED
Clean spills immediately with absorbant such as clay or sand.

WASTE DISPOSAL METHOD
Dispose of material in accordance with local, state and federal regulations.

SECTION EIGHT - PROTECTIVE MEASURES

RESPIRATORY PROTECTION
Avoid excessive vapor inhalation. Use an approved NIOSH respirator if TLV is exceeded.

VENTILATION
Mechanical ventilation may be used if needed to control mist or vapor.

PROTECTIVE GLOVES
Avoid exposure or use Neoprene gloves.

EYE PROTECTION
Avoid exposure or use safety glasses or face shield.

OTHER PROTECTIVE EQUIPMENT

SECTION NINE - SPECIAL PRECAUTIONS

STORAGE AND HANDLING
Keep away from heat or flame.

OTHER PRECAUTIONS
Avoid unnecessary exposure.

MATERIAL SAFETY DATA SHEET

FOR COATINGS, RESINS, AND RELATED MATERIALS

DATE PREPARED: JULY 14, 1988

SECTION ONE - PRODUCT IDENTIFICATION

MANUFACTURER'S NAME, ADDRESS	HAZARD RATING		
Vista Paint Corporation 2020 E. Orangethorpe Fullerton, CA 92631	4-Extreme 3-High 2-Moderate 1-Slight 0-Insignificant	FIRE REACTIVITY TOXICITY SPECIAL	1 0 0
EMERGENCY TELEPHONE NO. (714)680-3800			

CHEMICAL NAME
Acrylic Gloss Enamel

FORMULA	CHEMICAL FAMILY
8400	

TRADE NAME and SYNONYMS
CAREFREE SEMI-GLOSS

SECTION TWO - HAZARDOUS INGREDIENTS

MATERIAL	CAS NO	OSHA PEL	ACGIH TLV
Propylene Glycol	57-55-6	N/A	N/A
Texanol	25265-77-4	N/A	N/A
Ammonia	7664-41-7	N/A	25 PPM

SECTION THREE - PHYSICAL DATA

APPEARANCE, ODOR		SOLUBILITY IN WATER	
Liquid-mild odor		YES	
BOILING POINT	250°F	SPECIFIC GRAVITY (H_2O=1)	1.428
VAPOR PRESSURE (mm Hg)	.02	% VOLATILE by VOLUME	50
VAPOR DENSITY (air=1) N/A		EVAPORATION RATE (butyl acetate=1) N/A	

SECTION FOUR - FIRE AND EXPLOSION HAZARDS

FLASH POINT	DOT CATEGORY	LEL%	UEL%
248°F	Non-flammable	.62	4.24

EXTINGUISHING MEDIA
Use foam, carbon dioxide, or dry chemical.

SPECIAL FIREFIGHTING PROCEDURES
Avoid confined spaces unless properly protected against potential irritating and toxic fumes.

UNUSUAL FIRE and EXPLOSION HAZARDS
Keep away from heat. Containers may explode when exposed to extreme heat.

SECTION FIVE - HEALTH HAZARDS

ROUTE OF ENTRY
Inhalation, skin contact, eye contact, and ingestion.

EFFECTS OF OVEREXPOSURE
Inhalation of high vapor concentrations may have results ranging from dizziness and headaches to unconsciousness.

EMERGENCY and FIRST AID PROCEDURES
If ingested,, drink water to dilute, DO NOT induce vomiting. Remove to fresh air, wash skin with soap and water. Flush exposed eyes with water for 15 minutes or until irritation subsides.

SECTION SIX - REACTIVITY

STABILITY (Stable, Unstable)	CONDITIONS TO AVOID
Stable	N/A

INCOMPATIBILITY (MATERIALS TO AVOID)
Strong Oxidizers

HAZARDOUS DECOMPOSITION PRODUCTS
Carbon Dioxide

HAZARDOUS POLYMERIZATION	CONDITIONS TO AVOID
Will not occur	Contact with strong oxidizers.

SECTION SEVEN - SPILL AND DISPOSAL PROCEDURES

STEPS TO BE TAKEN IN CASE MATERIAL IS RELEASED OR SPILLED
Clean spills immediately with absorbant such as clay or sand.

WASTE DISPOSAL METHOD
Dispose of material in accordance with Local, County, State and Federal regulations.

SECTION EIGHT - PROTECTIVE MEASURES

RESPIRATORY PROTECTION
Avoid excessive vapor inhalation. Use an approved NIOSH respirator if TLV is exceeded.

VENTILATION
Mechanical ventilation may be used if needed to control mist or vapor.

PROTECTIVE GLOVES
Avoid exposure or use Neoprene gloves.

EYE PROTECTION
Avoid exposure or use safety glasses or face shield.

OTHER PROTECTIVE EQUIPMENT

SECTION NINE - SPECIAL PRECAUTIONS

STORAGE AND HANDLING
Do not store at high temperatures.

OTHER PRECAUTIONS
Avoid unnecessary exposure.

MATERIAL SAFETY DATA SHEET

FOR COATINGS, RESINS, AND RELATED MATERIALS

DATE PREPARED: JULY 14, 1988

SECTION ONE - PRODUCT IDENTIFICATION

MANUFACTURER'S NAME, ADDRESS

Vista Paint Corporation
2020 E. Orangethorpe
Fullerton, CA 92631

EMERGENCY TELEPHONE NO.
(714)680-3800

HAZARD RATING

4-Extreme	FIRE	1
3-High	REACTIVITY	0
2-Moderate	TOXICITY	1
1-Slight	SPECIAL	
0-Insignificant		

CHEMICAL NAME
Acrylic Flat

FORMULA
400

CHEMICAL FAMILY
Acrylic

TRADE NAME and SYNOMYMS
ACRIPOXY

SECTION TWO - HAZARDOUS INGREDIENTS

MATERIAL	CAS NO	OSHA PEL	ACGIH TLV
Ethylene Glycol	107-21-1	N/A	100 PPM
Texanol	25265-77-4	N/A	N/A

SECTION THREE - PHYSICAL DATA

APPEARANCE, ODOR
Liquid-Mild odor

SOLUBILITY IN WATER
YES

BOILING POINT	250°F	SPECIFIC GRAVITY (H_2O=1)	1.392
VAPOR PRESSURE (mm Hg)	.02	% VOLATILE by VOLUME	61%

VAPOR DENSITY (air=1)
N/A

EVAPORATION RATE (butyl acetate=1)
N/A

SECTION FOUR - FIRE AND EXPLOSION HAZARDS

FLASH POINT	DOT CATEGORY	LEL%	UEL%
248°F	Non-flammable	.62	4.24

EXTINGUISHING MEDIA
Use foam, carbon dioxide, or dry chemical.

SPECIAL FIREFIGHTING PROCEDURES
Avoid confined spaces unless properly protected against potential irritating and toxic fumes.

UNUSUAL FIRE and EXPLOSION HAZARDS
Keep away from heat. Containers may explode when exposed to extreme heat.

SECTION FIVE - HEALTH HAZARDS

ROUTE OF ENTRY
Inhalation, skin contact, eye contact, and ingestion.

EFFECTS OF OVEREXPOSURE
Inhalation of high vapor concentrations may have results ranging from dizziness and headaches to unconsciousness.

EMERGENCY and FIRST AID PROCEDURES
If ingested, drink water to dilute, DO NOT induce vomiting. Remove to fresh air, wash skin with soap and water. Flush exposed eyes with water for 15 minutes or until irritation subsides.

SECTION SIX - REACTIVITY

STABILITY (Stable, Unstable)	CONDITIONS TO AVOID
Stable	N/A

INCOMPATIBILITY (MATERIALS TO AVOID)
Strong oxidizers

HAZARDOUS DECOMPOSITION PRODUCTS
Carbon Dioxide

HAZARDOUS POLYMERIZATION	CONDITIONS TO AVOID
Will not occur	Contact with strong oxidizers

SECTION SEVEN - SPILL AND DISPOSAL PROCEDURES

STEPS TO BE TAKEN IN CASE MATERIAL IS RELEASED OR SPILLED
Clean spills immediately with absorbant such as clay or sand

WASTE DISPOSAL METHOD
Dispose of in accordance with Local, State, and Federal regulations.

SECTION EIGHT - PROTECTIVE MEASURES

RESPIRATORY PROTECTION
Avoid excessive vapor inhalation. Use an approved NIOSH respirator if TLV is exceeded.

VENTILATION
Mechanical ventilation may be used if needed to control mist or vapor.

PROTECTIVE GLOVES
Avoid exposure or use Neoprene gloves

EYE PROTECTION
Avoid exposure or use safety glasses or face shield

OTHER PROTECTIVE EQUIPMENT

SECTION NINE - SPECIAL PRECAUTIONS

STORAGE AND HANDLING
Keep away from heat or flame.

OTHER PRECAUTIONS
Avoid unnecessary exposure.

Gloss

MATERIAL SAFETY DATA SHEET

For Coatings, Resins and Related Materials

Printed : 07/05/9
Revised : 07/07/8

SECTION I - PRODUCT INDENTIFICATION

Manufacturer: DEFT, INC.
17451 VON KARMAN AVE.
IRVINE CA 92714

Information Phone: (714) 474-04
Emergency Phone:

Product Class: LACQUER
Trade Name : 27X37, CLEAR WOOD FINISH GLOSS
Product Code : 010
C.A.S. Number: NONE

Hazard Ratings: Health -
none -> extreme Fire -
0 ---> 4 Reactivity -

SECTION II - HAZARDOUS INGREDIENTS

Ingredients	CAS #	Weight %	--- Exposure Limits ---- ACGIH/TLV	OSHA/PEL	VP mm
ALIPHATIC HYDROCARBON	8052-41-3	15.	100 ppm	NOT ESTAB	12
			STEL= NOT ESTAB	NOT ESTAB	
VM&P NAPHTHA - EC	64742-89-8	10.	300 ppm	300 ppm	26
			STEL= 400 ppm	400 ppm	
XYLENE	1330-20-7	< 5.	100 ppm	100 ppm	21
			STEL= 150 ppm	150 ppm	
ISOPROPANOL ANHYDROUS	67-63-0	< 5.	400 ppm	400 ppm	33
			STEL= 500 ppm	500 ppm	
n-BUTYL ALCOHOL	71-36-3	5.	50 ppm	100 ppm	4.
			STEL= NOT ESTAB	NOT ESTAB	
ISOBUTYL ISOBUTYRATE	97-85-8	10.	Undetermined		3.
			STEL= NOT ESTAB	NOT ESTAB	
METHYL n-AMYL KETONE	110-43-0	10.	50 ppm	100 ppm	2.
			STEL= 100 ppm	100 ppm	
2-BUTOXYETHANOL	111-76-2	10.	25 ppm	50 ppm	.
			STEL= 75 ppm	NOT ESTAB	
BUTYL CELLOSOLVE ACETATE	112-07-2	< 5.	Undetermined		.
			STEL= NOT ESTAB	NOT ESTAB	

SECTION III - PHYSICAL DATA

Boiling Range: 181 - 367 Deg. F
Evap. Rate: 0.39 x n-Butyl Acetate
Volatiles volume: 80.4 %

Vapor Density: Heavier than Air.
Liquid Density: Lighter than Wate
Wgt per gallon: 7.58 Pounds.
Spec. Gravity: 0.91

Appearance: AMBER LIQUID WITH SOLVENT ODOR

SECTION IV - FIRE AND EXPLOSION HAZARD DATA

Flammability Class: 3 Flash Point: 53 F tcc LEL: 0.88%

-EXTINGUISHING MEDIA:

FOAM, ALCOHOL FOAM, CO2, DRY CHEMICAL, WATER FOG

SECTION IV - FIRE AND EXPLOSION HAZARD DATA (cont.)

-SPECIAL FIREFIGHTING PROCEDURES:
Full fire fighting equipment with self-contained breathing apparatus and full protective clothing should be worn by fire fighters. Water may be used to cool closed containers to prevent pressure build-up, auto ignition or explosion.

-UNUSUAL FIRE & EXPLOSION HAZARDS:
Keep containers tightly closed. Isolate from heat, sparks, electrical equipment and open flame. Closed containers may explode when exposed to extreme heat. Application to hot surfaces requires special precautions. During emergency conditions overexposure to decomposition products may cause a health hazard. Symptoms may not be immediately apparent.

SECTION V - HEALTH HAZARD DATA

-PERMISSIBLE EXPOSURE LEVEL:
SEE SECTION II, HAZARDOUS INGREDIENTS.

-EFFECTS OF OVEREXPOSURE:
INHALATION: Irritation of the respiratory tract & acute nervous system depression characterized by the following progressive steps: headache, dizziness, staggering gait, confusion, unconsciousness or coma.

SKIN AND EYE CONTACT: SKIN: Contact with the skin can cause irritation. Symptoms may be swelling, redness, and rash.
EYES: Liquid, aerosols, or vapors are irritating and may cause tearing, redness, and swelling accompanied by a stinging sensation.

SKIN ABSORPTION: Prolonged or repeated contact can cause moderate irritation, drying, and defatting of the skin which can cause the skin to crack.

INGESTION: Acute: Can result in irritation and possible corrosive action in the mouth, stomach tissue and digestive tract. Vomiting may cause aspiration of the solvent, resulting in chemical pneumonitis.

HEALTH HAZARDS (ACUTE AND CHRONIC)
ACUTE: Vapors are irritating to eyes, nose, and throat. Inhalation may cause headaches, difficult breathing and loss of consciousness.
CHRONIC: Prolonged contact will cause drying and cracking of the skin, due to defatting action. Skin sensitization, asthma or other allergic responses may develop.

CARCINOGENICITY:
NTP?: NO, IARC MONOGRAPHS?: NO, OSHA REGULATED?: NO

MEDICAL CONDITIONS GENERALLY AGGRAVATED BY EXPOSURE:
Asthma and any other respiratory disorders. Skin allergies, eczema, and dermititis.

DEFT, INC.
Material Safety Data Sheet for: (010)

SECTION V - HEALTH HAZARD DATA (cont.)

-FIRST AID:

INHALATION: Move to an area free from risk of further exposure. Restore breathing. Asthmatic type symptoms may develop and may be immediate or delayed by several hours. Obtain medical attention.

SKIN: Remove contaminated clothing. Wash affected areas thoroughly with soap and water. Wash contaminated clothing thoroughly before reuse.

EYES: Flush with clean lukewarm water (low pressure) for at least 15 minutes, occasionally lifting eyelids. Obtain medical attention.

INGESTION: Do not induce vomiting. Do not give anything to an unconscious person. Obtain medical attention.

SECTION VI - REACTIVITY DATA

STABLITY: [ ] Unstable [x] Stable
HAZARDOUS POLYMERIZATION: [ ] May occur [x] Will not occur

-INCOMPATIBILITY

STRONG OXIDIZING AGENTS. STRONG ACIDS.

-CONDITIONS TO AVOID:

HIGH TEMPERATURES, SPARKS, OR OPEN FLAMES.

-HAZARDOUS DECOMPOSITION PRODUCTS:

BY HIGH HEAT/TEMPERATURE: Carbon monoxide, carbon dioxide, and oxides of nitrogen.

SECTION VII - SPILL OR LEAK PROCEEDURES

-STEPS TO BE TAKEN IN CASE MATERIAL IS RELEASED OR SPILLED

Evacuate all non-essential personnel. Remove all sources of ignition (flame, spark sources, hot surfaces). Ventilate area Contain and remove with inert absorbent and non-sparking tools.

-WASTE DISPOSAL METHOD:

Waste must be disposed of in accordance with federal, state, and local environmental control regulations. Empty containers must be handled with care, due to product residue and flammable vapor DO NOT incinerate closed containers.
ALSO SEE SECTION IV, V, VI, FOR OTHER PRECAUTIONS.

SECTION VIII - SPECIAL PROTECTION INFORMATION:

-RESPIRATORY PROTECTION:

A respirator that is recommended or approved for use in an organic vapor environment (air purifying or fresh air supplied) is necessary. Observe OSHA regulations for respirator use. Ventilation should be provided to keep exposure levels below the OSHA permissible limits.

DEFT, INC.
Material Safety Data Sheet for: (010)

SECTION VIII - SPECIAL PROTECTION INFORMATION: (cont.)

-VENTILATION:
Exhaust ventilation sufficient to keep the airborne concentrations of solvent vapors or mists below their respective TLV's must be utilized. Remove all ignition sources (heat, sparks, flame, and hot surfaces).

-PROTECTIVE GLOVES:
Use (neoprene, rubber, polyethylene) gloves to prevent skin contact.

-EYE PROTECTION:
Use safety eyewear including splash guards or side shields, chemical goggles, or face shields.

-OTHER PROTECTIVE EQUIPMENT:
Use long sleeve and long leg clothing. Remove and wash contaminated clothing before reuse.

SECTION IX - SPECIAL PRECAUTIONS

-PRECAUTIONS TO BE TAKEN IN HANDLING AND STORING:
Store in buildings designed to comply with OSHA 1910.106 Avoid storing near high temperatures, fire, open flames, and spark sources. Store in tightly closed containers. Store in well ventilated areas.

-OTHER PRECAUTIONS:
Keep containers tight and upright to prevent leakage. Prevent prolonged breathing of vapors or spray mists. Prolonged overexposure may cause an allergic reaction. Aviod contact with skin and eyes. Do not take internally. Do not handle until the manufacturers safety precautions have been read and understood. Wash hands before eating, smoking, or using washroom. Smoke in smoking areas ONLY.

*** DISCLAIMER ***

Information contained herein is furnished without warranty of any kind. Employers should use this information only as a supplement to other information gathered by them and must make independent determinations of suitibility and completeness of information from all sources to assure proper use of the materials and for the safety and health of their employees.

This product may contain toxic chemicals subject to the reporting requirements of Section 313 of Title III of the Superfund Amendments and Reauthorization Act of 1986 & 40 CFR Part 372.

DOT #UN-1263
Actual VOC determined per ASTM D3960

MATERIAL SAFETY DATA SHEET

FOR COATINGS, RESINS, AND RELATED MATERIALS

DATE PREPARED: JULY 14, 1988

SECTION ONE - PRODUCT IDENTIFICATION

MANUFACTURER'S NAME, ADDRESS	HAZARD RATING		
Vista Paint Corporation 2020 E. Orangethorpe Fullerton, CA 92631	4-Extreme 3-High 2-Moderate 1-Slight 0-Insignificant	FIRE REACTIVITY TOXICITY SPECIAL	1 0 1
EMERGENCY TELEPHONE NO. (714)680-3800			

CHEMICAL NAME
Acrylic Primer

FORMULA	CHEMICAL FAMILY
300	Acrylic Copolymer

TRADE NAME and SYNOMYMS
Basecoat

SECTION TWO - HAZARDOUS INGREDIENTS

MATERIAL	CAS NO	OSHA PEL	ACGIH TLV
Ethylene Glycol	107-21-1	N/A	100 PPM
Ammonia	7664-41-7	N/A	25 PPM
Texanol	25265-77-4	N/A	N/A

SECTION THREE - PHYSICAL DATA

APPEARANCE, ODOR		SOLUBILITY IN WATER	
Liquid-Mild Odor		yes	
BOILING POINT	250°F	SPECIFIC GRAVITY (H_2O=1)	1.334
VAPOR PRESSURE (mm Hg)	.02	% VOLATILE by VOLUME	60%
VAPOR DENSITY (air=1) N/A		EVAPORATION RATE (butyl acetate=1) N/A	

SECTION FOUR - FIRE AND EXPLOSION HAZARDS

FLASH POINT	DOT CATEGORY	LEL%	UEL%
248°F	Non-flammable	.62	4.24

EXTINGUISHING MEDIA
Use foam, CO_2, or dry chemicals.

SPECIAL FIREFIGHTING PROCEDURES
Avoid confined spaces unless properly protected against potential irritating and toxic fumes.

UNUSUAL FIRE and EXPLOSION HAZARDS
Keep away from heat. Containers may explode when exposed to extreme heat.

SECTION FIVE - HEALTH HAZARDS

ROUTE OF ENTRY
Inhalation, skin contact, eye contact, and ingestion.

EFFECTS OF OVEREXPOSURE
Inhalation of high vapor concentrations may have results ranging from dizziness and headaches to unconsciousness.

EMERGENCY and FIRST AID PROCEDURES
If ingested, drink water to dilute, DO NOT induce vomiting. Remove to fresh air, wash skin with soap and water. Flush exposed eyes with water for 15 minutes or until irritation subsides.

SECTION SIX - REACTIVITY

STABILITY (Stable, Unstable)	CONDITIONS TO AVOID
Stable	N/A

INCOMPATIBILITY (MATERIALS TO AVOID)
Strong oxidizers

HAZARDOUS DECOMPOSITION PRODUCTS
CO_2

HAZARDOUS POLYMERIZATION	CONDITIONS TO AVOID
Will not occur	Contact with strong oxidizers

SECTION SEVEN - SPILL AND DISPOSAL PROCEDURES

STEPS TO BE TAKEN IN CASE MATERIAL IS RELEASED OR SPILLED
Clean spills immediately with absorbant such as clay or sand.

WASTE DISPOSAL METHOD
Dispose of material in accordance with Local, County, State, and Federal regulations.

SECTION EIGHT - PROTECTIVE MEASURES

RESPIRATORY PROTECTION
Avoid excessive vapor inhalation. NIOSH approved respirator.

VENTILATION
Mechanical ventilation may be used if needed to control mist or irritation.

PROTECTIVE GLOVES
Neoprene gloves to reduce irritation.

EYE PROTECTION
Safety glasses or face shield

OTHER PROTECTIVE EQUIPMENT

SECTION NINE - SPECIAL PRECAUTIONS

STORAGE AND HANDLING
Do not store at high temperatures.

OTHER PRECAUTIONS
Avoid unnecessary exposure.

MSDS NO. 3

MATERIAL SAFETY DATA SHEET

LACQUER THINNERS AND CLEANING SOLVENTS

September 1, 1985

Section I

Manufacturer
E. I. du Pont de Nemours & Co. (Inc.)
Finishes & Fabricated Products Dept.
Wilmington, Delaware 19898
Telephone: Product information (800) 441-7515
Medical emergency (800) 441-3637
Transportation emergency (800) 424-9300 (CHEMTREC)

Product: Lacquer Thinners and Cleaning Solvents
D.O.T. Hazard Class: Flammable Liquid
Paint Related Material NA 1263

Section II — Hazardous Ingredients (See Section X for specific product codes)

Ingredients	CAS No.	Vapor Pressure (20°C mm Hg.)	Exposure Limits*
1. Butyl acetate	123-86-4	8	150ppm-A,O
2. n-Butyl alcohol	71-36-3	4	25ppm-D, 100ppm O
3. Acetone	67-64-1	185	750ppm-A, 1000ppm O
4. Methanol	67-56-1	96	200ppm-A,O
5. Toluene	108-88-3	29	100ppm-A 200ppm-O
6. Isopropyl alcohol	67-63-0	31	400ppm-A,O
7. Dibasic esters			
a) Dimethyl glutarate	1119-40-0	14 (at 100°C)	10mg/m³-D
b) Dimethyl succinate	106-65-0		
c) Dimethyl adipate	627-93-0		
8. 1-Methoxy-2-propanol acetate	108-65-6	2.4	100ppm-D
9. 2-Ethoxy butyl acetate	112-07-02	0.3	25ppm-D
10. Xylene	1330-20-7	8	100ppm-A,O
11. VM&P Naphtha	64742-89-8	~45	100ppm-A,O
12. Mineral Spirits	64742-88-7	~5	100ppm-A,O
13. Aromatic hydro-carbons	64742-95-6	~5	50ppm-A,O

*A = ACGIH TLV O = OSHA D = Du Pont internal limit.

Section III — Physical Data

Evaporation rate: Slower than ether

Vapor density: Heavier than air

Solubility in water: Slight

Percent volatile by volume: 100% (3929S — 93%)

Approximate boiling range: 129°F-437°F

Density: 6.4-7.5 #/gallon

Section IV: Fire & Explosion Data

Flash point (Method): 20-73F (Closed cup).
Approx. flammable limits: 1.1-14%.
Extinguishing media: Foam, carbon dioxide, dry chemical
Special fire fighting procedures: Full protective equipment, including self-contained breathing apparatus, is recommended. Water from fog nozzles may be used to cool closed containers to prevent pressure build up.
Unusual fire & explosion hazards: When heated above the flash point, emits flammable vapors which, when mixed with air, can burn or be explosive. Fine mists or sprays may be flammable at temperatures below the flash point.

Section V — Health Hazard Data

Ingestion: Gastro-intestinal distress.
In the unlikely event of ingestion, call a physician immediately and have names of ingredients available.
Inhalation: May cause nose and throat irritation. May cause nervous system depression characterized by the following progressive steps: Headache, dizziness, nausea, staggering gait, confusion, unconsciousness. 1-Methoxy-2-propanol acetate and n-butyl alcohol may cause moderate eye burning and can be absorbed through the skin in harmful amounts. Laboratory studies with rats have shown that petroleum distillates cause kidney damage and kidney or liver tumors. These effects were not seen in similar studies with guinea pigs, dogs, or monkeys. Several studies evaluating petroleum workers have not shown significant increases of kidney damage nor kidney or liver tumors. Excessive human exposure to methanol including absorption through the skin may lead to: fatigue, headache, anaesthetic neurologic effects, and visual difficulties, ultimately including blindness. Extremely high concentrations of butyl acetate have caused blood changes and weakness in laboratory animals. Reports have associated repeated and prolonged overexposure to solvents with permanent brain and nervous system damage. Dibasic esters inhalation overexposure in rats has shown mild injury to the olfactory region of the nose. 2-Ethoxy butyl acetate can be absorbed through the skin in harmful amounts. In studies in laboratory animals has produced damage to red blood cells and kidneys. If affected by inhalation of vapor or spray mist, remove to fresh air. If breathing difficulty persists, or occurs later, consult a physician.
Skin or eye contact: May cause irritation or burning of the eyes. Repeated or prolonged liquid contact may cause skin irritation with discomfort and dermatitis.
In case of eye contact, immediately flush with plenty of water for at least 15 minutes; call a physician.
In case of skin contact, wash with soap and water. If irritation occurs, contact a physician.

Section IX — Special Precautions — Continued

Other precautions: Do not sand, flame cut, braze or weld dry coating without a NIOSH/MSHA approved respirator or appropriate ventilation.

Section X — Notes

Product Code	Additional Ingredients	Product Code	Additional Ingredients
401L,402L	4, 11, 12	447L	1, 7, 8, 9, 12, 13
405L	12	450L	3, 10, 12
406L	6, 11, 12	451L	2, 3, 12
411L, 412L, 413L	1, 7	452L	2, 12
417L	8,11	453L	1, 10, 12
420L	9	454L	13
428L	10, 12	465L	9, 12, 13, 14, 15, 16
434L	11	467L	11, 12
436L	2, 5, 12	475L	8, 9, 12, 13, 15, 16
437L	2, 5, 11	485L	1, 7, 9, 13, 14
442L	1	494L, 495L	1, 7

Additional Ingredients	CAS No.	Vapor Pressure (20°C mm Hg.)	Exposure Limits*
(1) VM&P Naphtha	64742-89-8	~45	100ppm-A,O

Laboratory studies with rats have shown that petroleum distillates cause kidney damage and kidney or liver tumors. These effects were not seen in similar studies with guinea pigs, dogs, or monkeys. Several studies evaluating petroleum workers have not shown significant increases of kidney damage nor kidney or liver tumors.

(2) Lead Chromate	18454-12-1	None	50ug/m³-O as LEAD 150ug/m³-A as LEAD 0.05mg/m³-A as CR 0.1 mg/m³-O as CR

Lead chromate is an IARC/OSHA carcinogen. Overexposure to lead may cause adverse effects to the blood forming, nervous, urinary and reproductive systems including embryotoxic effects. Symptoms may include loss of appetite, anemia, disturbance of sleep and fatigue. (See OSHA Standard 29CFR1910.1025 for more information on lead)

(3) Antimony	7440-36-0	None	0.5mg/m³-A as Sb

Excessive exposures to antimony may produce gastrointestinal upset, nervous complaints, inflammation of the mucous membranes of the nose and throat, metallic taste and stomatitis. May cause skin irritation. Antimony is present in lead chromate. See lead chromate (2).

(4) Titanium Dioxide	13463-67-7	None	10mg/m³-A, 15mg/m³-O

In a lifetime inhalation test, lung cancers were found in some rats exposed to 250 mg/m³ respirable titanium dioxide dust. Analysis of the titanium dioxide concentrations in the rats' lungs showed that the lung clearance mechanism was overwhelmed and that the results at the massive 250 mg/m³ level are not relevant to the workplace

(5) Lead Molybdate	7439-98-7	None	10mg/m³-A as MO

(See also lead in ingredient (2))

(6) Carbon Black	1333-86-4	None	3.5mg/m³-A
(7) Aluminum	7429-90-5	None	10mg/m³-A
(8) Butyl Acetate	123-86-4	8	150ppm-A,O

Extremely high concentrations of butyl acetate have caused blood changes and weakness in laboratory animals.

(9) Isopropyl Alcohol	67-63-0	44	400ppm-A,O
(10) Methanol	67-56-1	125	200ppm-A,O

Excessive human exposure to methanol, including absorption through the skin, may lead to: fatigue, headache, anesthetic neurologic effects, and visual difficulties ultimately including blindness

(11) Methyl Isobutyl Ketone	108-10-1	20	50ppm-A,150ppm-O
(12) Ethyl Acetate	141-78-6	74	400ppm-A

Repeated exposures of laboratory animals to extremely high concentrations of ethyl acetate resulted in secondary anemia with an increase in white blood cells; fatty degeneration, cloudy swelling and an excess of blood in various organs.

(13) Acetone	67-64-1	186	750ppm-A,1000ppm-O
(14) Methyl Ethyl Ketone	78-93-3	95	200ppm-A,O

High concentrations of methyl ethyl ketone have caused embryotoxic effects in laboratory animals. Methyl ethyl ketone may cause abnormal kidney function.

(15) Dibasic Esters			
a.) Dimethyl glutarate	119-40-0	14 (at 100°C)	10mg/m³-D
b.) Dimethyl succinate	106-65-0		
c.) Dimethyl adipate	627-93-0		

Inhalation overexposure in rats has shown mild injury to the olfactory region of the nose.

(16) 465L, 475L Do not contain primary amyl acetate or xylene

*A = ACGIH TLV O = OSHA D = Du Pont internal limit

The data in this material safety data sheet relate only to the specific material designated herein and do not relate to use in combination with any other material or in any process.

Product Manager
Refinish Sales

Printed In U.S.A.

Paint + Spray

PRODUCT ▶	A.G.L. LACQUER THINNER-66
CHEMICAL FAMILY ▶	ketone, alcohol, ester, hydrocarbon solvents
SIC ▶	Misc. chemicals
LL CODE ▶	none
C.A.S. NUMBER ▶	

SMELL 713-672-0481
CHEMTREC 800-424-9300

HAZARD RATING
LEAST 0 SLIGHT 1
MODERATE 2 HIGH 3 EXTREME 4

HEALTH	1
FIRE	3
REACTIVITY	0

% COMPOSITION	TOXICITY DATA
DMK-25 IPA-20 SUPVMP-66-40 XYLENE*[illegible] TOLUENE-[illegible] NBAC-[illegible] 1[illegible]	Oral LD_{50} (rat) = 7.4g/kg Dermal LD_{50} (rabbit) = 3.24g/kg Inhalation LC_{50} (rat) = >32,000ppm/4 hours

SECTION III HEALTH INFORMATION

Eye contact: Liquid is moderately irritating to the eyes. High vapor concentrations may produce eye irritation.

Skin contact: Liquid is mildly irritating to the skin. Prolonged and repeated contact can cause dryness and may result in dermatitis.

Inhalation: High vapor concentrations may irritate the nose and throat. Prolonged exposure to very high concentrations may progressively cause headache, dizziness, nausea and unconsciousness.

Ingestion: Swallowing large quantities may result in dizziness, nausea and unconsciousness.

SECTION IV OCCUPATIONAL EXPOSURE LIMITS

OSHA-PEL/TWA = 1000ppm
ACGIH-TLV/TWA = 750ppm
-TLV/STEL = 1000ppm

CT: Remove contaminated clothing, shoes and leather goods and water. Do not reuse clothing until cleaned. If persistent irritation occurs, get medical attention.

ATION: Remove victim to fresh air and provide oxygen if breathing is difficult. Give artificial respiration if not breathing. Get medical attention.

GI ION: Do not give liquids if victim is unconscious or very drowsy. Otherwise, give no more than 2 glasses of water and induce vomiting by giving 30cc (2 tablespoons) Syrup of Ipecac.* If Ipecac is unavailable, give 2 glasses of water and induce vomiting by touching finger to back of victim's throat. Keep victim's head below hips while vomiting. Get medical attention.

OTE TO THE PHYSICIAN: If victim is a child, give no more than 1 ass of water and 15cc (1 tablespoon) Syrup of Ipecac. If symptoms such loss of gag reflex, convulsions or unconsciousness occur before emesis, stric lavage should be considered following intubation with a cuffed dotracheal tube.

SECTION VI — PHYSICAL DATA

OILING POINT (°F)	133	MELTING POINT (°F)	-139	VAPOR PRESSURE (mmHg)	186 @ 68°F
SPECIFIC GRAVITY (H_2O = 1)	0.8@60/60°F	% VOLATILE BY VOLUME	100	VAPOR DENSITY (AIR = 1)	2.0
OLUBILITY IN WATER	complete	EVAPORATION RATE (BUTYL ACETATE = 1)	5.6		

PEARANCE AND ODOR

ess, mobile liquid. Mild odor.

SECTION VII — FIRE AND EXPLOSION HAZARDS

ASH POINT AND METHOD USED	FLAMMABLE LIMITS, % VOLUME IN AIR	LOWER	UPPER
15°F (TCC)		2.6	12.8

TINGUISHING MEDIA

se water fog, "alcohol" foam, dry chemical or CO_2.

PECIAL FIRE FIGHTING PROCEDURES AND PRECAUTIONS

anger. Extremely Flammable. Clear fire area of unprotected personnel nd isolate. Do not enter confined fire space without full bunker gear helmet with face shield, bunker coats, gloves and rubber boots), ncluding a positive pressure NIOSH approved self-contained breathing pparatus. Cool fire exposed containers with water.

NUSUAL FIRE AND EXPLOSION HAZARDS

ontainers exposed to intense heat from fires should be cooled with ater to prevent vapor pressure buildup which could result in container upture. Container areas exposed to direct flame contact should be ooled with large quantities of water as needed to prevent weakening of ontainer structure.

CONDITIONS AND MATERIALS TO AVOID

Keep liquid and vapor away from heat, sparks, and flame. Keep away from strong oxidizing agents. Prevent vapor accumulation.

HAZARDOUS DECOMPOSITION PRODUCTS

Carbon monoxide and unidentified organic compounds may be formed during combustion.

SECTION IX EMPLOYEE PROTECTION

RESPIRATORY PROTECTION

If exposure may or does exceed occupational exposure limits (Sec.IV) use a NIOSH-approved respirator to prevent overexposure. In accord with 29 CFR 1910.134 use either an atmosphere-supplying respirator or an air-purifying respirator for organic vapors.

PROTECTIVE CLOTHING

Wear gloves and other protective clothing as required to minimize skin contact. Wear safety glasses or goggles to avoid eye contact.

ADDITIONAL PROTECTIVE MEASURES

Use explosion-proof ventilation as required to control vapor concentrations.

SECTION X ENVIRONMENTAL PROTECTION

SPILL OR LEAK PROCEDURES

DANGER! EXTREMELY FLAMMABLE. Eliminate all ignition sources. Handling equipment must be grounded to prevent sparking.
Large spills: Isolate the hazard area and deny entry to unnecessary personnel. Wear appropriate respirator and protective clothing. Shut off source of leak only if safe to do so. Dike and contain. Water fog may be useful in suppressing vapor cloud; contain run-off. Remove with vacuum trucks or pump to storage/salvage vessels. Soak up residue with an absorbent such as clay, sand or other suitable material; place in non-leaking containers for proper disposal. Flush area with water to remove trace residue; dispose of flush solutions as above.
Small spills: take up with an absorbent material and place in non-leaking containers; seal tightly for proper disposal.

WASTE DISPOSAL

Place in a disposal facility approved under RCRA regulations for hazardous waste (See Sec. XIII). Use non-leaking containers, seal tightly and label properly.

ENVIRONMENTAL HAZARDS

Releases to the environment may be reportable under environmental regulations. See p. 4 - S.XIII for additional information.

MATERIAL SAFETY DATA SHEET

MSDS NUMBER ▶ 5,380-3

97005 (REV. 11-84)

SECTION XI — SPECIAL PRECAUTIONS

NGER! EXTREMELY FLAMMABLE. Keep liquid and vapor away from heat, sparks d flame. Surfaces that are sufficiently hot may ignite even liquid tal in the absence of sparks or flame. Do NOT cut, drill, grind or eld on or near container; even emptied containers can contain explosive apors. Ground all fixed equipment. Bond and ground transfer containers nd equipment.

apors may accumulate and travel to ignition sources distant from the handling site; flashfire can result. Keep container tightly closed. Use with dequate ventilation.

ARNING! CAUSES EYE IRRITATION. Avoid contact with eyes. Avoid prolonged r repeated contact with skin. Avoid prolonged or repeated breathing of apor. Wash thoroughly after handling. Air-dry contaminated clothing in a ell ventilated area, then launder before reusing.

SECTION XII — TRANSPORTATION REQUIREMENTS

DEPARTMENT OF ANSPORTATION LASSIFICATION ▶

[X] FLAMMABLE LIQUID	[ ] COMBUSTIBLE LIQUID	[ ] OXIDIZING MATERIAL	[ ] NON-FLAMMABLE GAS
[ ] FLAMMABLE SOLID	[ ] POISON,CLASS A	[ ] CORROSIVE MATERIAL	[ ] NOT HAZARDOUS BY D.O.T. REGULATIONS
[ ] FLAMMABLE GAS	[ ] POISON,CLASS B	[ ] IRRITATING MATERIAL	[ ] OTHER—Specify below

D.T. PROPER SHIPPING NAME

cetone

THER REQUIREMENTS

.O.T. ID.# = UN 1090. Guide Sheet 26.

SECTION XIII — SUPPLEMENTARY HEALTH/REGULATORY INFORMATION

PA - Resource Conservation and Recovery Act
f acetone becomes a waste material, it would be a hazardous waste 40 CFR 261.33), hazardous waste number U002.

PA - Comprehensive Environmental Response, Compensation and Liability Act eleases to air, land or water are reportable under CERCLA ("Superfund") hen the release exceeds the reportable quantity.

Information contained herein is based on data considered rate, however, no warranty is expressed or implied regard the accuracy of these data or the results to be obtained from use thereof.
Seller assumes no responsibility for injury to vendee or third ons proximately caused by the material if reasonable safety edures are not adhered to as stipulated in the data sheet tionally, vendor assumes no responsibility for injury to ee or third persons proximately caused by abnormal use of ever if reasonable safety procedures are followed vendee assumes the risk in his use of the material.

BE SAFE
READ OUR PRODUCT SAFETY INFORMATION ... AND PASS IT ON
"PRODUCT LIABILITY LAW REQUIRES IT"

Manufacturer
A. G. LAYNE I.C.
4578 Brazil St.
LOS ANGELES, CALIF. 90039

DATE PREPARED
10-26-84

APPENDIX D

COPY OF THE AIR TOXIC EMISSIONS INVENTORY PLAN

SOUTH COAST AIR QUALITY MANAGEMENT DISTRICT

9150 Flair Drive
El Monte, CA 91731

AB 2588 TOXICS INVENTORY PLAN
APPLICATION FORM

Company Name: MARINE CORPS AIR STATION EL TORO

Mailing Address: FACILITIES MANAGEMENT DEPT (1JG)
MCAS EL TORO (SANTA ANA) CA 92709-5001

Facility Address: MCAS EL TORO (SANTA ANA) CA 92709-5001

Facility ID #: 006281

Contact Person: MR. SAM LAMB

Telephone #: (714) 726-6607

Signature of Responsible Person:

J. R. APPLEGATE, LCDR, CEC, USNR
Deputy Director, Facilities Mgmt. Dept.
By direction of Commanding General

GGW

EMISSION INVENTORY PLAN

MARINE CORPS AIR STATION

EL TORO AND TUSTIN

EMITTING SOURCE-BOILER

I. DEVICE NUMBER(s):

A. MCAS EL TORO

1. 181342 (Bldg. 57)
2. 181343 (Bldg. 94)
3. 181344 (Bldg. 296)
4. 181345 (Bldg. 296)
5. 181346 (Bldg. 297)
6. 181347 (Bldg. 297)
7. 181348 (Bldg. 327)
8. 181349 (Bldg. 372)
9. 181350 (Bldg. 369)
10. 181351 (Bldg. 375)
11. 181352 (Bldg. 457)
12. 181353 (Bldg. 634)
13. 181354 (Bldg. 662)
14. 181355 (Bldg. 662)
15. 181356 (Bldg. 733)
16. 181357 (Bldg. 733)
17. 181364 (bldg. 439)
18. 181365 (Bldg. 439)
19. S04416 (Bldg. 364)
20. S04417 (Bldg. 364)

~~B.~~ MCAS TUSTIN

1. 181359 (Bldg. 28)
2. 181360 (Bldg. 29)
3. 181361 (Bldg. 184)
4. ~~181362~~ (Bldg. 184)
5. 181363 (Bldg. 213)
6. 181364 (Bldg. 213)
7. ~~181365~~ (Bldg. 227)
8. ~~181366~~ (Bldg. 249)
9. 181367 (~~bldg.~~ 132)
10. 181368 (Bldg. 134)

II. FLOW DIAGRAM

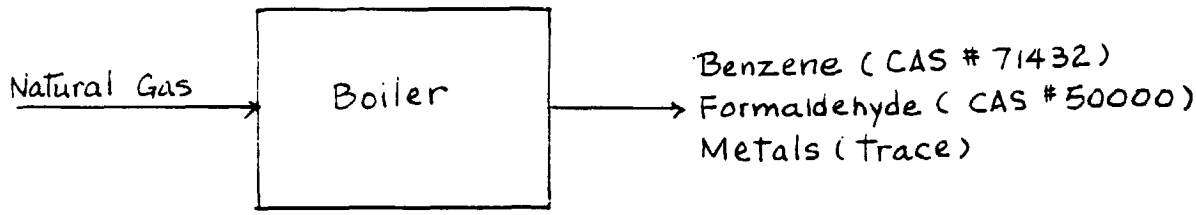

III. EMISSION QUANTIFICATION METHOD

Pooled Source Testing - All boilers are of similar size and make. Source testing of two boilers (one at each station) will adequately characterize the emissions from each boiler. Source test protocol will follow Section 93339 of the Emission Inventory Criteria and Guidelines. The contractor performing the Emission Inventory Report will submit the required information to the District prior to testing.

EMITTING SOURCE-JET ENGINE TEST CELL

I. DEVICE NUMBER(s):

A. MCAS EL TORO

1. S06008 (Bldg. 447)
2. M43096 (Bldg. 658)

B. ~~MCAS TUSTIN~~

~~1. 137108 (Bldg. 273)~~
~~2. 146644 (Bldg. 273)~~

II. FLOW DIAGRAM

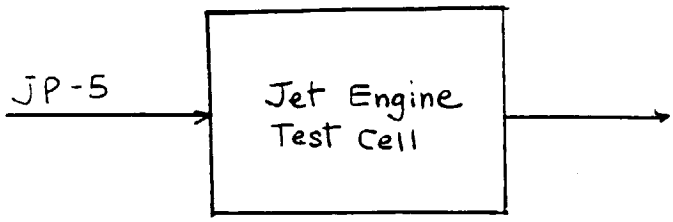

Arsenic (CAS # 7440382)
BaP (CAS# 50328) & other PAHs (#1151
Benzene (CAS# 71432)
Beryllium (CAS# 7440417)
Cadmium (CAS# 7440439)
Chromium (CAS# 18540299)
Copper (CAS# 7440508)
Dioxins
Formaldehyde (CAS# 50000)
Lead (CAS# 7439921)
Manganese (CAS# 7439965)
Mercury (CAS# 7439976)
Nickel (CAS# 7440020)
Selenium (CAS# 7782492)
Zinc (CAS# 7440666)
Metals (trace)

III. EMISSION QUANTIFICATION METHOD

Existing Source Test Data - The Department of Defense has done extensive testing on emissions from jet engine test cells. This information adequately characterizes the emissions from the test cells and will be submitted in the Emission Inventory Report.

EMITTING SOURCE - SPRAY BOOTH

I. DEVICE NUMBER(s):

A. MCAS EL TORO

1. M59110 (Bldg. 296)
2. M59112 (Bldg. 392)
3. S05981 (Bldg. 447)
4. S06562 (Bldg. 304)

~~B. MCAS TUSTIN~~

~~1. S07168 (Bldg. 187)~~
~~2. S07170 (Bldg. 98)~~
~~3. M51450 (Bldg. 251)~~

II. FLOW DIAGRAM

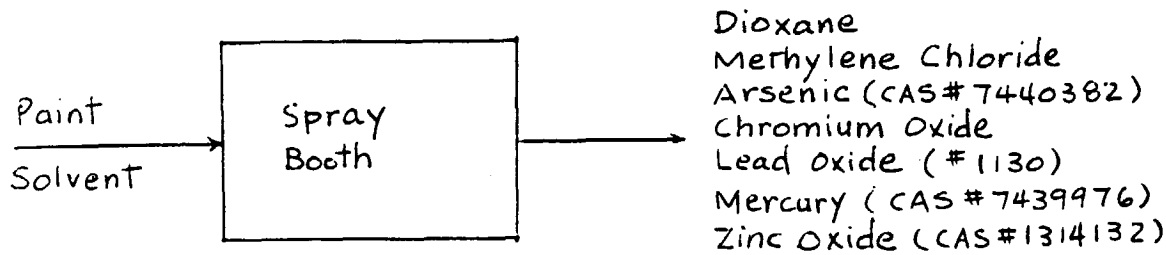

III. EMISSION QUANTIFICATION METHOD

Emission based on material balance using engineering expertise and knowledge of process. Knowledge of paint used and recovered wash, along with engineering estimates, will adequately characterize the emissions from the booth.

EMITTING SOURCE - SPRAY GUN

I. DEVICE NUMBER(s):

A. MCAS EL TORO

1. 805982 (Bldg. 1601)
2. 805983 (Bldg. 1601)
3. 805984 (Bldg. 1601)

II. FLOW DIAGRAM

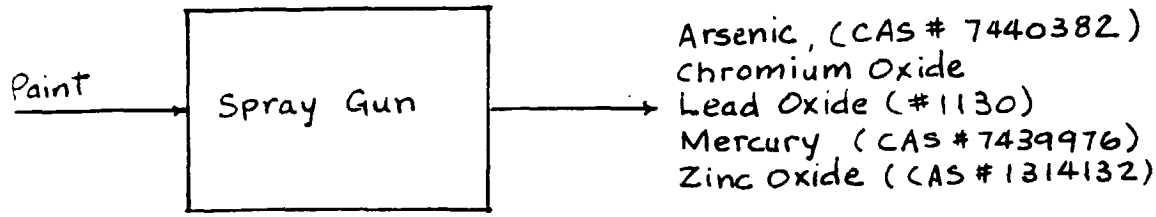

III. EMISSION QUANTIFICATION METHOD

Emissions calculated from other emission estimation techniques. Knowledge of the type of paint and thus spray gun operation can be used to adequately estimate the emissions from the gun.

EMITTING SOURCE - STORAGE TANK

I. DEVICE NUMBER(s):

A. MCAS EL TORO

1. 189483 (Fuel Farm 555)
2. 189484 (Bldg. 658A)
3. 189485 (Bldg. 658B)
4. 189486 (Bldg. 716A)
5. 189487 (Bldg. 439A)
6. 189488 (Bldg. 439B)
7. 189489 (Bldg. 364A)
8. 189490 (Bldg. 364B)
9. 189491 (Bldg. 800A)
10. 189492 (Bldg. 800B)
11. 189493 (Bldg. 800C)
12. 189494 (Bldg. 98B)
13. 189495 (Bldg. 329)
14. 189596 (Bldg. 398)
15. 189597 (Bldg. 448)
16. S07348 (Fuel Farm 6)
17. M44504 (Fuel Farm 5)
18. M50840 (Fuel Farm 4)

~~B. MCAS TUSTIN~~

1. Bldg. 169 and 170 (Permit ~~application submitted~~)

II. FLOW DIAGRAM

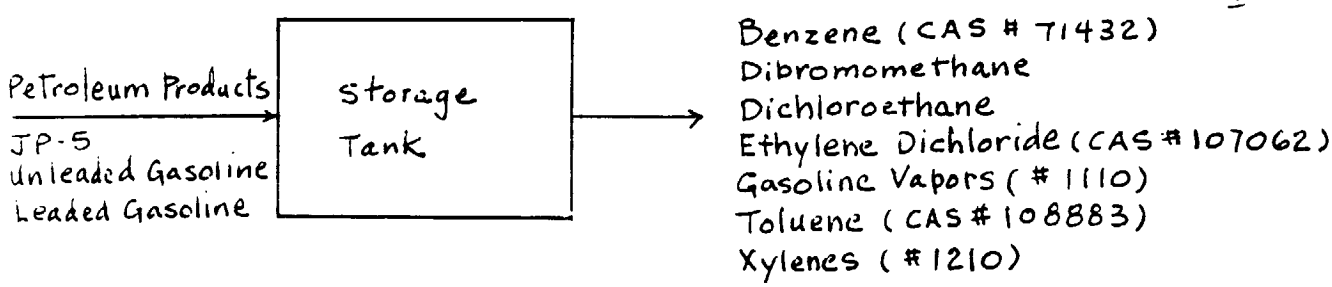

III. EMISSION QUANTIFICATION METHOD

Emission Factors - The emissions from the tanks can be adequately characterized by using emission factors.

EMITTING SOURCE - FUEL DISPENSING

I. DEVICE NUMBER(s):

A. MCAS EL TORO

1. 152004 (Bldg. 298)
2. 903509 (Bldg. 651)
3. 903512 (Bldg. 637)
4. M41244 (Bldg. 390)
5. 120123 (Bldg. 392)
6. 120124 (Bldg. 388)

~~B. MCAS TUSTIN~~

~~1. 903502 (Bldg. 222)~~
~~2. 903506 (Bldg. 186)~~

II. FACILITY DIAGRAM

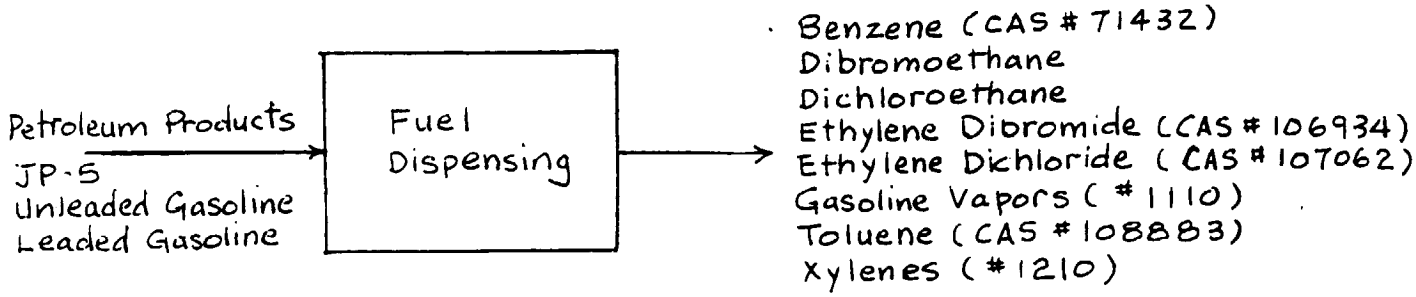

III. EMISSION QUANTIFICATION METHOD

Emission Factors - The emissions from the fuel dispensers can be adequately characterized by using emission factors.

EMITTING SOURCE - DEGREASER

I. DEVICE NUMBER(s)

A. MCAS EL TORO

1. 152583 (Bldg. 628)

II. FLOW DIAGRAM

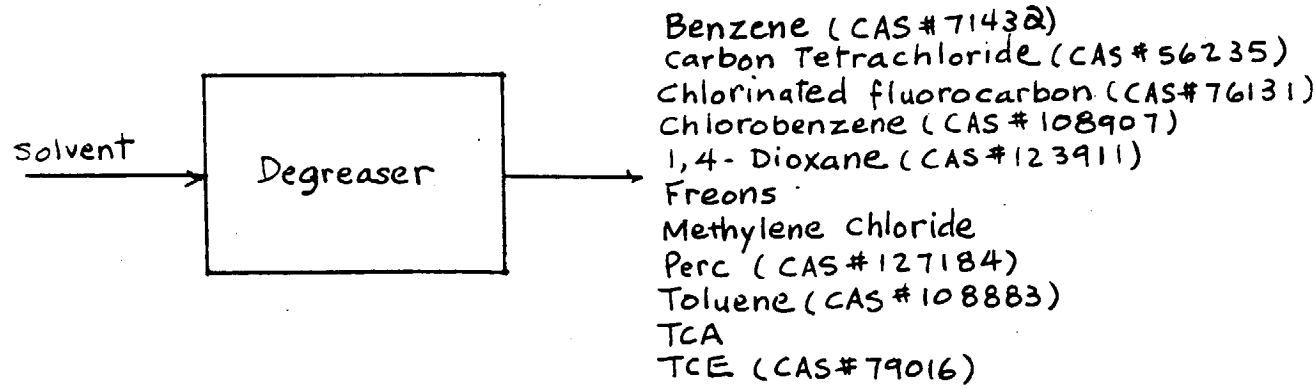

III. EMISSION QUANTIFICATION METHOD

Emission calculated from other emission estimation techniques. Knowledge of the type of solvent and degreaser operation can be used to adequately estimate the emissions from the degreaser.

APPENDIX E

COPY OF THE SCAQMD APPROVAL LETTER

South Coast
AIR QUALITY MANAGEMENT DISTRICT
9150 FLAIR DRIVE, EL MONTE, CA 91731 (818) 572-6200

MAY 18 1990

AB 2588 Air Toxics Inventory Plan Approval
Facility I.D. No.: 006281

Mr. Sam Lamb
Marine Corps Air Station
Facilities Management Dept (1JG)
MCAS El Toro
Santa Ana, CA 92709-5001

Dear Mr. Lamb:

The District has approved your Air Toxics Inventory Plan (ATIP) subject to certain guidelines described below. You are required by the California Health and Safety Code Section 44300 et seq., to prepare and submit to the District an Air Toxics Inventory Report (ATIR) within 180 days of the above ATIP approval date.

Forms that were included in the document titled "Subchapter 7.6 Emissions Inventory Criteria and Guidelines" must be completed as a part of preparing the ATIR. For your convenience, a complete set of these forms with instructions, and Article 4 of the Guidelines describing ATIR requirements are enclosed. You need to complete only the forms that are applicable to your facility.

In addition, you are also required to fill out the enclosed emissions summary form for each of the Appendix A-I substances you have listed in your ATIP. This form is only for the substances which are being quantified and reported on FORM PRO.

To complete these forms you need to assign five digit ID numbers to each Stack, Device and Vent. If you have already assigned five digit ID numbers in your ATIP you may use the same ID numbers in your ATIR. Please use the following guidelines to reassign the ID numbers:

1. For Device ID # use five digit sequential numbers starting with 7. Example: 70001, 70002,... etc. (Note that the District-assigned Permit Numbers, if available, must also be entered in the PERMIT ID space on FORM DEV for that particular Device).

2. For Vent ID # use five digit sequential numbers starting with 8. Example: 80001, 80002,... etc.

3. For Stack ID # use five digit sequential numbers starting with 9. Example: 90001, 90002,... etc.

ID numbers are unique to each Stack, Vent or Device. **Do not repeat any ID number in your ATIR. Please submit with your ATIR a table in the following format to summarize previous ID numbers (assigned in ATIP) and corresponding new five digit ID numbers (reassigned in ATIR).**

SUMMARY OF REASSIGNED ID NUMBERS
EXAMPLE

EMISSION POINTS AND DEVICES	PREVIOUSLY ASSIGNED ATIP ID NUMBER	NEW REASSIGNED ATIR ID NUMBER	
DEVICES	DEVICE #1	70001	
	DEVICE #2	70002	Etc.
VENTS	VENT #1	80001	
	VENT #2	80002	Etc.
STACKS	STACK #1	90001	
	STACK #2	90002	Etc.

If you have any questions, please call Mr. Hernando Cordoba at (818) 572-6253.

Very truly yours,

William J. Dennison
Director of Engineering

Wayne E. Zwiacher

Wayne E. Zwiacher
Senior Engineering Manager

WEZ:db/HC

Attachment

APPENDIX F
SAMPLE CALCULATIONS

SAMPLE CALCULATIONS

BOILERS

DEVICES #70001 - 70020

$$E1 = Q1 \times EF \times (1 - e) \quad [1]$$

$$E2 = Q2 \times EF \times (1 - e) \quad [2]$$

where,

E1 = Maximum Hourly Emissions (Lbs/hr)

E2 = Annual Average Emissions (Lbs/year)

Q1 = Maximum Hourly Fuel Use

Q2 = Annual Average Fuel Use

EF = Emission Factor

e = Control Device Efficiency

Air Toxics*: Benzene (71432), Formaldehyde (50000), Toluene (108883)

Emission Factors**:

EF(benzene) = 0.091 LBS/Million Standard Cubic Feet Natural Gas (MMSCF)

EF(formaldehyde) = 0.215 LBS/MMSCF Natural Gas

EF(toluene) = 0.046 LBS/MMSCF Natural Gas.

Example - Device #70001:

Q1 = 4184 SCF Natural Gas/Hr

= 4.184 E -03 MMSCF Natural Gas/Hr

e = 0%

and from [1],

E1(benzene) = [4.184 E -03 MMSCF/HR] x [0.091 LBS/MMSCF Natural Gas] x [1 - 0]

= 3.81 E -04 LBS/HR

Similarly,

E1(formaldehyde) = 9.00 E -04 LBS/HR
E1(toluene) = 1.92 E -04 LBS/HR

For annual emissions,

Q2 = 1000 SCF Natural Gas/HR

From usage schedule of 10 HRS/DAY, 135 DAYS/YR,

Q2 = 1.35 MMSCF/YR

Thus, from [2],

E2(benzene) = [1.35 MMSCF Natural Gas/YR] x [0.091 LBS/MMSCF] x [1 - 0]

= 1.23 E -01 LBS/YR

Similarly,

E2(formaldehyde) = 2.90 E -01 LBS/YR
E2(toluene) = 6.20 E -02 LBS/YR

* Source: CARB AB 2588 Appendix A-1 Substances for Which Emissions Must Be Quantified

* * Source: CARB Appendix III "Source Classification Codes and EPA/NEDS Emission Factors", 1988, and "CARB Speciation Manual", Volumes I & II, 1989)

JET ENGINE TEST CELLS

DEVICES #70021 AND 70022:

Air Toxics*: Arsenic (7440382), Benzene (71432), Cadmium (7440439), Chromium (18540299), Lead (7439921), Nickel (7440020), Selenium (7782492), Xylenes (1210), Zinc (7440666)

Emission Factors**:

EF(Arsenic)	= 0.063	LBS/1000	Gallons	JP-5	Fuel	Used
EF(Benzene)	= 0.26	"	"	"	"	"
EF(Cadmium)	= 0.006	"	"	"	"	"
EF(Chromium)	= 0.063	"	"	"	"	"
EF(Lead)	= 0.065	"	"	"	"	"
EF(Nickel)	= 0.006	"	"	"	"	"
EF(Selenium)	= 0.006	"	"	"	"	"
EF(Xylenes)	= 5.720	"	"	"	"	"
EF(Zinc)	= 0.065	"	"	"	"	"

Example- Device #70021,

Maximum hourly emissions:

Q1 = 71 Gallons/Min = 4260 Gallons/HR JP-5 Fuel Usage

e = 0

and from [1],

E1(arsenic) = [4260 Gallons/HR] x [0.063 LBS/1000 Gallons JP-5] x [1 - 0]

= 2.68 E-01 LBS/HR

Similarly,

E1(benzene) = 1.11 E -00 LBS/HR
E1(cadmium) = 2.56 E -02 "
E1(chromium)= 2.68 E -01 "
E1(lead) = 2.77 E -01 "
E1(nickel) = 2.56 E -02 "
E1(selenium)= 2.56 E -02 "
E1(xylenes) = 24.37 E -00 "
E1(zinc) = 2.77 E -01 "

For annual average emissions,

Q2 = 15 Gallons/Min = 900 Gallons/HR JP-5 (average usage)

From usage records, cell was tested for 27.3 hours for 1989. Thus, from [2],

E2(arsenic) = [900 Gallons JP-5/HR] x [27.3 HRS] x
0.063 LBS/1000 Gallons Fuel Used] x [1 - 0]
= 1.55 E -00 LBS/YR

Similarly,

E1(benzene) = 6.39 E -00 LBS/YR
E1(cadmium) = 14.7 E -02 "
E1(chromium)= 1.55 E -00 "
E1(lead) = 1.60 E -00 "
E1(nickel) = 14.70 E -02 "
E1(selenium)= 14.70 E -02 "
E1(xylenes) = 141.0 E -00 "
E1(zinc) = 1.60 E -00 "

* Source: CARB AB 2588 Appendix A-1 Substances for Which Emissions Must Be Quantified

* * Source: CARB Appendix III "Source Classification Codes and EPA/NEDS Emission Factors", 1988, and "CARB Speciation Manual", Volumes I & II, 1989

SPRAY BOOTHS

DEVICES #70024 AND 70026

o Paint Emissions:

$$E1 = Q1 \times \% \text{ Overspray} \times EF \times (1 - e) \quad [3]$$

$$E2 = Q2 \times \% \text{ Overspray} \times EF \times (1 - e) \quad [4]$$

where,

E1 = Maximum Hourly Emissions (Lbs/Hr)

E2 = Annual Average Emissions (Lbs/Yr)

Q1 = Maximum Daily Paint Usage

Q2 = Annual Average Paint Usage

Overspray = 1 (for organic vapors)

EF = Emission Factor (based on MSDS data)

e = Filter Efficiency

Example - Device #70026

Air Toxics*: Xylenes (1210), Ammonia (7664417)

Emission Factors**:

EF(xylenes) = 0.377 Lbs/Gal

EF(ammonia) = 0.001 Lbs/Gal

From usage data,

$Q1 = 1$ Gal/Hr

$Q2 = 50$ Gal/Yr

Therefore, maximum hourly emissions from [3]:

$e = o$ (for organic vapors)

$$E1(\text{xylenes}) = [1 \text{ Gal/Hr}] \times 1 \times [0.377 \text{ Lbs/Gal}] \times [1 - 0] = 0.377 \text{ Lbs/Hr}$$

Similarly,

$$E1(\text{ammonia}) = 0.001 \text{ Lbs/Hr}$$

From [4], annual average emissions are:

$$E2(\text{xylenes}) = [50 \text{ Gal/Yr}] \times [0.377 \text{ Lbs/Gal}] \times [1 - 0] = 18.9 \text{ Lbs/Yr}$$

Similarly,

$$E2(\text{ammonia}) = 0.05 \text{ Lbs/Yr}$$

o Solvent Emissions:

$$E1 = Q1 \times EF \qquad [5]$$

$$E2 = Q2 \times EF \qquad [6]$$

where,

E1 = Maximum Hourly Emissions

E2 = Annual Average Emissions

Q1 = Maximum Daily Solvent Usage

Q2 = Annual Average Solvent Usage

EF = Emission Factor (from MSDS data)

Example- device #70026

Air Toxics*: Toluene (108883)

Emission Factor:

EF(toluene) = 0.84 Lbs/Gal solvent

Q1 = 0.5 Pints/Hr

Q2 = 53 Pints/Yr

From [5], Maximum Hourly Emissions:

E1(toluene) = [0.5 Pints/Hr] x [0.84 Lbs/Gal]
x [1 Gal/ 8 Pints]
= 0.053 Lbs/Hr

From [6], Annual Average Emissions:

E2(toluene) = [53 Pints/Yr] x [0.84 Lbs/Gal]
x [1 Gal/ 8 Pints]
= 5.57 Lbs/Yr

* Source: CARB AB 2588 Appendix A-1 Substances for Which Emissions Must Be Quantified

* * Source: Material Safety Data Sheets

SPRAY GUN

DEVICE #70029

Air Toxics*: Lead Sulfochromate (1344372) toluene (108883),

Emission Factors**:

EF(lead sulfochromate) = 1.006 Lbs/Gal

EF(toluene) = 0.218 Lbs/Gal

Q1 = 0.5 Gal/Hr

Q2 = 50 Gal/Yr

Overspray = 20%

Filter Efficiency = 0%

From [3], maximum hourly emissions:

E1(lead sulfochromate) = [0.5 Gal/Hr] x [20%]
x [1.006 Lbs/Gal]
= 0.1 Lbs/Hr

Similarly,

E1(toluene) = 0.109 Lbs/Hr

From [4], annual emissions:

E2(lead sulfochromate) = [50 Gal/Yr] x [20%] x
[1.006 Lbs/ Gal]
= 5.03 Lbs/Yr

Similarly,

E2(toluene) = 10.9 Lbs/Yr

* Source: CARB AB 2588 Appendix A-1 Substances for Which Emissions Must Be Quantified

* * Source: Material Safety Data Sheets

GASOLINE UNDERGROUND STORAGE TANKS

DEVICES #70044, 70053, AND 70054:

Air Toxics*: Benzene (71432), Xylenes (1210), Toluene (108883)

Efficiency = 95% (e = 0.95)

Emission Factors**:

Working Loss-

EF(benzene) = 0.0581 LBS/1000 Gallons Throughput
EF(xylenes)= 0.000 " " " "
EF(toluene) = 0.050 " " " "

Breathing Loss = 0

Example- Device 70053

Maximum hourly emissions:

Q1 = 137.5 Gallons Fuel/HR

and from [1],

E1(benzene) = [137.5 Gallons Fuel/HR] x [0.0581 LBS/1000 Gallons Throughput] x [1 - 0.95]

= 4.00 E -04 LBS/HR

Similarly,

E1(xylenes)= 0.000 LBS/HR
E1(toluene) = 3.37 E -04 LBS/HR

Annual average emissions:

Q2 = 285,996 Gallons/YR Throughput

From [2] for annual emissions,

E2(benzene) = [285,996 Gallons/YR] x [0.0581 LBS/1000 Gallons Throughput] x [1 - 0.95]

= 8.30 E -01 LBS/YR

Similarly,

E2(xylenes)= 0.00 LBS/YR
E2(toluene) = 7.00 E -01 LBS/YR

* Source: CARB AB 2588 Appendix A-1 Substances for Which Emissions Must Be Quantified

* * Source: CARB Appendix III "Source Classification Codes and EPA/NEDS Emission Factors", 1988, and "CARB Speciation Manual", Volumes I & II, 1989

GASOLINE FUEL DISPENSERS

DEVICES #70067 - 70071

$$E1 = E1w + E1s \quad [7]$$

$$E2 = E2w + E2s \quad [8]$$

where

$$E1w = Q1 \times EF,v \times (1 - e) \quad \text{Working Loss} \quad [9]$$

$$E1s = Q1 \times \% \text{ spillage} \times EF,l \quad \text{Spillage} \quad [10]$$

$$E2w = Q2 \times EF,v \times (1 - e) \quad \text{Working Loss} \quad [11]$$

$$E2s = Q2 \times \% \text{ spillage} \times EF,l \quad \text{Spillage} \quad [12]$$

and

EF,v = Emission Factor, vapor

EF,l = Emission Factor, liquid

Efficiency = 95% (e = 0.95)

Spillage = 20%

Air Toxics*: Benzene (71432), Xylenes (1210), Toluene (108883)

Emission Factors**,

EF,v(benzene)	= 7.70 E -02	LBS/1000	Gallons	Pumped
EF,l(benzene)	= 4.90 E -03	"	"	"
EF,v(xylenes)	= 0.00	"	"	"
EF,l(xylenes)	= 0.00	"	"	"

EF,v(toluene) = 6.60 E -02 " " "
EF,l(toluene) = 4.02 E -03 " " "

Example- Device #70067,

Maximum hourly emissions:

Q1 = 121.8 Gallons Fuel/HR

Using [7], [9] and [10],

E1(benzene) = [121.8 Gallons Fuel/HR] x [7.70 E -02 LBS/1000 Gallons Pumped] x [1 - 0.95]
+ [121.8 Gallons Fuel/HR] x [4.90 E -03 LBS/1000 Gallons Pumped] x [0.20]

= 5.88 E -04 LBS/HR

Similarly,

E1(xylenes) = 0.00 LBS/HR
E1(toluene) = 5.04 E -04 LBS/HR

Annual emissions:

From usage records,

Q2 = 355,650 Gallons

and using [8], [11] and [12],

E2(benzene) = [355,650 Gallons Fuel/YR] x [7.70 E -02 LBS/1000 Gallons Pumped] x [1 - 0.95]
+ [355,650 Gallons Fuel/YR] x [4.90 E -03 LBS/1000 Gallons Pumped] x [0.20]

= 1.72 LBS/YR

Similarly,

E2(xylenes) = 0.00 LBS/YR
E2(toluene) = 1.47 LBS/YR

* Source: CARB AB 2588 Appendix A-1 Substances for Which Emissions Must Be Quantified

* * Source: CARB Appendix III "Source Classification Codes and EPA/NEDS Emission Factors", 1988, and "CARB Speciation Manual", Volumes I & II, 1989