N60258.000354
NSY LONG BEACH
SSIC #5090.3

Southwest Division
Naval Facilities Engineering Command
Contracts Department
1220 Pacific Highway, Rm. 135
San Diego, California 92132-5187

Contract No.: N68711-92-D-4670

COMPREHENSIVE LONG-TERM ENVIRONMENTAL ACTION NAVY

NAVY CLEAN II

FINAL
DATA MANAGEMENT PLAN
CTO-0037
LONG BEACH NAVAL SHIPYARD
LONG BEACH, CALIFORNIA

Prepared by:

Bechtel National, Inc.
Fifty Beale Street
San Francisco, California 94105-1895

July 18, 1994

Signature: S. R. Livenick Date: 8/8/94
S. R. Livenick, CTO Lead

Signature: Andrea Masvidal Date: 8-3-94
Andrea Masvidal, Data Manager

TABLE OF CONTENTS

Section | Page

EXECUTIVE SUMMARY ES-1

1 INTRODUCTION 1

2 PROJECT FILES 2
2.1 PROJECT FILE CONTROL 2
2.2 PROJECT FILE STORAGE AND SECURITY 3
2.3 PROJECT FILE ACCESS 3

3 CLEAN II PROJECT DATABASE 5
3.1 CLEAN II DATABASE ACCESS AND SECURITY 5
3.2 DATABASE MANAGEMENT STAFF 6
3.2.1 CLEAN II Database Manager (DBM) 6
3.2.2 CLEAN II Database Administrator (DBA) 7
3.2.3 CLEAN II Data Coordinators 7
3.2.4 CLEAN II Systems Analysts/Programmers 8
3.2.5 CLEAN II Geographical Information System (GIS) Applications Specialist 8
3.2.6 Project Data Entry 9

4 FIELD SAMPLING DATA MANAGEMENT 10
4.1 LABORATORY NOTIFICATION 10
4.2 SAMPLE IDENTIFICATION 10
4.3 SAMPLE DOCUMENTATION 11

5 DATA REVIEW 14
5.1 ENVIRONMENTAL FIELD DATA REVIEW PROCESS 14

TABLE OF CONTENTS (continued)

5.1.1 Geotechnical INTegrator Software (gINT®) 14
5.2 SAMPLE ANALYSIS DATA REVIEW PROCESS 16
5.2.1 Sample Analysis Data Verification 16
5.2.2 Sample Analysis Contract Compliance Screening 18
5.2.3 Sample Analysis Data Validation 18
5.2.4 Results of Sample Analysis Data Review Process 19
5.2.5 Data Analysis 21
5.3 HISTORICAL DATA REVIEW PROCESS 21

6 DATA USES 24

APPENDICES

A Documentation Forms

B Data Types, Database Tables, and Database Table of Contents

C Analytical Data Requirements

D Sample Analytical Data Review Qualifiers and Status Codes

E Response to Comments

TABLE OF CONTENTS (continued)

LIST OF TABLES

Table 5-1 Listing of Modeling Software

LIST OF FIGURES

Figure 2-1 Project File Flow Diagram

Figure 5-1 Environmental Field Data Review Process

Figure 5-2 Sample Analysis Review Process

ACRONYM LIST

ALS	Analytical Laboratory Subcontractor
ARAR	Applicable, Relevant and Appropriate Requirement
ASCII	American Standard Code for Information Interchange
CCS	Contract Compliance Screening
CLEAN	Comprehensive Long-Term Environmental Action, Navy
CLC	Contract Laboratory Coordinator
CLP	Contract Laboratory Protocol
CSL	Close Support Laboratory
CTO	Contract Task Order
DBA	Database Administrator
DBM	Database Manager
DDR	Design Document Register
DMP	Data Management Plan
DO for SEIR	Delivery Order for Sample Event Initiation Record
DON	Department of Navy
DTSC	Department of Toxic Substances Control
EPA	Environmental Protection Agency
FW	Facility Wide
GIS	Geographical Information Specialist
LBNSY	Long Beach Naval Shipyard
NEESA	Naval Energy and Environmental Support Activity
OUs	Operable Units
PDCC	Project Document Control Center
PEO	Project Execution Office
PM	Project Manager
PSFCI	Program Subject File Code Index
QA	Quality Assurance
QAPP	Quality Assurance Project Plan
RI/FS	Remedial Investigation/Feasibility Study
RWQCB	Regional Water Quality Control Board
SAP	Sampling and Analysis Plan
SI	Site Inspection
USEPA	United States Environmental Protection Agency
UU	Unverified-Unvalidated Data
VI	Verified-Invalid Data
VU	Verified-Unvalidated Data
VV	Verified-Valid Data

EXECUTIVE SUMMARY

This Database Management Plan (DMP) describes the methods for gathering, verifying, analyzing, reporting, and archiving of data generated during the Remedial Investigation/Feasibility (RI/FS) study to be performed in support of Contract Task Order (CTO) 037 under Contract No. N68711-92-D-4670 for the Comprehensive Long-Term Environmental Action, Navy (CLEAN) II Program. Contract Task Order (CTO) 037 corresponds to Operable Unit (OU)4 (Sites 8,9,10,11,12 and 13) and OU5 (Site 11).

The data produced by the RI/FS will document surficial surveys, groundwater elevation surveys, geophysical surveys, geologic and hydrologic logs, groundwater well construction and development logs, soil boring logs, drilling logs, and aquifer testing, and other types of information that may be obtained during CTO-037 investigations. Laboratory analyses will be performed on soil, surface water, groundwater, and sediment samples.

The DMP is an integral part of the Long Beach Naval Shipyard (LBNSY) RI/FS Draft Sampling and Analysis Plan (SAP) dated 30 April 1993, and is intended to be used in conjunction with the Quality Assurance Project Plan (QAPP) located in Appendix A of the SAP.

Section 1
INTRODUCTION

The purpose of the Data Management Plan (DMP) is to provide a system for managing environmental data during all Remedial Investigation/Feasibility Study (RI/FS) field activities associated with Operable Unit (OU) 4 (Sites 8,9,10,11 and 12) and OU5 (Site 11). The DMP will describe how the data obtained during the RI/FS will be controlled, documented, preserved, and retrieved in a format required by end-users.

Section 2
PROJECT FILES

Project files will be established to store all accountable project documents. Accountable documents include, but are not limited to, procurement request forms, progress reports, letters, daily field reports, field data forms (eg., boring/drilling logs, well development logs, well sampling records, well construction logs, field sampling logs, trench logs), sample event information records (SEIR), analytical data, electronic data deliverables, analytical reports, maps, and imagery.

2.1 PROJECT FILE CONTROL

All incoming and outgoing original CTO 037 documentation (whether in hard-copy or electronic form) will be stored in a central repository, the Navy CLEAN II Program Document Control Center (PDCC), located in Bechtel's San Diego, California office.

For field activity data (excluding analytical data) the CTO project lead or designee will be responsible for reviewing the original document, attaching a distribution list, and forwarding both to the PDCC. Laboratory analytic data is an important exception to this practice. Originals that are associated with field or sampling activities must be accompanied by a Field Data Verification Notification and Upload Request Form (see Appendix A) in addition to the distribution list.

Upon receipt, the PDCC project administrator will assign a unique chronological (chron) number and a four-digit Program Subject File Code Index (PSFCI) to each original document. The PSFCI is assigned for use in sorting and retrieving documents at a later date. In addition, a Design Document Register (DDR) program will be used to log and track all supplier/procurement documents, laboratory reports, and specifications which are often subject to revision. The DDR is designed to record each revision and the date of each subsequent revision. Documents tracked by the DDR will be assigned a consecutive document number, in addition to the chron number and PSFCI.

Once appropriate identification numbers are assigned, PDCC will forward a copy to the CTO project lead and place the original in permanent storage. If the original documents a particular field activity, a copy of the log, report, or other document will be forwarded to the data management group for

inclusion in the CLEAN II environmental database (bound daily field log books will be the exception). Electronic data deliverables and associated hard copy will go directly to the laboratory coordinator and then to PDCC.

Figure 2-1 provides a project file flow diagram, which traces the steps of an original project document from initial receipt through final PDCC copy distribution.

2.2 PROJECT FILE STORAGE AND SECURITY

Once appropriate copies of the original document are distributed, original project records are stored and secured in the PDCC's fire-proof, locking file cabinets.

Bechtel's Los Angeles Regional Office, located at 12440 E. Imperial Highway, Norwalk, California will maintain a copy of each document submitted to the PDCC. The copies, which are intended for daily CTO project activity use, will be stored in sequential order according to chron number within unique CTO file folders.

2.3 PROJECT FILE ACCESS

Access to the PDCC files will be limited to PDCC clerks and document administration staff. Original documents will be signed out by placing a check-out card in the file in place of the document. As a general practice, the original files will be kept in the PDCC at all times, and the check-out of documents will be monitored by the Project Administrator.

Project files maintained in Bechtel's Norwalk, California office will be similarly maintained. Once placed in the project files, records pertaining to CTO 037 will be checked out by placing a check-out card in the file in place of the project record. Access will be limited to CLEAN II project personnel. Personnel who are not directly involved with the project may obtain access to the project files after approval from the CTO project manager or CTO project lead.

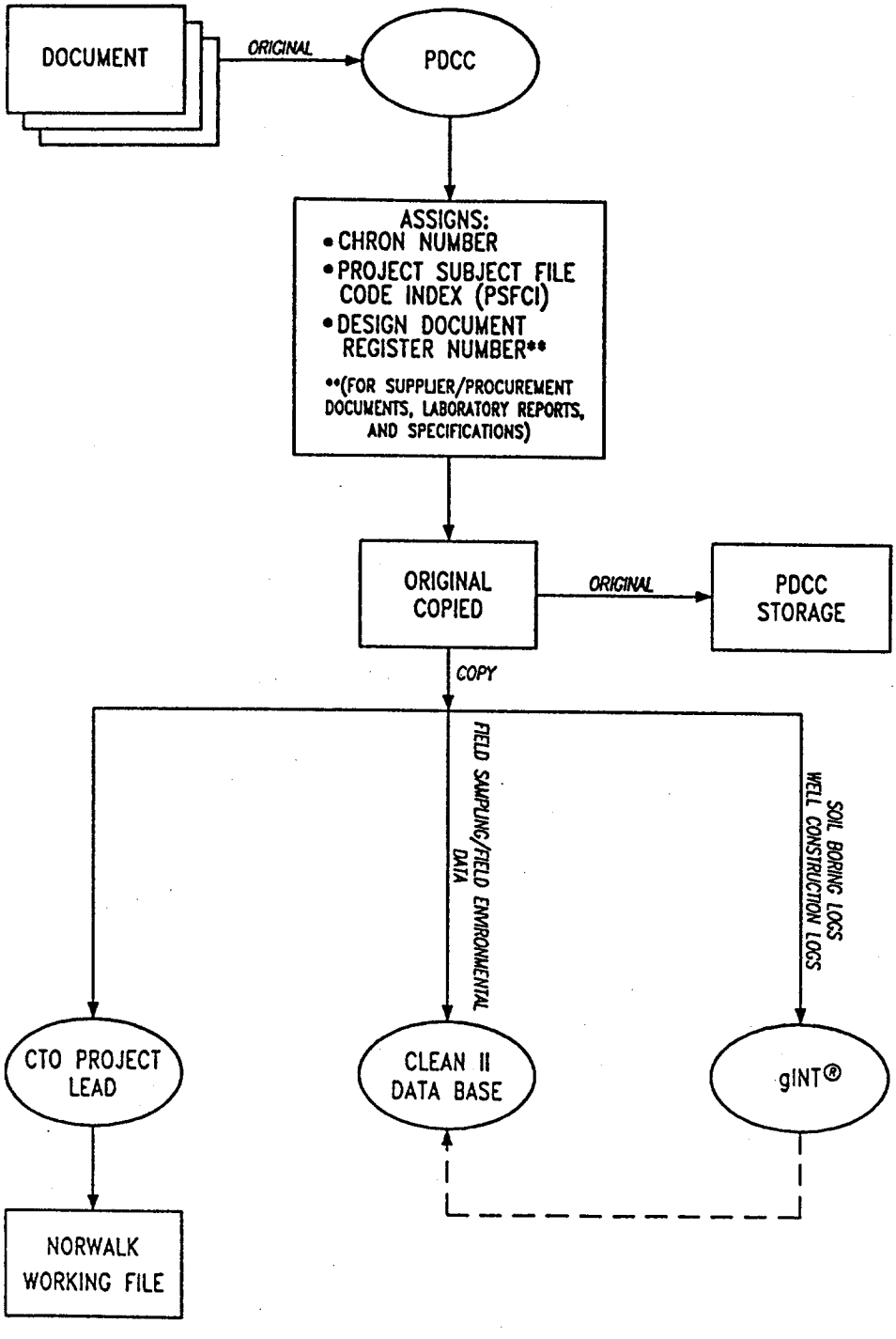

FIGURE 2-1

PROJECT FILE FLOW DIAGRAM

Section 3
CLEAN II PROJECT DATABASE

Field environmental data records (e.g., borehole logs, well development logs, well construction logs) and field sampling data records (e.g., analytical laboratory results, data validation reports), resulting from the RI/FS for OU4 and OU5 will be entered, stored, organized, and secured in the CLEAN II environmental database, resident on a mainframe computer at Bechtel's San Diego, California office. The database will use commercially-available software and will include a relational database management system, ORACLE (a trademark of the ORACLE Corporation). ORACLE will organize the data into four separate data types: measurement data, descriptive data, sample and information tracking data, and reference data. Refer to Appendix B for a detailed database table of contents and formats.

ORACLE can be linked to statistical analysis software such as SAS (a trademark of SAS Institute, Inc.) and the geographic information system, ARC/INFO (a trademark of the Environmental Systems Research Institute). The database system can operate on either VMS (Digital Equipment Company trademark) or UNIX (AT&T trademark) workstations. Personal computers will be networked to the CLEAN II database to access database tables.

3.1 CLEAN II DATABASE ACCESS AND SECURITY

The database system is designed to protect against data corruption and unauthorized data access. User access is controlled by the use of passwords, and users will be provided "read-only" access to verified and validated data. Preliminary data, stored in an interim repository, may be available for modification for specific activities, such as the entry of data quality codes by data validators. However, once the data are declared to be validated/verified by authorized personnel (e.g., qualified data validators for laboratory analytical data or lead field investigators for field data collection and verification), they will be placed in production database tables. Modifications to production tables may be performed only by data management staff and only when required Database Change Requests have been approved by appropriate project managers and technical specialists. Modifications to validated data will be tracked electronically as separate fields within all environmental database tables. Tracking fields will include the user identification of the person making the change to the database, the date of the change, and the program or PDCC chron number of the database change request. A sample Database Change Request Form and a Field Data Verification Notification and Upload Request Form,

used to document changes to field collected raw data (raw data files), are included in Appendix A. A completed Field Data Verification Notification and Upload Request Form must accompany transmittal of all raw data files, reports, logs, etc., to the data management staff for inclusion in the CLEAN II database.

Data security will be further enhanced by periodic back-ups of all database tables and computer programs. Copies of the database will be stored offsite (remote from program data management facilities and computer systems) to provide back-up for all data in case of damage to the facility and computer equipment.

3.2 DATABASE MANAGEMENT STAFF

The database management staff is responsible for compiling project data into the consolidated program database, making data readily available to program and project personnel, training data users, developing application interfaces, and providing systems maintenance and data archival services. Specific staff responsibilities are defined below:

3.2.1 CLEAN II Database Manager (DBM)

- Supervise design, development, implementation, operation, and maintenance of the CLEAN II environmental database
- Review CTO Data Quality Objective definition, data sufficiency, and sampling plan designs
- Approve data deliverables required for transmission to Naval Facilities Engineering Command, Southwest Division, and verify related data reporting and analysis documents
- Establish database and computer systems design, monitor system operations, and define and authorize any system modifications
- Generate environmental data processing procedures, oversee adherence to procedures by program personnel, and authorize procedure additions, revisions, or modifications
- Train staff and data users to perform normal data access and system interfacing

- Monitor data transfers from data generators to data users
- Oversee processing, entry, documentation, verification, validation, and storage of data within the database
- Supervise CLEAN II data management staff
- Monitor data management budgets and schedules

3.2.2 CLEAN II Database Administrator (DBA)

- Establish and maintain connections between ORACLE, SAS, ARC/INFO, and other program software
- Perform program applications
- Implement system design and maintenance
- Establish user accounts, grants, passwords, and privileges
- Perform database backups and archivals as well as any necessary restoration of database tables from archive
- Update system components and maintain current software versions to ensure efficient, secure operations

3.2.3 CLEAN II Data Coordinators

- Monitor maintenance of data integrity for the various data types within the database
- Maintain communications between data generators, data users, and programming staff
- Define data user needs, procedural additions or modifications, and system shortcomings
- Track data deliverables from field and laboratory data sources; oversee data entry and screening functions; transmit appropriate preprinted, numbered data collection forms to data gatherers
- Oversee electronic transfer of data into the database

- Assist in data collection, database entry, and assessment of historical site data
- Assist in resolving discrepancies within and among database tables
- Establish tracking mechanism to monitor data receipt and changes
- Perform miscellaneous data processing and routine report generation

3.2.4 CLEAN II Systems Analysts/Programmers

- Develop data processing and application programs
- Create user menus and screens for program database operations and access
- Perform routine and customized system programming tasks
- Develop programs to track and monitor system use and performance
- Coordinate user requests for data management services or data export
- Assist in maintenance of application programs, system documentation, and user training

3.2.5 CLEAN II Geographical Information System (GIS) Applications Specialist

- Perform mapping and modeling functions
- Maintain consistent, comprehensive project data for specific geographic areas
- Develop cartographic display capabilities for project data
- Assist in analysis and interpretation of spatially-related data
- Develop interfaces between GIS and database tables

3.2.6 Project Data Entry

- Perform database entry of interim tables, and verification of site data. Certain data may be entered electronically from the field.
- Perform data verification specific data types
- Generate appropriate tracking documentation for data collection, verification, and validation; transfer appropriate data tracking documents to program records management

Section 4
FIELD SAMPLING DATA MANAGEMENT

This section describes procedures which ensure proper documentation during field sampling activities at OU4 and OU5.

4.1 LABORATORY NOTIFICATION

Samples collected during the Long Beach Naval Shipyard (LBNSY) RI/FS will be analyzed by Navy/Bechtel-approved laboratory(s) using the Naval Energy and Environmental Support Activity (NEESA) process. Sampling events will be initiated by the CTO Project Manager (PM) or designee by completing the Delivery Order for Sample Event Initiation Record (DO for SEIR). This form will provide a summary of sampling objectives and will initiate preparations for the sampling event. For example, the form will allow field sampling personnel to begin preparing field equipment such as anticipated sample collection and shipment dates, numbers and types of samples, required sample containers and preservatives, etc.). The DO for SEIR form is submitted by the CTO Project Manager or designee to the CLEAN II PDCC for distribution to the DBM and the contract Laboratory Coordinator (CLC). Appendix A contains a sample DO for SEIR form with completion instructions. The DBM is responsible for verifying that sample planning and collection information has been correctly entered into the environmental database and for providing this information to data users and validators. The CLC is responsible for reviewing the documentation generated by this procedure and for ensuring that the designated analytical laboratory(s) receives a copy of the DO for SEIR. In addition, the CLC and the analytical laboratory(s) will ensure that an adequate stock of the various containers and preservative reagents is available for all sampling events. Additionally, the CLC will ensure that sufficient laboratory capacity is available and correct analytical methods have been identified.

4.2 SAMPLE IDENTIFICATION

Environmental samples collected to support CLEAN II program activities shall be identified according to the sample numbering system described below. Sample numbers will consist of the following **nine characters**:

000111155, where:

000 = A three digit CTO number (eg., 037)

1111 = A four digit sequential "blind" number (eg., 0001, 0002 ..., 9999) which complies with the Department of Toxic Substances Control's request not to identify actual sample locations in the sample number.

55 = A two digit sequential container number (eg., 01, 02, ..., 99).

Following this system an eleventh sample collected during CTO 037 activities using one container, would be identified as sample number 037001101. If fifteen containers are filled during the collection of this sample, the sample numbers would be identified as 037001101, 037001102, ..., to 037001115.

Each sample number shall be noted in the field log book during sample collection and entered onto the appropriate Field Data Transfer Form (refer to Appendix A), depending on the media sampled. Field Data Transfer forms are contained in the field log book and are verified by the site manager at the end of sampling activities. They are submitted through PDCC to the DBM for entry into the CLEAN II environmental database.

4.3 SAMPLE DOCUMENTATION

Data collected in the field will be recorded in a bound field log containing pre-numbered pages. A PDCC number will be assigned to each field log prior to its use in the field. This log will be filled out with an indelible ink pen on a daily basis. Any mistakes will be crossed through with a single line, initialed, dated, and corrected above the cross-out. The log will contain, but is not limited to the following information:

- Date and time of sampling events
- Sampler's name and responsibility/position
- Site conditions
- Calibration measurements
- Field monitoring readings, if any
- Field measurements
- Weather conditions
- Equipment and techniques used
- Condition of equipment

- Sample conditions (color, odor)
- Purging procedure and amount of water purged (for well sampling)
- Sampling location
- Sample preservation techniques
- Blind sampling number and corresponding Bechtel-internal sample reference number
- Personal protection levels used
- Names and titles of all field personnel
- List of site visitors

Field sampling personnel will record field sampling results immediately after the measurement or analysis is completed. If there is any deviation from standard documented procedures, or change in any recorded data point, the change must be noted in the bound field log book.

Field sampling personnel shall make copies of field log sheets by 1:00 P.M. on Friday of each week. A cover sheet will be prepared noting the book number, site, CTO number, and date of transfer for each log book package. The cover sheet and copied pages will then be transmitted via overnight mail to Data Management in San Diego. The PDCC number assigned to the transmitted copy package will be the same as that assigned to the log book at the beginning of work.

The bound field log book will be stored in a secured area at the field office and signed in and out each time the logbook is taken out of this area. Upon completion of the log book a copy will be made and the original forwarded to the PDCC for storage. The log book copy will be stored at the jobsite until the copy is transferred to the CTO Lead at the conclusion of field activities.

Appendix A contains a series of sample documentation forms and logs which may be applicable during RI/FS activities for OU4 and OU5. They include:

- Navy Clean Communication Distribution List
- Field Data Verification Notification and Upload Request Form
- Database Change Request Form
- Delivery Order for Sample Event Initiation Record Form
- Sample Selection Summary Form
- Environmental Sampling Planning Log
- Field Data Transfer Form (Aqueous Samples)
- Field Data Transfer Form (Solid Samples)
- Daily Field Report
- Well Sampling Record

- Borehole Log (pages 1 and 2)
- Well Development Log
- Well Construction Details (Well Log)
- Aquifer Pumping Test (pages 1 and 2)
- Water Level Measurements - Field Data Sheet
- Custody Seal
- Sample Labels
- Chain of Custody Record

Section 5
DATA REVIEW

The CLEAN II environmental data management program will provide support for decisions made during the RI/FS activities for OUs 4 and 5. Since data quality is an important factor in both the decision making process and for providing legal defensibility, the data review process described in this section establishes a data verification and validation program to obtain the appropriate data quality for each OU.

5.1 ENVIRONMENTAL FIELD DATA REVIEW PROCESS

Environmental field data will include, but are not limited to, soil boring logs, well development logs, well construction logs, field sampling logs, geophysical surveys, water level measurements, and aquifer testing results. At the end of the sampling event, and prior to transfer to PDCC, field data will be reviewed by the CTO project lead or appropriate technical designee for content and to ascertain whether data is in compliance with proper field procedures. Following review of the data, the CTO project lead or designee will complete and sign a Field Data Verification Notification and Upload Request changes are made to the log, form, or other data documentation, each correction must be noted on the Field Data Verification Notification and Upload Request Form. Once the CTO project lead or designee completes the review of the data, the original, accompanied by the Field Data Verification Notification and Upload Request Form and distribution list, is forwarded to the PDCC and subsequently to the CLEAN II environmental database, as discussed in Section 2.1, Project File Control. Soil boring log forms and monitoring well completion forms are the exception, requiring submittal by the PDCC to the geotechnical INTegrator (gINT®) program operator prior to forwarding into the CLEAN II database. The gINT® program is discussed in detail below. Figure 5-1 provides a flow-chart describing the environmental field data review process.

5.1.1 Geotechnical INTegrator Software (gINT®)

gINT® is a computer software package which combines database and graphical output capabilities for manipulating and presenting geotechnical data. A detailed description of gINT® is provided below.

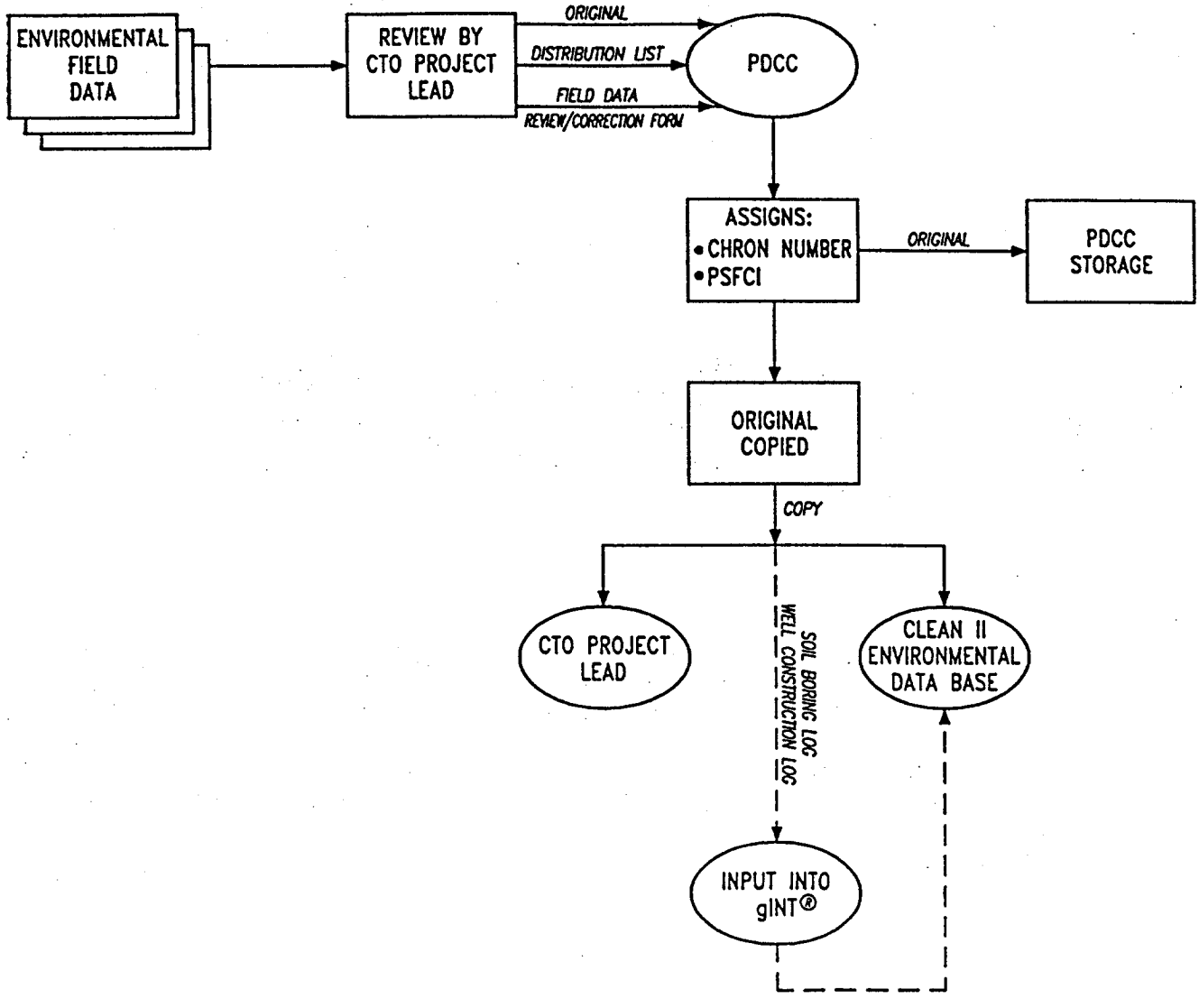

FIGURE 5-1

ENVIRONMENTAL FIELD DATA REVIEW PROCESS

As discussed in Section 5.1, the final borehole log and well completion log are submitted to the PDCC. A copy of each log is then distributed to the originating CTO project lead and field geologist/engineer. The CTO project lead assigns a CLEAN II registered geologist/engineer who is not involved in the site-specific field work to check the borehole log and/or monitoring well completion log for technical adequacy and conformance to standard procedures. Any subsequent editing of the final field logs will be made on a copy of the particular log; the editor will sign the log copies and indicate the date of any edits made. A Field Verification Notification and Upload Request Form will be filled out and signed for each log. The edited log copies and the Data Review/Correction Forms will be forwarded to PDCC and to GINT®, located in Bechtel's San Francisco office. Upon receipt in San Francisco, the borehole log and well completion log are computerized using the gINT® software. Once in gINT®, a checkprint is reviewed by the originating geologist/engineer. After any additional corrections or revisions are made, the final gINT® logs and associated ASCII output files are sent by the gINT® program group, via the PDCC, to the CLEAN II database.

5.2 SAMPLE ANALYSIS DATA REVIEW PROCESS

All sample analysis data (eg., laboratory analytical results) will be subjected to the following levels of review: data verification, contract compliance screening (CCS), data validation, and data analysis. The sample analysis data review process is presented on Figure 5-2.

5.2.1 Sample Analysis Data Verification

Data verification is a non-technical data review process in which analytical data is checked for correctness of information and non-technical errors (e.g., transcription errors). The verification process will be accomplished by comparison of the electronic copy to the associated hard copy of the laboratory data deliverable. Any discrepancies will be forwarded to an appropriate reviewer (i.e., technical specialist) for resolution. If there are major anomalies in the submittal, it will be returned to the supplier via the CLC for resolution, with notification to the CTO project manager and CTO lead. No further review is performed on the data until the corrections are made and the supplier resubmits the data through the CLC who directs it to the PDCC. When discrepancies no longer exist within the data package, the review process will continue to the contract compliance screening (CCS) stage as required for the analytical data set.

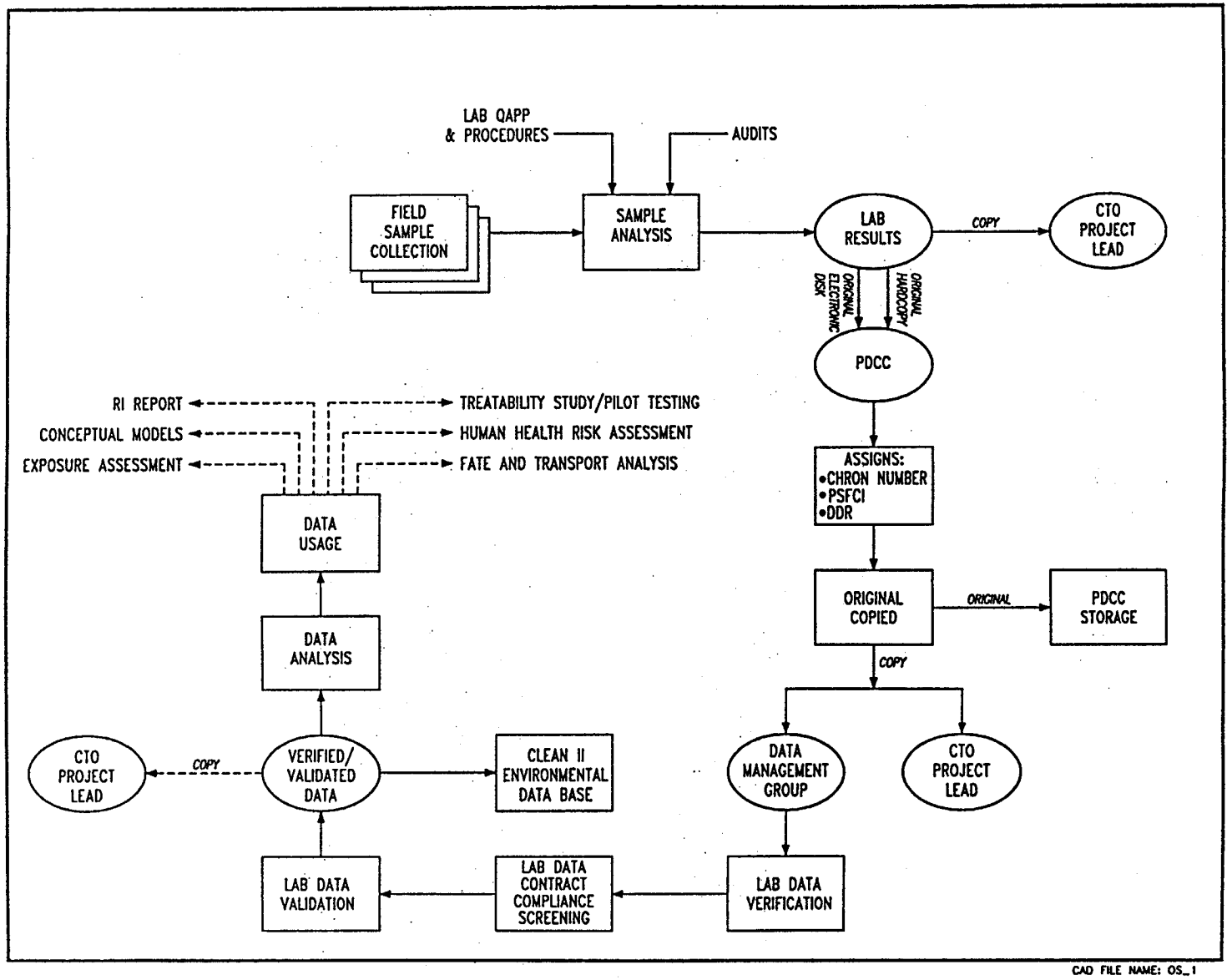

FIGURE 5-2

SAMPLE ANALYSIS REVIEW PROCESS

5.2.2 Sample Analysis Contract Compliance Screening

The contract compliance screening (CCS) stage will follow the verification of the analytical data. CCS will review the data set to determine if the data are:

- Accurately transcribed
- Quantified and qualified
- Collected and analyzed in accordance with approved procedures
- In compliance with all aspects of the contract specifications under which the work was performed
- In compliance with analytical and QA/QC protocols

All project personnel performing CCS will have complete familiarity with the contract (CTO 037) for which the data have been generated. Contract-specific checklists will be developed and followed in order to ascertain that contract specifications were or were not met. If there are major non-compliances with the contract for a data set, the review process is stopped and the data are returned to the supplier via the PDCC. When the CCS process is completed, the results are reviewed and subject to approval by the DBM for project use. Any disapproval by the DBM is resolved by a peer review process, with all related peer review documentation processed through PDCC. Upon resolution, the analytical data proceed to the next stage, data validation, as required by the sample analysis data review process.

5.2.3 Sample Analysis Data Validation

Data validation specialists will perform a detailed, technical review of data for adherence to guidelines, protocols, or requirements established by the United States Environmental Protection Agency (USEPA), Department of Navy, or other state or local agency as required by the CLEAN II program. The purpose of the validation process is to identify sample analysis data which are not collected or documented in accordance with specified protocols outlined in the QAPP and the SAP, and to evaluate the severity of non-compliance.

As a first step, all sample analysis data should be informally reviewed at the time of collection by the Sample Team Leader, based on the quality control checks outlined in the QAPP and the SAP. Once this is accomplished, and the data have progressed through the verification and CCS stages, the validation process is performed by personnel with knowledge and experience pertinent to each type of analysis. The sample analysis data may be

validated against the following criteria, and as specified in the QAPP and SAP:

- Sample location, date, time, and adherence to the plan
- Field instrumentation and calibration
- Sample collection protocol (eg., purging of wells)
- Sample volume
- Sample preservation
- Blanks collected and submitted with each respective sample set
- Duplicates collected and submitted with each respective sample set
- Sample documentation protocol
- Chain of custody protocol
- Sample shipment

The sample analysis data collected from OUs 4 and 5 during the RI/FS activities will require NEESA **level D** data validation. The analytical data requested at QC level D are equivalent to the EPA level IV requirements. The required deliverable for this level is a complete Contract Laboratory Protocol (CLP) package including all associated raw data. These data receive a full CLP validation performed under the EPA Laboratory Data Validation Functional Guidelines for Evaluating Organic Analyses (latest revision) and the EPA Laboratory Data Validation Functional Guidelines for Evaluating Inorganic Analyses (latest revision). Appendix C contains analytical laboratory review protocol for review and validation of QA/QC, volatile, semivolatile, organic, and inorganic analyses.

To determine sample analysis accuracy (i.e., how well measurement values match the true, known values) and precision (i.e., the uniformity of scatter of the individual measurements in relation to each other) for OU4 and OU5, the following QA/QC samples will be submitted to the subcontractor laboratory for analysis, at intervals described in the QAPP and SAP:

- Duplicate samples
- Equipment rinsate blanks
- Trip blanks
- Decontamination water supply blanks (field blanks)
- Harbor sediment and reference samples

5.2.4 Results of Sample Analysis Data Review Process

The sample analysis data review process will result in categorizing the data according to the following classification criteria:

- **Raw**-data in original format, as received from digital instruments or subcontractors. Raw data are most often received in American Standard Code for Information Interchange (ASCII) format. Analytical result files generally contain ASCII characters in a specific format: CLP Standard Agency Format.

- **Unverified-unvalidated (UU)**-newly entered data in the database which have not undergone the verification/validation process

- **Verified-invalid (VI)**-data which have been verified and do not meet minimum QA criteria

- **Verified-unvalidated (VU)**-data which have been verified but have not undergone the validation process

- **Verified-valid (VV)**-data which have been verified and validated for technical content and reasonableness; QA criteria are met

A complete listing of all qualifiers and status codes which may accompany the sample analysis data after the review process is presented in Appendix D.

VV data will be considered for statistical analysis. VU data may also be included in analyses, but UU data will be excluded from any use other than initial evaluations to support further site studies.

The quantifier codes will be determined after the technical specialists have reviewed the data. Data deemed to meet the minimum QA criteria include data that were collected, analyzed, and documented using standard, approved procedures. These data are accompanied by documentation that demonstrates the following:

- Sampling objectives were clearly defined, and the data were collected to meet appropriate regulatory, reporting, confirmation, characterization, or monitoring goals.

- Sampling design demonstrates that appropriate media were sampled, appropriate parameters were measured, appropriate samples were taken at the right place and time, and the samples yielded representative results.

- Sample collection followed approved procedures and protocol (per the SAP) that were appropriate to yield reliable and reproducible results.

- Data reporting included sufficient supporting information to allow clear interpretation of the data.

- QA/QC procedures were clearly documented and implemented.

Unacceptable data are those that do not fulfill the requirements listed above. New data will be evaluated to ensure that they meet all of these criteria. Insufficient or questionable data will be further documented or supplemented by collecting more information as required.

Unvalidated data (for which it is uncertain whether minimum QA/QC criteria are met) include data originally collected for screening activities or documentation purposes. These data may not have followed strict QA/QC procedures, may have been analyzed by less-sensitive techniques, or may have been reported with inadequate supporting documentation or analytical protocols. However, these data may be used to justify data collection, fill in gaps in other data to enhance characterizations of problem areas, or indicate areas where further data collection is not necessary.

Unverified/unvalidated data will be stored in a temporary repository until the appropriate level of data review has been completed.

Once the sample analysis data review process is completed, corrections are made, and limitations are identified, data will be loaded into the production database and released for project use. All subsequent changes must be made by submitting a Database Change Request Form (refer to Appendix A) through the PDCC to the data management department.

5.2.5 Data Analysis

Following data verification, contract compliance screening, and validation, data will undergo data reduction and interpretation, which constitutes data analysis. Data analysis will present the data in a useful manner to aid the end-user during preparation of the RI/FS report, risk assessment, etc. Table 5-1 contains a listing of currently-available software that provides modeling capability for verified/validated data.

5.3 HISTORICAL DATA REVIEW PROCESS

Depending on the availability and extent of historical documentation for any existing field and analytical data, the data will be screened based on the same criteria as newly acquired data. The approved historical data will be

used to assist in reviewing newly-acquired data (e.g., seasonal variations, trends) and will be subjected to the data analysis process described in Section 5.2.5.

The Long Beach Naval Shipyard (LBNSY) Site Inspection (SI) performed in 1992 by CH2M HILL yielded data which will be acquired, examined, and referenced by Bechtel during RI/FS field activities on an as-needed basis. The SI data (available through CH2M HILL) include:

- Soil boring logs
- Survey reports
- Analytical results
- Data validation summary
- Geotechnical lab results

The soil boring logs and the analytical reports are available electronically. Requested data will be exported into an ASCII conversion file, converted into ORACLE by Bechtel data management, and downloaded into the CLEAN II environmental database. Survey reports, geotechnical lab results and the data validation summary are available on hard copy. Hard copy data will need to be retrieved by the CTO project lead for review prior to inclusion in the database.

TABLE 5-1

LISTING OF MODELING SOFTWARE

Atmospheric Models

CHEMDAT7	ISC
Valley Dispersion Model	

Surface Water Computer Models

HEC-1	HEC-2
FESWMS-2DH	SNTEMP
MITEMP	WASP 5.0
QUAL2E	CE-QUAL-R1
CE-QUAL-R1V1	HEC-6
TABS	SED3D
CREAMS	SWMM, Version 4
HSPF9	

Groundwater Computer Models

One-dimensional Princeton Unsaturated Code
Two-dimensional Princeton Unsaturated Code
Hydrological Evaluation of Landfill Performance (HELP) Model
MODFLOW
USGS-MOC, OR KONBRED
SUTRA (Saturated-Unsaturated Transport)
SWIFT 386, Release 2.51
FEMWATER
FEMWASTE
BLT

Radiological and Chemical Dose Models

SOURCE2 (Bechtel SCP NE602)	CYLSEC (Bechtel SCP NE650)
PATHRISK	BECRISK
RESRAD	QAD-GP
MSHIELD	

Data Analysis Tools

SAS	ARC/INFO
GEO-EAS, Version 1.2.1	SCOUT
SAMPSIZE	AQTESOLV

Section 6
DATA USES

Data generated during the RI will be continuously monitored, screened and validated. The data will be used by Bechtel to define the nature and extent of contamination, and to identify exposure point(s), contaminant transport route(s), potential receptor(s), and environmental and public health threat(s). During the FS, data generated will be used by Bechtel to evaluate and identify cost-effective treatment alternatives which comply with all applicable or relevant and appropriate requirements (ARARs).

APPENDIX A

DOCUMENTATION FORMS

NAVY CLEAN COMMUNICATION DISTRIBUTION LIST

PRELIMINARY

JOB 22214
NAVY CLEAN
COMMUNICATION DISTRIBUTION

	Route	Copy W/A	Copy W/O	Action
PMO				
J. A. Moe				
J. W. Kluesener				
J. E. Chapman				
F. K. Dooley				
R. W. Fisher				
B. T. Kown				
A. S. Masvidal				
J. L. Matthews				
M. L. McKee				
BROWN & CALDWELL				
V. Bedi				
KLEINFELDER				
J. Jackson				
PMs				
E. Houle				
K. Kapur (L.A.)				
W. Shipman (L.A.)				
E. Randall (L.A.)				
N. Kawamoto (50/18/D5)				
D. Umstot (45/31/A32)				
S. Drew (50/19/D59)				
J. Argyres (50/18/D10)				
OTHER DISTRIBUTION				
G. Benz (50/18/D18)				
R. Hughes (50/18/B38)				
DCC Master File		X		

Comm Control No.:

Date:

Subject Code:

___ Incoming ___ Outgoing

___ Fax
___ Regular Mail
___ Overnight Service
___ Second Day Delivery
___ Hand Deliver or Phone

Subject: _____

From: _____ To: _____

Response Required:

☐ Yes

☐ No

By: _____ To: _____
Due Date: _____

Closes Action Item: _____

NOTES:

FIELD DATA VERIFICATION, NOTIFICATION AND UPLOAD REQUEST FORM

CLEAN II

FIELD DATA VERIFICATION NOTIFICATION
AND
UPLOAD REQUEST

FORM NO: _____
(CTO # - UR - Sequential #)

DATA TYPE: _____

DATA COLLECTION DATES: ___/___/___ TO ___/___/___

DATA GENERATOR: _____

RAW DATA FILE NAME: _____

DATA ENTRY COMPLETED BY: _____ DATE: ___/___/___

DATA VERIFIER: _____ DATE: ___/___/___

CTO LEADER or Designee: _____ DATE: ___/___/___

SUBMIT COMPLETED FORM TO CLEAN II DATABASE MANAGER

DATABASE CHANGE REQUEST FORM

DELIVERY ORDER FOR SAMPLE EVENT INITIATION RECORD FORM

DELIVERY ORDER FOR ANALYTICAL SERVICES

SAMPLE EVENT INFORMATION RECORD (SEIR)

DO NUMBER (CTO NO.-EVENT NO.) _____ FILE NUMBER _____

FACILITY _____

LABORATORY NAME _____ NOT-TO-EXCEED VALUE $ _____

The sampling event is scheduled to begin on _____ and to be completed on _____

ANALYTE (ENTER NAME)	MATRIX (SOLID, LIQUID, GAS)	PAY ITEM NO.	TAT (7,14, 30 DAY)	QC LEVEL (C,D OR E)	SAMPLE TYPE QUANTITIES		TOTAL NO. OF SAMPLES	CONTAINERS		PRESERVATIV
					ROUTINE	QC		NO.	(SIZE,MATERIAL)	

PRE-PRESERVE CONTAINERS ☐ YES ☐ NO Special Instructions: _____

SHIP SUPPLIES TO: _____

_____ CTO LEADER: _____ DATE: _____

_____ CONT. LAB COOR: _____ DATE: _____

_____ SUBCONT. ADMIN: _____ DATE: _____

DATE SUPPLIES REQUIRED: _____ SUBC. LAB COOR: _____ DATE: _____

IN NO EVENT SHALL THE NOT-TO-EXCEED VALUE BE EXCEEDED WITHOUT PRIOR WRITTEN AUTHORIZATION BY THE SUBCONTRACT ADMINISTRATOR

ENVIRONMENTAL SAMPLING PLANNING LOG

ENVIRONMENTAL SAMPLING PLANNING LOG

Description

The environmental sampling planning log is intended to serve as a pre- and post-planning aid for effective sampling documentation. The log is currently stored on LOTUS 1-2-3 software. The completed log will become a part of the permanent project file. The log, however, is not intended for laboratory submittal.

Environmental Sampling Planning Log Data Entry Codes

Sample No.

The blind sample number submitted to the laboratory ("laboratory container number")

Sample Type

Code	Description
REG	Regular RI/FS sample
DUP	Duplicate sample
RSB	Rinsate Blank
PSB	Preservative blank
TPB	Trip blank
FDB	Field blank
PTS	Point Source
BLB	Blind Blank
BLS	Blind Spike
SPL	Split
WBL	Source Water Blank
MS	MS/MSD (matrix spikes)

Matrix

Code	Description
AIR	Air
SOG	Soil gas
LIQ	Liquid
SOL	Solid
IHS	Industrial hygiene
HAS	Headspace
FLO	Flora
FAU	Fauna
SFW	Surface water
GWT	Ground water
SST	Surface water storm event
SED	Sediment
SEP	Seeps
SLG	Sludge
SPR	Springs
WMG	Waste Management
OIL	Oil
PTW	Potable water
LCH	Leachate
SBS	Subsurface soil
SFS	Surface soil

Container

Code	Description
GVA	40-ml amber vial
GJO	120-ml amber glass
GV2	125-ml clear glass
GJ8	250-ml amber glass
AB1	1-L amber glass
AB2	2.4-L amber glass
AB4	4-L amber glass
2PB	250-ml polyethylene bottle
5PB	500-ml polyethylene bottle
1PB	1-L polyethylene bottle
PC4	4-L cubitainer
2CC	2-L ice cream carton
SST	Stainless Steel Tube
8TF	8 oz. widemouth - Teflon
SEP	8 oz. widemouth - TFLN

Preservative

Code	Description
HA	Hydrochloric Acid
NA	Nitric Acid
SH	Sodium Hydroxide
SA	Sulfuric Acid
ZA	Sodiumhydroxide/zinc acetate
Z	None

Time

The time (military) which the sample is collected

COC Number

The chain of custody number

Lab Sample Number

The identification number which is assigned to the sample by the subcontractor laboratory

Analysis Requested/Results

The concentration of chemical constituent determined after laboratory analysis

Comments

Any comments or observations which effect the sample or analysis

PAGE _____ OF _____

ENVIRONMENTAL SAMPLING PLANNING LOG

SAMPLE DATE: _____ LABORATORY: _____ SHIR NO.: _____ JOB NO.: _____ SITE: _____

SAMPLE NO.	STATION I.D.	MATRIX	SAMPLE TYPE	DEPTH	CNTNR.	PRESR. (4°C)	COC NO.	LAB SAMPLE NO.	ANALYSIS REQUESTED / RESULTS						COMMENTS
									VOC	SVOC	METAL	PCB / PST	TPH	OTHER	

FIELD DATA TRANSFER FORM
(AQUEOUS SAMPLES)

SAMPLE EVENT NO.:
SAMPLER:
LOGBOOK:
SITE NO.:

Field Data Transfer Form
Aqueous Samples

Sample No.	Station ID	Matrix	Sample Type	Analyses	Temp. / Preserv.	Container	Filter Flag (F/U)	COC No.	Depth sample taken	pH	Temp.	Cond.	Other	Sample Date	Sample Time	Notes

COMMENTS : _____

Submit Form to CLEAN II DBM

Matrix

Code	Description
AIR	Air
SOG	Soil gas
LIQ	Liquid
SOL	Solid
IHS	Industrial hygiene
HAS	Headspace
FLO	Flora
FAU	Fauna
SFW	Surface water
GWT	Groundwater
SST	Surface water storm event
SED	Sediment
SEP	Seeps
SLG	Sludge
SPR	Springs
WMG	Waste management
OIL	Oil
PTW	Potable water
LCH	Leachate
SBS	Subsurface soil
SFS	Surface soil

Preservative

Code	Description
HA	Hydrochloric Acid
NA	Nitric Acid
SH	Sodium Hydroxide
SA	Sulfuric Acid
ZA	Sodium hydroxide/ zinc acetate
Z	None

Sample Type

Code	Description
REG	Regular sample
DUP	Duplicate sample
RSB	Rinsate blank
PSB	Preservative blank
TPB	Trip blank
FDB	Field blank
PTS	Point Source
BLB	Blind blank
BLS	Blind spike
SPL	Split
WBL	Source Water Blank
MS	MS/MSD (matrix spikes)

Container

Code	Description
GVA	40-ml amber vial
GJO	120-ml amber glass
GV2	125-ml clear glass
GJ8	250-ml amber glass
AB1	1-L amber glass
AB2	2.4-L amber glass
AB4	4-L amber glass
2PB	250-ml polyethylene bottle
5PB	500-ml polyethylene bottle
1PB	1-L polyethylene bottle
PC4	4-L cubitainer
2CC	2-L ice cream carton
SST	Stainless Steel Tube
8TF	8 oz. Widemouth - Teflon
SEP	8 oz. Widemouth - TFLN

FIELD DATA TRANSFER FORM
(SOLID SAMPLES)

SAMPLE EVENT NO.:
SAMPLER:
LOGBOOK:
SITE NO.:

Field Data Transfer Form
Solid Samples

Sample No.	Station ID	Matrix	Sample Type	Analyses	Temp/ Preserv.	Container	COC No.	Sample Depth (feet) BEGIN	END	Sample Date	Sample Time	Notes

COMMENTS : _____

Submit Form to CLEAN II DBM

Matrix

Code	Description
AIR	Air
SOG	Soil gas
LIQ	Liquid
SOL	Solid
IHS	Industrial hygiene
HAS	Headspace
FLO	Flora
FAU	Fauna
SFW	Surface water
GWT	Groundwater
SST	Surface water storm event
SED	Sediment
SEP	Seeps
SLG	Sludge
SPR	Springs
WMG	Waste management
OIL	Oil
PTW	Potable water
LCH	Leachate
SBS	Subsurface soil
SFS	Surface soil

Preservative

Code	Description
HA	Hydrochloric Acid
NA	Nitric Acid
SH	Sodium Hydroxide
SA	Sulfuric Acid
ZA	Sodium hydroxide/ zinc acetate
Z	None

Sample Type

Code	Description
REG	Regular sample
DUP	Duplicate sample
RSB	Rinsate blank
PSB	Preservative blank
TPB	Trip blank
FDB	Field blank
PTS	Point Source
BLB	Blind blank
BLS	Blind spike
SPL	Split
WBL	Source Water Blank
MS	MS/MSD (matrix spikes)

Container

Code	Description
GVA	40-ml amber vial
GJO	120-ml amber glass
GV2	125-ml clear glass
GJ8	250-ml amber glass
AB1	1-L amber glass
AB2	2.4-L amber glass
AB4	4-L amber glass
2PB	250-ml polyethylene bottle
5PB	500-ml polyethylene bottle
1PB	1-L polyethylene bottle
PC4	4-L cubitainer
2CC	2-L ice cream carton
SST	Stainless Steel Tube
8TF	8 oz. Widemouth - Teflon
SEP	8 oz. Widemouth - TFLN

DAILY FIELD REPORT

DAILY FIELD REPORT

CLEAN II

DATE:	Page of
JOB NO. 22214-	FACILITY:
SITE:	
GEOLOGIST/ENGINEER:	

ADDITIONAL CLEAN II FIELD STAFF:

UBCONTRACTOR:	WEATHER CONDITIONS:

EQUIPMENT	HOURS WORKED	WORK PERFORMED

FIELD ACTIVITIES/COMMENTS:

DATA TRANSMITTED WITH THIS REPORT:

WELL SAMPLING RECORD

CLEAN II

WELL SAMPLING RECORD

FACILITY:		WELL ID. NO.:
JOB NO. 22214-	SITE:	PREPARED BY: _____ CHECKED BY: _____

	PURGE METHOD (X)	SAMPLING METHOD (X)
HAND PUMP		
SUBMERSIBLE PUMP		
BAILER		
OTHER		

PURGING CRITERIA:

REMARKS (Include depth of pump inlet, if used):

BOREHOLE DIAMETER: _____

CASING DIAMETER: _____

REF. POINT: _____

DEPTH TO:

WATER LEVEL at t_0: _____

TOP OF FILTER PACK: _____

TOP OF SCREEN: _____

BOTTOM OF SCREEN: _____

TOTAL BOREHOLE DEPTH: _____

DATE OF PURGING:

DATE AND TIME OF SAMPLING:

WEATHER:

AMBIENT AIR TEMPERATURE:

CALCULATED BOREHOLE VOLUME:

SUBCONTRACTOR FOR PURGING:

ANALYSES TO BE PERFORMED:

NUMBER/TYPE OFSAMPLE CONTAINERS:

LABORATORY:

DATE SHIPPED:

VIA:

SPECIAL HANDLING/PRESERVATIVES:

PURGING DATA			CUMULATIVE TOTAL REMOVED		FIELD PARAMETERS				COMMENTS
TIME		WATER REMOVED (gal.)	GAL.	BOREHOLE VOLUMES	pH	CONDUCTIVITY	TEMP.	TURBIDITY	
BEGUN	FINISH								

BOREHOLE LOG

BOREHOLE LOG

PROJECT and JOB NUMBER: *CLEAN II* 22214		SHEET NO. 1 OF	HOLE NO.
DRILLER	SITE and LOCATION	OVERBURDEN	BEGUN
DRILL MAKE AND MODEL	COORDINATES / LOGGED BY:	ROCK (FT)	COMPLETED
HOLE SIZE and/or CORE SIZE/DIAMETER	GROUND EL. & DEPTH/EL. GROUND WATER / / / CHECKED BY:	TOTAL DEPTH	UPDATE

Organic Vapor Reading (ppm)	Core RQD %	Core/Soil Recovery (%)	Core Length/ Smplr Advance	Blow Counts or Recovery (ft)	Core Run No./ Sampler Type	Elevation in Feet	Depth in Feet	Graphics	Sample	Description and Classification	(Template: NAVY) Remarks:

	SITE and LOCATION	HOLE NO.

BOREHOLE LOG

PROJECT and JOB NUMBER	SHEET NO.	HOLE NO.
CLEAN II 22214	OF	

(Template: NAVY)

Orga Vapor Reac (ppm)	Core RQD %	Core/Soil Recovery (%)	Core Length Smpir Advance	Blow Counts or Recovery (ft)	Core Run No./ Sampler Type	Elevation in Feet	Depth in Feet	Graphics	Sample	Description and Classification	Remarks:

SITE and LOCATION

HOLE NO.

WELL DEVELOPMENT LOG

Bechtel

WELL DEVELOPMENT

PROJECT	WELL NO.
CLEAN II	

JOB NO.	SITE	PREPARED BY
22214		

METHOD

PUMP _____
BAILER _____
GAS _____
OTHER _____

DEVELOPMENT CRITERIA

REMARKS

HOLE DIAMETER d_h = _____
WELL CASING
INSIDE DIAM $d_W ID$ = _____
OUTSIDE DIAM $d_W OD$ = _____
DEPTH TO:
WATER LEVEL H = _____
BASE OF SEAL S = _____
BASE OF WELL TD = _____
EST. FILTER PACK POROSITY P = _____

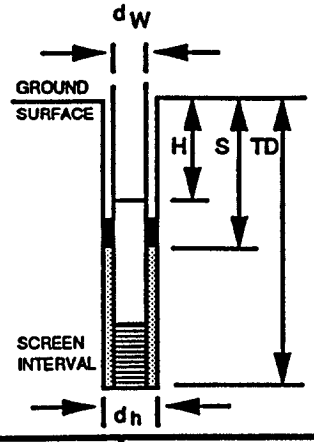

WELL VOLUME CALCULATION

CASING VOLUME =

$$V_c = \pi\left(\frac{d_w ID}{2}\right)^2 (TD - H) = 3.14\left(\frac{\quad}{2}\right)^2 (\quad - \quad) =$$

FILTER PACK PORE VOLUME =

$$V_f = \pi\left[\left(\frac{d_h}{2}\right)^2 - \left(\frac{d_w OD}{2}\right)^2\right](TD - (S \text{ or } H))(P)$$

$$= 3.14\left[\left(\frac{\quad}{2}\right)^2 - \left(\frac{\quad}{2}\right)^2\right](\quad - \quad)(\quad) =$$

(If S > H use S. If S < H, use H)

TOTAL WELL VOLUME =

$V_T = V_c + V_f =$ + = $ft^3 \times 7.48 =$ GAL

DEVELOPMENT LOG					CUMULATIVE TOTAL REMOVED		WATER CHARACTER				COMMENTS
DATE	TIME BEGIN	TIME FINISH	METHOD	WATER REMOVED GAL	GAL	WELL VOLUMES	pH	CONDUCTIVITY µ mhos	TEMP °F	TURBIDITY NTU	

Bechtel

WELL DEVELOPMENT

PROJECT	WELL NO.
CLEAN II	

JOB NO.	SITE	PREPARED BY
22214		

DEVELOPMENT LOG					CUMULATIVE TOTAL REMOVED		WATER CHARACTER				COMMENTS
	TIME		METHOD	WATER REMOVED GAL	GAL	WELL VOLUMES	pH	CONDUCTIVITY µ mhos	TEMP °F	TURBIDITY NTU	
	BEGIN	FINISH									

WELL CONSTRUCTION DETAILS (LOG)

WELL CONSTRUCTION DETAILS

	PROJECT and JOB NUMBER *CLEAN II* 22214		SHEET NO. 1 OF 1	HOLE NO.
	SITE and LOCATION		HOLE SIZE	BEGUN
'LLER	COORDINATES	LOGGED BY:	TD OF WELL	COMPLETED
TOP of CASING ELEV. / GROUND ELEV.	GROUND WATER DEPTH/ELEVATION ⚷ /	CHECKED BY:	TD of HOLE	UPDATE

(Template: AWELL)

Well Construction Details	Elevation in Feet	Depth in Feet	Well Graphics	Graphics	Geologic Description and Classification
SURFACE COMPLETION, Dia. & Type: Bottom Depth = _____._____ft. CONDUCTOR CASING, Dia. & Type: Bottom Depth = _____._____ft. GROUT SEAL, Type: RISER CASING, Dia. & Type: BENTONITE SEAL Top of Seal = _____._____ft. Type: FILTER PACK Top of Filter Pack = _____._____ft. Type: SCREEN Top of Screen = _____._____ft. Dia. & Type: Slot Size & Type: Bottom of Screen = _____._____ft. SUMP Type: Bottom of Sump = _____._____ft.			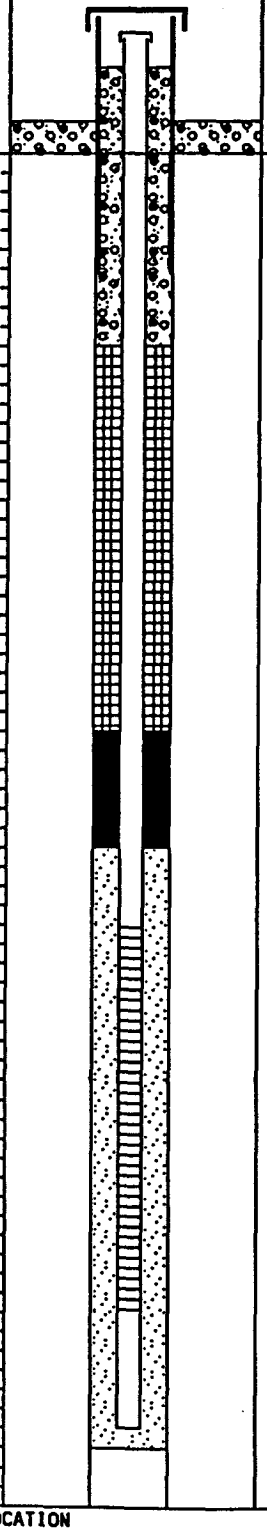		

See key for graphic symbols.	SITE and LOCATION	HOLE NO.

AQUIFER PUMPING TEST
(Pages 1 and 2)

AQUIFER PUMPING TEST

OBSERVATION WELL _____

PROJECT CLEAN II JOB No. 22214

TEST TYPE _____ DATE TEST BEGUN _____

PUMPING WELL _____ DIST. TO PPG WELL _____ (____)

SCREEN DEPTH (____): PPG WELL _____ OBS. WELL _____

FLOW MEAS. METHOD _____ PUMP _____

PUMPING RATE / HISTORY _____

_____ PUMPING PERIOD _____

REFERENCE POINT _____ ELEVATION _____

LOCATION _____ OBSERVER _____

TIME (24 HR DAY)	TIME-AFTER PUMP ON (____)	DEPTH TO WATER (____)	DRAW DOWN (____)	DISCHARGE (____)	TIME (24 HR DAY)	TIME-AFTER PUMP ON (____)	DEPTH TO WATER (____)	DRAW DOWN (____)	DISCHARGE (____)

AQUIFER PUMPING TEST

OBSERVATION WELL _____

PROJECT CLEAN II

JOB No. 22214

TEST TYPE: _____ DATE TEST BEGUN _____

PUMPING WELL _____ DIST. TO PPG WELL _____ (____)

TIME (24 HR DAY)	TIME-AFTER PUMP ON (____)	DEPTH TO WATER (____)	DRAW DOWN (____)	DISCHARGE (____)	TIME (24 HR DAY)	TIME-AFTER PUMP ON (____)	DEPTH TO WATER (____)	DRAW DOWN (____)	DISCHARGE (____)

WATER LEVEL MEASUREMENTS-
FIELD DATA SHEET

WATER LEVEL MEASUREMENTS

CLEAN II

WELL NO:_____

PAGE ___ OF ___

FACILITY:

JOB NO: 22214-

REFERENCE PT: (CIRCLE) TOC GRND SURFACE OTHER:

MEASUREMENT DATE	TIME	CALIBRATED BY: / INSTRUMENT SERIAL NO.	SURVEYED REFERENCE POINT ELEVATION (FT)	DEPTH TO WATER (FT)	WATER LEVEL ELEVATION (FT)	REMARKS	MONITORED BY: / CHECKED BY:

CUSTODY SEAL

CLEAN II

Signature: _____

CTO Number: _____

Date: _____

CLEAN II

Signature: _____

CTO Number: _____

Date: _____

CLEAN II

Signature: _____

CTO Number: _____

Date: _____

CLEAN II

Signature: _____

CTO Number: _____

Date: _____

CLEAN II

Signature: _____

CTO Number: _____

Date: _____

SAMPLE LABELS

CLEAN II CTO No: _____

Sample/No: _____

Collection Date: _____ Time: _____

Pay Item / Analysis:

_____

Preservation:

_____

Sampler's Name: _____ Initials: _____

Bottle ____ of _____ Field - Filtered ☐

CHAIN OF CUSTODY RECORD

CLEAN II

CHAIN OF CUSTODY RECORD

Site Name: _____

Job Number: _____

Sampler's Name(s): _____

Sampler's Signature(s): _____

Site Contact/Supervisor: _____

Analytical Laboratory Name: _____

Analytical Laboratory Address: _____

Field QC Package Number: _____

Field Logbook Page Number: _____

Date: _____

PAY ITEMS/ ANALYSES REQUIRED

QC LEVEL

C	D	E

TAT (in days)

2	7	14	30

SAMPLE ID NUMBER	DATE/TIME COLLECTED	STATION DESCRIPTION	SAMPLE MATRIX	ARCHIVE	NUMBER AND TYPE OF CONTAINER	PRESERVATION										REMARKS

RELINQUISHED BY	RECEIVED BY	DATE	TIME	REASON FOR TRANSFER

COMMENTS/INSTRUCTIONS:

METHOD OF SHIPMENT:

AIRBILL NO.:

TOTAL NO. OF COOLERS SHIPPED:

APPENDIX B

DATA TYPES, DATABASE TABLES, AND DATABASE TABLE CONTENTS FOR:

MEASUREMENT DATA
DESCRIPTIVE DATA
SAMPLE AND INFORMATION TRACKING DATA
REFERENCE DATA

DATA TYPES AND DATA BASE TABLE CONTENTS FOR ENVIRONMENTAL MEASUREMENTS

Data types and data base table names for environmental measurements are listed in this attachment as follows:

Data Type	Data Base Table
1- Analyte Concentrations	
01- Laboratory Analytical Results	RESULTS
2- Sampling Measurements	
01- Sample Depths, pH, amd Temperatures	SAMPLES
3- Geophysical Survey	
01- Fixed Frequency EM	FIELD_MEASUREMENTS
4- Piezometric Monitoring	
01- Groundwater Level Measurement Records	WATER_LEVEL_RESULTS
5- Meteorological Monitoring	
01- Precipitation, Temperature, Wind Speed, Humidity, and Barometric Pressure	SITE_CONDITIONS
6- Monitoring Well Measurements	
01- Well Development Logs	WELL_DEVELOPMENTS
02- Conductivity, pH, Eh, Turbidity, Dissolved Oxygen, and Temperature	WELL_RESULTS
03- Sample Depths, Purge Volume	WELL-SAMPLINGS
7- Surface Water Flow	
01- Surface Water Flow Measurement Record	FIELD_MEASUREMENTS
8- Surficial Site Screening	
01-RAD Walkover and Dose Rates	TBD
02-Soil Gas Measurements	TBD

DATA TYPES AND DATA BASE TABLE CONTENTS FOR DESCRIPTIVE ENVIRONMENTAL DATA

Data types and data base tables for descriptive environmental data are listed in this attachment as follows:

Data Type	Date Base Table
1- Site Identification	
01- Facilities	FACILITIES
02- Projects (CTOs)	SITES
2- Civil Survey	
01-Sampling Point Location	SAMPLE_STATIONS
3- Boring and Well Data	
01- Geologic/Drilling Record	SOIL_BORINGS
02- Well Installation Record	WELLS
03- Geophysical Survey Record	LITHOLOGY
4- Underground Storage Tank Data	
01- UST Construction, Capacity, Content, Depth, Status, etc.	TANKS
5- Units of Measurements	
01- Measurement Units and Definitions	UNITS
6- General References:	
01- Miscellaneous Notes	COMMENTS

DATA TYPES AND DATA BASE TABLE CONTENTS
FOR SAMPLE AND INFORMATION TRACKING DATA

Data types and data base tables for sample and information tracking are listed in this attachment as follows:

Data Type	Date Base Table
1- Sampling Event Planning and Preparation	
01- Sample Event Location and Scheduling	SAMPLING_EVENTS
02- Sample Event Information Tracking	SEIR
03- Sample Event Collection Requirements	SEIR_MATRIX
04- Sample Container Requirements	SEIR_CONTAINERS
2- Sample Collection and Custody Transfer Tracking	
01- Sample Container Tracking	CONTAINERS
02- Requested Analysis	CONTAINER_PAY_ITEMS
03- Chain of Custody Numbers, Field QC Packages, and Priority Definition	CHAINS_OF_CUSTODY
04- Sample Shipment Tracking	SHIPMENTS
05- Chain of Custody Transfers	TRANSFERS
06- Laboratory Processing	SAMPLE_DELIVERY_GROUPS
3- Data Source Tracking	
01- Identification of Data Providers	DATA_SOURCES
02- Data File Identification	DATA_FILES
03- Field Logs	LOG_BOOKS
04- Water Level Measurement	WATER_LEVEL_MEASUREMENTS
4- Historical Data Tracking	
01- Sampling Station Identifiers	STATION_ALIASES
5- Data Verification and Validation	
01- Data Base Modifications	TABLE_CHANGES
02- Analytical Data Qualifications	RESULT_QUALCODE

DATA TYPES AND DATA BASE TABLE CONTENTS FOR REFERENCE AND VERIFICATION DATA

Data types and data base tables for reference and verification data are listed in this attachment as follows:

Data Type	Data Base Table
1- Sample Analysis Data	
01- Radionuclide and Chemical Analyses Identification	ANALYTES
02- Analytical Method Identification	METHODS
03- Analytical Categories	ANALYTE_METHODS
04- Analytical Method Detection Limits	METHOD_DETECTION_LIMITS
05- Regulatory Concentration Limits	CRITERIA
06- Requested Analyses	PAY_ITEMS
07- Analyses Qualification	QUALIFIERS
08- Data Validation Qualifications	QUALIFICATION_CODES
09- Sample Analytical Result Types	RESULT_TYPES
2- Sample Collection Data	
01- Sample Collection Methods	COLLECTION_METHODS
02- Sample Container Types	CONTAINER_TYPES
03- Sample Preservatives	PRESERVATIVES
04- Sample Matrices	MATRICES
05- Sample Quality Control Levels	QUALITY_LEVELS
06- Field Sample Types	SAMPLE_TYPES
3- Field Measurements	
07- Measurement Instrumentation	INSTRUMENTS

APPENDIX C

ANALYTICAL DATA REQUIREMENTS:

STANDARD PACKAGE REVIEW

DATA VALIDATION PACKAGE FOR VOLATILES AND SEMIVOLATILES

DATA VALIDATION PACKAGE FOR INORGANICS

DATA VALIDATION PACKAGE FOR ORGANICS

STANDARD PACKAGE REVIEW

CTO: _____ AREA: _____ DATA CODE: _____ REQUEST NO.: _____

D-_____ LABORATORY LOT #: _____

SAMPLING DATE: _____ RECEIPT DATE: _____ MATRIX: _____

The above data package has been reviewed and the quality assurance and performance data summarized based upon specific method requirements. The general criteria used to determine the performance were based on an examination of:

- Chain-of-Custody
- Holding Times
- Preparation Blanks
- Surrogate Recovery
- Field Blanks, as applicable
- Preservation
- Laboratory Control Samples
- Matrix Spike %R Results
- Laboratory Precision Results
- Field Duplicates, as applicable

Overall comments regarding data: _____

_____

_____

_____

_____

_____

_____

_____

_____

Definition of symbols used in the validation of this data set:

A	Acceptable results
U	Analyte was analyzed for but not detected
J	Analyte was analyzed for and detected, but must be estimated due to quality control considerations.
UJ	Analyte was analyzed for but not detected, but must be estimated due to quality control considerations.
R	Quality Control evaluation indicates that the data are unusable.
+	Detect
ND	Non-detect

I. CHAIN-OF-CUSTODY

Are chains-of-custody present for all samples in the associated package?: _____

If chain-of-custody is not present, list samples and parameters for which chain-of-custody is not present:

Sample Number	Parameters

Is chain-of-custody properly executed for all samples within the associated package?: _____

If chain-of-custody has been improperly executed, list all samples and parameters affected:

Sample Number	Parameters

II. PRESERVATION/HOLDING TIMES

Were aqueous samples preserved properly: _____

Preservation for nonaqueous samples for all parameters is through refrigeration only.

II. PRESERVATION/HOLDING TIMES

Parameter	Sampling to Extraction	Extraction to Analysis	Regulatory[1] Limit	Acceptable (Yes/No)	Preservative	Acceptable (Yes/No)
Volatiles	_____	_____	14	_____	HCl to pH<2	_____
Semivolatile	_____	_____	7/40	_____	4°C	_____
Pesticide/PCB	_____	_____	7/40	_____	4°C	_____
Herbicide	_____	_____	7-10/40	_____	4°C	_____
_____	_____	_____	_____	_____	_____	_____
_____	_____	_____	_____	_____	_____	_____
_____	_____	_____	_____	_____	_____	_____
Metals	_____	_____	180	_____	HNO_3 to pH<2	_____
Mercury	_____	_____	28	_____	HNO_3 to ph<2	_____

Parameter	Sampling to Analysis	Regulatory[1] Limit	Acceptable (Yes/No)	Preservative	Acceptable (Yes/No)
Total Alkalinity	_____	14	_____	4°C	_____
Ammonia	_____	28	_____	H_2SO_4 to pH<2	_____

II. PRESERVATION/HOLDING TIMES (cont'd)

Parameter	Sampling to Analysis	Regulatory[1] Limit	Acceptable (Yes/No)	Preservative	Acceptable (Yes/No)
Bicarbonate Alkalinity	_____	14	_____	4°C	_____
BOD_5	_____	2	_____	4°C	_____
COD	_____	28	_____	H_2SO_4 to pH<2	_____
Cyanide	_____	14	_____	NaOH/ZnAc pH > 12	_____
Chloride	_____	28	_____	4°C	_____
Nitrate	_____	2	_____	4°C	_____
Nitrate-Nitrite	_____	28	_____	H_2SO_4 to pH<2	_____
Orthophosphorus	_____	2	_____	4°C	_____
Total Phosphorus	_____	28	_____	H_2SO_4 to pH<2	_____
Settleable Solids	_____	1	_____	4°C	_____
Sulfate	_____	28	_____	4°C	_____
TOC	_____	28	_____	H_2SO_4 to pH<2	_____
TOX	_____	7	_____	H_2SO_4 to pH<2	_____

II. PRESERVATION/HOLDING TIMES (cont'd)

Parameter	Sampling to Analysis	Regulatory[1] Limit	Acceptable (Yes/No)	Preservative	Acceptable (Yes/No)
Total Dissolved Solids	_____	7	_____	4°C	_____
Total Suspended Solids	_____	7	_____	4°C	_____
Total Petroleum Hydrocarbons	_____	Method-specific	_____	H_2SO_4 to pH<2	_____
Oil and Grease	_____	28	_____	H_2SO_4 to pH<2	_____
pH	_____	N/A	_____	N/A	_____
Conductance	_____	28	_____	4°C	_____
Corrosivity	_____	N/A	_____	N/A	_____
Flashpoint	_____	N/A	_____	N/A	_____
Reactivity-Cyanide	_____	14 days - liquid NA - solid	_____	N/A	_____
Reactivity-Sulfide	_____	7 days - liquid NA - solid	_____	N/A	_____
BTU	_____	N/A	_____	N/A	_____

[1] - Holding times assessed from date of sample collection.

II. PRESERVATION/HOLDING TIMES (cont'd)

TCLP Extraction:

Parameter	Collection to Extraction	Extraction to Preparation	Preparation to Analysis	Acceptable (Yes/No)
Volatile	(14)	N/A	(14)	_____
Semivolatile	(14)	(7)	(40)	_____
Mercury	(28)	N/A	(28)	_____
Other Metals	(180)	N/A	(180)	_____

Action: If samples are analyzed in excess of the holding times, approximate (J) results for that element. If the holding times are exceeded by a factor of 2, reject (R) the results for the analyte(s) exceeding holding times.

Remarks: _____

_____

III. BLANK ANALYSIS RESULTS (Inorganics)

Review all blanks (e.g., preparation, field, trip, and rinse) and verify that the results were accurately reported. Note any outliers on the table given below.

Action

Accept: All blanks (field, prep, initial, and continuing) with analyte concentrations < IDL.

Approximate: Flag all sample results >IDL but <5 times the amount in any blank (prep, initial, and continuing) as "U."

Reject: Samples associated with blank having gross contamination should be rejected for all associated analytes. (Flag "R")

NOTE: Action levels are determined by multiplying the highest concentration determined in any preparation, initial, or continuing blank by a factor of five. All data associated with the applicable blank is then evaluated against the blanks as above. Qualification based on field or rinse blanks is at the discretion of the reviewer and is based on professional judgement. Use extra pages, if necessary.

III. BLANK ANALYSIS RESULTS (Inorganics) (cont'd)

Parameter	Run Date	Type of Blank	Conc'n	Conc (5x)	Samples Affected	Action

Flag results on Form I according to analyte and sample number.

Remarks: _____

III. BLANK ANALYSIS RESULTS (Organics)

Review all blanks (e.g., preparation, field, trip, and rinse) and verify that the results were accurately reported. Note any preparation blank outliers on the table given below. NOTE: Qualification based on field, trip, and rinse blanks is at the discretion of the reviewer and is based upon professional judgement.

Action

Sample results shall be qualified "U" in accordance with the following guidelines:

Common contaminants: Sample concentration ≤10x concentration of analyte in the blank.

Other contaminants: Sample concentration ≤5x concentration of analyte in the blank.

III. BLANK ANALYSIS RESULTS (Organics) (cont'd)

Rules for flags:

1. Sample result is greater than the CRQL but less than the required 5 or 10x amount of contaminant in the blank:

	5x	10x
Blank Result	7	7
CRQL	5	5
Sample Result	30	60
Qualified Sample Result	30U	60U

2. Sample result is less than CRQL and is also less than the required 5 or 10x amount of contaminant in the blank:

	5x	10x
Blank Result	6	6
CRQL	5	5
Sample Result	4J	4J
Qualified Sample Result	5U	5U

3. Sample result is greater than the required 5 or 10x amount of contaminant in the blank:

	5x	10x
Blank Result	10	10
CRQL	5	5
Sample Result	60	120
Qualified Sample Result	60	120

Analysis Type:

Blank ID	Associated Samples and Action	Compound	Conc'n (µg/L or kg)	CRQL

III. BLANK ANALYSIS RESULTS (Organics) (cont'd)

Analysis Type:

lank ID	Associated Samples and Action	Compound	Conc'n (µg/L or kg)	CRQL

Remarks: _____

IV. MATRIX SPIKE/DUPLICATE RESULTS

Evaluate matrix spike recoveries and duplicate precision. Use the tables below to identify recoveries or RPDs outside windows. Criteria for recovery and precision are given in Table 1 at the end of the package. Use the sections below to identify outliers for organics and inorganics.

Inorganics: Sample Number: _____ Matrix: _____

Parameter	% Recovery	Action

IV. MATRIX SPIKE/DUPLICATE RESULTS (cont'd)

Parameter	% Recovery	Action

Replicate Analysis

Parameter	Result 1/ Recovery 1	Result 2/ Recovery 2	RPD	Action

Matrix Spike Action

Accept: 75-125% for (+), ND
>125% for ND

Approximate: <75% or >125% for (+) (Flag "J")
30-74% for ND (Flag "UJ")
All analytes associated with field blank used for matrix spike

Reject: <30% for ND (Flag "R")

NOTE: If the concentration in the original sample **exceeds** the concentration of the spike by a factor of four or more, **no action is taken for that analyte.**

IV. MATRIX SPIKE/DUPLICATE RESULTS (cont'd)

Duplicate Action

Accept: ≤20% (≤35% for soils) for (+), ND for samples ≥5x CRDL. ≤±CRDL (≤±2CRDL for soils) for samples less than 5x CRDL but greater than IDL.

Approximate: ≥20% (≥35% for soils) (Flag "J") for samples ≥5x CRDL. >±CRDL (>±2CRDL for soils) for samples less than 5x CRDL but greater than IDL.

Organics: Sample Number: _____ Matrix: _____

Parameter	Recovery 1	Recovery 2	RPD	Action

Matrix spike action

	Percent Recovery		
	<10%	10%-LCL	>UCL
Positive result	J	J	J
Non-detect result	R	UJ	A

LCL = Lower control limit
UCL = Upper control limit

In general, matrix spike actions should be applied when 50% or more of the matrix spike recoveries per fraction do not meet the required recovery windows. When the matrix spike recoveries for a matrix spike compound do not meet criteria in both MS and MSD samples, the results of the unspiked sample for that compound should be flagged "J/UJ."

IV. MATRIX SPIKE/DUPLICATE RESULTS (cont'd)

Duplicate Action:

The results for the designated sample for the entire fraction should be flagged "J" when 50% of the RPDs are greater than the established limits. Qualification based upon field duplicate precision is at the discretion of the reviewer and is based upon professional judgement.

NOTE: Qualification of results based upon field duplicates is at the discretion of the reviewer and is based upon professional judgement.

V. SURROGATE SPIKE RECOVERIES

Check a given fraction (i.e., semivolatiles, volatiles, or pesticides), and determine the number of surrogate compounds with unacceptable recoveries per the total number of surrogates in that fraction on a per sample basis.

Sample Number	Base/Neutral	Acid	VOA	Pesticide	Action

Recovery windows are presented in Table 2.

Surrogate actions

	Percent Recovery		
	<10%	10% to LCL	>UCL
Positive result	J	J	J
Non-detect result	R	UJ	A

V. SURROGATE SPIKE RECOVERIES (cont'd)

LCL = lower control limit
UCL = Upper control limit

Surrogate action shall be applied when one VOA or two Base Neutral or Acid Extract recoveries do not meet contractual requirements. Action for pesticides is at the discretion of the reviewer and is based upon professional judgement.

If surrogate recoveries are out of specification on initial analysis, but meet criteria on reanalysis, report results based on reanalysis, unless holding times do not meet criteria given in Section II.

VI. LABORATORY CONTROL SAMPLE

Evaluate the recovery of the laboratory control sample for inorganics using raw data and Form VII. Use the table below to identify inorganic recoveries outside the 80-120% window for aqueous matrices and specified limits for soil matrices. For organics, use matrix spike recovery windows given in Table 1 or use internal laboratory control limits when specified recovery windows do not exist.

Element/Compound	Recovery	Samples Affected	Action

TABLE 1

Spike Recovery and RPD Limits

Compound/Element	Matrix Spike Recovery Limits(%) Water	Matrix Spike Recovery Limits(%) Soil	RPD Limit(%) Water	RPD Limit(%) Soil
INORGANICS				
Metals	75-125	75-125	20	20
Wet Chemistry Analytes	75-125	75-125	20	20
VOLATILES				
1,1-Dichloroethene	61-145	59-172	14	22
Trichloroethene	71-120	62-137	14	24
Chlorobenzene	75-130	60-133	13	21
Toluene	76-125	59-139	13	21
Benzene	76-127	66-142	11	21
SEMIVOLATILES				
1,2,4-Trichlorobenzene	39-98	38-107	28	23
Acenaphthene	46-118	31-137	31	19
2,4-Dinitrotoluene	24-96	28-89	38	47
Pyrene	26-127	35-142	31	36
N-Nitroso-di-n-prop.	41-116	41-126	38	38
1,4-Dichlorobenzene	36-97	28-104	28	27
[illegible]tachlorophenol	9-103	17-109	50	47
[illegible]nol	12-89	26-90	42	35
2-Chlorophenol	27-123	25-102	40	50
4-Chloro-3-methylphenol	23-97	26-103	42	33
4-Nitrophenol	10-80	11-114	50	50
PESTICIDES				
Lindane	56-123	46-127	15	50
Heptachlor	40-131	35-130	20	31
Aldrin	40-120	34-132	22	43
Dieldrin	52-126	31-134	18	38
Endrin	56-121	42-139	21	45
4,4'-DDT	38-127	23-134	27	50

TABLE 2

Surrogate Spike Recovery Limits

Fraction	Compound	Recovery Limits(%) Water	Soil
Volatiles	Toluene-d_8	88-110	81-117
Volatiles	4-Bromofluorobenzene	86-115	74-121
Volatiles	1,2-Dichloroethane-d_4	76-114	70-121
Semivolatiles	Phenol	10-94	24-113
Semivolatiles	2-Fluorophenol	21-100	25-121
Semivolatiles	2,4,6-Tribromophenol	10-123	19-122
Semivolatiles	Nitrobenzene-d_5	35-114	23-120
Semivolatiles	2-Fluorobiphenyl	43-116	30-115
Semivolatiles	p-Terphenyl-d_{14}	33-141	18-137
Semivolatiles	2-Chlorophenol-d_4	33-110†	20-130†
Semivolatiles	1,2-Dichlorobenzene-d_4	16-110†	20-130†
Pesticide/PCB	Dibutylchlorendate	24-154	20-150
Pesticide/PCB	Decachlorobiphenyl	60-150†	60-150†
Pesticide/PCB	Tetrachlorometaxylene	60-150†	60-150†

† - Advisory limits only, reviewer discretion for qualification of outliers.

Data reviewed by : _____ Date: _____
Signature

DATA VALIDATION PACKAGE FOR VOLATILES AND SEMIVOLATILES UNDER 1990 SOW AND REVISION

WBS: _____ AREA: _____ DATA CODE: _____ REQUEST NO.: _____

D-_____ LABORATORY LOT #: _____

SAMPLING DATE: _____ RECEIPT DATE: _____ MATRIX: _____

The above data package has been reviewed and the quality assurance and performance data summarized based upon the National Functional Guidelines for Organic Data Review, dated June 1991. The general criteria used to determine the performance were based on an examination of:

- Chain-of-Custody
- Holding times
- Laboratory Precision Results
- Instrument Performance Checks
- Initial and Continuing Calibration results
- Field Duplicates
- Preservation
- Blank Analysis Results
- Matrix Spike Results
- Surrogate Spike Results
- Internal Standard Results
- Field, Rinse, and Trip Blanks

Overall comments regarding data: _____

_____

_____

_____

_____

_____

Definition of qualifiers used in the validation of this data set:

U Analyte was analyzed for but not detected
J Analyte was analyzed for and detected, but must be estimated due to quality control considerations
UJ Analyte was analyzed for but not detected, but must be estimated due to quality control considerations.
R Quality Control evaluation indicates that the data are unusable.
+ Detect
ND Non-detect
NJ Presumptive evidence of presence of material (tentative identification

I. CHAIN-OF-CUSTODY

Are chain-of-custody present for all samples associated with the reviewed package?: _____

If chain-of-custody is not present, list samples and parameters for which chain-of-custody is not present:

Sample Number	Parameters

Is chain-of-custody properly executed for all samples within the associated package?: _____

If chain-of-custody has been improperly executed, list all samples and parameters affected:

Sample Number	Parameters

II. PRESERVATION

Were aqueous samples for volatiles preserved with HCl?:

_____

If unpreserved, aromatic volatiles must be analyzed within 7 days and non-aromatics within 14 days. If preserved, all analytes must be determined within 14 days.

Are aqueous samples for semivolatiles preserved through refrigeration?: _____

NOTE: Preservation for nonaqueous samples is through refrigeration only.

III. HOLDING TIMES

Using Form 1 and raw data, check the associated samples for holding times.

Date of sampling: _____ Date Analyzed (VOA): _____

Date Extracted (SVOA): _____ Date Analyzed (SVOA): _____

Action: If samples are extracted for semivolatiles (7 day holding time) in excess of the holding times, approximate (UJ/J) results for those analyses. If the holding times are exceeded by a factor of 2 (14 day holding time) for extraction, reject (R) the results for the analyses exceeding holding times on Form 1. If samples are analyzed for semivolatiles (40 day holding time) in excess of the holding times, approximate (UJ/J) results for those analyses. If the holding times are exceeded by a factor of 2 (80 days) for analysis, reject (R) the results for the analyses exceeding holding times on Form 1. If volatiles are analyzed outside of the holding times given in Section II, approximate (UJ/J) results for that analysis. If the holding time given in Section II is exceeded by a factor of 2 reject (R) the results for that analysis.

Remarks: _____

_____

_____

V. INSTRUMENT PERFORMANCE CHECKS

The analysis of the instrument performance check solution must be performed at the beginning of each 12 hour period during which samples are analyzed. Check the ion abundance criteria for DFTPP and BFB on Form 5 and associated raw data against the specified criteria given in the following tables:

DFTPP Abundance Criteria

Mass	Ion Abundance Criteria
51	30.0-80.0% of mass 198
68	Less than 2.0% of mass 69
69	Present
70	Less than 2.0% of mass 69
127	25.0-75.0% of mass 198
197	Less than 1.0% of mass 198

IV. INSTRUMENT PERFORMANCE CHECKS (cont'd)

DFTPP Abundance Criteria (continuation)

Mass	Ion Abundance Criteria
198	Base peak, 100% relative abundance
199	5.0-9.0% of mass 198
275	10.0-30.0% of mass 198
365	Greater than 0.75% of mass 198
441	Present but less than mass 443
442	40.0-110.0% of mass 198
443	15.0-24.0% of mass 442

BFB Abundance Criteria

Mass	Ion Abundance Criteria
50	8.0-40.0% of mass 95
75	30.0-66.0% of mass 95
95	base peak, 100% relative abundance
96	5.0-9.0% of mass 95
173	less than 2.0% of mass 174
174	50.0-120.0% of mass 95
175	4.0-9.0% of mass 174
176	93.0-101.0% of mass 174
177	5.0-9.0% of mass 176

_____ The DFTPP performance results were reviewed and found to be within specified criteria.

_____ The BFB performance results were reviewed and found to be within specified criteria.

The DFTPP/BFB performance results were reviewed and the following abundances were found to fall outside specified criteria:

Compound	m/z	Required Abundance	Actual Abundance	Action

IV. INSTRUMENT PERFORMANCE CHECKS (cont'd)

Action: If calibration is in error, reject (R) all data as unusable unless either professional judgement indicates otherwise or the data is needed on a priority basis. In this is the case, clearly note those abundances outside requirements in the general comments section on page 1 of this package and discuss the effects of the abundance anomalies.

V. INITIAL AND DAILY CALIBRATION

A. Volatile Calibration Verification

Date of Initial Calibration: _____

Calibration Date	QC Criteria Out RF	%RSD	%D	Compounds	Samples Affected and Action

Action:

Calibration	Accept (+, ND)	Approximate (J/UJ)	Reject (R)
Initial	RF>0.05[1] RSD<30%	RSD>30%(+, ND)[2] RF<0.05(+)	RF<0.05 (ND)

Date(s) of Daily Calibration: _____

V. INITIAL AND DAILY CALIBRATION (cont'd)

Calibration Date	QC Criteria Out RF	%RSD	%D	Compounds	Samples Affected and Action

Calibration	Accept (+, ND)	Approximate (J/UJ)	Reject (R)
Daily	RF>0.05 %D<25%	%D>25% (+, ND)[3,4] RF<0.05 (+)	RF<0.05) (ND)

NOTES:

1 - Contractually, the minimum RF for the starred (*'d) compounds must be checked and verified by a review of Forms 6 and 7.
2 - Contractually, a maximum RSD for all starred (*'d) compounds on Form 6 is 20.5%. Check Form 6 for verification.
3 - Contractually, a maximum %D for all starred (*'d) compounds on Form 6 is 25%. Check Form 7 for verification.
4 - Technical judgement required for non-detects. A negative %D indicates that the instrument has greater sensitivity than it had during the initial calibration; conversely, a positive %D indicates that the instrument is less sensitive.
+ - Detects
ND - Non-detects
RF - Response factor
RSD - Relative standard deviation
%D - Percent difference

V. INITIAL AND DAILY CALIBRATION (cont'd)

Actions should be applied to all results in the volatile fraction when contractual and established regulatory criteria are not met for the initial calibration. When daily calibration criteria are not met, actions only apply to samples associated with that particular daily standard.

B. Semivolatile Calibration Verification

Date of Initial Calibration: _____

Calibration Date	QC Criteria Out RF	%RSD	%D	Compounds	Samples Affected and Action

Action:

Calibration	Accept (+, ND)	Approximate (J/UJ)	Reject (R)
Initial	RF>0.05[1] RSD<30%	RSD>30%(+, ND)[2] RF<0.05 (+)	RF<0.05(ND)

V. INITIAL AND DAILY CALIBRATION (cont'd)

B. Semivolatile Calibration Verification (cont'd)

Date(s) of Daily Calibration: _____

Calibration Date	QC Criteria Out RF	%RSD	%D	Compounds	Samples Affected and Action

Action:

Calibration	Accept (+, ND)	Approximate (J/UJ)	Reject (R)
Daily	RF>0.05 %D<25%	%D>25% (+, ND)[3,4] RF<0.05 (+)	RF<0.05 (ND)

V. INITIAL AND DAILY CALIBRATION (cont'd)

NOTES:

- * - Contractually, the minimum RF for the starred (*'d) compounds must be checked and verified by a review of Forms 6 and 7.
- 2 - Contractually, a maximum RSD for all starred (*'d) compounds on Form 6 is 20.5%. Check Form 6 for verification.
- 3 - Contractually, a maximum %D for all starred (*'d) compounds on Form 6 is 25%. Check Form 7 for verification.
- 4 - Technical judgement required for non-detects. A negative %D indicates that the instrument has greater sensitivity than it had during the initial calibration; conversely, a positive %D indicates that the instrument is less sensitive.
- \+ - Detects
- ND - Non-detects
- RF - Response factor
- RSD - Relative standard deviation
- %D - Percent difference

Actions should be applied to <u>all</u> results in the base neutral or acid extract fraction when contractual and established regulatory criteria are not met for the initial calibration. When daily calibration criteria are not met, actions only apply to samples associated with that particular daily standard.

VI. PREPARATION BLANK ANALYSIS

Preparation blank form I and raw data were reviewed and the following contaminants were present in the blank:

<u>Base Neutral/Acid Extract</u>:

Blank ID	Associated Samples and Action	Compound	Conc'n (µg/L or kg)	CRQL

VI. PREPARATION BLANK ANALYSIS (cont'd)

Blank ID	Associated Samples and Action	Compound	Conc'n (µg/L or kg)	CRQL

Volatiles:

Blank ID	Associated Samples and Action	Compound	Conc'n (µg/L or kg)	CRQL

Blank Action:

Sample results shall be qualified "U" in accordance with the following guidelines:

Common contaminants: Sample concentration ≤10x concentration of analyte in the blank.

Other contaminants: Sample concentration ≤5x concentration of analyte in the blank.

VI. PREPARATION BLANK ANALYSIS (cont'd)

Rules for flags:

1. Sample result is greater than the CRQL but less than the required 5 or 10x amount of contaminant in the blank:

	5x	10x
Blank Result	7	7
CRQL	5	5
Sample Result	30	60
Qualified Sample Result	30U	60U

2. Sample result is less than CRQL and is also less than the required 5 or 10x amount of contaminant in the blank:

	5x	10x
Blank Result	6	6
CRQL	5	5
Sample Result	4J	4J
Qualified Sample Result	5U	5U

3. Sample result is greater than the required 5 or 10x amount of contaminant in the blank:

	5x	10x
Blank Result	10	10
CRQL	5	5
Sample Result	60	120
Qualified Sample Result	60	120

VII. SURROGATE SPIKE (SYSTEM MONITORING COMPOUND) RECOVERIES

Using Form 2 and associated raw data, check a given fraction (i.e., base-neutral, acid, or volatiles), and determine the number of surrogate compounds with unacceptable recoveries per the total number of surrogates in that fraction on a per sample basis. The Tables below summarize the required recovery windows for surrogates. Use the table on page 12 to document outliers.

VII. SURROGATE SPIKE (SYSTEM MONITORING COMPOUND) RECOVERIES (cont'd)

Base Neutral/Acid Extract Surrogate Recovery Windows

Compound	Recovery Limits (%) Water	Soil
Nitrobenzene-d_5	35-114	23-120
2-Fluorobiphenyl	43-116	30-115
p-Terphenyl-d_{14}	33-141	18-137
Phenol-d_5	10-110	24-113
2-Fluorophenol	21-110	25-121
2,4,6-Tribromophenol	10-123	19-122
2-Chlorophenol-d_4	33-110†	20-130†
1,2-Dichlorobenzene-d_4	16-110†	20-130†

† - Advisory limits: No action taken for outliers.

Volatile Surrogate Recovery Windows

Compound	Recovery Limits (%) Water	Soil
Toluene-d_8	88-110	84-138
Bromofluorobenzene	86-115	59-113
1,2-Dichloroethane-d_4	76-114	70-121

Sample Number	Base/Neutral	Acid	VOA	Action

VII. SURROGATE SPIKE (SYSTEM MONITORING COMPOUND) RECOVERIES (cont'd)

Surrogate actions:

	Percent Recovery		
	<10%	10% to LCL	>UCL
Positive result	J	J	J
Non-detect result	R	UJ	A

LCL = lower control limit
UCL = Upper control limit

Surrogate action shall be applied when one VOA or two Base Neutral or Acid Extract recoveries do not meet contractual requirements.

If surrogate recoveries are out of specification on initial analysis, but meet criteria on reanalysis, report results based on reanalysis, unless holding times do not meet criteria given in Section III.

VIII. MATRIX SPIKE RECOVERY

Using Form 3 and associated raw data, check a given fraction (i.e., semivolatiles, volatiles, or pesticides) and identify those matrix spike compounds with unacceptable recoveries using the table on page 7. The Tables below summarize the required recovery windows for matrix spikes.

Base Neutral/Acid Extract Surrogate Recovery Windows

Compound	Recovery Limits (%) Water	Soil
Phenol	12-110	26-90
2-Chlorophenol	27-123	25-102
1,4-Dichlorobenzene	36-97	28-104
N-Nitroso-di-n-prop.	41-116	41-126
1,2,4-Trichlorobenzene	39-98	38-107
4-Chloro-3-methylphenol	23-97	26-103
Acenaphthene	46-118	31-137
4-Nitrophenol	10-80	11-114
2,4-Dinitrotoluene	24-96	28-89
Pentachlorophenol	9-103	17-109
Pyrene	26-127	35-142

VIII. MATRIX SPIKE RECOVERY (cont'd)

Volatile Matrix Spike Recovery Windows

Compound	Recovery Limits (%) Water	Soil
1,1-Dichloroethene	61-145	59-172
Trichloroethene	71-120	62-137
Benzene	76-127	66-142
Toluene	76-125	59-139
Chlorobenzene	75-130	60-133

Sample Number(s): _____

Parameter	Recovery 1	Recovery 2	RPD	Action

Matrix spike action:

	Percent Recovery <10%	10% to LCL	>UCL
Positive result	J	J	J
Non-detect result	R	UJ	A

VIII. MATRIX SPIKE RECOVERY (cont'd)

LCL = Lower control limit
UCL = Upper control limit

In general, matrix spike actions should be applied when 50% or more of the matrix spike recoveries per fraction do not meet the required recovery windows. When the matrix spike recoveries for a matrix spike compound do not meet criteria in both MS and MSD samples, the results of the unspiked sample for that compound should be flagged "J" if professional judgement indicates such action is warranted.

Matrix spike recoveries not within contractual limits shall be applied only to the sample on which the spike was performed, unless technical judgement indicates the need to apply criteria to all samples.

IX. MATRIX SPIKE DUPLICATE RECOVERY

Using Form 3 and associated raw data, check a given fraction (i.e., semivolatiles, volatiles, or pesticides) and identify those matrix spike compounds with unacceptable RPDs using the table on page 7. The Tables below summarize the required RPD windows for matrix spike duplicates.

Base Neutral/Acid Extract RPD Windows

Compound	RPD Limits Water	RPD Limits Soil
Phenol	42	35
2-Chlorophenol	40	50
1,4-Dichlorobenzene	28	27
N-Nitroso-di-n-prop.	38	38
1,2,4-Trichlorobenzene	28	23
4-Chloro-3-methylphenol	42	33
Acenaphthene	31	19
4-Nitrophenol	50	50
2,4-Dinitrotoluene	38	47
Pentachlorophenol	50	47
Pyrene	31	36

IX. MATRIX SPIKE DUPLICATE RECOVERY (cont'd)

Volatile RPD Windows

Compound	RPD Limits (%) Water	Soil
1,1-Dichloroethene	14	22
Trichloroethene	14	24
Benzene	11	21
Toluene	13	21
Chlorobenzene	13	21

Matrix spike duplicate action:

The results for the designated sample for the entire fraction should be flagged "J/UJ" when 50% of the RPDs are greater than the established limits, if professional judgement indicates such action is warranted.

X. INTERNAL STANDARD AREA SUMMARY

Review Form 8A, 8B, 8C, and associated raw data for internal standard areas. List in the table below, any area outliers.

Sample Number	Internal Standard	Date Analyzed	Fraction	Action

X. INTERNAL STANDARD AREA SUMMARY (cont'd)

Action: If an internal standard area is outside the -50 to +100% of the associated standard:

1) Flag all positive results for compounds quantitated against that internal standard "J."

2) Accept all non-detects quantitated against an internal standard count greater than 100%.

2) Flag all non-detects for compounds quantitated against an internal standard count less than 50% "UJ."

3) Extremely low internal standard area counts shall have associated data flagged "R."

Check for retention time shifts of internal standards. If large shifts are noted the reviewer may consider total or partial rejection of associated data. Note any anomalies in the general comments section on page 1.

Data Package reviewed by: _____ Date: _____
Signature

DATA VALIDATION PACKAGE FOR INORGANICS

C _____ AREA: _____ DATA CODE: _____ REQUEST NO.: _____

D-_____ LABORATORY LOT #: _____

SAMPLING DATE: _____ RECEIPT DATE: _____ MATRIX: _____

The above data package has been reviewed and the quality assurance and performance data summarized based upon the Functional Guidelines for Evaluating Inorganic Analyses, Dated July 1, 1988. The general criteria used to determine the performance were based on an examination of:

- Chain-of-Custody
- Holding Times
- Laboratory Control Samples
- Detection Limit Results
- Standard Addition Results
- Serial Dilution Results
- Field/Rinse Blanks, as applicable
- Preservation
- Calibration Verification
- Preparation Blanks
- Interference QC Results
- Matrix Spike %R Results
- Laboratory Precision Results
- Field Duplicates, as applicable

Overall comments regarding data: _____

_____

_____

_____

_____

_____

_____

_____

Definition of symbols used in the validation of this data set:

A	Acceptable results
U	Analyte was analyzed for but not detected
J	Analyte was analyzed for and detected, but must be estimated due to quality control considerations.
UJ	Analyte was analyzed for but not detected, but must be estimated due to quality control considerations.
R	Quality Control evaluation indicates that the data are unusable.
+	Detect
ND	Non-detect

I. CHAIN-OF-CUSTODY

Are chains-of-custody present for all samples in the associated package?: _____

If chain-of-custody is not present, list samples and parameters for which chain-of-custody is not present:

Sample Number	Parameters

Is chain-of-custody properly executed for all samples within the associated package?: _____

If chain-of-custody has been improperly executed, list all samples and parameters affected:

Sample Number	Parameters

II. PRESERVATION

Were aqueous samples for metals preserved with HNO_3?: _____

Are aqueous samples for cyanide preserved with NaOH?: _____

Preservation for nonaqueous samples for all parameters is through refrigeration only.

III. HOLDING TIMES

Date of sampling: _____ Date Analyzed (Hg): _____

Date Analyzed (CN): _____ Date Analyzed (Others): _____

Action: If samples are analyzed for mercury (28 days), cyanide (14 days) or any other element (180 days) in excess of the holding times, approximate (J/UJ) results for that element on Form I. If the holding times are exceeded by a factor of 2 (56, 28, or 360 days for the respective analytes), reject (R) the results for the analyte(s) exceeding holding times on associated Forms I.

Remarks: _____

_____

IV. INITIAL AND CONTINUING CALIBRATION VERIFICATION

Evaluate raw data and Form II to determine that calibration verification standards were analyzed every ten samples and that the recovery was within 10% for ICP, AA, and GFAA; within 20% for mercury; and within 15% for cyanide analysis. Use the table on the next page to identify parameters and samples not meeting criteria. Verify that the correlation coefficient for calibration curves is ≥0.995.

Action windows:

<u>Mercury</u>

Accept:	80-120% for (+) and ND >121% for ND Correlation coefficient ≥0.995
Approximate:	65-79% and 121-135% for (+) (Flag "J") 65-79% for ND (Flag "UJ") Correlation coefficient <0.995 (Flag "J/UJ")
Reject:	<65% for (+), ND (Flag "R") >135% for (+) (Flag "R")

<u>Cyanide</u>

Accept:	85-115% for (+) and ND >116% for ND Correlation coefficient ≥0.995

IV. INITIAL AND CONTINUING CALIBRATION VERIFICATION (cont'd)

Cyanide

Approximate: 70-84% and 116-130% for (+) (Flag "J")
70-84% for ND (Flag "UJ")
Correlation coefficient <0.995 (Flag "J/UJ")

Reject: <70% for (+), ND (Flag "R")
>130% for (+) (Flag "R")

Metals

Accept: 90-110 for (+) and ND
>111% for ND
Correlation coefficient ≥0.995

Approximate: 75-89% and 111-125% for (+) (Flag "J")
75-89% for ND (Flag "UJ")
Correlation coefficient <0.995 (Flag "J/UJ")

Reject: <75% for (+), ND (Flag "R")
>125% for (+) (Flag "R")

NOTE: Any CRDL recoveries greater than 120 or less than 80% in the remarks section, below.

Flag results on associated Forms I according to analyte and sample number.

Parameter	Run Date	Criteria	Samples Affected	Action

Remarks: _____

V. BLANK ANALYSIS RESULTS

Review both blank summary forms and raw data for all blanks and verify that the results were accurately reported.

Action:

Accept: All blanks (field, rinse, prep, initial, and continuing) with analyte concentrations < IDL.

Approximate: Flag all sample results >IDL but <5 times the amount in any laboratory blank (prep, initial, and continuing) as "U."

Reject: Samples associated with blank having gross contamination should be rejected (R) for all associated analytes.

NOTE: Action levels are determined by multiplying the highest concentration determined in any preparation, initial, or continuing blank by a factor of five. All data associated with the applicable blank is then evaluated against the blanks as above. Qualification based on field or rinse blanks is at the discretion of the reviewer and is based on professional judgement. Use extra pages, if necessary.

Parameter	Run Date	Type of Blank	Conc'n	Conc (5x)	Samples Affected	Action

Flag results on associated Forms I according to analyte and sample number.

VI. ICP INTERFERENCE CHECK SAMPLE

Verify that the ICS was run before sample analysis was begun and at the end of a sample run (or minimum of twice per eight hour working shift.

If the ICS was not run, flag all associated results "J/UJ" on associated Forms 1.

If the ICS was run, verify that the recovery was within the ±20% window. Note any outliers on the table below. Those analytes outside the 20% criterion shall be evaluated on the table below in accordance with the following guidelines:

Action

Accept: >120% for ND.

Approximate: >120% for (+) (Flag "J")
50-79% for (+) (Flag "J")
50-79% for ND (Flag "UJ")

Reject: <50% for (+), ND (Flag "R")

Parameter	Run Date	Recovery	Samples Affected	Action

Flag results on Form I according to analyte and sample number.

Remarks: _____

VII. MATRIX SPIKE RESULTS

Evaluate the matrix spike recovery for the 75-125% recovery window, using raw data and Form VA. Use the table below to identify recoveries outside the window.

Sample Number: _____

Element	Sample Result	Spike Result	Spike Added	Percent Recovery	Action

Calculate % Recovery using the following equation:

$$\%R = \frac{(SSR - SR)}{SA} \times 100$$

where:
SSR = Spiked sample result
SR = Sample result
SA = Spike added

VII. MATRIX SPIKE RESULTS (cont'd)

Action:

Accept: 75-125% for (+), ND
>125% for ND

Approximate: <75% or >125% for (+) (Flag "J")
30-74% for ND (Flag "UJ")
All analytes associated with field blank used for matrix spike (Flag "J/UJ")

Reject: <30% for ND (Flag "R")

NOTE: If the concentration in the original sample **exceeds** the concentration of the spike by a factor of four or more, **no action is taken for that analyte.**

VIII. LABORATORY PRECISION EVALUATION

Evaluate the precision data (including field duplicates, if present) using raw data and Form VI, for the 20% (35% for soil) window for samples with concentrations greater than or equal to 5x CRDL. For samples less than 5x CRDL, use the absolute value of the CRDL (2x CRDL for soils) as the control limit for the difference between the duplicate samples. Use the table below to identify recoveries outside these windows. Note: Flagging of sample data due to field duplicate precision is at the discretion of the reviewer and is based upon professional judgement.

Sample Number: _____ Matrix: _____

Element	CRDL	Sample Result	Duplicate Result	RPD	Action

VIII. LABORATORY PRECISION EVALUATION (cont'd)

Calculate precision (RPD) using the following equation:

$$RPD = \frac{|S - D|}{(S + D)} \times 200$$

where: S = First sample value (original)
D = Second sample value (duplicate)

Action:

Accept: ≤20% (≤35% for soils) for (+), ND for samples ≥5x CRDL.
≤±CRDL (≤±2CRDL for soils) for samples less than 5x CRDL but greater than IDL.

Approximate: ≥20% (≥35% for soils) (Flag "J") for samples ≥5x CRDL.
>±CRDL (>±2CRDL for soils) for samples less than 5x CRDL but greater than IDL.

IX. LABORATORY CONTROL SAMPLE

Evaluate the recovery of the laboratory control sample using raw data and Form VII. Use the table below to identify recoveries outside the 80-120% window for aqueous matrices and outside specified windows for soil matrices.

Element	Known Value	Found Value	Recovery	Samples Affected	Action

IX. LABORATORY CONTROL SAMPLE (cont'd)

Determine recovery using the following equation:

$$\%Recovery = \frac{Found\ Value}{Known\ Value} \times 100$$

Action:

Accept: 80-120 for (+), ND
>120% for ND

Approximate: 50-79% and >120% for (+) (Flag "J")
50-79% for ND (Flag "UJ")

Reject: <50% for (+), ND (Flag "R")

Remarks: _____

_____

_____

X. FURNACE ATOMIC ABSORPTION QC

Review raw data for duplicate injections for all samples, analytical spike samples, blanks, blank spikes, and standards. Review data to ensure that all samples and the preparation blank are spiked in duplicate at the instrument (post-digestion or analytical spike). Review data for 20% RSD for duplicate injection precision. Review for post digestion recovery for ±15% window. Use the table below to indicate those analytes which were outside protocol using the number scheme given under Action. It should be noted that an analyte may be approximated ("J/UJ") for more than one criterion and may have several.

Element	Sample Number	Evaluation Criteria	Action

X. FURNACE ATOMIC ABSORPTION QC (cont'd)

Element	Sample Number	Evaluation Criteria	Action

Action:

Accept: Injection Precision ≤20% RSD for (+), ND

Injection Precision >20% for samples < CRDL

Post-digestion recovery 85-115 for (+), ND

Approximate:

1. Injection Precision ≥20% for (+), ND (Flag "J")
2. Post digestion recovery <40% for (+) (Flag "J")
3. Post digestion recovery ≥10% but <40% for ND (Flag "UJ")
4. Post digestion spike <85 or >115% and sample absorbance <50% of spike absorbance for (+) (Flag "J")
5. Post digestion spike <85 or >115% and sample absorbance <50% of spike absorbance for ND (Flag "UJ")

X. FURNACE ATOMIC ABSORPTION QC (cont'd)

6. If MSA required but not performed for (+) (Flag "J")

7. If MSA performed at wrong concentrations (Flag "J")

8. If coefficient of correlation <0.995 for MSA (Flag "J")

Reject:

9. Post digestion recovery <10% for ND (Flag "R")

NOTE: See also the Furnace Flow Diagram given on pp E-24 of the SOW 3/90.

XI. ICP SERIAL DILUTION RESULTS

Evaluate the results of the ICP Serial Dilution sample for ±10% Difference criteria. Indicate on the table below, those differences which are outside the window.

Element	IDL	IDL x 50	Sample	Dilution	%D	Action

x XI. ICP SERIAL DILUTION RESULTS (cont'd)

Element	IDL	IDL x 50	Sample	Dilution	%D	Action

$$\%D = \frac{|I - S|}{I} \times 100$$

where: I = Initial sample result
S = Dilution result (Instrument reading x 5)

Action:

Accept: %D <10% for all sample concentrations
%D >10% for sample concentrations <50x IDL

Approximate: %D >10% and sample concentrations ≥50x IDL (Flag "J")

Data Package reviewed by: _____ Date: _____
Signature

DATA VALIDATION PACKAGE FOR ORGANICS

[illegible]: _____ AREA: _____ DATA CODE: _____ REQUEST NO.: _____

D-_____ LABORATORY LOT #: _____

SAMPLING DATE: _____ RECEIPT DATE: _____ MATRIX: _____

The above data package has been reviewed and the quality assurance and performance data summarized based upon the Functional Guidelines for Evaluating Organic Analyses, dated February 1, 1988. The general criteria used to determine the performance were based on an examination of:

- Chain-of-Custody
- Holding times
- Laboratory Precision Results
- DFTPP and BFB Tune Results
- Initial and Continuing Calibration results
- Field Duplicates
- Preservation
- Blank Analysis Results
- Matrix Spike Results
- Surrogate Spike Results
- Internal Standard Results
- Trip, Field, and Rinse Blanks

Overall comments regarding data: _____

_____

_____

_____

_____

_____

_____

_____

Definition of symbols used in the validation of this data set:

A	Acceptable results
U	Analyte was analyzed for but not detected
UJ	Analyte was analyzed for but not detected, but must be estimated due to quality control considerations.
R	Quality Control evaluation indicates that the data are unusable.
+	Detect
ND	Non-detect
NJ	Presumptive evidence of presence of material (tentative identification)

I. CHAIN-OF-CUSTODY

Are chains-of-custody present for all samples associated with the reviewed package?: _____

If chain-of-custody is not present, list samples and parameters for which chain-of-custody is not present:

Sample Number	Parameters

Is chain-of-custody properly executed for all samples within the associated package?: _____

If chain-of-custody has been improperly executed, list all samples and parameters affected:

Sample Number	Parameters

II. PRESERVATION

Were aqueous samples for volatiles preserved with HCl?:

_____

If unpreserved, aromatic volatiles must be analyzed within 7 days and non-aromatics within 14 days. If preserved, all analytes must be determined within 14 days.

Are aqueous samples for semivolatiles preserved through refrigeration?: _____

Preservation for nonaqueous samples is through refrigeration only.

III. HOLDING TIMES

Using Form 1, check the associated samples for holding times.

Date of sampling: _____ Date Analyzed (VOA): _____

Date Extracted (SVOA): _____ Date Analyzed (SVOA): _____

Date Extracted (Pest): _____ Date Analyzed (Pest): _____

Action: If samples are extracted for semivolatiles and pesticides (7 day holding time) in excess of the holding times, approximate (J) results for those analyses. If the holding times are exceeded by a factor of 2 (14 day holding time) for extraction, reject (R) the results for the analyses exceeding holding times on Form 1. If samples are analyzed for semivolatiles and pesticides (40 day holding time) in excess of the holding times, approximate (J) results for those analyses. If the holding times are exceeded by a factor of 2 (80 days) for analysis, reject (R) the results for the analyses exceeding holding times on Form 1. If volatiles (14 day holding time) are analyzed outside of holding times, approximate (J) results for that analysis. If the holding time is exceeded by a factor of 2 (28 days) reject (R) the results for that analysis.

Remarks: _____

_____

_____

IV. DFTPP AND BFB PERFORMANCE TUNE RESULTS

Check the ion abundance criteria for DFTPP and BFB on Form 5 against the specified criteria given in the following tables:

DFTPP Abundance Criteria

Mass	Ion Abundance Criteria
51	30.0-60.0 percent of mass 198
68	Less than 2.0 percent of mass 69
69	Present
70	Less than 2.0 percent of mass 69
127	40.0-60.0 percent of mass 198
197	Less than 1.0 percent of mass 198
198	Base peak, 100% relative abundance

IV. DFTPP AND BFB PERFORMANCE TUNE RESULTS (cont'd)

DFTPP Abundance Criteria (continuation)

Mass	Ion Abundance Criteria
199	5.0-9.0 percent of mass 198
275	10.0-30.0 percent of mass 198
365	Greater than 1.0% of mass 198
441	Present but less than mass 443
442	>40.0 percent of mass 198
443	17.0-23.0 percent of mass 442

BFB Abundance Criteria

Mass	Ion Abundance Criteria
50	15.0-40.0 percent of mass 95
75	30.0-60.0 percent of mass 95
95	base peak, 100% relative abundance
96	5.0-9.0 percent of mass 95
173	less than 2.0 percent of mass 174
174	>50.0 percent of mass 95
175	5.0-9.0 percent of mass 174
176	95.0-101.0 percent of mass 174
177	5.0-9.0 percent of mass 176

_____ The DFTPP performance results were reviewed and found to be within specified criteria.

_____ The BFB performance results were reviewed and found to be within specified criteria.

The DFTPP/BFB performance results were reviewed and the following abundances were found to fall outside specified criteria:

Compound	m/z	Required Abundance	Actual Abundance	Action

IV. DFTPP AND BFB PERFORMANCE TUNE RESULTS (cont'd)

Action: If calibration is in error, reject all data as unusable unless the data is needed on a priority basis. If this is the case, then the tuning criteria may be expanded by 25% of the low and high limit. If the criteria are still not met, then all data are unusable (R). See Functional Guidelines for Evaluating Organic Analyses (February 1, 1988), pages 7-9 for more information.

V. SURROGATE SPIKE RECOVERIES

Using Form 2 check a given fraction (i.e., semivolatiles, volatiles, or pesticides), and determine the number of surrogate compounds with unacceptable recoveries per the total number of surrogates in that fraction on a per sample basis. The Tables below summarize the required recovery windows for surrogates.

Base Neutral/Acid Extract Surrogate Recovery Windows

Compound	Recovery Limits (%) Water	Soil
Nitrobenzene-d_5	35-114	23-120
2-Fluorobiphenyl	43-116	30-115
p-Terphenyl-d_{14}	33-141	18-137
Phenol-d_5	10-110	24-113
2-Fluorophenol	21-110	25-121
2,4,6-Tribromophenol	10-123	19-122

Volatile Surrogate Recovery Windows

Compound	Recovery Limits (%) Water	Soil
Toluene-d_8	88-110	84-138
Bromofluorobenzene	86-115	59-113
1,2-Dichloroethane-d_4	76-114	70-121

V. SURROGATE SPIKE RECOVERIES (continuation)

Pesticides/PCBs Surrogate Recovery Windows

Compound	Recovery Limits (%) Water	Soil
Dibutylchlorendate	20-154	24-150

Sample Number	Base/Neutral	Acid	VOA	Pesticide	Action

Surrogate actions:

	Percent Recovery		
	<10%	10% to LCL	>UCL
Positive result	J	J	J
Non-detect result	R	UJ	A

LCL = lower control limit
UCL = Upper control limit

Surrogate action shall be applied when one VOA or two Base Neutral or Acid Extract recoveries do not meet contractual requirements.

If surrogate recoveries are out of specification on initial analysis, but meet criteria on reanalysis, report results based on reanalysis, unless holding times do not meet criteria given in Section III.

VI. MATRIX SPIKE RECOVERY

Using Form 3 check a given fraction (i.e., semivolatiles, volatiles, or pesticides) and identify those matrix spike compounds with unacceptable recoveries using the table on the following page. The Tables below summarize the required recovery windows for matrix spikes.

Base Neutral/Acid Extract Matrix Spike Recovery Windows

Compound	Recovery Limits (%) Water	Soil
Phenol	12-110	26-90
2-Chlorophenol	27-123	25-102
1,4-Dichlorobenzene	36-97	28-104
N-Nitroso-di-n-prop.	41-116	41-126
1,2,4-Trichlorobenzene	39-98	38-107
4-Chloro-3-methylphenol	23-97	26-103
Acenaphthene	46-118	31-137
4-Nitrophenol	10-80	11-114
2,4-Dinitrotoluene	24-96	28-89
Pentachlorophenol	9-103	17-109
Pyrene	26-127	35-142

Volatile Matrix Spike Recovery Windows

Compound	Recovery Limits (%) Water	Soil
1,1-Dichloroethene	61-145	59-172
Trichloroethene	71-120	62-137
Benzene	76-127	66-142
Toluene	76-125	59-139
Chlorobenzene	75-130	60-133

Pesticides/PCBs Matrix Spike Recovery Windows

Compound	Recovery Limits (%) Water	Soil
γ-BHC (Lindane)	56-123	46-127
Heptachlor	40-131	35-130
Aldrin	40-120	34-132
Dieldrin	52-126	31-134
Endrin	56-121	42-139
4,4'-DDT	38-127	23-134

VI. MATRIX SPIKE RECOVERY (cont'd)

Sample Number: _____

Parameter	Recovery 1	Recovery 2	RPD	Action

Matrix spike action:

	Percent Recovery		
	<10%	10% to LCL	>UCL
Positive result	J	J	J
Non-detect result	R	UJ	A

LCL = Lower control limit
UCL = Upper control limit

In general, matrix spike actions should be applied when 50% or more of the matrix spike recoveries per fraction do not meet the required recovery windows. When the matrix spike recoveries for a matrix spike compound do not meet criteria in both MS and MSD samples, the results of the unspiked sample for that compound should be flagged "J/UJ" or "R" depending on recovery.

VI. MATRIX SPIKE RECOVERY (cont'd)

Matrix spike recoveries not within contractual limits shall be applied only to the sample on which the spike was performed, unless technical judgement indicates the need to apply criteria to all samples.

VII. MATRIX SPIKE DUPLICATE ANALYSIS

Using Form 3 check a given fraction (i.e., semivolatiles, volatiles, or pesticides) and identify those matrix spike compounds with unacceptable RPDs using the table on the previous page. The Tables below summarize the required RPD windows for matrix spike duplicates.

Base Neutral/Acid Extract RPD Windows

Compound	RPD Limits (%) Water	Soil
Phenol	42	35
2-Chlorophenol	40	50
1,4-Dichlorobenzene	28	27
N-Nitroso-di-n-prop.	38	38
1,2,4-Trichlorobenzene	28	23
4-Chloro-3-methylphenol	42	33
Acenaphthene	31	19
4-Nitrophenol	50	50
2,4-Dinitrotoluene	38	47
Pentachlorophenol	50	47
Pyrene	31	36

VII. MATRIX SPIKE DUPLICATE ANALYSIS (cont'd)

Volatile RPD Windows

Compound	RPD Limits (%) Water	Soil
1,1-Dichloroethene	14	22
Trichloroethene	14	24
Benzene	11	21
Toluene	13	21
Chlorobenzene	13	21

Pesticides/PCBs RPD Windows

Compound	RPD Limits (%) Water	Soil
γ-BHC (Lindane)	15	50
Heptachlor	20	31
Aldrin	22	43
Dieldrin	18	38
Endrin	21	45
4,4'-DDT	27	50

Matrix spike duplicate action:

The results for the designated sample for the entire fraction should be flagged "J/UJ" when 50% of the RPDs are greater than the established limits. Qualification based upon field duplicate precision is at the discretion of the reviewer and is based upon professional judgement.

VIII. BLANK ANALYSIS

Review blank summary forms and raw data for all blanks (trip, field, rinse, and laboratory) and verify that results were accurately reported. Note any outliers on the tables below.

NOTE: The application of flags shall be performed for internal laboratory blanks. Field, rinse, and trip blank qualifications are at the discretion of the reviewer and are based on professional judgement.

VIII. BLANK ANALYSIS (cont'd)

Base Neutral/Acid Extract:

Blank ID	Associated Samples and Action	Compound	Conc'n (µg/L or kg)	CRQL

Volatiles:

Blank ID	Associated Samples and Action	Compound	Conc'n (µg/L or kg)	CRQL

Pesticides/PCBs:

Blank ID	Associated Samples and Action	Compound	Conc'n (µg/L or kg)	CRQL

Blank Action:

Sample results shall be qualified "U" in accordance with the following guidelines for laboratory contaminants:

Common contaminants: Sample concentration ≤10x concentration of analyte in the blank.

VIII. BLANK ANALYSIS (cont'd)

Other contaminants: Sample concentration ≤5x concentration of analyte in the blank.

Rules for flags:

1. Sample result is greater than the CRQL but less than the required 5 or 10x amount of contaminant in the blank:

	5x	10x
Blank Result	7	7
CRQL	5	5
Sample Result	30	60
Qualified Sample Result	30U	60U

2. Sample result is less than CRQL and is also less than the required 5 or 10x amount of contaminant in the blank:

	5x	10x
Blank Result	6	6
CRQL	5	5
Sample Result	4J	4J
Qualified Sample Result	5U	5U

3. Sample result is greater than the required 5 or 10x amount of contaminant in the blank:

	5x	10x
Blank Result	10	10
CRQL	5	5
Sample Result	60	120
Qualified Sample Result	60	120

IX. INITIAL AND DAILY CALIBRATION

A. Volatile Calibration Verification

Date of Initial Calibration: _____

Date(s) of Daily Calibration: _____

Calibration Date	QC Criteria Out RF	%RSD	%D	Compounds	Samples Affected and Action

Action:

Calibration	Accept (+, ND)	Approximate (J/UJ)	Reject (R)
Initial	RF>0.300 (SPCC) RF>0.05[1] RSD<30%	RSD>30% (+, ND) RF<0.300 (SPCC) (+) RF<0.05[1] (+)	RF<0.300 (SPCC) (ND) RF<0.05[1] (ND)
Daily	RF>0.300 (SPCC) RF>0.05[1] %D<25%	%D>25% (+, ND)* RF<0.300 (SPCC) (+) RF<0.05[1] (+)	RF<0.300 (SPCC) (ND) RF<0.05 (ND)

NOTES:

* - Technical judgement required for non-detects. A negative %D indicates that the instrument has greater sensitivity than it had during the initial calibration; conversely, a positive %D indicates that the instrument is less sensitive.

IX. INITIAL AND DAILY CALIBRATION (cont'd)

1 - Requirements are for those compounds other than SPCCs
+ - Detects
ND - Non-detects
SPCC - System performance calibration compound
RF - Response factor
RSD - Relative standard deviation
%D - Percent difference

Actions should be applied to all results in the volatile fraction when contractual and established regulatory criteria are not met for the initial calibration. When daily calibration criteria are not met, actions only apply to samples associated with that particular daily standard.

B. Semivolatile Calibration Verification

Date of Initial Calibration: _____

Date(s) of Daily Calibration: _____

Calibration Date	QC Criteria Out RF	%RSD	%D	Compounds	Samples Affected and Action

IX. INITIAL AND DAILY CALIBRATION (cont'd)

Calibration Date	QC Criteria Out RF	%RSD	%D	Compounds	Samples Affected and Action

Action:

Calibration	Accept (+, ND)	Approximate (J/UJ)	Reject (R)
Initial	RF>0.05 RSD<30%	RSD>30%(+, ND) RF<0.05 (+)	RF<0.05(ND)
Daily	RF>0.05 %D<25%	%D>25%(+, ND)* RF<0.05 (+)	RF<0.05(ND)

NOTES:

* - Technical judgement required for non-detects. A negative %D indicates that the instrument has greater sensitivity than it had during the initial calibration; conversely, a positive %D indicates that the instrument is less sensitive.
+ - Detects
ND - Non-detects
RF - Response factor
RSD - Relative standard deviation
%D - Percent difference

Actions should be applied to <u>all</u> results in the base neutral or acid extract fraction when contractual and established regulatory criteria are not met for the initial calibration. When daily calibration criteria are not met, actions only apply to samples associated with that particular daily standard.

C. Pesticide Calibration Verification

1. Evaluate pesticide linearity using Form 8D and associated raw data. Using the table below, note those compounds failing to meet the 10% criteria for linearity. The compounds to be checked are aldrin, endrin, 4,4'-DDT, and dibutylchlorendate.

IX. INITIAL AND DAILY CALIBRATION (cont'd)

Compound	Date(s) of Analyses	Column ID	Samples Affected	Action

Action: If criteria for initial linearity are not met, flag all associated quantitative results "J."

2. Evaluate continuing calibration linearity using Form 9 and associated raw data. Using the table on the following page, note those compounds failing to meet the 15% criteria for quantitation (20% for confirmation).

C. Pesticide Calibration Verification

Date/Time	Compound	%D	Column	Samples Affected	Action

IX. INITIAL AND DAILY CALIBRATION (cont'd)

C. Pesticide Calibration Verification

Date/Time	Compound	%D	Column	Samples Affected	Action

Action: If %D between calibration factors is greater than 15% for the compound(s) being quantitated (20% for compounds being confirmed) flag all positive results "J."

3. Using Form 9, evaluate retention time for 4,4'-DDT. If less than 12 minutes, evaluate raw data for compound separation. If adequate separation is not achieved, reject all affected compound data "R."

4. Also using Form 9, evaluate retention time windows for all other compounds. Using the table below, note any standards that fail to fall within the established windows.

Compound	Column	Date/Time of Analysis	Samples Affected	Action

IX. INITIAL AND DAILY CALIBRATION (cont'd)

C. Pesticide Calibration Verification

Action: If no peaks are present on the chromatograms either near or within the established retention time windows of the deviant target compounds, the data is valid and no qualification is necessary.

If the affected sample chromatograms contain peaks which may be of concern, all positive results and quantitation limits shall be flagged "R."

5. Review Form 8D for endrin and 4,4'-DDT breakdown. If the breakdown for either compound is greater than 20%, flag all endrin or 4,4'-DDT data "J." If 1) DDD, DDE or 2) endrin ketone or endrin aldehyde are positive, then flag 1) 4,4'-DDT or 2) endrin quantitation limit "R." Flag results for DDD or DDE, endrin ketone or endrin aldehyde as presumptively present (NJ).

6. Using Form 8E, evaluate dibutylchlorendate (DBC) retention time shifts. If the retention time shift for DBC is greater than 2% for packed columns and greater than 0.3% for capillary, flag affected sample results "R." List below the samples with retention time shifts falling outside the 2% (0.3%) window.

_____

_____

_____

_____

7. Evaluate run sequence to ensure that the 72 hour sequence has been followed for GC analysis using Form 8E and associated raw data, as applicable.

X. INTERNAL STANDARD AREA SUMMARY

Review Form 8A, 8B, and 8C for internal standard areas. List in the table below, any outliers.

Sample Number	Date Analyzed	Fraction	Action

X. INTERNAL STANDARD AREA SUMMARY (cont'd)

Sample Number	Date Analyzed	Fraction	Action
_____	_____	_____	_____
_____	_____	_____	_____
_____	_____	_____	_____

Action: If an internal standard area is outside the -50 to +100% of the associated standard:

1) Flag all positive results for compounds quantitated against that internal standard "J."

2) Flag all non-detects for compounds quantitated against that internal standard "UJ."

3) Extremely low internal standard area counts shall have associated data flagged "R."

Data Package reviewed by: _____ Date: _____
Signature

REFERENCES

Water Quality Parameter Data Validation Guidelines (Draft), Prepared for Rockwell International Aerospace Operations, Rocky Flats Plant, Golden, Colorado, September 1989.

- U.S. Environmental Protection Agency, Laboratory Data Validation Functional Guidelines for Evaluating Inorganics Analyses, Prepared for the Hazardous Site Evaluation Division, July 1988.

- U.S. Environmental Protection Agency, Statement of Work for Inorganics Analysis, SOW No. OLM02.0 (current edition).

- U.S. Environmental Protection Agency, Methods for Chemical Analysis of Water and Wastes, EPA-600/4-79-020, March 1963.

- U.S. Environmental Protection Agency, Hazardous Site Evaluation Division. Laboratory Data Validation Functional Guidelines for Evaluating Organics Analyses. February 1, 1988.

- U.S. Environmental Protection Agency, Test Methods for Evaluating Solid Waste, SW-846, Third Edition, November 1986.

- U.S. Department of Energy Environmental Measurements Laboratory Procedures Manual, HASL 300.

- Code of Federal Regulations, 40 CFR 136, "EPA Regulations on Test Procedures for the Analysis of Pollutants."

- Code of Federal Regulations, 40 CFR 141, "National Primary Drinking Water Regulations."

- Naval Energy and Environmental Support Activity, NEESA 20.2-047B, 1988.

- Environmental Contract Quality Management Guide, Naval Facilities Engineering Command, P-1071, December 1992.

- Code of Federal Regulations, 40 CFR 260.21, "Petitions for Equivalent Testing for Analytical Methods.

APPENDIX D

SAMPLE ANALYSIS REVIEW
DATA QUALIFIERS AND STATUS CODES

QUALIFIERS AND STATUS CODES FOR ORGANICS AND INORGANICS

Reviewer Validation Qualifiers

U	The material was analyzed for but not detected. The associated numerical value is the sample quantification limit.
UJ	The material was analyzed for but not detected. The associated value is an estimate and may be inaccurate.
J	The associated numerical value is an estimated quantity.
R	Quality control indicates that the data are unusable. Resampling or reanalysis is necessary for a usable result.

Validation Status Codes

VU	Verified Unvalidated
VI	Verified Invalid
VV	Verified Valid
UU	Unverified Unvalidated

Quantifier Codes for Organics and Inorganics

H	Holding times were exceeded
S	Standards out of SOW/SOP specifications
C	Correlation coefficient < 0.995
R	Percent recovery calibration (initial or continuing) out of control limits
B	Presumed contamination from blank analysis
L	Laboratory control sample percent recovery out of control limits
E	Duplicate sample results not within control limits
Q	MSD, MS, or RPD out of control limits
F	Field duplicates showed poor agreement
$	Reported result or other information was incorrect
*	Unusual problems with the data that have been described in the data summary
Z	The QC level of validation has been reduced

APPENDIX E

RESPONSE TO COMMENTS

RESPONSE TO COMMENTS
LONG BEACH NAVAL SHIPYARD RI/FS
DRAFT DATA MANAGEMENT PLAN

July 15, 1994 Sheet

Comments by: **California Department of Toxic Substances Control (DTSC)**
Response by: **Susan R. Livenick/Rosemary Holdsworth, Bechtel**

Number	Comment	Response
	General Comment	
1	*Eighteen (18) LARWQCB forms for reporting analytic data for independent data validation purposes were transmitted by DTSC without comment.*	*All analytic information required for data validation will be available to the agencies. BEIDMS, the Oracle-based data management system used by the CLEAN II contractor, can provide data in almost any format requested. Data requested by the agencies will be provided as requested in hard copy (original reports) or downloaded in report format from BEIDMS after CLEAN II data validation is completed by the contractor. Completion of LARWQCB data validation forms is not within the scope of the CLEAN II contract.*
	Specific Comments	
1	*The regulatory limit for holding time for herbicide analyses is to be extracted within 7 days and analyzed within 40 days, not the 40 days after extraction as stated on page 3.*	*NEESA 20.2-047B guidance provides for either CLP or SW846 methods. Per CLP requirements, herbicides must be extracted within 10 days and analyzed within 40 days after extraction; per SW846, extraction for herbicides must occur within 7 days and analysis within 40 days after extraction. DMP Appendix C Table II (Page 3) has been changed to incorporate the requirement to meet CLP and/or SW-846 requirements.*

RESPONSE TO COMMENTS
LONG BEACH NAVAL SHIPYARD RI/FS
DRAFT DATA MANAGEMENT PLAN

July 15, 1994 Sheet

Comments by: **California Department of Toxic Substances Control (DTSC)**
Response by: **Susan R. Livenick/Rosemary Holdsworth, Bechtel**

Number	Comment	Response
2	*On Page 4, the preservation requirement for cyanide should also include pH of greater than 12.*	*NEESA 20.0-047B requirements for cyanide include pH greater than 12 for both CLP and SW846 methods. Appendix C Table II (page 4) has been changed to incorporate pH>12 as a preservation requirement.*
3	*On Page 5, the holding time limits for Total Petroleum Hydrocarbons are for different analytic methods and are as follows:* *418.1 28 days* *8015M diesel 7/40 days* *8015M gas 14 days*	*NEESA 20.0-047B provides no guidance for TPH preservation or holding times. Holding time requirements for LUFT TPH range from "14 days maximum" for TPH as gasoline to" 14 days; analyze extract within 40 days for diesel fuel". Additionally, although CLP and SW846 do not address TPH, in both guideline documents, non-halogenated volatile organic holding times vary based on components (gasoline or diesel), method, and matrix.* *In the CTO 37 IR program, TPH is not a chemical of concern at any site. For this reason, Appendix C Table II (page 5) holding time for TPH has been revised to state that TPH holding time requirements are method-specific.*

RESPONSE TO COMMENTS
LONG BEACH NAVAL SHIPYARD RI/FS
DRAFT DATA MANAGEMENT PLAN

July 15, 1994 Sheet

Comments by: California Department of Toxic Substances Control (DTSC)
Response by: Susan R. Livenick/Rosemary Holdsworth, Bechtel

Number	Comment	Response
4	*On Page 5, pH is best analyzed in the field.*	*Both field and laboratory measurements of pH is routinely performed; however laboratory value is electronically entered into the data management system. As a part of the data verification/ validation/evaluation process, field measurement of pH is compared to laboratory measurement. Actual pH will be consideded to be the pH measured in field.* *DTSC comment is noted; no change to the text is required.*
5	*The holding time for Reactivity-Cyanide is 14 days and Reactivity-Sulfide is 7 days, not NA as stated on Page 5.*	*According to NEESA 20.2-047B, under both CLP and SW846 procedures, holding time for cyanide in the liquid form is 14 days and holding time for sulfide in the liquid form is 7 days. Holding times for cyanide and sulfides in the solid form have not been established. Appendix C Table II, Page 5 has been revised to show holding times for Reactivity-Cyanide of "14 days-liquid, NA-solid" and Reactivity-Sulfide as "7 days-liquid, NA-solid".*

RESPONSE TO COMMENTS
LONG BEACH NAVAL SHIPYARD RI/FS
DRAFT DATA MANAGEMENT PLAN

July 15, 1994 Sheet

Comments by: **California Department of Toxic Substances Control (DTSC)**
Response by: **Susan R. Livenick/Rosemary Holdsworth, Bechtel**

Number	Comment	Response
6	*On Pages 10 and 40, the Department will require corrective actions to be taken for all analytes where concentrations exceed spike concentrations.*	*NEESA 20.2-047B guidance requires that Matrix Spike/Spike Duplicates meet CLP requirements for recoveries. Current EPA Guidance for MS/MSD recovery is found in "Laboratory Data Validation Functional Guidelines for Evaluating Inorganics Analyses" (July 1988). The guidance document (Section VII. MATRIX SPIKE SAMPLE ANALYSIS, B. Criteria page 11) specifies:* *Spike recovery (%R) must be within the limits of 75-125%. However spike recovery limits do not apply when sample concentrations exceeds the spike concentration by a factor of 4 or more.* *DTSC comment is noted; however the DMP text will reflect NEESA/EPA guidance. No change to Appendix C pages 10 and 40 will be made.*

RESPONSE TO COMMENTS
LONG BEACH NAVAL SHIPYARD RI/FS
DRAFT DATA MANAGEMENT PLAN

July 15, 1994 Sheet

Comments by: California Department of Toxic Substances Control (DTSC)
Response by: Susan R. Livenick/Rosemary Holdsworth, Bechtel

Number	Comment	Response
7	*On pages 11 and 53, matrix spike actions should be applied when the matrix spike recoveries per fraction do not meet the required recovery windows.*	*As stated above, NEESA 20.2-047B guidance requires that Matrix Spike/Spike Duplicates meet CLP requirements for recoveries. EPA CLP guidance is given National Functional Guidelines for Organic Data Review, draft revised June 1991. Section VII. MATRIX SPIKE SAMPLE ANALYSIS, E. Action, pages 25-26 (for volatile organics) and 61-62 (for semi-volatile organics) provides:* *1. No action is taken on MS/MSD data alone. However, using informed professional judgement the data reviewer may use the matrix spike and matrix spike duplicate results in conjunction with other QC criteria and determine the need for some qualification of the data.* *2. The data reviewer should first try to determine to what extent the results of the MS/MSD effect the associated data. This determination should be made with regard to the MS/MSD sample itself as well as specific analytes for all samples associated with the MS/MSD.* *3. In those instances where it can be determined that the results of the MS/MSD effect only the sample spiked, then qualification should be* *(con't)*

RESPONSE TO COMMENTS
LONG BEACH NAVAL SHIPYARD RI/FS
DRAFT DATA MANAGEMENT PLAN

July 15, 1994 Sheet

Comments by: California Department of Toxic Substances Control (DTSC)
Response by: Susan R. Livenick/Rosemary Holdsworth, Bechtel

Number	Comment	Response
7 (cont)		*limited to this sample alone. However it may be determined through the MS/MSD results that a laboratory is having a systematic problem in the analysis of one or more analytes, which effects all the associated samples.* *4. The reviewer must use professional judgement to determine the need for positive results of non-spiked compounds.* *Typically the qualification applied to the samples when the compounds included in the MS/MSD are out of control limits is left to the professional judgement of a validator. Data validation guidance used on CTO37 implies that the MS/MSD should have at least half of the compounds out of the recovery limits before the accompanying sample is qualified. This guidance however, and the final interpretation of MS/MSD recovery is left to the technical judgement of the validator, as the EPA CLP guidance directs.* *DTSC comment is noted; however, NEESA/CLP guidance will be followed. No change will be made to Appendix C.*

RESPONSE TO COMMENTS
LONG BEACH NAVAL SHIPYARD RI/FS
DRAFT DATA MANAGEMENT PLAN

July 15, 1994 Sheet

Comments by: **California Department of Toxic Substances Control (DTSC)**
Response by: **Susan R. Livenick/Rosemary Holdsworth, Bechtel**

Number	Comment	Response
8	*The Department will reject any analytic results when the holding times are exceeded.*	*Holding times are critical for analytes such as volatile organics. In other cases, holding times may be somewhat arbitrary. Although in all cases, laboratories are required to complete analyses within holding times. If holding times are exceeded, significance of the holding time for that analyte will be discussed with DTSC.* *DTSC comment is noted. No change to Appendix C is required.*