STATE OF CALIFORNIA

CALIFORNIA REGIONAL WATER QUALITY CONTROL BOARD
SAN FRANCISCO BAY REGION
2101 WEBSTER STREET, SUITE 500
OAKLAND, CA 94612
(510) 464-1255

N00296.001412
MOFFETT FIELD
SSIC NO. 5090.3

Mr. Stephen Chao
West Div Engineer in Charge
Department of the Navy
Western Division
Naval Facilities Engineering Command
900 Commodore Way, Bldg. 101
San Bruno, CA 94066-0720

June 11, 1992
File No. 21289.8009 [EA]

Subject: Comments on Additional Tank and Sump Investigation Field Work Plan, Moffett Field, California

Dear Mr. Chao:

The following comments are based on the review of the Additional Tank and Sump Investigation Field Work Plan by the San Francisco Regional Water Quality Control Board staff.

In general, clean-up goals for the San Francisco Bay Area should be defined by the "Tri-Regional Board Staff Recommendations for Preliminary Evaluation and Investigation of Underground Tank Sites" dated August 1990. The use of LUFT guidelines for clean-up levels is not appropriate for the San Francisco Bay basin where the groundwater elevations are much higher than the rest of the state. The Tri- Regional document states that the origin of the 100 ppm level for fuels in soil is to help determine if a significant release has occured which would warrant further investigation. Clean-up levels within this region generally require a non-detect for gasoline and diesel. These levels depend on the detection limits of the analytic method utilized, but commonly translate into 1 ppm for gasoline, 10 ppm for diesel and 1 ppm total volatile organic compounds in soil. However, the clean-up levels are not rigid and should be determined by assessing the potential impact of the residual soil contamination on the groundwater.

SPECIFIC COMMENTS:

pg. 14 Is the on-board mobile laboratory used with the Geoprobe state certified?

pg. 11 Initial samples should be taken from the north side of Tank 53 in addition to the other samples. Though the previous samples showed levels of BTEX lower than 100 ppm, there is significant contamination in the vicinity and the groundwater gradient is to the north towards the Bay.

pg. 19 The text states, "in general, soil samples for chemical analysis will be collected at 5-foot intervals". What would be the exceptions? Will these samples be analyzed on-site

1412
R/N 48

or at an off-site laboratory? We recommend that all soil borings be sampled for chemical analysis at a state certified laboratory at least every five feet, with modification allowed to include contaminated areas or changes in lithology.

pg. 21 What method will be used to "screen" the groundwater samples taken with the Geoprobe?

pg. 24 The groundwater samples from monitor wells in the vicinity of tank 53 should include analysis for BTEX, by EPA method 602, as well as VOC's and TPH. The text refers to using the presence of BTEX compounds in the groundwater to help place the well W53-2(A1), yet BTEX is not included in the analytical parameters once the well is installed.

If you have any questions or concerns, please feel to call me at the San Francisco Bay Regional Water Quality Control Board at (510) 464-3980.

Sincerely,

Elizabeth J. Adams

Elizabeth J. Adams
Project Manager

cc: Ms. Roberta Blank
EPA Region IX

Mr. Cyrus Shabahari
DTSC

Admin Record

DWG NO. 9373-3

NOZZ.	SIZE	QTY	SERVICE	DESCRIPTION	RAT.	DET'L
A	16	1	MANWAY	T-BOLT CLOSURE, HINGED, C/W 4 BOLTS + 1 SQ. HD. 1/2" WALL, CLARK KENNEDY	75#	5
B	3	1	INLET	SCREWED COUPLING SA-181-60	3000#	4
C	3/4	1	JKT. VENT	SCREWED COUPLING SA-181-60 + SQ. HD. PLUG C/W 180° BEND	150#	4
D	3	2	VIEW PORT	SCR. 1/2 IPS C. SA-181-60, 4" SCH 10S PIPE SA-312-304, S.C. #S-5400	150#	2
E	3	1	OUTLET	SCH. 40 PIPE SA-53B, AFSO S.C. SA-181, 90° LR ELBOW SA-234-WPB	150#	7
F	3/4	1	JKT. DRAIN	SCREWED COUPLING SA-181-60 + SQ. HD. PLUG	3000#	4

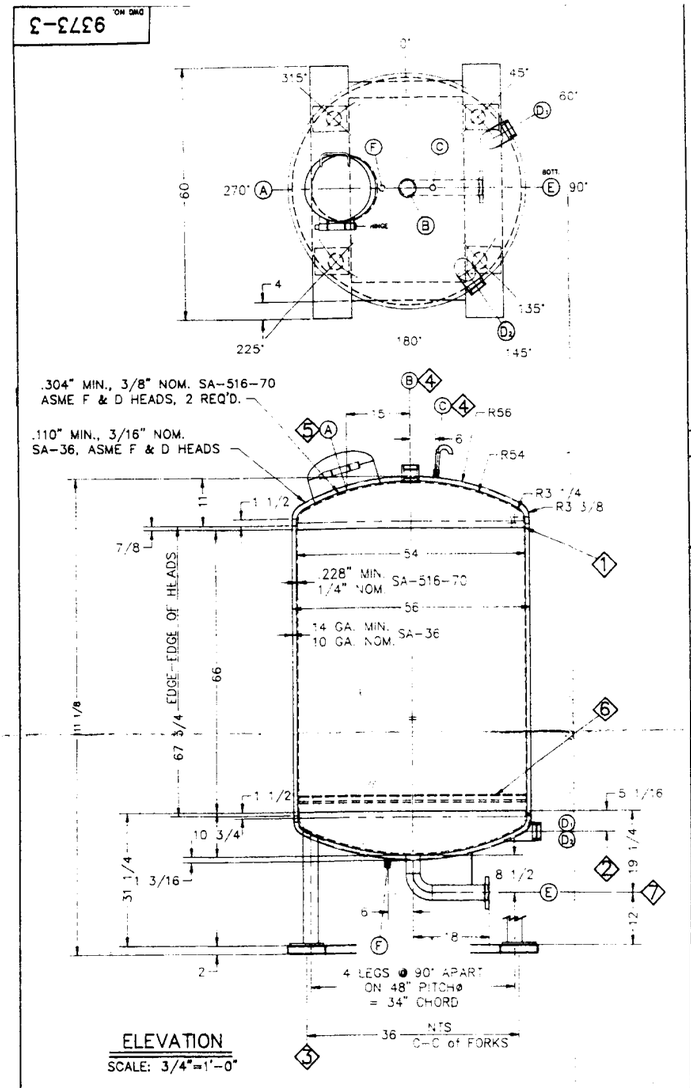

ELEVATION

SCALE: 3/4"=1'-0"

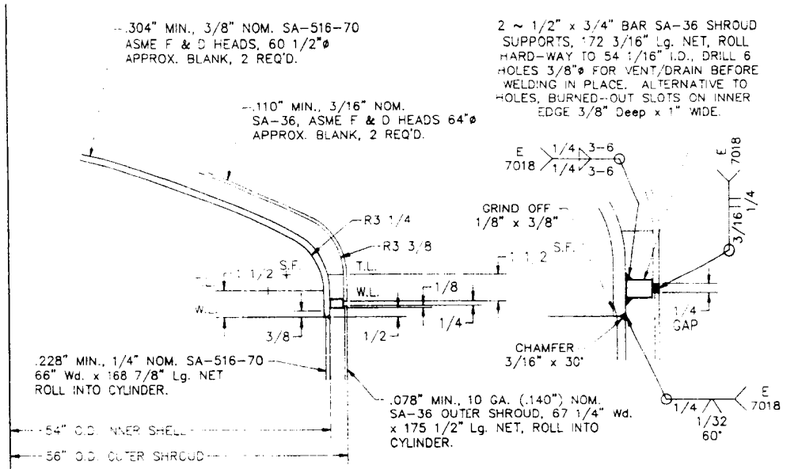

DET'L. 1 TYPICAL VESSEL WELDMENT

SCALE: 3"=1'-0"

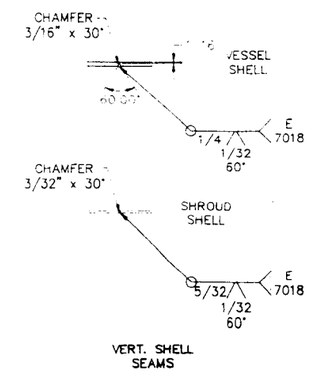

VERT. SHELL SEAMS

VESSEL TO BE CONSTRUCTED IN ACCORDANCE WITH:
ASME CODE SECT. VIII, DIV. 1, 1992 Ed. + 1992 ADDENDUM
CSA B51M CODE
CEMCORP SPECIFICATION NO.

VESSEL ITEM NO. — SERIAL NO.
CODE UW-12(c) — CRN NOT REQ'D.
INSPECTION BY

VESSEL DATA	VESSEL	JACKET
DESIGN PRESSURE, PSIG	75	25
DESIGN TEMPERATURE, °F	200	200
MIN.DESIGN TEMP., °F	20	20
HYDRO TEST PRESS., PSIG	113	38
HYDRO TEST TEMP. °F	60	60
OPERATING PRESSURE, PSIG	20	20
OPERATING TEMP., °F		
DYE PENETRANT	N/A	N/A
STRESS RELIEF	NO	NO
RADIOGRAPHY	NONE	NONE
CORROSION ALLOWANCE	1/16	0
JOINT EFFICIENCY	0.7	0.7
TYPE OF HEADS	ASME F & D	ASME F & D
MAWP NEW & COLD	LIMITED BY	
MAWP HOT & CORR.	LIMITED BY	
CAPACITY (FULL)		
WEIGHT,EMPTY	FULL OF LIQUID	
SHIPPING WEIGHT		

MATERIAL SPEC.	MATERIAL	ALLOW. STRESS
SHELL	SA-516-70	17500 PSI
HEAD	SA-516-70	14875 PSI
JACKET	SA-36	12700 PSI
NOZZLE NECKS	SA-53B-ERW	
NOZZLE FLANGES	SA-181	
MANHOLE NECKS	SA-285-C	11730 PSI
MANHOLE FLANGES		
REINF. PADS		
SUPPORTS		
EXT. BOLTING		
INT. BOLTING		
GASKETS		
INSUL'N SUPPORTS		
INSULATION N/A		
PAINTING INSIDE: EPOXY PAINT		
OUTSIDE: ENAMEL PAINT		

NOTES
1. VESSEL TO BE FREE FROM DIRT, WELD SPATTER AND OTHER FOREIGN MATERIALS BEFORE SHIPMENT.
2. BOLT HOLES IN FLANGES TO STRADDLE CENTRE LINE UNLESS OTHERWISE NOTED.
3. ALL OPENINGS TO BE PROTECTED WITH WOODEN BLANKS AND SCREWED CONNECTIONS TO BE PLUGGED WITH CLOSURE PLUGS DURING TRANSIT.

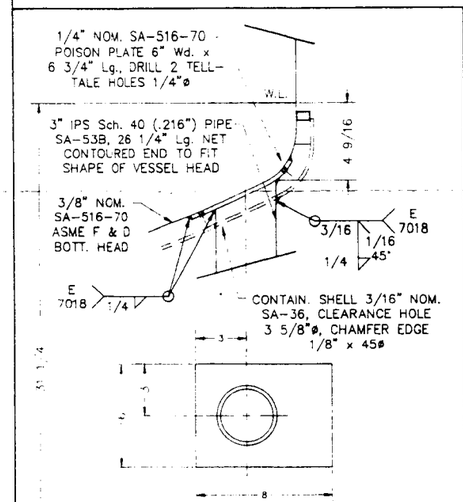

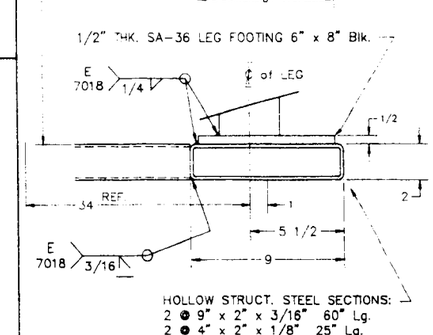

DET'L. 3 LEG WELDMENT

SCALE: 3"=1'-0" 4 SETS REQ'D.

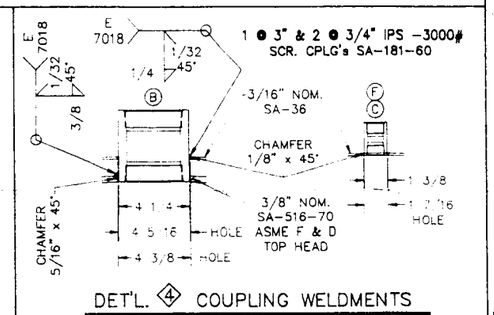

DET'L. 4 COUPLING WELDMENTS

SCALE: 3"=1'-0"

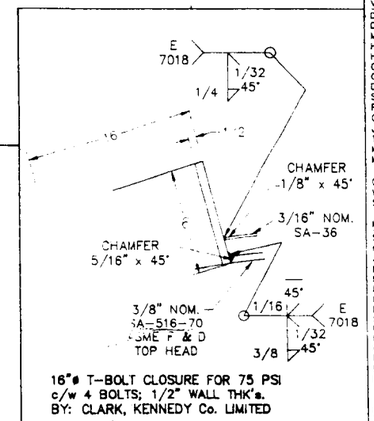

DET'L. 5 M.W. NECK WELDMENT

SCALE: 3"=1'-0"

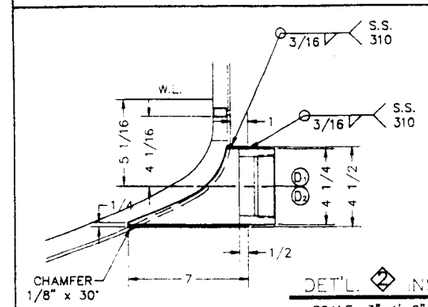

DET'L. 2 INSPECTION VIEW PORTS

SCALE: 3"=1'-0"

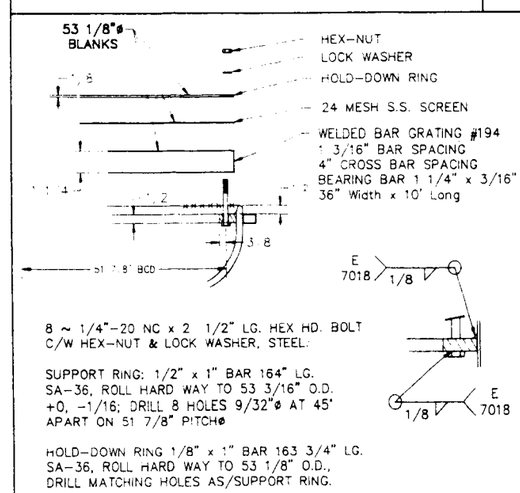

DET'L. 6 EXPLODED VIEW OF SCREENS

SCALE: 3"=1'-0"

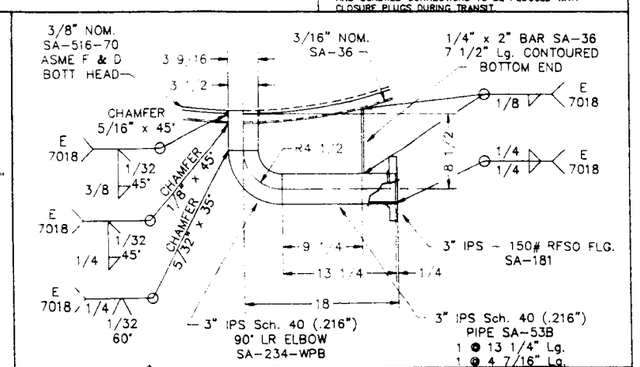

DET'L. 7 OUTLET (E)

SCALE: 1 1/2"=1'-0"

HAMILTON DYNAMIC
PROCESS EQUIPMENT • PRESSURE VESSELS • FILTRATION EQUIPMENT

cemcorp LTD.

LO-BAK AQUA HD50L DOUBLE-WALLED VESSEL
FOR:
BY: HAMILTON DYNAMIC

DWN BY R. P.	DATE Oct. 7/93	FILE NO. 9373-3
CHKD BY	SCALE As Noted	DWG NO. 9373-3
APP'D BY	ISSUE	

ISSUE DATE BY REVISIONS APP'D

THIS DOCUMENT IS THE COPYRIGHT PROPERTY OF CEMCORP LTD. IT IS ISSUED IN STRICT CONFIDENCE, AND SHALL NOT BE REPRODUCED, COPIED OR USED IN WHOLE OR PART IN ANY MANNER WHATSOEVER WITHOUT THE WRITTEN PERMISSION OF CEMCORP LTD.