N30519_000035
NFD POINT MOLATE
SSIC NO. 5090.3

WARNING

SENSITIVE RECORD

PORTIONS OF THIS RECORD ARE CONSIDERED SENSITIVE AND NOT FOR PUBLIC VIEWING. THIS DOCUMENT CONTAINS THE FOLLOWING TYPE OF SENSITIVE INFORMATION:

- ☐ PRIVACY ACT INFORMATION
- ☐ ARCHAEOLOGICAL LOCATION COORDINATES OR MAPS
- ☐ ATTORNEY / CLIENT DELIBERATIVE PROCESS INFORMATION
- ☐ COMMAND INTERNAL RULES AND PRACTICES
- ☐ COMMERCIAL TRADE SECRETS OR CONFIDENTIAL COMMERCIAL INFORMATION
- ☐ DRAWINGS OF MILITARY STRUCTURES / BUILDINGS OR FEDERAL BUILDINGS
- ☒ STREET LEVEL MAP(S) OF MILITARY INSTALLATIONS OR FEDERAL BUILDINGS
- ☐ GEOLOGICAL / GEOPHYSICAL INFORMATION / DATA CONCERNING WELLS

RECORDS OFFICE REMINDER: REVIEW AND SAFEGUARD SENSITIVE INFORMATION CONTAINED IN THE DOCUMENT PRIOR TO PUBLIC ACCESS

N30519_000035
NFD POINT MOLATE
SSIC NO. 5090.3.A

CLEAN

Contract No. N6247488-D-5086

Contract Task Order 0248

Navy Engineer-in-Charge: Louciano Ocampo
PRC Project Manager: Jeffrey D. Reichmuth

NAVAL FUEL DEPOT POINT MOLATE
CALIFORNIA

MARCH 1994 QUARTERLY REPORT

Prepared By

PRC Environmental Management, Inc.
1099 18th Street, Suite 1960
Denver, CO 80202
303/295-1101

June 24, 1994

CONTENTS

Section		Page
1.0	INTRODUCTION	1-1
1.1	HISTORIC DEVELOPMENT OF THE FACILITY	1-1
1.2	FACILITY OPERATIONS AND SYSTEMS	1-3
1.2.1	Primary and Secondary Fuel Storage	1-3
1.2.2	Sanitary Sewer and Storm Drain System	1-4
1.2.3	Fuel Reclamation/Ballast Treatment System	1-4
1.3	SUMMARY OF ENVIRONMENTAL CONDITIONS	1-8
1.3.1	Treatment Ponds Area	1-9
1.3.2	Waste Disposal Area and Sandblast Areas	1-9
1.4	PREVIOUS INVESTIGATIONS	1-10
1.4.1	ERM-West 1990 Shallow Soil Investigation	1-10
1.4.2	CTO 0010 Site Inspection	1-11
1.4.3	CTO 0143 Site Characterization	1-12
1.5	HYDROGEOLOGIC SETTING	1-17
2.0	MONITORING WELL SELECTION	2-1
3.0	FIELD AND LABORATORY METHODS AND PROCEDURES	3-1
3.1	GROUNDWATER SAMPLING	3-1
3.1.1	Monitoring Well Development and Presampling Purging	3-1
3.1.2	Groundwater Sample Collection	3-3
3.2	WATER LEVEL AND PRODUCT THICKNESS MEASUREMENTS	3-9
3.2.1	Water Level Measurement	3-10
3.2.2	Product Thickness Measurement	3-10
3.3	ANALYTICAL METHODOLOGIES	3-10
3.3.1	Total Petroleum Hydrocarbons	3-11
3.3.2	Volatiles	3-11
3.3.3	Semivolatiles	3-12
3.3.4	Pesticides/PCBs	3-12
3.3.5	Organic Lead	3-12
3.3.6	Metals	3-13
3.3.7	Inorganic Parameters	3-13

CONTENTS (Continued)

Section		Page
	3.3.8 Biochemical Analyses	3-13
	3.3.9 Hydrocarbon Analyses	3-13
4.0	WATER LEVEL DATA AND PRODUCT PLUME IDENTIFICATION	4-1
	4.1 REGIONAL GROUNDWATER TRENDS	4-1
	4.2 SITE-SPECIFIC GROUNDWATER TRENDS	4-1
	4.3 FLOATING PRODUCT PLUME EXTENT	4-3
5.0	CHEMICAL ANALYSIS RESULTS	5-1
	5.1 DISTRIBUTION OF ORGANIC CONSTITUENTS	5-1
	5.1.1 TPH Purgeable and Extractable	5-1
	5.1.2 Volatile Organic Compounds	5-4
	5.1.3 Semivolatile Organic Compounds	5-7
	5.1.4 Pesticides/Polychlorinated Biphenyls	5-7
	5.2 RESULTS OF INORGANIC CONSTITUENTS	5-8
	5.3 RESULTS OF WATER QUALITY ANALYSES	5-8
	5.4 RESULTS OF BIOCHEMICAL ANALYSES	5-9
	5.5 RESULTS OF LABORATORY PRODUCT IDENTIFICATION	5-9
	5.6 GROUNDWATER DATA VALIDATION	5-11
	5.7 QA/QC SAMPLE RESULTS	5-16
	5.7.1 Field Duplicates	5-16
	5.7.2 Matrix Spike and Matrix Spike Duplicate Samples	5-19
	5.7.3 Laboratory Method Blanks	5-20
	5.7.4 Trip Blank Samples	5-22
	5.7.5 Results of Equipment Rinsate Blanks	5-23
	5.7.6 Quarterly Data Completeness Summary	~~5-23~~ 5-24
6.0	RECOMMENDATIONS	6-1
	6.1 CONFIRMATION OF SPECIFIC COMPOUNDS	6-1
	6.2 DELETION OF SPECIFIC COMPOUNDS	6-1
	6.3 ADEQUACY OF MONITORING LOCATIONS	6-2
7.0	REFERENCES	7-1

CONTENTS (Continued)

Appendices

A WATER LEVEL AND PRODUCT THICKNESS MEASUREMENTS
B GROUNDWATER ANALYTICAL DATA
C HYDROCARBON IDENTIFICATION AND ANALYTICAL DATA
D DATA VALIDATION REPORTS
E MONITORING WELL INSTALLATION RECORDS
F MONITORING WELL DEVELOPMENT DATA SHEETS
G GROUNDWATER SAMPLING DATA SHEETS

PLATES

1 MONITORING WELL AND PIEZOMETER LOCATION MAP
2 WATER LEVEL CONTOUR MAP

FIGURES

Figure		Page
1-1	FACILITY LOCATION MAP	1-19
1-2	IR SITES AND AREA OF CTO 0248 INVESTIGATION	1-20
2-1	AREA DESIGNATIONS AND CONTENT OF BEDROCK SUBCROPS	2-2
4-1	DISTRIBUTION OF FLOATING HYDROCARBONS	4-5
5-1	DISTRIBUTION OF BENZENE FROM TPH-PURGEABLE ANALYSIS	5-25
5-2	DISTRIBUTION OF TOLUENE FROM TPH-PURGEABLE ANALYSIS	5-26
5-3	DISTRIBUTION OF ETHYLBENZENE FROM TPH-PURGEABLE ANALYSIS	5-27
5-4	DISTRIBUTION OF XYLENE FROM TPH-PURGEABLE ANALYSIS	5-28
5-5	DISTRIBUTION OF OTHER COMPOUNDS FROM TPH-PURGEABLE ANALYSIS	5-29
5-6	DISTRIBUTION OF JP-4 AND DIESEL (F-76) FROM TPH-EXTRACTABLE ANALYSIS	5-30
5-7	DISTRIBUTION OF BUNKER FUEL FROM TPH-EXTRACTABLE ANALYSIS	5-31
5-8	DISTRIBUTION OF OTHER COMPOUNDS FROM TPH-EXTRACTABLE ANALYSIS	5-32

CONTENTS (Continued)

Figure		Page
5-9	DISTRIBUTION OF BENZENE FROM VOLATILE ORGANIC ANALYSIS	5-33
5-10	DISTRIBUTION OF TOLUENE FROM VOLATILE ORGANIC ANALYSIS	5-34
5-11	DISTRIBUTION OF ETHYLBENZENE FROM VOLATILE ORGANIC ANALYSIS	5-35
5-12	DISTRIBUTION OF XYLENE FROM VOLATILE ORGANIC ANALYSIS	5-36
5-13	DISTRIBUTION OF VOLATILE CHLORINATED COMPOUNDS	5-37
5-14	DISTRIBUTION OF VARIOUS SEMIVOLATILE COMPOUNDS	5-38
5-15	DISTRIBUTION OF 2-METHYLNAPHTHALENE	5-39

TABLES

Table		Page
3-1	QUARTERLY GROUNDWATER SAMPLING - LIST OF CHEMICAL ANALYSES	3-14
3-2	QUARTERLY GROUNDWATER SAMPLING - LIST OF PURGING AND SAMPLING EQUIPMENT	3-16
3-3	QUARTERLY GROUNDWATER SAMPLING - LIST OF QA/QC SAMPLES AND CHEMICAL ANALYSES	3-17
5-1	SUMMARY OF TPH DETECTION FREQUENCY AND CONCENTRATIONS	5-40
5-2	SUMMARY OF VOC DETECTION FREQUENCY AND CONCENTRATIONS	5-41
5-3	SUMMARY OF SVOC DETECTION FREQUENCY AND CONCENTRATIONS	5-46
5-4	SUMMARY OF TOTAL AND DISSOLVED METALS DETECTION FREQUENCY AND CONCENTRATIONS	5-51
5-5	ANALYTICAL RESULTS OF MAJOR ANIONS	5-53
5-6	ANALYTICAL RESULTS OF pH, TDS, TOC, AND ORGANIC LEAD	5-54
5-7	ANALYTICAL RESULTS OF BIOCHEMICAL ANALYSES	5-55
5-8	ANALYTICAL RESULTS OF PRODUCT SAMPLES	5-56

CONTENTS (Continued)

Table		Page
5-9	ANALYTICAL RESULTS OF PRODUCT SAMPLES - PNA ANALYSES	5-57
5-10	LABORATORY AND VALIDATION QUALIFIERS	5-58
5-11	PERCENT FULFILLMENT OF QC SAMPLING OBJECTIVES	5-62
6-1	LIST OF SECOND QUARTER 1994 MONITORING WELLS	6-3

1.0 INTRODUCTION

Under Contract Task Order (CTO) 0248, PRC Environmental Management, Inc., (PRC) is conducting follow-up remedial investigation (RI) activities at installation restoration (IR) sites and providing a source control measure at one IR site at Naval Fuel Depot (NFD) Point Molate in Richmond, California. CTO 0248 includes baseline characterization of the near-shore environment (soil and sediment); long-term evaluation of groundwater quality in the near-shore environment; design of corrective measures for known petroleum contamination within the fuel depot's wastewater treatment plant and near-shore areas; and additional characterization and evaluation of corrective measures at a facility waste disposal area. The objectives of this CTO are to provide protection to San Francisco Bay from known or potential petroleum contamination within the fuel depot's wastewater treatment plant and near-shore areas, to determine if petroleum contamination is or has posed a threat to the near-shore environment, and to evaluate the need for further remedial activities at the facility.

Activities under CTO 0248 have been assigned task numbers, including both investigative and design disciplines. Characterization of the near-shore environment is being conducted under Task 2. Characterization of the facility's waste disposal area is being conducted under Task 3. Long-term (quarterly) monitoring of groundwater quality in the near-shore environment is being conducted under Task 4. Source control design for the wastewater treatment plant and near-shore area is being conducted under Task 5. A final RI report, summarizing all characterization activities, will be prepared under Task 6, and Task 7 will include evaluation of baseline sediment quality and recommendations for following ecological assessment activities.

This report summarizes the results of the first quarterly groundwater sampling event conducted under Task 4. It focuses on groundwater quality in the near-shore environment. Figures and tables appear at the end of each section.

1.1 HISTORIC DEVELOPMENT OF THE FACILITY

The Navy acquired the land for NFD Point Molate in 1941. Most of the existing buildings on the site were put to immediate use. An old hotel was used as a base-operated quarters (BOQ), and the houses were renovated for Navy personnel. The fuel pier was constructed in 1941. Four underground welded steel tanks were built in 1942 (Navy owned tanks 21 through 24 on leased land). Navy

Depot, Point Molate, was commissioned on April 12, 1943. In that same year, 22 underground concrete tanks were built (Tanks 1 through 20, B, and C). Five aboveground welded steel tanks were added in 1951 (Tanks DFP 1 through 5), with four aboveground welded steel tanks in later years (two in 1956, two in 1979 - Tanks D, E, F, and G). The depot as it exists today was largely in place by November 15, 1960 when it became a U.S. Naval Fuel Annex. It was integrated with the Navy Supply Center (NSC), Oakland as a Fuel Department in 1962. On July 1, 1973, Point Molate bulk stock changed ownership from the Navy to the Defense Supply Logistics Agency under Phase I of the Integrated Materials Management Plan for Bulk Petroleum. Point Molate became a Defense Fuel Support Point (DFSP), reflecting responsibilities to the Defense Logistic Agency and the Defense Fuel Supply Center (DFSC) Cameron Station, Alexandria, Virginia. In 1993, NSC Oakland was renamed Fleet and Industrial Supply Center, Oakland (FISCO). NFD Point Molate currently maintains its service under FISCO.

The historic Winehaven Buildings and the 100 acres of land on which they are located were nominated to the National Register of Historic Places in October 1978. All subsequent undertakings that will directly or indirectly affect this historic district will require compliance with section 106 of the National Historic Prevention Act of 1966, as amended in 1980, in accordance with the regulations for the protection of historic properties (36 Code of Federal Regulations [CFR] Part 800).

Since 1975, the Navy has begun an extensive modernization program. The improvements have been directed toward continued maintenance and upgrading of existing equipment (Fuel Pier 1977), Spill Prevention Control and Countermeasure (SPCC) planning (1975), new SPPL Pipeline Connection (1984), and automation of pumping and storage operations (1986). In 1979 and 1980, the Fuel Depot was the recipient of the Secretary of the Navy's Environmental Protection Award.

The depot's property covers more than 300 acres in the Potrero Hills near Richmond, California along the eastern shore of San Francisco Bay. NFD Point Molate is located approximately 1.5 miles north of the Richmond-San Raphael Bridge and approximately 2 miles northwest of the city of Richmond. NFD Point Molate is bordered to the north, south, and east by Standard Oil Corporation (Chevron) and to the west by San Francisco Bay. The majority of land around NFD Point Molate is used by Chevron for oil refining or oil storage. Topography at NFD Point Molate ranges from flat reclaimed tidal marsh at sea level to steep dissected slopes nearly 500 feet above mean sea level. Figure 1-1 shows the topography at NFD Point Molate and its location on the San Pablo peninsula.

NFD Point Molate provides bulk storage of JP-5 (jet fuel) and F-76 (marine diesel fuel) in 19 50,000-barrel (BBL) (2.1 million gallon) and four 27,700 BBL (1.1 million gallon) capacity underground tanks. NFD Point Molate also operates a sanitary sewer/storm drain system and a fuel reclamation/ballast treatment system. Included in the fuel reclamation/ballast treatment system are three treatment (settling) ponds which overlie a former sump pond. PRC investigated this area of the facility in a 1990 site inspection (SI) and a 1992 RI under CTOs 0010 (PRC 1990; 1991a, b; 1992a) and 0143 (PRC 1991c; 1992b), respectively. Harding Lawson Associates (HLA) also investigated this area in 1973, 1981, and 1984. It is a known source of petroleum contamination in subsurface soil, the shallow water table, and the near-shore environment. It has not been determined if contamination from the former sump pond and other sources of hydrocarbon contamination pose a threat to the near-shore environment. However, contamination of beach sediments near the treatment ponds as well as at other locations along the facility's shoreline has occurred and may be continuing.

Figure 1-2 shows areas (IR sites) investigated under CTOs 0010 and 0143 as well as areas to be investigated under CTO 0248. Plate 1 shows all cultural information and locations of monitoring wells from current and previous investigation at NFD Point Molate.

1.2 FACILITY OPERATIONS AND SYSTEMS

The facility's primary and secondary storage tanks, fuel reclamation/ballast treatment system, and sanitary sewer and storm drain systems are discussed as follows.

1.2.1 Primary and Secondary Fuel Storage

NFD Point Molate operates 24 primary bulk fuel storage tanks. These tanks are constructed underground and all but tanks 6 through 10, 12, and 13 have been lined. Tanks 1 through 3, 6 through 13, and 21 through 24 currently store F-76; tanks 4, 5, and 14 through 19 store JP-5. Tanks 1 through 13 and 21 through 24 are located on the northern half of the fuel farm; the remaining tanks are on the southern half.

The former drum filling plant (DFP) contains five aboveground steel tanks. These 12,000-gallon capacity secondary storage tanks were used for storage of reclamation, turbine oil, or lube oil. Drum filling operations were discontinued following post war activities, and in 1993 the DFP was updated (modernized) and will continue operation as a lube oil storage and dispensing area.

Two 8,000-gallon capacity secondary storage automotive gasoline pumping and storage (Building 14A) tanks are also operated by the facility.

1.2.2 Sanitary Sewer and Storm Drain System

The site has an on-site collection and treatment system. There are also several septic tank/leach field systems for isolated buildings. The collection system varies in size from 4 inches to 12 inches. There are several combined sewer and drainage lines which should be separated. The sanitary system also has one effluent lift station.

The sanitary system serves 29 single-family housing units as well as administrative and operational buildings. During 1984, the system served 216 persons. The sewage treatment plant has a design capacity of 24,000 gallons per day (gpd). Current average loads are approximately 9,000 gpd.

Primary treatment of the sewage is provided in Building 125, the sewage treatment plant. Secondary treatment occurs when the sewage is discharged to the settling and aeration ponds which are part of the reclamation system. After polishing, oily wastewater is combined with the effluent for chlorination, filtering, and then dechlorination before discharge into San Francisco Bay.

The sewage treatment plant has the capacity to handle present loads. The effluent pump station is in poor condition and needs to be replaced. The collection system can handle present and future loads, but will require maintenance of lines due to clogging and root intrusion.

1.2.3 Fuel Reclamation/Ballast Treatment System

The fuel reclamation/ballast treatment system is constructed over reclaimed tidal flats. Fill material from other areas of the facility was placed over bay sediments to construct the wastewater and sewage treatment plants and the fuel reclamation facility and parts of the sanitary sewer and storm drain system. San Francisco Bay previously extended into this area of the facility. Included in the fuel reclamation/ballast treatment system are holding and settling tanks, recovery components, and wastewater treatment components.

This system enables NFD Point Molate to treat oily ballast, reclaim contaminated fuel, treat human waste, and remove entrained oil from storm water runoff. This system is composed of three

underground tanks with 2,772,000-gallon capacity, three water/oil separators, three interconnected settling ponds, a chlorination/dechlorination plant, and a charcoal filtration unit.

The system receives waste oil and contaminated water from various sources. Sewage waste oil barges (SWOB) are operated to receive contaminated product and ballast from customers located at some distance from the site. Ships offload such products directly at the pier if necessary. Some of the wastewater and product processed by the system, such as by tank/line cleaning, is internally generated by natural phenomena such as water runoff during rainy periods, and by routine practices such as tank stripping. Contaminated product is held and settled in holding or reclamation tanks. Heat is applied, if necessary, to facilitate stratification of the product from contaminants. Water and sediment are primary contaminants. Water and sediment separated from contaminated fuel is processed through the wastewater treatment components. Some water, such as internally generated water runoff, is processed directly through wastewater treatment components. Contaminated ballast can either be processed directly or held for processing at a convenient time. Oil products which cannot be recovered are hauled to a Class A dump or disposed of through the Defense Reutilization and Marketing Office (DRMO).

The fuel reclamation/ballast treatment system has three primary subsystems:

- Holding and settling tanks
- Recovery components
- Wastewater treatment components

1.2.3.1 Holding and Settling Tanks

This subsystem includes all tanks where contaminated fuel and ballast are held pending processing, or settled using gravity and steam heat. Its components are:

Tank	Capacity	Usage
Beach Tank	4,620 gallons	Reclamation
Tank 20	2,100,000 gallons	Ballast
Tank B	579,600 gallons	Ballast
Tank C	100,800 gallons	Sludge
Tank E	420,000 gallons	Reclamation
Tank F	315,000 gallons	Reclamation
Tank G	420,000 gallons	Reclamation

- Beach Tank: The beach tank collects surface run off drainage from the former DFP and associated areas. Therefore, the contents must be considered oil contaminated. The tank is equipped with a pump, activated by a level control with the tank, and a low-level outlet with outlet pipe rising to an approximately full tank level before discharging to Tank E or Tank 20. The arrangement removes the surface level of water in the tank while maintaining a constant level of water at the bottom for manual drainage when necessary.
- Tank 20: Tank 20 is incorporated into the system to receive and store ballast water from barges and vessels and contaminated drainage from various facilities. This tank provides storage for a large influx for subsequent regulated transfer as well as providing for initial settling and separation. Flow to the tank is pumped; flow from the tank is by gravity. Waste deposits after settlement has occurred are pumped to Tank E.
- Tank B: Ballast waters from barges and vessels and contaminated drainage from various facilities can be stored in ballast Tank B prior to transfer to the Fuel Oil Recovery (FOR) Plant. Flow from the tank is by gravity.
- Tank C: Highly contaminated components and other unrecoverables from various treatment processes are pumped to sludge Tank C for storage. The tank's contents are subsequently emptied and trucked off-site for disposal. Flow to the tank is pumped.
- Tank E: The FOR Plant consists of a treatment Tank E and gravity separator (AFL type). Normally, ballast and wastewater are transferred to the treatment tank where heat and emulsion breakers are used to separate oil fractions. The separated oil is drawn off and pumped to the appropriate storage tank. The water component is drawn off and passes through the AFL separator. Oil and water are further separated by gravity action. The resulting effluent enters the separator collection sump where it is pumped to the corrugated plate separator (CPS) units for further treatment.
- Tanks F and G: These are used to separate oil from sump loads that are considered suitable for reclamation. Steam from a portable boiler is used to heat the tanks and to break oil-water emulsions. Oily wastewater is sent to the drainage pump structure. Recovered oil is pumped to appropriate storage tanks. Tank F is currently not in use pending lining of the tank and the berm (diked area) in which it is located.

1.2.3.2 Recovery Components

This subsystem includes separators, filter, pipelines, pumps, outfall boxes, mobile pumps, and vacuum trucks and trailers which are used to recover petroleum, oil, and lubricant (POL) products from the wastewater generated on the site. Its components are:

- Vertical Tube Coalescer (AFL) 1 and 2
- Corrugated Plate Separators (CPS) 1 and 2
- Separator Collection Sump

- Storm Drain Manhole
- Drainage Pump Structure

The vertical tube coalescer receives water effluent prior to pumping it to the CPS units, further separating water/POL mixtures.

The CPS units remove oil and sludge from the facility wastewater as received from various sources. The different sources and products are delivered to the CPS unit independently at rates established by the pumps or by gravity flow. Two equally sized CPS units are provided. The CPS units will effectively separate free oil in the form of discrete droplets and will remove a fraction of emulsified oils, but will not separate dissolved oils. The separators contribute less to the system than originally intended.

The separator collection sump collects surface runoff within the diked area surrounding the FOR Plant and pumps it to the corrugated plate separators. AFLs 1 and 2 discharge directly to CPS filters.

The storm drainage manhole provides interception and gross gravity separation of oil and water components in facility surface runoff. Flow will vary from 0 to 15 cubic feet per second. The manhole consists of inlet pipes, oil/water separating baffles, a control weir/adjustable swing line suction pump (P-2) for removing skimmed oil from the manhole water surface and a level control for pump operation.

The drainage pump structure receives drainage from the following sources:

- Settling and Aeration Basins
- Drawoff from Tanks F and G
- Basin #III oil skimmer
- Sand filter weir box, filter backwash
- Surface runoff from catch basins located in areas subject to oil contamination
- Subsurface drainage from the oil pond area under the settling and aeration basins

Wastewater in the structure is normally pumped to the CPS units for treatment by deep-set pump P-4. During the wet season, inflow can exceed the capability of P-4; the excess is pumped to ballast Tank B or Tank #20 for temporary storage by shallow-set pump P-5.

1.2.3.3 Wastewater Treatment Components

The components of this system are the settling and aeration basins, chlorination/dechlorination system, coagulation unit, and filters. Together they form a subsystem for the final removal of impurities prior to the discharge of treated wastewater from the site via a deep water outfall.

Wastewater enters the system from the various sources listed below:

- Ballast water (both salt water and fresh water) from barges and vessels via the causeway valve box. It is expected to contain oils, fuels, and a wide variation of unknown contaminants. Ballast water is pumped directly to the separation and treatment facilities or to the storage tanks for temporary holding.
- Pumped discharge from the beach tank. This is primarily surface runoff drainage from the drum storage area adjacent to the causeway. It is expected to be primarily rainwater along with any wash from spills or other activities.
- Pumped discharge from the sump in the ballast treatment and FOR Plant areas. The majority of this water will be as received from the existing American Petroleum Institute (API) separator.
- Pumped surface skim from the storm drainage manhole. This product is primarily surface runoff drainage containing the oil skim and water.
- Pump discharge from the drainage pump structure. This structure collects groundwater from the oil pond area (heavily saturated with oils and wastes), the backwash from the gravity lines and filters, and water draw from Tanks F and G.
- Contaminated fuel enters the system from the multiproduct or the Bottom Sediment and Water (BS&W) pipeline systems. Tanks G and F received contaminated product via the multiproduct system; however, tank strippings from these tanks are discharged into the drainage pump structure. Tanks B, C, and 20 receive contaminated product from BS&W system.
- The system also received potentially contaminated groundwater and floating product from a series of five extraction wells installed downgradient of the former sump pond. Operation of these extraction wells has been discontinued due to lack of maintenance and monitoring requirements. Floating product still exists in the shallow water table.

1.3 SUMMARY OF ENVIRONMENTAL CONDITIONS

This section presents areas previously investigated at the facility. The environmental conditions at the Treatment Ponds Area, Waste Disposal Area, and Sandblast Areas are discussed.

1.3.1 Treatment Ponds Area

The sump pond (IR-03) was used for the containment of contaminated fuels, tank sludges, bunker fuel, leaking drums, and potentially other liquid wastes. Other materials, including used batteries, were disposed in the sump pond (PRC 1990). A sheet piling cutoff wall associated with the sump pond was installed in the late 1940s. It was installed to impede the migration of oil within the sump pond toward San Francisco Bay. The cutoff wall extended from 4.5 to 24 feet below the ground surface. It was only moderately effective in its purpose and residual hydrocarbon contamination has migrated toward the shoreline since closure of the sump pond in 1974.

Upon closure, liquids in the sump pond were pumped out and sent to the neighboring refinery for reprocessing. Some of the sludge and waste, including the batteries, were removed before the pond was closed and filled with soil and rock excavated from the south drum lot (PRC 1990). Residual sludge remaining in the former sump pond was tilled with the fill material. In 1976, the Navy installed five extraction wells along the shoreline in an effort to capture floating hydrocarbons (primarily bunker fuel) originating from the former sump pond. These extraction wells have not been effectively or consistently operated since their installation, and a floating product plume currently exists within the wastewater treatment plant area.

1.3.2 Waste Disposal Area and Sandblast Areas

During the SI performed under CTO 0010, PRC investigated two other areas not related to the shoreline. These included a waste disposal area (IR-01) and three areas of sandblasting activities (IR-02). The waste disposal area is located on the southern fuel depot property within a steep ravine, approximately 1,200 feet upgradient of the shoreline. The disposal area was used for the disposal of oily wastes, brush, and other general refuse. Hydrocarbon contamination downgradient of the disposal area is difficult to distinguish, however, from other sources of hydrocarbons (specifically fuel leaks or spills) within this area. Floating product has been observed in one monitoring well located in the ravine downgradient of the disposal area. Floating product appears during and following periods of heavy rainfall during which residual hydrocarbons in the soil are flushed through the ravine. This area of the facility, and possibly other ravines, require assessment of possible containment options.

Based on CTO 0010 results, the sandblasting areas are not considered areas of concern and will not be further investigated upon establishment of background soil and groundwater quality, which is being assessed under CTO 0248.

1.4 PREVIOUS INVESTIGATIONS

The following sections summarize IR investigations completed under the Navy CLEAN program (including CTOs 0010 and 0143) that are pertinent to areas being investigated under CTO 0248.

1.4.1 ERM-West 1990 Shallow Soil Investigation

ERM-West investigated shallow soils in the vicinity of valve boxes, known pipeline leaks, or within known spill areas. No ERM-West borings were installed in the Treatment Ponds Area. Targeted analytes for ERM-West borings were limited to total petroleum hydrocarbons (TPH) extractable, or in some cases benzene, toluene, ethylbenzene, and xylene (BTEX). ERM-West reported TPH results in jet fuel (JP-5), diesel (F-76), or kerosene ranges.

The site-specific stratigraphy and structure were described within the ERM-West (1990) report with the use of several cross sections. Generally, the stratigraphic profile above bedrock consists of clays, sands, and gravels, with occasional peaty lenses. These sediments, interpreted to be alluvial/colluvial in nature, thicken downslope. This interpretation is applicable to the hillside areas at NFD Point Molate, throughout which the majority of ERM's study was conducted. Alluvial and colluvial sediments were also encountered within the Treatment Ponds Area, as was artificial fill.

ERM-West groundwater sampling was limited to the three monitoring wells installed during its investigation. Only JP-5, F-76, and volatile aromatic hydrocarbons were targeted analytes in groundwater samples collected from these wells. Samples from ERM-West well MW-3, located north of the Treatment Ponds Area along the shoreline, contained BTEX; only the concentration of benzene, 62 micrograms per liter (μg/L), exceeded the California Department of Health Services (DHS) action level of 1 μg/L for this compound.

Soil sampling results at several locations investigated by ERM-West indicated TPH contamination, the extent of which was not defined laterally or vertically in some cases. Vertical characterization of petroleum contamination was limited to colluvial or alluvial materials existing above bedrock;

however, further characterization within bedrock was not possible due to drilling techniques, nor was it within the scope of the ERM-West investigation. TPH was present in concentrations above reporting limits in soil samples from 37 borings, and was detected in concentrations greater than 1,000 milligrams per kilogram (mg/kg) in soil samples from 25 of these borings. According to ERM-West (1990), further investigation of 19 of these boring locations was not warranted because TPH concentrations were found to decrease with depth to below 1,000 mg/kg. Of these, TPH concentrations decreased to below laboratory detection limits in samples from nine borings. BTEX concentrations were detected in samples from five borings. According to ERM-West (1990), a determination of exact fuel types contained in soil samples was unsuccessful because of the diversity of fuel types historically stored at the site, as well as degradation of these fuels with time. Additionally, laboratory analyses were conducted for volatile aromatic hydrocarbons (EPA Method 8020) in JP-5 and F-76 fuel samples. According to ERM-West, the analyses indicated that the volatile aromatic hydrocarbon concentrations were low enough that they should not pose a risk to field personnel or be a significant problem in soils on site.

1.4.2 CTO 0010 Site Inspection

The SI completed under CTO 0010 was tailored to areas of concern identified in the preliminary assessment (PA). The following section summarizes the SI findings and characterization efforts within the Treatment Ponds Area.

Soil and groundwater samples collected in the treatment ponds area were analyzed for volatile organic compounds (VOCs) and semivolatile organic compounds (SVOCs); inorganic compounds; pesticides; polychlorinated biphenyls (PCBs); BTEX; and TPH. TPH concentrations in soil in the diesel range (F-76) were reported as high as 3,630 mg/kg with associated values in groundwater of 2.4 milligrams per liter (mg/L). Numerous SVOCs, indicative of heavier oils, were detected in some treatment ponds soil samples; however, these compounds were not detected in associated groundwater samples. The concentrations of benzene detected in the groundwater sample from monitoring well PRC #3 was above the maximum contaminated level (MCL) for this compound and above the DHS action levels. Also apparent, following the installation of monitoring well PRC #2, was the presence of floating hydrocarbons (bunker fuel) directly downgradient of existing Navy extraction wells.

As a result of the SI, the Treatment Ponds Area was recognized as having an impact on groundwater and possibly on San Francisco Bay. Two samples obtained in beach and tidal flats sediments near the

Treatment Ponds Area resulted in the detection of TPH in the diesel (F-76) and motor oil range at concentrations from 129 mg/kg to 4,710 mg/kg. Toluene, ethylbenzene, and xylene were detected in these sediment samples at concentrations well below water quality criteria for the protection of saltwater aquatic life or California applied action levels (AALs) in water for saltwater species, with the exception of toluene in one sample. These samples collected in beach sediments indicate that the movement of contaminants from the Treatment Ponds Area toward San Francisco Bay has occurred, but the extent and concentration of hydrocarbon constituents within the tidal flats sediments was not determined as a result of this investigation.

1.4.3 CTO 0143 Site Characterization

The Treatment Ponds Area characterization completed under CTO 0143 included the following:

- The drilling of 65 soil borings from which 102 discrete soil samples were obtained and analyzed for chemical constituents
- The analysis of 12 soil samples for physical and hydraulic properties
- The analysis of 16 soil samples for biochemical properties
- The installation of 42 monitoring wells and 10 piezometers from which 35 groundwater samples were obtained
- The installation of seven coreholes and the performance of in situ permeability (packer) tests in these coreholes
- The performance of five aquifer (pumping) tests
- The collection of 19 near-shore beach/sediment samples
- The monitoring of water levels and hydrocarbon thicknesses on four occasions between May 1992 and September 1993
- The performance of independent tidal surveys, including 11 different monitoring wells with simultaneous monitoring at the Point Molate fuel pier

The investigation was targeted at (1) assessing the nature and extent of hydrocarbons and other potential contaminants within the Treatment Ponds Area, (2) assessing the potential impact of these contaminants to San Francisco Bay, (3) assessing hydraulic and hydrogeologic parameters in both unconsolidated sediments within the water table aquifer and in underlying native materials including bedrock, (4) and evaluating interim remedial actions appropriate to the Treatment Ponds Area.

Samples from monitoring wells installed in the unconfined water table aquifer throughout the Treatment Ponds Area assessed the horizontal extent of aqueous phase constituents in groundwater. A deeper aquifer is not known to exist in this area. The bottom of the water table aquifer corresponds approximately to the uppermost occurrence of the bay mud. However, soil samples collected within the bay mud and other underlying units indicated that potential vertical migration of some hydrocarbons and constituents of hydrocarbons has occurred within these units, beneath the water table aquifer. The migration of hydrocarbons within these units is attributed to two methods of transport: (1) very slow advective transport within the upper few feet of the bay mud, and (2) to preferential movement in saturated alluvial paleochannels where they interconnect or have eroded into permeable horizons or discrete lenses within the colluvium.

The contaminants within the Treatment Ponds Area are predominantly fuels, constituents of these fuels, and some chlorinated solvents. Solvents detected at one discrete location included trichloroethene (TCE), tetrachlrorethene (PCE), and 1,2-dichloroethene (1,2-DCE). Fuel types present in soil, groundwater, or near-shore sediments are bunker fuel, motor oil, diesel (F-76), jet fuel (JP-5), and some gasoline. Constituents of these fuels, including volatile components such as BTEX, and semivolatile components such as 2-methylnapthalene, pyrene, chrysene, and phenanthrene, were also detected in soil, sediment, and groundwater samples. Sources of these fuels are primarily related to the former sump pond, which was located beneath the current treatment ponds. The sump pond was a disposal pit for various hydrocarbons including bunker fuel, spent or contaminated fuels, tank bottom sludges, and other liquid or solid wastes. Other sources of these fuels exist, and commingle with the hydrocarbon plumes which are migrating from the former sump pond. Upgradient sources of predominantly diesel and bunker fuel exist in the soil and are following pipeline bedding or other subsurface utility conduits. These upgradient sources are derived from historical pipeline leaks or fuel spills at the depot. An unexpected discovery encountered during the course of the investigation was the detection of JP-5 and lighter fuel constituents (BTEX), in a separate source area south of the Treatment Ponds Area, within Drum Lot No. 1. Diesel and JP-5 were detected as floating product at monitoring well MW11-22, within Drum Lot No. 1, located crossgradient to the Treatment Ponds Area. Diesel and JP-5 are migrating toward the southern end of the Treatment Ponds Area, and are probably mixing with the bunker fuel plume from this area, reducing the viscosity of the bunker fuel, and allowing it to migrate further south.

Other sources of fuels at the depot include residual hydrocarbons in the soil upgradient of the shoreline (at locations of historical spills or leaks) which may eventually migrate to the shoreline or

into San Francisco Bay. These residual hydrocarbons are related to historical spills or leaks which have occurred near tank or associated piping locations.

The fuel and other unknown compounds historically stored in drums in Drum Lot No. 1 may also be a source. If held in damaged or leaking containers, these fuels, and other potential contaminants, may have also migrated beneath Drum Lot No. 1, either toward the shoreline or the Treatment Ponds Area.

Bunker fuel was the most predominant contaminant detected in all media. It was detected in the northernmost soil boring, more than 800 feet north of the former sump pond, and about the same distance south of the former sump pond. It was also detected in beach sediment samples collected more than 900 feet north of the former sump pond. The highest concentrations and dominant distribution of bunker fuel in groundwater is within the proximity of the former sump pond; it has, however, become less viscous after mixing with lighter fuels and has migrated as far south as well MW11-19, about 800 feet south of the former sump pond.

Diesel was the second-most widely distributed and concentrated fuel detected within the Treatment Ponds Area. It was distributed mainly south of the Treatment Ponds Area, however, and occurred only as an isolated detection at one monitoring well, MW11-40, just outside the northeastern edge of the former sump pond. The distribution of diesel in groundwater suggests a primary source area to the south, probably originating in Drum Lot No. 1, and a secondary source along Diesel Road, probably within pipeline bedding located beneath this road.

The distribution of gasoline in groundwater was the third-most widespread fuel, and was similar to the distribution of BTEX in groundwater. The distribution of BTEX was similar: all constituents were predominantly distributed between wells MW11-19 (the southernmost monitoring well) and well MW11-21, the highest concentrations being detected at well MW11-21. This distribution pattern suggests a source of BTEX very close to well MW11-21, and perhaps just upgradient or cross gradient of well MW11-21, perhaps at well MW11-22. An immiscible phase, containing 55 percent JP-5 and 44 percent diesel, was detected at well MW11-22. This well was completed in an apparent underground (flowing) stream channel. The resulting migration of constituents detected in the groundwater at this location may be affecting groundwater quality in the Drum Lot No. 1 area; these constituents have migrated to wells MW11-21 and MW11-19 and may subsequently migrate directly toward San Francisco Bay. Insufficient data have been gathered for the area along the shoreline

between wells MW11-19 and MW11-21. This location will be among those shoreline locations targeted for subsequent investigation under CTO 0248.

The detection of gasoline in soil or groundwater is in general suspect, as no current sources exist at NFD Point Molate for gasoline. Its detection may be the result of false interpretations caused by interference from other (degraded) fuels. If present, however, its detection may be related to compounds previously stored in Drum Lot No. 1, or the leakage from fuel lines which previously transported aviation and motor gasoline from Tanks 21 through 24, on the northernmost extent of the facility, to Valve Box 26, through pipelines long the shoreline, and finally to the causeway at the fuel pier.

The distribution and concentration of aqueous phase constituents, including benzene and other VOCs and SVOCs, is limited near or directly downgradient of the treatment ponds and former sump pond. Even groundwater sampled beneath a 0.5-foot immiscible phase of bunker fuel at well MW11-92 (PRC #2) did not contain detectable concentrations of BTEX or SVOCs.

The nondetection of aqueous phase constituents directly downgradient of the former sump pond (along the shoreline) suggests that the bunker fuel associated with this area is not a source of aqueous phase constituents in the groundwater. Bunker fuel, present as immiscible phases in near-shore monitoring wells and also present in percent concentrations in near shore sediments, is not significantly affecting groundwater quality in this area, and subsequently in San Francisco Bay. Where diesel and bunker fuel are mixed, however, some semivolatile constituents, such as 2-methylnaphthalene, are detected in groundwater. The importance and potential impact of specific semivolatile constituents is worthy of further investigation as they are bioaccumulative.

The sediments in the proximity of wells MW11-25, MW11-26, MW11-27, MW11-28 and MW11-14 are interpreted as alluvial channel deposits. The detection of many fuels, aqueous phase constituents, and the thickest immiscible phases of diesel and bunker fuels occurs along the apparent trend of this channel. This alluvial channel serves as a preferential migration pathway, trending directly toward the sandbags near wells MW11-15 and MW11-16. The trend of this alluvial channel is also parallel to numerous pipelines that change direction at Bay Road and Burma Road toward Diesel Road. It is likely that the pipeline bedding equally serves as a conduit or as another preferential migration pathway.

The area within the vicinity of the alluvial channel is therefore of primary concern, and will be a focal point for interim corrective actions.

Aquifer tests conducted in the water table aquifer resulted in widely ranging, and somewhat unreliable, values of hydraulic conductivity. These tests did, however, provide useful hydrologic data. Hydraulic conductivity values were generally much greater than expected for subsurface materials exhibiting such varying size ranges. Sustainable yields within this highly heterogeneous aquifer were obtainable. Sustainable pump rates within the artificial fill varied from 1.25 to almost 7 gallons per minute (gpm). Response to pumping was reflected very well in observation wells; increased drawdown in observation wells generally corresponded to shorter distances from the pumping well. The radius of influence from pumping wells was exhibited up to 20 feet from the pumping well, and in some cases up to 60 feet. A pumping test conducted at an existing extraction well resulted in the accumulation and eventual discharge of some bunker fuel into the oil recovery system after 24 hours of continuous pumping. At the end of this pump test, it was possible to pump 2- to 4-gallon surges of bunker fuel within several hours of each other. This indicates that these wells may be used to manipulate the local hydraulic gradient, and subsequently to enhance or induce the flow of oil toward the extraction well.

Although many wells were tidally influenced from San Francisco Bay, enhanced salt water intrusion due to pumping was not evident even after discharge of about 10,000 gallons at well MW11-27, located 175 feet from the bay. Sodium (Na) and chloride (Cl^-) concentrations measured in groundwater samples did, however, increase proportionally with proximity, particularly within 200 feet, of the bay. However, not all monitoring wells exhibiting the greatest tidal influence also exhibited the highest salinity or $NaCl^-$ concentrations. Preferential flow pathways within the heterogeneous fill material may be responsible for this discrepancy.

As a result of the Treatment Ponds Area characterization, the significance of bunker fuel in the vicinity of the former sump pond and in the near-shore monitoring wells has been deemphasized. The significance of areas contaminated with bunker fuel and diesel mixtures (along Diesel Road and at the southern end of the Treatment Ponds Area), and other areas exhibiting contamination from lighter fuels, such as JP-5 (Drum Lot No. 1), has been emphasized. The impact of groundwater contamination in the vicinity of these fuel plumes has resulted in the additional characterization and the interim remedial design (source control measures) included in CTO 0248. Areas contaminated

with bunker fuel and these lighter fuels will be evaluated under a long-term groundwater monitoring program included in CTO 0248.

1.5 HYDROGEOLOGIC SETTING

Point Molate is located withiin the groundwater basin designated as the Alameda Bay Plain Basin Division of Water Resources (DWR) (DWR 1990). This sub-basin is included within the larger (680 square miles) groundwater basin located to the east and south of the San Francisco Bay, covering parts of the Santa Clara Valley and Alameda, Contra Costa, San Mateo, and Santa Clara Counties (DWR 1980). The basin is drained by the Guadelupe River and by the Alameda, Coyote, Redwood, and San Francisquito Creeks (ERM-West 1990).

ERM-West did not encounter a shallow water table aquifer while drilling soil borings during its investigation in 1990. It should be noted that this investigation was completed primarily in steep hillside areas at NFD Point Molate. Water was encountered in only six of 81 borings drilled. The occurrence of water in one boring was attributed to stream drainage in a valley; water in a second was attributed to the proximity of fill gravel adjacent to a culvert; water in a third was attributed to leakage from a water line. Water in the remaining three soil borings was attributed to isolated water-bearing units and not to a consistent shallow aquifer.

The Treatment Ponds Area investigation (CTO 0143), however, was located in flat-lying, near-shore unconsolidated sediments. A shallow unconfined aquifer was encountered during the investigation. Water-bearing units within the shallow (water-table) aquifer included alluvium, intertidal sediment, and artificial fill.

The thickness of the saturated sediments generally corresponds to the depth to the top of the bay mud and ranged from 9 to 14 feet, but averaged about 9 to 10 feet. Depth to water below ground surface ranged from 4.4 to 12.4 feet.

The general groundwater flow direction in the Treatment Ponds Area is from the northeast to the southwest (from the steep hillside areas toward the shoreline). A water-table mound occurs in the area of the treatment ponds. An unusually steep hydraulic gradient directly northwest of the ponds is attributed to the subsurface cutoff wall that was installed in the 1940s. Groundwater flows radially in the downgradient direction from the treatment ponds. The radial flow directions can be attributed to

the pooling of groundwater upgradient of the cutoff wall and from direct hydraulic communication to the unlined ponds.

A groundwater divide exists at the southern end of Drum Lot No. 1 (near the fuel pier). The divide is attributable to bedrock outcrops and subcrops through this portion of the facility. Bedrock at NFD Point Molate is not considered a hydrostratigraphic unit. The movement of water through bedrock is possible via very poor or negligable matrix permability, but more likely through secondary (tectonic) fractures or well-developed joint system. Water has not been encountered, however, where the bedrock subcrop and outcrops exist, indicating that the groundwater encountered along other near-shore areas is attributable to hydraulic communication with the bay and recharge from the hillside ravines.

As a result of this groundwater divide, the discussion regarding the distribution of contaminants in groundwater (Section 5.0) will reference the near-shore unconfined aquifer either north or south of the divide. The area north of the divide has been designated as Area 11, and monitoring wells within this area are designated with an 11 followed by the chronological well number. Similarly, monitoring wells south of the divide are designated as Area 10 wells.

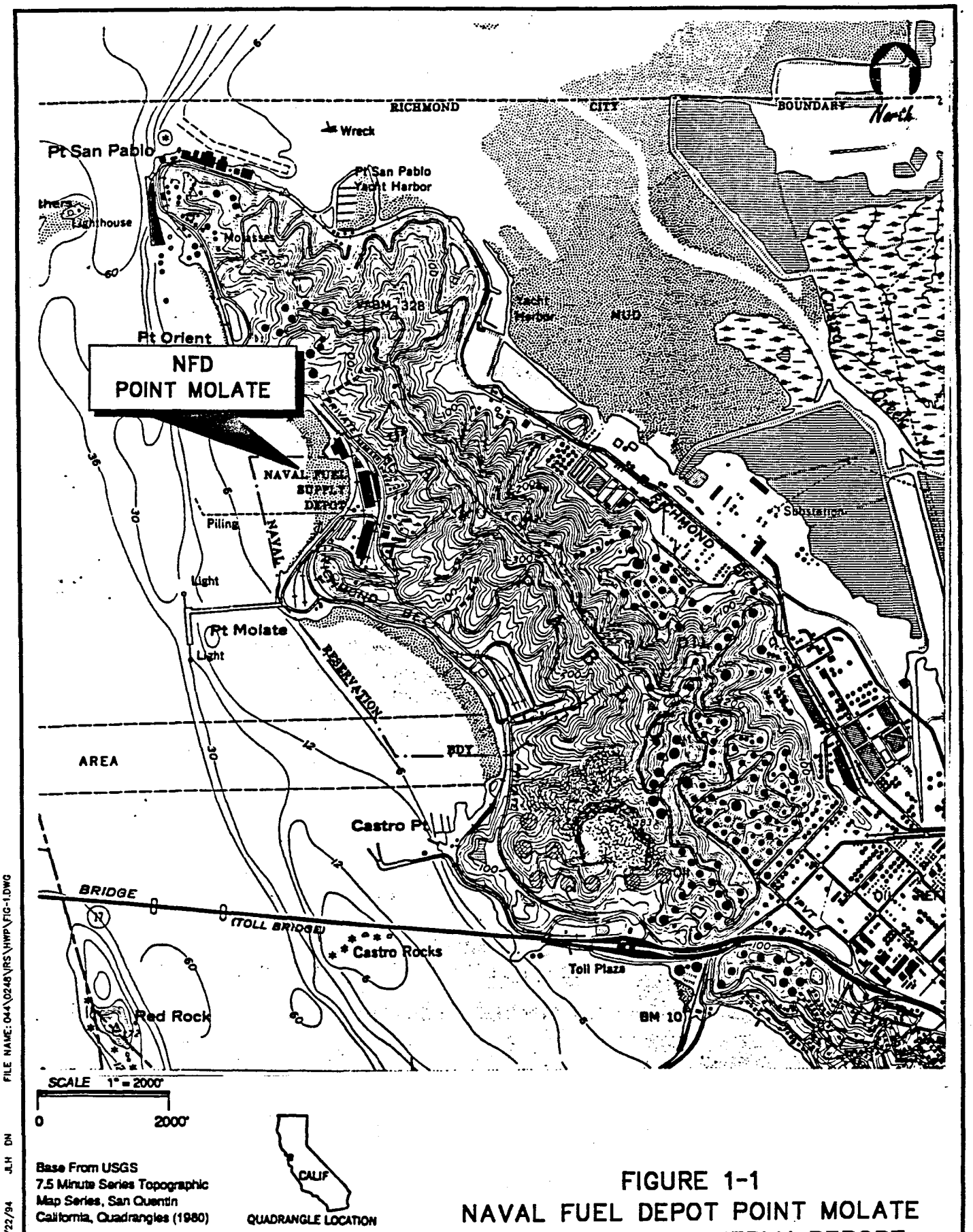

Base From USGS
7.5 Minute Series Topographic
Map Series, San Quentin
California, Quadrangles (1980)

(ADAPTED FROM ERM-WEST, 1990)

FIGURE 1-1
NAVAL FUEL DEPOT POINT MOLATE
MARCH 1994 QUARTERLY REPORT
FACILITY LOCATION MAP

DATE: 06/22/94 JLH DN FILE NAME: 044\0248\VRS\HWP\FIG-1.DWG

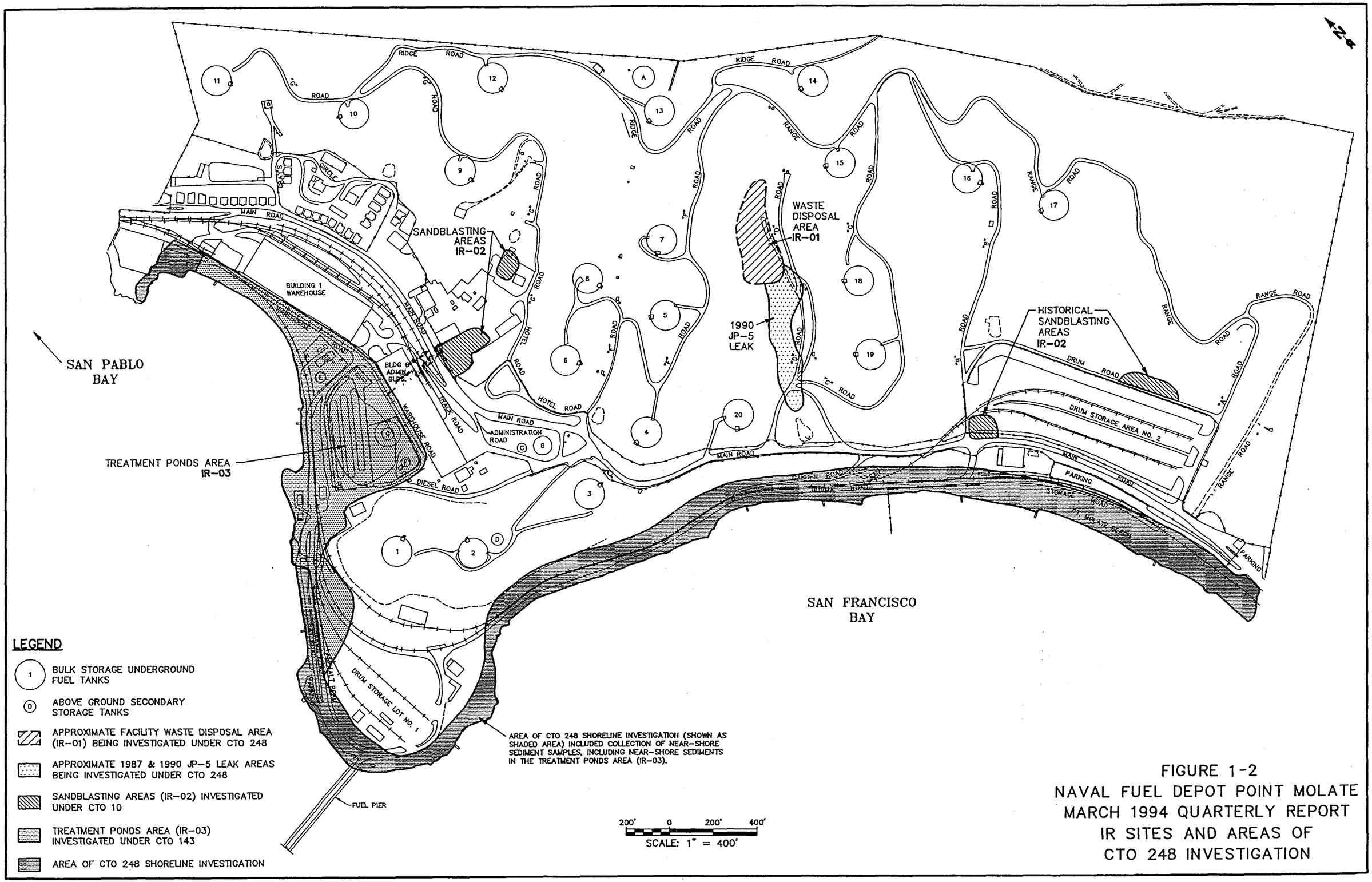

FIGURE 1-2
NAVAL FUEL DEPOT POINT MOLATE
MARCH 1994 QUARTERLY REPORT
IR SITES AND AREAS OF
CTO 248 INVESTIGATION

2.0 MONITORING WELL SELECTION

The selection of monitoring wells for the quarterly sampling program at NFD Point Molate was based on historical (baseline) data obtained during CTOs 010 and 0143 and geographic distinctions. Sampling frequency for the first year of the program was chosen as quarterly based on initial negotiation of CTO 0248 with the California Regional Water Quality Control Board (RWQCB). The quarterly monitoring wells are primarily located in the near-shore vicinity and spaced such that adequate coverage along the entire facility's boundary with San Francisco Bay is provided. Numerous potential hydrocarbon sources exist across the facility, which may migrate via groundwater or surface water along a regional hydraulic gradient toward San Francisco Bay. Data obtained from groundwater sampling will be used to assess the nature and extent of contamination, the potential for contaminants to migrate into San Francisco Bay, and potential sources for contaminants. The shoreline well network will also provide a geographic and analytical basis for decisions regarding remedial actions.

Monitoring wells that were included in the March 1994 sampling program, including those associated with the waste disposal area (Area 2), are shown on Figure 2-1. Monitoring wells associated with the waste disposal area are not included in the quarterly sampling program. Area 11 monitoring wells are located north of the groundwater divide; Area 10 wells are located south of the groundwater divide. The northernmost area along the shoreline is designated as Area 12; however, no monitoring wells have been installed in this relatively small section of the facility's property. Area 12 is characterized by bedrock subcrops and outcrops, and limited groundwater is expected to exist here. One soil boring was drilled in Area 12 under CTO 0248 encountering tight colluvium, weathered bedrock, and no water to a depth of 15 feet.

Eleven Area 10, nine previous Area 11, and four newly installed Area 11 (24 total) monitoring wells were sampled (or attempted to be sampled) during the first quarter event of March 1994. Since all Area 10 wells are newly installed and no baseline data existed for them, all were included in the first quarter event. Specific conditions or resulting analyses will require that some be included or deleted from subsequent quarterly events. These will be discussed further in Section 6.0.

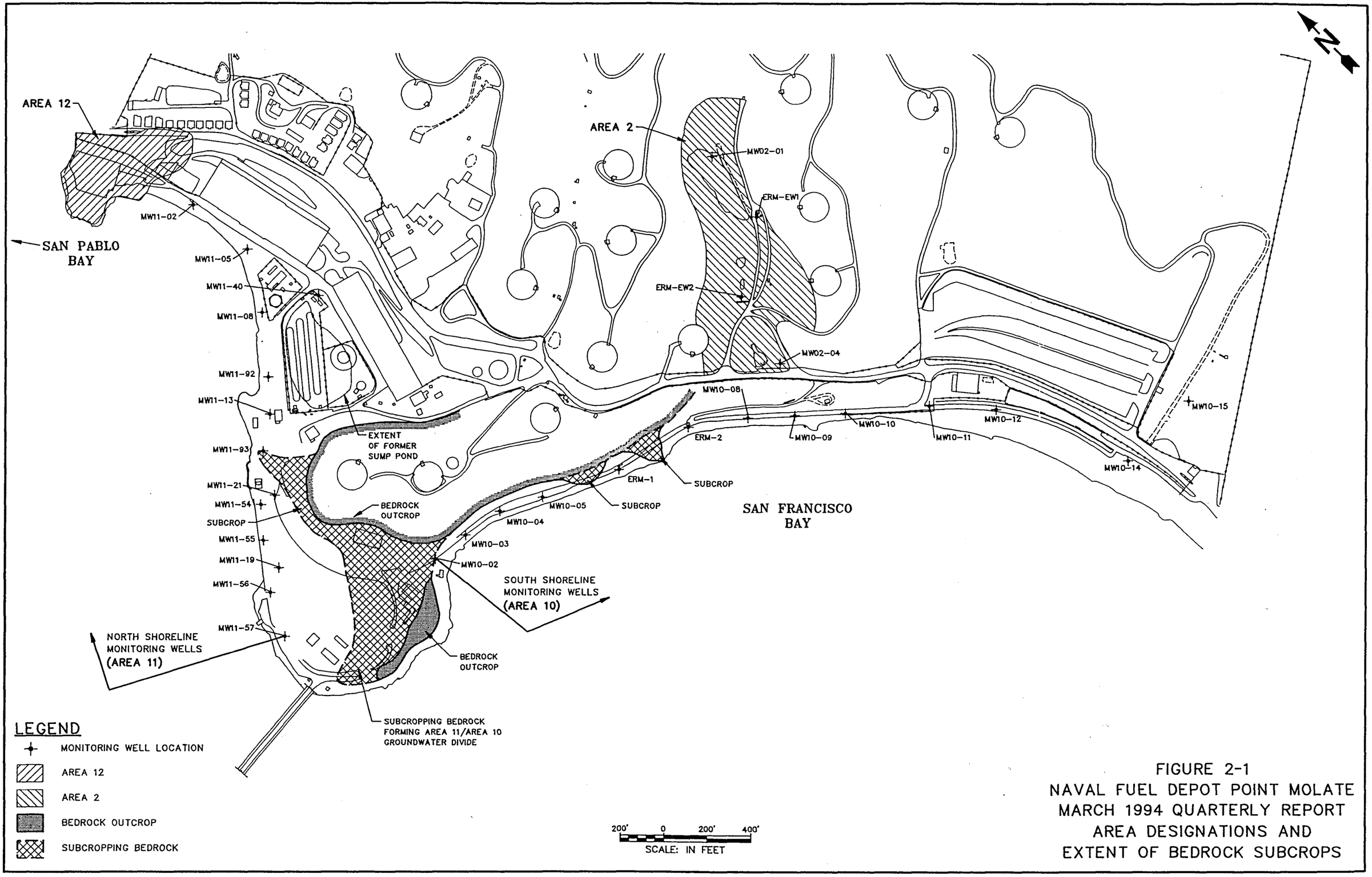

FIGURE 2-1
NAVAL FUEL DEPOT POINT MOLATE
MARCH 1994 QUARTERLY REPORT
AREA DESIGNATIONS AND
EXTENT OF BEDROCK SUBCROPS

3.0 FIELD AND LABORATORY METHODS AND PROCEDURES

This section describes field and laboratory methods implemented during the March 1994 quarterly groundwater sampling event. Section 3.1 describes groundwater sampling, followed by a discussion of water level and product thickness measurements in Section 3.2. Section 3.3 discusses laboratory methods used to conduct specific analyses.

3.1 GROUNDWATER SAMPLING

A total of 24 groundwater monitoring wells were sampled during the March 1994 sampling event. This sampling event was the first of four quarterly events planned to evaluate groundwater quality from a network of wells along the shoreline. Included in the March 1994 sampling event were 13 wells installed in February and March 1994 under Task 2 of CTO 0248, nine wells installed in 1992 under CTO 0143, and two wells installed by ERM-West in 1990. A description of monitoring well development procedures and groundwater sample collection methods are discussed in the following paragraphs. Groundwater sampling was conducted in accordance with the Final Field Work Plan/Sampling Analysis Plan (FWP/SAP) (PRC 1994). Any modifications to procedures discussed in the FWP/SAP are stated below.

3.1.1 Monitoring Well Development and Presampling Purging

All groundwater monitoring wells installed under CT0 0248 Task 2 were developed prior to sampling. In addition, wells previously installed under CTO 0143 and by ERM-West and included in the groundwater monitoring network were redeveloped. All wells were also purged prior to collection of groundwater samples.

The newly installed monitoring wells were developed to maximize the flow of formation water into the well casing, remove any fluids introduced during drilling, allow the groundwater and potential contaminants to equilibrate following the disturbance during drilling, and to create representative aquifer conditions near the monitoring well prior to sampling. Various established development techniques including pumping, surging, and bailing were used. Water generated during development was containerized temporarily and then disposed in the facility's oil recovery system.

Development of the newly installed monitoring wells occurred approximately 2 weeks after well installation. Monitoring well installation records are included as Appendix E. A minimum of five casing and filter pack volumes were removed during development. Groundwater quality parameters were measured at all stages of well development. These parameters included pH, temperature, specific conductivity, turbidity, and salinity. Total dissolved solids (TDS) were derived from specific conductivity values. The total volume discharged, time, rate of discharge, and visual characteristics of the water were also noted. Well development was considered complete when a minimum of five casing and filter pack volumes were removed and stability of parameters was achieved.

All monitoring wells installed in Area 10 were initially developed using a hand-operated "Guzzler" pump that operates on a siphon principle. Dedicated 3/4-inch polyvinyl chloride (PVC) drop pipe was installed in each 4-inch monitoring well to prevent cross contamination. This drop pipe was then connected to the pump for well development purposes.

Due to the nature of subsurface materials, several of the shoreline wells exhibited very low water yields and dewatered prior to removal of five casing and filter pack volumes. Well development on these wells was completed using a 4-inch-diameter by 4-foot-long stainless-steel bailer. The surging action of the bailer was used to promote development of the wells. Some of these wells dewatered after removal of only 5 to 20 gallons of water and required returning approximately every 24 to 36 hours to repeat the development process over several days to 3 weeks.

Wells previously installed under CTO 0143 and by ERM-West were redeveloped using the stainless-steel bailer or a 4-inch submersible pump. A minimum of three well casing volumes was removed. Completion of well development was also based on stability of measured parameters.

Prior to groundwater sampling, three well casing volumes were removed from all wells included in the sampling program. If a well dewatered prior to removal of three casing volumes, then sampling commenced after recharge.

Development procedures for each well were documented in the field on a well development data sheet. These data sheets are included in Appendix F.

3.1.2 Groundwater Sample Collection

This section describes groundwater sampling procedures implemented under Task 4. In general, procedures followed those stated in the FWP/SAP (PRC 1994) and presented below.

Wells were purged prior to collection of groundwater samples, and groundwater quality parameters (pH, temperature, specific conductivity, turbidity, and salinity) were collected as an indication of the groundwater stability. A minimum of three well casing volumes was purged prior to sampling. Information including water levels, photoionization detector (PID) readings at the well head, purge volumes, and groundwater quality was recorded on the groundwater sampling data sheets. These data sheets are presented in Appendix G. A list of groundwater samples and analytical parameters is presented in Table 3-1. The following describes groundwater sample collection procedures:

- The presence of light or dense (floating or sinking) immiscible phases in all wells was monitored with an interface probe. If an immiscible phase was present, the thickness of the product was determined using the interface probe. If a sample of the product was required, a disposable Teflon bailer was lowered into the well. The bailer was allowed to fill slowly and as much of the immiscible phase captured as possible. A sample of the immiscible phase was decanted into a sample container for analysis.

- The water level and total depth within the well casing was measured, and casing volume was calculated. The casing volume of the well was calculated using the water level and total depth measurements (cross-sectional area times h, where h equals the total depth of the well minus the depth to water).

- If an immiscible phase was not present, the well was purged to obtain a representative water sample. Wells were purged with a bailer, hand operated "Guzzler" pump, or submersible pump. Prior to sample collection, three casing volumes of water was purged from the well. The pH, specific conductivity, temperature, turbidity, and salinity of the purged water was measured and recorded regularly throughout the purging process. If, after removing three casing volumes, these parameters did not stabilize, purging was continued until stabilization was achieved. In all wells where floating hydrocarbons were not present, the water sample was collected from the top of the water column if there was adequate recharge. The water in the bailer was visually inspected for any oily sheen or oil globules.

- If an immiscible phase (floating hydrocarbon layer) was present, dedicated presampling equipment was installed in the well. This procedure is discussed in subsection 3.1.2.1.

- The bottles used to collect samples for analysis of VOCs and TPH purgeable (TPH-P) were filled first. The sample bottles were maintained in a cool environment prior to sample collection to minimize the loss of volatile components. After collection of water, the bottle was sealed with a Teflon®-lined cap, the bottle was inverted and

tapped lightly, and the presence of air bubbles visually inspected. If any head space was present, the bottles were refilled accordingly. Containers for TPH extractable (TPH-E) and SVOC analyses were then filled. A small amount of head space was acceptable for TPH-E and SVOC samples. The sample bottles for other analytes and general water quality parameters were filled last.

Due to the presence of hydrocarbons in the groundwater in several wells, modifications to the procedures proposed in the final FWP/SAP were required. This primarily involved modifications to proposed sampling methods as well as presampling preparation of specific monitoring wells. Modifications to proposed sampling methods, hydrocarbon, and quality assurance/quality control (QA/QC) sample collections, as well as field documentation procedures, are discussed in the following subsections.

3.1.2.1 Installation of Dedicated Presampling Equipment

Several wells included in the quarterly groundwater monitoring network contained an immiscible hydrocarbon phase. This was determined by routine monitoring with an interface probe to measure the thickness of the product layer. The following procedures were implemented in these wells in order to sample the groundwater beneath the floating hydrocarbon layer.

Using a disposable bailer, an attempt was made to remove as much of the floating product as possible. If required, a sample of the immiscible phase was collected for analysis. After removal of the immiscible phase, a 2-inch inner diameter (ID) PVC pipe was inserted into the existing 4-inch ID well. The leading end of this 2-inch PVC pipe was temporarily capped and absorbent material was inserted inside the pipe and adjacent to the cap to prevent hydrocarbons from entering the drop pipe. The 2-inch pipe was inserted rapidly through the immiscible layer and into the groundwater below. Following insertion of the 2-inch pipe, a weighted measuring tape or probe was lowered through the insert pipe to remove the end cap and absorbent material. The end cap and absorbent material was removed with attached monofilament nylon line and water levels were allowed to equilibrate inside the 2-inch PVC pipe prior to sampling. This dedicated pipe isolated the immiscible phase and allowed groundwater to be purged and sampled through the insert pipe with a 2-inch submersible pump or a 2-inch bailer. The dedicated PVC pipe was left in place for future sampling events.

3.1.2.2 Grundfos® Submersible Sampling Pump

Initially, a Grundfos® 2-inch submersible pump was used to purge and sample groundwater from wells. Samples to be submitted for volatile analyses, however, were collected before all other analytical parameters with a 2-inch ID Teflon® bailer. The presence of oil globules in groundwater at some well locations made it difficult to isolate groundwater and oil prior to sampling. The dedicated drop pipe at these locations could not isolate globules that were entrained in the water, but worked well where a floating immiscible phase was present. Field personnel determined that cross contamination could occur with continued use of the Grundfos® pump for collection of groundwater samples. Therefore, use of the Grundfos® submersible pump was discontinued for sampling after the first five wells. The Grundfos® pump was used for purging some wells, and a 2-inch Teflon® bailer or 2-inch ID disposable bailers were used for collection of subsequent groundwater samples. A list of purging and sampling equipment used for each well is shown in Table 3-2.

The Grundfos® pump and discharge hose was decontaminated using the following procedure. First, the exterior surface of the pump and all discharge hose used downhole were steam-cleaned with a high pressure steam cleaner. A hot water mixture containing Alconox or Liquinox was contained in a 55- gallon steel drum. The pump was lowered in the hot water mixture and agitated. The pump was then operated at a normal discharge rate until the detergent rinse was thoroughly circulated throughout the entire length of discharge hose. Clean tap water was then circulated through the pump and hose until all discharge water was clear. At least 50 to 100 gallons of water was generally circulated.

If oily conditions were encountered when using the Grundfos® pump, hexane was circulated through the pump and discharge hose. This hexane rinse was completed prior to decontamination with detergent as described above. The hexane was contained inside a 3-foot section of PVC casing with a sealed end cap. Approximately 5 gallons of hexane was circulated.

3.1.2.3 Disposable and Nondisposable Bailers

Both disposable and nondisposable Teflon® bailers were used to purge and sample some wells. Disposable Teflon® bailers were used to remove immiscible product layers from wells and also to collect fuel samples. A nondisposable Teflon® bailer was used to collect volatile samples from wells initially purged with the Grundfos® submersible pump, and also to purge and sample for all analytical parameters from some wells.

Immiscible phases in the groundwater, in particular oil globules, necessitated the change in sampling procedure from sampling with the Grundfos® submersible pump to Teflon® bailers. A 2-inch ID Teflon® bailer, which could be thoroughly decontaminated, or dedicated disposable bailers provided less opportunity for cross contamination between monitoring wells.

Decontamination of the nondisposable Teflon® bailer was achieved by completely disassembling the bailer. All parts were immersed and individually scrubbed with a bailer brush in a 5-gallon bucket containing Alconox or Liquinox detergent solution. The bailer was then thoroughly rinsed, followed by a double rinse with deionized (DI) water and allowed to air dry. If oily conditions were encountered, the Teflon® bailer was first rinsed with hexane and steam cleaned prior to washing. Decontamination of disposable bailers was not necessary.

Disposable bailers were used to purge and sample the majority of monitoring wells. These 2-inch ID Teflon® bailers were disposed of after use.

3.1.2.4 Dissolved Metals Collection Sample

A peristaltic pump was used to filter groundwater samples for dissolved metals analyses. Samples were collected in unpreserved, 1-liter (L) polyethylene bottles. After sampling was completed at each well, the samples were returned to a central location and transferred via the peristaltic pump and a 0.45-micron filter to a 1-L polyethylene bottle preserved with nitric acid (HNO_3). Samples were then stored in a refrigerator until shipment.

3.1.2.5 Quality Assurance/Quality Control Sample Collection

QA/QC samples are required under each quarterly groundwater sampling event to establish representativeness of the resulting data. QA/QC samples included duplicates, equipment blanks, and trip blanks. Table 3-3 lists all QA/QC samples collected during the March 1994 quarterly sampling event. The following describes specific QA/QC samples collected.

Duplicates

Four duplicate groundwater samples were collected. Selection of wells for duplicate sampling was based on well locations with known contamination in Areas 10 or 11. Duplicate samples were collected from two wells with known contamination in the Treatment Ponds Area, MW11-92 (duplicate MW11-95) and MW11-54 (duplicate MW11-96). The remaining duplicate samples were collected from two Area 10 wells, MW10-04 (duplicate MW10-97) and MW10-09 (duplicate MW10-98). Duplicates were submitted for the same analytical parameters as the original sample.

The collection of duplicate groundwater samples is based on equal partitioning of the water from the source (bailer or pump discharge) into the sample container. For example, duplicate samples being analyzed for aromatic volatiles were collected from a bailer having adequate water to fill both sample containers. Duplicates were submitted as "blind" samples and were used to assess the reproducibility of laboratory analyses of samples.

Matrix Spike/Matrix Spike Duplicate (MS/MSD)

Two MS/MSD samples were collected as part of the Task 4 quarterly sampling effort. The MS/MSD samples were used for QC of laboratory analytical procedures. Although the spiking of samples is an internal laboratory procedure, the laboratory typically requires additional volumes of water for this procedure. For a MS/MSD in a water matrix, triplicate volumes were required for each analyte. MS/MSD samples were collected from Area 11 wells where sufficient groundwater could be obtained (MW11-02 and MW11-54).

Equipment Blanks

Three equipment blanks were collected to confirm that sampling equipment was properly decontaminated. Equipment blanks were obtained by pouring laboratory grade DI water through the sampling equipment following routine decontamination procedures. The DI water was collected in appropriate sample containers for analysis. Equipment blanks were submitted as "blind" samples.

Due to modifications in sampling procedures, only three equipment blanks were collected during the March 1994 groundwater sampling event. Two equipment blank samples were collected from the sampling equipment prior to any sampling activities. Sample EB00-01 was collected from the

Grundfos® submersible pump and sample EB00-02 was collected from the 2-inch ID Teflon® bailer. Sample EB11-01 was collected from the 2-inch Teflon® bailer after collecting volatile samples from Area 11 wells and before proceeding to Area 10.

No additional equipment blanks were collected due to the change in sampling protocol, which involved using disposable sampling equipment. As discussed above, the presence of oil globules in several wells necessitated the use of dedicated disposable bailers to purge and sample most monitoring wells. The analytical results of equipment blank samples is discussed in Section 5.7.

Trip Blanks

Seven trip blanks were collected to confirm that samples were not contaminated during either collection, on-site storage, or shipment to the laboratory. One trip blank was included per sample shipment and consisted of organic-free water in two 40-milliliter (mL) vials. Trip blanks were prepared by the laboratory and were analyzed for the same volatile constituents as groundwater samples.

3.1.2.6 Sample Handling and Shipment

In general, the methods and procedures used for sample handling and shipment followed those outlined in the final FWP/SAP. Methods described include assigning sample numbers, labeling sample containers, documenting field procedures.

Sample containerization and preservation procedures also followed those outlined in the FWP/SAP. All groundwater samples were properly containerized and packaged to maintain sample integrity and chain of custody during delivery to the analytical laboratory.

The final FWP/SAP describes and has examples of field labels and forms used during Task 4 quarterly groundwater sampling. In addition to a daily field log, well development data sheets and groundwater sampling data sheets were completed for each monitoring well. These data sheets are included as Appendices F and G of this report.

3.1.2.7 Hydrocarbon Sample Collection

Several groundwater monitoring wells included in the Task 4 quarterly sampling network contained an immiscible hydrocarbon phase. Samples of this immiscible phase were collected to identify fuel types and constituents in the fuel. This allowed comparison between constituents in the fuel samples and constituents, which may also be present as an aqueous phase in the groundwater at the facility. This following describes the methods used to collect floating hydrocarbons from groundwater monitoring wells.

The presence of an immiscible phase was determined by lowering an interface probe into wells and measuring product thickness. Hydrocarbon samples were collected at specific monitoring wells, particularly those characteristic of specific fuel types of mixtures. These samples were collected prior to purging and collection of groundwater samples.

Hydrocarbon samples were collected using two methods: a 2-inch disposable Teflon® bailer or 40mL glass volatile organic analysis (VOA) vials. Disposable Teflon® bailers were lowered into the well to collect the immiscible layer floating on groundwater. Upon retrieval from the well, the hydrocarbon sample was then dispensed into two 40mL glass VOA vials using a disposable Teflon® stopcock inserted into the bottom of the bailer. This prevented water from mixing with the hydrocarbon sample.

Some hydrocarbon samples were collected directly into 40mL glass vials by lowering them directly into the well. The glass vial was lowered and retrieved from the well with monofilament nylon line. All hydrocarbon samples were stored in a refrigerator prior to shipment to the laboratory.

3.2 WATER LEVEL AND PRODUCT THICKNESS MEASUREMENTS

The following sections describe procedures used to obtain water level and product thickness measurements as part of Task 4 quarterly groundwater sampling. Water level trends and results of product thickness measurements are discussed in Section 4.0.

3.2.1 Water Level Measurement

Water level measurements were collected from all wells and piezometers installed at NFD Point Molate. This includes wells installed in February and March 1994 under CTO 0248 Task 2 (shoreline) and Task 3 (disposal area) investigations, wells and piezometers installed in 1992 under CTO 0143 (Treatment Ponds Area), and wells installed by ERM-West in 1990. The measurements were obtained on May 2 and 3, 1994 after the first round of quarterly sampling was completed.

The following procedures were used to collect water level data.

- Remove well cap and wait for the water level to adjust to atmospheric pressure.
- Measure the vertical distance from the water surface to the surveyed reference point (the top of the well casing) with a Solinst water level indicator.
- Record the following information in a field log book: well number, date, time, reference point measured to, and measured depth to water.

Results of water level measurements are presented in Section 4.0.

3.2.2 Product Thickness Measurement

Several groundwater monitoring wells at NFD Point Molate contain immiscible phases (floating hydrocarbon layer). The thickness of the immiscible phase was measured with an interface probe. The depth to product and the depth to water was measured. From these measurements, the product thickness was determined. This product thickness data were used to depict the extent of the hydrocarbon plumes as presented in Section 4.0 (Figure 4-1).

3.3 ANALYTICAL METHODOLOGIES

The analytical methods used to analyze groundwater at NFD Point Molate include Contract Laboratory Program (CLP) VOCs, CLP SVOCs, CLP PCBs, CLP Metals (dissolved and total), and EPA Method (modified) 8015 (TPH-P and TPH-E), EPA Method 300.0 (major anions), EPA 9060 (total organic carbon [TOC]), EPA Method 365 (total phosphorous and ortho-P-phosphorous), EPA Method 300.0 (nitrate/nitrite), EPA Method 405.1 (biological oxygen demand [BOD]), ASTM D341

(viscosity), ASTM D550 (specific gravity) and EPA Method 6010 (organic and total lead). Microbial plate count was analyzed using Standard Method (SM) 9215.

All of these methods can be found in the following documents:

- Statement of Work (SOW) for Organic Analysis (EPA 1990a)
- SOW for Inorganic Analysis (EPA 1990b)
- Test Methods for Evaluating Solid Wastes (EPA 1986)
- State of California (CA) Leaking Underground Fuel Tank (LUFT), Field Manual (State Water Resources Control Board [SWRCB] 1989)
- Methods for Chemical Analysis of Water and Wastes (EPA 1983)
- Standard Method for the Examination of Water and Wastewater (Greenberg and others 1992)

The following sections briefly discuss each method.

3.3.1 Total Petroleum Hydrocarbons

TPH-Ps were analyzed following the procedure described in CA LUFT field manual modification of EPA Method 8015 (SWRCB 1989), which detects purgeable compounds by gas chromatography (GC) analysis. Purgeable compounds were determined by the head-space method, which required 20mL in a 40mL septum vial. This vial was then heated and a sample of the head space gas was injected into the GC equipped with a flame ionization detector (FID) for analyses.

TPH-Es were analyzed following the methods presented in CA LUFT field manual modification of EPA Method 8015 (SWRCB 1989). This method detects extractable compounds (JP-5, diesel, kerosene, and motor oil) by GC/FID analysis. Groundwater samples were extracted with methylene chloride and/or hexane by EPA Method 3510. One liter of sample was extracted down to a 1mL analytical volume and the extract was injected onto the GC.

3.3.2 Volatiles

VOCs were analyzed in groundwater to assess levels of contamination at the site. CLP methods and EPA Methods 8010 and 8020 were used. The QC requirements specified in the associated methods

were met. The CLP method was performed by bubbling an inert gas through 5mL of sample. The purgeable compounds are transferred from the aqueous phase to the vapor phase. The vapor phase is then sorbed to a trap. An inert gas desorbs the compounds onto a GC column when the purgeable compounds separate and are detected with a mass spectrometer. The analysis was performed by using gas chromatography/mass spectrometry (GC/MS) for qualification and quantification of the volatile compounds. In addition to the target compounds, a library search was performed for any tentatively identified compounds (TICs) present in the sample. For EPA methods 8010 and 8020, GC techniques were used on selected samples.

3.3.3 Semivolatiles

SVOCs were analyzed in groundwater using CLP methods. Associated QC requirements, specified in Exhibit E of the CLP SOW for Organics, were met. A 1L sample was extracted with methylene chloride and concentrated down to 1 mL using a liquid-liquid extractor. The methylene chloride extract is dried with sodium sulfate and subjected to a gel permeation cleanup (GPC). The analysis was performed using GC/MS for qualification and quantification of SVOCs. In addition to the target compounds, a library search was conducted for any TICs present in the sample.

3.3.4 Pesticides/PCBs

Organochlorine (OC) pesticides and PCBs were analyzed in specific groundwater samples included in the March 1994 sampling program. CLP methods were used and the QC requirements specified in Exhibit E of the CLP SOW for organics were met. A 1L sample spiked with a surrogate solution was extracted with methylene chloride and concentrated down to 1 mL using a liquid-liquid extraction technique. The methylene chloride extraction is dried with sodium sulfate, concentrated, and cleaned up by GPC, if necessary. These extracts were then cleaned up using a Florisil cleanup method. The extracts were then analyzed by GC.

3.3.5 Organic Lead

Organic lead was analyzed according to the procedures described in Appendix D of the LUFT manual (SWRCB 1989).

3.3.6 Metals

Metals were analyzed in groundwater by inductively coupled plasma (ICP) atomic emission spectrometry, graphite furnace atomic absorption (GFAA), and cold vapor atomic absorption (CVAA) methods, which include all the analytes in the CLP Target Analyte List (TAL). The QC requirements specified in Exhibit E of the CLP SOW for Inorganics (EPA 1990b) were met. The samples were prepared and analyzed according to the methods specified in Exhibit D of the Inorganic SOW (EPA 1990b).

3.3.7 Inorganic Parameters

Various inorganic parameters were analyzed in groundwater at NFD Point Molate. These parameters include major anions, nitrate-nitrite, TOC, total and ortho-P-phosphorous and were analyzed by Methods EPA 300.0, SW-846 9060, and EPA 365, respectively. The QC requirements specified in the appropriate methods were met.

3.3.8 Biochemical Analyses

Microbial plate count (SM 9215) and BOD (EPA 425.1) were analyzed on select groundwater samples. The QC requirement specified in the appropriate methods were met.

3.3.9 Hydrocarbon Analyses

Fuel types and chemical constituents were analyzed on floating fuel found in the following five wells: MW11-93, MW11-92, MW10-03, MW11-54, and ERM02-02. These samples were analyzed for specific gravity, viscosity, BTEX, organic lead, and total lead. Specific gravity was analyzed by Method ASTM D1550. Viscosity was analyzed by Method ASTM D341. BTEX analysis was performed by EPA Method 8020. Organic and total lead were analyzed by EPA Method 6010.

TABLE 3-1

NAVAL FUEL DEPOT POINT MOLATE
MARCH 1994 QUARTERLY GROUNDWATER SAMPLING
LIST OF CHEMICAL ANALYSES

Sample ID	Analyses											BOD	Heterotrophic Plate Count
	VOC	SVOC	Pesticide/ PCB	TPH Purgeable & BTEX	TPH Extractable	Organic Lead	Total Metals	Dissolved Metals	Total Organic Carbon	Anions*	Nitrate/ Nitrite		
MW11-02 (26.0)	X	X		X	X	X	X	X	X	X	X	X	
MW11-05 (22.0)	X	X		X	X		X	X					
MW11-08 (22.0)	X	X		X	X	X	X	X	X	X	X	X	
MW11-40 (17.0)	X	X		X	X	X	X	X	X	X	X	X	X
MW11-92 (19.0)	X	X		X	X	X	X	X	X	X	X	X	X
MW11-95 (19.0)[1]	X	X		X	X	X	X	X	X	X	X	X	X
MW11-13 (26.0)	X	X		X	X		X	X					
MW11-93 (22.0)	X	X		X	X	X	X	X	X	X	X	X	X
MW11-54 (23.0)	X	X		X	X	X	X	X	X	X	X	X	X
MW11-96 (23.0)[2]	X	X		X	X	X	X	X	X	X	X	X	X
MW11-21 (22.0)	X	X		X	X	X	X	X	X	X	X	X	X
MW11-55 (23.0)	X	X		X	X	X	X	X	X	X	X	X	X
MW11-19 (23.0)	X	X		X	X	X	X	X	X	X	X	X	X
MW11-56 (22.0)	X	X		X	X		X	X					
MW11-57 (23.0)	X	X		X	X	X	X	X	X	X	X	X	X

TABLE 3-1 (Continued)

NAVAL FUEL DEPOT POINT MOLATE
MARCH 1994 QUARTERLY GROUNDWATER SAMPLING
LIST OF CHEMICAL ANALYSES

Sample ID	Analyses											BOD	Heterotrophic Plate Count
	VOC	SVOC	Pesticide/ PCB	TPH Purgeable & BTEX	TPH Extractable	Organic Lead	Total Metals	Dissolved Metals	Total Organic Carbon	Anions*	Nitrate/ Nitrite		
MW10-02 (9.0)				X	X								
MW10-04 (21.0)	X	X		X	X		X	X					
MW10-97 (21.0)[3]	X	X		X	X		X						
MW10-05 (19.0)	X	X		X	X	X	X	X	X	X	X	X	X
ERM10-01 (23.0)	X	X		X	X	X	X	X	X	X	X	X	X
ERM10-02 (19.0)	X	X		X	X		X	X					
MW10-08 (24.0)	X	X		X	X		X	X	X	X	X		
MW10-09 (19.0)	X	X		X	X	X	X	X	X	X	X	X	X
MW10-98 (19.0)[4]	X	X		X	X	X	X	X	X	X	X	X	X
MW10-10 (21.0)	X	X		X	X		X	X					
MW10-11 (21.0)	X	X	X	X	X		X	X					
MW10-12 (18.0)	X	X	X	X	X		X	X	X	X	X	X	
MW10-14 (19.0)	X	X	X	X	X	X	X	X	X	X	X	X	

* Anions = Chloride (Cl^-), Fluoride (F^-), Sulfate (SO_4), and Orthophosphate (PO_4)
1 Duplicate of MW11-92
2 Duplicate of MW11-54
3 Duplicate of MW10-04
4 Duplicate of MW10-09

TABLE 3-2

NAVAL FUEL DEPOT POINT MOLATE
MARCH 1994 QUARTERLY GROUNDWATER SAMPLING
LIST OF PURGING AND SAMPLING EQUIPMENT

Sample ID	Date Sampled	Purging Equipment	Sampling Equipment		Immiscible Phase	Dedicated Pre-Sampling Equipment (2-inch PVC drop pipe)
			VOAs	Other Analyses		
MW10-12 (18.0)	3/21/94	G	T	G	No	No
MW10-14 (19.0)	3/21/94	G	T	G	No	No
MW11-05 (22.0)	3/22/94	G	T	G	No	No
MW11-08 (22.0)	3/22/94	G	T	G	Oil Globules	No
MW11-19 (23.0)	3/22/94	G	T	G	Oil Globules	No
MW11-02 (26.0)	3/23/94	G	D	D	No	No
MW11-55 (23.0)	3/23/94	D	D	D	No	No
MW10-04 (21.0)	3/24/94	G	T	T	Slight Oil Sheen	No
MW10-05 (19.0)	3/24/94	T	T	T	No	No
MW10-10 (21.0)	3/24/94	T	T	T	No	No
MW10-08 (24.0)	3/25/94	G	T	T	No	No
MW10-09 (19.0)	3/25/94	T	T	T	No	No
MW11-13 (26.0)	3/25/94	D	D	D	0.03 foot	No
MW11-57 (23.0)	3/28/94	D	D	D	No	No
ERM10-01 (23.0)	3/28/94	D	D	D	0.01 foot	Yes
ERM10-02 (19.0)	3/28/94	D	D	D	No	No
MW11-21 (22.0)	3/29/94	D	D	D	No	No
MW11-92 (19.0)	3/29/94	D	D	D	0.20 foot	Yes
MW10-02 (9.0)	3/29/94	SS	D	D	No	No
MW10-11 (21.0)	3/29/94	SS	D	D	Slight Oil Sheen	No
MW11-54 (23.0)	3/29/94	D	D	D	0.01 foot	Yes
MW11-93 (22.0)	3/30/94	D	D	D	0.79 foot	Yes
MW11-56 (22.0)	3/30/94	D	D	D	No	No
MW11-40 (17.0)	3/31/94	D	D	D	0.01 foot	No

G Grunfos submersible pump
T Teflon bailer (non-disposable)
D Disposable teflon bailer
SS Stainless steel bailer

TABLE 3-3

NAVAL FUEL DEPOT POINT MOLATE
MARCH 1994 QUARTERLY GROUNDWATER SAMPLING
QA/QC SAMPLES - LIST OF CHEMICAL ANALYSES

Area No.	Sample ID	Analyses											Comments
		VOC	SVOC	Pesticide/PCB	TPH Purgeable & BTEX	TPH Extractable	Organic Lead	Total Metals	Dissolved Metals	Total Organic Carbon	Anions*	Nitrate/Nitrite	
Duplicate Samples													
11	MW11-95 (19.0)	X	X		X	X	X	X	X	X	X	X	Duplicate of M11-92 (19.0)
	MW11-96 (23.0)	X	X		X	X	X	X	X	X	X	X	Duplicate of MW11-54 (23.0)
10	MW10-97 (21.0)	X	X		X	X		X					Duplicate of MW10-04 (21.0)
	MW10-98 (19.0)	X	X		X	X	X	X	X	X	X	X	Duplicate of MW10-09 (19.0)
MS/MSD Samples													
11	MW11-02 (26.0)	X	X		X	X	X	X	X	X	X	X	Two sample volumes collected
	MW11-54 (23.0)	X	X		X	X	X	X	X	X	X	X	Two sample volumes collected
Equipment Blank Samples													
	EB00-01	X	X		X								Collected from Grundfos pump prior to sampling
	EB00-02	X	X		X								Collected from Teflon bailer prior to sampling
11	EB11-01	X	X		X	X							Collected from Teflon bailer between Area 11 and Area 10 samplings

TABLE 3-3 (Continued)

NAVAL FUEL DEPOT POINT MOLATE
MARCH 1994 QUARTERLY GROUNDWATER SAMPLING
QA/QC SAMPLES - LIST OF CHEMICAL ANALYSES

Area No.	Sample ID	Analyses											
		VOC	SVOC	Pesticide/PCB	TPH Purgeable & BTEX	TPH Extractable	Organic Lead	Total Metals	Dissolved Metals	Total Organic Carbon	Anions*	Nitrate/Nitrite	Comments
Trip Blank Samples													
11	TB11-01	X											
	TB11-02	X											
	TB11-03	X											
	TB11-04	X											
	TB11-05	X											
10	TB10-01	X											
	TB10-02	X											

* Anions = Chloride (Cl^-), Fluoride (F^-), Sulfate (SO_4), and Orthophosphate (PO_4)

4.0 WATER LEVEL DATA AND PRODUCT PLUME IDENTIFICATION

As part of the quarterly groundwater sampling program, water level and product thickness measurements were obtained. These measurements were obtained from monitoring wells at NFD Point Molate on May 2 and May 3, 1994 and are presented in Appendix A.

Water level measurements are presented in Table A-1 of Appendix A. The table shows the surveyed elevation (top of casing), the measured depth to water, and the elevation of the water in each well. This information was used to construct the water level contour map presented on Plate 2. The water level data were contoured using software that interpolates between measurement points by creating a uniform grid. The resolution of the grid is specified by the user. Modifications were performed manually in areas where site-specific conditions necessitated changes.

Product thickness measurements, shown in Table A-2 of Appendix A, were used to construct the hydrocarbon plume map presented in Figure 4-1. The following sections discuss both regional and site-specific groundwater trends and the extent of the floating hydrocarbon plume.

4.1 REGIONAL GROUNDWATER TRENDS

Groundwater flow direction in the vicinity of NFD Point Molate is generally toward San Francisco Bay. Groundwater flows from the steep hillsides surrounding the bay to the shoreline. Gradients are steep in the hillside areas and flatten as they approach San Francisco Bay.

4.2 SITE-SPECIFIC GROUNDWATER TRENDS

In general, groundwater flow at NFD Point Molate follows the regional trend, toward San Francisco Bay. However, specific characteristics at the facility, either natural or man-made, have affected groundwater flow patterns. The Treatment Ponds Area, bedrock outcrops and associated subcrops, and floating hydrocarbons have an influence on local trends.

The groundwater flow direction in the immediate vicinity of the Treatment Ponds Area is mostly radial, as it is influenced by the water-table mounding evident in this area. The hydraulic gradient in

the western side of the treatment ponds is much greater than that in the eastern side. This is primarily due to the influence of the subsurface cutoff wall located downgradient of the former sump pond.

Water level contours trend slightly upgradient along diesel Road, toward Tank G. This trend may be due to the preferential flow of groundwater corresponding to the alluvial channel (inferred under CTO 0143) in this area.

A groundwater mound exists within the vicinity of the treatment ponds. This groundwater mound is attributable to several factors. The existing treatment ponds are unlined and clearly influence the local water table in the vicinity of the ponds. The subsurface cutoff wall located directly downgradient of the treatment ponds provides a hydraulic barrier resulting in the sharp gradient evident here. In addition, the compaction and permeablility of fill material in the ponds area may be different than that in the fill material originally used within the vicinity of the railroad tracks along the shoreline. The railroad tracks were built on fill that formerly extended as a strip of land between the shoreline near Building 1 and Drum Lot No. 1.

A large area of outcropping and subcropping bedrock forms a natural groundwater divide between Areas 11 and 10. Movement of groundwater through the bedrock may exist through primary fractures or joint systems. However, water has not been encountered in the bedrock outcrops or subcrops. Groundwater in the near-shore environment is attributed primarily to recharge from the upgradient hillsides and to hydraulic communication with the bay.

Another bedrock outcrop adjacent to Diesel Road is located along the inferred paleochannel interpreted from CTO 0143 site characterization subsurface data. The location of the paleochannel is likely influenced by the more resistant bedrock subcrop. The upgradient bend of water level contours in this area may be attributable to this paleochannel.

Floating hydrocarbons present in wells south of the Treatment Ponds Area (MW11-27, MW11-28, MW11-25, PZ11-27B) may also have an influence on water levels in this area. These monitoring wells contain diesel and bunker fuel mixtures. Floating product could result in depression of the water table, causing somewhat anomalous water levels in their immediate vicinity.

South of the groundwater divide (Area 10), water level data are limited to that from 10 newly installed monitoring wells and two previously existing (ERM-West) monitoring wells. An extensive bedrock outcrop parallels the shoreline in this area. Water elevations along the south shoreline exhibit a fairly steep gradient between monitoring wells MW10-02 and MW10-03, where water levels drop 10 feet within 200 feet. Higher water levels in well M10-02 may be attributed to perched groundwater adjacent to or over the bedrock subcrop. South of monitoring well MW10-03, water level contours are fairly regularly spaced and water elevations slowly increase. The increase in water elevation is likely due to recharge from upland areas draining via steep ravines toward San Francisco Bay. Two subcrops along the shoreline form small groundwater divides. No groundwater was encountered in soil borings drilled into these subcrops (SB10-06 and SB10-07) during the February 1994 investigation under CTO 0248.

Groundwater elevation data obtained from the southernmost portion of the facility and the waste disposal area (Area 2) mimic the regional trend of groundwater flowing from the steep hillside toward the shoreline.

4.3 FLOATING PRODUCT PLUME EXTENT

Product thickness measurements and fuel identification were used to depict the extent of hydrocarbon plumes as shown on Figure 4-1. In general, bunker fuel, diesel, and mixtures of bunker and diesel are present in the Treatment Ponds Area. Small isolated plumes of diesel fuel occur along the south shoreline and in the vicinity of the waste disposal area.

In the Treatment Ponds Area, the primary floating hydrocarbon is bunker fuel, found in numerous monitoring wells along the west edge of the treatment ponds and extends to the shoreline. The thickness ranged from 0.01 feet in several wells to 0.8 feet in piezometer PZ11-33A.

At the southern edge of the Treatment Ponds Area, a plume of mixed bunker and diesel exists. The diesel fuel is attributable to historical spills and leaks in areas upgradient of the Treatment Ponds Area and subsequent movement in pipelines (or the inferred paleochannel) along Diesel Road (PRC 1992b). Diesel fuel, when mixing with bunker fuel, results in a more mobile plume that has subsequently advanced to the shoreline. Floating diesel exists at the northeastern edge of the Treatment Ponds Area in monitoring well MW11-40. Diesel fuel floating in monitoring well MW11-54 may be a

continuation of the plume just north at monitoring well MW11-93. Piezometer PZ11-31A also contains more than 3 feet of diesel as floating product.

South of the groundwater divide (Area 10), two areas of floating hydrocarbons have been identified. Diesel exists at monitoring well MW10-03 (0.8 foot) and a diesel/bunker mixture exists at mionitoring well ERM-1 (0.04 foot). The occurrence of diesel at these locations is likely attributable to leakage from a subsurface pipeline along Burma Road from 1987 to 1988.

In the vicinity of the disposal area (Area 2), two wells contain floating hydrocarbons. Well ERM-EW1 has historically contained several tenths of a foot of diesel, and ERM-EW2 has been monitored having up to 2 feet of diesel, possible mixed with JP-5. Diesel fuel is also visible in several hillside seeps in this area. Seeps are located near ERM-EW1, another is located upgradient of the disposal area, and another is located downgradient of Tank 19.

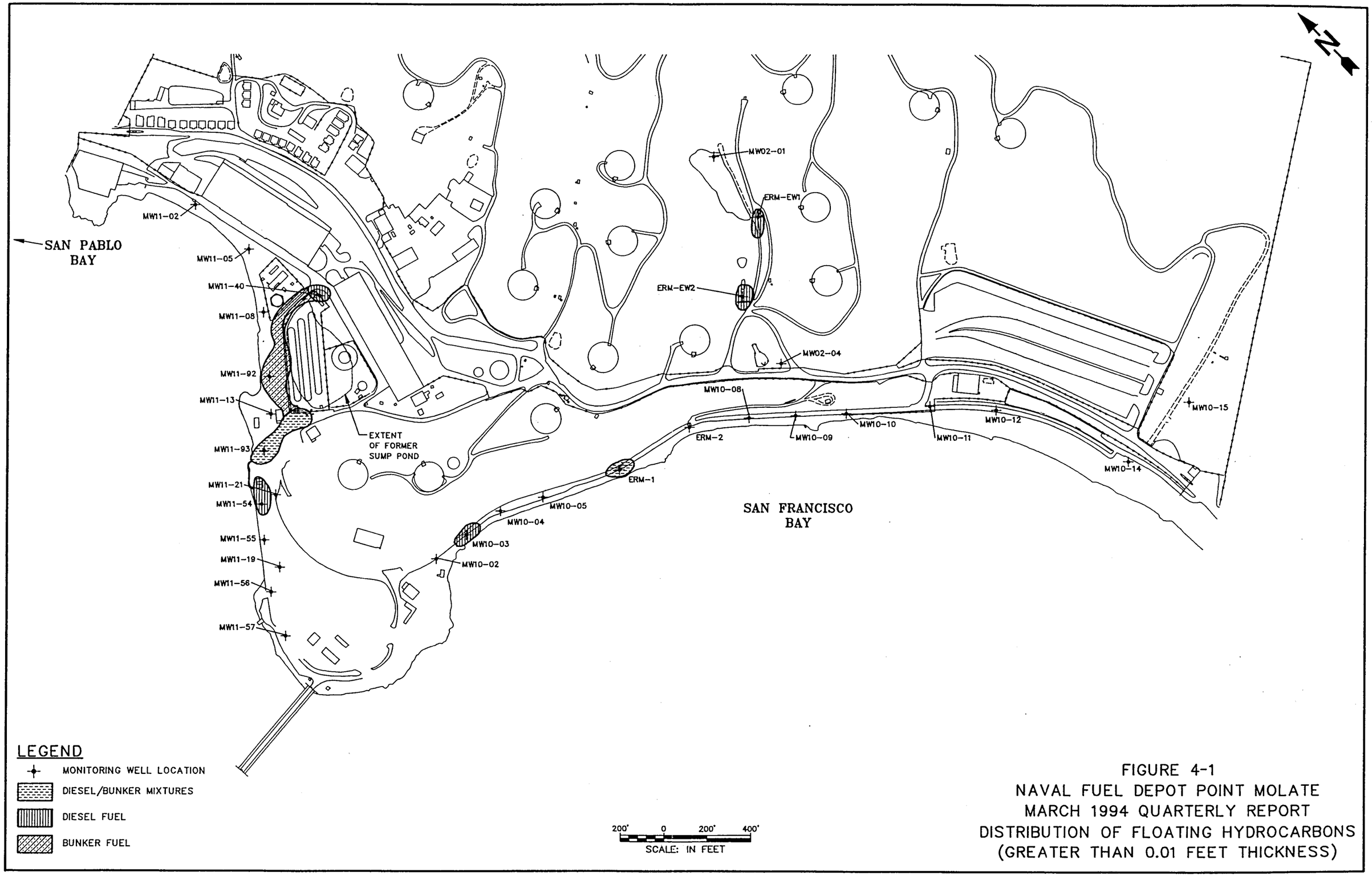

FIGURE 4-1
NAVAL FUEL DEPOT POINT MOLATE
MARCH 1994 QUARTERLY REPORT
DISTRIBUTION OF FLOATING HYDROCARBONS
(GREATER THAN 0.01 FEET THICKNESS)

5.0 CHEMICAL ANALYSIS RESULTS

This section describes and summarizes results of groundwater and hydrocarbon samples that were submitted for chemical, biochemical, or hydrocarbon identification (characterization) analyses. Also described in this section are the results of groundwater data validation and QA/QC sample results.

5.1 DISTRIBUTION OF ORGANIC CONSTITUENTS

Organic chemicals detected in groundwater at NFD Point Molate are primarily related to fuel-related constituents with some isolated occurrences of chlorinated VOCs. The analyses are targeted at determining the aqueous phase constituents which may be in hydraulic communication with San Francisco Bay and their extent. Some analyses, for example organic lead, were targeted at confirming the absence of constituents in groundwater, as sources for these compounds were not known to exist.

Figures are included in reference to the following subsections depicting the concentration and distribution of various organic constituents using isoconcentration contours.

5.1.1 TPH Purgeable and Extractable

TPH-P analyses were quantitated against standard laboratory standards and reported as BTEX, gasoline, and other components. TPH-E (diesel) analyses were quantitated against one standard laboratory standard (JP-4) and four site-specific fuel standards provided from actual NFD Point Molate fuel samples or collected from actual floating product in monitoring wells. These fuels are JP-5, diesel (F-76), weathered diesel, and bunker fuel. JP-5 (jet turbine fuel) and F-76 (marine diesel fuel) samples were provided by the NFD Point Molate laboratory. The weathered diesel sample was collected from floating product in monitoring well MS11-93 (PRC #3), which has consistently maintained a recognizable mixture of diesel and bunker fuel. The bunker fuel sample was collected from floating product in monitoring well MW11-92 (PRC #2). It is the most representative location exhibiting a consistent immiscible phase of unmixed bunker fuel.

Other components, as reported by the laboratory, were used to identify detectable concentrations of fuel mixtures which did not fall 90 percent within the calibration standard range. If the detectable hydrocarbon mixture did not exhibit a reasonable pattern match with any of the calibrated standards,

it was further qualified and designated with a "Y" qualifer. Data exhibiting specific gas chromatograph peaks or patterns not resembling a typical fuel pattern were qualified with a "Z" qualifier. Manually entered data were qualified with an "X" qualifer. This qualifier is used to document a change in procedure between computer-generated entry versus manual entry. It does not reflect on the quality of the data.

Twenty-four groundwater samples were analyzed for TPH-P and TPH-E exclusive of four duplicate samples. The results of these analyses are included in Appendix B, Tables B-1 and B-2. The results of TPH analyses are summarized by physiographic location, generally north to south, Area 11 followed by Area 10. Some monitoring well designations do not follow numerical sequence even though they are sequentially located. Table 5-1 summarizes the detection frequency and range of detected concentrations under TPH analyses.

Benzene, toluene, and xylene were detected in four of 24 groundwater samples and ethylbenzene in two of 24 samples. Gasoline was not detected in any groundwater samples under the TPH-P analysis. Y-qualified other components were detected in 14 of 24 groundwater samples and Z-qualified other components in one of 24 samples.

Under TPH-E analyses, JP-4 was detected in one of 24 samples; JP-5 was not detected in any samples; diesel (F-76) was detected in two of 24 samples; weathered diesel was detected in one of 24 samples; bunker fuel was detected in six of 24 samples; Y-qualified other components were detected in three of 24 samples; and Z-qualified other components in two of 24 samples.

TPH-P and TPH-E results will be discussed by area, beginning with Area 11 (north of the groundwater divide) followed by Area 10 (south of the groundwater divide). Figures 5-1 through 5-5 correspond to the following discussion of TPH-P results and Figures 5-6 through 5-8 correspond to the discussion of TPH-E results.

TPH-P and TPH-E were not detected in the north shoreline northernmost monitoring wells (MW11-02, MW11-05), as was expected, based on previous (1992) data. Other TPH components (as defined by the laboratory) in the purgeable analysis were detected at well MW11-08, which is just north of the approximate extent of the floating bunker fuel plume (see Section 4.3).

Bunker fuel was also detected under the TPH-E analysis at well MW11-08, supporting identification of the northern extent of the bunker fuel plume. Bunker fuel was detected at monitoring well MW11-57, the southernmost well in the north shoreline wells, suggesting this location as the southern extent of detectable bunker fuel north of the groundwater divide.

Bunker fuel was not detected in groundwater collected directly beneath floating bunker fuel in well MW11-92. Other compounds, as defined by the laboratory, were detected in the groundwater from this well under TPH-P and TPH-E analyses, which are probably attributable to the bunker fuel or heavy degraded compounds with similar carbon ranges.

It should be noted that no other lighter hydrocarbon under TPH-P or TPH-E analyses was detected in the sample from well MW11-92, confirming that bunker fuel does not contribute to a light hydrocarbon aqueous phase plume.

An aqueous phase plume is developed, however, in the vicinity of wells MW11-93, MW11-54 MW11-21, and MW11-19, as shown on Figures 5-1 through 5-4. These figures depict the TPH-P concentrations and extent in the north shoreline monitoring wells.

The highest detection of benzene in groundwater (73 μg/L) was encountered at monitoring well MW11-19. Toluene, ethylbenzne, xylene, bunker fuel, and other compounds were detected at this location. Also, this was the only location where JP-4 was detected. This aqueous phase plume is well developed in this area and extends to newly installed monitoring well MW11-54, where it is likely in hydraulic communication with San Francisco Bay. Wells MW11-54 through MW11-57 were installed under CTO 0248 to determine the extent of the aqueous phase plume previously described under CTO 0143. The detection of only heavier hydrocarbons (other compounds and bunker fuel) in wells MW11-55, MW11-56, and MW11-57, however, suggest the somewhat restricted definition of the more mobile aqueous phase (BTEX) plume in wells MW11-93, MW11-54, MW11-21, and MW11-19.

The detection of diesel (F-76) in monitoring wells MW11-40 (18,000 μg/L) and MW11-54 is to be expected since each of these wells contained distinct immiscible phases described in the field as diesel (see well development and groundwater sampling data in Appendices F and G, respectively).

Weathered diesel was unexpectedly not detected in the groundwater sample from well MW11-93, where the weathered diesel fuel standard was collected from the floating immiscible phase. Other compounds, as defined by the laboratory, were detected in this sample, suggesting the interpretive (variable) nature of laboratory identification of weathered fuels.

Six of the 11 south shoreline monitoring wells contained detectable concentrations of mostly other compounds under TPH-P and TPH-E analyses. The concentration and extent of these detections, as depicted on Figures 5-5 and 5-8, is limited to the area betweeen wells MW10-02 to MW10-08. A questionable detection (duplicate sample MW10-98 only) of other compounds (Z-qualified) at low (180 μg/L) concentration was reported at well MW10-09. No detectable TPH-P or TPH-E was reported from well MW10-10 to the southern extent of the monitoring well network, MW10-14. This is to be expected as sources of hydrocarbons in groundwater at the far southern portion of the facility were not anticipated.

The detection of weathered diesel and other compounds at well ERM 10-01 is expected since weathered diesel was encountered as an immiscible phase in this well. The detection of hydrocarbons in groundwater from monitoring well ERM 10-01 north to well MW10-02 is also to be expected considering the chronic leakage of diesel in a subsurface pipeline leak along Burma Road in this direct vicinity. Historically, an upgradient source of JP-5 also exists from a leaking pipeline elbow near Tank 3 during 1987 or 1988.

5.1.2 Volatile Organic Compounds

Results of volatile organic analyses generally correspond with that of TPH-P data described in the previous section. Table 5-2 summarizes the detection frequency and concentration ranges of VOCs in groundwater. Benzene, the most frequently detected compound, was found in nine of 23 monitoring wells. Toluene, xylene, and ethylbenzene were each detected in four of 23 monitoring wells. Some chlorinated compounds were also detected, but at low frequency and low concentrations, as shown in Table 5-2. The north shoreline groundwater data will be described first, followed by south shoreline groundwater data.

Groundwater samples from the northernmost monitoring wells, MW11-02, MW11-05, and MW11-08, contained no detectable compounds with the exception of well MW11-05. TCE (2 μg/L),

1,1-dichloroethene (1,1-DCE) (0.2J μg/L), and 1,2-dichloroethene (1,2-DCE) (4μg/L), both breakdown products of TCE, were reported from this groundwater sample.

Other compounds detected in samples from several Area 11 and 10 monitoring wells include methylene chloride, acetone, carbon disulfide, and 2-butanone. These compounds are normally attributable to common laboratory contaminants and are not considered real contamination associated with groundwater samples. The detection of 2-butanone may be real, however, as concentrations of this compound ranged from 3 to 39 μg/L and it was not reported in associated laboratory blanks.

Groundwater quality north of monitoring well MW11-08 is therefore considered unaffected by known hydrocarbon contamination just south of this location. The detections of TCE, 1,1-DCE, and 1,2-DCE at monitoring well MW11-05 corresponds to 1992 data from this monitoring well, where 1,2-DCE was estimated at 4 μg/L. This suggests a source of TCE or related solvents in this vicinity, possibly via an isolated groundwater plume from the former sump pond. TCE was detected at two locations in the 1992 baseline sampling event at monitoring well MW11-44 and piezometer PZ11-01, both located directly in the vicinity of the former sump pond. This suggests that the former sump pond may be a source of TCE or other solvents.

A very low concentration of benzene, 0.09 J, was detected in the groundwater sample collected beneath floating bunker fuel in monitoring well MW11-92. This was as expected given the very low solubility of bunker fuel in water. The concentrations of benzene increase slightly to the south, where the floating bunker fuel plume merges with floating diesel. All BTEX compounds were detected at low concentrations (see Table 5-2) in the sample from monitoring well MW11-93.

Benzene and chlorobenzene, 2 J μg/L and 93 μg/L, respectively, were reported in the sample from monitoring well MW11-13. This data corresponds well to the previous (1992) detection of benzene (2 J μg/L) and chlorobenzene (180 μg/L) at this well.

BTEX was detected in the groundwater samples from monitoring wells MW11-54, MW11-21, and MW11-19, confirming the presence of a well-developed BTEX plume in this area (see Figures 5-9 through 5-12). The highest concentrations of BTEX were detected at well MW11-19 from both volatile organic analyses (method 8020) and TPH-P analysis (method 418.1). The March 1994 data reported for wells MW11-19 and MW11-21 corroborate 1992 data, also indicating the presence and highest concentrations of BTEX as an aqueous phase plume. The data collected from newly installed

wells MW11-54, MW11-55, MW11-56, and MW11-57 indicate that the BTEX plume extends to the shoreline in the vicinity of well MW11-54 and possibly as far south as well MW11-57. The proximity of the BTEX plume to the shoreline suggests hydraulic communication of BTEX compounds with San Francisco Bay.

Somewhat unexpected was the detection of 1,2-DCE in groundwater at monitoring wells MW11-19, MW11-55, and MW11-57 and vinyl chloride in MW11-57 (see Figure 5-13). Migration of chlorinated solvents in the former sump pond (as discussed earlier) was not expected this far south of the Treatment Ponds Area. Detections of solvents (breakdown products of TCE, 1,2-DCE, and vinyl chloride) in this area may be attributable to the storage of such compounds (solvents) in Drum Lot No. 1, a mass storage area for drums during earlier operations at NFD Point Molate. These monitoring wells are located in direct vicinity or directly downgradient of the former drum storage area. Chlorinated compounds were not detected at monitoring well MW11-19 during 1992. The concentrations reported at wells MW11-55 and MW11-19 are very low and estimated (see Table 5-2). Those reported for well MW11-57 (1,2-DCE [8 μg/L] and vinyl chloride [11 μg/L]) will be confirmed in the next quarterly event through collection of duplicate VOC analyses.

South of monitoring MW11-57 is the groundwater divide discussed earlier, and no additional groundwater data exists between well MW11-57 and the groundwater divide. However, an Area 10 soil boring (SB10-01) was attempted just south of the fuel pier, in which cobbles and subcropping bedrock prevented completion of a monitoring well. Hydrocarbons were encountered in drill cuttings as deep as 13 feet, suggesting a source of hydrocarbon constituents if groundwater is present at this near-shore location.

South of the groundwater divide (Area 10), benzene was detected in only one of 11 monitoring wells (MW10-05) (see Table 5-2 and Figure 5-9).

The isolated detection of various chlorinated compounds at monitoring well MW10-10 (see Figure 5-13) was unexpected. These compounds include 1,1-DCE, vinyl chloride, 1,1,1-TCA, 1,1-DCA, and chloroethane. These compounds may represent breakdown products of TCE. Sources of solvents in this vicinity are unknown since the closest potential source is Drum Lot No. 2 (south drum lot), which is located about 600 feet cross gradient. Another possible, but unlikely, source is migration from contaminants in the waste disposal area, located about 1,000 feet upgradient of this monitoring

well. Confirmation of these chlorinated compounds will be assessed through collection of duplicate VOC analyses in subsequent quarterly sampling events.

5.1.3 Semivolatile Organic Compounds

The detection of SVOCs in Areas 10 and 11 groundwater samples was mostly infrequent with the exception of 2-methylnaphthalene (seven of 22 samples) and directly attributable to the presence of immiscible phase hydrocarbons or well-developed aqueous phase plumes. Table 5-3 summarizes the detection frequency, concentration range, and specific concentrations at each monitoring well for all SVOCs detected, except common laboratory contaminants.

Within Area 11, the detection of 2-methylnaphthalene, acenaphthene, fluorene, and pyrene (see Figures 5-14 and 5-15) is as expected given the presence of immiscible phase hydrocarbons at every location where SVOCs were detected. These compounds are related to diesel and heavier fuels, as seen in the results of hydrocarbon analyses (Section 5.5). The highest concentration of 2-methylnaphthalene (also the most frequently detected compound in 1992 data) was reported at well MW11-93 (61 μg/L). It was detected at an estimated concentration of 210 μg/L (also the highest concentration) at the same monitoring well in the 1992 sampling event.

Within the south shoreline monitoring wells (Area 10), SVOCs were detected in only two of 11 monitoring wells, MW10-04 and ERM-1 (ERM10-01), as shown on Figures 5-14 and 5-15. Again, these detections are attributable to known fuel sources at each location, floating diesel at ERM-1 and known diesel from pipeline leakage at MW10-04.

5.1.4 Pesticides/Polychlorinated Biphenyls

No pesticides/PCBs were detected in any Area 10 monitoring well. Three monitoring wells were sampled for pesticides/PCBs, MW10-11, MW10-12, and background well MW10-14. Monitoring wells MW10-11 and MW10-12 were specifically chosen because they are located down or cross gradient to the Disease Vector Ecology and Control Center (DVECC), where the use and application of pesticides was taught to Naval personnel. Results of groundwater analyses for pesticides/PCBs is included in Table B-7 of Appendix B.

5.2 RESULTS OF INORGANIC CONSTITUENTS

Total and dissolved metals were collected from 23 of 24 groundwater samples. The detection frequency, concentration ranges, average concentration, and concentrations at background well MW10-14 are shown in Table 5-4. Table B-5 in Appendix B contains all metals data for each monitoring well sampled. Total and dissolved concentrations are displayed side by side for comparison.

Significant decreases in concentrations between total and dissolved metals were noted for aluminum, iron, nickel, vanadium, and lead. This is attributable to the bonding of these compounds to colloidal particles in the groundwater, which were removed or greatly reduced with 0.45-micron filtering.

The average concentrations of total metals corresponds to average values of total metals obtained from the 1992 investigation conducted by PRC (PRC 1992b).

Based on current and historical data, metals (particularly lead) are not considered elevated in groundwater (near-shore monitoring wells) at NFD Point Molate. There is no association of elevated metals and known hydrocarbon sources, as expected.

5.3 RESULTS OF WATER QUALITY ANALYSES

Additional water quality parameters were measured either in the field, including pH and TDS, or through laboratory analyses, including TOC, organic lead, and major anions (chloride, fluoride, nitrogen as nitrite, nitrogen as nitrate, phosphate, and sulfate). Results of major anions are provided in Table 5-5. Results of pH, TDS, TOC, and organic lead are provided in Table 5-6.

With the exception of sulfate reported at 14,000 mg/L for monitoring well MW11-08, previously nondetected in 1992 data, no anomalies for anions were noted.

Organic lead was not detected in any groundwater samples, as shown in Table 5-6. TOC values, ranging from 1.5 to 25 mg/kg, were somewhat higher, but did not necessarily correlate to monitoring wells that contained hydrocarbons in aqueous or immiscible phases.

TDS and pH values shown in Table 5-6 were reported from conditions measured at the time of groundwater sample collection (in the field).

5.4 RESULTS OF BIOCHEMICAL ANALYSES

Table 5-7 lists the results of biochemical analyses conducted on groundwater samples. Microbial plate count, measured in colony-forming units per milliliter (CFU/mL) measures the activity of microorganisms in a medium. There is some correspondence to the concentration of hydrocarbons in groundwater and increased plate count. As seen in Table 5-7, plate counts generally increase at locations where aqueous phase or immiscible phase hydrocarbons are present in groundwater. An exception was noted at well MW11-92. This well contains floating bunker fuel, but the microbial plate count was low. This is probably attributed to the fact that bunker fuel is fairly insoluble. Another exception is well MW10-09, where high plate count does not correspond with petroleum contamination.

BOD ranges from 6.0 mg/L to 30 mg/L. Generally, BOD corresponded to wells exhibiting petroleum contamination.

5.5 RESULTS OF LABORATORY PRODUCT IDENTIFICATION

Floating hydrocarbons were collected from monitoring wells MW11-92, MW11-93, MW11-54, MW10-03, and ERM02-02. These samples, containing only hydrocarbons, were submitted for specific analyses that may be used in design consideration for remedial activities. These analyses include specific gravity, viscosity, BTEX, organic lead, total (elemental) lead, and polynuclear aromatic hydrocarbons (PNAs). Results of specific gravity, viscosity, BTEX, organic lead, and elemental lead are summarized in Table 5-8. Table 5-9 summarizes results of PNAs detected in fuel samples. Appendix C includes the report provided by Friedman and Bruya, Inc., including PNA data and carbon range (GC characterization) data for each sample.

Hydrocarbon identification was also described for each sample as follows:

MW11-92

The material present was indicative of diesel or heating oil and a bunker C or lubricating oil. The boiling range for the material started at n-C8 and ended at n-C25 with a maximum at n-C17 for the medium boiling material and started at n-C25 and ended at n-C32 with a maximum at n-C28 for the heavy boiling material. There was an absence of n-alkanes, indicating this material was weathered. The electron capture detection (ECD) showed the presence of halogenated or oxidized compounds.

M11-93

The material present was indicative of diesel or heating oil. The boiling range for the material started at n-C8 and ended at n-C30 with a maximum at n-C18. There was an absence of n-alkanes, indicating this material was weathered. The ECD showed the presence of halogenated or oxidized compounds.

MW11-54

The material present was similar to that found in MW11-93.

MW10-03

The material present was indicative of diesel fuel; most likely a JP-5 or JP-8. The boiling range for the material started at n-C7 and ended at n-C20 with a maximum at n-C12. The presence of a nice Gaussian envelope of n-alkanes indicates this material is relatively fresh. The very beginning of the envelope shows that some evaporative weathering has taken place.

ERM02-02

The material present was indicative of diesel fuel. It may be a JP-5 or JP-8 but is too weathered for a more definitive statement. The boiling range for the material started at n-C7 and ended at n-C18 with a maximum at n-C11. There was an absence of n-alkanes, indicating chemical and/or biological degradation.

Noted in the PNA data (see Table 5-9) is the consistent detection of acenapthylene, fluorene, phenanthrene, anthracene, pyrene, benzon(a)athracene, and chrysene in product samples and the detection of acenapthylene, fluorene, phenanthrene, and pyrene in groundwater samples where floating product is encountered (see Figure 5-14). This correlation confirms the presence of specific SVOCs in groundwater in direct relationship to fuel floating on groundwater.

5.6 GROUNDWATER DATA VALIDATION

Data validation is the systematic and independent verification of data quality. The data validation process provides information on analytical limitations of data based on specific QC criteria established in the following Laboratory Data Validation guidance documents:

- National Functional Guidelines for Organic Data Review (EPA 1991)
- Functional Guidelines for Evaluating Inorganic Analyses (EPA 1988)

An independent firm validated the data for this quarterly sampling effort. The CLEAN Level D (cursory) was used for validation of 100 percent of the sample results analyzed by CLP methods. The CLEAN Level C (full) validation protocol was used to validate 10 percent of the sample results, analyzed by CLP methods. Table 5-10 presents a list of validation qualifiers. The laboratory-generated data were reviewed for the following criteria (these criteria apply to both Level C and D validation except where noted):

- Sample and extraction (if applicable) holding times
- Daily gas GC/MS tuning criteria for the evaluation of detector stability (Level C only)
- Percent relative standard deviation (%RSD) for the initial calibration curve and the percent deviation for the continuing calibration
- Relative responses factors for selected compounds used to monitor instrument performance
- Results for laboratory method blanks and field blanks
- Percent recoveries (%Rs) for surrogate compounds and MS/MSD samples
- Instrument response from internal standards, which are used to monitor the response of the instrument for the analyses of all field and QC samples

- Target compound list (TCL) identifications based on relative retention times and mass spectral comparisons to standards
- TICs
- Verification of compound quanitation and reported detection limits
- Overall assessment of data

The validators reviewed the following for inorganic laboratory data:

- Sample holding times
- %RSD for the initial calibration curve and the percent deviation for the continuing calibration verification
- Results for laboratory method blanks and field blanks
- Results for the inductively coupled plasma emission spectroscopy (ICP) interference check sample, which is used to monitor the level of spectral interference (Level C only)
- %Rs for laboratory control samples and MS/MSD samples
- Results for ICP serial dilutions, which are used to assess proper analysis and quantitation of analytes
- Graphite furnace atomic absorption (AA) QC (Level C only)
- Verification of analyte quantitation and reported detection limits
- Overall assessment of data

Validation reports are presented in Appendix D and those results are summarized in the following sections.

Attached is a review of the validation reports for samples collected at NFD Point Molate. The validated sample delivery groups (SDGs) reviewed were U3102, U3138, and U3139. All the data associated with those SDGs were 100-percent cursory validated and 10-percent fully validated. Data validation was performed under the guidelines of:

- National Functional Guidelines for Organic Review
- Laboratory Data Validation Functional Guidelines for Evaluating Organic Analysis

- Laboratory Data Validation Functional Guidelines for Evaluating Inorganic Analysis
- PRC Navy CLEAN SOW (1991)

The following assessment reviews and highlights any anomalies encountered during the data validation. Each SDG is addressed individually, and then an overall assessment of the data is discussed.

SDG U3102

Full validation was conducted on sample MW11-19(23) for VOCs, SVOCs, TPH-gasoline (TPG-G)/BTEX, TPH-diesel (TPH-D), and sample MW20-12(18) for pesticides/PCBs.

Nine samples analyzed for TPH-Ds exceeded the 40-day extraction holding time. These samples exceed the holding times by 5 to 7 days. Of these nine samples, only five had concentrations above the method detection limits for TPH-D. All samples were qualified with either J-H or UJ-H. The data is acceptable for use with qualifications.

Blank contamination was prevalent throughout the data analysis on SDG U3102. However, several were common laboratory contaminants, such as, methylene chloride, acetone and phthalates. Other blank contamination included: benzene, xylene, aluminum, mercury, arsenic, potassium, and zinc. Negative blank contamination was detected in all analysis of antimony, silver, and vanadium. Blank contamination were qualified with J-Z or UJ-Z. All samples with blank contamination are acceptable for use with qualification.

Laboratory method performance is assessed through the %R of samples spiked with surrogate compounds. Due to surrogate recovery outside of QC limits the following analyses are considered estimated and were qualify with J-S and UJ-S:

- All analyte for pesticide/PCB samples MW10-14(9.0) and MW10-12(18-0)
- All detects for volatile sample TB10-01RE

All samples with poor-surrogate recoveries are useable with qualification.

The MS/MSD are used to assess the long-term precision and accuracy of the analytical method. Matrix spike recovery were less than 30 percent in all initial samples for silver analysis. This makes all non-detected silver samples R qualified and unusable. Detected samples of silver are acceptable with a J-N qualifier. Aluminum, selenium, and thallium had poor %R during the MS/MSD and are qualified (N or UJ-N) as such.

Anomalies in initial calibrations (%RSD greater than 30 percent) and continuing calibrations (%D greater than 25 percent) were noted in several samples for chloromethane, acetone, 4-chloroaniline, 3,3'-dichlorobenzene, and N-nitrosodiphenylamine. These anomalies are usable with qualifiers UJ-J or J-K.

Due to a response factor (RF) less than the minimum RF, all bromoform and PCE were qualified as unusable (R).

In general, the QC criteria reviewed in SDG U3102, other than those discussed above, were met and are considered acceptable.

SDG U3138

The full validation of SDG U3138 was conducted on samples MW11-93(22), and MW11-57(23) for all analytes.

Holding times were exceeded for extraction of samples ERM02-02(14) and MW02-99(14) for the analyses of SVOC and pesticides/PCBs. Detected results were qualified with J-H, and nondetected samples were qualified with UJ-H. Sample MWH-13(26) exceed the holding time for mercury as was qualified with J-H. All data is acceptable with qualification.

Blank contamination helps to assess the accuracy of the data. Blank contamination was detected in several samples and contained common laboratory contaminants such as, methylene chloride and bis(2-ethylhexylle) phthalate. Other blank contamination detected were total xylene and several metals. However, all blank contaminations were qualified as nondetected (U) as they were below the action levels.

All samples are spiked with surrogate compounds to assess method performance in the laboratory. Samples ERM02-02(14), MW02-01(24), and MW02-04(14) analyzed for pesticides/PCBs were qualified with J-S or UJ-S. All data is usable with qualification.

Accuracy of the analytical methods are assessed through the analysis of MS/MSD. Total and dissolved metal samples with detected amounts of titanium, selenium, and antimony were qualified as UJ-N due to poor %R. Non-detect selenium values were qualified as unusable (R).

Continuing calibration with %RSD greater than 30 percent were qualified as estimated UJ-K and J-K. These analyses included acetone and hexachlorobenzene.

In general, the QC criteria reviewed for SDG U3138, other than these discussed above, were met and are considered acceptable, but pesticides/PCBs exhibited poor surrogate recoveries. However, since none of the pesticides/PCBs samples has any detectable results, all samples were qualified as UJ-S.

SDG U3139

Full validation was conducted on sample MW11-54(23) for all analytes.

Blank contamination is used to assess the accuracy and precision of the data. The following analytes (excluding common laboratory contaminants) were detected in several samples; xylene, aluminum, iron, potassium, zinc, and mercury. These analytes were qualified as either U-B, UJ, or B.

Surrogate recoveries in all pesticides/PCBs analyses in sample MW10-11(21) were outside QC limits; therefore, they have been qualified as J or UJ.

Thallium in samples MW10-11(21), MW11-54(23), and MW11-96(23) were qualified as estimated due to poor %R of the MS/MSD.

The duplicate sample had %RPD greater than the QC criteria for aluminum in sample MW10-11(21), MW11-54(23), and MW11-96(23).

Bromoform and PCE in sample MW11-54(223), MW11-96(23) and MW10-11(21) were qualified as unusable (R) due to an RF less than the minimum RF.

Overall, the data qualified as discussed above is usable, except the R-qualified data. In general, the data presented in SDGs U3102, U3138 and U3139 are acceptable as qualified. It should be noted that all nondetects of bromoform and PCE in SDGs U3102 and U3139 are unusable (R). Also unusable (R) in SDG U3138 are all nondetect selenium values.

Upon completion of the data evaluation procedure, PRC calculated the relative percent differences (RPDs) for field duplicate samples and evaluated the results against DQOs.

5.7 QA/QC SAMPLE RESULTS

QA/QC samples were collected to evaluate data with respect to the following five criteria: precision, accuracy, representativeness, completeness, and comparability, which are referred to as the PARCC parameters. The guidance for evaluating data relative to these criteria is provided by EPA CLP SOW for Inorganic Analysis (EPA 1990b), the CLP SOW for Organic Analysis (EPA 1990a), and the quality assurance project plan (QAPjP).

QC samples are prepared in the laboratory or collected in the field and used to evaluate the field sampling effort and analysis procedures. Analytical and field precision is evaluated by the results of the field duplicate sample pairs. Analytical and field accuracy and precision are assessed by the results of MS/MSD samples that are collected in the field and spiked with target analytes in the laboratory. Representativeness was achieved by the careful selection of monitoring wells to be sampled and the consistent application of established field and laboratory procedures. Completeness is a measure of the percentage of project-specified data that are deemed valid. Percent completeness for QC sample collection is also discussed in the following sections. Comparability was promoted through the use of standard units of measure in reporting of the analytical data and the selection of analytical methods. The units of measure and the analytical methods used were comparable to those used by previous investigators at NFD Point Molate.

Table B-10 in Appendix B contains analytical results of QA/QC samples.

5.7.1 Field Duplicates

Field duplicate samples are two samples collected at the same time and from the same source that are submitted as separate samples to a laboratory for analysis. A field duplicate is analyzed for the same

parameters as those of the associated primary sample. Field duplicate results are used to evaluate combined sampling and analytical precision through the calculation of RPD values for duplicate pairs. Field duplicate samples were scheduled to be collected for 5 percent of the total number of samples. The acceptance criterion for the precision of field duplicates was set for water samples at an RPD value less than 25 percent.

5.7.1.1 Fulfillment of QC Sampling Objectives

The fulfillment of QC sampling objectives was measured by calculating the actual number of QC samples collected and analyzed, divided by the required number of samples, and then multiplied by 100 to obtain a percentage. The QC sampling objective for field duplicates was 5 percent. Sampling objectives for field duplicates was met or exceeded for all analyses (see Table 5-11).

5.7.1.2 Results and Evaluation of DQOs

The validated results of the duplicate samples were used to calculate the RPDs; these RPD values were used to evaluate combined field and analytical precision. Values for RPD were calculated using the following equation:

$$RPD = \left[\frac{|A - B|}{\left(\frac{A + B}{2}\right)}\right] x\ 100$$

where: A = the primary field sample concentration
B = the duplicate sample concentration

Analytical values at or near the contract required quantitation limit (CRQL) are typically subject to a greater variation when evaluated on a percentage basis due to limitations of analytical reporting and the formula for calculating RPD. Therefore, RPD values calculated using results near the CRQL are large and sometimes misleading when evaluating data quality. For example, values for 2-butanone of 3 μg/L and 4 μg/L give an RPD of 28 percent, which is outside of the acceptance criterion. These values are not significantly different, and using either value would not change an interpretation concerning water quality. Also, since the purpose of calculating RPDs for field duplicates is to determine field and laboratory precision, calculation of RPDs for samples where contamination has

been detected in an associated blank sample (resulting in validation blank qualifier) would interfere with a direct measurement of precision. Data with the laboratory qualifier "E" (indicates interference when used for reporting inorganic analyses) or the validation qualifiers "R" (unusable data) and "J-V" (estimated result-verification lacking) are also inappropriate for determining precision (see Table 5-1 for explanation of all qualifiers). To avoid nonrepresentative values, RPD values were not calculated for field duplicate samples for VOCs and SVOCs results where:

- Both results were less than 5 times the CRQL, or
- One or both results were qualified with a "B," "R," or "J-V"

RPD values were not calculated for field duplicate samples for TPH-P or TPH-E analyses where:

- Both results were less than 5 times the reporting limit, or
- One or both results were qualified with a "B," "R," or "J-V," or
- Results were for nontarget hydrocarbons ("other light" and "other heavy")

RPD values were not calculated for field duplicate samples for total and dissolved metals analyses where one or both values were qualified with a "B" (less than the contract required detection limit [CRDL], greater than instrument detection limit [IDL]), "E," "J-V," or "R." RPD values were not calculated for field duplicates for major anion analyses where both values were less than 5 times the reporting limit.

The goal of less than 25-percent RPD was met for all analyses of all field duplicates with the exception of aluminum in the total metals (MW10-09 and corresponding duplicate sample MW10-98). All other duplicate samples analyzed were within the 25-percent RPD control limit.

5.7.1.3 Validation Procedures

Field duplicates were evaluated after validation. As stated in the guidelines for data validation (EPA 1988, 1991), field sample results are not qualified based on field duplicate results alone; qualification resulting from field duplicates is determined by the validator based on the assessment of all laboratory and field QC results. Although precision goals were not met for all calculated RPDs for field duplicates associated with samples collected during the March 1994 quarterly event, qualification resulting from unacceptable field duplicate results was not necessary.

duplicates associated with samples collected during the March 1994 quarterly event, qualification resulting from unacceptable field duplicate results was not necessary.

5.7.2 Matrix Spike and Matrix Spike Duplicate Samples

The precision and accuracy of an analytical method for a particular environmental sample matrix is determined by analyzing two samples to which have been added an equal and known concentration of a target analyte. These samples, the MS and MSD, are collected in the field to be representative of a real sample matrix. The recoveries of the spiked analytes from the MS/MSD samples measure the accuracy of the analytical method for those analytes. RPD values for the MS/MSD pair are calculated to evaluate the analytical precision of the method.

MS/MSD samples were to be collected for 5 percent of the total number of samples collected. The acceptance criteria for recoveries and RPDs were established by the analytical procedures for CLP methods and by laboratory-established control limits for non-CLP methods. Acceptable recoveries and RPDs have been established for each target analyte (EPA 1990a,b).

5.7.2.1 Fulfillment of QC Sampling Objectives

The QC sampling objective for MS samples was 5 percent of the total number of samples. Table 5-11 presents the percent fulfillment.

5.7.2.2 Results and Evaluation of DQOs

The MS/MSD results for metals were evaluated using guidance from the EPA (1988). Because of the complexity of the rules used to qualify data based on MS/MSD recoveries, these rules are summarized below:

- No qualification is necessary when the recovery is between 75 percent and 125 percent.
- Estimate positive results (J-N) and nondetected results (UJ-N) are indicated when the recovery is between 30 percent and 74 percent.
- Estimate positive results (J-N) and reject nondetected results (R) are indicated when the MS recovery is less than 30 percent.

- Estimate positive results (J-N) are indicated when the recovery is greater than 125 percent (nondetected results are not affected).

In general, the majority of the MS recoveries were within QC acceptance criteria. Silver was the analyte that most commonly did not meet this criteria and resulted in data being rejected. Aluminum, selenium, and thallium are qualified due to poor percent recovery. All metals results have been validated and qualified appropriately.

5.7.2.3 Validation Procedures

The validators used the EPA functional guidelines (EPA 1988, 1991) to determine the %Rs and RPDs that were outside of the acceptance criteria, and the results for the associated samples were qualified appropriately. The results of organic analyses are not qualified solely on MS/MSD results; however, this information is used in conjunction with other QC criteria to evaluate the overall quality of the data. In contrast, the metals data are directly affected during validation by the results of the MS samples.

5.7.3 Laboratory Method Blanks

A method blank consists of laboratory pure water and all reagents used in the analytical procedures. A method blank is prepared and processed in the same manner as a field sample. Method blanks are analyzed to determine if laboratory procedures, equipment, or reagents introduce contamination that might affect the analytical results for field samples.

The frequency of analysis of method blanks is determined by the laboratory based on guidance provided for each CLP method (EPA 1990a,b). The acceptance criterion for method blank results is for all reported values to be less than the CRQL for each organic analyte of interest, and less than the CRDL for each inorganic analyte.

5.7.3.1 Fulfillment of QC Analytical Objectives

The evaluation of laboratory compliance with established guidance for the frequency of analysis of method blanks was conducted by the validators. The validators determined that the laboratory fulfilled the analytical objectives.

5.7.3.2 Results and Evaluation of DQOs

Method blank results are evaluated for organic analyses (VOCs, TPH-P, TPH-E, SVOCs, and OC pesticides/PCBs), but because of the number of method blanks and complexity of reporting, method blank results are not discussed for dissolved and total metals analyses. (Note: The validators did, however, consider method blanks for review of metals analyses.) Reportable concentrations are those values reported at concentrations greater than the CRQL and values reported at estimated concentrations less than the CRQL (designated with a "J" qualifier by the laboratory). There were no reportable concentrations greater than the CRQL.

5.7.3.3 Validation Procedures

All field samples associated with these method blanks were qualified appropriately by the validators using the EPA functional guidelines (EPA 1988, 1991) for inorganic and organic analyses. Results for any associated field blank (trip blank or equipment rinsate) are not changed as a result of detections in method blanks. If a compound was detected in a method blank, the following process was used for organic analyses to qualify data for field samples:

- If the compound is a common laboratory contaminant (CLC), which includes methylene chloride, acetone, 2-butanone, and common phthalate esters (EPA 1991), and the concentration in the associated field sample is less than the CRQL and less than 10 times the concentration in the method blank, then the concentration reported for the field sample is changed to the CRQL and is qualified with a "U-B." If the concentration in the associated field sample is greater than the CRQL and is less than 10 times the concentration in the method blank, then the concentration reported for the field sample remains the same and is qualified with a "UJ-B." If the concentration of the compound is greater than 10 times the concentration in the method blank, then the concentration reported for the field sample remains the same and is not qualified. This is referred to as the "10 Times Rule" (EPA 1991).

- If the compound is not identified by EPA as a CLC, then the same procedures and qualifiers are used, but a 5 times concentration criterion is applied. For example, if contamination is noted in a method blank and the concentration in the associated field sample is less than the CRQL and less than 5 times the concentration in the method blank, then the concentration in the associated sample is changed to the CRQL and is qualified with a "U-B." This is referred to as the "5 Times Rule" (EPA 1991).

5.7.4 Trip Blank Samples

Trip blanks are prepared in 40mL vials that are completely filled with purged, deionized, organic-free water. Trip blanks are transported to the site with the empty sample containers and stored at the site until the field samples for VOCs analyses are collected. The trip blanks are then placed with the field samples in coolers for storage and transportation to the laboratory for analysis to determine if field storage and transportation procedures introduced contamination to field samples. The QC sarnpling objective was for each cooler used to store and transport field samples to the laboratory for VOCs analyses to contain one trip blank. The DQO for trip blank results was that all values were to have remained below the CRQL for each analyte of interest.

5.7.4.1 Fulfillment of QC Sampling Objectives

A total of seven coolers were used to store and transport samples to the laboratory and seven trip blanks were analyzed for CLP VOA (Table 5-11). Therefore, the QC sampling objective for trip blanks was 100-percent fulfilled.

5.7.4.2 Results and Evaluation of DQOs

Four of the seven trip blanks analyzed contained reportable VOC concentrations. There were five detections of three compounds: methylene chloride, acetone, and benzene. All of these detections were at or below the CRQL. Due to RFs below RF minimums, results for bromoform and 1,1,2,2-tetrachloroethane were qualified as unusable in four samples.

5.7.4.3 Validation Procedures

The validation procedure for trip blanks is similar to that for a laboratory method blank except that the associated samples for a trip blank are those samples that were stored and shipped in the cooler with the trip blank.

5.7.5 Results of Equipment Rinsate Blanks

Equipment rinsate samples are collected and analyzed to determine if equipment cleaning and decontamination procedures are effective in removing contaminants that may have been present from the collection of field samples. Equipment rinsate samples are taken between collection of field samples, typically immediately before collection of a field sample.

5.7.5.1 Fulfillment of QC Sampling Objectives

The fulfillment of QC sampling objectives for equipment rinsates is summarized in Table 5-11. VOCs, SVOCs, TPH-P, and TPH-E were 100 percent fulfilled. Equipment rinsates were not analyzed for total or dissolved metals, pesticides/PCBs, major anions, organic lead, TOC, nitrate/nitrite, BOD, or heterotrophic plate count.

5.7.5.2 Results and Evaluation of DQOs

There were three detections of one analyte above CRQL in TPH-G, six detections of five analytes above CRQL in VOCs, and one detection of bis(2-ethylhexyl)phthalate above CRQL in SVOCs. Results of equipment blank analyses are presented in Table 5-10.

5.7.5.3 Validation Procedures

The validation procedure for equipment rinsate blanks is similar to that for a laboratory method blank except that the associated samples for an equipment rinsate blank are those samples collected for dissolved metals using the same filter apparatus on the same day that the equipment rinsate blank was collected.

5.7.6 Quarterly Data Completeness Summary

Completeness is a measure of the percentage of project-specified data that are deemed valid. All data that were not rejected ("R"-qualified data) through the validation process were deemed valid. All data met the DQO of 95-percent completeness.

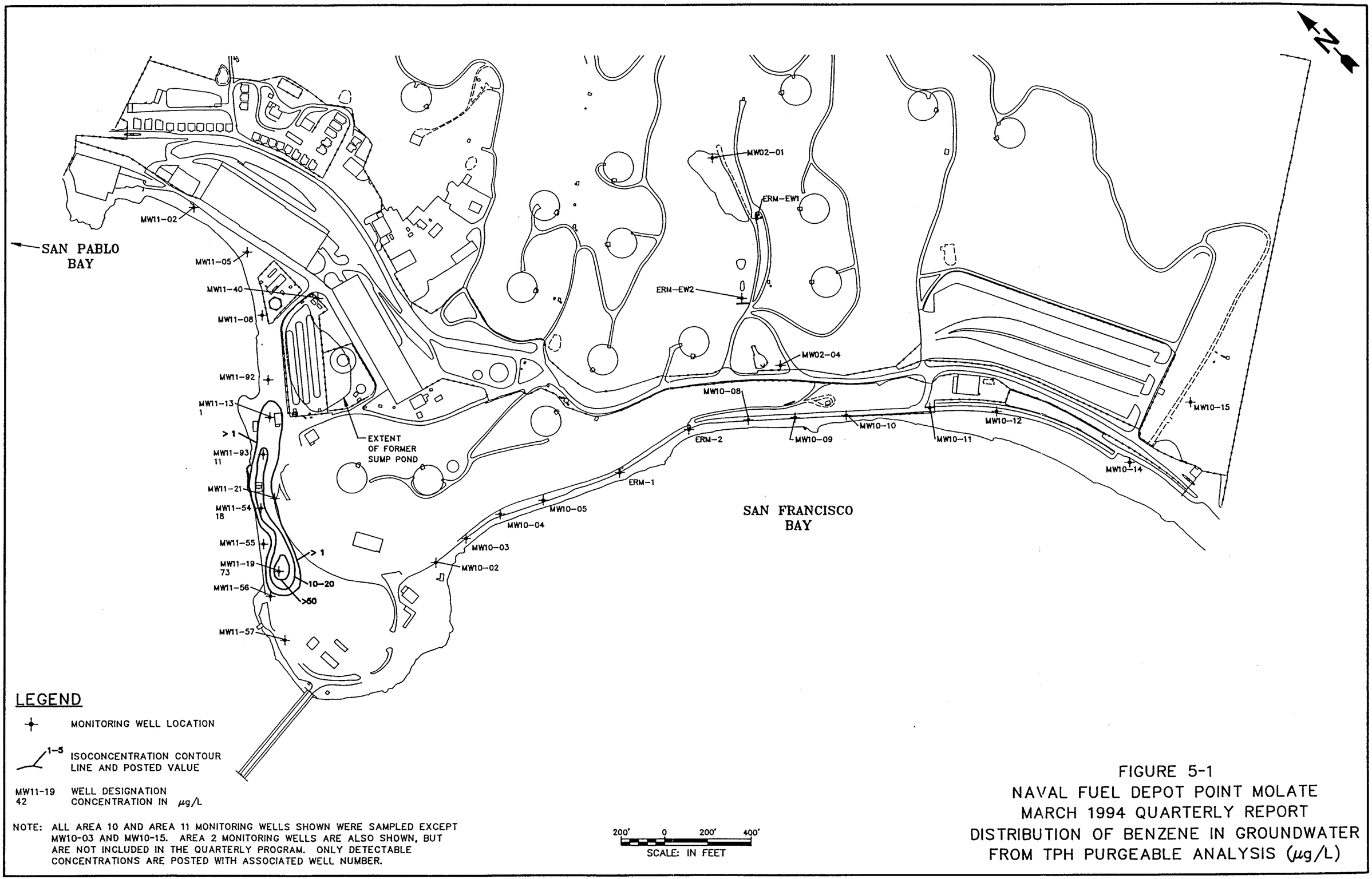

NOTE: ALL AREA 10 AND AREA 11 MONITORING WELLS SHOWN WERE SAMPLED EXCEPT MW10-03 AND MW10-15. AREA 2 MONITORING WELLS ARE ALSO SHOWN, BUT ARE NOT INCLUDED IN THE QUARTERLY PROGRAM. ONLY DETECTABLE CONCENTRATIONS ARE POSTED WITH ASSOCIATED WELL NUMBER.

FIGURE 5-1
NAVAL FUEL DEPOT POINT MOLATE
MARCH 1994 QUARTERLY REPORT
DISTRIBUTION OF BENZENE IN GROUNDWATER
FROM TPH PURGEABLE ANALYSIS (µg/L)

FILE NAME: D:\PM\PMBASE1.DWG
DATE: 08/22/94 JJH DN

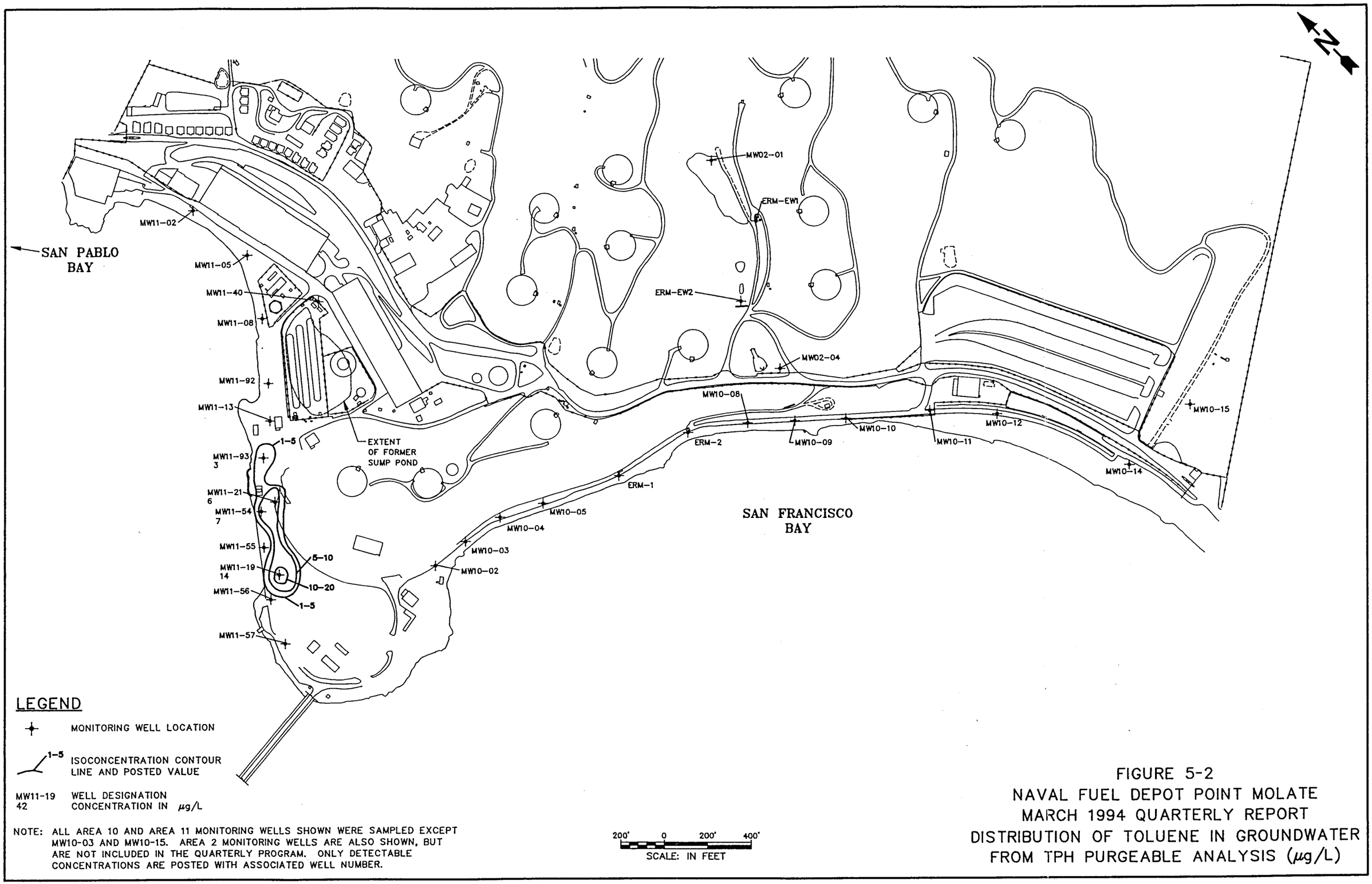

NOTE: ALL AREA 10 AND AREA 11 MONITORING WELLS SHOWN WERE SAMPLED EXCEPT MW10-03 AND MW10-15. AREA 2 MONITORING WELLS ARE ALSO SHOWN, BUT ARE NOT INCLUDED IN THE QUARTERLY PROGRAM. ONLY DETECTABLE CONCENTRATIONS ARE POSTED WITH ASSOCIATED WELL NUMBER.

FIGURE 5-2
NAVAL FUEL DEPOT POINT MOLATE
MARCH 1994 QUARTERLY REPORT
DISTRIBUTION OF TOLUENE IN GROUNDWATER
FROM TPH PURGEABLE ANALYSIS (µg/L)

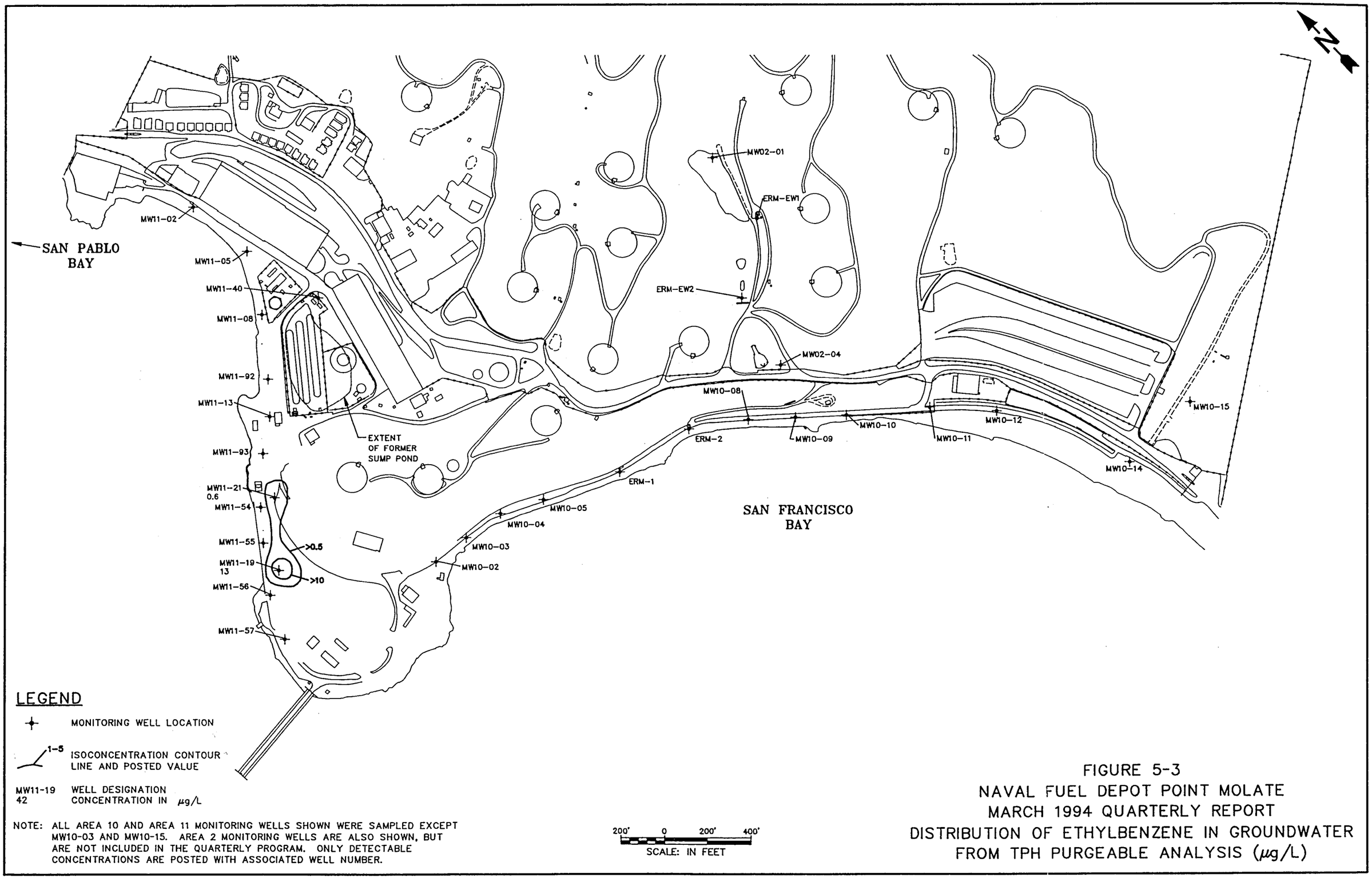

NOTE: ALL AREA 10 AND AREA 11 MONITORING WELLS SHOWN WERE SAMPLED EXCEPT MW10-03 AND MW10-15. AREA 2 MONITORING WELLS ARE ALSO SHOWN, BUT ARE NOT INCLUDED IN THE QUARTERLY PROGRAM. ONLY DETECTABLE CONCENTRATIONS ARE POSTED WITH ASSOCIATED WELL NUMBER.

FIGURE 5-3
NAVAL FUEL DEPOT POINT MOLATE
MARCH 1994 QUARTERLY REPORT
DISTRIBUTION OF ETHYLBENZENE IN GROUNDWATER
FROM TPH PURGEABLE ANALYSIS (µg/L)

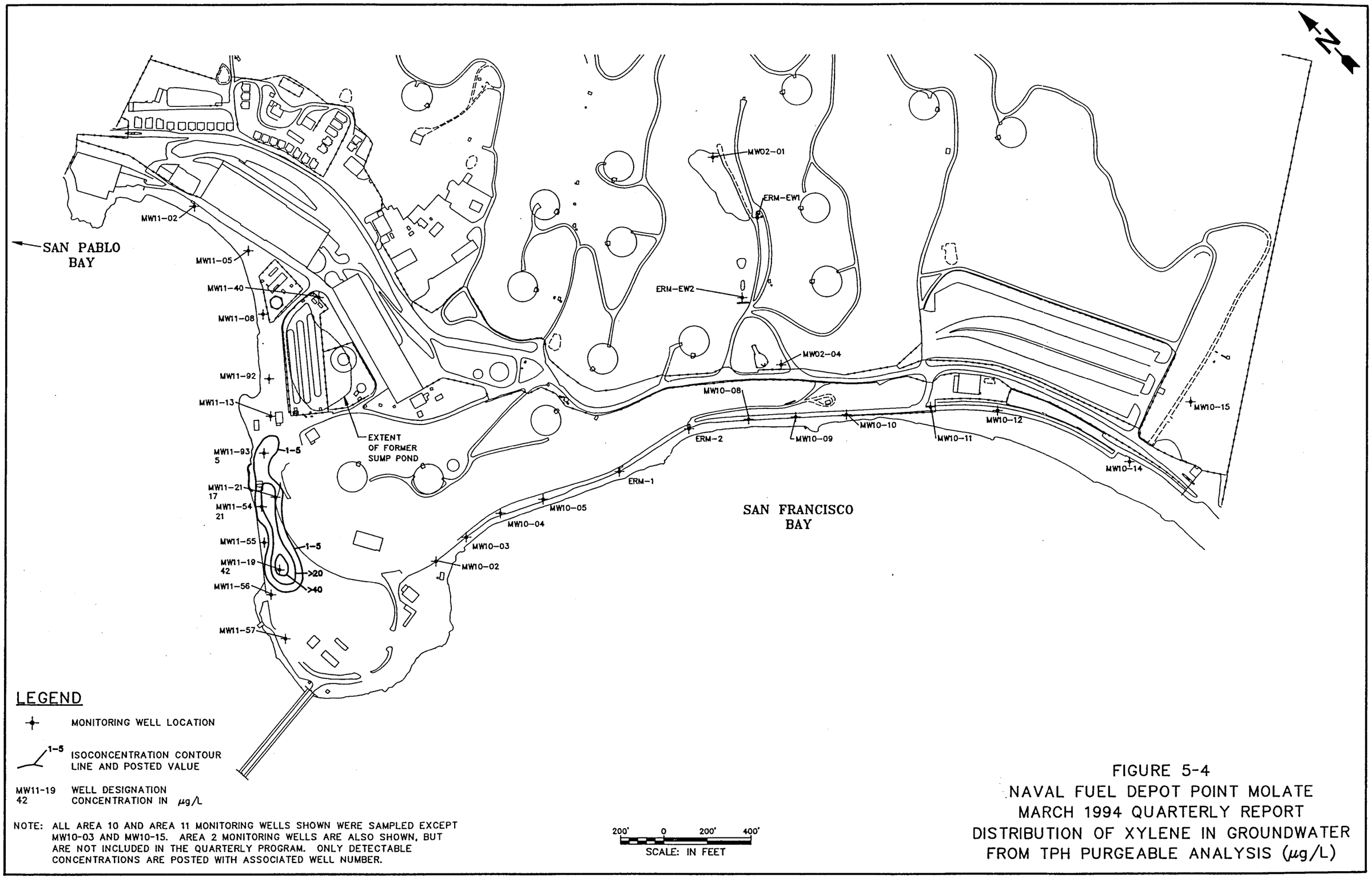

NOTE: ALL AREA 10 AND AREA 11 MONITORING WELLS SHOWN WERE SAMPLED EXCEPT MW10-03 AND MW10-15. AREA 2 MONITORING WELLS ARE ALSO SHOWN, BUT ARE NOT INCLUDED IN THE QUARTERLY PROGRAM. ONLY DETECTABLE CONCENTRATIONS ARE POSTED WITH ASSOCIATED WELL NUMBER.

FIGURE 5-4
NAVAL FUEL DEPOT POINT MOLATE
MARCH 1994 QUARTERLY REPORT
DISTRIBUTION OF XYLENE IN GROUNDWATER
FROM TPH PURGEABLE ANALYSIS (μg/L)

DATE: 06/22/94 JLH DN FILE NAME: D:\PM\PMBASE1.DWG

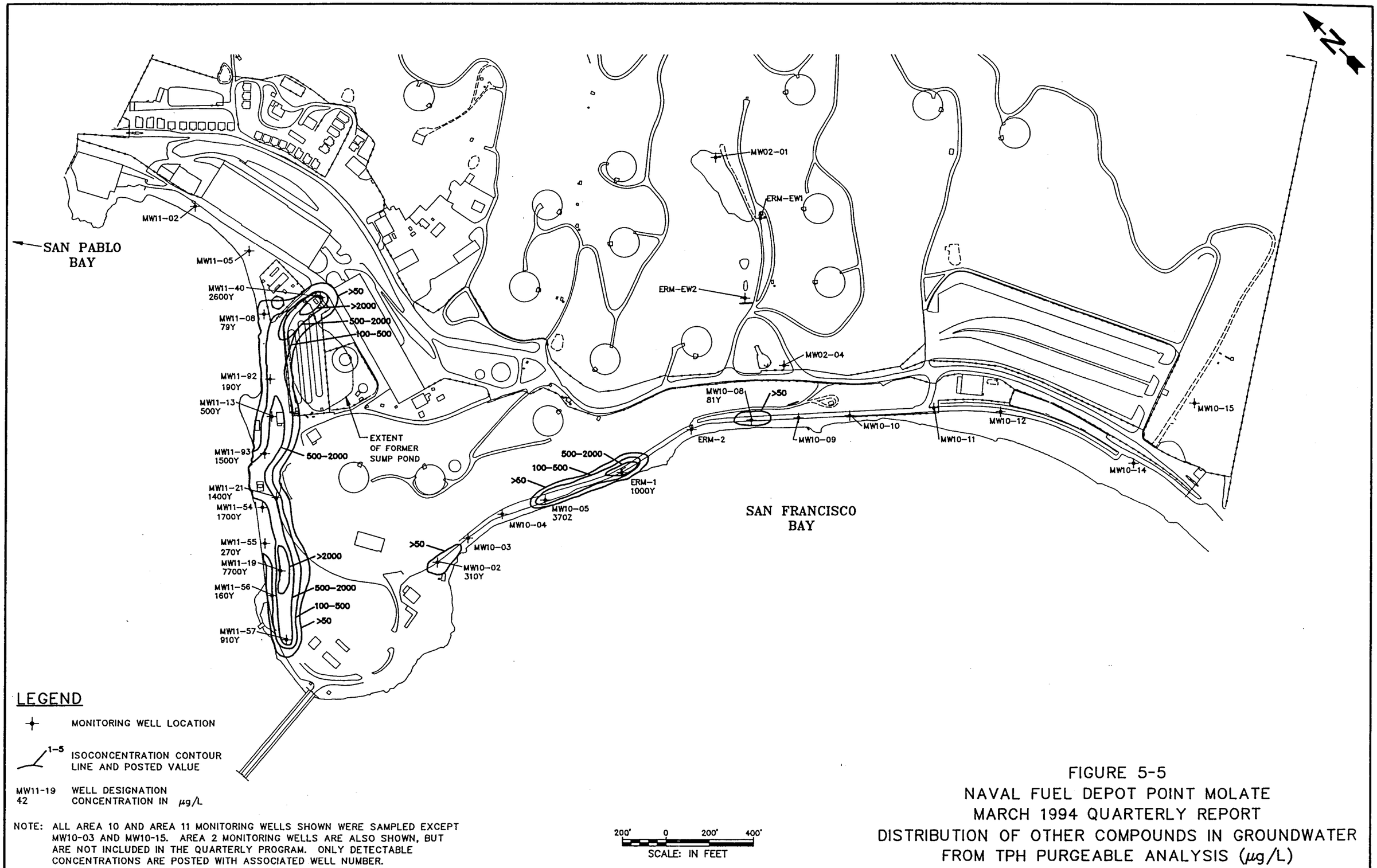

NOTE: ALL AREA 10 AND AREA 11 MONITORING WELLS SHOWN WERE SAMPLED EXCEPT MW10-03 AND MW10-15. AREA 2 MONITORING WELLS ARE ALSO SHOWN, BUT ARE NOT INCLUDED IN THE QUARTERLY PROGRAM. ONLY DETECTABLE CONCENTRATIONS ARE POSTED WITH ASSOCIATED WELL NUMBER.

FIGURE 5-5
NAVAL FUEL DEPOT POINT MOLATE
MARCH 1994 QUARTERLY REPORT
DISTRIBUTION OF OTHER COMPOUNDS IN GROUNDWATER
FROM TPH PURGEABLE ANALYSIS (µg/L)

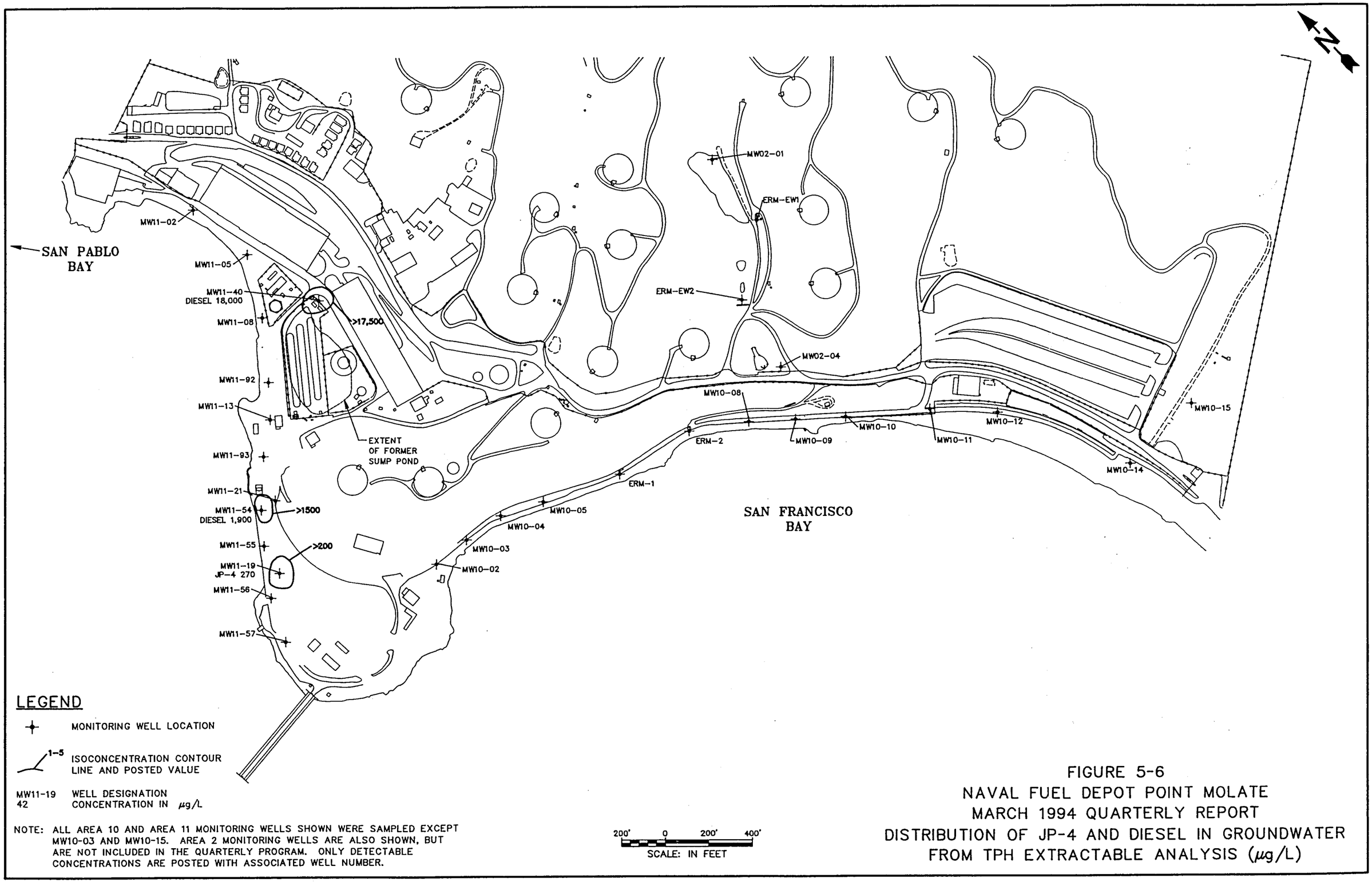

NOTE: ALL AREA 10 AND AREA 11 MONITORING WELLS SHOWN WERE SAMPLED EXCEPT MW10-03 AND MW10-15. AREA 2 MONITORING WELLS ARE ALSO SHOWN, BUT ARE NOT INCLUDED IN THE QUARTERLY PROGRAM. ONLY DETECTABLE CONCENTRATIONS ARE POSTED WITH ASSOCIATED WELL NUMBER.

FIGURE 5-6
NAVAL FUEL DEPOT POINT MOLATE
MARCH 1994 QUARTERLY REPORT
DISTRIBUTION OF JP-4 AND DIESEL IN GROUNDWATER FROM TPH EXTRACTABLE ANALYSIS (μg/L)

DATE: 06/22/94 JJH DN FILE NAME: D:\PW\PMBASE1.DWG

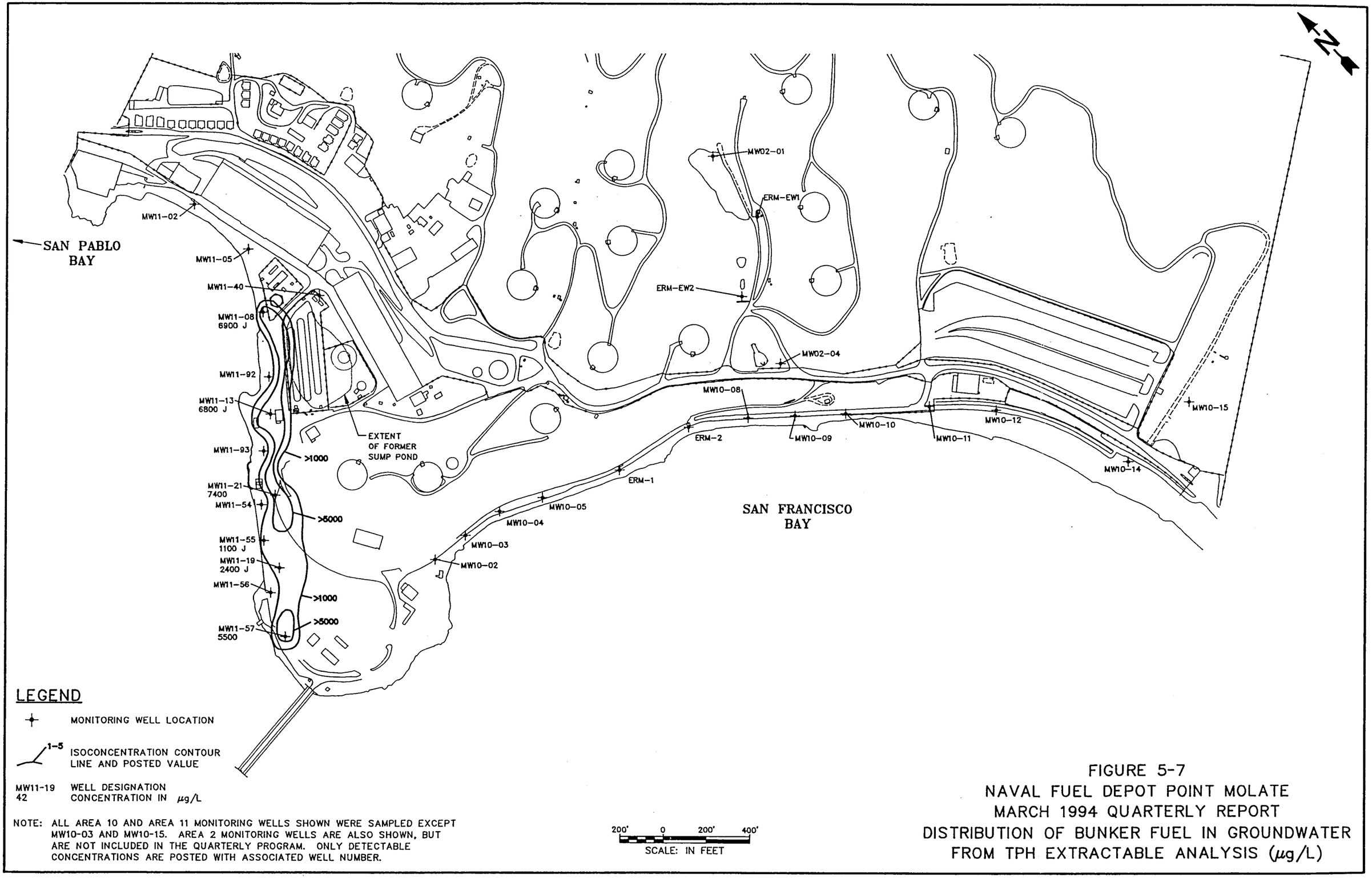

NOTE: ALL AREA 10 AND AREA 11 MONITORING WELLS SHOWN WERE SAMPLED EXCEPT MW10-03 AND MW10-15. AREA 2 MONITORING WELLS ARE ALSO SHOWN, BUT ARE NOT INCLUDED IN THE QUARTERLY PROGRAM. ONLY DETECTABLE CONCENTRATIONS ARE POSTED WITH ASSOCIATED WELL NUMBER.

FIGURE 5-7
NAVAL FUEL DEPOT POINT MOLATE
MARCH 1994 QUARTERLY REPORT
DISTRIBUTION OF BUNKER FUEL IN GROUNDWATER
FROM TPH EXTRACTABLE ANALYSIS (μg/L)

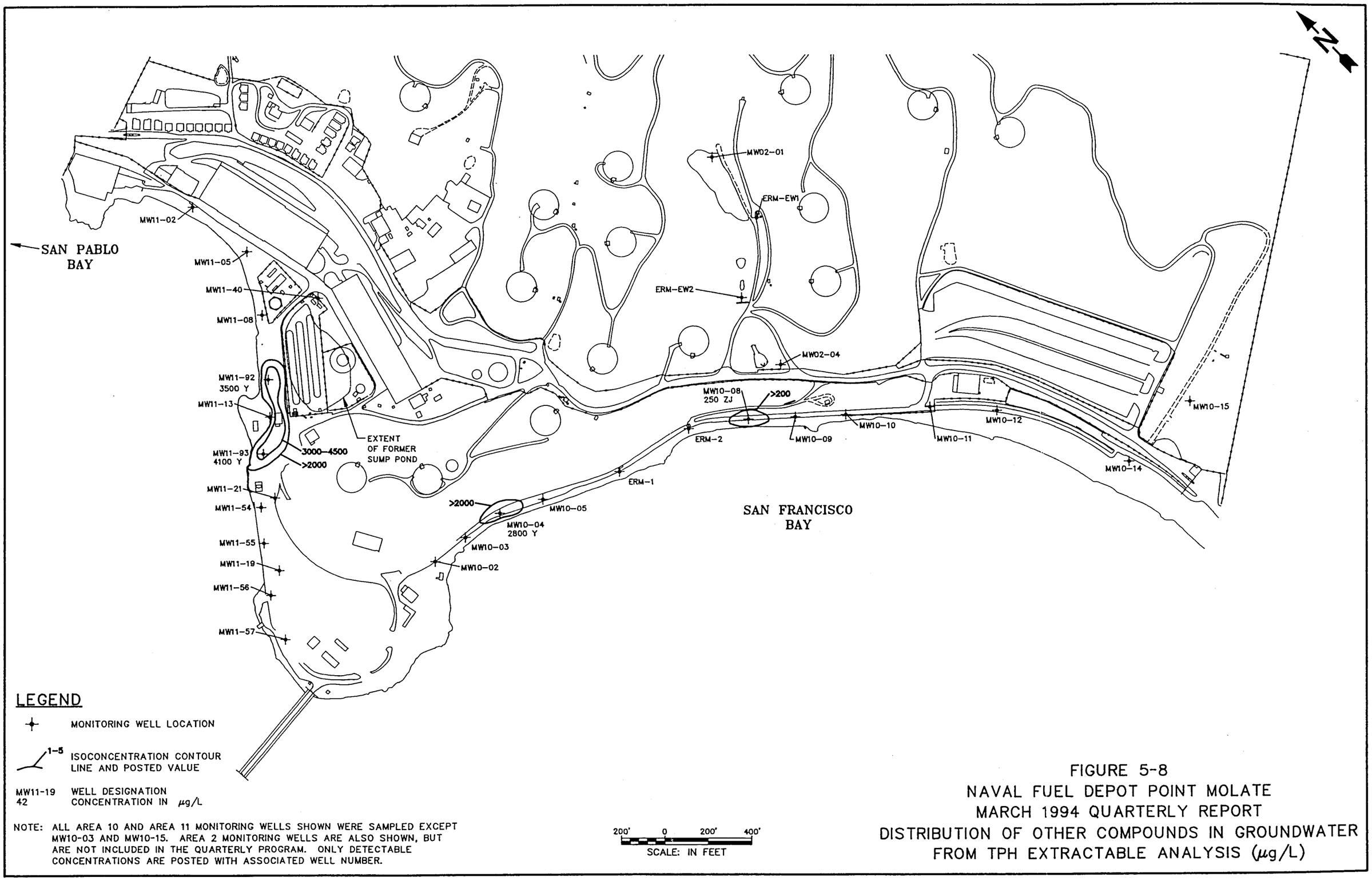

NOTE: ALL AREA 10 AND AREA 11 MONITORING WELLS SHOWN WERE SAMPLED EXCEPT MW10-03 AND MW10-15. AREA 2 MONITORING WELLS ARE ALSO SHOWN, BUT ARE NOT INCLUDED IN THE QUARTERLY PROGRAM. ONLY DETECTABLE CONCENTRATIONS ARE POSTED WITH ASSOCIATED WELL NUMBER.

FIGURE 5-8
NAVAL FUEL DEPOT POINT MOLATE
MARCH 1994 QUARTERLY REPORT
DISTRIBUTION OF OTHER COMPOUNDS IN GROUNDWATER FROM TPH EXTRACTABLE ANALYSIS (μg/L)

DATE: 06/22/94 JLH DN FILE NAME: D:\PM\PMBASE1.DWG

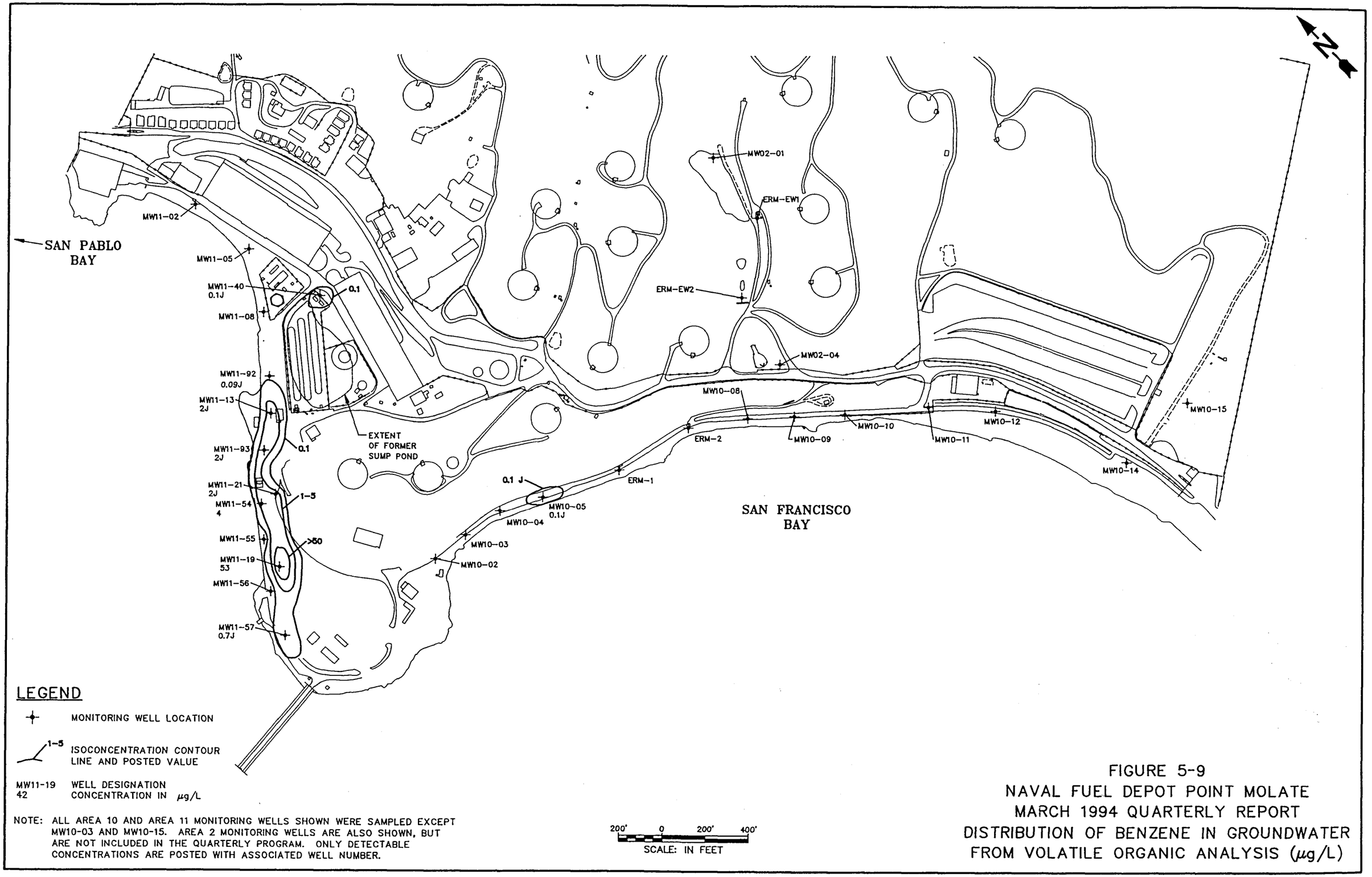

NOTE: ALL AREA 10 AND AREA 11 MONITORING WELLS SHOWN WERE SAMPLED EXCEPT MW10-03 AND MW10-15. AREA 2 MONITORING WELLS ARE ALSO SHOWN, BUT ARE NOT INCLUDED IN THE QUARTERLY PROGRAM. ONLY DETECTABLE CONCENTRATIONS ARE POSTED WITH ASSOCIATED WELL NUMBER.

FIGURE 5-9
NAVAL FUEL DEPOT POINT MOLATE
MARCH 1994 QUARTERLY REPORT
DISTRIBUTION OF BENZENE IN GROUNDWATER
FROM VOLATILE ORGANIC ANALYSIS (μg/L)

DATE: 06/22/94 JJH DN FILE NAME: D:\PW\PMBASE1.DWG

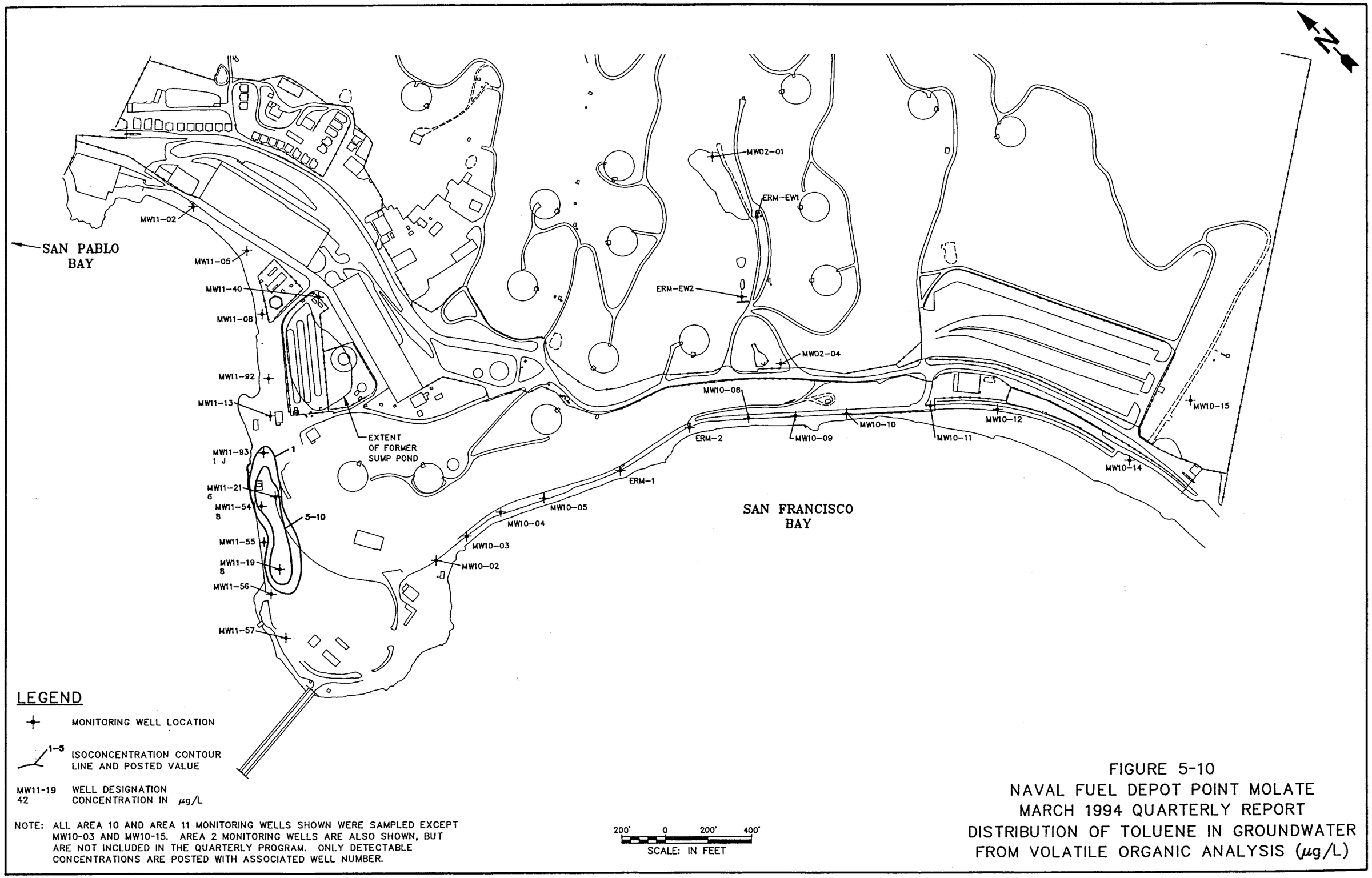

NOTE: ALL AREA 10 AND AREA 11 MONITORING WELLS SHOWN WERE SAMPLED EXCEPT MW10-03 AND MW10-15. AREA 2 MONITORING WELLS ARE ALSO SHOWN, BUT ARE NOT INCLUDED IN THE QUARTERLY PROGRAM. ONLY DETECTABLE CONCENTRATIONS ARE POSTED WITH ASSOCIATED WELL NUMBER.

FIGURE 5-10
NAVAL FUEL DEPOT POINT MOLATE
MARCH 1994 QUARTERLY REPORT
DISTRIBUTION OF TOLUENE IN GROUNDWATER
FROM VOLATILE ORGANIC ANALYSIS (µg/L)

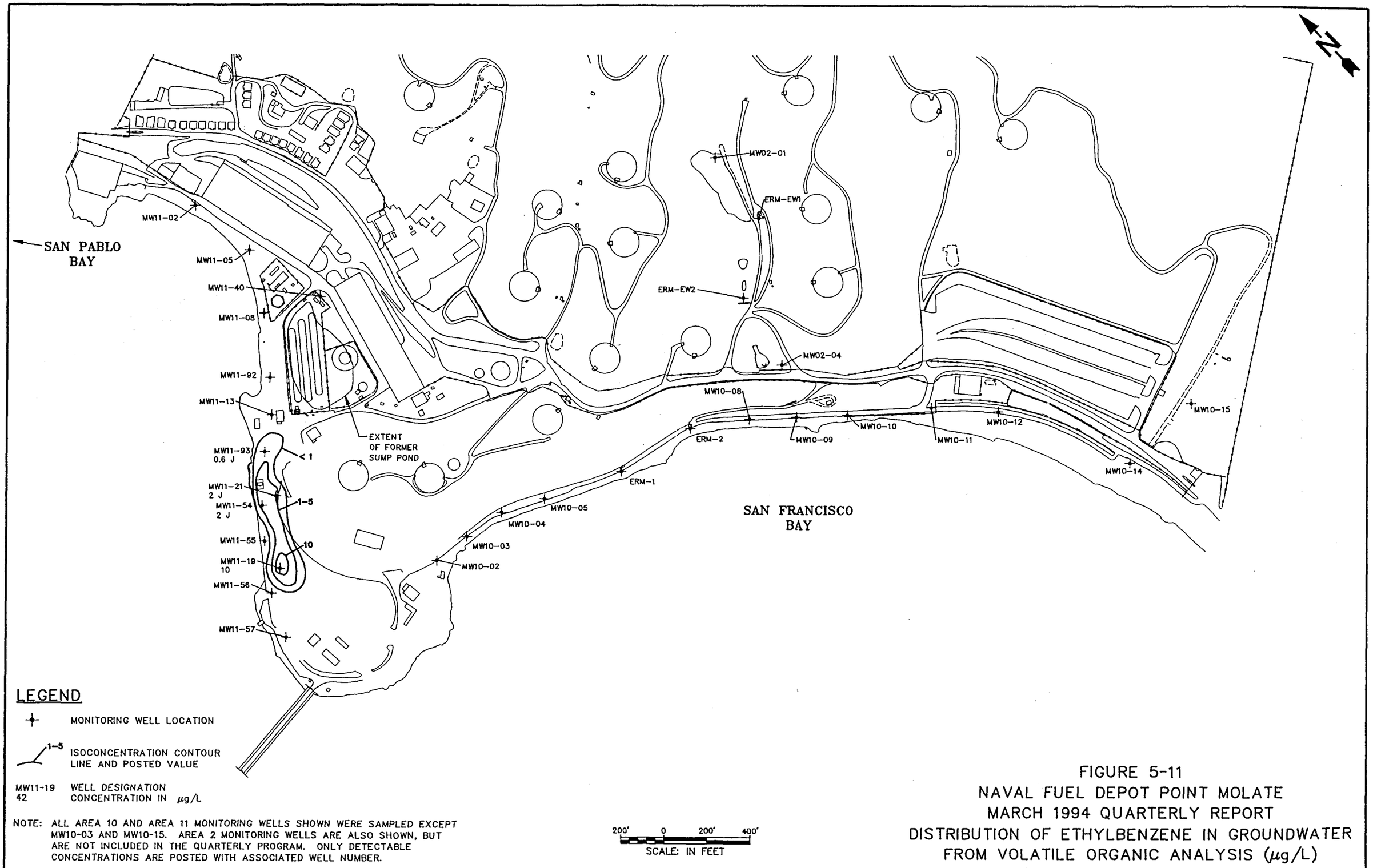

FIGURE 5-11
NAVAL FUEL DEPOT POINT MOLATE
MARCH 1994 QUARTERLY REPORT
DISTRIBUTION OF ETHYLBENZENE IN GROUNDWATER
FROM VOLATILE ORGANIC ANALYSIS (µg/L)

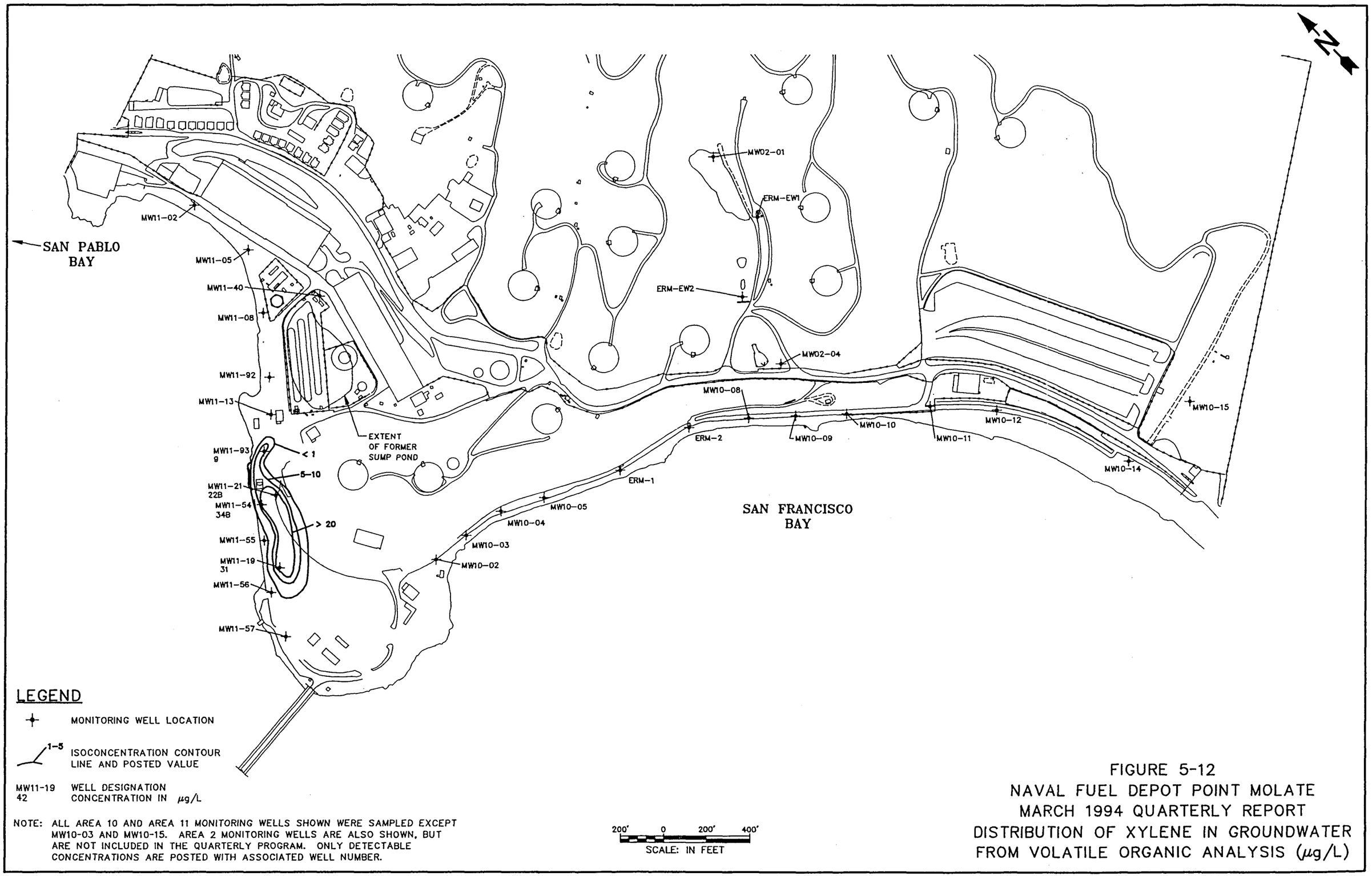

NOTE: ALL AREA 10 AND AREA 11 MONITORING WELLS SHOWN WERE SAMPLED EXCEPT MW10-03 AND MW10-15. AREA 2 MONITORING WELLS ARE ALSO SHOWN, BUT ARE NOT INCLUDED IN THE QUARTERLY PROGRAM. ONLY DETECTABLE CONCENTRATIONS ARE POSTED WITH ASSOCIATED WELL NUMBER.

FIGURE 5-12
NAVAL FUEL DEPOT POINT MOLATE
MARCH 1994 QUARTERLY REPORT
DISTRIBUTION OF XYLENE IN GROUNDWATER
FROM VOLATILE ORGANIC ANALYSIS (μg/L)

FILE NAME: D:\PM\PMBASE1.DWG
DATE: 06/22/94 JJH DN

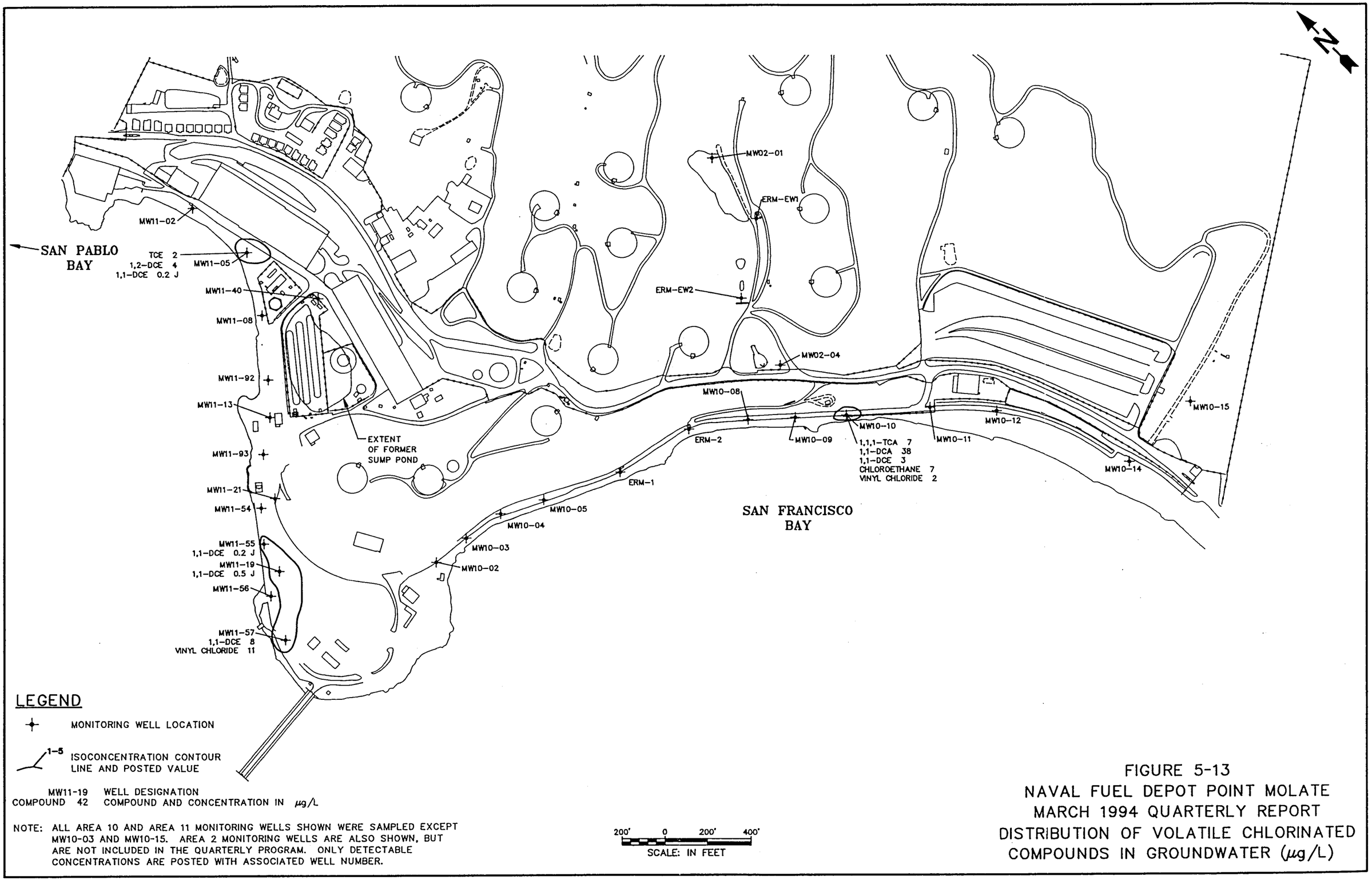

FIGURE 5-13
NAVAL FUEL DEPOT POINT MOLATE
MARCH 1994 QUARTERLY REPORT
DISTRIBUTION OF VOLATILE CHLORINATED COMPOUNDS IN GROUNDWATER (µg/L)

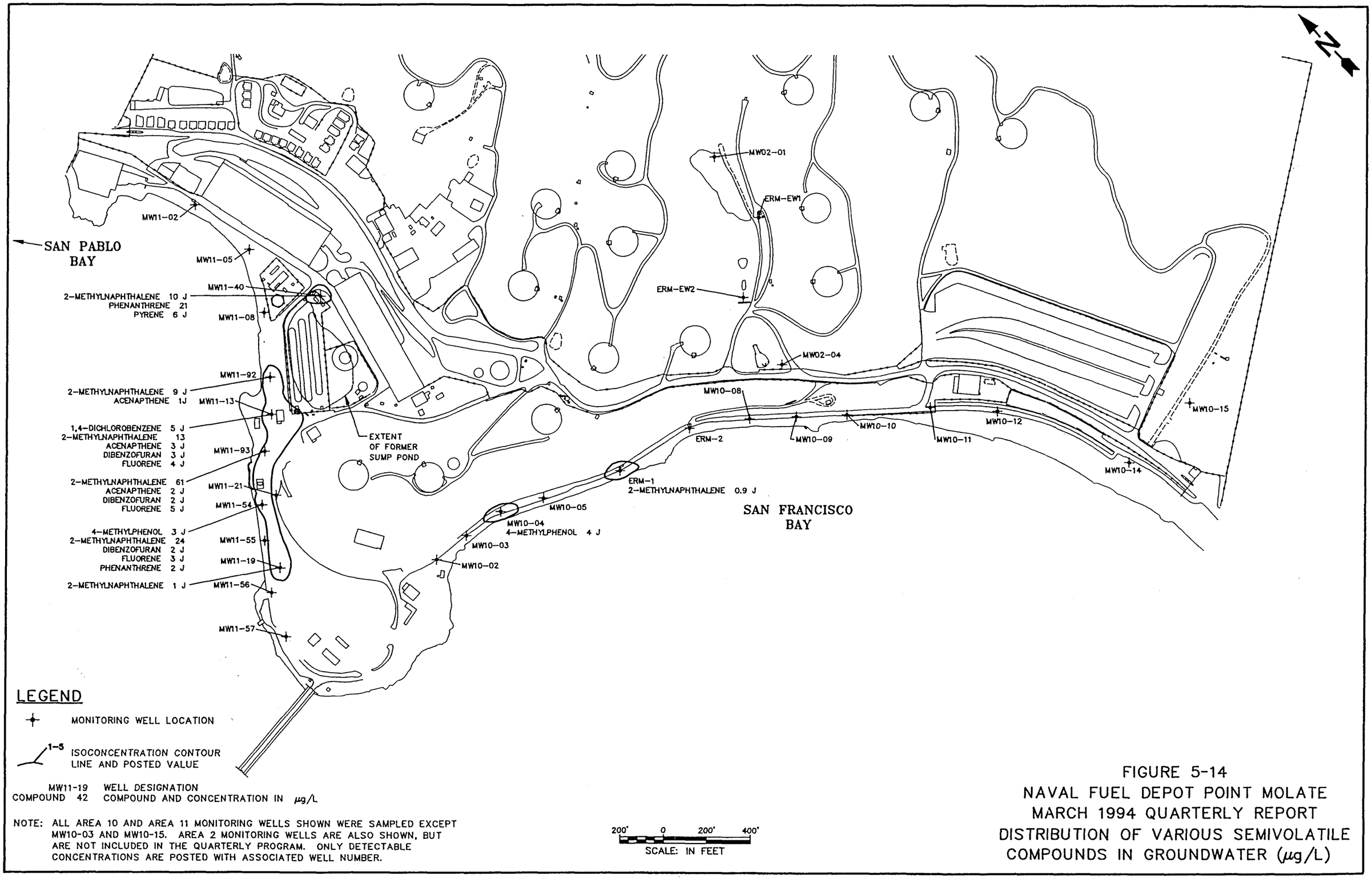

NOTE: ALL AREA 10 AND AREA 11 MONITORING WELLS SHOWN WERE SAMPLED EXCEPT MW10-03 AND MW10-15. AREA 2 MONITORING WELLS ARE ALSO SHOWN, BUT ARE NOT INCLUDED IN THE QUARTERLY PROGRAM. ONLY DETECTABLE CONCENTRATIONS ARE POSTED WITH ASSOCIATED WELL NUMBER.

FIGURE 5-14
NAVAL FUEL DEPOT POINT MOLATE
MARCH 1994 QUARTERLY REPORT
DISTRIBUTION OF VARIOUS SEMIVOLATILE COMPOUNDS IN GROUNDWATER (µg/L)

DATE: 06/22/94 JLH DN FILE NAME: D:\PM\PMBASE1.DWG

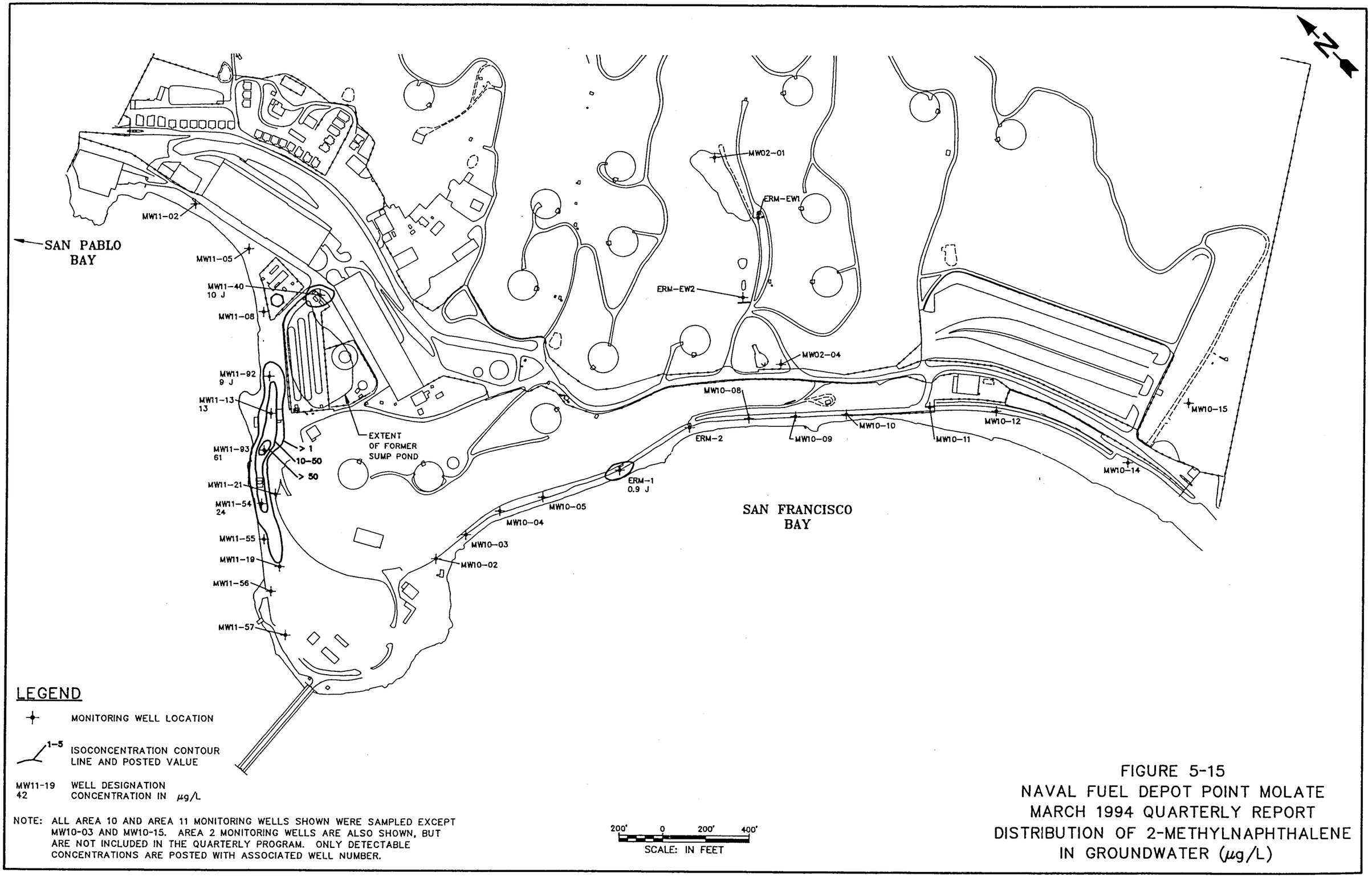

NOTE: ALL AREA 10 AND AREA 11 MONITORING WELLS SHOWN WERE SAMPLED EXCEPT MW10-03 AND MW10-15. AREA 2 MONITORING WELLS ARE ALSO SHOWN, BUT ARE NOT INCLUDED IN THE QUARTERLY PROGRAM. ONLY DETECTABLE CONCENTRATIONS ARE POSTED WITH ASSOCIATED WELL NUMBER.

FIGURE 5-15
NAVAL FUEL DEPOT POINT MOLATE
MARCH 1994 QUARTERLY REPORT
DISTRIBUTION OF 2-METHYLNAPHTHALENE
IN GROUNDWATER (µg/L)

FILE NAME: D:\PM\PMBASE1.DWG
JJH DN
DATE: 08/22/94

TABLE 5-1

NAVAL FUEL DEPOT POINT MOLATE
MARCH 1994 QUARTERLY GROUNDWATER SAMPLING
SUMMARY OF TPH DETECTION FREQUENCY AND CONCENTRATIONS

Analytes	Detection Frequency	Previous Range of Detected Concentration, 1992 (μg/L)	Range of Detected Concentration, March 1994 (μg/L)
TPH Purgeable			
Benzene	4 of 24	0.9 - 23	1 - 73
Toluene	4 of 24	2 - 16	3 - 14
Ethylbenzene	2 of 24	3 - 6	0.6 - 13
Total Xylenes	4 of 24	0.8 - 38	5 - 42
Gasoline	0 of 24	0.8 - 38	ND
Other Compounds	14(Y) of 24 1(Z) of 24	NA	79 - 7,700 370
TPH Extractable			
JP-4 (C7-C18)	1 of 24	NA	270
JP-5 (C8-C16)	0 of 24	3,200 - 41,000	ND
Diesel F76 (C8-C28)	2 of 24	420 - 4,100	1,900 -18,000
Weathered Diesel (C8-C26)	1 of 24	NA	1,300
Bunker Fuel (C10-C28)	6 of 24	600 - 50,000[1]	1,100 - 7,400
Other Components	3(Y) of 24 2(Z) of 24	NA	2,800 - 4,100 180 - 250

[1] Quantitated against motor oil in 1992 data

NA Previous (1992) data not quantitated against these standards

ND Not detected

TABLE 5-2

NAVAL FUEL DEPOT POINT MOLATE
MARCH 1994 QUARTERLY GROUNDWATER SAMPLING
DETECTED VOCS

PRC Sample ID	Detection Frequency	Concentration Range	MW11-02 (26.0)	MW11-05 (22.0)	MW11-08 (22.0)	MW11-40 (17.0)	MW11-92 (19.0)
Vinyl chloride	2 of 23	2 - 11	ND	ND	ND	ND	ND
Chloroethane	1 of 23	7	ND	ND	ND	ND	ND
Methylene chloride	2 of 23	0.4 - 1	0.9 J	ND	ND	ND	ND
Acetone	4 of 23	0.5 - 32	ND	ND	ND	ND	ND
Carbon Disulfide	3 of 23	0.05 - 0.5	ND	ND	ND	ND	ND
1,1-Dichloroethene	2 of 23	0.2 - 3	ND	0.2 J	ND	ND	ND
1,2-Dichloroethene	4 of 23	0.2 - 8	ND	4	ND	ND	ND
Chloroform	1 of 23	6	ND	ND	ND	6	ND
2-Butanone	4 of 23	3 - 39	ND	ND	ND	ND	3
1,1,1-Trichloroethane	1 of 23	7	ND	ND	ND	ND	ND
Trichloroethene	1 of 23	2	ND	2	ND	ND	ND
Benzene	9 of 23	0.09 - 53	ND	ND	ND	0.1 J	0.09 J
Toluene	4 of 23	1 - 8	ND	ND	ND	ND	ND
Chlorobenzene	1 of 23	93	ND	ND	ND	ND	ND
Ethylbenzene	4 of 23	.06 - 10	ND	ND	ND	ND	ND
Xylene	4 of 23	0.9 - 34	ND	ND	ND	ND	ND

TABLE 5-2 (Continued)

NFD POINT MOLATE
MARCH 1994 QUARTERLY GROUNDWATER SAMPLING
DETECTED VOCS

PRC Sample ID	Detection Frequency	Concentration Range	MW11-13 (26.0)	MW11-93 (22.0)	MW11-54 (23.0)	MW11-21 (22.0)	MW11-55 (23.0)
Vinyl chloride	2 of 23	2 - 11	ND	ND	ND	ND	ND
Chloroethane	1 of 23	7	ND	ND	ND	ND	ND
Methylene chloride	2 of 23	0.4 - 1	1 J	ND	ND	ND	ND
Acetone	4 of 23	0.5 - 32	ND	ND	32	4	ND
Carbon Disulfide	3 of 23	0.05 - 0.5	ND	ND	ND	ND	0.05 J
1,1-Dichloroethene	2 of 23	0.2 - 3	ND	ND	ND	ND	ND
1,2-Dichloroethene	4 of 23	0.2 - 8	ND	ND	ND	ND	0.2 J
Chloroform	1 of 23	6	ND	ND	ND	ND	ND
2-Butanone	4 of 23	3 - 39	ND	23	26	ND	ND
1,1,1-Trichloroethane	1 of 23	7	ND	ND	ND	ND	ND
Trichloroethene	1 of 23	2	ND	ND	ND	ND	ND
Benzene	9 of 23	0.09 - 53	2 J	2 J	4	2 J	ND
Toluene	4 of 23	1 - 8	ND	1 J	8	6	ND
Chlorobenzene	1 of 23	93	93	ND	ND	ND	ND
Ethylbenzene	4 of 23	.06 - 10	ND	0.6 J	2 J	2 J	ND
Xylene	4 of 23	0.9 - 34	ND	9	34 B	22 B	ND

TABLE 5-2 (Continued)

NFD POINT MOLATE
MARCH 1994 QUARTERLY GROUNDWATER SAMPLING
DETECTED VOCS

PRC Sample ID	Detection Frequency	Concentration Range	MW11-19 (23.0)	MW11-56 (22.0)	MW11-57 (23.0)	MW10-04 (21.0)	MW10-05 (19.0)
Vinyl chloride	2 of 23	2 - 11	ND	ND	11	ND	ND
Chloroethane	1 of 23	7	ND	ND	ND	ND	ND
Methylene chloride	2 of 23	0.4 - 1	ND	ND	ND	ND	ND
Acetone	4 of 23	0.5 - 32	ND	ND	13	0.5 J	ND
Carbon Disulfide	3 of 23	0.05 - 0.5	ND	ND	ND	0.5 J	ND
1,1-Dichloroethene	2 of 23	0.2 - 3	ND	ND	ND	ND	ND
1,2-Dichloroethene	4 of 23	0.2 - 8	0.5 J	ND	8	ND	ND
Chloroform	1 of 23	6	ND	ND	ND	ND	ND
2-Butanone	4 of 23	3 - 39	ND	ND	ND	ND	ND
1,1,1-Trichloroethane	1 of 23	7	ND	ND	ND	ND	ND
Trichloroethene	1 of 23	2	ND	ND	ND	ND	ND
Benzene	9 of 23	0.09 - 53	53	ND	0.7 J	ND	0.1 J
Toluene	4 of 23	1 - 8	8	ND	ND	ND	ND
Chlorobenzene	1 of 23	93	ND	ND	ND	ND	ND
Ethylbenzene	4 of 23	.06 - 10	10	ND	ND	ND	ND
Xylene	4 of 23	0.9 - 34	31	ND	ND	ND	ND

TABLE 5-2 (Continued)

NFD POINT MOLATE
MARCH 1994 QUARTERLY GROUNDWATER SAMPLING
DETECTED VOCS

PRC Sample ID	Detection Frequency	Concentration Range	ERM10-01 (23.0)	ERM10-02 (19.0)	MW10-08 (24.0)	MW10-09 (19.0)	MW10-10 (21.0)
Vinyl chloride	2 of 23	2 - 11	ND	ND	ND	ND	2
Chloroethane	1 of 23	7	ND	ND	ND	ND	7
Methylene chloride	2 of 23	0.4 - 1	04J	ND	ND	ND	ND
Acetone	4 of 23	0.5 - 32	ND	ND	ND	ND	ND
Carbon Disulfide	3 of 23	0.05 - 0.5	ND	ND	ND	ND	ND
1,1-Dichloroethene	2 of 23	0.2 - 3	ND	ND	ND	ND	3
1,2-Dichloroethene	4 of 23	0.2 - 8	ND	ND	ND	ND	ND
Chloroform	1 of 23	6	ND	ND	ND	ND	ND
2-Butanone	4 of 23	3 - 39	39	ND	ND	ND	ND
1,1,1-Trichloroethane	1 of 23	7	ND	ND	ND	ND	7
Trichloroethene	1 of 23	2	ND	ND	ND	ND	ND
Benzene	9 of 23	0.09 - 53	ND	ND	ND	ND	ND
Toluene	4 of 23	1 - 8	ND	ND	ND	ND	ND
Chlorobenzene	1 of 23	93	ND	ND	ND	ND	ND
Ethylbenzene	4 of 23	.06 - 10	ND	ND	ND	ND	ND
Xylene	4 of 23	0.9 - 34	ND	ND	ND	ND	ND

TABLE 5-2 (Continued)

NFD POINT MOLATE
MARCH 1994 QUARTERLY GROUNDWATER SAMPLING
DETECTED VOCS

PRC Sample ID	Detection Frequency	Concentration Range	MW10-11 (21.0)	MW10-12 (18.0)	MW10-14 (19.0)
Vinyl chloride	2 of 23	2 - 11	ND	ND	ND
Chloroethane	1 of 23	7	ND	ND	ND
Methylene chloride	2 of 23	0.4 - 1	ND	ND	ND
Acetone	4 of 23	0.5 - 32	ND	ND	ND
Carbon Disulfide	3 of 23	0.05 - 0.5	0.05 J	ND	ND
1,1-Dichloroethene	2 of 23	0.2 - 3	ND	ND	ND
1,2-Dichloroethene	4 of 23	0.2 - 8	ND	ND	ND
Chloroform	1 of 23	6	ND	ND	ND
2-Butanone	4 of 23	3 - 39	ND	ND	ND
1,1,1-Trichloroethane	1 of 23	7	ND	ND	ND
Trichloroethene	1 of 23	2	ND	ND	ND
Benzene	9 of 23	0.09 - 53	ND	ND	ND
Toluene	4 of 23	1 - 8	ND	ND	ND
Chlorobenzene	1 of 23	93	ND	ND	ND
Ethylbenzene	4 of 23	.06 - 10	ND	ND	ND
Xylene	4 of 23	0.9 - 34	ND	ND	ND

J = The reported concentration was estimated
B = The analyte was also detected in the method blanks
ND = The parameter was not detected at or above the reporting limit

TABLE 5-3

NAVAL FUEL DEPOT POINT MOLATE
MARCH 1994 QUARTERLY GROUNDWATER SAMPLING
SUMMARY OF DETECTION FREQUENCY AND CONCENTRATIONS
SVOCs

PRC Sample ID	Detection Frequency	Concentration Range	MW11-02 (26.0)	MW11-05 (22.0)	MW11-08 (22.0)	MW11-40 (17.0)	MW11-92 (19.0)
4-Methylphenol	2 of 23	3 - 4	ND	ND	ND	ND	ND
2-Methylnaphthalene	7 of 23	0.9 - 61	ND	ND	ND	10 J	9 J
Acenaphthene	3 of 23	1 - 3	ND	ND	ND	ND	1 J
Dibenzofuran	3 of 23	2 - 3	ND	ND	ND	ND	ND
Fluorene	3 of 23	3 - 5	ND	ND	ND	ND	ND
N-Nitrosodiphenylamine	1 of 23	4	ND	ND	ND	ND	ND
Phenenthrene	2 of 23	2 - 21	ND	ND	ND	21	ND
Pyrene	1 of 23	6	ND	ND	ND	6 J	ND

TABLE 5-3 (Continued)

NAVAL FUEL DEPOT POINT MOLATE
MARCH 1994 QUARTERLY GROUNDWATER SAMPLING
SUMMARY OF DETECTION FREQUENCY AND CONCENTRATIONS
SVOCs

PRC Sample ID	Detection Frequency	Concentration Range	MW11-13 (26.0)	W11-93 (22.0)	MW11-54 (23.0)	MW11-21 (22.0)	MW11-55 (23.0)
4-Methylphenol	2 of 23	3 - 4	ND	ND	3 J	ND	ND
2-Methylnaphthalene	7 of 23	0.9 - 61	13	61	24	ND	ND
Acenaphthene	3 of 23	1 - 3	3 J	2 J	ND	ND	ND
Dibenzofuran	3 of 23	2 - 3	3 J	2 J	2 J	ND	ND
Fluorene	3 of 23	3 - 5	4 J	5 J	3 J	ND	ND
N-Nitrosodiphenylamine	1 of 23	4	ND	ND	ND	ND	ND
Phenenthrene	2 of 23	2 - 21	ND	ND	2 J	ND	ND
Pyrene	1 of 23	6	ND	ND	ND	ND	ND

TABLE 5-3 (Continued)

NAVAL FUEL DEPOT POINT MOLATE
MARCH 1994 QUARTERLY GROUNDWATER SAMPLING
SUMMARY OF DETECTION FREQUENCY AND CONCENTRATIONS
SVOCs

PRC Sample ID	Detection Frequency	Concentration Range	MW11-19 (23.0)	MW11-56 (22.0)	MW11-57 (23.0)	MW10-04 (21.0)	MW10-05 (19.0)
4-Methylphenol	2 of 23	3 - 4	ND	ND	ND	4 J	ND
2-Methylnaphthalene	7 of 23	0.9 - 61	1 J	ND	ND	ND	ND
Acenaphthene	3 of 23	1 - 3	ND	ND	ND	ND	ND
Dibenzofuran	3 of 23	2 - 3	ND	ND	ND	ND	ND
Fluorene	3 of 23	3 - 5	ND	ND	ND	ND	ND
N-Nitrosodiphenylamine	1 of 23	4	ND	ND	ND	4	ND
Phenenthrene	2 of 23	2 - 21	ND	ND	ND	ND	ND
Pyrene	1 of 23	6	ND	ND	ND	ND	ND

TABLE 5-3 (Continued)

NAVAL FUEL DEPOT POINT MOLATE
MARCH 1994 QUARTERLY GROUNDWATER SAMPLING
SUMMARY OF DETECTION FREQUENCY AND CONCENTRATIONS
SVOCs

PRC Sample ID	Detection Frequency	Concentration Range	ERM10-01 (23.0)	ERM10-02 (19.0)	MW10-08 (24.0)	MW10-09 (19.0)	MW10-10 (21.0)
4-Methylphenol	2 of 23	3 - 4	ND	ND	ND	ND	ND
2-Methylnaphthalene	7 of 23	0.9 - 61	0.9J	ND	ND	ND	ND
Acenaphthene	3 of 23	1 - 3	ND	ND	ND	ND	ND
Dibenzofuran	3 of 23	2 - 3	ND	ND	ND	ND	ND
Fluorene	3 of 23	3 - 5	ND	ND	ND	ND	ND
N-Nitrosodiphenylamine	1 of 23	4	ND	ND	ND	ND	ND
Phenenthrene	2 of 23	2 - 21	ND	ND	ND	ND	ND
Pyrene	1 of 23	6	ND	ND	ND	ND	ND

TABLE 5-3 (Continued)

NAVAL FUEL DEPOT POINT MOLATE
MARCH 1994 QUARTERLY GROUNDWATER SAMPLING
SUMMARY OF DETECTION FREQUENCY AND CONCENTRATIONS
SVOCs

PRC Sample ID	Detection Frequency	Concentration Range	MW10-11 (21.0)	MW10-12 (18.0)	MW10-14 (19.0)
4-Methylphenol	2 of 23	3 - 4	ND	ND	ND
2-Methylnaphthalene	7 of 23	0.9 - 61	ND	ND	ND
Acenaphthene	3 of 23	1 - 3	ND	ND	ND
Dibenzofuran	3 of 23	2 - 3	ND	ND	ND
Fluorene	3 of 23	3 - 5	ND	ND	ND
N-Nitrosodiphenylamine	1 of 23	4	ND	ND	ND
Phenenthrene	2 of 23	2 - 21	ND	ND	ND
Pyrene	1 of 23	6	ND	ND	ND

J The reported concentration was estimated.
B The analyte was also detected in the method blanks.
ND The parameter was not detected at or above the reporting limit.

TABLE 5-4

NAVAL FUEL DEPOT POINT MOLATE
MARCH 1994 QUARTERLY GROUNDWATER SAMPLING
SUMMARY OF TOTAL AND DISSOLVED METALS DETECTION FREQUENCY AND CONCENTRATIONS

Analyte	Detection Frequency (23 samples)		Concentration Ranges (μg/L)		Average Concentration (μg/L)		Background Concentrations: Well MW10-14 (μg/L)	
	Dissolved Metals	Total Metals	Dissolved Metals	Total Metals	Dissolved Metals	Total Metals	Dissolved Metals	Total Metals
Aluminum	2	21	400 - 984	344 - 39,100	692	8,051.4	49 B	6,450 N
Antimony	0	0	0.0	0	0	0	ND	ND
Arsenic	7	9	2.3 - 25.8	2.4 - 10.4	7.1	4.5	ND	ND
Barium	23	23	20.8 - 312	39.9 - 538	89.3	159.5	20.8 B	66.15 B
Beryllium	0	1	0	1.5	0	1.5	ND	ND
Cadmium	0	0	0	0.0	0	0	ND	ND
Calcium	23	23	6,520 - 149,000	6,610 - 156,000	57,989	59,932	7,840	8,460
Chromium	0	13	0	5.1 - 74.8	0	18.9	ND	23.2
Cobalt	3	12	3.5 - 4.4	2 - 35.4	3.9	6.8	ND	ND
Copper	2	8	4.5 - 8.9	3.0 - 47.5	6.7	16	ND	ND
Iron	18	23	14.1 - 9,990	1,520 - 47,200	2,145	10,801	37.3 B	6,650
Lead	8	19	1.3 - 4.7	1.2 - 38.3	2.5	7.9	ND	2.1 BW
Magnesium	23	23	4,810 - 383,000	5,450 - 397,000	59,287	62,332	9,080	10,700
Manganese	23	23	8.8 - 3,800	69.1 - 4,220	1,196	1,481	8.8 B	69.1
Mercury	1	9	0.1	0.1 - 4.8	0.1	1.1	0.11 B	ND
Nickel	13	17	7 - 12	7.2 - 88.7	8.5	23	8.7 B	31.5 B

NAVAL FUEL DEPOT POINT MOLATE
MARCH 1994 QUARTERLY GROUNDWATER SAMPLING
SUMMARY OF TOTAL AND DISSOLVED METALS DETECTION FREQUENCY AND CONCENTRATIONS

Analyte	Detection Frequency (23 samples)		Concentration Ranges (µg/L)		Average Concentration (µg/L)		Background Concentrations: Well MW10-14 (µg/L)	
	Dissolved Metals	Total Metals	Dissolved Metals	Total Metals	Dissolved Metals	Total Metals	Dissolved Metals	Total Metals
Potassium	11	11	2,170 - 122,000	6,650 - 131,000	32,686	35,521	1,210 B	3,170 B
Selenium	14	16	2 - 20	2 - 28.8	9.9	14.4	2.2 B	ND
Silver	0	12	0	2 - 45.8	0	5.7	ND	45.8 N
Sodium	23	23	12,000 - 3,700,000	12,100 - 3,820,000	515,547	523,469	24,900	25,300
Thallium	0	0	0	0	0	0	ND	ND
Vanadium	1	14	2.0	2.0 - 89.1	2	22	ND	11.3 B
Zinc	9	11	1.4 - 40.6	20.3 - 178	11.1	51	3.4 B	16.4 B

B Reported value is greater than the Instrument Detection Limit (IDL), but less than the Contract Required Detection Limit (CRDL)

ND Not dectected

W Post diagnostic spike for furnace Atomic Absorption (AA) analysis is out of control limits

N Spiked sample recovery not within control limits

TABLE 5-5

NAVAL FUEL DEPOT POINT MOLATE
MARCH 1994 QUARTERLY GROUNDWATER SAMPLING
ANALYTICAL RESULTS OF MAJOR ANIONS IN GROUNDWATER SAMPLES

Sample ID	Analyses (Concentrations in mg/L)					
	Chloride	Fluoride	Nitrogen as Nitrite	Nitrogen as Nitrate	Phosphate, Ortho	Sulfate
Area 11						
MW11-08(22.0)	210	0.47	ND	ND	0.29	14,000
MW11-40(17.0)	27	0.42	ND	ND	ND	82
MW11-92(19.0)	160	0.86	ND	ND	0.64	ND
MW11-95(19.0)	160	0.83	ND	ND	0.27	ND
MW11-93(22.0)	200	0.86	ND	ND	0.56	0.9
MW11-54(23.0)	110	1.0	ND	ND	0.35	ND
MW11-96(23.0)	110	1.1	ND	ND	0.35	ND
MW11-21(22.0)	44	0.82	ND	ND	0.27	ND
MW11-55(23.0)	530	1.1	ND	0.64	ND	46
MW11-19(23.0)	430	0.83	ND	0.06	0.31	37
MW11-57(23.0)	1,600	0.98	ND	ND	0.83	110
Area 10						
MW10-05(19.0)	7,400	1.9	ND	0.11	ND	730
ERM10-01(23.0)	100	0.95	ND	ND	ND	1.3
MW10-09(19.0)	40	0.44	ND	ND	ND	31
MW10-98(19.0)	38	0.49	ND	ND	ND	29
MW10-12(18.0)	27	0.85	ND	ND	0.2	21
MW10-14(19.0)	30	0.12	ND	0.62	ND	45

Duplicate samples: MW11-54(23.0) = MW11-96 (23.0)
MW11-92(19.0) = MW11-95(19.0)
MW10-09(19.0) = MW10-98(19.0)

TABLE 5-6

NAVAL FUEL DEPOT POINT MOLATE
MARCH 1994 QUARTERLY GROUNDWATER SAMPLING
ANALYTICAL RESULTS OF pH, TDS, TOC, AND ORGANIC LEAD

Sample ID	pH	TDS (mg/L)	TOC (mg/L)	Organic Lead (mg/L)
MW11-02(26.0)	6.44	715	1.5	ND
MW11-05(22.0)	5.66	423	NA	NA
MW11-08(22.0)	6.74	535	18	ND
MW11-40(17.0)	6.12	127	5.6	ND
MW11-92(19.0)	6.6	735	17	ND
MW11-95(19.0)	6.6	735	17	ND
MW11-13(26.0)	6.56	2,570	NA	NA
MW11-93(22.0)	6.7	871	24	ND
MW11-54(23.0)	6.28	735	11	ND
MW11-96(23.0)	6.28	735	11	ND
MW11-21(22.0)	6.6	553	25	ND
MW11-55(23.0)	7.29	1,437	7.4	ND
MW11-19(23.0)	6.89	1,443	8.0	ND
MW11-56(22.0)	7.1	11,310	NA	NA
MW11-57(23.0)	6.61	2,990	9.4	ND
MW10-02(9.0)	6.25	189		
MW10-04(21.0)	7.68	3,439	NA	NA
MW10-97(21.0)	7.68	3,439	NA	NA
MW10-05(19.0)	7.22	12,090	3.3	ND
ERM10-01(23.0)	6.62	112	6.3	ND
ERM10-02(19.0)	7.05	696	NA	NA
MW10-08(24.0)	6.85	813	NA	NA
MW10-09(19.0)	6.94	573	4.6	ND
MW10-98(19.0)	6.94	573	3.9	ND
MW10-10(21.0)	6.62	521	NA	NA
MW10-11(21.0)	7.03	478	NA	NA
MW10-12(18.0)	6.85	483	4.4	NA
MW10-14(19.0)	6.53	261	3.1	ND

Duplicate samples: MW11-96(23.0) = MW11-54, MW11-95(19.0) = MW11-92
MW10-97(21.0) = MW10-04, MW10-98(19.0) = MW10-09

U - undetected at reported concentration
J - the reported concentration is estimated

R - the reported concentration is unusable
NA - the parameter is not analyzed

TABLE 5-7

NAVAL FUEL DEPOT POINT MOLATE
MARCH 1994 QUARTERLY GROUNDWATER SAMPLING
ANALYTICAL RESULTS OF BIOCHEMICAL ANALYSES

Area No.	Sample ID	Analyses	
		BOD (mg/L)	Heterotrophic Plate Count (CFU/mL)
11	MW11-02 (26.0)	ND	NA
	MW11-08 (22.0)	13	NA
	MW11-40 (17.0)	30	24,000
	MW11-92 (19.0)	15	8,600
	MW11-95 (19.0)	18	11,000
	MW11-93 (22.0)	16	410,000
	MW11-54 (23.0)	16	17,000
	MW11-96 (23.0)	16	12,000
	MW11-21 (22.0)	14	4,200
	MW11-55 (23.0)	ND	52,000
	MW11-19 (23.0)	ND	NA
	MW11-57 (23.0)	11	21,000
10	MW10-05 (19.0)	ND	6,700
	ERM10-01 (23.0)	6.0	5,800
	MW10-09 (19.0)	ND	77,000
	MW10-98 (19.0)	ND	64,000
	MW10-12 (18.0)	ND	NA
	MW10-14 (19.0)	ND	NA

BOD Biochemical oxygen demand
mg/L Milligrams per liter
CFU/mL Colony-forming units per milliliter
ND Nondetect
NA Not analyzed

TABLE 5-8

NAVAL FUEL DEPOT POINT MOLATE
MARCH 1994 QUARTERLY GROUNDWATER SAMPLING
ANALYTICAL RESULTS OF FUEL SAMPLES

Sample ID	Specific Gravity @ 15.56 Celsius	Viscosity @ 23 Celsius	Benzene (µg/g)	Toluene (µg/g)	Ethylbenzene (µg/g)	m-p-o-xylene (µg/g)	Organic Pb (µg/g)	Total Pb (µg/g)
MW11-93	0.8733	5.6 cSt	<400[1]	<150[1]	<500[1]	<100[1]	42	34
MW11-92	0.9242	66 cSt	<100[1]	<50[1]	<60[1]	<100[1]	15	11
MW10-03	0.8225	2.5 cSt	<5[1]	<700[1]	<100[1]	<2,000[1]	<1	<2
MW11-54	0.8641	5.88 cSt	<1,000[1]	<400[1]	<1,000[1]	<500[1]	300	300
ERM02-02	0.8416	2.9 cSt	1,100[1]	600[1]	480[1]	130[1]	<1	<2

µg/g Micrograms per gram
cSt centistokes

[1] Interferences were present that affected the identification and quantitation of the above analytes.

TABLE 5-9

NAVAL FUEL DEPOT POINT MOLATE
MARCH 1994 QUARTERLY REPORT
ANALYTICAL RESULTS OF PRODUCT SAMPLES
POLYNUCLEAR AROMATIC HYDROCARBONS (PAHs)
(Results Reported as μg/g)

Sample ID	MW11-93	MW11-92	MW11-54	MW10-03	ERM02-02	ERM02-02 (Duplicate)	Blank
Analyte							
Naphthalene	<30	<30	<30	<30	430	580	<30
Acenaphthylene	<30	<30	<30	<30	<30	<30	<30
Acenaphthene	97	68	61	<30	88	50	<30
Fluorene	360	170	210	56	92	88	<30
Phenanthrene	300	93	240	48	<30	<30	<30
Anthracene	100	84	80	<30	<30	<30	<30
Flouranthene	<30	<30	<30	<30	<30	<30	<30
Pyrene	65	74	47	<30	<30	<30	<30
Benzo(a)anthracene	38	61	<30	<30	<30	<30	<30
Chrysene	54	94	42	<30	<30	<30	<30
Benzo(b)fluoranthene	<30	<30	<30	<30	<30	<30	<30
Benzo(k)fluoranthene	<30	<30	<30	<30	<30	<30	<30
Benzo(a)pyrene	<30	59	<30	<30	<30	<30	<30
Dibenz(ah)anthracene	<30	<30	<30	<30	<30	<30	<30
Idenopyrene	<30	<30	<30	<30	<30	<30	<30
Benzo(ghi)perylene	<30	<30	<30	<30	<30	<30	<30

μg/g Micrograms per gram

TABLE 5-10

NAVAL FUEL DEPOT POINT MOLATE
LABORATORY AND VALIDATION QUALIFIERS
MARCH 1994 QUARTERLY GROUNDWATER SAMPLING

Laboratory Organic Qualifiers

U This flag indicates that the analyte was not detected at the reported quantity.

B This flag is used when a given target compound was detected in the associated method blank as well as in the sample. It indicates that there was possible/probable blank contamination.

J This flag indicates that the value was qualitatively identified but reported at an estimated quantity.

D This flag indicates all compounds were identified in an analysis at a secondary dilution factor.

P This flag is used for a pesticide/Aroclor target analyte when there is greater than 25 percent difference for detected concentrations between the primary and confirmatory gas chromatograph (GC) columns.

Laboratory Inorganic Qualifiers

U This flag indicates that the analyte was not detected at the reported quantity.

N This flag indicates that the spiked sample recovery was not within control limits.

E The flag is used when the reported value was estimated because of the presence of interference. An explanation must be noted on the cover page or "Form I" if it is applicable to an isolated sample.

B This flag indicates the reported value was less than the Contract Required Detection Limit (CRDL) but greater than the Instrument Detection Limit (IDL).

S This flag indicates the reported value was determined by the MSA.

M This flag indicates the criterion for the precision of the duplicate injection for the sample was not met.

W This flag indicates that the post-digestion spike recovery of the furnace atomic absorption analysis (FAAA) was out of control limits (85 to 115 percent), while the sample absorbance was less than 50 percent of the spiked absorbance.

* This flag is used when the duplicate sample analysis is not within control limits.

+ This flag indicates the correlation coefficient for the MSA was less than 0.995.

NAVAL FUEL DEPOT POINT MOLATE
LABORATORY AND VALIDATION QUALIFIERS
MARCH 1994 QUARTERLY GROUNDWATER SAMPLING

Validation Organic Qualifiers

U	This flag indicates that the compound was analyzed for but not detected. The associated value is either the sample quantitation limit or the sample detection limit
R	This flag is used when the quality controls (QCs) indicate that the data are not usable (compound may or may not be present). Re-analysis is necessary to determine the existence of the compound.
N	This flag indicates presumptive evidence of presence of material.
J-E	This flag indicates the value was estimated due to being out of the calibration range.
J-D	This flag indicates the value was estimated due to the sample being diluted and there were suspected problems associated with the dilution. (Not to be used when a sample is diluted and there are no suspected problems.)
J-H	This flag indicates the value was estimated due to a method holding time violation.
J-I	This flag indicates the value was estimated due to interferences.
J-S	This flag indicates the value was estimated due to surrogate recovery being out of QC limits.
J-M	This flag indicates the value was estimated due to matrix spike (MS) recoveries being out of QC limits.
J-N	This flag indicates the value was estimated due to lack of calibration for the compound; however, there was presumptive evidence of the presence of the compound.
J-K	This flag indicates the value was estimated due to calibration or GC/MS tuning criteria being out of QC limits.
J-L	This flag indicates the value was estimated due to internal standard recoveries being out of QC limits.
J-T	This flag indicates the value was estimated due to only tentative identification of a target compound.
J-V	This flag indicates the value was estimated due to not being able to exactly verify the value when recalculated.

NAVAL FUEL DEPOT POINT MOLATE
LABORATORY AND VALIDATION QUALIFIERS
MARCH 1994 QUARTERLY GROUNDWATER SAMPLING

J-* This flag indicates the value was estimated due to precision of laboratory-matrix spike duplicate sample analyses being out of QC limits.

UJ-H This flag indicates the sample quantitation limit was estimated due to method holding time violation.

U-JB This flag indicates the sample quantitation limit was estimated due to blank contamination. The associated value was less than 5 or 10 times (depending on the compound) the amount found in the blank and was at or above the Contract Required Quantitation Limit (CRQL).

U-B This flag indicates the sample value was initially detected at a value less than the CRQL and the value was less than 5 or 10 times the amount in the blank. The result was an undetected value at the CRQL, which became an estimate sample quantitation limit.

Validation Inorganic Qualifiers

U This flag indicates the analyte was analyzed for but was not detected above the level of the associated value.

R This flag is used when QCs indicate the data were not usable (the analyte may or may not be present). Re-analysis is necessary to determine the existence of the analyte.

J-H This flag indicates the value was estimated due to a method holding time violation.

J-K This flag indicates the value was estimated due to calibration criteria being out of QC limits.

J-I This flag indicates the value was estimated due to problems encountered with the laboratory control sample.

J-* This flag indicates the value was estimated due to precision of laboratory duplicate samples analyses being out of QC limits.

J-N This flag indicates the value was estimated due to matrix spike recoveries being out of QC limits.

J-W This flag indicates the value was estimated due to graphite furnace atomic absorption QC limits being exceeded, such as post digestion spike recoveries being out of QC limits.

J-D This flag indicates the value was estimated due to inductively coupled plasma (ICP) serial dilution criteria being exceeded.

NAVAL FUEL DEPOT POINT MOLATE
LABORATORY AND VALIDATION QUALIFIERS
MARCH 1994 QUARTERLY GROUNDWATER SAMPLING

J-V This flag indicates the value was estimated due to not being able to verify the value when recalculated.

J-+ This flag indicates the value was estimated due to the correlation coefficient for the analyte when the method of standard addition (MSA) was <0.995.

J-B This flag indicates the value was estimated since the value was <CRDL but >IDL.

J-E This flag indicates the value was estimated since the value was <CRDL.

J-M This flag indicates the value was estimated due to duplicate injection precision criteria not being met.

U-B This flag indicates the analyte was undetected due to blank contamination. The value was >IDL but <CRDL and <5 times the level of blank contamination.

UJ-B This flag indicates the analyte was undetected due to blank contamination. However, the value was >CRDL and <5 times the level of blank contamination.

U-Z This flag indicates the analyte was undetected but the value was estimated due to negative blank problems. The blank absolute value was >IDL and the sample value was <IDL.

J-Z This flag indicates the analyte was estimated due to negative blank problems. The blank absolute value was >IDL and the sample value was <5 times the blank absolute value.

TABLE 5-11

NAVAL FUEL DEPOT POINT MOLATE
MARCH 1994 QUARTERLY GROUNDWATER SAMPLING
PERCENT FULFILLMENT OF QC SAMPLING OBJECTIVES

		Percent Fulfillment														
		VOCs			SVOCs			Pesticides/PCBs			TPH-Purgeable			TPH-Extractable		
Field QC Parameter	Frequency of Collection Stated in Field Work Plan	R	A	PF	R	A	PF	R	A	PF	R	A	PF	R	A	PF
Field Duplicate	5%	2	4	200%	2	4	200%	1	1	100%	2	4	200%	2	4	200%
Matrix Spike/Matrix Spike Duplicate	5%	2	2	100%	2	2	100%	1	1	100%	2	2	100%	2	2	100%
Trip Blank	1/cooler[b]	7	7	100%		NA			NA			NA			NA	
Equipment Blank		3	3	100%	3	3	100%		NA		3	3	100%	1	1	100%

TABLE 5-11 (Continued)

NAVAL FUEL DEPOT POINT MOLATE
MARCH 1994 QUARTERLY GROUNDWATER SAMPLING
PERCENT FULFILLMENT OF QC SAMPLING OBJECTIVES

		Percent Fulfillment														
		Organic Lead			Total Metals			Dissolved Metals			TOC			Anions		
Field QC Parameter	Frequency of Collection Stated in Field Work Plan	R	A	PF	R	A	PF	R	A	PF	R	A	PF	R	A	PF
Field Duplicate	5%	1	3	300%	2	4	200%	2	3	150%	1	3	300%	1	3	300%
Matrix Spike/Matrix Spike Duplicate	5%		NA			NA			NA			NA			NA	
Trip Blank	1/cooler[b]		NA			NA			NA			NA			NA	
Equipment Blank			NA			NA[c]			NA[c]			NA			NA	

TABLE 5-11 (Continued)

NAVAL FUEL DEPOT POINT MOLATE
MARCH 1994 QUARTERLY GROUNDWATER SAMPLING
PERCENT FULFILLMENT OF QC SAMPLING OBJECTIVES

Field QC Parameter	Frequency of Collection Stated in Field Work Plan	Percent Fulfillment								
		Nitrate/Nitrite			BOD			Heterotrophic Plate Count		
		R	A	PF	R	A	PF	R	A	PF
Field Duplicate	5%	1	3	300%	1	3	300%	1	3	300%
Matrix Spike/Matrix Spike Duplicate	5%	1	1	100%		NA			NA	
Trip Blank	1/cooler[b]		NA			NA			NA	
Equipment Blank			NA			NA			NA	

[a] QC sampling objective not met
[b] Applies only to coolers containing samples collected for VOC analyses
[c] Disposable sampling equipment used

R Number of QC samples required to be collected
A Number of QC samples actually collected and analyzed
PF Percent fulfillment
NA Not applicable

6.0 RECOMMENDATIONS

Following are recommendations for the confirmation, deletion, or addition of specific analytes and the potential modification of monitoring locations.

6.1 CONFIRMATION OF SPECIFIC COMPOUNDS

Duplicate groundwater samples (analyses) will be provided in the next quarter (June 1994) groundwater sampling event to confirm the following:

Compound	Well Nos.	Analysis
Vinyl chloride	MW11-57, MW10-10	VOC
Chloroethane	MW10-10	VOC
1,1-DCE	MW11-05, MW10-10	VOC
1,2-DCE	MW11-05, MW11-57	VOC
TCE	MW11-05, MW10-10	VOC
Sulfate	MW11-08	Anions
Silver	MW10-14	Metals

6.2 DELETION OF SPECIFIC COMPOUNDS

Organic lead will not be analyzed from any groundwater samples as it has not been detected in any monitoring wells sampled in 1992 or 1994.

It is recommended that pesticides/PCBs be dropped from the monitoring program given the nondetection of these compounds and no expected sources of them.

It is recommended that total metals be dropped from all subsequent quarterly sampling events and that dissolved metals be limited to 10 selected monitoring wells. However, samples from two background monitoring wells (MW10-14 and MW10-15) will be analyzed for total metals in the next quarter (June 1994). The detection of silver at 45.8 μg/L in the total metals analysis at monitoring well MW10-14 will be verified, as this detection was unexpected. No metals analyses were conducted in March 1994 at MW10-15 due to limited well yield.

It is recommended that SVOCs are analyzed at 15 selected locations only, and that only two duplicate SVOC analyses be performed. Current duplicate SVOC data provided excellent comparability of data.

Microbial plate count, BOD, TOC, and anions should be limited to a selected set of 10 monitoring wells, as this data provides only general water quality information. Nitrate/nitrite (NO_3/NO_2) will be analyzed at wells exhibiting detections during March 1994.

6.3 ADEQUACY OF MONITORING LOCATIONS

Monitoring well locations included in the March 1994 sampling program are considered acceptable and representative of groundwater quality for the north shoreline and south shoreline monitoring well network. Specific locations will be maintained due to the detection of chlorinated and volatile compounds, for example, wells MW11-05, MW11-57, MW10-10, MW11-19, MW11-93, MW11-54, and MW11-21. Well MW11-92 should be included in subsequent quarters to confirm the very low and estimated concentrations of BTEX compounds.

Not all Area 10 monitoring wells were intended to be included in the quarterly monitoring program, and first quarter data (March 1994) may now be used to eliminate the following Area 10 and Area 11 monitoring wells based on nondetection of any compounds: MW10-08 and MW10-12. Very low yield at well MW10-02 will require limited analyses (TPH only) at this location. The presence of mostly floating product and low yield at well MW10-03 may prevent collection of any analyses at this location. Extremely low yield in background well MW10-15 will require the collection of only metals analyses at this location. Table 6-1 provides the list of monitoring wells and analyses to be included in the June 1994 (and subsequent) sampling events.

TABLE 6-1

NAVAL FUEL DEPOT POINT MOLATE
JUNE 1994 QUARTERLY GROUNDWATER SAMPLING

Well No.	Analyses										
	TPH-P & BTEX	TPH-E	CLP VOA	CLP SVOAs	Metals Diss.	Metals Total	Anions	NO_3/NO_2	TOC	BOD	Microb. Plate Count
MW11-02	X	X	X	X	X				X	X	X
MW11-05	X	X	X[1]								
MW11-08	X	X	X				X				
MW11-40	X	X	X	X					X	X	X
MW11-92 (PRC #2)	X[1]	X[1]	X	X	X				X	X	X
MW11-13	X	X	X	[1]X							
MW11-93 (PRC #3)	X	X	X	X	X				X	X	X
MW11-21	X	X	X	X					X	X	X
MW11-54	X	X	X	X[1]	X		X		X	X	X
MW11-55	X	X	X	X				X			
MW11-19	X[1,2]	X[1,2]	X[2]	X[2]	X[2]		X	X	X	X	X
MW11-56	X	X	X				X				
MW11-57	X	X	X[1]	X			X		X		
MW10-02	X	X									
MW10-03[3]	X	X									
MW10-04	X	X									
MW10-05	X	X	X	X	X		X	X			
ERM10-01	X	X	X	X			X		X	X	X
ERM10-02	X	X	X		X						
MW10-09	X	X	X	X	X		X			X	X
MW10-10	X	X	X[1]	X							
MW10-11			X								
MW10-14	X[2]	X[2]	X[2]	X[2]	X[2]	X[2]	X	X	X	X	X
MW10-15[3]					X	X					

1 A field duplicate will be taken with this sample.
2 Matrix spike/matrix spike duplicate (MS/MSD) will be collected for these samples.
3 These wells will be sampled only if adequate water is available.

TPH-P Total petroleum hydrocarbons-purgeable
TPH-E Total petroleum hydrocarbons-extractable

7.0 REFERENCES

ERM-West. 1990. Shallow Soil Investigation for Point Molate Naval Fuel Depot. Navy Delivery Order N62474-85-D-5627-0069. September 24.

Greenberg and others. 1992. Standard Methods for the Examination of Water and Wastewater. 18th Ed.

PRC Environmental Management, Inc. (PRC). 1990. Revised Site Inspection Field Work Plan, Point Molate Naval Supply Center Fuel Depot, Richmmond, California. Prepared for Naval Facilities Engineering Command, Western Division, San Bruno, California. July 18.

PRC. 1991a. Point Molate Naval Fuel Depot, Site Inspection, Draft Sumary Report. Prepared for Naval Facilities Engineering Command, Western Division, San Bruno, California. April 5.

PRC. 1991b. Point Molate Naval Fuel Depot, Final Ground Water Monitoring Plan/Site Characterization Study. Prepared for Naval Facilities Engineering Command, Western Division, San Bruno, California. July 10.

PRC. 1991c. Naval Fuel Depot Point Molate, Treatment Ponds Area Characterization and Interim Corrective Actions Field Work Plan. Prepared for Naval Facilities Engineering Command, Western Division, San Bruno, California. October 22.

PRC. 1992a. Point Molate Naval Fuel Depot, Site Inspection, Final Summary Report. Prepared for Naval Facilities Engineering Command, Western Division, San Bruno, California. August 26.

PRC. 1992b. Point Molate Naval Fuel Depot, Treatment Ponds Area, Draft Site Characterization Report. Prepared for Naval Facilities Engineering Command, Western Division, San Bruno, California. October 19.

PRC. 1993a. Navy CLEAN Quality Assurance Project Plan.

PRC. 1993b. Draft Navy CLEAN Basic Order Agreement (BOA) Laboratory Statement of Work. October.

PRC. 1994. Naval Fuel Depot Point Molate, Shoreline/Landfill Investigations and Quarterly Groundwater Sampling, Final Field Work Plan/Sampling Analysis Plan (FWP/SAP). January.

State Water Resources Control Board (SWRCB). 1989. Leaking Underground Fuel Tank Field Manual: Guidelines for Site Assessment, Cleanup, and Underground Storage Tank Closure. State of California. October.

U.S. Environmental Protection Agency (EPA). 1983. Methods for Chemical Analysis of Water and Wastes. Document Number EPA-600/4-79-020. March.

EPA. 1988. Laboratory Data Validation: Functional Guidelines for Evaluating Inorganics Analyses. Prepared by EPA Data Review Work Group. July 1.

EPA. 1990a. USEPA Contract Laboratory Program Statement of Work for Inorganic Analysis. Document Number ILM01.0. March.

EPA. 1990b. USEPA Contract Laboratory Program Statement of Work for Inorganic Analysis. Document Number ILM01.0. May.

EPA. 1991. National Functional Guidelines for Organic Data Review, Multi-Media, Multi-Concentration (OLM01.0) and Low Concentration Water (OLC01.0). EPA Contract Laboratory Program. June.

APPENDIX A

WATER LEVEL AND PRODUCT THICKNESS MEASUREMENTS

TABLE A-1

NAVAL FUEL DEPOT POINT MOLATE
GROUNDWATER LEVEL MEASUREMENTS
MAY 1994

Well ID	Elevation of Monitoring Well (Top of Casing) (Feet)	Depth to Groundwater (Feet)	Elevation of Groundwater Level (Feet)
ERM#1	22.69	16.24	6.45
ERM#2	22.62	15.32	7.3
ERM#3	23.61	17.44	6.17
ERM-EW#2	63.1	5.04	58.06
MW11-02	24.3	18.04	6.26
MW11-04	23.47	15.84	7.63
MW11-05	22.91	16.42	6.49
MW11-06	22.6	16.22	6.38
MW11-07	21.08	15.08	6
MW11-08	20.28	14.43	5.85
MW11-09	17.09	12.91	4.18
MW11-10	17.26	12.21	5.05
MW11-11	17.45	12.7	4.75
MW11-12	17.63	12.21	5.42
MW11-13	17.52	12.58	4.94
MW11-14	18.08	12.1	5.98
MW11-15	17.26	13.7	3.56
MW11-16	16.78	13.23	3.55
MW11-19	20.33	16.46	3.87
MW11-20	19.06	15.15	3.91
MW11-21	20.49	16.6	3.89
MW11-22	21.74	17.5	4.24
MW11-23	22.02	17.67	4.35
MW11-25	21.19	17	4.19

TABLE A-1 (Continued)

NAVAL FUEL DEPOT POINT MOLATE
GROUNDWATER LEVEL MEASUREMENTS
MAY 1994

Well ID	Elevation of Monitoring Well (Top of Casing) (Feet)	Depth to Groundwater (Feet)	Elevation of Groundwater Level (Feet)
MW11-26	16.43	9.95	6.48
MW11-27	16.57	12	4.57
MW11-28	16.57	12.2	4.37
MW11-29	19.12	7.78	11.34
MW11-30	16.41	7.98	8.43
MW11-31	17.05	9.77	7.28
MW11-32	17.12	9.12	8
MW11-33	17.46	4.26	13.2
MW11-36	17.41	10.3	7.11
MW11-37	18.02	10.42	7.6
MW11-38	18.65	10.64	8.01
MW11-40	22.88	9.22	13.66
MW11-41	22.47	8.88	13.59
MW11-43	22.05	7.04	15.01
MW11-44	21.28	7.36	13.92
MW11-45	19.85	7.5	12.35
MW11-46	23.16	10.78	12.38
MW11-47	22.9	7.92	14.98
MW11-49	20.98	2.2	18.78
MW11-51	25.78	8.12	17.66
MW11-52	18.14	13.83	4.31
MW11-53	19.76	14.02	5.74
MW11-54	17.41	13.78	3.63
MW11-55	16.21	12.42	3.79

TABLE A-1 (Continued)

NAVAL FUEL DEPOT POINT MOLATE
GROUNDWATER LEVEL MEASUREMENTS
MAY 1994

Well ID	Elevation of Monitoring Well (Top of Casing) (Feet)	Depth to Groundwater (Feet)	Elevation of Groundwater Level (Feet)
MW11-56	15.06	11.28	3.78
MW11-57	17.74	14.05	3.69
MW11-91	40.18	19.78	20.4
MW11-92	17.69	12.75	4.94
MW11-93	17.66	14.87	2.79
PZ11-01	31.52	13.75	17.77
PZ11-02	23.52	6.12	17.4
PZ11-11A	17.85	13.1	4.75
PZ11-27A	16.92	12.08	4.84
PZ11-27B	16.61	12.48	4.13
PZ11-31A	16.97	13.14	3.83
PZ11-33A	17.63	11.3	6.33
PZ11-34	19.17	5.49	13.68
PZ11-35	19.04	5.7	13.34
PZ11-37A	18.24	11.1	7.14
PZ11-37B	18.16	10.55	7.61
PZ11-38A	18.74	10.68	8.06
MW10-02	22.34	7.36	14.98
MW10-03	21.61	16.96	4.65
MW10-04	21.43	16	5.43
MW10-05	21.79	16.36	5.43
MW10-08	21.65	11.85	9.8
MW10-09	22.38	9.21	13.17
MW10-10	20.56	12.4	8.16

TABLE A-1 (Continued)

NAVAL FUEL DEPOT POINT MOLATE
GROUNDWATER LEVEL MEASUREMENTS
MAY 1994

Well ID	Elevation of Monitoring Well (Top of Casing) (Feet)	Depth to Groundwater (Feet)	Elevation of Groundwater Level (Feet)
MW10-11	19.41	6.21	13.2
MW10-12	16.9	2.93	13.97
MW10-14	19.61	8.79	10.82
MW10-15	42.82	15.4	27.42
MW02-01	137.14	23.34	113.8
MW02-04	49.7	26.66	23.04

Note: Measurements were made on May 2 and 3, 1994.

TABLE A-2

NAVAL FUEL DEPOT POINT MOLATE
PRODUCT THICKNESS MEASUREMENTS
MAY 1994

Well ID	Floating Product Thickness (feet)	Fuel Type
ERM#1	0.04	Diesel/Bunker
ERMEW#2	0.15	Diesel
MW11-11	0.36	Bunker
MW11-12	0.01	Bunker
MW11-13	0.08	Bunker
MW11-25	0.11	Diesel
MW11-27	0.32	Diesel
MW11-28	0.9	Diesel
MW11-30	0.01	Bunker
MW11-31	0.01	Bunker
MW11-32	0.01	Bunker
MW11-33	0.01	Bunker
MW11-36	0.7	Bunker
MW11-40	0.01	Diesel
MW11-54	0.06	Diesel
MW11-92	0.19	Bunker
MW11-93	1.49	Diesel/Bunker
PZ11-11A	0.42	Bunker
PZ11-27B	0.87	Diesel
PZ11-31A	3.27	Diesel
PZ11-33A	0.8	Bunker
PZ11-34	0.01	Sludge
PZ11-37A	0.7	Bunker
MW10-03	0.8	Diesel/JP-5

Note: Measurements were made on May 2 and 3, 1994.

APPENDIX B

GROUNDWATER ANALYTICAL DATA

TABLE B-1
NAVAL FUEL DEPOT, POINT MOLATE
AREA 11: NORTH SHORELINE
ANALYTICAL RESULTS OF TPH IN GROUNDWATER SAMPLES

CONCENTRATION IN UG/L

PRC Sample #	MW11-02(26.0)	MW11-05(22.0)	MW11-08(22.0)	MW11-40(17.0)	MW11-92(19.0)
Lab Sample I.D. (Purgeable/Extractable)	9403109-01B/9403109-01C	9403102-06B/9403102-06C	9403108-01B/9403108-01C	9404010-04B/9404010-04C	9403145-01B/9403145-01C
Purgeable:					
Benzene	0.5 U	0.5 U	0.5 U	2 U	0.5 U
Toluene	0.5 U	0.5 U	0.5 U	2 U	0.5 U
Ethylbenzene	0.5 U	0.5 U	0.5 U	2 U	0.5 U
Total Xylenes	0.5 U	0.5 U	0.5 U	2 U	0.5 U
Gasoline	50 U	50 U	50 U	250 U	50 U
Other Compounds	50 U	50 U	79 Y	2600 Y	190 Y
Extractable:					
JP-4 (C7-C18)	52 U	56 U	52 U	260 U	50 U
JP-5 (C8-C16)	52 U	56 U	52 U	260 U	50 U
Diesel F-76 (C8-C26)	52 U	56 U	52 U	18000	50 U
Weathered Diesel (C8-C26)	52 UJ-K	56 UJ-K	52 UJ-K	260 U	50 U
Bunker Fuel (C10-C26)	520 UJ-K	560 UJ-K	6900 J-K	2600 U	500 U
Other Compounds	52 U	56 U	52 U	260 U	3500 Y
Notes					

PRC Sample #	MW11-95(19.0)	MW11-13(26.0)	MW11-93(22.0)	MW11-54(23.0)	MW11-96(23.0)
Lab Sample I.D. (Purgeable/Extractable)	9403146-01B/9403146-01C	9403138-02B/9403138-02C	9404010-01B/9404010-01C	9403139-01B/9403139-01C	9403139-02B/9403139-02C
Purgeable:					
Benzene	0.5 U	1	11	18	20
Toluene	0.5 U	1 U	3	7	7
Ethylbenzene	0.5 U	1 U	1 U	1 U	1 U
Total Xylenes	0.5 U	1 U	5	21	23
Gasoline	50 U	50 U	50 U	120 U	120 U
Other Compounds	430 Y	500 Y	1500 Y	1700 Y	3200 Y
Extractable:					
JP-4 (C7-C18)	50 U	52 U	51 U	50 U	50 U
JP-5 (C8-C16)	50 U	52 U	51 U	50 U	50 U
Diesel F-76 (C8-C26)	50 U	52 U	51.0 U	1900	1600
Weathered Diesel (C8-C26)	50 U	52 U	51 U	50 U	50 U
Bunker Fuel (C10-C26)	500 U	6800 J-S	510 U	500 U	500 U
Other Compounds	3500 Y	52 U	4100 Y	50 U	50 U
Notes					

Duplicate samples: MW11-54(23.0) and MW11-96(23.0)
MW11-92(19.0) and MW11-95(19.0)

Data Qualifiers:
U - Undetected at the reported concentration.
B - The analyte is found in the associated blank, as well as in samples.
J - The reported concentration is estimated.
NA - The parameter is not analyzed.
X - Manually entered data
Y - Hydrocarbon mixtures not exhibiting a reasonable pattern match with calibration standard or not within 90% of the calibration standard range
Z - The sample did not resemble a typical fuel pattern
J-K - Value is estimated due to calibration or GC/MS tuning criteria being out of QC limits.
J-S - Value is estimated due to surrogate recovery being out of QC limits.

TABLE B-1 (continued)
NAVAL FUEL DEPOT, POINT MOLATE
AREA 11: NORTH SHORELINE
ANALYTICAL RESULTS OF TPH IN GROUNDWATER SAMPLES

CONCENTRATION IN UG/L

PRC Sample #	MW11-21(22)	MW11-55(23.0)	MW11-19(23.0)	MW11-56(22.0)	MW11-57(23.0)
Lab Sample I.D. (Purgeable/Extractable)	9403145-02B/9403145-02C	9403109-02B/9403109-02C	9403108-03B/9403108-03C	9404010-02B/9404010-02C	9403138-05B/9403138-05C
Purgeable:					
Benzene	0.5 U	0.5 U	73	0.5 U	0.5 U
Toluene	8	0.5 U	14	0.5 U	0.5 U
Ethylbenzene	0.6	0.5 U	13	0.5 U	0.5 U
Total Xylenes	17	0.5 U	42	0.5 U	0.5 U
Gasoline	50 U	50 U	250 U	50 U	50 U
Other Compounds	1400 Y	270 Y	7700 Y	160 Y	910 Y
Extractable:					
JP-4 (C7-C18)	50 U	52 U	270	52 U	50 U
JP-5 (C8-C16)	50 U	52 U	52 U	52 U	50 U
Diesel F-76 (C8-C28)	50 U	52 U	52 U	52 U	50 U
Weathered Diesel (C8-C26)	50 U	52 UJ-K	52 UJ-K	52 U	50 U
Bunker Fuel (C10-C28)	7400	1100 J-K	2400 J-K	520 U	5500
Other Compounds	50 U	52 U	52 U	52 U	50 U
Notes					
PRC Sample #					
Lab Sample I.D. (Purgeable/Extractable)					
Purgeable:					
Benzene					
Toluene					
Ethylbenzene					
Total Xylenes					
Gasoline					
Other Compounds					
Extractable:					
JP-4 (C7-C18)					
JP-5 (C8-C16)					
Diesel F-76 (C8-C28)					
Weathered Diesel (C8-C26)					
Bunker Fuel (C10-C28)					
Other Compounds					
Notes					

Data Qualifiers:
U - Undetected at the reported concentration.
B - The analyte is found in the associated blank, as well as in samples.
J - The reported concentration is estimated.
NA - The parameter is not analyzed.
X - Manually entered data
Y - Hydrocarbon mixtures not exhibiting a reasonable pattern match with calibration standard or not within 90% of the calibration standard range
Z - The sample did not resemble a typical fuel pattern
J-K - Value is estimated due to calibration or GC/MS tuning criteria being out of QC limits.

TABLE B-2
NAVY FUEL DEPOT, POINT MOLATE
AREA 10: SOUTH SHORELINE
ANALYTICAL RESULTS OF TPH IN GROUNDWATER SAMPLES

CONCENTRATION IN UG/L

PRC Sample #	MW10-02(9.0)	MW10-04(21.0)	MW10-97(21.0)	MW10-05(19.0)	ERM10-01(23.0)
Lab Sample I.D. (Purgeable/Extractable)	9403139-03A/9403139-03B	9403127-01B/9403127-01C	9403128-01B/9403128-01C	9403128-02C/9403128-02B	9403138-04B/9403138-04C
Purgeable:					
Benzene	0.5 U	0.5 U	0.5 U	0.5 U	0.5 U
Toluene	0.5 U	0.5 U	0.5 U	0.5 U	0.5 U
Ethylbenzene	0.5 U	0.5 U	0.5 U	0.5 U	0.5 U
Total Xylenes	0.5 U	0.5 U	0.5 U	0.5 U	0.5 U
Gasoline	50 U	50 U	50 U	50 U	50 U
Other Compounds	310 Y	50 U	50 U	370 Z	1000 Y
Extractable:					
JP-4 (C7-C18)	50.0 U	52 UJ-H	50 UJ-H	50 UJ-H	52 U
JP-5 (C8-C16)	50.0 U	52 UJ-H	50 UJ-H	50 UJ-H	52 U
Diesel F-76 (C8-C28)	50.0 U	52 UJ-H	50 UJ-H	50 UJ-H	52 U
Weathered Diesel (C8-C26)	50.0 U	52 UJ-H	50 UJ-H	50 UJ-H	1300
Bunker Fuel (C10-C28)	500 U	520 UJ-H	500 UJ-H	500 UJ-H	520 U
Other Compounds	50 U	2800 J-H Y	2300 J-H Y	50 UJ-H	52 U
Notes					

PRC Sample #	ERM10-02(19.0)	MW10-08(24.0)	MW10-09(19.0)	MW10-98(19.0)	MW10-10(21.0)
Lab Sample I.D. (Purgeable/Extractable)	9403138-03B/9403138-03C	9403127-02B/9403127-02C	9403127-04B/9403127-04C	9403128-03B/9403128-03B	9403113-01B/9403113-01C
Purgeable:					
Benzene	0.5 U	0.5 U	0.5 U	0.5 U	0.5 U
Toluene	0.5 U	0.5 U	0.5 U	0.5 U	0.5 U
Ethylbenzene	0.5 U	0.5 U	0.5 U	0.5 U	0.5 U
Total Xylenes	0.5 U	0.5 U	0.5 U	0.5 U	0.5 U
Gasoline	50 U	50 U	50 U	50 U	50 U
Other Compounds	50 U	81 Y	50 U	50 U	50 U
Extractable:					
JP-4 (C7-C18)	51 U	52 UJ-H	51 UJ-H	50 UJ-H	51 UJ-H
JP-5 (C8-C16)	51 U	52 UJ-H	51 UJ-H	50 UJ-H	51 UJ-H
Diesel F-76 (C8-C28)	51 U	52 UJ-H	51 UJ-H	50 UJ-H	51 UJ-H
Weathered Diesel (C8-C26)	51 U	52 UJ-H	51 UJ-H	50 UJ-H	51 UJ-H
Bunker Fuel (C10-C28)	510 U	520 UJ-H	510 UJ-H	500 UJ-H	510 UJ-H
Other Compounds	51 U	250 J-H Z	51 UJ-H	180 J-H Z	51 UJ-H
Notes					

Data Qualifiers:
U - Undetected at the reported concentration.
B - The analyte is found in the associated blank, as well as in samples.
J - The reported concentration is estimated.
NA - The parameter is not analyzed.
X - Manually entered data
Y - Hydrocarbon mixtures not exhibiting a reasonable pattern match with calibration standard or not within 90% of the calibration standard range
Z - The sample did not resemble a typical fuel pattern
J-H - Value is estimated due to a method holding time violation.

Duplicate samples: MW10-04(21.0) and MW10-97(21.0)
MW10-09(19.0) and MW10-98(19.0)

TABLE B-2 (continued)
NAVY FUEL DEPOT, POINT MOLATE
AREA 10: SOUTH SHORELINE
ANALYTICAL RESULTS OF TPH IN GROUNDWATER SAMPLES

CONCENTRATION IN UG/L

PRC Sample #	MW10-11(21.0)	MW10-12(18.0)	MW10-14(19.0)		
Lab Sample I.D. (Purgeable/Extractable)	9403139-04B/9403139-04C	9403102-02B/9403102-02C	9403102-01B/9403102-01C		
Purgeable:					
Benzene	0.5 U	0.5 U	0.5 U		
Toluene	0.5 U	0.5 U	0.5 U		
Ethylbenzene	0.5 U	0.5 U	0.5 U		
Total Xylenes	0.5 U	0.5 U	0.5 U		
Gasoline	50 U	50 U	50 U		
Other Compounds	50 U	50 U	50 U		
Extractable:					
JP-4 (C7-C16)	50 U	50 U	52 U		
JP-5 (C8-C16)	50 U	50 U	52 U		
Diesel F-76 (C8-C26)	50 U	50 U	52 U		
Weathered Diesel (C8-C26)	50 U	50 UJ-K	52 UJ-K		
Bunker Fuel (C10-C26)	500 U	500 UJ-K	520 UJ-K		
Other Compounds	50 U	50 U	52 U		
Notes					

PRC Sample #					
Lab Sample I.D. (Purgeable/Extractable)					
Purgeable:					
Benzene					
Toluene					
Ethylbenzene					
Total Xylenes					
Gasoline					
Other Compounds					
Extractable:					
JP-4 (C7-C16)					
JP-5 (C8-C16)					
Diesel F-76 (C8-C26)					
Weathered Diesel (C8-C26)					
Bunker Fuel (C10-C26)					
Other Compounds					
Notes					

Data Qualifiers:
U - Undetected at the reported concentration.
B - The analyte is found in the associated blank, as well as in samples.
J - The reported concentration is estimated.
NA - The parameter is not analyzed.
X - Manually entered data
Y - Hydrocarbon mixtures not exhibiting a reasonable pattern match with calibration standard or not within 90% of the calibration standard range
Z - The sample did not resemble a typical fuel pattern
J-K - Value is estimated due to calibration or GC/MS tuning criteria being out of QC limits.

TABLE B-3
NAVAL FUEL DEPOT POINT MOLATE
AREA 11: NORTH SHORELINE
ANALYTICAL RESULTS OF VOCS IN GROUNDWATER SAMPLES

Project : POINT MOLATE
Lab. : ETCMP
FILTER : area ='AREA 11' AND TIC = 'N'
Date : 06/20/94 12:17:51

PRC Sample ID	MW11-02(26.0)			MW11-05(22.0)			MW11-08(22.0)			MW11-40(17)			MW11-92(19)		
Lab Samp Id	9403109-01A			9403102-06A			9403108-01A			9404010-04A			9403145-01A		
Matrix	WATER			WATER			WATER			WATER			WATER		
Units	UG/L			UG/L			UG/L			UG/L			UG/L		
Date Received	03/23/94			03/22/94			03/23/94			04/01/94			03/30/94		
Date Analyzed	03/30/94			03/28/94			03/28/94			04/07/94			04/06/94		
Compound	Result	Val	Com	Result	Val	Com	Result	Val	Com	Result	Val	Com	Result	Val	Com
CHLOROMETHANE	2	U		2	U		2	U		2	U		2	U	
BROMOMETHANE	2	U		2	U		2	U		2	U		2	U	
VINYL CHLORIDE	2	U		2	U		2	U		2	U		2	U	
CHLOROETHANE	2	U		2	U		2	U		2	U		2	U	
METHYLENE CHLORIDE	2	U-B		2	U		2	U		2	U		2	U	
ACETONE	2	U		2	U		2	U		2	UJ-K		2	U	
CARBON DISULFIDE	2	U		2	U		2	U		2	U		2	U	
1,1-DICHLOROETHENE	2	U		0.2	J		2	U		2	U		2	U	
1,1-DICHLOROETHANE	2	U		2	U		2	U		2	U		2	U	
1,2-DICHLOROETHENE (TOTAL)	2	U		4			2	U		2	U		2	U	
CHLOROFORM	2	U		2	U		2	U		6			2	U	
1,2-DICHLOROETHANE	2	U		2	U		2	U		2	U		2	U	
2-BUTANONE	2	U		2	U		2	U		2	U		3		
1,1,1-TRICHLOROETHANE	2	U		2	U		2	U		2	U		2	U	
CARBON TETRACHLORIDE	2	U		2	U		2	U		2	U		2	U	
BROMODICHLOROMETHANE	2	U		2	U		2	U		2	U		2	U	
1,2-DICHLOROPROPANE	2	U		2	U		2	U		2	U		2	U	
CIS-1,3-DICHLOROPROPENE	2	U		2	U		2	U		2	U		2	U	
TRICHLOROETHENE	2	U		2			2	U		2	U		2	U	
DIBROMOCHLOROMETHANE	2	U		2	U		2	U		2	U		2	U	
1,1,2-TRICHLOROETHANE	2	U		2	U		2	U		2	U		2	U	
BENZENE	2	U		2	U		2	U		0.1	J		0.09	J	
TRANS-1,3-DICHLOROPROPENE	2	U		2	U		2	U		2	U		2	U	
BROMOFORM	2	R		2	R		2	R		2	U		2	U	
4-METHYL-2-PENTANONE	2	U		2	U		2	U		2	U		2	U	
2-HEXANONE	2	U		2	U		2	U		2	U		2	U	
TETRACHLOROETHENE	2	U		2	U		2	U		2	U		2	U	
1,1,2,2-TETRACHLOROETHANE	2	R		2	R		2	R		2	U		2	U	
TOLUENE	2	U		2	U		2	U		2	U		2	U	
CHLOROBENZENE	2	U		2	U		2	U		2	U		2	U	
ETHYLBENZENE	2	U		2	U		2	U		2	U		2	U	
STYRENE	2	U		2	U		2	U		2	U		2	U	
XYLENE (TOTAL)	2	U		2	U		2	U		2	U		10	U-B	

TABLE B-3
NAVAL FUEL DEPOT POINT MOLATE
AREA 11: NORTH SHORELINE
ANALYTICAL RESULTS OF VOCS IN GROUNDWATER SAMPLES

Project : POINT MOLATE
Lab. : ETCMP
FILTER : area ='AREA 11' AND TIC = 'N'
Date : 06/20/94 12:17:51

PRC Sample ID	MW11-95(19)			MW11-13(26)			MW11-93(22)			MW11-54(23)			MW11-96(23)		
Lab Samp Id	9403146-01A			9403138-02A			9404010-01A			9403139-01A			9403139-02A		
Matrix	WATER			WATER			WATER			WATER			WATER		
Units	UG/L			UG/L			UG/L			UG/L			UG/L		
Date Received	03/30/94			03/29/94			04/01/94			03/29/94			03/29/94		
Date Analyzed	04/07/94			04/04/94			04/08/94			04/06/94			04/06/94		
Compound	Result	Val	Com	Result	Val	Com	Result	Val	Com	Result	Val	Com	Result	Val	Com
CHLOROMETHANE	2	U		7	U		2	U		2	U		3	U	
BROMOMETHANE	2	U		7	U		2	U		2	U		3	U	
VINYL CHLORIDE	2	U		7	U		2	U		2	U		3	U	
CHLOROETHANE	2	U		7	U		2	U		2	U		3	U	
METHYLENE CHLORIDE	2	U-B		1	J		2	U		2	U		3	U	
ACETONE	2	UJ-K		7	U		2	UJ-K		32	J-K		30	J-K	
CARBON DISULFIDE	2	U		7	U		2	U		2	U		0.2	J	
1,1-DICHLOROETHENE	2	U		7	U		2	U		2	U		3	U	
1,1-DICHLOROETHANE	2	U		7	U		2	U		2	U		3	U	
1,2-DICHLOROETHENE (TOTAL)	2	U		7	U		2	U		2	U		3	U	
CHLOROFORM	2	U		7	U		2	U		2	U		3	U	
1,2-DICHLOROETHANE	2	U		7	U		2	U		2	U		3	U	
2-BUTANONE	4			7	U		23			26			23		
1,1,1-TRICHLOROETHANE	2	U		7	U		2	U		2	U		3	U	
CARBON TETRACHLORIDE	2	U		7	U		2	U		2	U		3	U	
BROMODICHLOROMETHANE	2	U		7	U		2	U		2	U		3	U	
1,2-DICHLOROPROPANE	2	U		7	U		2	U		2	U		3	U	
CIS-1,3-DICHLOROPROPENE	2	U		7	U		2	U		2	U		3	U	
TRICHLOROETHENE	2	U		7	U		2	U		2	U		3	U	
DIBROMOCHLOROMETHANE	2	U		7	U		2	U		2	U		3	U	
1,1,2-TRICHLOROETHANE	2	U		7	U		2	U		2	U		3	U	
BENZENE	0.09	J		2	J		2	J		4			4		
TRANS-1,3-DICHLOROPROPENE	2	U		7	U		2	U		2	U		3	U	
BROMOFORM	2	U		7	U		2	U		2	R		3	R	
4-METHYL-2-PENTANONE	2	U		7	U		2	U		2	U		3	U	
2-HEXANONE	2	U		7	U		2	U		2	U		3	U	
TETRACHLOROETHENE	2	U		7	U		2	U		2	U		3	U	
1,1,2,2-TETRACHLOROETHANE	2	U		7	U		2	U		2	R		3	R	
TOLUENE	2	U		7	U		1	J		8			7		
CHLOROBENZENE	2	U		93			2	U		2	U		3	U	
ETHYLBENZENE	2	U		7	U		0.6	J		2	J		2	J	
STYRENE	2	U		7	U		2	U		2	U		3	U	
XYLENE (TOTAL)	0.2	J		7	U		9			34	B		31	B	

TABLE B-3
NAVAL FUEL DEPOT POINT MOLATE
AREA 11: NORTH SHORELINE
ANALYTICAL RESULTS OF VOCS IN GROUNDWATER SAMPLES

Project : POINT MOLATE
Lab. : ETCMP
FILTER : area ='AREA 11' AND TIC = 'N'
Date : 06/20/94 12:17:51

PRC Sample ID	MW11-21(22)			MW11-55(23.0)			MW11-19(23.0)			MW11-56(22)			MW11-57(23)		
Lab Samp Id	9403145-02A			9403109-02A			9403108-03A			9404010-02A			9403138-05A		
Matrix	WATER			WATER			WATER			WATER			WATER		
Units	UG/L			UG/L			UG/L			UG/L			UG/L		
Date Received	03/30/94			03/23/94			03/23/94			04/01/94			03/29/94		
Date Analyzed	04/06/94			03/28/94			03/31/94			04/07/94			04/04/94		
Compound	Result	Val	Com	Result	Val	Com	Result	Val	Com	Result	Val	Com	Result	Val	Com
CHLOROMETHANE	2	U		2	U		3	UJ-K		2	U		2	U	
BROMOMETHANE	2	U		2	U		3	U		2	U		2	U	
VINYL CHLORIDE	2	U		2	U		3	U		2	U		11		
CHLOROETHANE	2	U		2	U		3	U		2	U		2	U	
METHYLENE CHLORIDE	2	U		2	U		3	U		2	U		2	U	
ACETONE	4			2	U		3	U		2	UJ-K		13		
CARBON DISULFIDE	2	U		0.05	J		3	U		2	U		2	U	
1,1-DICHLOROETHENE	2	U		2	U		3	U		2	U		2	U	
1,1-DICHLOROETHANE	2	U		2	U		3	U		2	U		2	U	
1,2-DICHLOROETHENE (TOTAL)	2	U		0.2	J		0.5	J		2	U		8		
CHLOROFORM	2	U		2	U		3	U		2	U		2	U	
1,2-DICHLOROETHANE	2	U		2	U		3	U		2	U		2	U	
2-BUTANONE	2	U		2	U		3	U		2	U		2	U	
1,1,1-TRICHLOROETHANE	2	U		2	U		3	U		2	U		2	U	
CARBON TETRACHLORIDE	2	U		2	U		3	U		2	U		2	U	
BROMODICHLOROMETHANE	2	U		2	U		3	U		2	U		2	U	
1,2-DICHLOROPROPANE	2	U		2	U		3	U		2	U		2	U	
CIS-1,3-DICHLOROPROPENE	2	U		2	U		3	U		2	U		2	U	
TRICHLOROETHENE	2	U		2	U		3	U		2	U		2	U	
DIBROMOCHLOROMETHANE	2	U		2	U		3	U		2	U		2	U	
1,1,2-TRICHLOROETHANE	2	U		2	U		3	U		2	U		2	U	
BENZENE	2	J		2	U-B		53			2	U		0.7	J	
TRANS-1,3-DICHLOROPROPENE	2	U		2	U		3	U		2	U		2	U	
BROMOFORM	2	U		2	R		3	R		2	U		2	U	
4-METHYL-2-PENTANONE	2	U		2	U		3	U		2	U		2	U	
2-HEXANONE	2	U		2	U		3	U		2	U		2	U	
TETRACHLOROETHENE	2	U		2	U		3	U		2	U		2	U	
1,1,2,2-TETRACHLOROETHANE	2	U		2	R		3	R		2	U		2	U	
TOLUENE	6			2	U		8			2	U		2	U	
CHLOROBENZENE	2	U		2	U		3	U		2	U		2	U	
ETHYLBENZENE	2	J		2	U		10			2	U		2	U	
STYRENE	2	U		2	U		3	U		2	U		2	U	
XYLENE (TOTAL)	22	B		2	U-B		31			2	U		10	U-B	

TABLE B-4
NAVAL FUEL DEPOT POINT MOLATE
AREA 10: SOUTH SHORELINE
ANALYTICAL RESULTS OF VOCS IN GROUNDWATER SAMPLES

Project : POINT MOLATE
Lab. : ETCMP
FILTER : area ='AREA 10' AND TIC = 'N'
Date : 06/20/94 12:19:05

PRC Sample ID	MW10-04 (21.0)			MW10-97(21.0)			MW10-05(19.0)			ERM10-01(23)			ERM10-02(19)		
Lab Samp Id	9403127-01A			9403128-01A			9403128-02A			9403138-04A			9403138-03A		
Matrix	WATER			WATER			WATER			WATER			WATER		
Units	UG/L			UG/L			UG/L			UG/L			UG/L		
Date Received	03/28/94			03/28/94			03/28/94			03/29/94			03/29/94		
Date Analyzed	03/31/94			03/30/94			03/31/94			04/04/94			04/04/94		
Compound	Result	Val	Com	Result	Val	Com	Result	Val	Com	Result	Val	Com	Result	Val	Com
CHLOROMETHANE	2	UJ-R		2	U		2	UJ-K		3	U		2	U	
BROMOMETHANE	2	U		2	U		2	U		3	U		2	U	
VINYL CHLORIDE	2	U		2	U		2	U		3	U		2	U	
CHLOROETHANE	2	U		2	U		2	U		3	U		2	U	
METHYLENE CHLORIDE	2	U		2	U-B		2	U		0.4	J		2	U	
ACETONE	4	UJ-B		4	UJ-B		2	U		3	U		2	U	
CARBON DISULFIDE	0.5	J		0.5	J		2	U		3	U		2	U	
1,1-DICHLOROETHENE	2	U		2	U		2	U		3	U		2	U	
1,1-DICHLOROETHANE	2	U		2	U		2	U		3	U		2	U	
1,2-DICHLOROETHENE (TOTAL)	2	U		2	U		2	U		3	U		2	U	
CHLOROFORM	2	U		2	U		2	U		3	U		2	U	
1,2-DICHLOROETHANE	2	U		2	U		2	U		3	U		2	U	
2-BUTANONE	11	UJ-B		9	UJ-B		2	U		39			2	U	
1,1,1-TRICHLOROETHANE	2	U		2	U		2	U		3	U		2	U	
CARBON TETRACHLORIDE	2	U		2	U		2	U		3	U		2	U	
BROMODICHLOROMETHANE	2	U		2	U		2	U		3	U		2	U	
1,2-DICHLOROPROPANE	2	U		2	U		2	U		3	U		2	U	
CIS-1,3-DICHLOROPROPENE	2	U		2	U		2	U		3	U		2	U	
TRICHLOROETHENE	2	U		2	U		2	U		3	U		2	U	
DIBROMOCHLOROMETHANE	2	U		2	U		2	U		3	U		2	U	
1,1,2-TRICHLOROETHANE	2	U		2	U		2	U		3	U		2	U	
BENZENE	2	U		2	U		0.1	J		3	U		2	U	
TRANS-1,3-DICHLOROPROPENE	2	U		2	U		2	U		3	U		2	U	
BROMOFORM	2	R		2	R		2	R		3	U		2	U	
4-METHYL-2-PENTANONE	2	U		2	U		2	U		3	U		2	U	
2-HEXANONE	2	U		2	U		2	U		3	U		2	U	
TETRACHLOROETHENE	2	U		2	U		2	U		3	U		2	U	
1,1,2,2-TETRACHLOROETHANE	2	R		2	R		2	R		3	U		2	U	
TOLUENE	2	U		2	U		2	U		3	U		2	U	
CHLOROBENZENE	2	U		2	U		2	U		3	U		2	U	
ETHYLBENZENE	2	U		2	U		2	U		3	U		2	U	
STYRENE	2	U		2	U		2	U		3	U		2	U	
XYLENE (TOTAL)	2	U		2	U		2	U		3	U		2	U	

TABLE B-4
NAVAL FUEL DEPOT POINT MOLATE
AREA 10: SOUTH SHORELINE
ANALYTICAL RESULTS OF VOCS IN GROUNDWATER SAMPLES

Project : POINT MOLATE
Lab. : ETCMP
FILTER : area ='AREA 10' AND TIC = 'N'
Date : 06/20/94 12:19:05

PRC Sample ID	MW10-08 (24.0)			MW10-09 (19.0)			MW10-98(19.0)			MW10-10(21.0)			MW10-11(21)		
Lab Samp Id	9403127-02A			9403127-04A			9403128-03A			9403113-01A			9403139-04A		
Matrix	WATER			WATER			WATER			WATER			WATER		
Units	UG/L			UG/L			UG/L			UG/L			UG/L		
Date Received	03/28/94			03/28/94			03/28/94			03/24/94			03/29/94		
Date Analyzed	03/31/94			03/30/94			03/30/94			03/30/94			04/06/94		
Compound	Result	Val	Com	Result	Val	Com	Result	Val	Com	Result	Val	Com	Result	Val	Com
CHLOROMETHANE	2	UJ-K		2	U		2	U		2	U		2	U	
BROMOMETHANE	2	U		2	U		2	U		2	U		2	U	
VINYL CHLORIDE	2	U		2	U		2	U		2			2	U	
CHLOROETHANE	2	U		2	U		2	U		7			2	U	
METHYLENE CHLORIDE	2	U		2	U		2	U		2	U-B		2	U	
ACETONE	2	U		2	U		2	U		2	U		2	U	
CARBON DISULFIDE	2	U		2	U		2	U		2	U		0.05	J	
1,1-DICHLOROETHENE	2	U		2	U		2	U		3			2	U	
1,1-DICHLOROETHANE	2	U		2	U		2	U		38			2	U	
1,2-DICHLOROETHENE (TOTAL)	2	U		2	U		2	U		2	U		2	U	
CHLOROFORM	2	U		2	U		2	U		2	U		2	U	
1,2-DICHLOROETHANE	2	U		2	U		2	U		2	U		2	U	
2-BUTANONE	2	U		2	U		2	U		2	U		2	U	
1,1,1-TRICHLOROETHANE	2	U		2	U		2	U		7			2	U	
CARBON TETRACHLORIDE	2	U		2	U		2	U		2	U		2	U	
BROMODICHLOROMETHANE	2	U		2	U		2	U		2	U		2	U	
1,2-DICHLOROPROPANE	2	U		2	U		2	U		2	U		2	U	
CIS-1,3-DICHLOROPROPENE	2	U		2	U		2	U		2	U		2	U	
TRICHLOROETHENE	2	U		2	U		2	U		2	U		2	U	
DIBROMOCHLOROMETHANE	2	U		2	U		2	U		2	U		2	U	
1,1,2-TRICHLOROETHANE	2	U		2	U		2	U		2	U		2	U	
BENZENE	2	U		2	U		2	U		2	U-B		2	U	
TRANS-1,3-DICHLOROPROPENE	2	U		2	U		2	U		2	U		2	U	
BROMOFORM	2	R		2	R		2	R		2	R		2	R	
4-METHYL-2-PENTANONE	2	U		2	U		2	U		2	U		2	U	
2-HEXANONE	2	U		2	U		2	U		2	U		2	U	
TETRACHLOROETHENE	2	U		2	U		2	U		2	U		2	U	
1,1,2,2-TETRACHLOROETHANE	2	R		2	R		2	R		2	R		2	R	
TOLUENE	2	U		2	U		2	U		2	U		2	U	
CHLOROBENZENE	2	U		2	U		2	U		2	U		2	U	
ETHYLBENZENE	2	U		2	U		2	U		2	U		2	U	
STYRENE	2	U		2	U		2	U		2	U		2	U	
XYLENE (TOTAL)	2	U		2	U		2	U		2	U		2	U-B	

TABLE B-4
NAVAL FUEL DEPOT POINT MOLATE
AREA 10: SOUTH SHORELINE
ANALYTICAL RESULTS OF VOCS IN GROUNDWATER SAMPLES

Project : POINT MOLATE
Lab. : ETCMP
FILTER : area ='AREA 10' AND TIC = 'N'
Date : 06/20/94 12:19:05

PRC Sample ID	MW10-12(18.0)			MW10-14(19.0)											
Lab Samp Id	9403102-02A			9403102-01A											
Matrix	WATER			WATER											
Units	UG/L			UG/L											
Date Received	03/22/94			03/22/94											
Date Analyzed	03/28/94			03/28/94											
Compound	Result	Val	Com	Result	Val	Com	Result	Val	Com	Result	Val	Com	Result	Val	Com
CHLOROMETHANE	2	U		2	U										
BROMOMETHANE	2	U		2	U										
VINYL CHLORIDE	2	U		2	U										
CHLOROETHANE	2	U		2	U										
METHYLENE CHLORIDE	2	U-B		2	U-B										
ACETONE	2	U		2	U										
CARBON DISULFIDE	2	U		2	U										
1,1-DICHLOROETHENE	2	U		2	U										
1,1-DICHLOROETHANE	2	U		2	U										
1,2-DICHLOROETHENE (TOTAL)	2	U		2	U										
CHLOROFORM	2	U		2	U										
1,2-DICHLOROETHANE	2	U		2	U										
2-BUTANONE	2	U		2	U										
1,1,1-TRICHLOROETHANE	2	U		2	U										
CARBON TETRACHLORIDE	2	U		2	U										
BROMODICHLOROMETHANE	2	U		2	U										
1,2-DICHLOROPROPANE	2	U		2	U										
CIS-1,3-DICHLOROPROPENE	2	U		2	U										
TRICHLOROETHENE	2	U		2	U										
DIBROMOCHLOROMETHANE	2	U		2	U										
1,1,2-TRICHLOROETHANE	2	U		2	U										
BENZENE	2	U		2	U										
TRANS-1,3-DICHLOROPROPENE	2	U		2	U										
BROMOFORM	2	R		2	R										
4-METHYL-2-PENTANONE	2	U		2	U										
2-HEXANONE	2	U		2	U										
TETRACHLOROETHENE	2	U		2	U										
1,1,2,2-TETRACHLOROETHANE	2	R		2	R										
TOLUENE	2	U		2	U										
CHLOROBENZENE	2	U		2	U										
ETHYLBENZENE	2	U		2	U										
STYRENE	2	U		2	U										
XYLENE (TOTAL)	2	U		2	U										

TABLE B-5
NAVAL FUEL DEPOT POINT MOLATE
AREA 11: NORTH SHORELINE
ANALYTICAL RESULTS OF SVOCS IN GROUNDWATER SAMPLES

Project : POINT MOLATE
Lab. : ETCMP
FILTER : area ='AREA 11' AND SMPTYPE='ORIG' AND TIC='N'
Date : 06/20/94 18:18:19

PRC Sample ID	MW11-02(26.0)			MW11-05(22.0)				MW11-02(26.0)			MW11-05(22.0)		
Lab Samp Id	9403109-01C			9403102-06C				9403109-01C			9403102-06C		
Matrix	WATER			WATER				WATER			WATER		
Units	UG/L			UG/L				UG/L			UG/L		
Date Received	03/23/94			03/22/94				03/23/94			03/22/94		
Date Extracted	03/24/94			03/24/94				03/24/94			03/24/94		
Date Analyzed	04/14/94			04/13/94				04/14/94			04/13/94		
Compound	Result	Val	Com	Result	Val	Com	Compound	Result	Val	Com	Result	Val	Com
PHENOL	11	U		10	U		2,4-DINITROPHENOL	26	U		25	U	
BIS(2-CHLOROETHYL)ETHER	11	U		10	U		4-NITROPHENOL	26	U		25	U	
2-CHLOROPHENOL	11	U		10	U		DIBENZOFURAN	11	U		10	U	
1,3-DICHLOROBENZENE	11	U		10	U		2,4-DINITROTOLUENE	11	U		10	U	
1,4-DICHLOROBENZENE	11	U		10	U		DIETHYLPHTHALATE	11	U		10	U	
1,2-DICHLOROBENZENE	11	U		10	U		4-CHLOROPHENYL-PHENYLETHER	11	U		10	U	
2-METHYLPHENOL	11	U		10	U		FLUORENE	11	U		10	U	
2,2'-OXYBIS(1-CHLOROPROPANE)	11	U		10	U		4-NITROANILINE	26	U		25	U	
4-METHYLPHENOL	11	U		10	U		4,6-DINITRO-2-METHYLPHENOL	26	U		25	U	
N-NITROSO-DI-N-PROPYLAMINE	11	U		10	U		N-NITROSODIPHENYLAMINE (1)	11	U		10	U	
HEXACHLOROETHANE	11	U		10	U		4-BROMOPHENYL-PHENYLETHER	11	U		10	U	
NITROBENZENE	11	U		10	U		HEXACHLOROBENZENE	11	U		10	U	
ISOPHORONE	11	U		10	U		PENTACHLOROPHENOL	26	U		25	U	
2-NITROPHENOL	11	U		10	U		PHENANTHRENE	11	U		10	U	
2,4-DIMETHYLPHENOL	11	U		10	U		ANTHRACENE	11	U		10	U	
BIS(2-CHLOROETHOXY)METHANE	11	U		10	U		CARBAZOLE	11	U		10	U	
2,4-DICHLOROPHENOL	11	U		10	U		DI-N-BUTYLPHTHALATE	11	U-B		10	U	
1,2,4-TRICHLOROBENZENE	11	U		10	U		FLUORANTHENE	11	U		10	U	
NAPHTHALENE	11	U		10	U		PYRENE	11	U		10	U	
4-CHLOROANILINE	11	UJ-K		10	UJ-K		BUTYLBENZYLPHTHALATE	11	U		10	U	
HEXACHLOROBUTADIENE	11	U		10	U		3,3'-DICHLOROBENZIDINE	11	UJ-K		10	UJ-K	
4-CHLORO-3-METHYLPHENOL	11	U		10	U		BENZO(A)ANTHRACENE	11	U		10	U	
2-METHYLNAPHTHALENE	11	U		10	U		CHRYSENE	11	U		10	U	
HEXACHLOROCYCLOPENTADIENE	11	U		10	U		BIS(2-ETHYLHEXYL)PHTHALATE	30	UJ-B		10	U	
2,4,6-TRICHLOROPHENOL	11	U		10	U		DI-N-OCTYLPHTHALATE	11	U		10	U	
2,4,5-TRICHLOROPHENOL	26	U		25	U		BENZO(B)FLUORANTHENE	11	U		10	U	
2-CHLORONAPHTHALENE	11	U		10	U		BENZO(K)FLUORANTHENE	11	U		10	U	
2-NITROANILINE	26	U		25	U		BENZO(A)PYRENE	11	U		10	U	
DIMETHYLPHTHALATE	11	U		10	U		INDENO(1,2,3-CD)PYRENE	11	U		10	U	
ACENAPHTHYLENE	11	U		10	U		DIBENZ(A,H)ANTHRACENE	11	U		10	U	
2,6-DINITROTOLUENE	11	U		10	U		BENZO(G,H,I)PERYLENE	11	U		10	U	
3-NITROANILINE	26	U		25	U								
ACENAPHTHENE	11	U		10	U								

TABLE B-5
NAVAL FUEL DEPOT POINT MOLATE
AREA 11: NORTH SHORELINE
ANALYTICAL RESULTS OF SVOCS IN GROUNDWATER SAMPLES

Project : POINT MOLATE
Lab. : ETCMP
FILTER : area ='AREA 11' AND SMPTYPE='ORIG' AND TIC='N'
Date : 06/20/94 18:18:19

PRC Sample ID	MW11-08(22.0)			MW11-40(17)				MW11-08(22.0)			MW11-40(17)		
Lab Samp Id	9403108-01C			9404010-04C				9403108-01C			9404010-04C		
Matrix	WATER			WATER				WATER			WATER		
Units	UG/L			UG/L				UG/L			UG/L		
Date Received	03/23/94			04/01/94				03/23/94			04/01/94		
Date Extracted	03/24/94			04/04/94				03/24/94			04/04/94		
Date Analyzed	04/13/94			04/28/94				04/13/94			04/28/94		
Compound	Result	Val	Com	Result	Val	Com	Compound	Result	Val	Com	Result	Val	Com
PHENOL	10	U		10	U		2,4-DINITROPHENOL	26	U		25	U	
BIS(2-CHLOROETHYL)ETHER	10	U		10	U		4-NITROPHENOL	26	U		25	U	
2-CHLOROPHENOL	10	U		10	U		DIBENZOFURAN	10	U		10	U	
1,3-DICHLOROBENZENE	10	U		10	U		2,4-DINITROTOLUENE	10	U		10	U	
1,4-DICHLOROBENZENE	10	U		10	U		DIETHYLPHTHALATE	10	U		10	U	
1,2-DICHLOROBENZENE	10	U		10	U		4-CHLOROPHENYL-PHENYLETHER	10	U		10	U	
2-METHYLPHENOL	10	U		10	U		FLUORENE	10	U		10	U	
2,2'-OXYBIS(1-CHLOROPROPANE)	10	U		10	U		4-NITROANILINE	26	U		25	U	
4-METHYLPHENOL	10	U		10	U		4,6-DINITRO-2-METHYLPHENOL	26	U		25	U	
N-NITROSO-DI-N-PROPYLAMINE	10	U		10	U		N-NITROSODIPHENYLAMINE (1)	10	U		10	UJ-K	
HEXACHLOROETHANE	10	U		10	U		4-BROMOPHENYL-PHENYLETHER	10	U		10	U	
NITROBENZENE	10	U		10	U		HEXACHLOROBENZENE	10	U		10	U	
ISOPHORONE	10	U		10	U		PENTACHLOROPHENOL	26	U		25	U	
2-NITROPHENOL	10	U		10	U		PHENANTHRENE	10	U		21		
2,4-DIMETHYLPHENOL	10	U		10	U		ANTHRACENE	10	U		10	U	
BIS(2-CHLOROETHOXY)METHANE	10	U		10	U		CARBAZOLE	10	U		10	U	
2,4-DICHLOROPHENOL	10	U		10	U		DI-N-BUTYLPHTHALATE	10	U		10	U	
1,2,4-TRICHLOROBENZENE	10	U		10	U		FLUORANTHENE	10	U		10	U	
NAPHTHALENE	10	U		10	U		PYRENE	10	U		6	J	
4-CHLOROANILINE	10	UJ-K		10	UJ-K		BUTYLBENZYLPHTHALATE	10	U		10	U	
HEXACHLOROBUTADIENE	10	U		10	U		3,3'-DICHLOROBENZIDINE	10	UJ-K		10	U	
4-CHLORO-3-METHYLPHENOL	10	U		10	U		BENZO(A)ANTHRACENE	10	U		10	U	
2-METHYLNAPHTHALENE	10	U		10	J		CHRYSENE	10	U		10	U	
HEXACHLOROCYCLOPENTADIENE	10	U		10	U		BIS(2-ETHYLHEXYL)PHTHALATE	10	U-B		3	J	
2,4,6-TRICHLOROPHENOL	10	U		10	U		DI-N-OCTYLPHTHALATE	10	U		10	U	
2,4,5-TRICHLOROPHENOL	26	U		25	U		BENZO(B)FLUORANTHENE	10	U		10	U	
2-CHLORONAPHTHALENE	10	U		10	U		BENZO(K)FLUORANTHENE	10	U		10	U	
2-NITROANILINE	26	U		25	U		BENZO(A)PYRENE	10	U		10	U	
DIMETHYLPHTHALATE	10	U		10	U		INDENO(1,2,3-CD)PYRENE	10	U		10	U	
ACENAPHTHYLENE	10	U		10	U		DIBENZ(A,H)ANTHRACENE	10	U		10	U	
2,6-DINITROTOLUENE	10	U		10	U		BENZO(G,H,I)PERYLENE	10	U		10	U	
3-NITROANILINE	26	U		25	U								
ACENAPHTHENE	10	U		10	U								

TABLE B-5
NAVAL FUEL DEPOT POINT MOLATE
AREA 11: NORTH SHORELINE
ANALYTICAL RESULTS OF SVOCS IN GROUNDWATER SAMPLES

Project : POINT MOLATE
Lab. : ETCMP
FILTER : area ='AREA 11' AND SMPTYPE='ORIG' AND TIC='N'
Date : 06/20/94 18:18:19

PRC Sample ID	MW11-92(19)			MW11-95(19)				MW11-92(19)			MW11-95(19)		
Lab Samp Id	9403145-01C			9403146-01C				9403145-01C			9403146-01C		
Matrix	WATER			WATER				WATER			WATER		
Units	UG/L			UG/L				UG/L			UG/L		
Date Received	03/30/94			03/30/94				03/30/94			03/30/94		
Date Extracted	03/31/94			04/04/94				03/31/94			04/04/94		
Date Analyzed	04/25/94			04/26/94				04/25/94			04/26/94		
Compound	Result	Val	Com	Result	Val	Com	Compound	Result	Val	Com	Result	Val	Com
PHENOL	10	U		10	U		2,4-DINITROPHENOL	25	U		26	U	
BIS(2-CHLOROETHYL)ETHER	10	U		10	U		4-NITROPHENOL	25	U		26	U	
2-CHLOROPHENOL	10	U		10	U		DIBENZOFURAN	10	U		10	U	
1,3-DICHLOROBENZENE	10	U		10	U		2,4-DINITROTOLUENE	10	U		10	U	
1,4-DICHLOROBENZENE	10	U		10	U		DIETHYLPHTHALATE	10	U		10	U	
1,2-DICHLOROBENZENE	10	U		10	U		4-CHLOROPHENYL-PHENYLETHER	10	U		10	U	
2-METHYLPHENOL	10	U		10	U		FLUORENE	10	U		10	U	
2,2'-OXYBIS(1-CHLOROPROPANE)	10	U		10	U		4-NITROANILINE	25	U		26	U	
4-METHYLPHENOL	10	U		10	U		4,6-DINITRO-2-METHYLPHENOL	25	U		26	U	
N-NITROSO-DI-N-PROPYLAMINE	10	U		10	U		N-NITROSODIPHENYLAMINE (1)	10	UJ-K		10	UJ-K	
HEXACHLOROETHANE	10	U		10	U		4-BROMOPHENYL-PHENYLETHER	10	U		10	UJ-K	
NITROBENZENE	10	U		10	U		HEXACHLOROBENZENE	10	UJ-K		10	UJ-K	
ISOPHORONE	10	U		10	U		PENTACHLOROPHENOL	25	U		26	U	
2-NITROPHENOL	10	U		10	U		PHENANTHRENE	10	U		10	U	
2,4-DIMETHYLPHENOL	10	U		10	U		ANTHRACENE	10	U		10	U	
BIS(2-CHLOROETHOXY)METHANE	10	U		10	U		CARBAZOLE	10	UJ-K		10	U	
2,4-DICHLOROPHENOL	10	U		10	U		DI-N-BUTYLPHTHALATE	10	U		10	U	
1,2,4-TRICHLOROBENZENE	10	U		10	U		FLUORANTHENE	10	U		10	U	
NAPHTHALENE	10	U		10	U		PYRENE	10	U		10	U	
4-CHLOROANILINE	10	UJ-K		10	UJ-K		BUTYLBENZYLPHTHALATE	10	U		10	U	
HEXACHLOROBUTADIENE	10	U		10	U		3,3'-DICHLOROBENZIDINE	10	UJ-K		10	UJ-K	
4-CHLORO-3-METHYLPHENOL	10	U		10	U		BENZO(A)ANTHRACENE	10	U		10	U	
2-METHYLNAPHTHALENE	9	J		9	J		CHRYSENE	10	U		10	U	
HEXACHLOROCYCLOPENTADIENE	10	U		10	U		BIS(2-ETHYLHEXYL)PHTHALATE	10	U-B		10	U	
2,4,6-TRICHLOROPHENOL	10	U		10	U		DI-N-OCTYLPHTHALATE	10	U		10	U	
2,4,5-TRICHLOROPHENOL	25	U		26	U		BENZO(B)FLUORANTHENE	10	U		10	U	
2-CHLORONAPHTHALENE	10	U		10	U		BENZO(K)FLUORANTHENE	10	U		10	U	
2-NITROANILINE	25	U		26	U		BENZO(A)PYRENE	10	U		10	U	
DIMETHYLPHTHALATE	10	U		10	U		INDENO(1,2,3-CD)PYRENE	10	U		10	U	
ACENAPHTHYLENE	10	U		10	U		DIBENZ(A,H)ANTHRACENE	10	U		10	U	
2,6-DINITROTOLUENE	10	U		10	U		BENZO(G,H,I)PERYLENE	10	U		10	U	
3-NITROANILINE	25	UJ-K		26	U								
ACENAPHTHENE	1	J		3	J								

TABLE B-5
NAVAL FUEL DEPOT POINT MOLATE
AREA 11: NORTH SHORELINE
ANALYTICAL RESULTS OF SVOCS IN GROUNDWATER SAMPLES

Project : POINT MOLATE
Lab. : ETCMP
FILTER : area ='AREA 11' AND SMPTYPE='ORIG' AND TIC='N'
Date : 06/20/94 18:18:19

PRC Sample ID	MW11-13(26)			MW11-93(22)				MW11-13(26)			MW11-93(22)		
Lab Samp Id	9403138-02C			9404010-01C				9403138-02C			9404010-01C		
Matrix	WATER			WATER				WATER			WATER		
Units	UG/L			UG/L				UG/L			UG/L		
Date Received	03/29/94			04/01/94				03/29/94			04/01/94		
Date Extracted	03/31/94			04/04/94				03/31/94			04/04/94		
Date Analyzed	05/09/94			04/26/94				05/09/94			04/26/94		
Compound	Result	Val	Com	Result	Val	Com	Compound	Result	Val	Com	Result	Val	Com
PHENOL	10	U		10	U		2,4-DINITROPHENOL	26	U		25	U	
BIS(2-CHLOROETHYL)ETHER	10	U		10	U		4-NITROPHENOL	26	U		25	U	
2-CHLOROPHENOL	10	U		10	U		DIBENZOFURAN	3	J		2	J	
1,3-DICHLOROBENZENE	10	U		10	U		2,4-DINITROTOLUENE	10	U		10	U	
1,4-DICHLOROBENZENE	5	J		10	U		DIETHYLPHTHALATE	10	U		10	U	
1,2-DICHLOROBENZENE	10	U		10	U		4-CHLOROPHENYL-PHENYLETHER	10	U		10	U	
2-METHYLPHENOL	10	U		10	U		FLUORENE	4	J		5	J	
2,2'-OXYBIS(1-CHLOROPROPANE)	10	U		10	U		4-NITROANILINE	26	U		25	U	
4-METHYLPHENOL	10	U		10	U		4,6-DINITRO-2-METHYLPHENOL	26	U		25	U	
N-NITROSO-DI-N-PROPYLAMINE	10	U		10	U		N-NITROSODIPHENYLAMINE (1)	10	U		10	UJ-K	
HEXACHLOROETHANE	10	U		10	U		4-BROMOPHENYL-PHENYLETHER	10	U		10	UJ-K	
NITROBENZENE	10	U		10	U		HEXACHLOROBENZENE	10	U		10	UJ-K	
ISOPHORONE	10	U		10	U		PENTACHLOROPHENOL	26	U		25	U	
2-NITROPHENOL	10	U		10	U		PHENANTHRENE	10	U		10	U	
2,4-DIMETHYLPHENOL	10	U		10	U		ANTHRACENE	10	U		10	U	
BIS(2-CHLOROETHOXY)METHANE	10	U		10	U		CARBAZOLE	10	U		10	UJ-K	
2,4-DICHLOROPHENOL	10	U		10	U		DI-N-BUTYLPHTHALATE	10	U		10	U	
1,2,4-TRICHLOROBENZENE	10	U		10	U		FLUORANTHENE	10	U		10	U	
NAPHTHALENE	10	U		10	U		PYRENE	10	U		10	U	
4-CHLOROANILINE	10	UJ-K		10	UJ-K		BUTYLBENZYLPHTHALATE	10	U		10	U	
HEXACHLOROBUTADIENE	10	UJ-K		10	U		3,3'-DICHLOROBENZIDINE	10	UJ-K		10	UJ-K	
4-CHLORO-3-METHYLPHENOL	10	U		10	U		BENZO(A)ANTHRACENE	10	U		10	U	
2-METHYLNAPHTHALENE	13			61			CHRYSENE	10	U		10	U	
HEXACHLOROCYCLOPENTADIENE	10	U		10	U		BIS(2-ETHYLHEXYL)PHTHALATE	10	U-B		10	U	
2,4,6-TRICHLOROPHENOL	10	U		10	U		DI-N-OCTYLPHTHALATE	10	U		10	U	
2,4,5-TRICHLOROPHENOL	26	U		25	U		BENZO(B)FLUORANTHENE	10	U		10	U	
2-CHLORONAPHTHALENE	10	U		10	U		BENZO(K)FLUORANTHENE	10	U		10	U	
2-NITROANILINE	26	U		25	U		BENZO(A)PYRENE	10	U		10	U	
DIMETHYLPHTHALATE	10	U		10	U		INDENO(1,2,3-CD)PYRENE	10	U		10	U	
ACENAPHTHYLENE	10	U		10	U		DIBENZ(A,H)ANTHRACENE	10	U		10	U	
2,6-DINITROTOLUENE	10	U		10	U		BENZO(G,H,I)PERYLENE	10	U		10	U	
3-NITROANILINE	26	U		25	U								
ACENAPHTHENE	3	J		2	J								

TABLE B-5
NAVAL FUEL DEPOT POINT MOLATE
AREA 11: NORTH SHORELINE
ANALYTICAL RESULTS OF SVOCS IN GROUNDWATER SAMPLES

Project : POINT MOLATE
Lab. : ETCMP
FILTER : area ='AREA 11' AND SMPTYPE='ORIG' AND TIC='N'
Date : 06/20/94 18:18:19

PRC Sample ID	MW11-54(23)			MW11-96(23)				MW11-54(23)			MW11-96(23)		
Lab Samp Id	9403139-01C			9403139-02C				9403139-01C			9403139-02C		
Matrix	WATER			WATER				WATER			WATER		
Units	UG/L			UG/L				UG/L			UG/L		
Date Received	03/29/94			03/29/94				03/29/94			03/29/94		
Date Extracted	03/31/94			03/31/94				03/31/94			03/31/94		
Date Analyzed	04/22/94			04/23/94				04/22/94			04/23/94		
Compound	Result	Val	Com	Result	Val	Com	Compound	Result	Val	Com	Result	Val	Com
PHENOL	10	U		10	U		2,4-DINITROPHENOL	26	U		25	U	
BIS(2-CHLOROETHYL)ETHER	10	U		10	U		4-NITROPHENOL	26	U		25	U	
2-CHLOROPHENOL	10	U		10	U		DIBENZOFURAN	2	J		10	U	
1,3-DICHLOROBENZENE	10	U		10	U		2,4-DINITROTOLUENE	10	U		10	U	
1,4-DICHLOROBENZENE	10	U		10	U		DIETHYLPHTHALATE	10	U		10	U	
1,2-DICHLOROBENZENE	10	U		10	U		4-CHLOROPHENYL-PHENYLETHER	10	U		10	U	
2-METHYLPHENOL	10	U		10	U		FLUORENE	3	J		3	J	
2,2'-OXYBIS(1-CHLOROPROPANE)	10	U		10	U		4-NITROANILINE	26	UJ-K		25	U	
4-METHYLPHENOL	3	J		10	U		4,6-DINITRO-2-METHYLPHENOL	26	U		25	U	
N-NITROSO-DI-N-PROPYLAMINE	10	U		10	U		N-NITROSODIPHENYLAMINE (1)	10	UJ-K		10	UJ-K	
HEXACHLOROETHANE	10	U		10	U		4-BROMOPHENYL-PHENYLETHER	10	U		10	U	
NITROBENZENE	10	U		10	U		HEXACHLOROBENZENE	10	U		10	U	
ISOPHORONE	10	U		10	U		PENTACHLOROPHENOL	26	U		25	U	
2-NITROPHENOL	10	U		10	U		PHENANTHRENE	2	J		2	J	
2,4-DIMETHYLPHENOL	10	U		10	U		ANTHRACENE	10	U		10	U	
BIS(2-CHLOROETHOXY)METHANE	10	U		10	U		CARBAZOLE	10	UJ-K		10	UJ-K	
2,4-DICHLOROPHENOL	10	U		10	U		DI-N-BUTYLPHTHALATE	10	U		0.5	J-K	
1,2,4-TRICHLOROBENZENE	10	U		10	U		FLUORANTHENE	10	U		10	U	
NAPHTHALENE	10	U		10	U		PYRENE	10	U		10	UJ-K	
4-CHLOROANILINE	10	UJ-K		10	UJ-K		BUTYLBENZYLPHTHALATE	10	UJ-K		10	UJ-K	
HEXACHLOROBUTADIENE	10	U		10	U		3,3'-DICHLOROBENZIDINE	10	U		10	U	
4-CHLORO-3-METHYLPHENOL	10	U		10	U		BENZO(A)ANTHRACENE	10	U		10	U	
2-METHYLNAPHTHALENE	24			23			CHRYSENE	10	U		10	U	
HEXACHLOROCYCLOPENTADIENE	10	U		10	U		BIS(2-ETHYLHEXYL)PHTHALATE	10	U-B		10	UJ-BK	
2,4,6-TRICHLOROPHENOL	10	U		10	U		DI-N-OCTYLPHTHALATE	10	U		10	U	
2,4,5-TRICHLOROPHENOL	26	U		25	U		BENZO(B)FLUORANTHENE	10	U		10	U	
2-CHLORONAPHTHALENE	10	U		10	U		BENZO(K)FLUORANTHENE	10	U		10	U	
2-NITROANILINE	26	U		25	U		BENZO(A)PYRENE	10	U		10	U	
DIMETHYLPHTHALATE	10	U		10	U		INDENO(1,2,3-CD)PYRENE	10	U		10	U	
ACENAPHTHYLENE	10	U		10	U		DIBENZ(A,H)ANTHRACENE	10	U		10	U	
2,6-DINITROTOLUENE	10	U		10	U		BENZO(G,H,I)PERYLENE	10	U		10	U	
3-NITROANILINE	26	U		25	U								
ACENAPHTHENE	10	U		10	U								

TABLE B-5
NAVAL FUEL DEPOT POINT MOLATE
AREA 11: NORTH SHORELINE
ANALYTICAL RESULTS OF SVOCS IN GROUNDWATER SAMPLES

Project : POINT MOLATE
Lab. : ETCMP
FILTER : area ='AREA 11' AND SMPTYPE='ORIG' AND TIC='N'
Date : 06/20/94 18:18:19

PRC Sample ID	MW11-21(22)			MW11-55(23.0)				MW11-21(22)			MW11-55(23.0)		
Lab Samp Id	9403145-02C			9403109-02C				9403145-02C			9403109-02C		
Matrix	WATER			WATER				WATER			WATER		
Units	UG/L			UG/L				UG/L			UG/L		
Date Received	03/30/94			03/23/94				03/30/94			03/23/94		
Date Extracted	03/31/94			03/24/94				03/31/94			03/24/94		
Date Analyzed	04/25/94			04/14/94				04/25/94			04/14/94		
Compound	Result	Val	Com	Result	Val	Com	Compound	Result	Val	Com	Result	Val	Com
PHENOL	10	U		10	U		2,4-DINITROPHENOL	25	U		25	U	
BIS(2-CHLOROETHYL)ETHER	10	U		10	U		4-NITROPHENOL	25	U		25	U	
2-CHLOROPHENOL	10	U		10	U		DIBENZOFURAN	10	U		10	U	
1,3-DICHLOROBENZENE	10	U		10	U		2,4-DINITROTOLUENE	10	U		10	U	
1,4-DICHLOROBENZENE	10	U		10	U		DIETHYLPHTHALATE	10	U		10	U	
1,2-DICHLOROBENZENE	10	U		10	U		4-CHLOROPHENYL-PHENYLETHER	10	U		10	U	
2-METHYLPHENOL	10	U		10	U		FLUORENE	10	U		10	U	
2,2'-OXYBIS(1-CHLOROPROPANE)	10	U		10	U		4-NITROANILINE	25	U		25	U	
4-METHYLPHENOL	10	U		10	U		4,6-DINITRO-2-METHYLPHENOL	25	U		25	U	
N-NITROSO-DI-N-PROPYLAMINE	10	U		10	U		N-NITROSODIPHENYLAMINE (1)	10	UJ-K		10	U	
HEXACHLOROETHANE	10	U		10	U		4-BROMOPHENYL-PHENYLETHER	10	U		10	U	
NITROBENZENE	10	U		10	U		HEXACHLOROBENZENE	10	UJ-K		10	U	
ISOPHORONE	10	U		10	U		PENTACHLOROPHENOL	25	U		25	U	
2-NITROPHENOL	10	U		10	U		PHENANTHRENE	10	U		10	U	
2,4-DIMETHYLPHENOL	10	U		10	U		ANTHRACENE	10	U		10	U	
BIS(2-CHLOROETHOXY)METHANE	10	U		10	U		CARBAZOLE	10	UJ-K		10	U	
2,4-DICHLOROPHENOL	10	U		10	U		DI-N-BUTYLPHTHALATE	10	U		10	U	
1,2,4-TRICHLOROBENZENE	10	U		10	U		FLUORANTHENE	10	U		10	U	
NAPHTHALENE	10	U		10	U		PYRENE	10	U		10	U	
4-CHLOROANILINE	10	UJ-K		10	UJ-K		BUTYLBENZYLPHTHALATE	10	U		10	U	
HEXACHLOROBUTADIENE	10	U		10	U		3,3'-DICHLOROBENZIDINE	10	UJ-K		10	UJ-K	
4-CHLORO-3-METHYLPHENOL	10	U		10	U		BENZO(A)ANTHRACENE	10	U		10	U	
2-METHYLNAPHTHALENE	10	U		10	U		CHRYSENE	10	U		10	U	
HEXACHLOROCYCLOPENTADIENE	10	U		10	U		BIS(2-ETHYLHEXYL)PHTHALATE	10	U-B		10	U-B	
2,4,6-TRICHLOROPHENOL	10	U		10	U		DI-N-OCTYLPHTHALATE	10	U		10	U	
2,4,5-TRICHLOROPHENOL	25	U		25	U		BENZO(B)FLUORANTHENE	10	U		10	U	
2-CHLORONAPHTHALENE	10	U		10	U		BENZO(K)FLUORANTHENE	10	U		10	U	
2-NITROANILINE	25	U		25	U		BENZO(A)PYRENE	10	U		10	U	
DIMETHYLPHTHALATE	10	U		10	U		INDENO(1,2,3-CD)PYRENE	10	U		10	U	
ACENAPHTHYLENE	10	U		10	U		DIBENZ(A,H)ANTHRACENE	10	U		10	U	
2,6-DINITROTOLUENE	10	U		10	U		BENZO(G,H,I)PERYLENE	10	U		10	U	
3-NITROANILINE	25	UJ-K		25	U								
ACENAPHTHENE	10	U		10	U								

TABLE B-5
NAVAL FUEL DEPOT POINT MOLATE
AREA 11: NORTH SHORELINE
ANALYTICAL RESULTS OF SVOCS IN GROUNDWATER SAMPLES

Project : POINT MOLATE
Lab. : ETCMP
FILTER : area ='AREA 11' AND SMPTYPE='ORIG' AND TIC='N'
Date : 06/20/94 18:18:19

PRC Sample ID	MW11-19(23.0)			MW11-56(22)				MW11-19(23.0)			MW11-56(22)		
Lab Samp Id	9403108-03C			9404010-02C				9403108-03C			9404010-02C		
Matrix	WATER			WATER				WATER			WATER		
Units	UG/L			UG/L				UG/L			UG/L		
Date Received	03/23/94			04/01/94				03/23/94			04/01/94		
Date Extracted	03/24/94			04/04/94				03/24/94			04/04/94		
Date Analyzed	04/14/94			04/26/94				04/14/94			04/26/94		
Compound	Result	Val	Com	Result	Val	Com	Compound	Result	Val	Com	Result	Val	Com
PHENOL	10	U		10	U		2,4-DINITROPHENOL	26	U		25	U	
BIS(2-CHLOROETHYL)ETHER	10	U		10	U		4-NITROPHENOL	26	U		25	U	
2-CHLOROPHENOL	10	U		10	U		DIBENZOFURAN	10	U		10	U	
1,3-DICHLOROBENZENE	10	U		10	U		2,4-DINITROTOLUENE	10	U		10	U	
1,4-DICHLOROBENZENE	10	U		10	U		DIETHYLPHTHALATE	10	U		10	U	
1,2-DICHLOROBENZENE	10	U		10	U		4-CHLOROPHENYL-PHENYLETHER	10	U		10	U	
2-METHYLPHENOL	10	U		10	U		FLUORENE	10	U		10	U	
2,2'-OXYBIS(1-CHLOROPROPANE)	10	U		10	U		4-NITROANILINE	26	U		25	U	
4-METHYLPHENOL	10	U		10	U		4,6-DINITRO-2-METHYLPHENOL	26	U		25	U	
N-NITROSO-DI-N-PROPYLAMINE	10	U		10	U		N-NITROSODIPHENYLAMINE (1)	10	U		10	UJ-K	
HEXACHLOROETHANE	10	U		10	U		4-BROMOPHENYL-PHENYLETHER	10	U		10	UJ-K	
NITROBENZENE	10	U		10	U		HEXACHLOROBENZENE	10	U		10	UJ-K	
ISOPHORONE	10	U		10	U		PENTACHLOROPHENOL	26	U		25	U	
2-NITROPHENOL	10	U		10	U		PHENANTHRENE	10	U		10	U	
2,4-DIMETHYLPHENOL	10	U		10	U		ANTHRACENE	10	U		10	U	
BIS(2-CHLOROETHOXY)METHANE	10	U		10	U		CARBAZOLE	10	U		10	U	
2,4-DICHLOROPHENOL	10	U		10	U		DI-N-BUTYLPHTHALATE	10	U		10	U	
1,2,4-TRICHLOROBENZENE	10	U		10	U		FLUORANTHENE	10	U		10	U	
NAPHTHALENE	10	U		10	U		PYRENE	10	U		10	U	
4-CHLOROANILINE	10	UJ-K		10	UJ-K		BUTYLBENZYLPHTHALATE	10	U-B		10	U	
HEXACHLOROBUTADIENE	10	U		10	U		3,3'-DICHLOROBENZIDINE	10	UJ-K		10	UJ-K	
4-CHLORO-3-METHYLPHENOL	10	U		10	U		BENZO(A)ANTHRACENE	10	U		10	U	
2-METHYLNAPHTHALENE	1	J		10	U		CHRYSENE	10	U		10	U	
HEXACHLOROCYCLOPENTADIENE	10	U		10	U		BIS(2-ETHYLHEXYL)PHTHALATE	10	U-B		10	U	
2,4,6-TRICHLOROPHENOL	10	U		10	U		DI-N-OCTYLPHTHALATE	10	U		10	U	
2,4,5-TRICHLOROPHENOL	26	U		25	U		BENZO(B)FLUORANTHENE	10	U		10	U	
2-CHLORONAPHTHALENE	10	U		10	U		BENZO(K)FLUORANTHENE	10	U		10	U	
2-NITROANILINE	26	U		25	U		BENZO(A)PYRENE	10	U		10	U	
DIMETHYLPHTHALATE	10	U		10	U		INDENO(1,2,3-CD)PYRENE	10	U		10	U	
ACENAPHTHYLENE	10	U		10	U		DIBENZ(A,H)ANTHRACENE	10	U		10	U	
2,6-DINITROTOLUENE	10	U		10	U		BENZO(G,H,I)PERYLENE	10	U		10	U	
3-NITROANILINE	26	U		25	U								
ACENAPHTHENE	10	U		10	U								

TABLE B-5
NAVAL FUEL DEPOT POINT MOLATE
AREA 11: NORTH SHORELINE
ANALYTICAL RESULTS OF SVOCS IN GROUNDWATER SAMPLES

Project : POINT MOLATE
Lab. : ETCMP
FILTER : area ='AREA 11' AND SMPTYPE='ORIG' AND TIC='N'
Date : 06/20/94 18:18:19

PRC Sample ID	MW11-57(23)							MW11-57(23)					
Lab Samp Id	9403138-05C							9403138-05C					
Matrix	WATER							WATER					
Units	UG/L							UG/L					
Date Received	03/29/94							03/29/94					
Date Extracted	03/31/94							03/31/94					
Date Analyzed	04/25/94							04/25/94					
Compound	Result	Val	Com	Result	Val	Com	Compound	Result	Val	Com	Result	Val	Com
PHENOL	10	U					2,4-DINITROPHENOL	26	U				
BIS(2-CHLOROETHYL)ETHER	10	U					4-NITROPHENOL	26	U				
2-CHLOROPHENOL	10	U					DIBENZOFURAN	10	U				
1,3-DICHLOROBENZENE	10	U					2,4-DINITROTOLUENE	10	U				
1,4-DICHLOROBENZENE	10	U					DIETHYLPHTHALATE	10	U				
1,2-DICHLOROBENZENE	10	U					4-CHLOROPHENYL-PHENYLETHER	10	U				
2-METHYLPHENOL	10	U					FLUORENE	10	U				
2,2'-OXYBIS(1-CHLOROPROPANE)	10	U					4-NITROANILINE	26	U				
4-METHYLPHENOL	10	U					4,6-DINITRO-2-METHYLPHENOL	26	U				
N-NITROSO-DI-N-PROPYLAMINE	10	U					N-NITROSODIPHENYLAMINE (1)	10	UJ-K				
HEXACHLOROETHANE	10	U					4-BROMOPHENYL-PHENYLETHER	10	U				
NITROBENZENE	10	U					HEXACHLOROBENZENE	10	UJ-K				
ISOPHORONE	10	U					PENTACHLOROPHENOL	26	U				
2-NITROPHENOL	10	U					PHENANTHRENE	10	U				
2,4-DIMETHYLPHENOL	10	U					ANTHRACENE	10	U				
BIS(2-CHLOROETHOXY)METHANE	10	U					CARBAZOLE	10	UJ-K				
2,4-DICHLOROPHENOL	10	U					DI-N-BUTYLPHTHALATE	10	U				
1,2,4-TRICHLOROBENZENE	10	U					FLUORANTHENE	10	U				
NAPHTHALENE	10	U					PYRENE	10	U				
4-CHLOROANILINE	10	UJ-K					BUTYLBENZYLPHTHALATE	10	U				
HEXACHLOROBUTADIENE	10	U					3,3'-DICHLOROBENZIDINE	10	UJ-K				
4-CHLORO-3-METHYLPHENOL	10	U					BENZO(A)ANTHRACENE	10	U				
2-METHYLNAPHTHALENE	10	U					CHRYSENE	10	U				
HEXACHLOROCYCLOPENTADIENE	10	U					BIS(2-ETHYLHEXYL)PHTHALATE	10	U				
2,4,6-TRICHLOROPHENOL	10	U					DI-N-OCTYLPHTHALATE	10	U				
2,4,5-TRICHLOROPHENOL	26	U					BENZO(B)FLUORANTHENE	10	U				
2-CHLORONAPHTHALENE	10	U					BENZO(K)FLUORANTHENE	10	U				
2-NITROANILINE	26	U					BENZO(A)PYRENE	10	U				
DIMETHYLPHTHALATE	10	U					INDENO(1,2,3-CD)PYRENE	10	U				
ACENAPHTHYLENE	10	U					DIBENZ(A,H)ANTHRACENE	10	U				
2,6-DINITROTOLUENE	10	U					BENZO(G,H,I)PERYLENE	10	U				
3-NITROANILINE	26	UJ-K											
ACENAPHTHENE	10	U											

TABLE B-6
NAVAL FUEL DEPOT POINT MOLATE
AREA 10: SOUTH SHORELINE
ANALYTICAL RESULTS OF SVOCS IN GROUNDWATER SAMPLES

Project : POINT MOLATE
Lab. : ETCMP
FILTER : area ='AREA 10' AND SMPTYPE='ORIG' AND TIC='N'
Date : 06/20/94 16:54:24

PRC Sample ID	MW10-04 (21.0)			MW10-97(21.0)				MW10-04 (21.0)			MW10-97(21.0)		
Lab Samp Id	9403127-01C			9403128-01C				9403127-01C			9403128-01C		
Matrix	WATER			WATER				WATER			WATER		
Units	UG/L			UG/L				UG/L			UG/L		
Date Received	03/28/94			03/28/94				03/28/94			03/28/94		
Date Extracted	03/28/94			03/28/94				03/28/94			03/28/94		
Date Analyzed	04/22/94			04/23/94				04/22/94			04/23/94		
Compound	Result	Val	Com	Result	Val	Com	Compound	Result	Val	Com	Result	Val	Com
PHENOL	10	U		10	U		2,4-DINITROPHENOL	26	U		25	U	
BIS(2-CHLOROETHYL)ETHER	10	U		10	U		4-NITROPHENOL	26	U		25	U	
2-CHLOROPHENOL	10	U		10	U		DIBENZOFURAN	10	U		10	U	
1,3-DICHLOROBENZENE	10	U		10	U		2,4-DINITROTOLUENE	10	U		10	U	
1,4-DICHLOROBENZENE	10	U		10	U		DIETHYLPHTHALATE	10	U		10	U	
1,2-DICHLOROBENZENE	10	U		10	U		4-CHLOROPHENYL-PHENYLETHER	10	U		10	U	
2-METHYLPHENOL	10	U		10	U		FLUORENE	10	U		10	U	
2,2'-OXYBIS(1-CHLOROPROPANE)	10	U		10	U		4-NITROANILINE	26	UJ-K		25	U	
4-METHYLPHENOL	4	J		4	J		4,6-DINITRO-2-METHYLPHENOL	26	U		25	U	
N-NITROSO-DI-N-PROPYLAMINE	10	U		10	U		N-NITROSODIPHENYLAMINE (1)	4	J-K		10	UJ-K	
HEXACHLOROETHANE	10	U		10	U		4-BROMOPHENYL-PHENYLETHER	10	U		10	U	
NITROBENZENE	10	U		10	U		HEXACHLOROBENZENE	10	U		10	U	
ISOPHORONE	10	U		10	U		PENTACHLOROPHENOL	26	U		25	U	
2-NITROPHENOL	10	U		10	U		PHENANTHRENE	10	U		10	U	
2,4-DIMETHYLPHENOL	10	U		10	U		ANTHRACENE	10	U		10	U	
BIS(2-CHLOROETHOXY)METHANE	10	U		10	U		CARBAZOLE	10	UJ-K		10	UJ-K	
2,4-DICHLOROPHENOL	10	U		10	U		DI-N-BUTYLPHTHALATE	10	U-B		10	UJ-BK	
1,2,4-TRICHLOROBENZENE	10	U		10	U		FLUORANTHENE	10	U		10	U	
NAPHTHALENE	10	U		10	U		PYRENE	10	U		10	UJ-K	
4-CHLOROANILINE	10	UJ-K		10	UJ-K		BUTYLBENZYLPHTHALATE	10	UJ-K		10	UJ-K	
HEXACHLOROBUTADIENE	10	U		10	U		3,3'-DICHLOROBENZIDINE	10	U		10	U	
4-CHLORO-3-METHYLPHENOL	10	U		10	U		BENZO(A)ANTHRACENE	10	U		10	U	
2-METHYLNAPHTHALENE	10	U		10	U		CHRYSENE	10	U		10	U	
HEXACHLOROCYCLOPENTADIENE	10	U		10	U		BIS(2-ETHYLHEXYL)PHTHALATE	10	U-B		10	UJ-BK	
2,4,6-TRICHLOROPHENOL	10	U		10	U		DI-N-OCTYLPHTHALATE	10	U		10	U	
2,4,5-TRICHLOROPHENOL	26	U		25	U		BENZO(B)FLUORANTHENE	10	U		10	U	
2-CHLORONAPHTHALENE	10	U		10	U		BENZO(K)FLUORANTHENE	10	U		10	U	
2-NITROANILINE	26	U		25	U		BENZO(A)PYRENE	10	U		10	U	
DIMETHYLPHTHALATE	10	U		10	U		INDENO(1,2,3-CD)PYRENE	10	U		10	U	
ACENAPHTHYLENE	10	U		10	U		DIBENZ(A,H)ANTHRACENE	10	U		10	U	
2,6-DINITROTOLUENE	10	U		10	U		BENZO(G,H,I)PERYLENE	10	U		10	U	
3-NITROANILINE	26	U		25	U								
ACENAPHTHENE	10	U		10	U								

TABLE B-6
NAVAL FUEL DEPOT POINT MOLATE
AREA 10: SOUTH SHORELINE
ANALYTICAL RESULTS OF SVOCS IN GROUNDWATER SAMPLES

Project : POINT MOLATE
Lab. : ETCMP
FILTER : area ='AREA 10' AND SMPTYPE='ORIG' AND TIC='N'
Date : 06/20/94 16:54:24

PRC Sample ID	MW10-05(19.0)			ERM10-01(23)				MW10-05(19.0)			ERM10-01(23)		
Lab Samp Id	9403128-02C			9403138-04C				9403128-02C			9403138-04C		
Matrix	WATER			WATER				WATER			WATER		
Units	UG/L			UG/L				UG/L			UG/L		
Date Received	03/28/94			03/29/94				03/28/94			03/29/94		
Date Extracted	03/28/94			03/31/94				03/28/94			03/31/94		
Date Analyzed	04/22/94			04/25/94				04/22/94			04/25/94		
Compound	Result	Val	Com	Result	Val	Com	Compound	Result	Val	Com	Result	Val	Com
PHENOL	10	U		11	U		2,4-DINITROPHENOL	25	U		27	U	
BIS(2-CHLOROETHYL)ETHER	10	U		11	U		4-NITROPHENOL	25	U		27	U	
2-CHLOROPHENOL	10	U		11	U		DIBENZOFURAN	10	U		11	U	
1,3-DICHLOROBENZENE	10	U		11	U		2,4-DINITROTOLUENE	10	U		11	U	
1,4-DICHLOROBENZENE	10	U		11	U		DIETHYLPHTHALATE	10	U		11	U	
1,2-DICHLOROBENZENE	10	U		11	U		4-CHLOROPHENYL-PHENYLETHER	10	U		11	U	
2-METHYLPHENOL	10	U		11	U		FLUORENE	10	U		11	U	
2,2'-OXYBIS(1-CHLOROPROPANE)	10	U		11	U		4-NITROANILINE	25	UJ-K		27	U	
4-METHYLPHENOL	10	U		11	U		4,6-DINITRO-2-METHYLPHENOL	25	U		27	U	
N-NITROSO-DI-N-PROPYLAMINE	10	U		11	U		N-NITROSODIPHENYLAMINE (1)	10	UJ-K		11	UJ-K	
HEXACHLOROETHANE	10	U		11	U		4-BROMOPHENYL-PHENYLETHER	10	U		11	U	
NITROBENZENE	10	U		11	U		HEXACHLOROBENZENE	10	U		11	UJ-K	
ISOPHORONE	10	U		11	U		PENTACHLOROPHENOL	25	U		27	U	
2-NITROPHENOL	10	U		11	U		PHENANTHRENE	10	U		11	U	
2,4-DIMETHYLPHENOL	10	U		11	U		ANTHRACENE	10	U		11	U	
BIS(2-CHLOROETHOXY)METHANE	10	U		11	U		CARBAZOLE	10	UJ-K		11	UJ-K	
2,4-DICHLOROPHENOL	10	U		11	U		DI-N-BUTYLPHTHALATE	10	U		11	U	
1,2,4-TRICHLOROBENZENE	10	U		11	U		FLUORANTHENE	10	U		11	U	
NAPHTHALENE	10	U		11	U		PYRENE	10	U		11	U	
4-CHLOROANILINE	10	UJ-K		11	UJ-K		BUTYLBENZYLPHTHALATE	10	UJ-BK		11	U	
HEXACHLOROBUTADIENE	10	U		11	U		3,3'-DICHLOROBENZIDINE	10	U		11	UJ-K	
4-CHLORO-3-METHYLPHENOL	10	U		11	U		BENZO(A)ANTHRACENE	10	U		11	U	
2-METHYLNAPHTHALENE	10	U		0.9	J		CHRYSENE	10	U		11	U	
HEXACHLOROCYCLOPENTADIENE	10	U		11	U		BIS(2-ETHYLHEXYL)PHTHALATE	10	U-B		11	U	
2,4,6-TRICHLOROPHENOL	10	U		11	U		DI-N-OCTYLPHTHALATE	10	U		11	U	
2,4,5-TRICHLOROPHENOL	25	U		27	U		BENZO(B)FLUORANTHENE	10	U		11	U	
2-CHLORONAPHTHALENE	10	U		11	U		BENZO(K)FLUORANTHENE	10	U		11	U	
2-NITROANILINE	25	U		27	U		BENZO(A)PYRENE	10	U		11	U	
DIMETHYLPHTHALATE	10	U		11	U		INDENO(1,2,3-CD)PYRENE	10	U		11	U	
ACENAPHTHYLENE	10	U		11	U		DIBENZ(A,H)ANTHRACENE	10	U		11	U	
2,6-DINITROTOLUENE	10	U		11	U		BENZO(G,H,I)PERYLENE	10	U		11	U	
3-NITROANILINE	25	U		27	UJ-K								
ACENAPHTHENE	10	U		11	U								

TABLE B-6
NAVAL FUEL DEPOT POINT MOLATE
AREA 10: SOUTH SHORELINE
ANALYTICAL RESULTS OF SVOCS IN GROUNDWATER SAMPLES

Project : POINT MOLATE
Lab. : ETCMP
FILTER : area ='AREA 10' AND SMPTYPE='ORIG' AND TIC='N'
Date : 06/20/94 16:54:24

PRC Sample ID	ERM10-02(19)			MW10-08 (24.0)				ERM10-02(19)			MW10-08 (24.0)		
Lab Samp Id	9403138-03C			9403127-02C				9403138-03C			9403127-02C		
Matrix	WATER			WATER				WATER			WATER		
Units	UG/L			UG/L				UG/L			UG/L		
Date Received	03/29/94			03/28/94				03/29/94			03/28/94		
Date Extracted	03/31/94			03/28/94				03/31/94			03/28/94		
Date Analyzed	04/25/94			04/19/94				04/25/94			04/19/94		
Compound	Result	Val	Com	Result	Val	Com	Compound	Result	Val	Com	Result	Val	Com
PHENOL	10	U		10	U		2,4-DINITROPHENOL	26	U		26	U	
BIS(2-CHLOROETHYL)ETHER	10	U		10	U		4-NITROPHENOL	26	U		26	U	
2-CHLOROPHENOL	10	U		10	U		DIBENZOFURAN	10	U		10	U	
1,3-DICHLOROBENZENE	10	U		10	U		2,4-DINITROTOLUENE	10	U		10	U	
1,4-DICHLOROBENZENE	10	U		10	U		DIETHYLPHTHALATE	10	U		10	U	
1,2-DICHLOROBENZENE	10	U		10	U		4-CHLOROPHENYL-PHENYLETHER	10	U		10	U	
2-METHYLPHENOL	10	U		10	U		FLUORENE	10	U		10	U	
2,2'-OXYBIS(1-CHLOROPROPANE)	10	U		10	U		4-NITROANILINE	26	U		26	U	
4-METHYLPHENOL	10	U		10	U		4,6-DINITRO-2-METHYLPHENOL	26	U		26	U	
N-NITROSO-DI-N-PROPYLAMINE	10	U		10	U		N-NITROSODIPHENYLAMINE (1)	10	UJ-K		10	UJ-K	
HEXACHLOROETHANE	10	U		10	U		4-BROMOPHENYL-PHENYLETHER	10	U		10	U	
NITROBENZENE	10	U		10	U		HEXACHLOROBENZENE	10	UJ-K		10	U	
ISOPHORONE	10	U		10	U		PENTACHLOROPHENOL	26	U		26	U	
2-NITROPHENOL	10	U		10	U		PHENANTHRENE	10	U		10	U	
2,4-DIMETHYLPHENOL	10	U		10	U		ANTHRACENE	10	U		10	U	
BIS(2-CHLOROETHOXY)METHANE	10	U		10	U		CARBAZOLE	10	UJ-K		10	U	
2,4-DICHLOROPHENOL	10	U		10	U		DI-N-BUTYLPHTHALATE	10	U		10	U	
1,2,4-TRICHLOROBENZENE	10	U		10	U		FLUORANTHENE	10	U		10	U	
NAPHTHALENE	10	U		10	U		PYRENE	10	U		10	U	
4-CHLOROANILINE	10	UJ-K		10	UJ-K		BUTYLBENZYLPHTHALATE	10	U		10	U	
HEXACHLOROBUTADIENE	10	U		10	U		3,3'-DICHLOROBENZIDINE	10	UJ-K		10	UJ-K	
4-CHLORO-3-METHYLPHENOL	10	U		10	U		BENZO(A)ANTHRACENE	10	U		10	U	
2-METHYLNAPHTHALENE	10	U		10	U		CHRYSENE	10	U		10	U	
HEXACHLOROCYCLOPENTADIENE	10	U		10	U		BIS(2-ETHYLHEXYL)PHTHALATE	10	U		10	U	
2,4,6-TRICHLOROPHENOL	10	U		10	U		DI-N-OCTYLPHTHALATE	10	U		10	U	
2,4,5-TRICHLOROPHENOL	26	U		26	U		BENZO(B)FLUORANTHENE	10	U		10	U	
2-CHLORONAPHTHALENE	10	U		10	U		BENZO(K)FLUORANTHENE	10	U		10	U	
2-NITROANILINE	26	U		26	U		BENZO(A)PYRENE	10	U		10	U	
DIMETHYLPHTHALATE	10	U		10	U		INDENO(1,2,3-CD)PYRENE	10	U		10	U	
ACENAPHTHYLENE	10	U		10	U		DIBENZ(A,H)ANTHRACENE	10	U		10	U	
2,6-DINITROTOLUENE	10	U		10	U		BENZO(G,H,I)PERYLENE	10	U		10	U	
3-NITROANILINE	26	UJ-K		26	U								
ACENAPHTHENE	10	U		10	U								

TABLE B-6
NAVAL FUEL DEPOT POINT MOLATE
AREA 10: SOUTH SHORELINE
ANALYTICAL RESULTS OF SVOCS IN GROUNDWATER SAMPLES

Project : POINT MOLATE
Lab. : ETCMP
FILTER : area ='AREA 10' AND SMPTYPE='ORIG' AND TIC='N'
Date : 06/20/94 16:54:24

PRC Sample ID	MW10-09 (19.0)			MW10-98(19.0)				MW10-09 (19.0)			MW10-98(19.0)		
Lab Samp Id	9403127-04C			9403128-03C				9403127-04C			9403128-03C		
Matrix	WATER			WATER				WATER			WATER		
Units	UG/L			UG/L				UG/L			UG/L		
Date Received	03/28/94			03/28/94				03/28/94			03/28/94		
Date Extracted	03/28/94			03/28/94				03/28/94			03/28/94		
Date Analyzed	04/19/94			04/19/94				04/19/94			04/19/94		
Compound	Result	Val	Com	Result	Val	Com	Compound	Result	Val	Com	Result	Val	Com
PHENOL	10	U		10	U		2,4-DINITROPHENOL	26	U		25	U	
BIS(2-CHLOROETHYL)ETHER	10	U		10	U		4-NITROPHENOL	26	U		25	U	
2-CHLOROPHENOL	10	U		10	U		DIBENZOFURAN	10	U		10	U	
1,3-DICHLOROBENZENE	10	U		10	U		2,4-DINITROTOLUENE	10	U		10	U	
1,4-DICHLOROBENZENE	10	U		10	U		DIETHYLPHTHALATE	10	U		10	U	
1,2-DICHLOROBENZENE	10	U		10	U		4-CHLOROPHENYL-PHENYLETHER	10	U		10	U	
2-METHYLPHENOL	10	U		10	U		FLUORENE	10	U		10	U	
2,2'-OXYBIS(1-CHLOROPROPANE)	10	U		10	U		4-NITROANILINE	26	U		25	U	
4-METHYLPHENOL	10	U		10	U		4,6-DINITRO-2-METHYLPHENOL	26	U		25	U	
N-NITROSO-DI-N-PROPYLAMINE	10	U		10	U		N-NITROSODIPHENYLAMINE (1)	10	UJ-K		10	UJ-K	
HEXACHLOROETHANE	10	U		10	U		4-BROMOPHENYL-PHENYLETHER	10	U		10	U	
NITROBENZENE	10	U		10	U		HEXACHLOROBENZENE	10	U		10	U	
ISOPHORONE	10	U		10	U		PENTACHLOROPHENOL	26	U		25	U	
2-NITROPHENOL	10	U		10	U		PHENANTHRENE	10	U		10	U	
2,4-DIMETHYLPHENOL	10	U		10	U		ANTHRACENE	10	U		10	U	
BIS(2-CHLOROETHOXY)METHANE	10	U		10	U		CARBAZOLE	10	U		10	U	
2,4-DICHLOROPHENOL	10	U		10	U		DI-N-BUTYLPHTHALATE	10	U		10	U	
1,2,4-TRICHLOROBENZENE	10	U		10	U		FLUORANTHENE	10	U		10	U	
NAPHTHALENE	10	U		10	U		PYRENE	10	U		10	U	
4-CHLOROANILINE	10	UJ-K		10	UJ-K		BUTYLBENZYLPHTHALATE	10	U		10	U	
HEXACHLOROBUTADIENE	10	U		10	U		3,3'-DICHLOROBENZIDINE	10	UJ-K		10	UJ-K	
4-CHLORO-3-METHYLPHENOL	10	U		10	U		BENZO(A)ANTHRACENE	10	U		10	U	
2-METHYLNAPHTHALENE	10	U		10	U		CHRYSENE	10	U		10	U	
HEXACHLOROCYCLOPENTADIENE	10	U		10	U		BIS(2-ETHYLHEXYL)PHTHALATE	10	U		10	U	
2,4,6-TRICHLOROPHENOL	10	U		10	U		DI-N-OCTYLPHTHALATE	10	U		10	U	
2,4,5-TRICHLOROPHENOL	26	U		25	U		BENZO(B)FLUORANTHENE	10	U		10	U	
2-CHLORONAPHTHALENE	10	U		10	U		BENZO(K)FLUORANTHENE	10	U		10	U	
2-NITROANILINE	26	U		25	U		BENZO(A)PYRENE	10	U		10	U	
DIMETHYLPHTHALATE	10	U		10	U		INDENO(1,2,3-CD)PYRENE	10	U		10	U	
ACENAPHTHYLENE	10	U		10	U		DIBENZ(A,H)ANTHRACENE	10	U		10	U	
2,6-DINITROTOLUENE	10	U		10	U		BENZO(G,H,I)PERYLENE	10	U		10	U	
3-NITROANILINE	26	U		25	U								
ACENAPHTHENE	10	U		10	U								

TABLE B-6
NAVAL FUEL DEPOT POINT MOLATE
AREA 10: SOUTH SHORELINE
ANALYTICAL RESULTS OF SVOCS IN GROUNDWATER SAMPLES

Project : POINT MOLATE
Lab. : ETCMP
FILTER : area ='AREA 10' AND SMPTYPE='ORIG' AND TIC='N'
Date : 06/20/94 16:54:24

PRC Sample ID	MW10-10(21.0)			MW10-11(21)				MW10-10(21.0)			MW10-11(21)		
Lab Samp Id	9403113-01C			9403139-04C				9403113-01C			9403139-04C		
Matrix	WATER			WATER				WATER			WATER		
Units	UG/L			UG/L				UG/L			UG/L		
Date Received	03/24/94			03/29/94				03/24/94			03/29/94		
Date Extracted	03/28/94			03/31/94				03/28/94			03/31/94		
Date Analyzed	04/19/94			04/23/94				04/19/94			04/23/94		
Compound	Result	Val	Com	Result	Val	Com	Compound	Result	Val	Com	Result	Val	Com
PHENOL	10	U		10	U		2,4-DINITROPHENOL	26	U		25	U	
BIS(2-CHLOROETHYL)ETHER	10	U		10	U		4-NITROPHENOL	26	U		25	U	
2-CHLOROPHENOL	10	U		10	U		DIBENZOFURAN	10	U		10	U	
1,3-DICHLOROBENZENE	10	U		10	U		2,4-DINITROTOLUENE	10	U		10	U	
1,4-DICHLOROBENZENE	10	U		10	U		DIETHYLPHTHALATE	10	U		10	U	
1,2-DICHLOROBENZENE	10	U		10	U		4-CHLOROPHENYL-PHENYLETHER	10	U		10	U	
2-METHYLPHENOL	10	U		10	U		FLUORENE	10	U		10	U	
2,2'-OXYBIS(1-CHLOROPROPANE)	10	U		10	U		4-NITROANILINE	26	U		25	U	
4-METHYLPHENOL	10	U		10	U		4,6-DINITRO-2-METHYLPHENOL	26	U		25	U	
N-NITROSO-DI-N-PROPYLAMINE	10	U		10	U		N-NITROSODIPHENYLAMINE (1)	10	UJ-K		10	UJ-K	
HEXACHLOROETHANE	10	U		10	U		4-BROMOPHENYL-PHENYLETHER	10	U		10	U	
NITROBENZENE	10	U		10	U		HEXACHLOROBENZENE	10	U		10	U	
ISOPHORONE	10	U		10	U		PENTACHLOROPHENOL	26	U		25	U	
2-NITROPHENOL	10	U		10	U		PHENANTHRENE	10	U		10	U	
2,4-DIMETHYLPHENOL	10	U		10	U		ANTHRACENE	10	U		10	U	
BIS(2-CHLOROETHOXY)METHANE	10	U		10	U		CARBAZOLE	10	U		10	UJ-K	
2,4-DICHLOROPHENOL	10	U		10	U		DI-N-BUTYLPHTHALATE	10	U		10	UJ-K	
1,2,4-TRICHLOROBENZENE	10	U		10	U		FLUORANTHENE	10	U		10	U	
NAPHTHALENE	10	U		10	U		PYRENE	10	U		10	UJ-K	
4-CHLOROANILINE	10	UJ-K		10	UJ-K		BUTYLBENZYLPHTHALATE	10	U		10	UJ-K	
HEXACHLOROBUTADIENE	10	U		10	U		3,3'-DICHLOROBENZIDINE	10	UJ-K		10	U	
4-CHLORO-3-METHYLPHENOL	10	U		10	U		BENZO(A)ANTHRACENE	10	U		10	U	
2-METHYLNAPHTHALENE	10	U		10	U		CHRYSENE	10	U		10	U	
HEXACHLOROCYCLOPENTADIENE	10	U		10	U		BIS(2-ETHYLHEXYL)PHTHALATE	10	U		10	UJ-K	
2,4,6-TRICHLOROPHENOL	10	U		10	U		DI-N-OCTYLPHTHALATE	10	U		10	U	
2,4,5-TRICHLOROPHENOL	26	U		25	U		BENZO(B)FLUORANTHENE	10	U		10	U	
2-CHLORONAPHTHALENE	10	U		10	U		BENZO(K)FLUORANTHENE	10	U		10	U	
2-NITROANILINE	26	U		25	U		BENZO(A)PYRENE	10	U		10	U	
DIMETHYLPHTHALATE	10	U		10	U		INDENO(1,2,3-CD)PYRENE	10	U		10	U	
ACENAPHTHYLENE	10	U		10	U		DIBENZ(A,H)ANTHRACENE	10	U		10	U	
2,6-DINITROTOLUENE	10	U		10	U		BENZO(G,H,I)PERYLENE	10	U		10	U	
3-NITROANILINE	26	U		25	U								
ACENAPHTHENE	10	U		10	U								

TABLE B-6
NAVAL FUEL DEPOT POINT MOLATE
AREA 10: SOUTH SHORELINE
ANALYTICAL RESULTS OF SVOCS IN GROUNDWATER SAMPLES

Project : POINT MOLATE
Lab. : ETCMP
FILTER : area ='AREA 10' AND SMPTYPE='ORIG' AND TIC='N'
Date : 06/20/94 16:54:24

PRC Sample ID	MW10-12(18.0)			MW10-14(19.0)				MW10-12(18.0)			MW10-14(19.0)		
Lab Samp Id	9403102-02C			9403102-01C				9403102-02C			9403102-01C		
Matrix	WATER			WATER				WATER			WATER		
Units	UG/L			UG/L				UG/L			UG/L		
Date Received	03/22/94			03/22/94				03/22/94			03/22/94		
Date Extracted	03/24/94			03/24/94				03/24/94			03/24/94		
Date Analyzed	04/13/94			04/13/94				04/13/94			04/13/94		
Compound	Result	Val	Com	Result	Val	Com	Compound	Result	Val	Com	Result	Val	Com
PHENOL	10	U		11	U		2,4-DINITROPHENOL	26	U		26	U	
BIS(2-CHLOROETHYL)ETHER	10	U		11	U		4-NITROPHENOL	26	U		26	U	
2-CHLOROPHENOL	10	U		11	U		DIBENZOFURAN	10	U		11	U	
1,3-DICHLOROBENZENE	10	U		11	U		2,4-DINITROTOLUENE	10	U		11	U	
1,4-DICHLOROBENZENE	10	U		11	U		DIETHYLPHTHALATE	10	U		11	U	
1,2-DICHLOROBENZENE	10	U		11	U		4-CHLOROPHENYL-PHENYLETHER	10	U		11	U	
2-METHYLPHENOL	10	U		11	U		FLUORENE	10	U		11	U	
2,2'-OXYBIS(1-CHLOROPROPANE)	10	U		11	U		4-NITROANILINE	26	U		26	U	
4-METHYLPHENOL	10	U		11	U		4,6-DINITRO-2-METHYLPHENOL	26	U		26	U	
N-NITROSO-DI-N-PROPYLAMINE	10	U		11	U		N-NITROSODIPHENYLAMINE (1)	10	U		11	U	
HEXACHLOROETHANE	10	U		11	U		4-BROMOPHENYL-PHENYLETHER	10	U		11	U	
NITROBENZENE	10	U		11	U		HEXACHLOROBENZENE	10	U		11	U	
ISOPHORONE	10	U		11	U		PENTACHLOROPHENOL	26	U		26	U	
2-NITROPHENOL	10	U		11	U		PHENANTHRENE	10	U		11	U	
2,4-DIMETHYLPHENOL	10	U		11	U		ANTHRACENE	10	U		11	U	
BIS(2-CHLOROETHOXY)METHANE	10	U		11	U		CARBAZOLE	10	U		11	U	
2,4-DICHLOROPHENOL	10	U		11	U		DI-N-BUTYLPHTHALATE	10	U		11	U	
1,2,4-TRICHLOROBENZENE	10	U		11	U		FLUORANTHENE	10	U		11	U	
NAPHTHALENE	10	U		11	U		PYRENE	10	U		11	U	
4-CHLOROANILINE	10	UJ-K		11	UJ-K		BUTYLBENZYLPHTHALATE	10	U		11	U	
HEXACHLOROBUTADIENE	10	U		11	U		3,3'-DICHLOROBENZIDINE	10	UJ-K		11	UJ-K	
4-CHLORO-3-METHYLPHENOL	10	U		11	U		BENZO(A)ANTHRACENE	10	U		11	U	
2-METHYLNAPHTHALENE	10	U		11	U		CHRYSENE	10	U		11	U	
HEXACHLOROCYCLOPENTADIENE	10	U		11	U		BIS(2-ETHYLHEXYL)PHTHALATE	10	U-B		11	U	
2,4,6-TRICHLOROPHENOL	10	U		11	U		DI-N-OCTYLPHTHALATE	10	U		11	U	
2,4,5-TRICHLOROPHENOL	26	U		26	U		BENZO(B)FLUORANTHENE	10	U		11	U	
2-CHLORONAPHTHALENE	10	U		11	U		BENZO(K)FLUORANTHENE	10	U		11	U	
2-NITROANILINE	26	U		26	U		BENZO(A)PYRENE	10	U		11	U	
DIMETHYLPHTHALATE	10	U		11	U		INDENO(1,2,3-CD)PYRENE	10	U		11	U	
ACENAPHTHYLENE	10	U		11	U		DIBENZ(A,H)ANTHRACENE	10	U		11	U	
2,6-DINITROTOLUENE	10	U		11	U		BENZO(G,H,I)PERYLENE	10	U		11	U	
3-NITROANILINE	26	U		26	U								
ACENAPHTHENE	10	U		11	U								

TABLE B-7
NAVAL FUEL DEPOT POINT MOLATE
AREA 10: SOUTH SHORELINE
ANALYTICAL RESULTS OF PESTICIDES/PCBS IN GROUNDWATER SAMPLES

Project : POINT MOLATE
Lab. : ETCMP
FILTER : area ='AREA 10' AND SMPTYPE='ORIG' AND TIC='N'
Date : 06/20/94 17:08:31

PRC Sample ID	MW10-11(21)			MW10-12(18.0)			MW10-14(19.0)								
Lab Samp Id	9403139-04C			9403102-02C			9403102-01C								
Matrix	WATER			WATER			WATER								
Units	UG/L			UG/L			UG/L								
Date Received	03/29/94			03/22/94			03/22/94								
Date Extracted	03/31/94			03/24/94			03/24/94								
Date Analyzed	04/22/94			04/02/94			04/02/94								
Compound	Result	Val	Com	Result	Val	Com	Result	Val	Com	Result	Val	Com	Result	Val	Com
ALPHA-BHC	0.050	UJ-S		0.052	UJ-S		0.052	UJ-S							
BETA-BHC	0.050	UJ-S		0.052	UJ-S		0.052	UJ-S							
DELTA-BHC	0.050	UJ-S		0.052	UJ-S		0.052	UJ-S							
GAMMA-BHC (LINDANE)	0.050	UJ-S		0.052	UJ-S		0.052	UJ-S							
HEPTACHLOR	0.050	UJ-S		0.052	UJ-S		0.052	UJ-S							
ALDRIN	0.050	UJ-S		0.052	UJ-S		0.052	UJ-S							
HEPTACHLOR EPOXIDE	0.050	UJ-S		0.052	UJ-S		0.052	UJ-S							
ENDOSULFAN I	0.050	UJ-S		0.052	UJ-S		0.052	UJ-S							
DIELDRIN	0.10	UJ-S		0.10	UJ-S		0.10	UJ-S							
4,4'-DDE	0.10	UJ-S		0.10	UJ-S		0.10	UJ-S							
ENDRIN	0.10	UJ-S		0.10	UJ-S		0.10	UJ-S							
ENDOSULFAN II	0.10	UJ-S		0.10	UJ-S		0.10	UJ-S							
4,4'-DDD	0.10	UJ-S		0.10	UJ-S		0.10	UJ-S							
ENDOSULFAN SULFATE	0.10	UJ-S		0.10	UJ-S		0.10	UJ-S							
4,4'-DDT	0.10	UJ-S		0.10	UJ-S		0.10	UJ-S							
METHOXYCHLOR	0.50	UJ-S		0.52	UJ-S		0.52	UJ-S							
ENDRIN KETONE	0.10	UJ-S		0.10	UJ-S		0.10	UJ-S							
ENDRIN ALDEHYDE	0.10	UJ-S		0.10	UJ-S		0.10	UJ-S							
ALPHA-CHLORDANE	0.050	UJ-S		0.052	UJ-S		0.052	UJ-S							
GAMMA-CHLORDANE	0.050	UJ-S		0.052	UJ-S		0.052	UJ-S							
TOXAPHENE	5.0	UJ-S		5.2	UJ-S		5.2	UJ-S							
AROCLOR-1016	1.0	UJ-S		1.0	UJ-S		1.0	UJ-S							
AROCLOR-1221	2.0	UJ-S		2.1	UJ-S		2.1	UJ-S							
AROCLOR-1232	1.0	UJ-S		1.0	UJ-S		1.0	UJ-S							
AROCLOR-1242	1.0	UJ-S		1.0	UJ-S		1.0	UJ-S							
AROCLOR-1248	1.0	UJ-S		1.0	UJ-S		1.0	UJ-S							
AROCLOR-1254	1.0	UJ-S		1.0	UJ-S		1.0	UJ-S							
AROCLOR-1260	1.0	UJ-S		1.0	UJ-S		1.0	UJ-S							

TABLE B-8
NAVAL FUEL DEPOT POINT MOLATE
AREA 11: NORTH SHORELINE
ANALYTICAL RESULTS OF METALS IN GROUNDWATER SAMPLES

Project : POINT MOLATE
Lab. : ETCMP
FILTER : area ='AREA 11' AND SMPTYPE = 'ORIG'
Date : 06/20/94 18:16:05

PRC Sample ID	MW11-02(26.0)			MW11-02(26.0)			MW11-05(22.0)			MW11-05(22.0)		
Lab Samp Id	940310901E			940310901D			940310206E			940310206D		
Matrix	WATER			WATER			WATER			WATER		
Units	UG/L			UG/L			UG/L			UG/L		
Date Received	03/23/94			03/23/94			03/22/94			03/22/94		
Date Extracted	04/14/94			04/14/94			04/14/94			04/14/94		
Date Analyzed	04/18/94			04/18/94			04/18/94			04/18/94		
Analysis Type	DISSOLVED			TOTAL			DISSOLVED			TOTAL		
Analyte	Result	Val	Com	Result	Val	Com	Result	Val	Com	Result	Val	Com
ALUMINUM	35.1	U-B		4360	J-N		36.0	U-B		1660	J-N	
ANTIMONY	31.0	UJ-Z		31.0	UJ-Z		31.0	UJ-Z		31.0	UJ-Z	
ARSENIC	2.0	UW		2.0	U		3.8	U-B		2.3	U-B	
BARIUM	62.9	B		118	B		36.8	B		57.2	B	
BERYLLIUM	1.0	U		1.0	U		1.0	U		1.0	U	
CADMIUM	4.0	U		4.0	U		4.0	U		4.0	U	
CALCIUM	11500			10300			6520			6610		
CHROMIUM	3.0	U		11.2			3.0	U		9.5	B	
COBALT	2.0	U		3.8	B		4.4	B		3.9	B	
COPPER	2.0	U		2.0	U		2.0	U		2.0	U	
IRON	14.1	B		3510			386			4320		
LEAD	1.5	B		2.0	B		1.0	U		1.2	BW	
MAGNESIUM	18000			18300			12200			13000		
MANGANESE	106			216			383			408		
MERCURY	0.14	U-B		0.17	U-B		0.14	U-B		0.14	U-B	
NICKEL	9.2	B		12.6	B		9.9	B		19.8	B	
POTASSIUM	2170	B		2270	U-B		2520	U-B		2920	U-B	
SELENIUM	2.0	US		2.0	UJ-N		2.0	US		2.0	UJ-N	
SILVER	2.0	UJ-Z		2.0	R		2.0	UJ-Z		2.0	R	
SODIUM	192000			186000			89500			92500		
THALLIUM	2.0	UW		20.0	UJ-N		2.0	UW		20.0	UJ-N	
VANADIUM	2.0	UJ-Z		5.7	J-Z		2.0	UJ-Z		2.1	J-Z	
ZINC	13.0	B		9.9	U-B		2.6	B		8.6	U-B	

U - Undetected at the concentration reported.
B - Reported value is greater than the Instrument Detection Limit (IDL), but less than the Contract Required Detection Limit (CRDL).
W - Post digestion spike for Furnace Atomic Absorption (AA) analysis is out of control limits.
E - Reported value is estimated because of the presence of interference.
N - Spiked sample recovery not within control limits.
S - Determined by Method of Standard Additions (MSA).
* - Duplicate analysis precision is not within control limits.
+ - Correlation coefficient is less than 0.995 for the MSA.
M - Duplicate injection precision was not met for AA analysis.

Comments:
D - Laboratory Duplicate
EB - Equipment Blank
FB - Field Blank
TB - Trip Blank
MS - Matrix Spike
MSD - Matrix Spike Duplicate

TABLE B-8
NAVAL FUEL DEPOT POINT MOLATE
AREA 11: NORTH SHORELINE
ANALYTICAL RESULTS OF METALS IN GROUNDWATER SAMPLES

Project : POINT MOLATE
Lab. : ETCMP
FILTER : area ='AREA 11' AND SMPTYPE = 'ORIG'
Date : 06/20/94 18:16:05

PRC Sample ID	MW11-08(22.0)			MW11-08(22.0)			MW11-40(17)			MW11-40(17)		
Lab Samp Id	940310801E			940310801D			940401004E			940401004D		
Matrix	WATER			WATER			WATER			WATER		
Units	UG/L			UG/L			UG/L			UG/L		
Date Received	03/23/94			03/23/94			04/01/94			04/01/94		
Date Extracted	04/14/94			04/14/94			04/25/94			04/25/94		
Date Analyzed	04/18/94			04/18/94			04/27/94			04/27/94		
Analysis Type	DISSOLVED			TOTAL			DISSOLVED			TOTAL		
Analyte	Result	Val	Com	Result	Val	Com	Result	Val	Com	Result	Val	Com
ALUMINUM	34.7	U-B		1770	J-N		14.0	U		4760		
ANTIMONY	31.0	UJ-Z		31.0	UJ-Z		31.0	U		31.0	UJ-N	
ARSENIC	2.0	U		2.0	U		2.0	U		4.0	B	
BARIUM	50.9	B		64.8	B		33.9	B		79.7	B	
BERYLLIUM	1.0	U		1.0	U		1.0	U		1.0	U	
CADMIUM	4.0	U		4.0	U		4.0	U		4.0	U	
CALCIUM	19800			18100			11900			13500		
CHROMIUM	3.0	U		5.1	B		3.0	U		3.0	U	
COBALT	2.0	U		2.0	U		2.0	U		2.0	U	
COPPER	2.0	U		40.4			2.0	U		25	U-B	
IRON	1320			2840			1660			7580		
LEAD	1.0	UW		1.9	B		1.0	U		9.6	S	
MAGNESIUM	20400			20400			4810	B		6200		
MANGANESE	501			473			205			249		
MERCURY	0.16	U-B		0.12	U-B		0.10	B		0.10	J-*	
NICKEL	7.9	B		9.6	B		7.0	U		7.2	B	
POTASSIUM	7810			8660			5000	U-B		5000	U-B	
SELENIUM	2.0	U		2.0	UJ-N		2.0	R-NW		20.0	R-NW	
SILVER	2.0	UJ-Z		2.0	R		2.0	U		2.0	U	
SODIUM	119000			127000			12000			12100		
THALLIUM	2.0	UW		20.0	UJ-N		2.0	UJ-NW		2.0	UJ-NW	
VANADIUM	2.0	UJ-Z		3.2	J-Z		2.0	U		50	U-Z	
ZINC	1.4	B		29.7			6.6	B		39.3		

U - Undetected at the concentration reported.
B - Reported value is greater than the Instrument Detection Limit (IDL), but less than the Contract Required Detection Limit (CRDL).
W - Post digestion spike for Furnace Atomic Absorption (AA) analysis is out of control limits.
E - Reported value is estimated because of the presence of interference.
N - Spiked sample recovery not within control limits.
S - Determined by Method of Standard Additions (MSA).
* - Duplicate analysis precision is not within control limits.
+ - Correlation coefficient is less than 0.995 for the MSA.
M - Duplicate injection precision was not met for AA analysis.

Comments:
D - Laboratory Duplicate
EB - Equipment Blank
FB - Field Blank
TB - Trip Blank
MS - Matrix Spike
MSD - Matrix Spike Duplicate

TABLE B-8
NAVAL FUEL DEPOT POINT MOLATE
AREA 11: NORTH SHORELINE
ANALYTICAL RESULTS OF METALS IN GROUNDWATER SAMPLES

Project : POINT MOLATE
Lab. : ETCMP
FILTER : area ='AREA 11' AND SMPTYPE = 'ORIG'
Date : 06/20/94 18:16:05

PRC Sample ID	MW11-92(19)			MW11-92(19)			MW11-95(19)			MW11-95(19)		
Lab Samp Id	940314501E			940314501D			940314601E			940314601D		
Matrix	WATER			WATER			WATER			WATER		
Units	UG/L			UG/L			UG/L			UG/L		
Date Received	03/30/94			03/30/94			03/30/94			03/30/94		
Date Extracted	04/25/94			04/25/94			04/25/94			04/25/94		
Date Analyzed	04/27/94			04/27/94			04/27/94			04/27/94		
Analysis Type	DISSOLVED			TOTAL			DISSOLVED			TOTAL		
Analyte	Result	Val	Com	Result	Val	Com	Result	Val	Com	Result	Val	Com
ALUMINUM	14.0	U		355			14.0	U		338		
ANTIMONY	31.0	U		31.0	UJ-N		31.0	U		31.0	UJ-N	
ARSENIC	2.5	B		2.4	J-W		2.0	B		4.2	BS	
BARIUM	201			258			202			246		
BERYLLIUM	1.0	U		1.0	U		1.0	U		1.0	U	
CADMIUM	4.0	U		4.0	U		4.0	U		4.0	U	
CALCIUM	52200			56900			53000			54200		
CHROMIUM	3.0	U		3.0	U		3.0	U		3.0	U	
COBALT	2.0	U		2.0	U		2.0	U		2.0	U	
COPPER	2.0	U		2.0	U		2.0	U		2.0	U	
IRON	1450			5980			1410			5780		
LEAD	1.0	U		1.6	J-W		1.0	U		2.0	UJ-W	
MAGNESIUM	29600			32000			29800			30600		
MANGANESE	2400			2620			2420			2500		
MERCURY	0.10	U		0.14	J-*		0.10	B		0.12	J-*	
NICKEL	7.0	U		7.0	U		7.0	U		7.0	U	
POTASSIUM	5180	UJ-B		5000	U-B		5260			5000	U-B	
SELENIUM	20.0	R-N		20.0	R-N		20.0	R-N		20.0	R-NW	
SILVER	2.0	U		2.0	U		2.0	U		2.0	U	
SODIUM	133000			146000			135000			140000		
THALLIUM	2.0	UJ-NW		2.0	UJ-NW		2.0	UJ-NW		2.0	UJ-NW	
VANADIUM	2.0	U		2.0	U		2.0	U		2.0	U	
ZINC	1.0	U		20	U-B		20	U-B		20	U-B	

U - Undetected at the concentration reported.
B - Reported value is greater than the Instrument Detection Limit (IDL), but less than the Contract Required Detection Limit (CRDL).
W - Post digestion spike for Furnace Atomic Absorption (AA) analysis is out of control limits.
E - Reported value is estimated because of the presence of interference.
N - Spiked sample recovery not within control limits.
S - Determined by Method of Standard Additions (MSA).
* - Duplicate analysis precision is not within control limits.
+ - Correlation coefficient is less than 0.995 for the MSA.
M - Duplicate injection precision was not met for AA analysis.

Comments:
D - Laboratory Duplicate
EB - Equipment Blank
FB - Field Blank
TB - Trip Blank
MS - Matrix Spike
MSD - Matrix Spike Duplicate

TABLE B-8
NAVAL FUEL DEPOT POINT MOLATE
AREA 11: NORTH SHORELINE
ANALYTICAL RESULTS OF METALS IN GROUNDWATER SAMPLES

Project : POINT MOLATE
Lab. : ETCMP
FILTER : area ='AREA 11' AND SMPTYPE = 'ORIG'
Date : 06/20/94 18:16:05

PRC Sample ID	MW11-13(26)			MW11-13(26)			MW11-93(22)			MW11-93(22)		
Lab Samp Id	940313802E			940313802D			940401001E			940401001D		
Matrix	WATER			WATER			WATER			WATER		
Units	UG/L			UG/L			UG/L			UG/L		
Date Received	03/29/94			03/29/94			04/01/94			04/01/94		
Date Extracted	04/25/94			04/25/94			04/25/94			04/25/94		
Date Analyzed	04/27/94			04/27/94			04/27/94			04/27/94		
Analysis Type	DISSOLVED			TOTAL			DISSOLVED			TOTAL		
Analyte	Result	Val	Com	Result	Val	Com	Result	Val	Com	Result	Val	Com
ALUMINUM	14.0	U		200	U-B		14.0	U		14.0	U	
ANTIMONY	31.0	U		31.0	UJ-N		31.0	U		31.0	UJ-N	
ARSENIC	2.0	U		2.7	B		3.8	B		3.3	J-W	
BARIUM	312			388			56.9	B		86.9	B	
BERYLLIUM	1.0	U		1.0	U		1.0	U		1.0	U	
CADMIUM	5.2	UJ-B		4.0	U		4.0	U		4.0	U	
CALCIUM	118000			118000			57300			61100		
CHROMIUM	3.0	U		3.0	U		3.0	U		3.0	U	
COBALT	2.0	U		2.0	U		2.0	U		2.0	U	
COPPER	2.0	U		2.0	U		2.0	U		2.0	U	
IRON	2370			8940			9990			14200		
LEAD	1.3	J-W		4.3	J-MW		1.8	B		3.3	J-W	
MAGNESIUM	97100			96400			23500			25000		
MANGANESE	3190			3230			1790			1940		
MERCURY	0.10	UJ-H		0.44	J-H*		0.10	U		4.8	J-*	
NICKEL	7.3	B		7.0	U		7.0	U		8.6	B	
POTASSIUM	18600			18300			10200			9500		
SELENIUM	20.0	R-N		20.0	R-N		2.0	R-NW		20.0	R-NW	
SILVER	2.0	U		2.0	U		2.0	U		2.0	U	
SODIUM	486000			487000			175000			185000		
THALLIUM	20.0	UJ-NW		2.0	UJ-NW		2.0	UJ-NW		2.0	UJ-NW	
VANADIUM	2.0	U		2.0	U		2.0	U		2.0	U	
ZINC	1.0	U		20	U-B		20	U-B		20	U-B	

U - Undetected at the concentration reported.
B - Reported value is greater than the Instrument Detection Limit (IDL), but less than the Contract Required Detection Limit (CRDL).
W - Post digestion spike for Furnace Atomic Absorption (AA) analysis is out of control limits.
E - Reported value is estimated because of the presence of interference.
N - Spiked sample recovery not within control limits.
S - Determined by Method of Standard Additions (MSA).
* - Duplicate analysis precision is not within control limits.
+ - Correlation coefficient is less than 0.995 for the MSA.
M - Duplicate injection precision was not met for AA analysis.

Comments:
D - Laboratory Duplicate
EB - Equipment Blank
FB - Field Blank
TB - Trip Blank
MS - Matrix Spike
MSD - Matrix Spike Duplicate

TABLE B-8
NAVAL FUEL DEPOT POINT MOLATE
AREA 11: NORTH SHORELINE
ANALYTICAL RESULTS OF METALS IN GROUNDWATER SAMPLES

Project : POINT MOLATE
Lab. : ETCMP
FILTER : area ='AREA 11' AND SMPTYPE = 'ORIG'
Date : 06/20/94 18:16:05

PRC Sample ID	MW11-54(23)			MW11-54(23)			MW11-96(23)			MW11-96(23)		
Lab Samp Id	940313901E			940313901D			940313902E			940313902D		
Matrix	WATER			WATER			WATER			WATER		
Units	UG/L			UG/L			UG/L			UG/L		
Date Received	03/29/94			03/29/94			03/29/94			03/29/94		
Date Extracted	04/19/94			04/19/94			04/19/94			04/19/94		
Date Analyzed	04/21/94			04/21/94			04/21/94			04/21/94		
Analysis Type	DISSOLVED			TOTAL			DISSOLVED			TOTAL		
Analyte	Result	Val	Com	Result	Val	Com	Result	Val	Com	Result	Val	Com
ALUMINUM	30.8	U-B		571	J-*		43.1	U-B		509	J-*	
ANTIMONY	31.0	U		31.0	U		31.0	U		31.0	U	
ARSENIC	7.4	B		10.4	J-W		7.5	B		9.1	BW	
BARIUM	25.3	B		39.9	B		25.9	B		37.3	B	
BERYLLIUM	1.0	U		1.0	U		1.0	U		1.0	U	
CADMIUM	4.0	U		4.0	U		5.5	UJ-Z		4.0	U	
CALCIUM	53900			55600			54300			54000		
CHROMIUM	3.0	U		3.0	U		3.0	U		3.0	U	
COBALT	2.0	U		2.0	U		2.0	U		2.0	U	
COPPER	2.0	U		2.0	U		2.0	U		2.0	U	
IRON	2740			6730			3180			6520		
LEAD	1.0	UJ-W		1.0	U		1.0	UW		1.0	U	
MAGNESIUM	22100			22400			22200			21700		
MANGANESE	3150			3330			3210			3220		
MERCURY	0.12	U-B		0.10	U		0.13	U-B		0.10	U	
NICKEL	7.1	B		7.0	U		7.0	U		7.0	U	
POTASSIUM	7970			7030			7340			7000		
SELENIUM	2.0	U		2.0	U		2.0	U		2.0	BW	
SILVER	2.0	U		2.0	U		2.0	U		2.0	U	
SODIUM	144000			142000			144000			137000		
THALLIUM	2.0	UJ-W		2.0	UJ-NW		2.0	UW		2.0	UJ-N	
VANADIUM	2.0	U		2.0	U		2.0	U		2.0	U	
ZINC	6.3	U-B		3.9	U-B		1.8	U-B		4.8	U-B	

U - Undetected at the concentration reported.
B - Reported value is greater than the Instrument Detection Limit (IDL), but less than the Contract Required Detection Limit (CRDL).
W - Post digestion spike for Furnace Atomic Absorption (AA) analysis is out of control limits.
E - Reported value is estimated because of the presence of interference.
N - Spiked sample recovery not within control limits.
S - Determined by Method of Standard Additions (MSA).
* - Duplicate analysis precision is not within control limits.
+ - Correlation coefficient is less than 0.995 for the MSA.
M - Duplicate injection precision was not met for AA analysis.

Comments:
D - Laboratory Duplicate
EB - Equipment Blank
FB - Field Blank
TB - Trip Blank
MS - Matrix Spike
MSD - Matrix Spike Duplicate

TABLE B-8
NAVAL FUEL DEPOT POINT MOLATE
AREA 11: NORTH SHORELINE
ANALYTICAL RESULTS OF METALS IN GROUNDWATER SAMPLES

Project : POINT MOLATE
Lab. : ETCMP
FILTER : area ='AREA 11' AND SMPTYPE = 'ORIG'
Date : 06/20/94 18:16:05

PRC Sample ID	MW11-21(22)			MW11-21(22)			MW11-55(23.0)			MW11-55(23.0)		
Lab Samp Id	940314502E			940314502D			940310902E			940310902D		
Matrix	WATER			WATER			WATER			WATER		
Units	UG/L			UG/L			UG/L			UG/L		
Date Received	03/30/94			03/30/94			03/23/94			03/23/94		
Date Extracted	04/25/94			04/25/94			04/14/94			04/14/94		
Date Analyzed	04/27/94			04/27/94			04/18/94			04/18/94		
Analysis Type	DISSOLVED			TOTAL			DISSOLVED			TOTAL		
Analyte	Result	Val	Com	Result	Val	Com	Result	Val	Com	Result	Val	Com
ALUMINUM	14.0	U		3930			400			6370	J-N	
ANTIMONY	31.0	U		31.0	UJ-N		31.0	UJ-Z		31.0	UJ-Z	
ARSENIC	25.8			2.4	B		6.7	U-B		8.2	U-B	
BARIUM	62.8	B		120	B		26.9	B		58.4	B	
BERYLLIUM	1.0	U		1.0	U		1.0	U		1.0	U	
CADMIUM	4.0	U		4.0	U		4.0	U		4.0	U	
CALCIUM	66400			72700			20600			20800		
CHROMIUM	3.0	U		6.3	B		3.0	U		10.3		
COBALT	2.0	U		2.5	B		2.0	U		3.6	B	
COPPER	2.0	U		2.0	U		8.9	B		3.1	B	
IRON	9120			17800			525			8270		
LEAD	1.0	U		5.9	S		1.9	BW		10.7	S	
MAGNESIUM	22900			26000			26600			28600		
MANGANESE	3100			3410			467			583		
MERCURY	0.10	U		0.43	J-*		0.11	U-B		0.13	U-B	
NICKEL	7.0	U		16.0	B		9.0	B		18.8	B	
POTASSIUM	5000	U-B		5000	U-B		15300			16900		
SELENIUM	20.0	R-N		20.0	R-NW		2.7	BW		21.8	J-N	
SILVER	2.0	U		2.0	U		2.0	UJ-Z		2.0	R	
SODIUM	94400			102000			347000			355000		
THALLIUM	2.0	UJ-NW		2.0	UJ-NW		20.0	UW		20.0	UJ-N	
VANADIUM	50	U-Z		50	U-Z		2.0	UJ-Z		12.9	J-Z	
ZINC	20	U-B		20.3			40.6			27.0		

U - Undetected at the concentration reported.
B - Reported value is greater than the Instrument Detection Limit (IDL), but less than the Contract Required Detection Limit (CRDL).
W - Post digestion spike for Furnace Atomic Absorption (AA) analysis is out of control limits.
E - Reported value is estimated because of the presence of interference.
N - Spiked sample recovery not within control limits.
S - Determined by Method of Standard Additions (MSA).
* - Duplicate analysis precision is not within control limits.
+ - Correlation coefficient is less than 0.995 for the MSA.
M - Duplicate injection precision was not met for AA analysis.

Comments:
D - Laboratory Duplicate
EB - Equipment Blank
FB - Field Blank
TB - Trip Blank
MS - Matrix Spike
MSD - Matrix Spike Duplicate

TABLE B-8
NAVAL FUEL DEPOT POINT MOLATE
AREA 11: NORTH SHORELINE
ANALYTICAL RESULTS OF METALS IN GROUNDWATER SAMPLES

Project : POINT MOLATE
Lab. : ETCMP
FILTER : area ='AREA 11' AND SMPTYPE = 'ORIG'
Date : 06/20/94 18:16:05

PRC Sample ID	MW11-19(23.0)			MW11-19(23.0)			MW11-56(22)			MW11-56(22)		
Lab Samp Id	940310803E			940310803D			940401002E			940401002D		
Matrix	WATER			WATER			WATER			WATER		
Units	UG/L			UG/L			UG/L			UG/L		
Date Received	03/23/94			03/23/94			04/01/94			04/01/94		
Date Extracted	04/14/94			04/14/94			04/25/94			04/25/94		
Date Analyzed	04/18/94			04/18/94			04/27/94			04/27/94		
Analysis Type	DISSOLVED			TOTAL			DISSOLVED			TOTAL		
Analyte	Result	Val	Com	Result	Val	Com	Result	Val	Com	Result	Val	Com
ALUMINUM	25.6	U-B		1960	J-N		14.0	U		7900		
ANTIMONY	31.0	UJ-Z		31.0	U		31.0	U		31.0	UJ-N	
ARSENIC	2.0	UW		2.1	U-B		2.0	UJ-W		20.0	U	
BARIUM	101	B		112	B		53.4	B		146	B	
BERYLLIUM	1.0	U		1.0	U		1.0	U		1.0	U	
CADMIUM	4.0	U		4.0	U		4.0	U		4.0	U	
CALCIUM	39100			36600			113000			121000		
CHROMIUM	3.0	U		6.1	B		3.0	U		5.1	B	
COBALT	2.0	U		2.0	U		2.0	U		8.8	B	
COPPER	2.0	U		2.0	U		25	U-B		25	U-B	
IRON	1640			4220			80.7	B		10200		
LEAD	1.9	B		5.3			4.6	J-W		11.3	J-W	
MAGNESIUM	30100			28600			314000			334000		
MANGANESE	1240			1220			515			992		
MERCURY	0.13	U-B		0.14	U-B		0.10	U		3.0	J-*	
NICKEL	7.0	U		17.7	B		7.0	U		15.7	B	
POTASSIUM	13500			12900			122000			131000		
SELENIUM	2.7	B+		2.0	UJ-N		20.0	R-NW		28.8	J-N	
SILVER	2.0	UJ-Z		2.0	R		2.0	U		2.0	U	
SODIUM	395000			370000			3570000			3640000		
THALLIUM	20.0	UW		20.0	UJ-N		2.0	UJ-NW		20.0	UJ-NW	
VANADIUM	2.0	UJ-Z		2.6	J-Z		50	U-Z		17.1	J-Z	
ZINC	1.0	U		5.6	U-B		1.0	U		32.4		

U - Undetected at the concentration reported.
B - Reported value is greater than the Instrument Detection Limit (IDL), but less than the Contract Required Detection Limit (CRDL).
W - Post digestion spike for Furnace Atomic Absorption (AA) analysis is out of control limits.
E - Reported value is estimated because of the presence of interference.
N - Spiked sample recovery not within control limits.
S - Determined by Method of Standard Additions (MSA).
* - Duplicate analysis precision is not within control limits.
+ - Correlation coefficient is less than 0.995 for the MSA.
M - Duplicate injection precision was not met for AA analysis.

Comments:
D - Laboratory Duplicate
EB - Equipment Blank
FB - Field Blank
TB - Trip Blank
MS - Matrix Spike
MSD - Matrix Spike Duplicate

TABLE B-8
NAVAL FUEL DEPOT POINT MOLATE
AREA 11: NORTH SHORELINE
ANALYTICAL RESULTS OF METALS IN GROUNDWATER SAMPLES

Project : POINT MOLATE
Lab. : ETCMP
FILTER : area ='AREA 11' AND SMPTYPE = 'ORIG'
Date : 06/20/94 18:16:05

PRC Sample ID	MW11-57(23)			MW11-57(23)								
Lab Samp Id	940313805E			940313805D								
Matrix	WATER			WATER								
Units	UG/L			UG/L								
Date Received	03/29/94			03/29/94								
Date Extracted	04/25/94			04/25/94								
Date Analyzed	04/27/94			04/27/94								
Analysis Type	DISSOLVED			TOTAL								
Analyte	Result	Val	Com	Result	Val	Com	Result	Val	Com	Result	Val	Com
ALUMINUM	14.0	U		14900								
ANTIMONY	31.0	U		31.0	UJ-N							
ARSENIC	2.0	U		2.0	UJ-W							
BARIUM	207			326								
BERYLLIUM	1.0	U		1.0	U							
CADMIUM	4.0	U		4.0	U							
CALCIUM	83800			82600								
CHROMIUM	3.0	U		12.9								
COBALT	2.0	U		6.9	B							
COPPER	2.0	U		25	U-B							
IRON	1550			16000								
LEAD	1.0	UJ-W		23.5	S							
MAGNESIUM	79400			74000								
MANGANESE	3800			3780								
MERCURY	0.10	U		0.44	J-*							
NICKEL	7.0	B		14.8	B							
POTASSIUM	15400			17900								
SELENIUM	20.0	R-N		20.0	R-NW							
SILVER	2.0	U		2.0	U							
SODIUM	725000			650000								
THALLIUM	20.0	UJ-NW		20.0	UJ-NW							
VANADIUM	50	U-Z		26.9	J-Z							
ZINC	20	U-B		42.9								

U - Undetected at the concentration reported.
B - Reported value is greater than the Instrument Detection Limit (IDL), but less than the Contract Required Detection Limit (CRDL).
W - Post digestion spike for Furnace Atomic Absorption (AA) analysis is out of control limits.
E - Reported value is estimated because of the presence of interference.
N - Spiked sample recovery not within control limits.
S - Determined by Method of Standard Additions (MSA).
* - Duplicate analysis precision is not within control limits.
+ - Correlation coefficient is less than 0.995 for the MSA.
M - Duplicate injection precision was not met for AA analysis.

Comments:
D - Laboratory Duplicate
EB - Equipment Blank
FB - Field Blank
TB - Trip Blank
MS - Matrix Spike
MSD - Matrix Spike Duplicate

TABLE B-9
NAVAL FUEL DEPOT POINT MOLATE
AREA 10: SOUTH SHORELINE
ANALYTICAL RESULTS OF METALS IN GROUNDWATER SAMPLES

Project : POINT MOLATE
Lab. : ETCMP
FILTER : area ='AREA 10' AND SMPTYPE = 'ORIG'
Date : 06/21/94 08:27:47

PRC Sample ID	MW10-04 (21.0)			MW10-04 (21.0)			MW10-97(21.0)			MW10-97(21.0)		
Lab Samp Id	940312701E			940312701D						940312801D		
Matrix	WATER			WATER						WATER		
Units	UG/L			UG/L						UG/L		
Date Received	03/28/94			03/28/94						03/28/94		
Date Extracted	04/14/94			04/14/94						04/14/94		
Date Analyzed	04/18/94			04/18/94						04/18/94		
Analysis Type	DISSOLVED			TOTAL			DISSOLVED			TOTAL		
Analyte	Result	Val	Com	Result	Val	Com	Result	Val	Com	Result	Val	Com
ALUMINUM	44.9	U-B		39100	J-N		NOT ANALYZED			42500	J-N	
ANTIMONY	31.0	UJ-Z		31.0	UJ-Z		NOT ANALYZED			31.0	UJ-Z	
ARSENIC	4.5	B		5.0	U-B		NOT ANALYZED			5.1	U-B	
BARIUM	90.9	B		538			NOT ANALYZED			565		
BERYLLIUM	1.0	U		1.5	B		NOT ANALYZED			1.8	B	
CADMIUM	4.0	U		4.0	U		NOT ANALYZED			4.0	U	
CALCIUM	35000			44100			NOT ANALYZED			47000		
CHROMIUM	3.0	U		74.8			NOT ANALYZED			74.1		
COBALT	3.9	B		35.4	B		NOT ANALYZED			34.9	B	
COPPER	2.0	U		47.5			NOT ANALYZED			45.6		
IRON	25.0	B		57200			NOT ANALYZED			57700		
LEAD	2.0	B		38.3	S		NOT ANALYZED			34.0	W	
MAGNESIUM	69400			82200			NOT ANALYZED			87000		
MANGANESE	1430			2280			NOT ANALYZED			2350		
MERCURY	0.15	U-B		0.15	U-B		NOT ANALYZED			0.14	U-B	
NICKEL	12.0	B		88.7			NOT ANALYZED			87.4		
POTASSIUM	36600			43900			NOT ANALYZED			46500		
SELENIUM	20.0	UW		20.0	UJ-N		NOT ANALYZED			20.0	UJ-N	
SILVER	2.0	UJ-Z		2.0	R		NOT ANALYZED			2.0	R	
SODIUM	1200000			1240000			NOT ANALYZED			1320000		
THALLIUM	20.0	UW		20.0	UJ-N		NOT ANALYZED			20.0	UJ-N	
VANADIUM	5.7	UJ-Z		89.1			NOT ANALYZED			94.1		
ZINC	1.0	U		178			NOT ANALYZED			177		

U - Undetected at the concentration reported.
B - Reported value is greater than the Instrument Detection Limit (IDL), but less than the Contract Required Detection Limit (CRDL).
W - Post digestion spike for Furnace Atomic Absorption (AA) analysis is out of control limits.
E - Reported value is estimated because of the presence of interference.
N - Spiked sample recovery not within control limits.
S - Determined by Method of Standard Additions (MSA).
* - Duplicate analysis precision is not within control limits.
+ - Correlation coefficient is less than 0.995 for the MSA.
M - Duplicate injection precision was not met for AA analysis.

Comments:
D - Laboratory Duplicate
EB - Equipment Blank
FB - Field Blank
TB - Trip Blank
MS - Matrix Spike
MSD - Matrix Spike Duplicate

TABLE B-9
NAVAL FUEL DEPOT POINT MOLATE
AREA 10: SOUTH SHORELINE
ANALYTICAL RESULTS OF METALS IN GROUNDWATER SAMPLES

Project : POINT MOLATE
Lab. : ETCMP
FILTER : area ='AREA 10' AND SMPTYPE = 'ORIG'
Date : 06/21/94 08:27:47

PRC Sample ID	MW10-05(19.0)			MW10-05(19.0)			ERM10-01(23)			ERM10-01(23)		
Lab Samp Id	940312802E			940312802D			940313804E			940313804D		
Matrix	WATER			WATER			WATER			WATER		
Units	UG/L			UG/L			UG/L			UG/L		
Date Received	03/28/94			03/28/94			03/29/94			03/29/94		
Date Extracted	04/14/94			04/14/94			04/25/94			04/25/94		
Date Analyzed	04/18/94			04/18/94			04/27/94			04/27/94		
Analysis Type	DISSOLVED			TOTAL			DISSOLVED			TOTAL		
Analyte	Result	Val	Com	Result	Val	Com	Result	Val	Com	Result	Val	Com
ALUMINUM	45.1	U-B		4630	J-N		200	U-B		344		
ANTIMONY	31.0	UJ-Z		31.0	UJ-Z		31.0	U		31.0	UN	
ARSENIC	2.0	UW		3.6	U-B		3.3	B		5.4	B	
BARIUM	232			271			39.8	B		52.1	B	
BERYLLIUM	1.0	U		1.0	U		1.0	U		1.0	U	
CADMIUM	4.0	U		4.0	U		4.0	U		4.0	U	
CALCIUM	149000			156000			8990			8970		
CHROMIUM	3.0	U		7.9	B		3.0	U		3.0	U	
COBALT	3.5	B		4.9	B		2.0	U		2.0	U	
COPPER	4.5	B		5.5	B		2.0	U		2.0	U	
IRON	5.0	U		5960			2270			3820		
LEAD	1.0	UW		5.5	W		1.0	U		2.3	B	
MAGNESIUM	383000			397000			5330			5450		
MANGANESE	1280			1470			518			522		
MERCURY	0.10	U		0.15	U-B		0.10	U		0.10	J-*	
NICKEL	7.0	U		21.9	B		7.0	U		7.0	U	
POTASSIUM	110000			118000			5000	U-B		626	U	
SELENIUM	20.0	U		25.7	J-N		2.0	R-NW		2.0	R-NW	
SILVER	2.0	UJ-Z		2.0	R		2.0	U		2.0	U	
SODIUM	3700000			3820000			20400			20500		
THALLIUM	20.0	UW		20.0	UJ-N		2.0	UJ-NW		2.0	UJ-NW	
VANADIUM	2.0	UJ-Z		11.0	J-Z		2.0	U		50	U-B	
ZINC	1.0	U		18.9	U-B		20	U-B		20	U-B	

U - Undetected at the concentration reported.
B - Reported value is greater than the Instrument Detection Limit (IDL), but less than the Contract Required Detection Limit (CRDL).
W - Post digestion spike for Furnace Atomic Absorption (AA) analysis is out of control limits.
E - Reported value is estimated because of the presence of interference.
N - Spiked sample recovery not within control limits.
S - Determined by Method of Standard Additions (MSA).
* - Duplicate analysis precision is not within control limits.
+ - Correlation coefficient is less than 0.995 for the MSA.
M - Duplicate injection precision was not met for AA analysis.

Comments:
D - Laboratory Duplicate
EB - Equipment Blank
FB - Field Blank
TB - Trip Blank
MS - Matrix Spike
MSD - Matrix Spike Duplicate

TABLE B-9
NAVAL FUEL DEPOT POINT MOLATE
AREA 10: SOUTH SHORELINE
ANALYTICAL RESULTS OF METALS IN GROUNDWATER SAMPLES

Project : POINT MOLATE
Lab. : ETCMP
FILTER : area ='AREA 10' AND SMPTYPE = 'ORIG'
Date : 06/21/94 08:27:47

PRC Sample ID	ERM10-02(19)			ERM10-02(19)			MW10-08 (24.0)			MW10-08 (24.0)		
Lab Samp Id	940313803E			940313803D			940312702E			940312702D		
Matrix	WATER			WATER			WATER			WATER		
Units	UG/L			UG/L			UG/L			UG/L		
Date Received	03/29/94			03/29/94			03/28/94			03/28/94		
Date Extracted	04/25/94			04/25/94			04/14/94			04/14/94		
Date Analyzed	04/27/94			04/27/94			04/18/94			04/18/94		
Analysis Type	DISSOLVED			TOTAL			DISSOLVED			TOTAL		
Analyte	Result	Val	Com	Result	Val	Com	Result	Val	Com	Result	Val	Com
ALUMINUM	14.0	U		1640			34.6	U-B		1340	J-N	
ANTIMONY	31.0	U		31.0	UJ-N		31.0	UJ-Z		31.0	UJ-Z	
ARSENIC	2.3	J-W		2.0	U		2.4	U-B		2.1	U-B	
BARIUM	67.9	B		79.7	B		91.7	B		110	B	
BERYLLIUM	1.0	U		1.0	U		1.0	U		1.0	U	
CADMIUM	4.0	U		4.0	U		4.0	U		4.0	U	
CALCIUM	48200			47900			83400			83000		
CHROMIUM	3.0	U		3.0	U		3.0	U		3.0	U	
COBALT	2.0	U		2.0	U		2.0	U		2.0	B	
COPPER	2.0	U		25	U-B		2.0	U		2.0	U	
IRON	5.0	U		1520			5.0	U		1570		
LEAD	1.0	UJ-W		5.0			1.0	U		1.0	U	
MAGNESIUM	24000			24200			56800			58800		
MANGANESE	477			510			632			666		
MERCURY	0.10	U		0.43	J-*		0.14	U-B		0.10	U	
NICKEL	7.8	B		7.0	U		7.4	B		7.0	U	
POTASSIUM	5000	U-B		5000	U-B		4580	U-B		2790	U-B	
SELENIUM	20.0	R-N		20.0	R-NW		2.0	UW		2.2	J-N	
SILVER	2.0	U		2.0	U		2.0	UJ-Z		2.0	R	
SODIUM	150000			152000			77600			82800		
THALLIUM	2.0	UJ-NW		2.0	UJ-NW		2.0	UW		2.0	UJ-N	
VANADIUM	2.0	U		2.0	U		2.0	UJ-Z		2.0	J-Z	
ZINC	8.8	B		43.1			8.2	B		14.1	U-B	

U - Undetected at the concentration reported.
B - Reported value is greater than the Instrument Detection Limit (IDL), but less than the Contract Required Detection Limit (CRDL).
W - Post digestion spike for Furnace Atomic Absorption (AA) analysis is out of control limits.
E - Reported value is estimated because of the presence of interference.
N - Spiked sample recovery not within control limits.
S - Determined by Method of Standard Additions (MSA).
* - Duplicate analysis precision is not within control limits.
+ - Correlation coefficient is less than 0.995 for the MSA.
M - Duplicate injection precision was not met for AA analysis.

Comments:
D - Laboratory Duplicate
EB - Equipment Blank
FB - Field Blank
TB - Trip Blank
MS - Matrix Spike
MSD - Matrix Spike Duplicate

TABLE B-9
NAVAL FUEL DEPOT POINT MOLATE
AREA 10: SOUTH SHORELINE
ANALYTICAL RESULTS OF METALS IN GROUNDWATER SAMPLES

Project : POINT MOLATE
Lab. : ETCMP
FILTER : area ='AREA 10' AND SMPTYPE = 'ORIG'
Date : 06/21/94 08:27:47

PRC Sample ID	MW10-09 (19.0)			MW10-09 (19.0)			MW10-98(19.0)			MW10-98(19.0)		
Lab Samp Id	940312704E			940312704D			940312803E			940312803D		
Matrix	WATER			WATER			WATER			WATER		
Units	UG/L			UG/L			UG/L			UG/L		
Date Received	03/28/94			03/28/94			03/28/94			03/28/94		
Date Extracted	04/14/94			04/14/94			04/14/94			04/14/94		
Date Analyzed	04/18/94			04/18/94			04/18/94			04/18/94		
Analysis Type	DISSOLVED			TOTAL			DISSOLVED			TOTAL		
Analyte	Result	Val	Com	Result	Val	Com	Result	Val	Com	Result	Val	Com
ALUMINUM	21.1	U-B		1640	J-N		31.9	U-B		175	J-N	
ANTIMONY	31.0	UJ-Z		31.0	UJ-Z		31.0	UJ-Z		31.0	UJ-Z	
ARSENIC	3.4	U-B		3.7	U-B		2.6	U-B		2.9	U-B	
BARIUM	83.0	B		117	B		81.1	B		108	B	
BERYLLIUM	1.0	U		1.0	U		1.0	U		1.0	U	
CADMIUM	4.0	U		4.0	U		4.0	U		4.0	U	
CALCIUM	118000			120000			116000			122000		
CHROMIUM	3.0	U		3.0	U		3.0	U		3.0	U	
COBALT	2.0	U		2.7	B		2.0	U		2.0	U	
COPPER	2.0	U		3.0	B		2.3	B		2.0	U	
IRON	5.0	U		2120			5.0	U		244		
LEAD	1.0	U		1.0	U		1.0	U		1.0	U	
MAGNESIUM	30300			31800			30200			31400		
MANGANESE	421			636			395			615		
MERCURY	0.10	U		0.12	U-B		0.10	U		0.20	UJ-B	
NICKEL	7.0	U		10.6	B		7.0	U		7.0	U	
POTASSIUM	6120	UJ-B		5480	U-B		5100			4750	U-B	
SELENIUM	2.0	BS		2.4	J-N		2.0	U+		2.0	J-N	
SILVER	2.0	UJ-Z		2.0	R		2.0	UJ-Z		2.0	R	
SODIUM	57000			60300			57800			59600		
THALLIUM	2.0	UW		2.0	UJ-N		2.0	UW		2.0	UJ-N	
VANADIUM	2.0	UJ-Z		2.0	UJ-Z		2.0	UJ-Z		2.0	UJ-Z	
ZINC	1.0	U		11.0	U-B		1.2	B		2.3	U-B	

U - Undetected at the concentration reported.
B - Reported value is greater than the Instrument Detection Limit (IDL), but less than the Contract Required Detection Limit (CRDL).
W - Post digestion spike for Furnace Atomic Absorption (AA) analysis is out of control limits.
E - Reported value is estimated because of the presence of interference.
N - Spiked sample recovery not within control limits.
S - Determined by Method of Standard Additions (MSA).
* - Duplicate analysis precision is not within control limits.
+ - Correlation coefficient is less than 0.995 for the MSA.
M - Duplicate injection precision was not met for AA analysis.

Comments:
D - Laboratory Duplicate
EB - Equipment Blank
FB - Field Blank
TB - Trip Blank
MS - Matrix Spike
MSD - Matrix Spike Duplicate

TABLE B-9
NAVAL FUEL DEPOT POINT MOLATE
AREA 10: SOUTH SHORELINE
ANALYTICAL RESULTS OF METALS IN GROUNDWATER SAMPLES

Project : POINT MOLATE
Lab. : ETCMP
FILTER : area ='AREA 10' AND SMPTYPE = 'ORIG'
Date : 06/21/94 08:27:47

PRC Sample ID	MW10-10(21.0)			MW10-10(21.0)			MW10-11(21)			MW10-11(21)		
Lab Samp Id	940311301E			940311301D			940313904E			940313904D		
Matrix	WATER			WATER			WATER			WATER		
Units	UG/L			UG/L			UG/L			UG/L		
Date Received	03/24/94			03/24/94			03/29/94			03/29/94		
Date Extracted	04/14/94			04/14/94			04/19/94			04/19/94		
Date Analyzed	04/18/94			04/18/94			04/21/94			04/21/94		
Analysis Type	DISSOLVED			TOTAL			DISSOLVED			TOTAL		
Analyte	Result	Val	Com	Result	Val	Com	Result	Val	Com	Result	Val	Com
ALUMINUM	984			21200	J-N		49.5	U-B		28800	J-*	
ANTIMONY	31.0	UJ-Z		31.0	UJ-Z		31.0	U		31.0	U	
ARSENIC	2.6	U-B		3.3	U-B		2.0	UW		4.5	B	
BARIUM	113	B		227			35.0	B		195	B	
BERYLLIUM	1.0	U		1.0	U		1.0	U		1.0	U	
CADMIUM	4.0	U		4.0	U		4.0	U		4.0	U	
CALCIUM	137000			139000			45300			49100		
CHROMIUM	3.0	U		32.7			3.0	U		34.5	UJ-Z	
COBALT	2.0	U		3.0	B		2.0	U		7.6	U-Z	
COPPER	2.0	U		5.3	B		2.0	U		15.3	B	
IRON	1340			23500			8.4	U-B		27600		
LEAD	4.7	W		10.1			1.0	UW		7.4	UJ-Z	
MAGNESIUM	21900			25900			32500			38900		
MANGANESE	84.2			213			424			691		
MERCURY	0.19	U-B		0.12	U-B		0.10	U		0.10	U-B	
NICKEL	9.6	B		26.6	B		7.0	U		28.5	B	
POTASSIUM	3700	U-B		5780	U-B		1890	U-B		6650		
SELENIUM	2.0	U+		2.8	J-N		2.0	UW		20.0	UW	
SILVER	2.0	UJ-Z		2.0	R		2.0	U		2.0	U	
SODIUM	25500			23300			70700			72200		
THALLIUM	2.0	UW		2.0	UJ-N		2.0	UW		2.0	UJ-N	
VANADIUM	2.0	J-Z		39.8	B		2.0	U		54.7		
ZINC	15.0	B		41.4			2.1	U-B		68.4		

U - Undetected at the concentration reported.
B - Reported value is greater than the Instrument Detection Limit (IDL), but less than the Contract Required Detection Limit (CRDL).
W - Post digestion spike for Furnace Atomic Absorption (AA) analysis is out of control limits.
E - Reported value is estimated because of the presence of interference.
N - Spiked sample recovery not within control limits.
S - Determined by Method of Standard Additions (MSA).
* - Duplicate analysis precision is not within control limits.
+ - Correlation coefficient is less than 0.995 for the MSA.
M - Duplicate injection precision was not met for AA analysis.

Comments:
D - Laboratory Duplicate
EB - Equipment Blank
FB - Field Blank
TB - Trip Blank
MS - Matrix Spike
MSD - Matrix Spike Duplicate

TABLE B-9
NAVAL FUEL DEPOT POINT MOLATE
AREA 10: SOUTH SHORELINE
ANALYTICAL RESULTS OF METALS IN GROUNDWATER SAMPLES

Project : POINT MOLATE
Lab. : ETCMP
FILTER : area ='AREA 10' AND SMPTYPE = 'ORIG'
Date : 06/21/94 08:27:47

PRC Sample ID	MW10-12(18.0)			MW10-12(18.0)			MW10-14(19.0)			MW10-14(19.0)		
Lab Samp Id	940310202E			940310202D			940310201E			940310201D		
Matrix	WATER			WATER			WATER			WATER		
Units	UG/L			UG/L			UG/L			UG/L		
Date Received	03/22/94			03/22/94			03/22/94			03/22/94		
Date Extracted	04/14/94			04/14/94			04/14/94			04/14/94		
Date Analyzed	04/18/94			04/18/94			04/18/94			04/18/94		
Analysis Type	DISSOLVED			TOTAL			DISSOLVED			TOTAL		
Analyte	Result	Val	Com	Result	Val	Com	Result	Val	Com	Result	Val	Com
ALUMINUM	27.4	U-B		15300	J-N		49.0	U-B		6450	J-N	
ANTIMONY	31.0	UJ-Z		31.0	UJ-Z		31.0	UJ-Z		31.0	UJ-Z	
ARSENIC	9.4	U-B		5.3	U-B		2.0	UW		2.0	U	
BARIUM	49.3	B		158	B		20.8	B		66.1	B	
BERYLLIUM	1.0	U		1.0	U		1.0	U		1.0	U	
CADMIUM	4.0	U		4.0	U		4.0	U		4.0	U	
CALCIUM	47000			48100			7840			8460		
CHROMIUM	3.0	U		41.1			3.0	U		23.2		
COBALT	2.0	U		4.2	B		2.0	U		2.0	U	
COPPER	2.0	U		7.7	B		2.0	U		2.0	U	
IRON	2100			20900			37.3	B		6650		
LEAD	1.0	U		7.0			1.0	UW		2.1	BW	
MAGNESIUM	30600			33800			9080			10700		
MANGANESE	1400			1560			8.8	B		69.1		
MERCURY	0.14	U-B		0.11	U-B		0.11	U-B		0.10	U	
NICKEL	7.7	B		42.0			8.7	B		31.5	B	
POTASSIUM	1770	U-B		4340	U-B		1210	U-B		3170	U-B	
SELENIUM	2.9	B		2.0	J-N		2.2	B		2.0	UJ-N	
SILVER	2.0	UJ-Z		2.0	R		2.0	UJ-Z		45.8	J-N*	
SODIUM	49600			48800			24900			25300		
THALLIUM	2.0	UW		20.0	UJ-N		2.0	UW		2.0	UJ-N	
VANADIUM	2.0	UJ-Z		30.0	B		2.0	UJ-Z		11.3	J-Z	
ZINC	1.0	U		38.4			3.4	B		16.4	U-B	

U - Undetected at the concentration reported.
B - Reported value is greater than the Instrument Detection Limit (IDL), but less than the Contract Required Detection Limit (CRDL).
W - Post digestion spike for Furnace Atomic Absorption (AA) analysis is out of control limits.
E - Reported value is estimated because of the presence of interference.
N - Spiked sample recovery not within control limits.
S - Determined by Method of Standard Additions (MSA).
* - Duplicate analysis precision is not within control limits.
+ - Correlation coefficient is less than 0.995 for the MSA.
M - Duplicate injection precision was not met for AA analysis.

Comments:
D - Laboratory Duplicate
EB - Equipment Blank
FB - Field Blank
TB - Trip Blank
MS - Matrix Spike
MSD - Matrix Spike Duplicate

TABLE B-10
NAVAL FUEL DEPOT POINT MOLATE
ANALYTICAL RESULTS OF TPH IN GROUNDWATER SAMPLES
EQUIPMENT BLANKS

CONCENTRATION IN UG/L

PRC Sample #	EB00-01	EB00-02	EB11-01	
Lab Sample I.D. (Purgeable/Extractable)	9403102-04B	9403102-04B	9403113-02B	
Purgeable:				
Benzene	0.5 U	0.5 U	0.5 U	
Toluene	4	0.8	2	
Ethylbenzene	0.5 U	0.5 U	0.5 U	
Total Xylenes	0.5 U	0.5 U	0.5 U	
Gasoline	50 U	50 U	50 U	
Other Compounds	50 U	50 U	50 U	
Extractable:				
JP-4 (C7-C18)			50 U	
JP-5 (C8-C16)			50 U	
Diesel F-76 (C8-C26)			50 U	
Weathered Diesel (C8-C26)			50 U	
Bunker Fuel (C10-C26)			500 U	
Other Compounds			50 U	
Notes				
PRC Sample #				
Lab Sample I.D. (Purgeable/Extractable)				
Purgeable:				
Benzene				
Toluene				
Ethylbenzene				
Total Xylenes				
Gasoline				
Other Compounds				
Extractable:				
JP-4 (C7-C18)				
JP-5 (C8-C16)				
Diesel F-76 (C8-C26)				
Weathered Diesel (C8-C26)				
Bunker Fuel (C10-C26)				
Other Compounds				
Notes				

Data Qualifiers:
U - Undetected at the reported concentration.
B - The analyte is found in the associated blank, as well as in samples.
J - The reported concentration is estimated.
NA - The parameter is not analyzed.
X - Manually entered data
Y - Hydrocarbon mixtures not exhibiting a reasonable pattern match with calibration standard or not within 90% of the calibration standard range
Z - The sample did not resemble a typical fuel pattern

Duplicate Samples: ERM02-02(14.0) and MW02-99(14.0)

TABLE B-10
NAVAL FUEL DEPOT POINT MOLATE
ANALYTICAL RESULTS OF VOLATILES IN GROUNDWATER SAMPLES
TRIP BLANK

Project : POINT MOLATE
Lab. : ETCMP
FILTER : SUBSTR(CLIENTSID,1,2)='TB' AND TIC='N'
Date : 06/24/94 11:41:01

PRC Sample ID	TB11-01			TB11-02			TB10-01			TB10-02			TB11-03		
Lab Samp Id	9403102-07A			9403108-02A			9403113-03A			9403127-03A			9403138-01A		
Matrix	WATER			WATER			WATER			WATER			WATER		
Units	UG/L			UG/L			UG/L			UG/L			UG/L		
Date Received	03/22/94			03/23/94			03/24/94			03/28/94			03/29/94		
Date Analyzed	03/28/94			03/30/94			03/30/94			03/30/94			04/04/94		
Compound	Result	Val	Com	Result	Val	Com	Result	Val	Com	Result	Val	Com	Result	Val	Com
CHLOROMETHANE	2	U		2	U		2	U		2	U		2	U	
BROMOMETHANE	2	U		2	U		2	U		2	U		2	U	
VINYL CHLORIDE	2	U		2	U		2	U		2	U		2	U	
CHLOROETHANE	2	U		2	U		2	U		2	U		2	U	
METHYLENE CHLORIDE	0.6	J		0.9	J		0.3	J-S		2	U		2	U	
ACETONE	2	U		2	U		2	U		2	U		2		
CARBON DISULFIDE	2	U		2	U		2	U		2	U		2	U	
1,1-DICHLOROETHENE	2	U		2	U		2	U		2	U		2	U	
1,1-DICHLOROETHANE	2	U		2	U		2	U		2	U		2	U	
1,2-DICHLOROETHENE (TOTAL)	2	U		2	U		2	U		2	U		2	U	
CHLOROFORM	2	U		2	U		2	U		2	U		2	U	
1,2-DICHLOROETHANE	2	U		2	U		2	U		2	U		2	U	
2-BUTANONE	2	U		2	U		2	U		2	U		2	U	
1,1,1-TRICHLOROETHANE	2	U		2	U		2	U		2	U		2	U	
CARBON TETRACHLORIDE	2	U		2	U		2	U		2	U		2	U	
BROMODICHLOROMETHANE	2	U		2	U		2	U		2	U		2	U	
1,2-DICHLOROPROPANE	2	U		2	U		2	U		2	U		2	U	
CIS-1,3-DICHLOROPROPENE	2	U		2	U		2	U		2	U		2	U	
TRICHLOROETHENE	2	U		2	U		2	U		2	U		2	U	
DIBROMOCHLOROMETHANE	2	U		2	U		2	U		2	U		2	U	
1,1,2-TRICHLOROETHANE	2	U		2	U		2	U		2	U		2	U	
BENZENE	2	U		0.2	J		2	U		2	U		2	U	
TRANS-1,3-DICHLOROPROPENE	2	U		2	U		2	U		2	U		2	U	
BROMOFORM	2	R		2	R		2	R		2	R		2	U	
4-METHYL-2-PENTANONE	2	U		2	U		2	U		2	U		2	U	
2-HEXANONE	2	U		2	U		2	U		2	U		2	U	
TETRACHLOROETHENE	2	U		2	U		2	U		2	U		2	U	
1,1,2,2-TETRACHLOROETHANE	2	R		2	R		2	R		2	R		2	U	
TOLUENE	2	U		2	U		2	U		2	U		2	U	
CHLOROBENZENE	2	U		2	U		2	U		2	U		2	U	
ETHYLBENZENE	2	U		2	U		2	U		2	U		2	U	
STYRENE	2	U		2	U		2	U		2	U		2	U	
XYLENE (TOTAL)	2	U		2	U		2	U		2	U		2	U	

TABLE B-10
NAVAL FUEL DEPOT POINT MOLATE
ANALYTICAL RESULTS OF VOLATILES IN GROUNDWATER SAMPLES
TRIP BLANK

Project : POINT MOLATE
Lab. : ETCMP
FILTER : SUBSTR(CLIENTSID,1,2)='TB' AND TIC='N'
Date : 06/24/94 11:41:01

PRC Sample ID	TB11-04			TB11-05											
Lab Samp Id	9403145-03A			9404010-03A											
Matrix	WATER			WATER											
Units	UG/L			UG/L											
Date Received	03/30/94			04/01/94											
Date Analyzed	04/06/94			04/07/94											
Compound	Result	Val	Com	Result	Val	Com	Result	Val	Com	Result	Val	Com	Result	Val	Com
CHLOROMETHANE	2	U		2	U										
BROMOMETHANE	2	U		2	U										
VINYL CHLORIDE	2	U		2	U										
CHLOROETHANE	2	U		2	U										
METHYLENE CHLORIDE	2	U		2	U										
ACETONE	2	U		2	UJ-K										
CARBON DISULFIDE	2	U		2	U										
1,1-DICHLOROETHENE	2	U		2	U										
1,1-DICHLOROETHANE	2	U		2	U										
1,2-DICHLOROETHENE (TOTAL)	2	U		2	U										
CHLOROFORM	2	U		2	U										
1,2-DICHLOROETHANE	2	U		2	U										
2-BUTANONE	2	U		2	U										
1,1,1-TRICHLOROETHANE	2	U		2	U										
CARBON TETRACHLORIDE	2	U		2	U										
BROMODICHLOROMETHANE	2	U		2	U										
1,2-DICHLOROPROPANE	2	U		2	U										
CIS-1,3-DICHLOROPROPENE	2	U		2	U										
TRICHLOROETHENE	2	U		2	U										
DIBROMOCHLOROMETHANE	2	U		2	U										
1,1,2-TRICHLOROETHANE	2	U		2	U										
BENZENE	2	U		2	U										
TRANS-1,3-DICHLOROPROPENE	2	U		2	U										
BROMOFORM	2	U		2	U										
4-METHYL-2-PENTANONE	2	U		2	U										
2-HEXANONE	2	U		2	U										
TETRACHLOROETHENE	2	U		2	U										
1,1,2,2-TETRACHLOROETHANE	2	U		2	U										
TOLUENE	2	U		2	U										
CHLOROBENZENE	2	U		2	U										
ETHYLBENZENE	2	U		2	U										
STYRENE	2	U		2	U										
XYLENE (TOTAL)	2	U		2	U										

TABLE B-10
NAVAL FUEL DEPOT POINT MOLATE
ANALYTICAL RESULTS OF VOLATILES IN GROUNDWATER SAMPLES
EQUIPMENT BLANK

Project : POINT MOLATE
Lab. : ETCMP
FILTER : SUBSTR(CLIENTSID,1,2)='EB' AND TIC='N'
Date : 06/24/94 11:38:04

PRC Sample ID	EB00-02			EB00-01			EB11-01								
Lab Samp Id	9403102-03A			9403102-04A			9403113-02A								
Matrix	WATER			WATER			WATER								
Units	UG/L			UG/L			UG/L								
Date Received	03/22/94			03/22/94			03/24/94								
Date Analyzed	03/28/94			03/28/94			03/30/94								
Compound	Result	Val	Com	Result	Val	Com	Result	Val	Com	Result	Val	Com	Result	Val	Com
CHLOROMETHANE	2	U		2	U		2	U							
BROMOMETHANE	2	U		2	U		2	U							
VINYL CHLORIDE	2	U		2	U		2	U							
CHLOROETHANE	2	U		2	U		2	U							
METHYLENE CHLORIDE	0.3	J		2	U		2	U							
ACETONE	11			7	J-K		6	J-K							
CARBON DISULFIDE	2	U		2	U		2	U							
1,1-DICHLOROETHENE	2	U		2	U		2	U							
1,1-DICHLOROETHANE	2	U		2	U		2	U							
1,2-DICHLOROETHENE (TOTAL)	2	U		2	U		2	U							
CHLOROFORM	2	U		19			2	U							
1,2-DICHLOROETHANE	2	U		2	U		2	U							
2-BUTANONE	7			2	U		2	U							
1,1,1-TRICHLOROETHANE	2	U		2	U		2	U							
CARBON TETRACHLORIDE	2	U		2	U		2	U							
BROMODICHLOROMETHANE	2	U		2	J		2	U							
1,2-DICHLOROPROPANE	2	U		2	U		2	U							
CIS-1,3-DICHLOROPROPENE	2	U		2	U		2	U							
TRICHLOROETHENE	2	U		2	U		2	U							
DIBROMOCHLOROMETHANE	2	U		2	U		2	U							
1,1,2-TRICHLOROETHANE	2	U		2	U		2	U							
BENZENE	2	U		2	U		0.3	J							
TRANS-1,3-DICHLOROPROPENE	2	U		2	U		2	U							
BROMOFORM	2	R		2	R		2	R							
4-METHYL-2-PENTANONE	2	U		2	U		2	U							
2-HEXANONE	2	U		2	U		2	U							
TETRACHLOROETHENE	2	U		2	U		2	U							
1,1,2,2-TETRACHLOROETHANE	2	R		2	R		2	R							
TOLUENE	1	J		0.5	J		4								
CHLOROBENZENE	2	U		2	U		2	U							
ETHYLBENZENE	2	U		2	U		0.2	J							
STYRENE	2	U		2	U		2	U							
XYLENE (TOTAL)	2	U		2	U-B		0.8	J							

TABLE B-10
NAVAL FUEL DEPOT POINT MOLATE
ANALYTICAL RESULTS OF SEMIVOLATILES IN GROUNDWATER SAMPLES
EQUIPMENT BLANK

Project : POINT MOLATE
Lab. : ETCMP
FILTER : SUBSTR(CLIENTSID,1,2)='EB' AND TIC='N'
Date : 06/24/94 11:47:16

PRC Sample ID	EB00-02			EB00-01				EB00-02			EB00-01		
Lab Samp Id	9403102-03C			9403102-04C				9403102-03C			9403102-04C		
Matrix	WATER			WATER				WATER			WATER		
Units	UG/L			UG/L				UG/L			UG/L		
Date Received	03/22/94			03/22/94				03/22/94			03/22/94		
Date Extracted	03/24/94			03/24/94				03/24/94			03/24/94		
Date Analyzed	04/13/94			04/13/94				04/13/94			04/13/94		
Compound	Result	Val	Com	Result	Val	Com	Compound	Result	Val	Com	Result	Val	Com
PHENOL	2	J		11	U		2,4-DINITROPHENOL	25	U		26	U	
BIS(2-CHLOROETHYL)ETHER	10	U		11	U		4-NITROPHENOL	25	U		26	U	
2-CHLOROPHENOL	10	U		11	U		DIBENZOFURAN	10	U		11	U	
1,3-DICHLOROBENZENE	10	U		11	U		2,4-DINITROTOLUENE	10	U		11	U	
1,4-DICHLOROBENZENE	10	U		11	U		DIETHYLPHTHALATE	0.8	J		11	U	
1,2-DICHLOROBENZENE	10	U		11	U		4-CHLOROPHENYL-PHENYLETHER	10	U		11	U	
2-METHYLPHENOL	10	U		11	U		FLUORENE	10	U		11	U	
2,2'-OXYBIS(1-CHLOROPROPANE)	10	U		11	U		4-NITROANILINE	25	U		26	U	
4-METHYLPHENOL	10	U		11	U		4,6-DINITRO-2-METHYLPHENOL	25	U		26	U	
N-NITROSO-DI-N-PROPYLAMINE	10	U		11	U		N-NITROSODIPHENYLAMINE (1)	10	U		11	U	
HEXACHLOROETHANE	10	U		11	U		4-BROMOPHENYL-PHENYLETHER	10	U		11	U	
NITROBENZENE	10	U		11	U		HEXACHLOROBENZENE	10	U		11	U	
ISOPHORONE	10	U		11	U		PENTACHLOROPHENOL	25	U		26	U	
2-NITROPHENOL	10	U		11	U		PHENANTHRENE	10	U		11	U	
2,4-DIMETHYLPHENOL	10	U		11	U		ANTHRACENE	10	U		11	U	
BIS(2-CHLOROETHOXY)METHANE	10	U		11	U		CARBAZOLE	10	U		11	U	
2,4-DICHLOROPHENOL	10	U		11	U		DI-N-BUTYLPHTHALATE	10	U		11	U	
1,2,4-TRICHLOROBENZENE	10	U		11	U		FLUORANTHENE	10	U		11	U	
NAPHTHALENE	10	U		11	U		PYRENE	10	U		11	U	
4-CHLOROANILINE	10	U		11	U		BUTYLBENZYLPHTHALATE	10	U		11	U	
HEXACHLOROBUTADIENE	10	U		11	U		3,3'-DICHLOROBENZIDINE	10	U		11	U	
4-CHLORO-3-METHYLPHENOL	10	U		11	U		BENZO(A)ANTHRACENE	10	U		11	U	
2-METHYLNAPHTHALENE	10	U		11	U		CHRYSENE	10	U		11	U	
HEXACHLOROCYCLOPENTADIENE	10	U		11	U		BIS(2-ETHYLHEXYL)PHTHALATE	10	U		9	BJ	
2,4,6-TRICHLOROPHENOL	10	U		11	U		DI-N-OCTYLPHTHALATE	10	U		11	U	
2,4,5-TRICHLOROPHENOL	25	U		26	U		BENZO(B)FLUORANTHENE	10	U		11	U	
2-CHLORONAPHTHALENE	10	U		11	U		BENZO(K)FLUORANTHENE	10	U		11	U	
2-NITROANILINE	25	U		26	U		BENZO(A)PYRENE	10	U		11	U	
DIMETHYLPHTHALATE	10	U		11	U		INDENO(1,2,3-CD)PYRENE	10	U		11	U	
ACENAPHTHYLENE	10	U		11	U		DIBENZ(A,H)ANTHRACENE	10	U		11	U	
2,6-DINITROTOLUENE	10	U		11	U		BENZO(G,H,I)PERYLENE	10	U		11	U	
3-NITROANILINE	25	U		26	U								
ACENAPHTHENE	10	U		11	U								

TABLE B-10
NAVAL FUEL DEPOT POINT MOLATE
ANALYTICAL RESULTS OF SEMIVOLATILES IN GROUNDWATER SAMPLES
EQUIPMENT BLANK

Project : POINT MOLATE
Lab. : ETCMP
FILTER : SUBSTR(CLIENTSID,1,2)='EB' AND TIC='N'
Date : 06/24/94 11:47:16

PRC Sample ID	EB11-01							EB11-01					
Lab Samp Id	9403113-02C							9403113-02C					
Matrix	WATER							WATER					
Units	UG/L							UG/L					
Date Received	03/24/94							03/24/94					
Date Extracted	03/28/94							03/28/94					
Date Analyzed	04/19/94							04/19/94					
Compound	Result	Val	Com	Result	Val	Com	Compound	Result	Val	Com	Result	Val	Com
PHENOL	10	U					2,4-DINITROPHENOL	26	U				
BIS(2-CHLOROETHYL)ETHER	10	U					4-NITROPHENOL	26	U				
2-CHLOROPHENOL	10	U					DIBENZOFURAN	10	U				
1,3-DICHLOROBENZENE	10	U					2,4-DINITROTOLUENE	10	U				
1,4-DICHLOROBENZENE	10	U					DIETHYLPHTHALATE	10	U				
1,2-DICHLOROBENZENE	10	U					4-CHLOROPHENYL-PHENYLETHER	10	U				
2-METHYLPHENOL	10	U					FLUORENE	10	U				
2,2'-OXYBIS(1-CHLOROPROPANE)	10	U					4-NITROANILINE	26	U				
4-METHYLPHENOL	10	U					4,6-DINITRO-2-METHYLPHENOL	26	U				
N-NITROSO-DI-N-PROPYLAMINE	10	U					N-NITROSODIPHENYLAMINE (1)	10	U				
HEXACHLOROETHANE	10	U					4-BROMOPHENYL-PHENYLETHER	10	U				
NITROBENZENE	10	U					HEXACHLOROBENZENE	10	U				
ISOPHORONE	10	U					PENTACHLOROPHENOL	26	U				
2-NITROPHENOL	10	U					PHENANTHRENE	10	U				
2,4-DIMETHYLPHENOL	10	U					ANTHRACENE	10	U				
BIS(2-CHLOROETHOXY)METHANE	10	U					CARBAZOLE	10	U				
2,4-DICHLOROPHENOL	10	U					DI-N-BUTYLPHTHALATE	10	U				
1,2,4-TRICHLOROBENZENE	10	U					FLUORANTHENE	10	U				
NAPHTHALENE	10	U					PYRENE	10	U				
4-CHLOROANILINE	10	U					BUTYLBENZYLPHTHALATE	10	U				
HEXACHLOROBUTADIENE	10	U					3,3'-DICHLOROBENZIDINE	10	U				
4-CHLORO-3-METHYLPHENOL	10	U					BENZO(A)ANTHRACENE	10	U				
2-METHYLNAPHTHALENE	10	U					CHRYSENE	10	U				
HEXACHLOROCYCLOPENTADIENE	10	U					BIS(2-ETHYLHEXYL)PHTHALATE	71					
2,4,6-TRICHLOROPHENOL	10	U					DI-N-OCTYLPHTHALATE	10	U				
2,4,5-TRICHLOROPHENOL	26	U					BENZO(B)FLUORANTHENE	10	U				
2-CHLORONAPHTHALENE	10	U					BENZO(K)FLUORANTHENE	10	U				
2-NITROANILINE	26	U					BENZO(A)PYRENE	10	U				
DIMETHYLPHTHALATE	10	U					INDENO(1,2,3-CD)PYRENE	10	U				
ACENAPHTHYLENE	10	U					DIBENZ(A,H)ANTHRACENE	10	U				
2,6-DINITROTOLUENE	10	U					BENZO(G,H,I)PERYLENE	10	U				
3-NITROANILINE	26	U											
ACENAPHTHENE	10	U											

TABLE B-10
NAVAL FUEL DEPOT POINT MOLATE
ANALYTICAL RESULTS OF VOLATILES IN GROUNDWATER SAMPLES
METHOD BLANK

Project : POINT MOLATE
Lab. : ETCMP
FILTER : SMPTYPE='MBLK'
Date : 06/24/94 11:45:13

PRC Sample ID	VBLKBE			VBLKBF			VBLKBG			VBLKBH			VBLKBI		
Lab Samp Id	B8240W-B361A			B8240W-B362A			B8240W-B363A			B8240W-B364A			B8240W-B365A		
Matrix	WATER			WATER			WATER			WATER			WATER		
Units	UG/L			UG/L			UG/L			UG/L			UG/L		
Date Received															
Date Analyzed	03/28/94			03/30/94			03/31/94			04/04/94			04/06/94		
Compound	Result	Val	Com	Result	Val	Com	Result	Val	Com	Result	Val	Com	Result	Val	Com
CHLOROMETHANE	2	U		2	U		2	U		2	U		2	U	
BROMOMETHANE	2	U		2	U		2	U		2	U		2	U	
VINYL CHLORIDE	2	U		2	U		2	U		2	U		2	U	
CHLOROETHANE	2	U		2	U		2	U		2	U		2	U	
METHYLENE CHLORIDE	2	U		2	U		2	U		2	U		0.6	J	
ACETONE	2	U		2	U		2	U		2	U		2	U	
CARBON DISULFIDE	2	U		2	U		2	U		2	U		2	U	
1,1-DICHLOROETHENE	2	U		2	U		2	U		2	U		2	U	
1,1-DICHLOROETHANE	2	U		2	U		2	U		2	U		2	U	
1,2-DICHLOROETHENE (TOTAL)	2	U		2	U		2	U		2	U		2	U	
CHLOROFORM	2	U		2	U		2	U		2	U		2	U	
1,2-DICHLOROETHANE	2	U		2	U		2	U		2	U		2	U	
2-BUTANONE	2	U		2	U		2	U		2	U		2	U	
1,1,1-TRICHLOROETHANE	2	U		2	U		2	U		2	U		2	U	
CARBON TETRACHLORIDE	2	U		2	U		2	U		2	U		2	U	
BROMODICHLOROMETHANE	2	U		2	U		2	U		2	U		2	U	
1,2-DICHLOROPROPANE	2	U		2	U		2	U		2	U		2	U	
CIS-1,3-DICHLOROPROPENE	2	U		2	U		2	U		2	U		2	U	
TRICHLOROETHENE	2	U		2	U		2	U		2	U		2	U	
DIBROMOCHLOROMETHANE	2	U		2	U		2	U		2	U		2	U	
1,1,2-TRICHLOROETHANE	2	U		2	U		2	U		2	U		2	U	
BENZENE	2	U		2	U		2	U		2	U		2	U	
TRANS-1,3-DICHLOROPROPENE	2	U		2	U		2	U		2	U		2	U	
BROMOFORM	2	U		2	U		2	U		2	U		2	U	
4-METHYL-2-PENTANONE	2	U		2	U		2	U		2	U		2	U	
2-HEXANONE	2	U		2	U		2	U		2	U		2	U	
TETRACHLOROETHENE	2	U		2	U		2	U		2	U		2	U	
1,1,2,2-TETRACHLOROETHANE	2	U		2	U		2	U		2	U		2	U	
TOLUENE	2	U		2	U		2	U		2	U		2	U	
CHLOROBENZENE	2	U		2	U		2	U		2	U		2	U	
ETHYLBENZENE	2	U		2	U		2	U		2	U		2	U	
STYRENE	2	U		2	U		2	U		2	U		2	U	
XYLENE (TOTAL)	0.2	J		2	U		2	U		0.2	J		0.2	J	

TABLE B-10
NAVAL FUEL DEPOT POINT MOLATE
ANALYTICAL RESULTS OF VOLATILES IN GROUNDWATER SAMPLES
METHOD BLANK

Project : POINT MOLATE
Lab. : ETCMP
FILTER : SMPTYPE='MBLK'
Date : 06/24/94 11:45:13

PRC Sample ID	VBLKBJ			VBLKBK			VBLKBI								
Lab Samp Id	B8240W-B366A			B8240W-B367A			B8240W-B365A								
Matrix	WATER			WATER			WATER								
Units	UG/L			UG/L			UG/L								
Date Received															
Date Analyzed	04/07/94			04/08/94			04/06/94								
Compound	Result	Val	Com	Result	Val	Com	Result	Val	Com	Result	Val	Com	Result	Val	Com
CHLOROMETHANE	2	U		2	U		2	U							
BROMOMETHANE	2	U		2	U		2	U							
VINYL CHLORIDE	2	U		2	U		2	U							
CHLOROETHANE	2	U		2	U		2	U							
METHYLENE CHLORIDE	0.6	J		2	U		0.6	J							
ACETONE	2	U		2	U		2	U							
CARBON DISULFIDE	2	U		2	U		2	U							
1,1-DICHLOROETHENE	2	U		2	U		2	U							
1,1-DICHLOROETHANE	2	U		2	U		2	U							
1,2-DICHLOROETHENE (TOTAL)	2	U		2	U		2	U							
CHLOROFORM	2	U		2	U		2	U							
1,2-DICHLOROETHANE	2	U		2	U		2	U							
2-BUTANONE	2	U		2	U		2	U							
1,1,1-TRICHLOROETHANE	2	U		2	U		2	U							
CARBON TETRACHLORIDE	2	U		2	U		2	U							
BROMODICHLOROMETHANE	2	U		2	U		2	U							
1,2-DICHLOROPROPANE	2	U		2	U		2	U							
CIS-1,3-DICHLOROPROPENE	2	U		2	U		2	U							
TRICHLOROETHENE	2	U		2	U		2	U							
DIBROMOCHLOROMETHANE	2	U		2	U		2	U							
1,1,2-TRICHLOROETHANE	2	U		2	U		2	U							
BENZENE	2	U		2	U		2	U							
TRANS-1,3-DICHLOROPROPENE	2	U		2	U		2	U							
BROMOFORM	2	U		2	U		2	U							
4-METHYL-2-PENTANONE	2	U		2	U		2	U							
2-HEXANONE	2	U		2	U		2	U							
TETRACHLOROETHENE	2	U		2	U		2	U							
1,1,2,2-TETRACHLOROETHANE	2	U		2	U		2	U							
TOLUENE	2	U		2	U		2	U							
CHLOROBENZENE	2	U		2	U		2	U							
ETHYLBENZENE	2	U		2	U		2	U							
STYRENE	2	U		2	U		2	U							
XYLENE (TOTAL)	2	U		2	U		0.2	J							

TABLE B-10
NAVAL FUEL DEPOT POINT MOLATE
ANALYTICAL RESULTS OF SEMIVOLATILES IN GROUNDWATER SAMPLES
METHOD BLANK

Project : POINT MOLATE
Lab. : ETCMP
FILTER : SMPTYPE='MBLK' AND TIC='N'
Date : 06/24/94 11:48:44

PRC Sample ID	SBLKWE			SBLKWG				SBLKWE			SBLKWG		
Lab Samp Id	B625-0378A			B625-0378B				B625-0378A			B625-0378B		
Matrix	WATER			WATER				WATER			WATER		
Units	UG/L			UG/L				UG/L			UG/L		
Date Received													
Date Extracted	03/24/94			03/28/94				03/24/94			03/28/94		
Date Analyzed	04/13/94			04/21/94				04/13/94			04/21/94		
Compound	Result	Val	Com	Result	Val	Com	Compound	Result	Val	Com	Result	Val	Com
PHENOL	10	U		10	U		2,4-DINITROPHENOL	25	U		25	U	
BIS(2-CHLOROETHYL)ETHER	10	U		10	U		4-NITROPHENOL	25	U		25	U	
2-CHLOROPHENOL	10	U		10	U		DIBENZOFURAN	10	U		10	U	
1,3-DICHLOROBENZENE	10	U		10	U		2,4-DINITROTOLUENE	10	U		10	U	
1,4-DICHLOROBENZENE	10	U		10	U		DIETHYLPHTHALATE	10	U		10	U	
1,2-DICHLOROBENZENE	10	U		10	U		4-CHLOROPHENYL-PHENYLETHER	10	U		10	U	
2-METHYLPHENOL	10	U		10	U		FLUORENE	10	U		10	U	
2,2'-OXYBIS(1-CHLOROPROPANE)	10	U		10	U		4-NITROANILINE	25	U		25	U	
4-METHYLPHENOL	10	U		10	U		4,6-DINITRO-2-METHYLPHENOL	25	U		25	U	
N-NITROSO-DI-N-PROPYLAMINE	10	U		10	U		N-NITROSODIPHENYLAMINE (1)	10	U		10	U	
HEXACHLOROETHANE	10	U		10	U		4-BROMOPHENYL-PHENYLETHER	10	U		10	U	
NITROBENZENE	10	U		10	U		HEXACHLOROBENZENE	10	U		10	U	
ISOPHORONE	10	U		10	U		PENTACHLOROPHENOL	25	U		25	U	
2-NITROPHENOL	10	U		10	U		PHENANTHRENE	10	U		10	U	
2,4-DIMETHYLPHENOL	10	U		10	U		ANTHRACENE	10	U		10	U	
BIS(2-CHLOROETHOXY)METHANE	10	U		10	U		CARBAZOLE	10	U		10	U	
2,4-DICHLOROPHENOL	10	U		10	U		DI-N-BUTYLPHTHALATE	10	U		10	U	
1,2,4-TRICHLOROBENZENE	10	U		10	U		FLUORANTHENE	10	U		10	U	
NAPHTHALENE	10	U		10	U		PYRENE	10	U		10	U	
4-CHLOROANILINE	10	U		10	U		BUTYLBENZYLPHTHALATE	10	U		10	U	
HEXACHLOROBUTADIENE	10	U		10	U		3,3'-DICHLOROBENZIDINE	10	U		10	U	
4-CHLORO-3-METHYLPHENOL	10	U		10	U		BENZO(A)ANTHRACENE	10	U		10	U	
2-METHYLNAPHTHALENE	10	U		10	U		CHRYSENE	10	U		10	U	
HEXACHLOROCYCLOPENTADIENE	10	U		10	U		BIS(2-ETHYLHEXYL)PHTHALATE	4	J		10	U	
2,4,6-TRICHLOROPHENOL	10	U		10	U		DI-N-OCTYLPHTHALATE	10	U		10	U	
2,4,5-TRICHLOROPHENOL	25	U		25	U		BENZO(B)FLUORANTHENE	10	U		10	U	
2-CHLORONAPHTHALENE	10	U		10	U		BENZO(K)FLUORANTHENE	10	U		10	U	
2-NITROANILINE	25	U		25	U		BENZO(A)PYRENE	10	U		10	U	
DIMETHYLPHTHALATE	10	U		10	U		INDENO(1,2,3-CD)PYRENE	10	U		10	U	
ACENAPHTHYLENE	10	U		10	U		DIBENZ(A,H)ANTHRACENE	10	U		10	U	
2,6-DINITROTOLUENE	10	U		10	U		BENZO(G,H,I)PERYLENE	10	U		10	U	
3-NITROANILINE	25	U		25	U								
ACENAPHTHENE	10	U		10	U								

TABLE B-10
NAVAL FUEL DEPOT POINT MOLATE
ANALYTICAL RESULTS OF SEMIVOLATILES IN GROUNDWATER SAMPLES
METHOD BLANK

Project : POINT MOLATE
Lab. : ETCMP
FILTER : SMPTYPE='MBLK' AND TIC='N'
Date : 06/24/94 11:48:44

PRC Sample ID	SBLKWK			SBLKWN				SBLKWK			SBLKWN		
Lab Samp Id	B625-0381A			B625-0381B				B625-0381A			B625-0381B		
Matrix	WATER			WATER				WATER			WATER		
Units	UG/L			UG/L				UG/L			UG/L		
Date Received													
Date Extracted	03/31/94			04/04/94				03/31/94			04/04/94		
Date Analyzed	04/25/94			04/26/94				04/25/94			04/26/94		
Compound	Result	Val	Com	Result	Val	Com	Compound	Result	Val	Com	Result	Val	Com
PHENOL	10	U		10	U		2,4-DINITROPHENOL	25	U		25	U	
BIS(2-CHLOROETHYL)ETHER	10	U		10	U		4-NITROPHENOL	25	U		25	U	
2-CHLOROPHENOL	10	U		10	U		DIBENZOFURAN	10	U		10	U	
1,3-DICHLOROBENZENE	10	U		10	U		2,4-DINITROTOLUENE	10	U		10	U	
1,4-DICHLOROBENZENE	10	U		10	U		DIETHYLPHTHALATE	10	U		10	U	
1,2-DICHLOROBENZENE	10	U		10	U		4-CHLOROPHENYL-PHENYLETHER	10	U		10	U	
2-METHYLPHENOL	10	U		10	U		FLUORENE	10	U		10	U	
2,2'-OXYBIS(1-CHLOROPROPANE)	10	U		10	U		4-NITROANILINE	25	U		25	U	
4-METHYLPHENOL	10	U		10	U		4,6-DINITRO-2-METHYLPHENOL	25	U		25	U	
N-NITROSO-DI-N-PROPYLAMINE	10	U		10	U		N-NITROSODIPHENYLAMINE (1)	10	U		10	U	
HEXACHLOROETHANE	10	U		10	U		4-BROMOPHENYL-PHENYLETHER	10	U		10	U	
NITROBENZENE	10	U		10	U		HEXACHLOROBENZENE	10	U		10	U	
ISOPHORONE	10	U		10	U		PENTACHLOROPHENOL	25	U		25	U	
2-NITROPHENOL	10	U		10	U		PHENANTHRENE	10	U		10	U	
2,4-DIMETHYLPHENOL	10	U		10	U		ANTHRACENE	10	U		10	U	
BIS(2-CHLOROETHOXY)METHANE	10	U		10	U		CARBAZOLE	10	U		10	U	
2,4-DICHLOROPHENOL	10	U		10	U		DI-N-BUTYLPHTHALATE	10	U		10	U	
1,2,4-TRICHLOROBENZENE	10	U		10	U		FLUORANTHENE	10	U		10	U	
NAPHTHALENE	10	U		10	U		PYRENE	10	U		10	U	
4-CHLOROANILINE	10	U		10	U		BUTYLBENZYLPHTHALATE	10	U		10	U	
HEXACHLOROBUTADIENE	10	U		10	U		3,3'-DICHLOROBENZIDINE	10	U		10	U	
4-CHLORO-3-METHYLPHENOL	10	U		10	U		BENZO(A)ANTHRACENE	10	U		10	U	
2-METHYLNAPHTHALENE	10	U		10	U		CHRYSENE	10	U		10	U	
HEXACHLOROCYCLOPENTADIENE	10	U		10	U		BIS(2-ETHYLHEXYL)PHTHALATE	7	J		10	U	
2,4,6-TRICHLOROPHENOL	10	U		10	U		DI-N-OCTYLPHTHALATE	10	U		10	U	
2,4,5-TRICHLOROPHENOL	25	U		25	U		BENZO(B)FLUORANTHENE	10	U		10	U	
2-CHLORONAPHTHALENE	10	U		10	U		BENZO(K)FLUORANTHENE	10	U		10	U	
2-NITROANILINE	25	U		25	U		BENZO(A)PYRENE	10	U		10	U	
DIMETHYLPHTHALATE	10	U		10	U		INDENO(1,2,3-CD)PYRENE	10	U		10	U	
ACENAPHTHYLENE	10	U		10	U		DIBENZ(A,H)ANTHRACENE	10	U		10	U	
2,6-DINITROTOLUENE	10	U		10	U		BENZO(G,H,I)PERYLENE	10	U		10	U	
3-NITROANILINE	25	U		25	U								
ACENAPHTHENE	10	U		10	U								

TABLE B-10
NAVAL FUEL DEPOT POINT MOLATE
ANALYTICAL RESULTS OF SEMIVOLATILES IN GROUNDWATER SAMPLES
METHOD BLANK

Project : POINT MOLATE
Lab. : ETCMP
FILTER : SMPTYPE='MBLK' AND TIC='N'
Date : 06/24/94 11:48:44

PRC Sample ID	SBLKWT			SBLKWL				SBLKWT			SBLKWL		
Lab Samp Id	B625-0388A			B625-0382A				B625-0388A			B625-0382A		
Matrix	WATER			WATER				WATER			WATER		
Units	UG/L			UG/L				UG/L			UG/L		
Date Received													
Date Extracted	04/11/94			03/31/94				04/11/94			03/31/94		
Date Analyzed	05/02/94			04/22/94				05/02/94			04/22/94		
Compound	Result	Val	Com	Result	Val	Com	Compound	Result	Val	Com	Result	Val	Com
PHENOL	10	U		10	U		2,4-DINITROPHENOL	25	U		25	U	
BIS(2-CHLOROETHYL)ETHER	10	U		10	U		4-NITROPHENOL	25	U		25	U	
2-CHLOROPHENOL	10	U		10	U		DIBENZOFURAN	10	U		10	U	
1,3-DICHLOROBENZENE	10	U		10	U		2,4-DINITROTOLUENE	10	U		10	U	
1,4-DICHLOROBENZENE	10	U		10	U		DIETHYLPHTHALATE	10	U		10	U	
1,2-DICHLOROBENZENE	10	U		10	U		4-CHLOROPHENYL-PHENYLETHER	10	U		10	U	
2-METHYLPHENOL	10	U		10	U		FLUORENE	10	U		10	U	
2,2'-OXYBIS(1-CHLOROPROPANE)	10	U		10	U		4-NITROANILINE	25	U		25	U	
4-METHYLPHENOL	10	U		10	U		4,6-DINITRO-2-METHYLPHENOL	25	U		25	U	
N-NITROSO-DI-N-PROPYLAMINE	10	U		10	U		N-NITROSODIPHENYLAMINE (1)	10	U		10	U	
HEXACHLOROETHANE	10	U		10	U		4-BROMOPHENYL-PHENYLETHER	10	U		10	U	
NITROBENZENE	10	U		10	U		HEXACHLOROBENZENE	10	U		10	U	
ISOPHORONE	10	U		10	U		PENTACHLOROPHENOL	25	U		25	U	
2-NITROPHENOL	10	U		10	U		PHENANTHRENE	10	U		10	U	
2,4-DIMETHYLPHENOL	10	U		10	U		ANTHRACENE	10	U		10	U	
BIS(2-CHLOROETHOXY)METHANE	10	U		10	U		CARBAZOLE	10	U		10	U	
2,4-DICHLOROPHENOL	10	U		10	U		DI-N-BUTYLPHTHALATE	10	U		10	U	
1,2,4-TRICHLOROBENZENE	10	U		10	U		FLUORANTHENE	10	U		10	U	
NAPHTHALENE	10	U		10	U		PYRENE	10	U		10	U	
4-CHLOROANILINE	10	U		10	U		BUTYLBENZYLPHTHALATE	10	U		10	U	
HEXACHLOROBUTADIENE	10	U		10	U		3,3'-DICHLOROBENZIDINE	10	U		10	U	
4-CHLORO-3-METHYLPHENOL	10	U		10	U		BENZO(A)ANTHRACENE	10	U		10	U	
2-METHYLNAPHTHALENE	10	U		10	U		CHRYSENE	10	U		10	U	
HEXACHLOROCYCLOPENTADIENE	10	U		10	U		BIS(2-ETHYLHEXYL)PHTHALATE	10	U		7	J	
2,4,6-TRICHLOROPHENOL	10	U		10	U		DI-N-OCTYLPHTHALATE	10	U		10	U	
2,4,5-TRICHLOROPHENOL	25	U		25	U		BENZO(B)FLUORANTHENE	10	U		10	U	
2-CHLORONAPHTHALENE	10	U		10	U		BENZO(K)FLUORANTHENE	10	U		10	U	
2-NITROANILINE	25	U		25	U		BENZO(A)PYRENE	10	U		10	U	
DIMETHYLPHTHALATE	10	U		10	U		INDENO(1,2,3-CD)PYRENE	10	U		10	U	
ACENAPHTHYLENE	10	U		10	U		DIBENZ(A,H)ANTHRACENE	10	U		10	U	
2,6-DINITROTOLUENE	10	U		10	U		BENZO(G,H,I)PERYLENE	10	U		10	U	
3-NITROANILINE	25	U		25	U								
ACENAPHTHENE	10	U		10	U								

TABLE B-10
NAVAL FUEL DEPOT POINT MOLATE
ANALYTICAL RESULTS OF PESTICIDES/PCBS IN GROUNDWATER SAMPLES
METHOD BLANK

Project : POINT MOLATE
Lab. : ETCMP
FILTER : SMPTYPE='MBLK' AND TIC='N'
Date : 06/24/94 11:53:23

PRC Sample ID	PBLKWP			PBLKWT			PBLKWW			PBLKWS					
Lab Samp Id	B608_0207A			B608_0212A			B608_0214A			B608_0210A					
Matrix	WATER			WATER			WATER			WATER					
Units	UG/L			UG/L			UG/L			UG/L					
Date Received															
Date Extracted	03/24/94			04/04/94			04/11/94			03/31/94					
Date Analyzed	04/02/94			04/22/94			04/22/94			04/22/94					
Compound	Result	Val	Com	Result	Val	Com	Result	Val	Com	Result	Val	Com	Result	Val	Com
ALPHA-BHC	0.050	U		0.050	U		0.050	U		0.050	U				
BETA-BHC	0.050	U		0.050	U		0.050	U		0.050	U				
DELTA-BHC	0.050	U		0.050	U		0.050	U		0.050	U				
GAMMA-BHC (LINDANE)	0.050	U		0.050	U		0.050	U		0.050	U				
HEPTACHLOR	0.050	U		0.050	U		0.050	U		0.050	U				
ALDRIN	0.050	U		0.050	U		0.050	U		0.050	U				
HEPTACHLOR EPOXIDE	0.050	U		0.050	U		0.050	U		0.050	U				
ENDOSULFAN I	0.050	U		0.050	U		0.050	U		0.050	U				
DIELDRIN	0.10	U		0.10	U		0.10	U		0.10	U				
4,4'-DDE	0.10	U		0.10	U		0.10	U		0.10	U				
ENDRIN	0.10	U		0.10	U		0.10	U		0.10	U				
ENDOSULFAN II	0.10	U		0.10	U		0.10	U		0.10	U				
4,4'-DDD	0.10	U		0.10	U		0.10	U		0.10	U				
ENDOSULFAN SULFATE	0.10	U		0.10	U		0.10	U		0.10	U				
4,4'-DDT	0.10	U		0.10	U		0.10	U		0.10	U				
METHOXYCHLOR	0.50	U		0.50	U		0.50	U		0.50	U				
ENDRIN KETONE	0.10	U		0.10	U		0.10	U		0.10	U				
ENDRIN ALDEHYDE	0.10	U		0.10	U		0.10	U		0.10	U				
ALPHA-CHLORDANE	0.050	U		0.050	U		0.050	U		0.050	U				
GAMMA-CHLORDANE	0.050	U		0.050	U		0.050	U		0.050	U				
TOXAPHENE	5.0	U		5.0	U		5.0	U		5.0	U				
AROCLOR-1016	1.0	U		1.0	U		1.0	U		1.0	U				
AROCLOR-1221	2.0	U		2.0	U		2.0	U		2.0	U				
AROCLOR-1232	1.0	U		1.0	U		1.0	U		1.0	U				
AROCLOR-1242	1.0	U		1.0	U		1.0	U		1.0	U				
AROCLOR-1248	1.0	U		1.0	U		1.0	U		1.0	U				
AROCLOR-1254	1.0	U		1.0	U		1.0	U		1.0	U				
AROCLOR-1260	1.0	U		1.0	U		1.0	U		1.0	U				

APPENDIX C

HYDROCARBON IDENTIFICATION AND ANALYTICAL DATA

FRIEDMAN & BRUYA, INC.

ENVIRONMENTAL CHEMISTS

Date of Report: June 17, 1994
Date Received: April 1, 1994
Project: 044-0248-IRQSFW, PO #16838
Date Samples Extracted: April 12, 1994

RESULTS FROM THE ANALYSIS OF PRODUCT SAMPLES FOR FINGERPRINT CHARACTERIZATION BY CAPILLARY GAS CHROMATOGRAPHY USING A FLAME IONIZATION DETECTOR (FID) AND ELECTRON CAPTURE DETECTOR (ECD)

Sample ID	GC Characterization
MW11-93	The GC trace using the flame ionization detector (FID) showed the presence of medium boiling compounds. The patterns displayed by these peaks are indicative of diesel fuel or heating oil. The medium boiling compounds appeared as a ragged pattern of peaks eluting from n-C_8 to n-C_{30} showing a maximum near n-C_{18}. An absence of a dominant pattern of n-alkanes was seen. Peaks are seen on the GC/ECD trace indicative of halogenated or oxidized hydrocarbons. The material appears to have undergone chemical/biological degradation.
MW11-92	The GC trace using the flame ionization detector (FID) showed the presence of medium and high boiling compounds. The patterns displayed by these peaks are indicative of diesel fuel or heating oil, and Bunker C or lubricating oil. The medium boiling compounds appeared as a ragged pattern of peaks eluting from n-C_8 to n-C_{25} showing a maximum near n-C_{17}. An absence of a dominant pattern of n-alkanes was seen for this material. The medium boiling material appears to have undergone chemical/biological degradation. The high boiling compounds appeared as a broad hump eluting from n-C_{36} to n-C_{32} showing a maximum near n-C_{28}.

FRIEDMAN & BRUYA, INC.

ENVIRONMENTAL CHEMISTS

Date of Report: June 17, 1994
Date Received: April 1, 1994
Project: 044-0248-IRQSFW, PO #16838
Date Samples Extracted: April 12, 1994

RESULTS FROM THE ANALYSIS OF PRODUCT SAMPLES FOR FINGERPRINT CHARACTERIZATION BY CAPILLARY GAS CHROMATOGRAPHY USING A FLAME IONIZATION DETECTOR (FID) AND ELECTRON CAPTURE DETECTOR (ECD)

Sample ID	GC Characterization
MW10-03	The GC trace using the flame ionization detector (FID) showed the presence of medium boiling compounds. The patterns displayed by these peaks are indicative of diesel fuel, most likely a JP-5 or JP-8. The medium boiling compounds appeared as a regular pattern of peaks eluting from n-C_7 to n-C_{20} showing a maximum near n-C_{12}. A regular pattern of the n-alkanes is seen for this product. The beginning of the diesel envelope shows some evaporative weathering.
MW11-54	The material present is similar to what was found in sample MW11-93.
ERM02-02	The GC trace using the flame ionization detector (FID) showed the presence of medium boiling compounds. The patterns displayed by these peaks are indicative of diesel fuel. It may be a JP-5 or JP-8, but it is too weathered for a more definitive statement. The medium boiling compounds appeared as a pattern of peaks eluting from n-C_7 to n-C_{18} showing a maximum near n-C_{11}. An absence of n-alkanes was seen. The material appears to have undergone chemical/biological degradation.

FRIEDMAN & BRUYA, INC.

ENVIRONMENTAL CHEMISTS

Date of Report: June 17, 1994
Date Received: April 1, 1994
Project: 044-0248-IRQSFW, PO #16838

RESULTS FROM THE ANALYSIS OF PRODUCT SAMPLES FOR SPECIFIC GRAVITY

Results Reported at 15.56°C

Sample ID	Specific Gravity
MW11-93	0.8733
MW11-92	0.9212
MW10-03	0.8225
MW11-54	0.8641
ERM02-02	0.8416

FRIEDMAN & BRUYA, INC.

ENVIRONMENTAL CHEMISTS

Date of Report: June 17, 1994
Date Received: April 1, 1994
Project: 044-0248-IRQSFW, PO #16838

RESULTS FROM THE ANALYSIS OF PRODUCT SAMPLES FOR VISCOSITY

Results Reported at 23°C

Sample ID	Viscosity
MW11-93	5.6 cSt
MW11-92	66 cSt
MW10-03	2.5 cSt
MW11-54	5.8 cSt
ERM02-02	2.9 cSt

FRIEDMAN & BRUYA, INC.

ENVIRONMENTAL CHEMISTS

Date of Report: June 17, 1994
Date Received: April 1, 1994
Project: 044-0248-IRQSFW, PO #16838
Date Extracts Analyzed: April 29, 1994

RESULTS FROM THE ANALYSIS OF PRODUCT SAMPLES FOR BENZENE, TOLUENE, ETHYLBENZENE AND THE XYLENES USING METHOD 8020

Results Reported as µg/g (ppm)

Sample ID	Benzene	Toluene	Ethylbenzene	Total Xylenes
MW11-93	<400[ip]	<150[ip]	<500[ip]	<100[ip]
MW11-92	<100[ip]	<50[ip]	<60[ip]	<100[ip]
MW10-03	<5[ip]	<700[ip]	<100[ip]	<2,000[ip]
MW11-54	<1,000[ip]	<400[ip]	<1,000[ip]	<500[ip]
ERM02-02	1,100[ip]	600[ip]	480[ip]	130[ip]
Quality Assurance				
Blank	<10	<10	<10	<20
ERM02-02 (Duplicate)	780[ip]	140[ip]	620[ip]	80[ip]
ERM02-02 (Matrix Spike) % Recovery	84%	98%	86%	74%
ERM02-02 (Matrix Spike Duplicate) % Recovery	27%[vo]	100%	57%	73%
Spike Level	1,000	1,000	1,000	2,000

[ip] Interferences were present which prevented the identification and quantitation of the analyte at the established detection limit.
[vo] Value reported fell outside the control limits established for this analyte.

FRIEDMAN & BRUYA, INC.

ENVIRONMENTAL CHEMISTS

Date of Report: June 17, 1994
Date Received: April 1, 1994
Project: 044-0248-IRQSFW, PO #16838
Date Samples Extracted: April 14, 1994
Date Extracts Analyzed: April 14, 1994

RESULTS FROM THE ANALYSIS OF PRODUCT SAMPLES FOR ORGANIC LEAD BY ICP (METHOD 6010)

Results Reported as µg/g (ppm)

Sample ID	Organic Lead
MW11-93	42
MW11-92	15
MW10-03	<1
MW11-54	300
ERM02-02	<1

Quality Assurance

Blank	<1
ERM02-02 (Duplicate)	<1
ERM02-02 (Matrix Spike) % Recovery	85%
ERM02-02 (Matrix Spike Duplicate) % Recovery	76%
Spike Blank % Recovery	89%
Spike Level	12

FRIEDMAN & BRUYA, INC.

ENVIRONMENTAL CHEMISTS

Date of Report: June 17, 1994
Date Received: April 1, 1994
Project: 044-0248-IRQSFW, PO #16838

RESULTS FROM THE ANALYSIS OF PRODUCT SAMPLES FOR TOTAL LEAD

Results Reported as µg/g (ppm)

Sample ID	Lead
MW11-93	34
MW11-92	11
MW10-03	<2
MW11-54	300
ERM02-02	<2

Quality Assurance	
Blank	<2
ERM02-02 (Duplicate)	<2
ERM02-02 (Matrix Spike) % Recovery	78%
ERM02-02 (Matrix Spike Duplicate) % Recovery	84%
Spike Blank % Recovery	99%
Spike Level	12

FRIEDMAN & BRUYA, INC.

ENVIRONMENTAL CHEMISTS

Date of Report: June 17, 1994
Date Received: April 1, 1994
Project: 044-0248-IRQSFW, PO #16838

RESULTS FROM THE ANALYSIS OF PRODUCT SAMPLES FOR FINGERPRINT CHARACTERIZATION BY CAPILLARY GAS CHROMATOGRAPHY USING FLAME IONIZATION DETECTION (FID) AND ELECTRON CAPTURE DETECTION (ECD)

Sample ID	GC Characterization
MW11-93	The diesel range material was found at a level of 4,200 ppm and was distributed as follows: 5.2% eluted by n-C_{11} 15.9% eluted by n-C_{12} 31.5% eluted by n-C_{13} 47.4% eluted by n-C_{14} 61.0% eluted by n-C_{15} 70.1% eluted by n-C_{16} 77.3% eluted by n-C_{17} 84.9% eluted by n-C_{18} 90.4% eluted by n-C_{19} 93.8% eluted by n-C_{20} 96.3% eluted by n-C_{21} 97.8% eluted by n-C_{22} 98.6% eluted by n-C_{23} 99.2% eluted by n-C_{24} 99.6% eluted by n-C_{25} 99.9% eluted by n-C_{26}
MW11-92	The diesel range material was found at a level of 3,100 ppm and was distributed as follows: 1.0% eluted by n-C_{11} 3.4% eluted by n-C_{12} 8.1% eluted by n-C_{13} 14.5% eluted by n-C_{14} 23.0% eluted by n-C_{15} 32.5% eluted by n-C_{16} 42.8% eluted by n-C_{17} 54.4% eluted by n-C_{18} 64.9% eluted by n-C_{19} 73.2% eluted by n-C_{20} 80.4% eluted by n-C_{21} 86.4% eluted by n-C_{22} 90.5% eluted by n-C_{23} 94.0% eluted by n-C_{24} 97.0% eluted by n-C_{25} 99.9% eluted by n-C_{26}

FRIEDMAN & BRUYA, INC.

ENVIRONMENTAL CHEMISTS

Date of Report: June 17, 1994
Date Received: April 1, 1994
Project: 044-0248-IRQSFW, PO #16838

RESULTS FROM THE ANALYSIS OF PRODUCT SAMPLES FOR FINGERPRINT CHARACTERIZATION BY CAPILLARY GAS CHROMATOGRAPHY USING FLAME IONIZATION DETECTION (FID) AND ELECTRON CAPTURE DETECTION (ECD)

Sample ID	GC Characterization
MW10-03	The diesel range material was found at a level of 6,700 ppm and was distributed as follows: 1.2% eluted by n-C_{10} 13.0% eluted by n-C_{11} 38.8% eluted by n-C_{12} 66.9% eluted by n-C_{13} 88.4% eluted by n-C_{14} 96.0% eluted by n-C_{15} 98.1% eluted by n-C_{16} 99.0% eluted by n-C_{17} 99.4% eluted by n-C_{18} 98.8% eluted by n-C_{19} 99.9% eluted by n-C_{20} 100% eluted by n-C_{21}
MW11-54	The diesel range material was found at a level of 4,600 ppm and was distributed as follows: 4.4% eluted by n-C_{11} 13.6% eluted by n-C_{12} 26.6% eluted by n-C_{13} 41.5% eluted by n-C_{14} 54.3% eluted by n-C_{15} 64.3% eluted by n-C_{16} 73.2% eluted by n-C_{17} 82.5% eluted by n-C_{18} 89.5% eluted by n-C_{19} 93.7% eluted by n-C_{20} 96.3% eluted by n-C_{21} 98.2% eluted by n-C_{22} 99.2% eluted by n-C_{23} 99.9% eluted by n-C_{24}

FRIEDMAN & BRUYA, INC.

ENVIRONMENTAL CHEMISTS

Date of Report: June 17, 1994
Date Received: April 1, 1994
Project: 044-0248-IRQSFW, PO #16838

RESULTS FROM THE ANALYSIS OF PRODUCT SAMPLES FOR FINGERPRINT CHARACTERIZATION BY CAPILLARY GAS CHROMATOGRAPHY USING FLAME IONIZATION DETECTION (FID) AND ELECTRON CAPTURE DETECTION (ECD)

Sample ID	GC Characterization
ERM02-02	The diesel range material was found at a level of 11,000 ppm and was distributed as follows: 1.7% eluted by n-C_{10} 10.1% eluted by n-C_{11} 29.3% eluted by n-C_{12} 53.6% eluted by n-C_{13} 81.6% eluted by n-C_{14} 95.8% eluted by n-C_{15} 99.0% eluted by n-C_{16} 99.7% eluted by n-C_{17} 99.9% eluted by n-C_{18}

FRIEDMAN & BRUYA, INC.

ENVIRONMENTAL CHEMISTS

Date of Report: June 17, 1994
Date Received: April 1, 1994
Project: 044-0248-IRQSFW, PO #16838
Date Samples Extracted: June 15, 1994

RESULTS FROM THE ANALYSIS OF PRODUCT SAMPLES FOR POLYNUCLEAR AROMATIC HYDROCARBONS (PNA) USING GC/MS

Results Reported as µg/g (ppm)

Sample ID	MW11-93	MW11-92	MW10-03
Analyte:			
Naphthalene	<30	<30	<30
Acenaphthylene	<30	<30	<30
Acenaphthene	97	68	<30
Fluorene	360	170	56
Phenanthrene	300	93	48
Anthracene	100	84	<30
Fluoranthene	<30	<30	<30
Pyrene	65	74	<30
Benzo[*a*]anthracene	38	61	<30
Chrysene	54	94	<30
Benzo[b] fluoranthene	<30	<30	<30
Benzo[k]fluoranthene	<30	<30	<30
Benzo[*a*]pyrene	<30	59	<30
Dibenz[*ah*]anthracene	<30	<30	<30
Idenopyrene	<30	<30	<30
Benzo[*ghi*]perylene	<30	<30	<30

FRIEDMAN & BRUYA, INC.

ENVIRONMENTAL CHEMISTS

Date of Report: June 17, 1994
Date Received: April 1, 1994
Project: 044-0248-IRQSFW, PO #16838
Date Samples Extracted: June 15, 1994

RESULTS FROM THE ANALYSIS OF PRODUCT SAMPLES FOR POLYNUCLEAR AROMATIC HYDROCARBONS (PNA) USING GC/MS

Results Reported as µg/g (ppm)

Sample ID	MW11-54	ERM02-02
Analyte:		
Naphthalene	<30	430
Acenaphthylene	<30	<30
Acenaphthene	61	88
Fluorene	210	92
Phenanthrene	240	<30
Anthracene	80	<30
Fluoranthene	<30	<30
Pyrene	47	<30
Benzo[*a*]anthracene	<30	<30
Chrysene	42	<30
Benzo[b] fluoranthene	<30	<30
Benzo[k]fluoranthene	<30	<30
Benzo[*a*]pyrene	<30	<30
Dibenz[*ah*]anthracene	<30	<30
Idenopyrene	<30	<30
Benzo[*ghi*]perylene	<30	<30

FRIEDMAN & BRUYA, INC.

ENVIRONMENTAL CHEMISTS

Date of Report: June 17, 1994
Date Received: April 1, 1994
Project: 044-0248-IRQSFW, PO #16838
Date Samples Extracted: June 15, 1994

RESULTS FROM THE ANALYSIS OF PRODUCT SAMPLES FOR POLYNUCLEAR AROMATIC HYDROCARBONS (PNA) USING GC/MS

Results Reported as µg/g (ppm)
Quality Assurance

Sample ID	Blank	ERM02-02 (Duplicate)
Analyte:		
Naphthalene	<30	580
Acenaphthylene	<30	<30
Acenaphthene	<30	50
Fluorene	<30	88
Phenanthrene	<30	<30
Anthracene	<30	<30
Fluoranthene	<30	<30
Pyrene	<30	<30
Benzo[*a*]anthracene	<30	<30
Chrysene	<30	<30
Benzo[b] fluoranthene	<30	<30
Benzo[k]fluoranthene	<30	<30
Benzo[*a*]pyrene	<30	<30
Dibenz[*ah*]anthracene	<30	<30
Idenopyrene	<30	<30
Benzo[*ghi*]perylene	<30	<30

FRIEDMAN & BRUYA, INC.

ENVIRONMENTAL CHEMISTS

Date of Report: June 17, 1994
Date Received: April 1, 1994
Project: 044-0248-IRQSFW, PO #16838
Date Samples Extracted: June 15, 1994

RESULTS FROM THE ANALYSIS OF PRODUCT SAMPLES FOR POLYNUCLEAR AROMATIC HYDROCARBONS (PNA) USING GC/MS

Results Reported as % Recovery
Quality Assurance

Sample ID	Spike Blank % Recovery	Spike Level
Analyte:		
Naphthalene	96%	10
Acenaphthylene	90%	10
Acenaphthene	90%	10
Fluorene	92%	10
Phenanthrene	85%	10
Anthracene	121%	10
Fluoranthene	92%	10
Pyrene	93%	10
Benzo[*a*]anthracene	97%	10
Chrysene	99%	10
Benzo[b] fluoranthene	101%	10
Benzo[k]fluoranthene	96%	10
Benzo[*a*]pyrene	101%	10
Dibenz[*ah*]anthracene	99%	10
Idenopyrene	99%	
Benzo[*ghi*]perylene	99%	

PRC
Environmental Management Inc.
120 Howard Street, Suite 700
San Francisco, CA 94105
415-543-4880
Fax 415-543-5480

Chain of Custody Record

04-01-94
11:03 Page 25 of

Lab: FREDMAN BRUYA

Project name:	PRC technical contact:	Field samplers:
PTI Nolate	DAVE WEST	G. Christen
Project number:	**PRC project manager:**	**Field samplers' signatures:**
Ø44-Ø248IRQSFW	DAVE WEST	

Sample ID	Sample Description/Notes	Date	Time	Matrix	40 ml VOA	1 Liter Amber	1 Liter Poly	Brass Tube	Glass Jar	CLP VOA	CLP SVOA	CLP Pest/PCBs	CLP Metals	TPH Purgeables	TPH Extractables	BTEX (8020)	TRPH (418.1)	Oil Quantity to be determined
MW11-93	48444 GEK 3/16/94	3/31/94	1650	Oil														X
MW11-92	48442 GEK	3/31/94	12/ØØ															X
MW1Ø-Ø3	48443 GEK	3/24/94	12/3Ø															X
MW11-54	48444 GEK	3/17/94	124Ø															X
EKMØ2-Ø2	48445 GEK	3/16/94	1235															X

GEK

	Name (print)	Company Name	Date	Time
Relinquished by:	Greg Christen	PRC	3/31/94	1500
Received by: FED EX AIRBILL #	231963 2711	FEDEX	3/31/94	1500
Relinquished by:				
Received by:	Charles Ruy	F+BF	04-01-94	11:03
Relinquished by:				
Received by:				
Relinquished by:				
Received by:				

Turnaround time/remarks: DAVE WEST will CALL OF FAX THE ANALYSIS REQUIRED. (PHONE 303-295-1181)
100% PRODUCT (All OIL) 17°C

WHITE-Laboratory Copy YELLOW-Project Office Copy

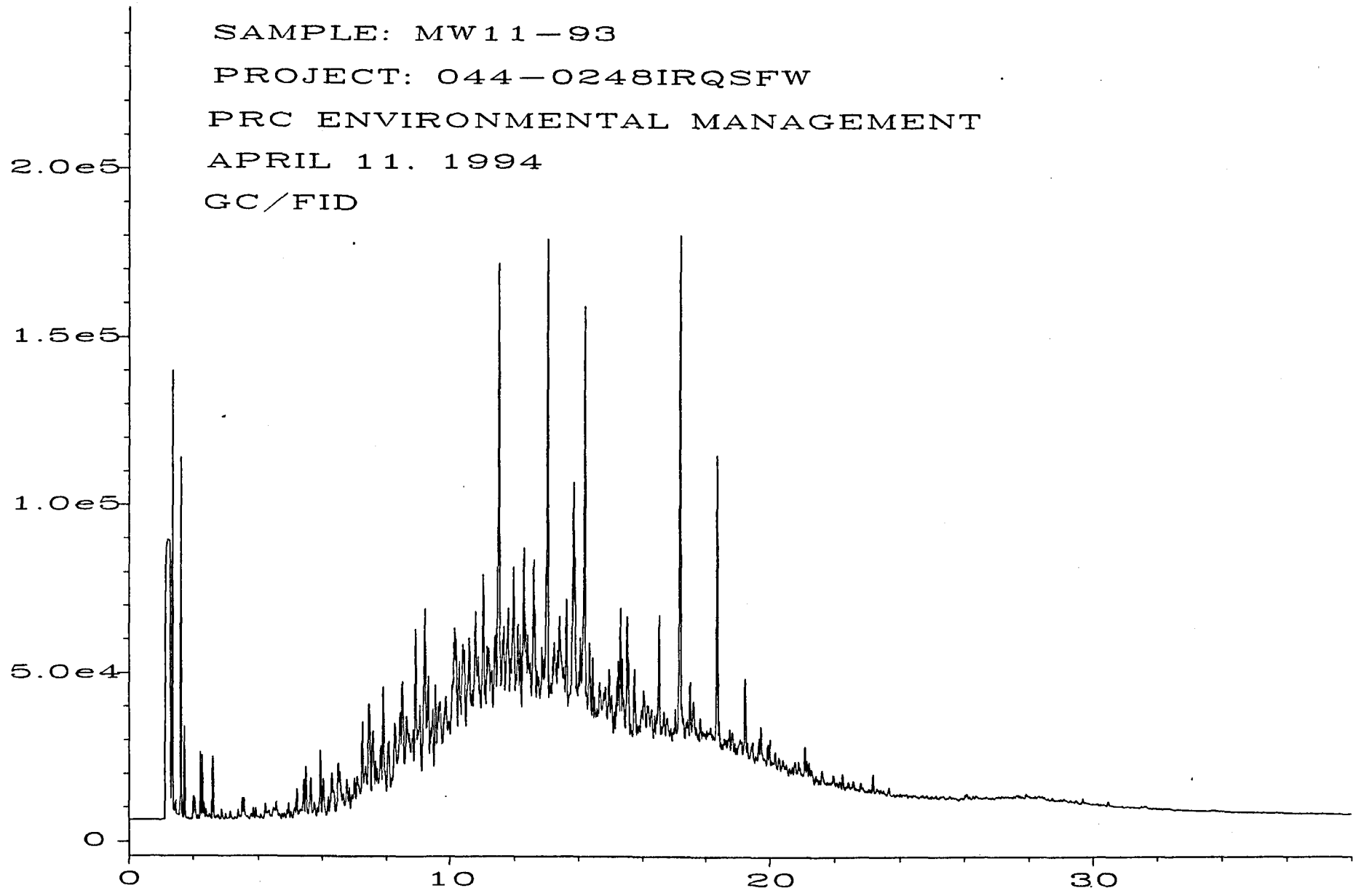

Sig. 1 in C:\HPCHEM\4\DATA\04-11-94.C\011F0901.D

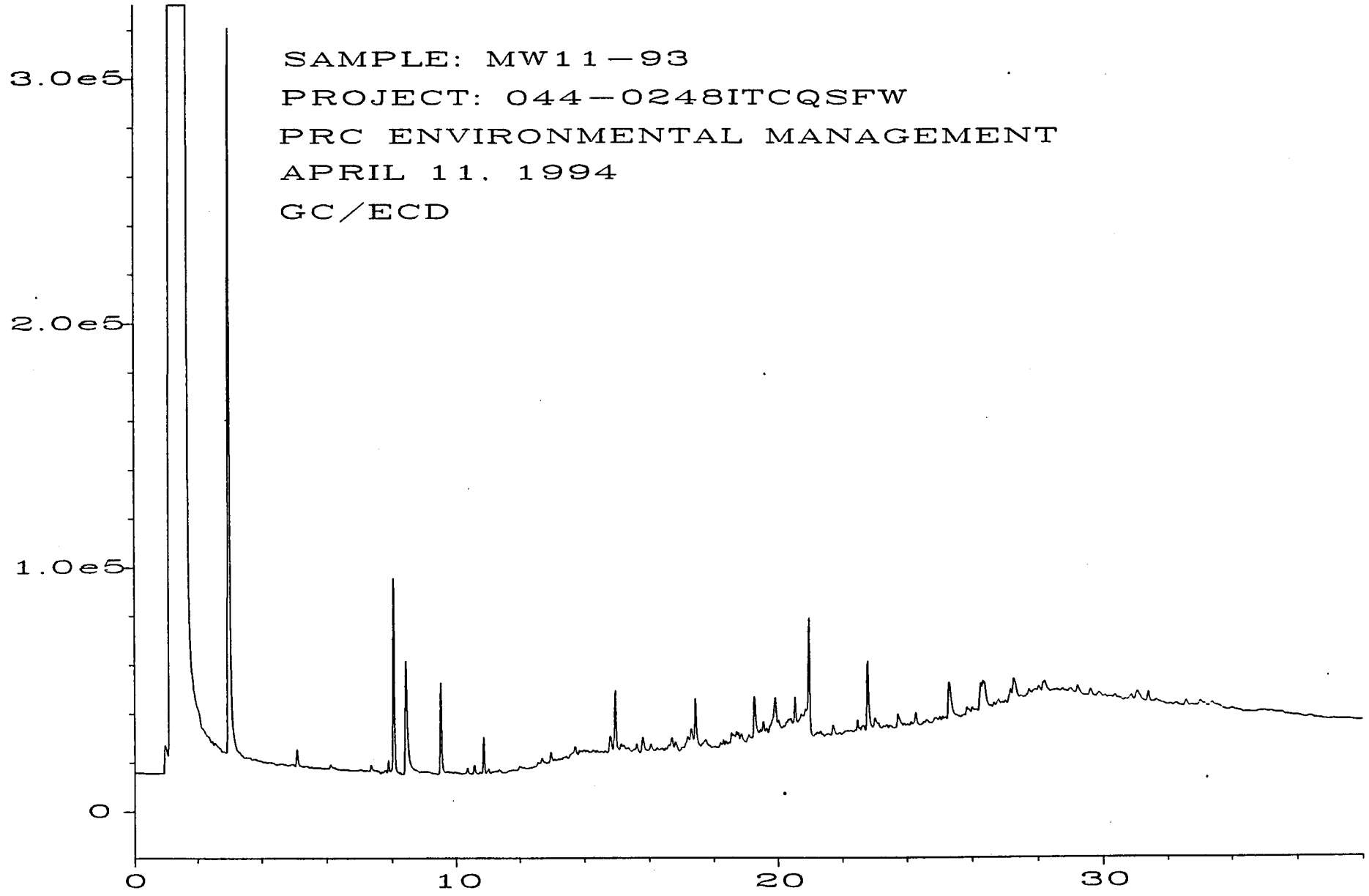

Sig. 2 in C:\HPCHEM\4\DATA\04-11-94.C\011R0901.D

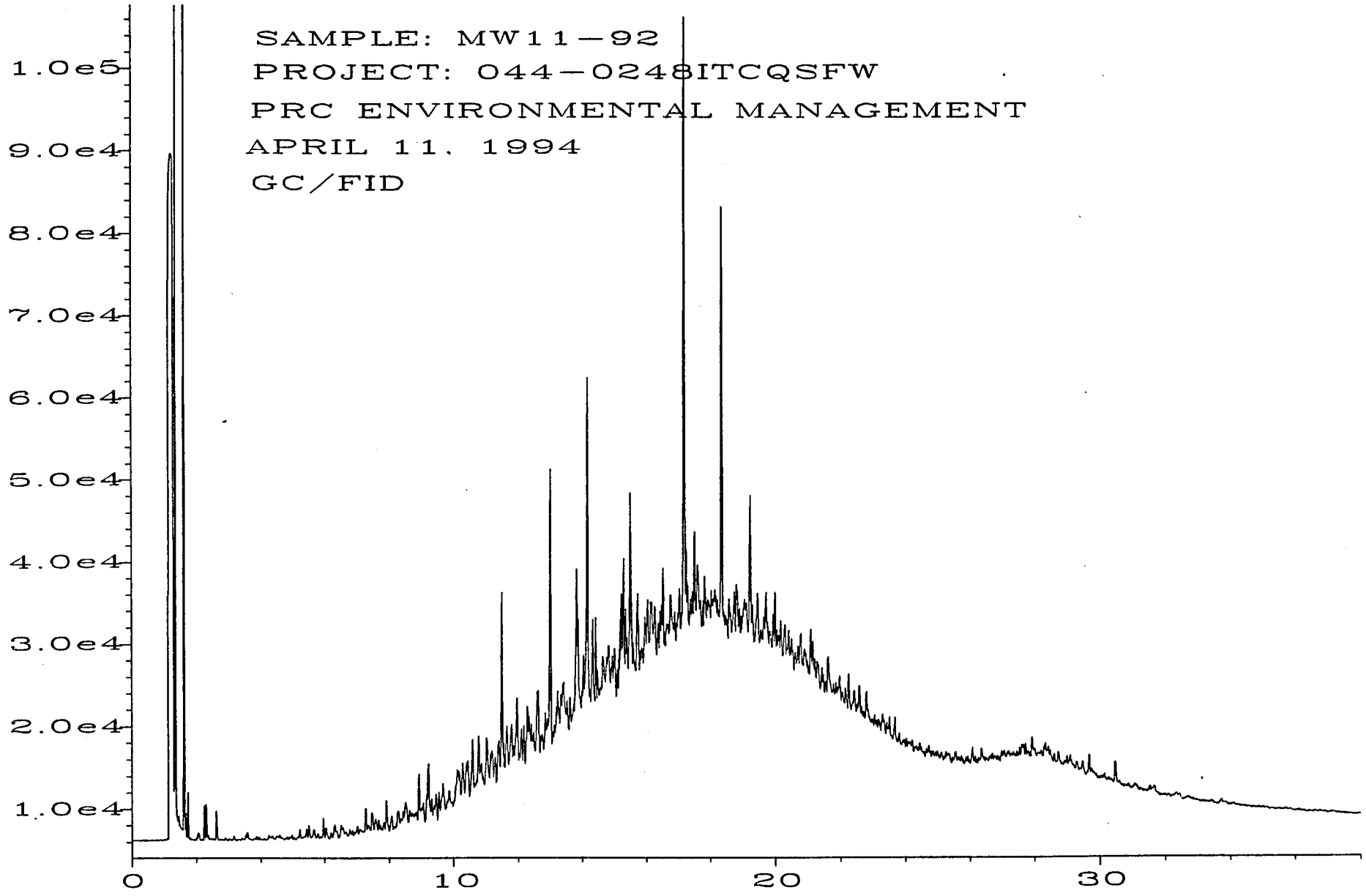

Sig. 1 in C:\HPCHEM\4\DATA\04-11-94.C\012F0901.D

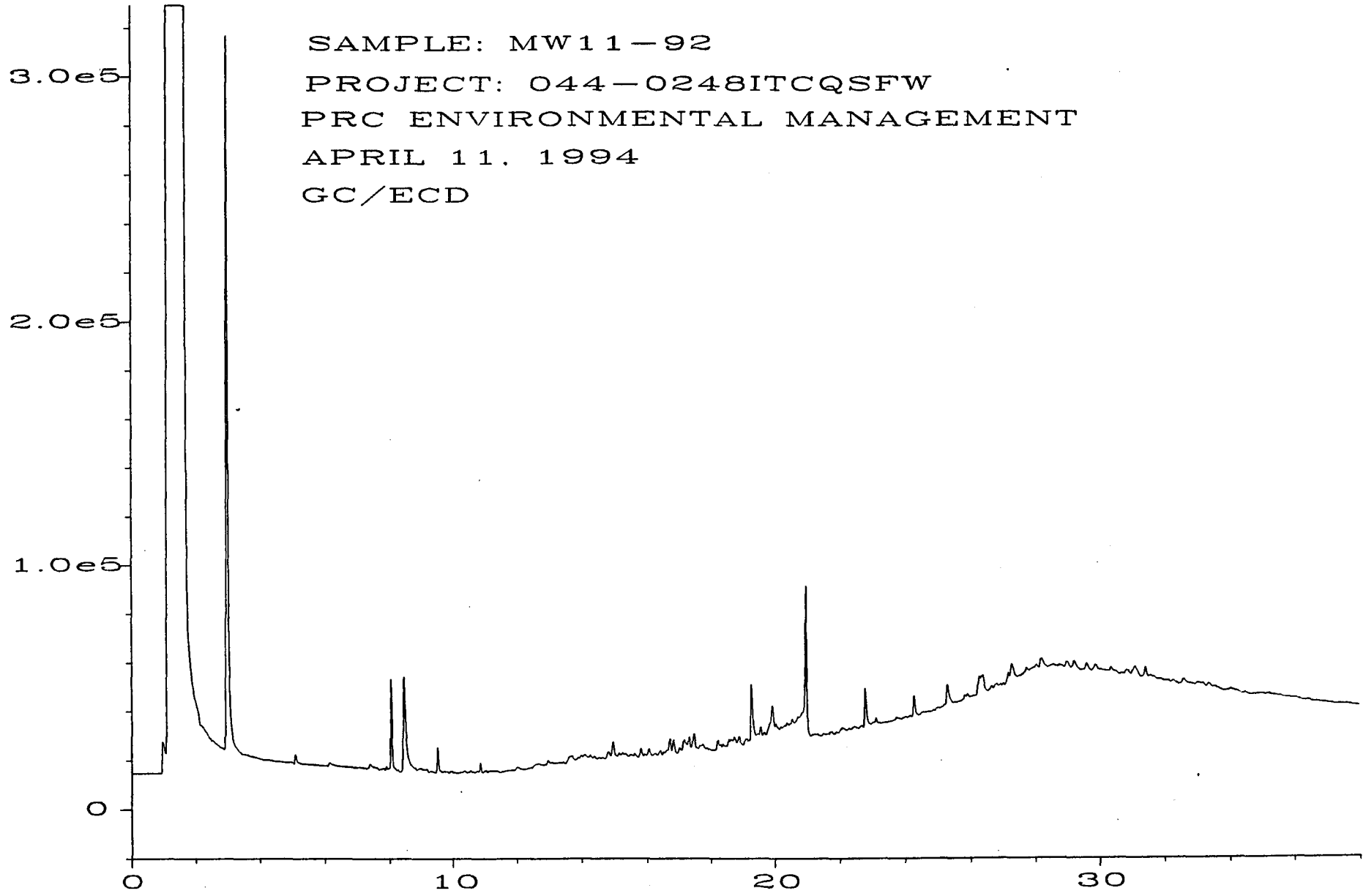

Sig. 2 in C:\HPCHEM\4\DATA\04-11-94.C\012R0901.D

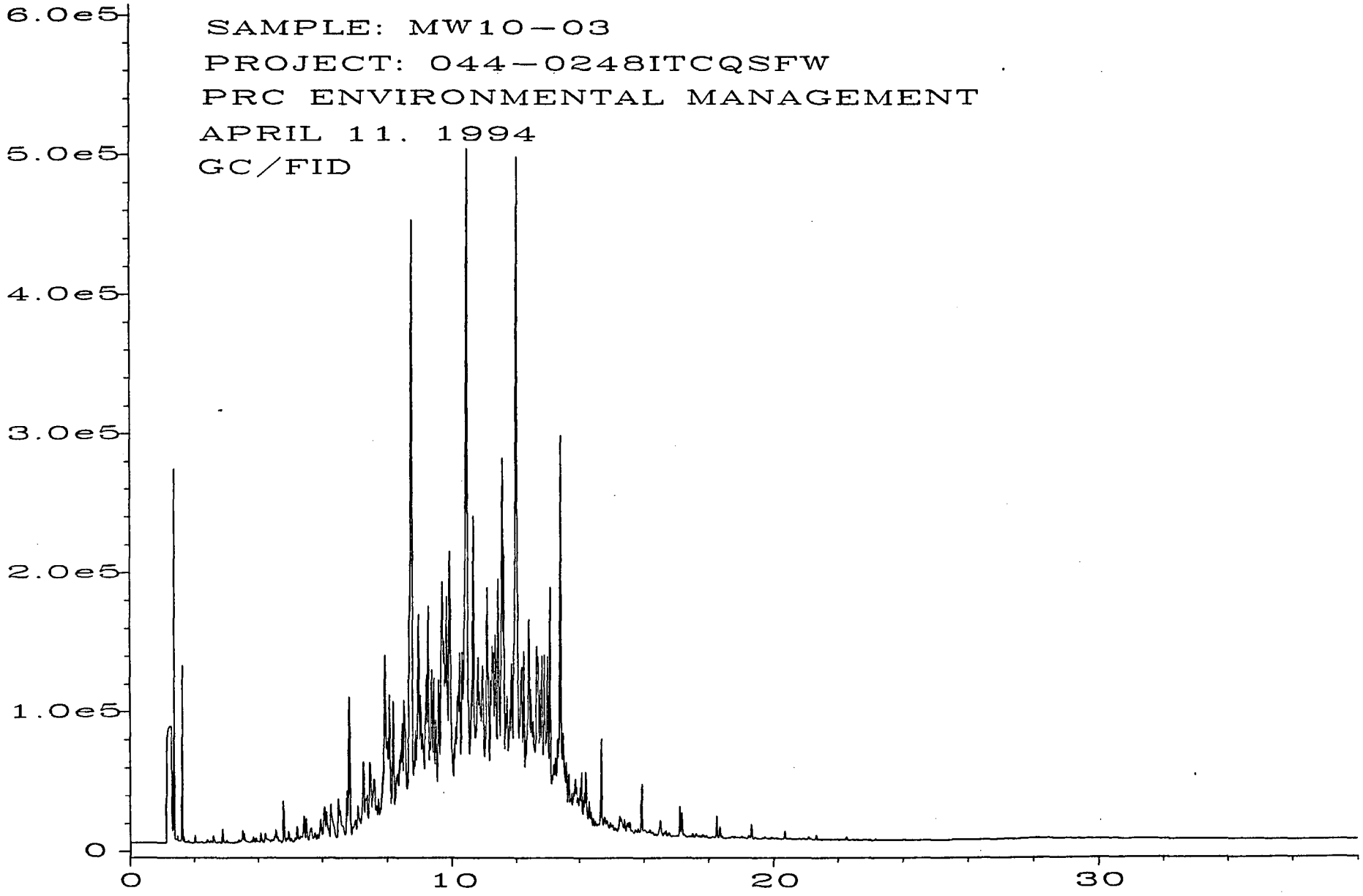

Sig. 1 in C:\HPCHEM\4\DATA\04-11-94.C\013F0901.D

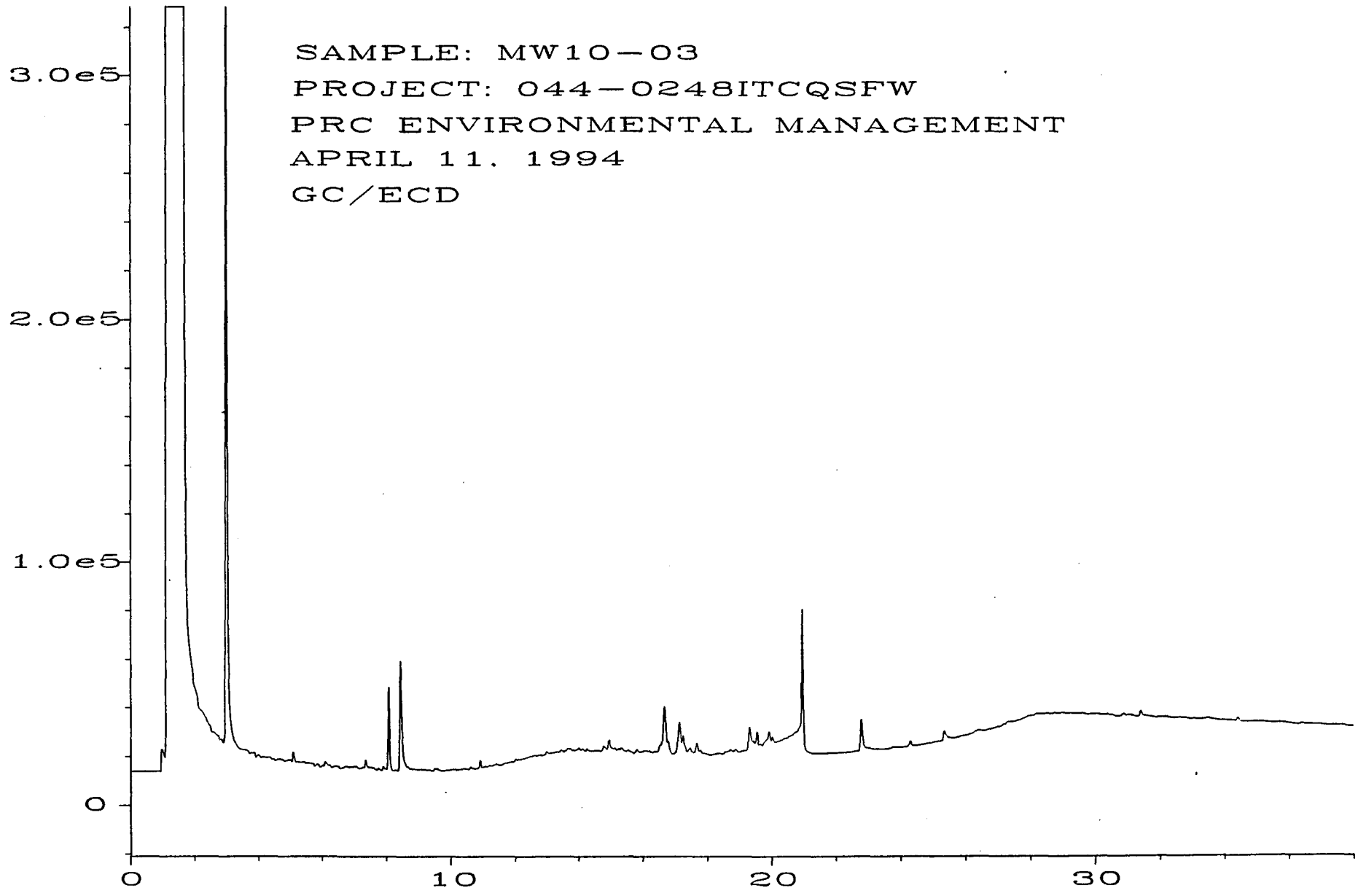

Sig. 2 in C:\HPCHEM\4\DATA\04-11-94.C\013R0901.D

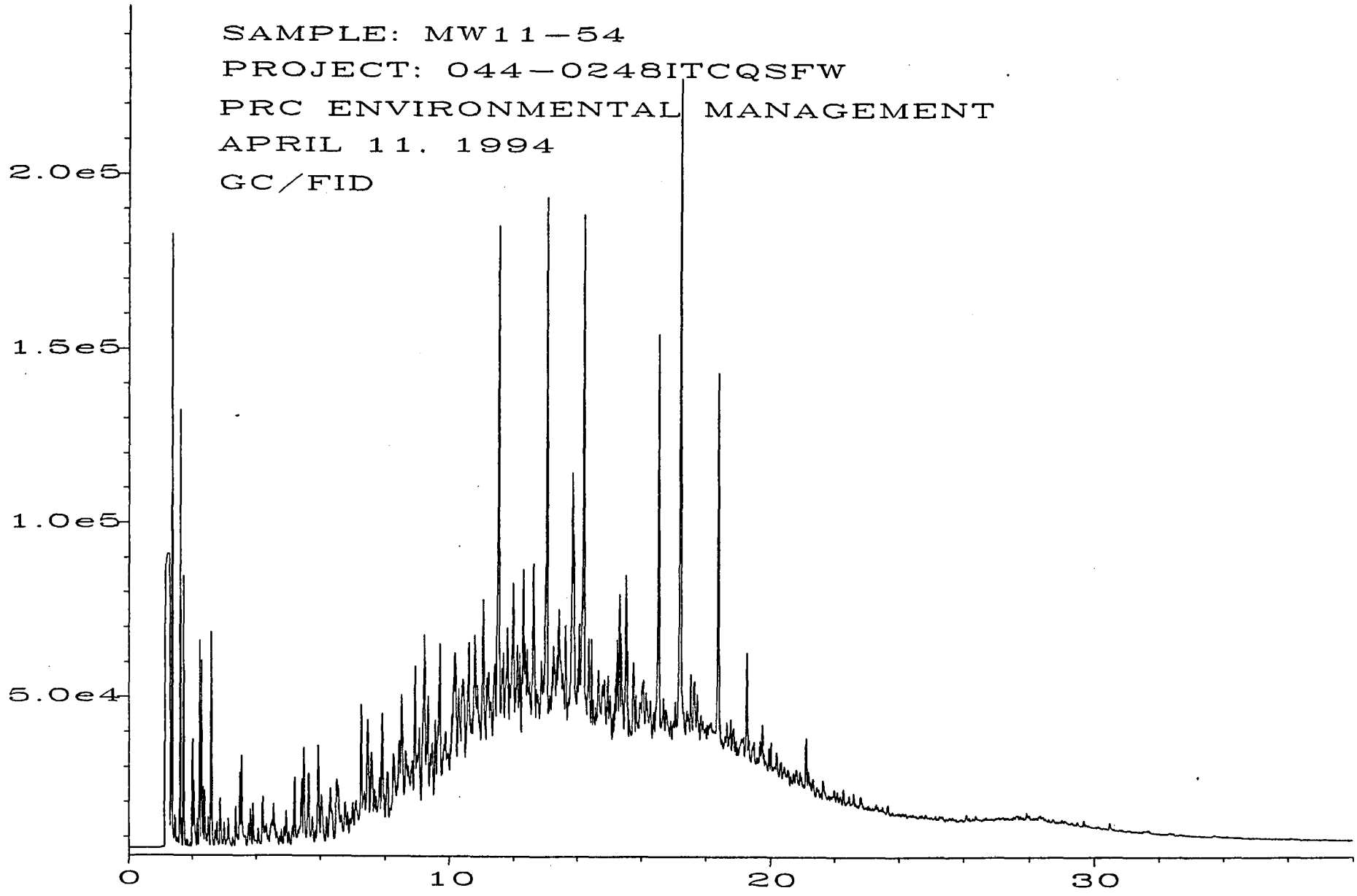

Sig. 1 in C:\HPCHEM\4\DATA\04-11-94.C\014F0901.D

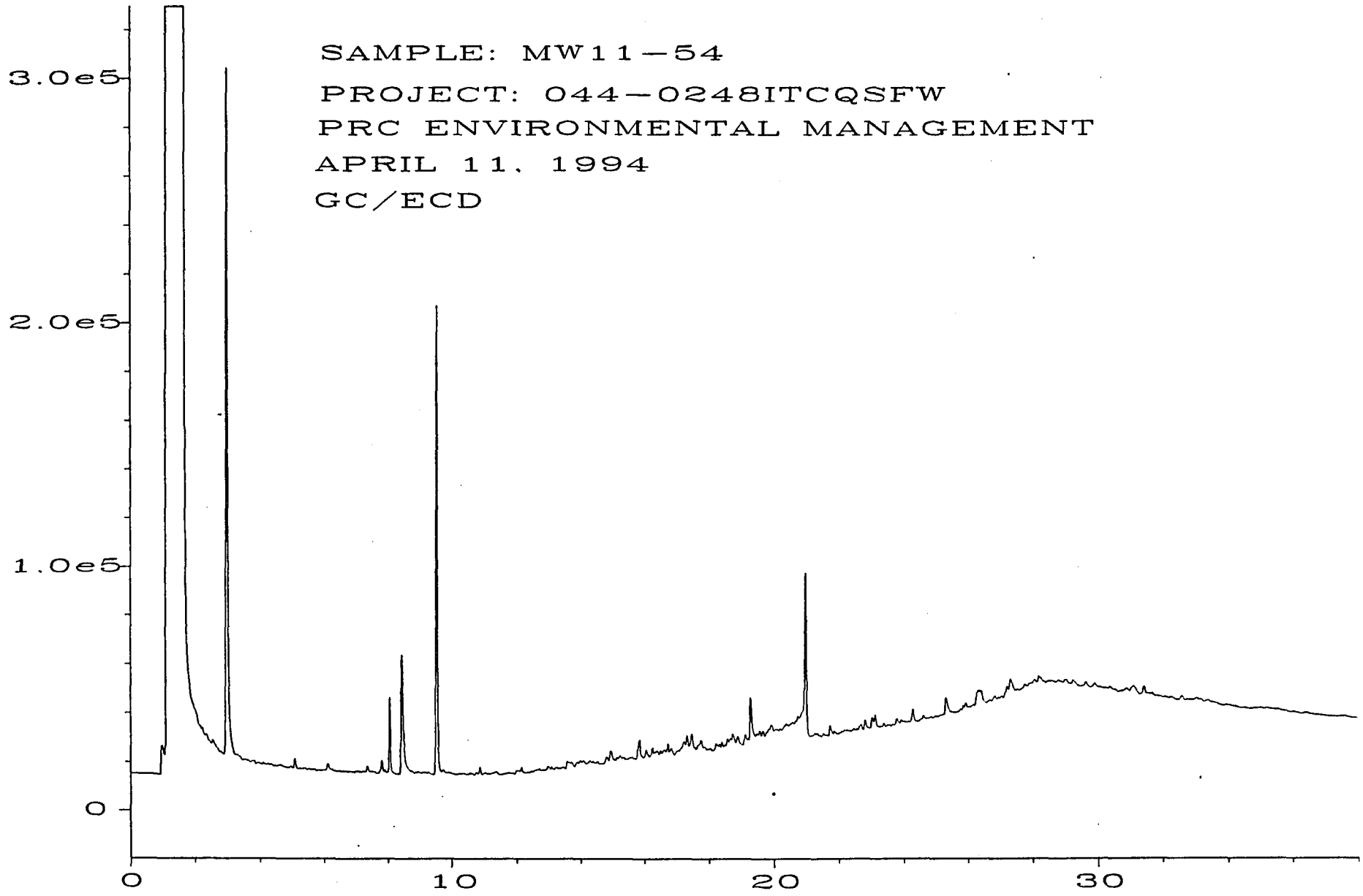

Sig. 2 in C:\HPCHEM\4\DATA\04-11-94.C\014R0901.D

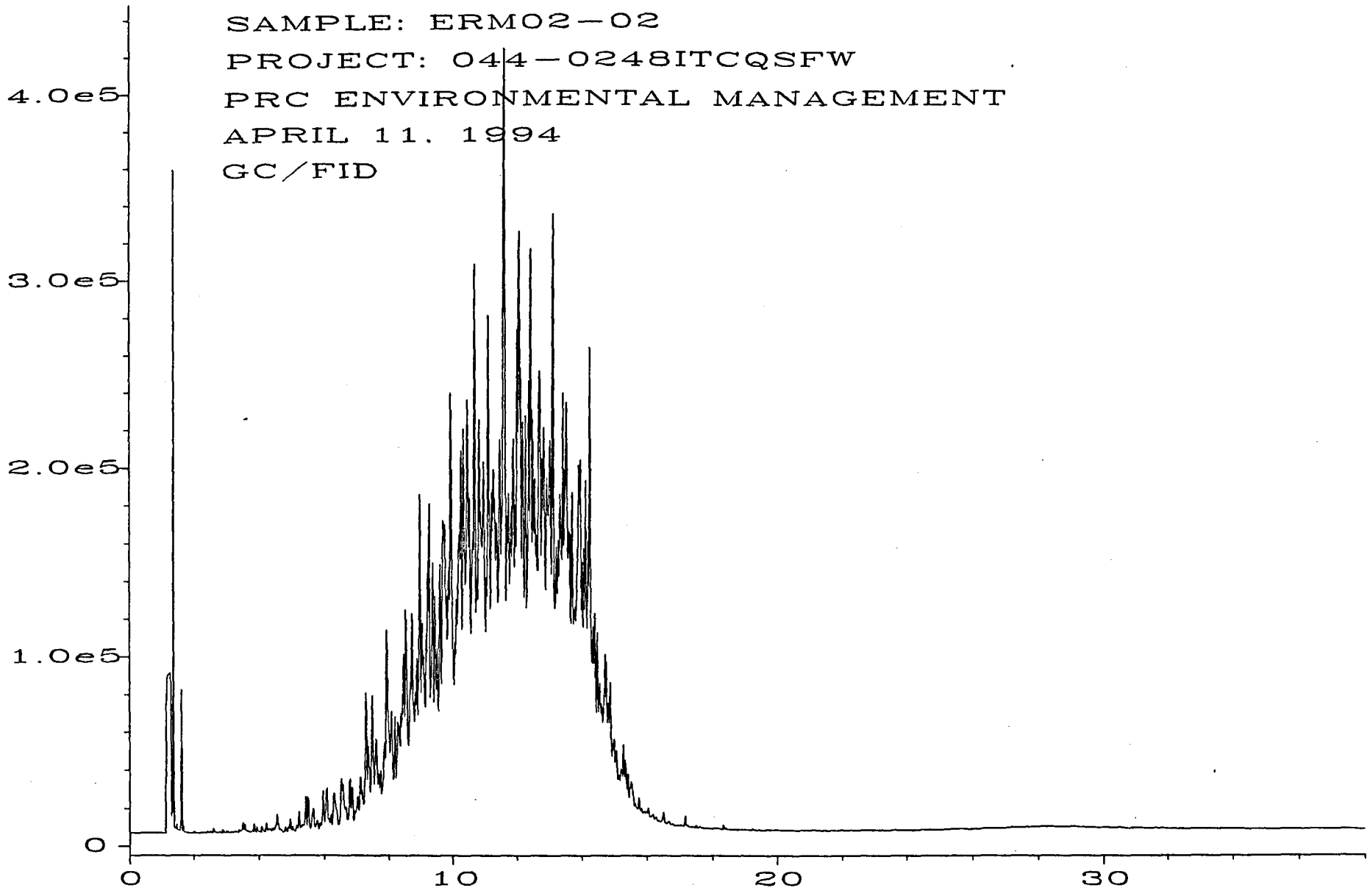

Sig. 1 in C:\HPCHEM\4\DATA\04-11-94.C\015F0901.D

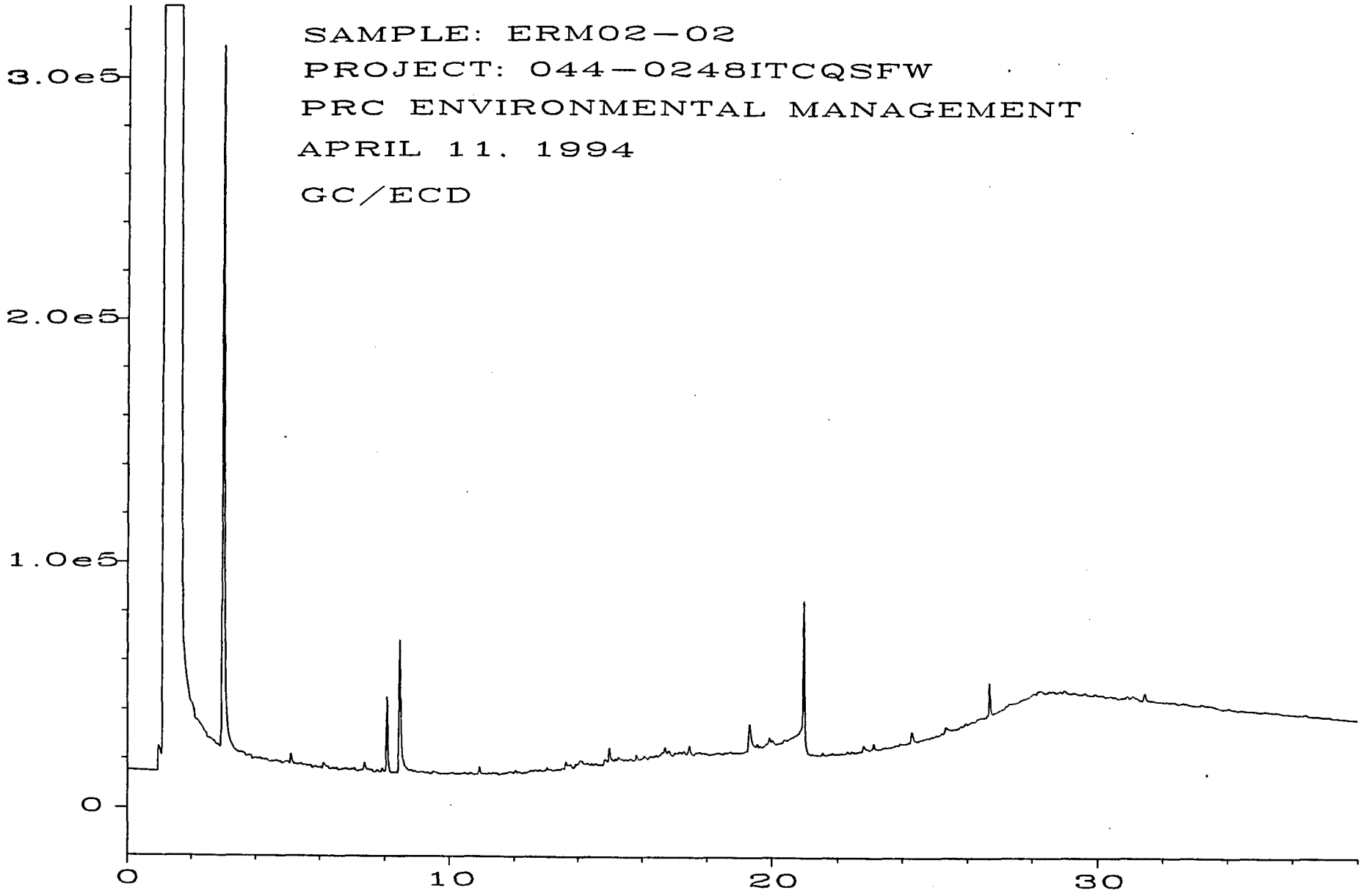

Sig. 2 in C:\HPCHEM\4\DATA\04-11-94.C\015R0901.D

FRIEDMAN & BRUYA, INC.

ENVIRONMENTAL CHEMISTS

Andrew John Friedman
James E. Bruya, Ph.D.
(206) 285-8282

3012 16th Avenue West
Seattle, WA 98119-2029
FAX: (206) 283-5044

June 17, 1994

INVOICE # 94PRC0617-1

PRC Environmental Management Inc.
120 Howard Street, Suite 700
San Francisco, CA 94105

RE: Project 044-0248-IRQSFW, PO #16838: Results of testing requested by Dave West, Project Leader for material submitted on April 1, 1994.

5 product samples characterized by capillary gas chromatography @ $100 per sample	$ 500.00
5 product samples analyzed for Specific Gravity @ $25 per sample	125.00
5 product samples analyzed for Viscosity @ $35 per sample	175.00
5 product samples analyzed for Benzene, Toluene, Ethylbenzene and Xylenes @ $150 per sample	750.00
5 product samples analyzed for Organic Lead @ $35 per sample	175.00
5 product samples analyzed for Total Lead @ $35 per sample	175.00
5 soil sample characterized for distillation range @ $125 per sample	625.00
5 product samples analyzed for Polynuclear Aromatic Hydrocarbons by GC/MS @ $200 per sample	1,000.00
Amount Due	$ 3,525.00

APPENDIX D

DATA VALIDATION REPORTS

TerraWest Environmental Services
Cursory Validation Report

1.0 QA/QC DATA REVIEW SUMMARY

Site:	Point Molate
Laboratory:	ETC/Mid-Pacific
QA Reviewer/Firm:	EJN / TerraWest
Review Date:	6/06/94
SDG Number:	U3102
CTO Number:	0248
Sample Number(s):	MW10-14 (19.0), MW11-08 (22.0), MW11-02 (26.0), MW10-10 (21.0), MW10-04 (21.0), MW10-97 (21.0), MW10-12 (18.0), TB11-02, MW11-55 (23.0), EB11-01, MW10-08 (24.0), MW10-05 (19.0), EB00-02, MW11-19 (23.0), TB10-01, TB10-02, MW10-98 (19.0), EB00-01, MW10-09 (19.0), MW11-05 (22.0), TB11-01 and GS02-01.
Collection Dates:	
Analyses:	CLP VOA, CLP SVOA, CLP Pesticides/PCB's, CLP Metals, TPH Purgeable, TPH Extractable.
QC Criteria Reviewed:	CLP Organic: Holding times from date of collection; initial and continuing calibrations; field, method, and instrument blanks; surrogate recoveries; laboratory control samples; matrix spike/matrix spike duplicate analyses; internal standard performance; and overall assessment for the SDG. CLP Inorganic: Holding times from date of collection; initial and continuing calibrations; field, preparation, and calibration blanks; laboratory control samples; duplicate sample analysis; matrix spike analysis; ICP serial dilution; and overall assessment for the SDG. Non-CLP: Method compliance; Holding times from date of collection; initial and continuing calibrations; field and laboratory blanks; surrogate recoveries; laboratory control samples; duplicate sample analysis; matrix spike accuracy and precision; other method specific QC; and overall assessment for the SDG.

1.0 QA/QC DATA REVIEW SUMMARY (Continued)

Site:	Point Molate
Laboratory:	ETC/Mid-Pacific
Sample Delivery Group	U3102
QA Reviewer/Firm:	EJN / TerraWest
Review Date:	6/06/94

Data were qualified according to the following EPA documents:

- **Laboratory Data Validation Functional Guidelines for Evaluating Organic Analyses.**
  Office of Emergency and Remedial Response. Washington, DC.
- **National Functional Guidelines for Organic Data Review.**
  Multi-Media, Multi-Concentration (OLMO1.0-OLMO1.8) and Low Concentration Water (OLCO1.0), Draft. December 1990, Revised June 1991
- **Laboratory Data Validation Functional Guidelines for Evaluating Inorganic Analyses.**
  Office of Emergency and Remedial Response. Washington, DC.
- **PRC NAVY CLEAN SOW (1991)**
- **And other specified criteria in EPA methods**

1.0 QA/QC DATA REVIEW SUMMARY (Continued)

Site:	Point Molate
Laboratory:	ETC/Mid-Pacific
Sample Delivery Group	U3102
QA Reviewer/Firm:	EJN / TerraWest
Review Date:	6/06/94

Comments:

1. **Holding Times:**

A. Due to samples analyzed past holding time, the following samples were qualified as estimated (J-H/UJ-H):

- TPH-Diesel:

  GS02-01, MW10-10 (21.0), EB11-01, MW10-04 (21.0), MW10-08 (24.0), MW10-09 (19.0), MW10-97 (21.0), MW10-05 (19.0) and MW10-98 (19.0)

2. **Blank Contamination:**

A. Due to blank contamination, the results for the following analytes are qualified non-detected (U-B/UJ-B):

- Methylene chloride in samples MW10-14 (19.0), MW11-02 (26.0), MW10-10 (21.0), MW10-97 (21.0) and MW10-12 (18.0)
- Benzene in samples MW10-10 (21.0) and MW11-55 (23.0)
- Acetone in samples MW10-04 (21.0) and MW10-97 (21.0)
- Xylene in samples MW11-55 (23.0) and EB00-01
- bis(2-Ethylhexyl)phthalate in samples MW11-08 (22.0), MW11-02 (26.0)MW10-04 (21.0), MW10-97 (21.0), MW10-12 (18.0), MW11-55 (23.0), MW10-05 (19.0), MW11-19 (23.0) and EB00-01
- Di-n-butylphthalate in samples MW11-02 (26.0), MW10-04 (21.0) and MW10-97 (21.0)
- Butylbenzylphthalate in samples MW10-05 (19.0) and MW11-19 (23.0)
- Diethylphthalate in sample EB00-02
- Aluminum in samples MW10-04 (21.0), MW10-05 (19.0)D, MW10-08 (23.0)D, MW10-09 (19.0)D, MW10-12 (18.0)D, MW10-14 (19.0)D, MW10-98 (19.0)D, MW11-02 (26.0)D, MW11-05 (22.0)D MW11-09 (22.0)D and MW11-19 (23.0)D
- Mercury in samples MW10-04 (21.0)D, MW10-08 (24.0)D, MW10-10 (21.0)D, MW10-12 (18.0)D, MW10-14 (19.0)D, MW11-02 (26.0)D, MW11-05 (22.0)D, MW11-08 (22.0)D, MW11-19 (23.0)D, MW11-55 (23.0)D, MW10-04 (21.0)T, MW10-05 (19.0)T, MW10-09 (19.0)T, MW10-10 (21.0)T, MW10-12 (18.0)T, MW10-97 (21.0)T, MW10-98 (19.0)T, MW11-02 (26.0)T, MW11-05 (22.0)T, MW11-08 (22.0)T, MW11-19 (23.0)T and MW11-55 (23.0)T
- Arsenic in samples MW10-08 (24.0)D, MW10-09 (19.0)D, MW10-10 (21.0)D, MW10-12 (18.0)D, MW10-98 (19.0)D, MW11-05 (22.0)D, MW11-55 (23.0)D, MW10-04 (21.0)T, MW10-05 (19.0)T, MW10-08 (24.0)T, MW10-09 (19.0)T, MW10-10 (21.0)T, MW10-12 (18.0)T, MW10-97 (21.0)T, MW10-98 (19.0)T, MW11-05 (22.0)T, MW11-19 (23.0)T and MW11-55 (23.0)T
- Potassium in samples MW10-08 (24.0)D, MW10-09 (19.0)D, MW10-10 (21.0)D, MW10-12 (18.0)D, MW10-14 (19.0)D, MW11-05 (22.0)D, MW10-08 (24.0)T, MW10-09 (19.0)T, MW10-10 (21.0)T, MW10-12 (18.0)T, MW10-14 (19.0)T, MW10-98 (19.0)T, MW11-02 (26.0) and MW11-05 (22.0)T
- Zinc in samples MW10-05 (19.0)T, MW10-08 (24.0)T, MW10-09 (19.0)T, MW10-14 (19.0)T, MW10-98 (19.0)T, MW11-02 (26.0)T, MW11-05 (22.0)T and MW11-19 (23.0)T

1.0 QA/QC DATA REVIEW SUMMARY (Continued)

Site:	Point Molate
Laboratory:	ETC/Mid-Pacific
Sample Delivery Group	U3102
QA Reviewer/Firm:	EJN / TerraWest
Review Date:	6/06/94

B. Due to a negative blank contamination, the following analytes are qualified (J-Z/UJ-Z):

- Antimony in samples MW10-04 (21.0)D, MW10-05 (19.0)D, MW10-08 (24.0)D, MW10-09 (19.0)D, MW10-10 (21.0)D, MW10-12 (18.0)D, MW10-14 (19.0)D, MW10-98 (19.0)D, MW11-02 (26.0)D, MW11-05 (22.0)D, MW11-08 (22.0)D, MW11-19 (23.0)D, MW11-55 (23.0)D, MW10-04 (21.0)T, MW10-05 (19.0)T, MW10-08 (24.0)T, MW10-09 (19.0)T, MW10-10 (21.0)T, MW10-12 (18.0)T, MW10-14 (19.0)T, MW10-97 (21.0)T, MW10-98 (19.0)T, MW11-02 (26.0)T, MW11-05 (22.0)T, MW11-08 (22.0)T and MW11-55 (23.0)T
- Silver in samples MW10-04 (21.0)D, MW10-05 (19.0)D, MW10-08 (24.0)D, MW10-09 (19.0)D, MW10-10 (21.0)D, MW10-12 (18.0)D, MW10-14 (19.0)D, MW10-98 (19.0)D, MW11-02 (26.0)D, MW11-05 (22.0)D, MW11-08 (22.0)D, MW11-19 (23.0)D, and MW11-55 (23.0)D. All affected "total" samples were already qualified as unusable (R) due to poor matrix spike recovery.
- Vanadium in samples MW10-04 (21.0)D, MW10-05 (19.0)D, MW10-08 (24.0)D, MW10-09 (19.0)D, MW10-10 (21.0)D, MW10-12 (18.0)D, MW10-14 (19.0)D, MW10-98 (19.0)D, MW11-02 (26.0)D, MW11-05 (22.0)D, MW11-08 (22.0)D, MW11-19 (23.0)D, MW11-55 (23.0)D, MW10-05 (19.0)T, MW10-08 (24.0)T, MW10-09 (19.0)T, MW10-14 (19.0)T, MW10-98 (19.0)T, MW11-02 (26.0)T, MW11-05 (22.0)T, MW11-08 (22.0)T, MW11-19 (23.0)T and MW11-55 (23.0)T

3. Surrogate Recovery:

A. Due to surrogate recovery problems, the following detected and non-detected analytes are considered estimated (J-S/UJ-S):

- All analytes for Pesticide/PCB samples MW10-14 (19.0) and MW10-12 (18.0)
- All detects for volatile sample TB10-01RE
- The percent recoveries for TPH-Extract were extremely high or low in several samples. Because no limits have been established for this surrogate, no further action was taken.

4. Matrix Spike/ Matrix Spike Duplicate

A. Due to the accuracy problems in the inorganic matrix spike, the following detected results are estimated (N) and the non-detected results are estimated (UJ-N):

- Aluminum, selenium and thallium in all total samples

B. Due to matrix spike percent recovery less than 30%, the following non-detected analytes were qualified as unusable (R) and the detects are estimated (J-N):

- Silver in all total samples

1.0 QA/QC DATA REVIEW SUMMARY (Continued)

Site:	Point Molate
Laboratory:	ETC/Mid-Pacific
Sample Delivery Group	U3102
QA Reviewer/Firm:	EJN / TerraWest
Review Date:	6/06/94

C. For the TPH-Purge MS/MSD, the results were reported incorrectly on the form. Changes were made directly on the form and all results were still within QC limits.

No MS/MSD was analyzed for VOA, SVOA, Pesticides/PCBs or TPH-Extract

5. Matrix Duplicates

A. Duplicate sample result for CLP Inorganics water samples are required to be within the control limits of ±20%.

B. The duplicate result for silver (total) was outside the QC limits. The detected results for MW10-14 (19.)T was qualified as estimated (J-*).

C. All other results were already qualified as unusable (R) due to poor matrix spike recovery.

6. Laboratory Control Sample or Blank Spike

A. All LCS and blank spike results for this SDG were within control limits.

B. The LCSD for TPH-Extract showed a low percent recovery and the RPD for the LCS/LCSD was high. No limits were given, therefore, no further action was taken.

7. Calibration

A. Due to initial calibration %RSD greater than 30% or continuing calibration %D greater than 25% (20% and 15% for TPH), the following non-detected/detected results are qualified as estimated (UJ-J/J-K):

- Chloromethane in samples MW10-04 (21.0), MW10-08 (24.0), MW10-05 (19.0) and MW11-19 (23.0)
- Acetone in samples EB11-01, EB00-02 and EB00-01
- 4-chloroaniline in all semi-volatile samples
- 3,3'-Dichlorobenzidine in samples MW10-14 (19.), MW11-08 (22.0), MW11-02 (26.0), MW10-10 (21.0), MW10-12 (18.), MW11-55 (23.0), EB11-01, MW10-08 (24.0), EB00-02. ,W11-19 (23.0), MW10-98 (19.0), EB00-01, MW10-09 (19.0) and MW11-05 (22.0)
- N-nitrosodiphenylamine in samples MW10-10 (21.0), MW10-04 (21.0), MW10-97 (21.0), EB11-01, MW10-08 (24.0), MW10-05 (19.0), MW10-98 (19.0) and MW10-09 (19.0)

1.0 QA/QC DATA REVIEW SUMMARY (Continued)

Site:	Point Molate
Laboratory:	ETC/Mid-Pacific
Sample Delivery Group	U3102
QA Reviewer/Firm:	EJN / TerraWest
Review Date:	6/06/94

8. Internal Standards

A. All internal standard area counts were within QC limits for CLPVOC and CLPSVOC analyses.

- 4-nitroaniline, carbazole and butylbenzylphalate in samples MW10-04 (21.0) and MW10-05 (19.0)
- Carbazole, di-n-butylphthalate, pyrene, butylbenzylphthalate and bis(2-ethylhexyl)phthalate in sample MW10-97 (21.0)
- Weathered diesel and bunker fuel in samples MW10-14 (19.0), MW10-12 (18.0), GS02-01, MW11-05 (22.0), MW11-08 (22.0), MW11-19 (23.0) MW11-02 (26.0) and MW11-55 (23.0)

B. Due to an RF less than the minimum RF, the following non-detected analytes are qualified as unusable (R):

- Bromoform and 1,1,2,2-tetrachloroethene in all volatile samples

9. ICP Serial Dilution

A. All serial dilution (5X) results were within the control limits of ± 10%

10. Case Assessment

A. In general, the data were found to be acceptable and usable as qualified for all purposes, with the following exceptions:

- Due to an RF less than the minimum RF, all volatile samples are qualified as unusable (R) for bromoform and 1,1,2,2-tetrachloroethene.
- Due to poor matrix spike recovery (<30%) silver is qualified as unusable (R) in all total metals samples except MW10-14 (19.0)T.

TerraWest Environmental Services

1.0 QA/QC DATA REVIEW SUMMARY (Continued)

Site:	Point Molate
Laboratory:	ETC/Mid-Pacific
Sample Delivery Group	U3102
QA Reviewer/Firm:	EJN / TerraWest
Review Date:	6/06/94

END OF REPORT

TerraWest Environmental Services
Cursory Validation Report

1.0 QA/QC DATA REVIEW SUMMARY

Site:	Point Molate
Laboratory:	ETC/Mid-Pacific
QA Reviewer/Firm:	Mensik / TerraWest
Review Date:	6/05/94
SDG Number:	U3138
CTO Number:	0248
Sample Number(s):	TB11-03, MW11-13 (26), ERM10-02 (19), ERM10-01 (23), MW11-57 (23), ERM02-02 (14), MW02-99 (14), MW11-95 (19), MW02-01 (24), MW02-04 (29), MW11-92 (19), MW11-21 (22), TB11-04, MW11-93 (22), MW11-56 (22), TB11-05, MW11-40 (17)
Collection Dates:	3/25 THRU 3/31/94
Analyses:	CLP VOA, CLP SVOA, CLP Pesticides/PCB's, CLP Metals, TPH Purgeable, TPH Extractable.
QC Criteria Reviewed:	CLP Organic: Holding times from date of collection; initial and continuing calibrations; field, method, and instrument blanks; surrogate recoveries; laboratory control samples; matrix spike/matrix spike duplicate analyses; internal standard performance; and overall assessment for the SDG. CLP Inorganic: Holding times from date of collection; initial and continuing calibrations; field, preparation, and calibration blanks; laboratory control samples; duplicate sample analysis; matrix spike analysis; ICP serial dilution; and overall assessment for the SDG. Non-CLP: Method compliance; Holding times from date of collection; initial and continuing calibrations; field and laboratory blanks; surrogate recoveries; laboratory control samples; duplicate sample analysis; matrix spike accuracy and precision; other method specific QC; and overall assessment for the SDG.

1.0 QA/QC DATA REVIEW SUMMARY (Continued)

Site:	Point Molate
Laboratory:	ETC/Mid-Pacific
Sample Delivery Group	U3138
QA Reviewer/Firm:	Mensik / TerraWest
Review Date:	6/05/94

Data were qualified according to the following EPA documents:

- **Laboratory Data Validation Functional Guidelines for Evaluating Organic Analyses.** Office of Emergency and Remedial Response. Washington, DC.
- **National Functional Guidelines for Organic Data Review.** Multi-Media, Multi-Concentration (OLMO1.0-OLMO1.8) and Low Concentration Water (OLCO1.0), Draft. December 1990, Revised June 1991
- **Laboratory Data Validation Functional Guidelines for Evaluating Inorganic Analyses.** Office of Emergency and Remedial Response. Washington, DC.
- **PRC NAVY CLEAN SOW (1991)**
- **And other specified criteria in EPA methods**

1.0 QA/QC DATA REVIEW SUMMARY (Continued)

Site:	Point Molate
Laboratory:	ETC/Mid-Pacific
Sample Delivery Group	U3138
QA Reviewer/Firm:	Mensik / TerraWest
Review Date:	6/05/94

Comments:

1. **Holding Times:**

   A. ERM02-02 (14) and MW02-99 (14) were extracted outside the holding time for SVOC and Pest/PCB. Positive results were qualified (J-H), non-detects were qualified (UJ-H).

   B. MW11-13 (26) exceeded H.T. for mercury by one day for digestion and two days for analysis.

2. **Blank Contamination:**

   A. Due to blank contamination, the results for the following analytes are qualified non-detected (U):

   - **CLPVOC**:

     Total xylenes, methylene chloride

   - **SVOC**:

     bis(2-ethylhexyl)phthalate

   - **Pest/PCB**:

     NONE

   - Aluminum, cadmium, calcium, copper, iron, manganese, potassium, silver, sodium, vanadium, zinc if below action level (5X blank result).

3. **Surrogate Recovery:**

   A. Due to surrogate recovery problems, the following detected and non-detected analytes are considered estimated (J-S/UJ-S):

   - **Pest/PCB**:

     ERM02-02 (14), MW02-01 (24) and MW02-99 (14)

1.0 QA/QC DATA REVIEW SUMMARY (Continued)

Site:	Point Molate
Laboratory:	ETC/Mid-Pacific
Sample Delivery Group	U3138
QA Reviewer/Firm:	Mensik / TerraWest
Review Date:	6/05/94

4. **Matrix Spike/ Matrix Spike Duplicate**

   A. Total metals antimony and titanium were qualified)UJ-N); selenium (0.0% recovery) qualified non-detects as unusable.

   B. Dissolved metal titanium qualified (UJ-N); selenium (0.0% recovery) qualified non-detects as unusable.

5. **Matrix Duplicates**

   A. Duplicate sample results for CLP Inorganics water samples are required to be within the control limits of ± 20%.

   B. Total mercury results qualified (J-*) due to 99% RPD.

6. **Laboratory Control Sample or Blank Spike**

   A. All LCS and blank spike results for this SDG were within control limits.

7. **Calibration**

   A. Due to initial calibration %RSD greater than 30% the following non-detected/detected results are qualified as estimated (UJ-K/J-K):

   - Acetone form CC's analyzed 4/07/94 and 4/08/94
   - SVOC:

     Several "poor performers" for all calibration dates and Hexachlorobenzene for 4/25/94 and 4/26/94 CCs.

8. **Internal Standards**

   A. All internal standard area counts were within QC limits for CLPVOC and CLPSVOC analyses.

9. **ICP Serial Dilution**

   A. All serial dilution (5X) results were within the control limits of ± 10%

1.0 QA/QC DATA REVIEW SUMMARY (Continued)

Site:	Point Molate
Laboratory:	ETC/Mid-Pacific
Sample Delivery Group	U3138
QA Reviewer/Firm:	Mensik / TerraWest
Review Date:	6/05/94

10. Case Assessment

A. In general, the data were found to be acceptable and usable as qualified for all purposes, with the following exceptions:

- Pesticides/PCBs exhibited poor surrogate recoveries overall; samples, blanks and LCS. This indicates laboratory-wide difficulties analyzing this method. Although, surrogate limits are only advisory, such system-wide non-compliance requires qualification of some sort. Especially, when it is considered that two of four samples were extracted outside of holding times and MS/MSD were not analyzed. All samples for Pesticides/PCBs have been qualified as (UJ-S), since none of the samples exhibited any detected analytes. The 'H' qualifier was added to samples analyzed outside holding times.

TerraWest Environmental Services

1.0 QA/QC DATA REVIEW SUMMARY (Continued)

Site:	Point Molate
Laboratory:	ETC/Mid-Pacific
Sample Delivery Group	U3138
QA Reviewer/Firm:	Mensik / TerraWest
Review Date:	6/05/94

END OF REPORT

TerraWest Environmental Services
Cursory Validation Report

1.0 QA/QC DATA REVIEW SUMMARY

Site:	Point Molate
Laboratory:	ETC/Mid-Pacific
QA Reviewer/Firm:	EJN / TerraWest
Review Date:	5/27/94
SDG Number:	U3139
CTO Number:	0248
Sample Number(s):	MW10-02 (9), MW11-54 (23), MW11-96 (23) and MW10-11 (21)
Collection Dates:	3/29/94
Analyses:	CLP VOA, CLP SVOA, CLP Pesticides/PCB's, CLP Metals, TPH Purgeable, TPH Extractable.
QC Criteria Reviewed:	CLP Organic: Holding times from date of collection; initial and continuing calibrations; field, method, and instrument blanks; surrogate recoveries; laboratory control samples; matrix spike/matrix spike duplicate analyses; internal standard performance; and overall assessment for the SDG. CLP Inorganic: Holding times from date of collection; initial and continuing calibrations; field, preparation, and calibration blanks; laboratory control samples; duplicate sample analysis; matrix spike analysis; ICP serial dilution; and overall assessment for the SDG. Non-CLP: Method compliance; Holding times from date of collection; initial and continuing calibrations; field and laboratory blanks; surrogate recoveries; laboratory control samples; duplicate sample analysis; matrix spike accuracy and precision; other method specific QC; and overall assessment for the SDG.

1.0 QA/QC DATA REVIEW SUMMARY (Continued)

Site:	Point Molate
Laboratory:	ETC/Mid-Pacific
Sample Delivery Group	U3139
QA Reviewer/Firm:	EJN / TerraWest
Review Date:	5/27/94

Data were qualified according to the following EPA documents:

- **Laboratory Data Validation Functional Guidelines for Evaluating Organic Analyses.** Office of Emergency and Remedial Response. Washington, DC.
- **National Functional Guidelines for Organic Data Review.** Multi-Media, Multi-Concentration (OLMO1.0-OLMO1.8) and Low Concentration Water (OLCO1.0), Draft. December 1990, Revised June 1991
- **Laboratory Data Validation Functional Guidelines for Evaluating Inorganic Analyses.** Office of Emergency and Remedial Response. Washington, DC.
- **PRC NAVY CLEAN SOW (1991)**
- **And other specified criteria in EPA methods**

1.0 QA/QC DATA REVIEW SUMMARY (Continued)

Site:	Point Molate
Laboratory:	ETC/Mid-Pacific
Sample Delivery Group	U3139
QA Reviewer/Firm:	EJN / TerraWest
Review Date:	5/27/94

Comments:

1. **Holding Times:**

   A. All samples in this SDG were analyzed within holding times.

2. **Blank Contamination:**

   A. Due to blank contamination, the results for the following analytes are qualified non-detected (U-B/UJ/B):

   - Bis(2-ethylhexyl)phthalate in samples MW11-54 (23) and MW11-96 (23)
   - Xylene in sample MW10-11 (21)
   - Aluminum in samples MW10-11 (21)D, MW11-54 (23)D and MW11-96 (23)D
   - Iron in sample MW10-11 (21)D
   - Potassium in sample MW10-11 (21)D
   - Zinc in samples MW10-11 (21)D, MW11-54 (23)D, MW11-96 (23)D, MW11-54 (23)T and MW11-96 (23)T
   - Mercury in samples MW11-54 (23)D, MW11-96 923)D and MW10-11 (21)T

   B. Due to a negative blank contamination, the following analytes are qualified (U-Z/UJ-Z):

   - Cadmium in sample MW11-96 (23)D
   - Chromium, cobalt and lead in sample MW10-11 (21)T

3. **Surrogate Recovery:**

   A. Due to surrogate recovery problems, the following detected and non-detected analytes are considered estimated (J/UJ):

   - All Pesticide/PCB analytes for sample MW10-11 (21)

4. **Matrix Spike/ Matrix Spike Duplicate**

   A. The MS and MSD percent recoveries were above the QC limit for 4-nitrophenol and pentachlorophenol. No further action was taken.

   B. Due to accuracy problems in the inorganic matrix spike, the following detected and non-detected analytes are qualified as estimated:

   - Thallium in samples MW10-11 (21)T, MW11-54 (23)T and MW11-96 (23)T

1.0 QA/QC DATA REVIEW SUMMARY (Continued)

Site:	Point Molate
Laboratory:	ETC/Mid-Pacific
Sample Delivery Group	U3139
QA Reviewer/Firm:	EJN / TerraWest
Review Date:	5/27/94

5. **Matrix Duplicates**

   A. Duplicate sample results for CLP Inorganics water samples are required to be within the control limits of ±20%.

   B. Due to duplicate RPDs greater than ±20%, the following analytes are qualified as estimated (J-*):

   - Aluminum in samples MW10-11 (21)T, MW11-54 (23)T and MW11-96 (23)T

6. **Laboratory Control Sample or Blank Spike**

   A. The blank spike result for 4-nitrophenol was above the QC limit at 88%. No further action was taken.

7. **Calibration**

   A. Due to initial calibration %RSD greater than 30% and continuing calibration %D greater than 25%, the following non-detected/detected results are qualified as estimated (UJ-K/J-K):

   - Acetone in samples MW11-54 (23) and MW11-96 (23)
   - 4-chloroaniline, 4-nitroaniline, n-nitrosodiphenylamine, carbazole and butylbenzylphthalate in sample MW11-54 (23)
   - 4-chloroaniline, n-nitrosodiphenylamine, carbazole, di-n-butylphthalate, pyrene, butylbenzylphthalate and bis(2-ethylhexyl)phthalate in samples MW11-96 (23) and MW10-11 (21)

   B. Due to an RF less than the minimum RF, bromoform and 1,1,2,2-tetrachloroethene were qualified as unusable (R) in samples MW11-54 (23), MW11-96 (23) and MW10-11 (21)

8. **Internal Standards**

   A. All internal standard area counts were within QC limits for CLPVOC and CLPSVOC analyses.

9. **ICP Serial Dilution**

   A. All serial dilution (5X) results were within the control limits of ± 10%

1.0 QA/QC DATA REVIEW SUMMARY (Continued)

Site:	Point Molate
Laboratory:	ETC/Mid-Pacific
Sample Delivery Group	U3139
QA Reviewer/Firm:	EJN / TerraWest
Review Date:	5/27/94

10. Case Assessment

A. In general, the data were found to be acceptable and usable as qualified for all purposes, with the following exceptions:

- Due to an RF less than the minimum RF, bromoform and 1,1,2,2-tetrachloroethene were qualified a unusable (R) in samples MW11-54 (23) MW11-96 (23) and MW10-11 (21)

TerraWest Environmental Services

1.0 QA/QC DATA REVIEW SUMMARY (Continued)

Site:	Point Molate
Laboratory:	ETC/Mid-Pacific
Sample Delivery Group	U3139
QA Reviewer/Firm:	EJN / TerraWest
Review Date:	5/27/94

END OF REPORT

APPENDIX E

MONITORING WELL INSTALLATION RECORDS

PRC
ENVIRONMENTAL MANAGEMENT, INC.

MONITORING WELL INSTALLATION RECORD
FLUSH MOUNT INSTALLATION

WELL LOCATION INFORMATION

WELL NO. **MW10-02**
BOREHOLE NO. SB10-02
SITE NFD POINT MOLATE
SUBSITE AREA 10 - SHORELINE
DATE 02-01-94
RECORDED BY B. DeANGELIS
WELL PERMIT NO.

SURFACE COMPLETION INFORMATION

TYPE OF INSTALLATION
- ☐ OPEN HOLE
- ☒ INSIDE HOLLOW STEM AUGER

TYPE OF FLUSH MOUNT
- ☒ CHRISTY BOX
- ☐
- ☐ LOCKING COVER
- ☐ WATERTIGHT CAP
- ☒ LOCKING CAP

SURFACE SEAL
- ☐ NON-SHRINKING CEMENT
- ☐ CONCRETE
- ☒ QUIKCRETE
- ☐ CHECKED FOR SETTLEMENT
- ☐ INTERNAL MORTAR ADDED

GROUND SURFACE ELEVATION
- ☐ SURVEYED
  DATE MAY 24 & 25 1994

MEASURING POINT
- ☒ TOP OF WELL CASING
- ☐ GROUND SURFACE
- ☐

DRILLING INFORMATION

DRILLING COMPANY/PERSONNEL
BAYLAND DRILLING CO.
KURT VOSS
JOHN MARTING

DRILL RIG CME 75

DRILLING METHOD
- ☒ HOLLOWSTEM AUGER
- ☐ AIR ROTARY
- ☐ MUD/WATER ROTARY
- ☐

DRILLING BEGAN
DATE 02-01-94 TIME 07:40

WELL COMPLETION BEGAN
DATE 02-03-94 TIME 08:10

WELL COMPLETION FINISHED
DATE 02-03-94 TIME 08:50

DRILLING FLUID TYPE
- ☐ BENTONITE ☐ WATER
- ☐ POLYMER ☒ NONE

DRILLING FLUID LOSS
- ☐ YES GALLONS
- ☒ NO

WATER ADDED DURING COMPLETION
- ☐ GALLONS
- ☒ NO

TOTAL FLUID LOSS TO FORMATION
GALLONS

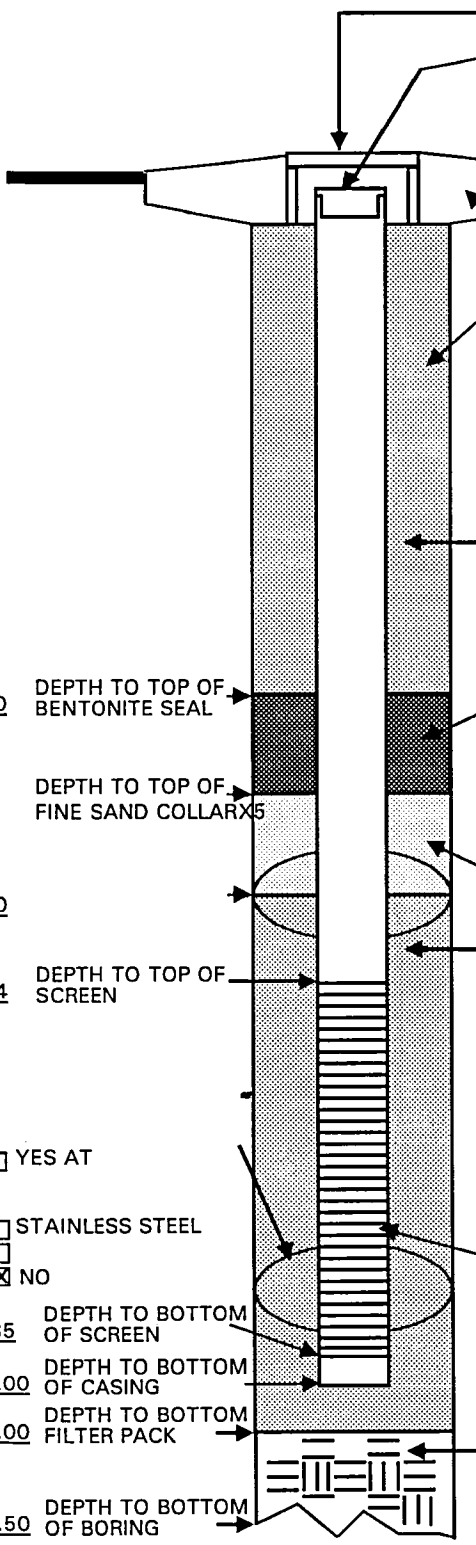

DEPTH TO TOP OF GROUT
- ☐ GROUT FORMULA (PROPORTION OF EACH)
  CEMENT BENTONITE
  WATER OTHER
  QUANTITY USED
- ☒ PREPARED MIX
  NAME OF PRODUCT HIGH SOLIDS
  MANUFACTURED BY VOLCLAY
  QUANTITY USED 1/5 50-LB BAG

TYPE OF CASING
- ☐ STAINLESS STEEL
- ☒ SCHEDULE 40 PVC
- ☐ SCHEDULE 80 PVC
- ☐

CASING DIAMETER
INSIDE 4-INCH
OUTSIDE 4.5-INC

MANUFACTURED BY TRILOC

BENTONITE SEAL
- ☒ PELLETS ☐ SLURRY
- ☐ POWDER/GRANULAR ☐
- QUANTITY USED 1.5 5-GAL BUCKETS

METHOD INSTALLED
- ☐ TREMIE ☐
- ☒ POURED ☐ NOT USED

FINE SAND COLLAR (OPTIONAL)
SIZE / TYPE

FILTER PACK
GRAVEL SIZE ; TO FT.
SAND SIZE ; 2.70 TO 10.00 FT.
QUANTITY USED 2.5 100-LB BAGS
FORMATION COLLAPSE; TO FT.
MATERIAL RMC LONESTAR #3

METHOD INSTALLED
- ☐ TREMIE
- ☒ POURED
- ☐

GRAIN SIZE TESTS FOR FILTER PACK
- ☐ CONDUCTED; FOR REPORT, REFER TO
- ☒ NOT CONDUCTED

TYPE OF SCREEN
- ☐ STAINLESS STEEL
- ☒ SCHEDULE 40 PVC
- ☐ SCHEDULE 80 PVC
- ☐

SCREEN DIAMETER
INSIDE 4-INCH
OUTSIDE 4.5-INC

SLOT SIZE 0.02-INCH (20 SLOT)
MANUFACTURED BY TRILOC

BACKFILL MATERIAL
- ☐ GRAVEL ☒ FORMATION COLLAPSE
- ☐ BENTONITE MATERIAL FILL MATERIAL
- ☐ SAND
- ☐

☐ YES AT

☐ STAINLESS STEEL
☐
☒ NO

TOTAL LENGTH OF CASING AND SCREEN 10.36

DEPTH TO WATER FOLLOWING INSTALLATION (TOC) 7.60

DIAMETER OF BOREHOLE 10-INCH

NOTES:
1. SCALE: NONE
2. RECORD DEPTHS/LENGTHS IN TENTHS OF FEET, NOT IN INCHES
3. RECORD CONSTRUCTION DEPTHS BELOW GROUND LEVEL

C:\FORMS\PM_FSHIN.FRM mjb 09-04-92

PRC
ENVIRONMENTAL MANAGEMENT, INC.

MONITORING WELL INSTALLATION RECORD
FLUSH MOUNT INSTALLATION

WELL LOCATION INFORMATION

WELL NO. **MW10-03**
BOREHOLE NO. SB10-03
SITE NFD POINT MOLATE
SUBSITE AREA 10 - SHORELINE
DATE 02-01-94
RECORDED BY B. DeANGELIS
WELL PERMIT NO.

SURFACE COMPLETION INFORMATION

TYPE OF INSTALLATION
- ☐ OPEN HOLE
- ☒ INSIDE HOLLOW STEM AUGER

TYPE OF FLUSH MOUNT
- ☒ CHRISTY BOX
- ☐
- ☐ LOCKING COVER
- ☐ WATERTIGHT CAP
- ☒ LOCKING CAP

SURFACE SEAL
- ☐ NON-SHRINKING CEMENT
- ☐ CONCRETE
- ☒ QUIKCRETE
- ☐ CHECKED FOR SETTLEMENT
- ☐ INTERNAL MORTAR ADDED

GROUND SURFACE ELEVATION
- ☒ SURVEYED
  DATE MAY 24&25 1994

MEASURING POINT
- ☒ TOP OF WELL CASING
- ☐ GROUND SURFACE
- ☐

DRILLING INFORMATION

DRILLING COMPANY/PERSONNEL
BAYLAND DRILLING CO.
KURT VOSS
JOHN MARTING

DRILL RIG CME 75

DRILLING METHOD
- ☒ HOLLOWSTEM AUGER
- ☐ AIR ROTARY
- ☐ MUD/WATER ROTARY
- ☐

DRILLING BEGAN
DATE 02-01-94 TIME 10:50

WELL COMPLETION BEGAN
DATE 02-01-94 TIME 13:35

WELL COMPLETION FINISHED
DATE 02-01-94 TIME 15:05

DRILLING FLUID TYPE
- ☐ BENTONITE ☐ WATER
- ☐ POLYMER ☒ NONE

DRILLING FLUID LOSS
- ☐ YES GALLONS
- ☒ NO

WATER ADDED DURING COMPLETION
- ☐ YES GALLONS
- ☒ NO

TOTAL FLUID LOSS TO FORMATION
GALLONS

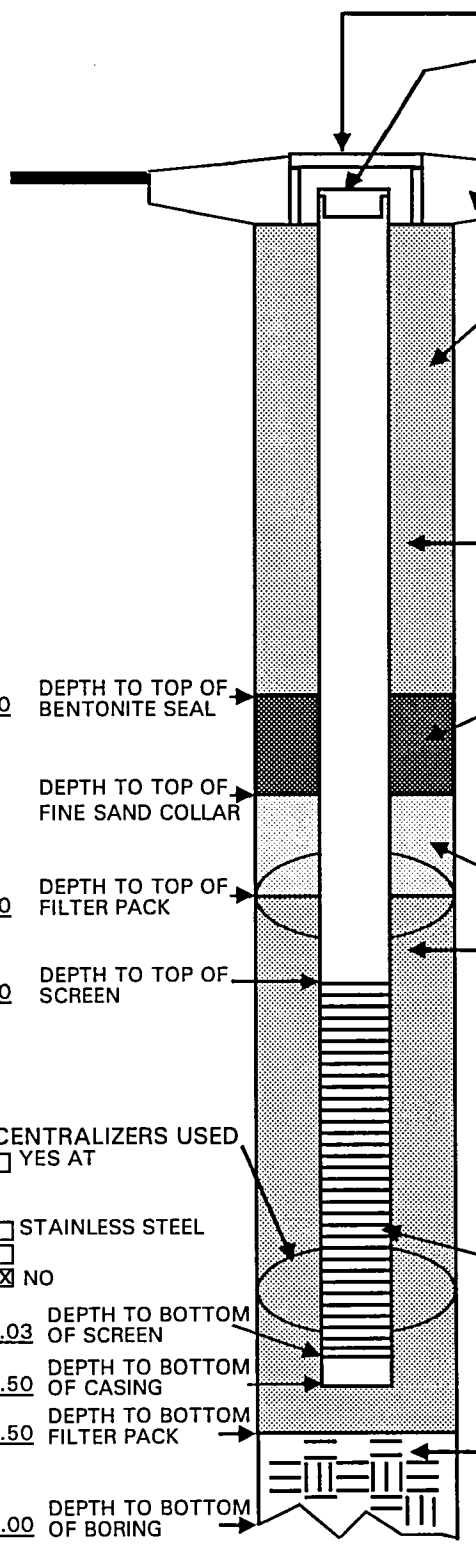

DEPTH TO TOP OF GROUT
- ☐ GROUT FORMULA (PROPORTION OF EACH)
  CEMENT BENTONITE
  WATER OTHER
  QUANTITY USED
- ☒ PREPARED MIX
  NAME OF PRODUCT HIGH SOLIDS
  MANUFACTURED BY VOLCLAY
  QUANTITY USED 1/2 50-LB BAG

TYPE OF CASING
- ☐ STAINLESS STEEL
- ☒ SCHEDULE 40 PVC
- ☐ SCHEDULE 80 PVC
- ☐

CASING DIAMETER
INSIDE 4-INCH
OUTSIDE 4.5-INC

MANUFACTURED BY TRILOC

BENTONITE SEAL
- ☒ PELLETS ☐ SLURRY
- ☐ POWDER/GRANULAR ☐
- QUANTITY USED 1.5 5-GAL BUCKETS

METHOD INSTALLED
- ☐ TREMIE ☐
- ☒ POURED ☐ NOT USED

FINE SAND COLLAR (OPTIONAL)
SIZE / TYPE

FILTER PACK
GRAVEL SIZE ; TO FT.
SAND SIZE ; 7.50 TO 19.50 FT.
QUANTITY USED 5.5 100-LB BAGS
FORMATION COLLAPSE; TO FT.
MATERIAL RMC LONESTAR #3

METHOD INSTALLED
- ☐ TREMIE
- ☒ POURED
- ☐

GRAIN SIZE TESTS FOR FILTER PACK
- ☐ CONDUCTED; FOR REPORT, REFER TO
- ☒ NOT CONDUCTED

CENTRALIZERS USED
- ☐ YES AT
- ☐ STAINLESS STEEL
- ☐
- ☒ NO

TYPE OF SCREEN
- ☐ STAINLESS STEEL
- ☒ SCHEDULE 40 PVC
- ☐ SCHEDULE 80 PVC
- ☐

SCREEN DIAMETER
INSIDE 4-INCH
OUTSIDE 4.5-=IN

SLOT SIZE 0.02-INCH (20 SLOT)
MANUFACTURED BY TRILOC

BACKFILL MATERIAL
- ☐ GRAVEL ☒ FORMATION COLLAPSE
- ☐ BENTONITE MATERIAL FILL MATERIAL/BEDROCK
- ☐ SAND
- ☐

TOTAL LENGTH OF CASING AND SCREEN 20.44

DEPTH TO WATER FOLLOWING INSTALLATION (TOC) 16.81

DIAMETER OF BOREHOLE 10-INCH

NOTES:
1. SCALE: NONE
2. RECORD DEPTHS/LENGTHS IN TENTHS OF FEET, NOT IN INCHES
3. RECORD CONSTRUCTION DEPTHS BELOW GROUND LEVEL

C:\FORMS\PM_FSHIN.FRM mjb 09-04-92

MRC
ENVIRONMENTAL MANAGEMENT, INC.

MONITORING WELL INSTALLATION RECORD
FLUSH MOUNT INSTALLATION

WELL LOCATION INFORMATION

WELL NO. **MW10-04**
BOREHOLE NO. SB10-04
SITE NFD POINT MOLATE
SUBSITE AREA 10 - SHORELINE
DATE 02-02-94
RECORDED BY B. DeANGELIS
WELL PERMIT NO.

SURFACE COMPLETION INFORMATION

TYPE OF INSTALLATION
- ☐ OPEN HOLE
- ☒ INSIDE HOLLOW STEM AUGER

TYPE OF FLUSH MOUNT
- ☒ CHRISTY BOX
- ☐
- ☐ LOCKING COVER
- ☐ WATERTIGHT CAP
- ☒ LOCKING CAP

SURFACE SEAL
- ☐ NON-SHRINKING CEMENT
- ☐ CONCRETE
- ☒ QUIKCRETE
- ☐ CHECKED FOR SETTLEMENT
- ☐ INTERNAL MORTAR ADDED

GROUND SURFACE ELEVATION
- ☒ SURVEYED
  DATE MAY 24/25, 1994

MEASURING POINT
- ☒ TOP OF WELL CASING
- ☐ GROUND SURFACE
- ☐

DRILLING INFORMATION

DRILLING COMPANY/PERSONNEL
BAYLAND DRILLING CO.
KURT VOSS
JOHN MARTING

DRILL RIG

DRILLING METHOD
- ☒ HOLLOWSTEM AUGER
- ☐ AIR ROTARY
- ☐ MUD/WATER ROTARY
- ☐

DRILLING BEGAN
DATE 02-02-94 TIME 08:45

WELL COMPLETION BEGAN
DATE 02-02-94 TIME 10:53

WELL COMPLETION FINISHED
DATE 02-02-94 TIME 10:59

DRILLING FLUID TYPE
- ☐ BENTONITE ☐ WATER
- ☐ POLYMER ☒ NONE

DRILLING FLUID LOSS
- ☐ YES GALLONS
- ☒ NO

WATER ADDED DURING COMPLETION
- ☐ YES GALLONS
- ☒ NO

TOTAL FLUID LOSS TO FORMATION
GALLONS

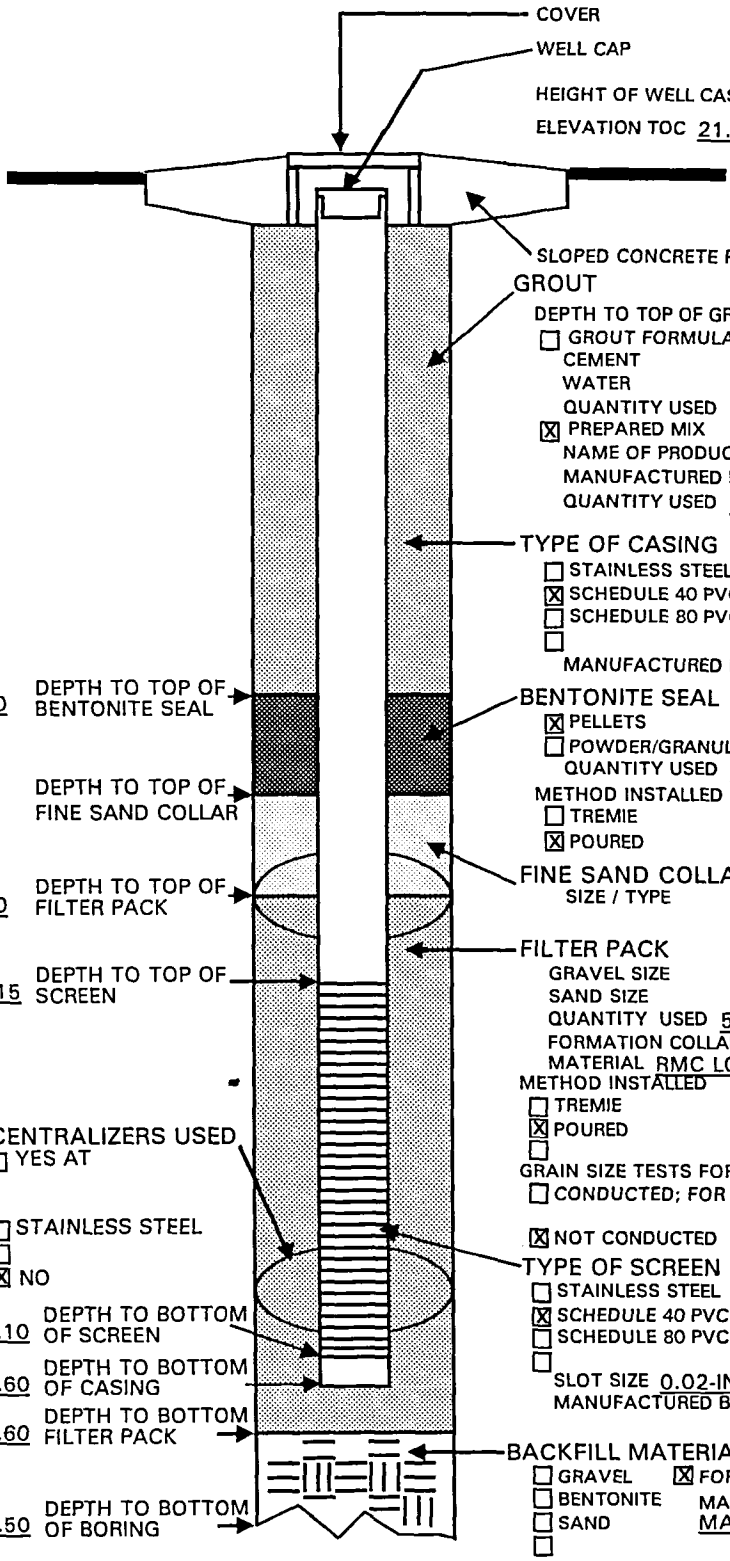

TOTAL LENGTH OF CASING AND SCREEN 20.43

DEPTH TO WATER FOLLOWING INSTALLATION (TOC) 16.05

DIAMETER OF BOREHOLE 10-INCH

NOTES:
1. SCALE: NONE
2. RECORD DEPTHS/LENGTHS IN TENTHS OF FEET, NOT IN INCHES
3. RECORD CONSTRUCTION DEPTHS BELOW GROUND LEVEL

C:\FORMS\PM_FSHIN.FRM mjb 09-04-92

PRC
ENVIRONMENTAL MANAGEMENT, INC.

MONITORING WELL INSTALLATION RECORD
FLUSH MOUNT INSTALLATION

WELL LOCATION INFORMATION

WELL NO. **MW10-05**
BOREHOLE NO. SB10-05
SITE NFD POINT MOLATE
SUBSITE AREA 10 - SHORELINE
DATE 02-02-94
RECORDED BY B. DeANGELIS
WELL PERMIT NO.

SURFACE COMPLETION INFORMATION

TYPE OF INSTALLATION
- ☐ OPEN HOLE
- ☒ INSIDE HOLLOW STEM AUGER

TYPE OF FLUSH MOUNT
- ☒ CHRISTY BOX
- ☐
- ☐ LOCKING COVER
- ☐ WATERTIGHT CAP
- ☒ LOCKING CAP

SURFACE SEAL
- ☐ NON-SHRINKING CEMENT
- ☐ CONCRETE
- ☒ QUIKCRETE
- ☐ CHECKED FOR SETTLEMENT
- ☐ INTERNAL MORTAR ADDED

GROUND SURFACE ELEVATION
- ☒ SURVEYED
  DATE MAY 24/25, 1994

MEASURING POINT
- ☒ TOP OF WELL CASING
- ☐ GROUND SURFACE
- ☐

DRILLING INFORMATION

DRILLING COMPANY/PERSONNEL
BAYLAND DRILLING CO.
KURT VOSS
JOHN MARTING

DRILL RIG CME 75

DRILLING METHOD
- ☒ HOLLOWSTEM AUGER
- ☐ AIR ROTARY
- ☐ MUD/WATER ROTARY
- ☐

DRILLING BEGAN
DATE 02-02-94 TIME 13:42

WELL COMPLETION BEGAN
DATE 02-02-94 TIME 15:20

WELL COMPLETION FINISHED
DATE 02-02-94 TIME 16:30

DRILLING FLUID TYPE
- ☐ BENTONITE ☐ WATER
- ☐ POLYMER ☒ NONE

DRILLING FLUID LOSS
- ☐ YES GALLONS
- ☒ NO

WATER ADDED DURING COMPLETION
- ☐ YES GALLONS
- ☒ NO

TOTAL FLUID LOSS TO FORMATION
GALLONS

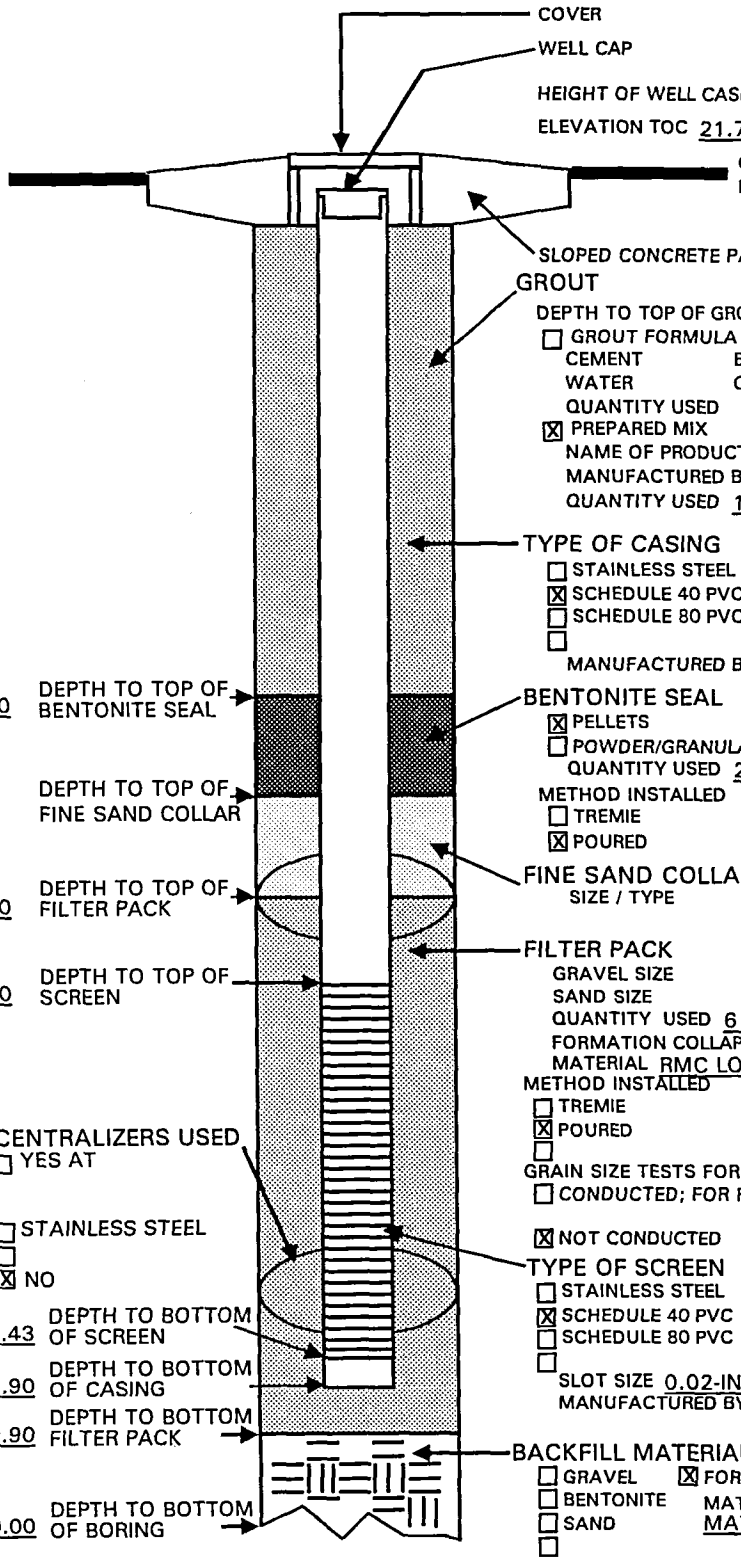

TOTAL LENGTH OF CASING AND SCREEN 20.66

DEPTH TO WATER FOLLOWING INSTALLATION (TOC) 16.42

DIAMETER OF BOREHOLE 10-INCH

NOTES:
1. SCALE: NONE
2. RECORD DEPTHS/LENGTHS IN TENTHS OF FEET, NOT IN INCHES
3. RECORD CONSTRUCTION DEPTHS BELOW GROUND LEVEL

C:\FORMS\PM_FSHIN.FRM mjb 09-04-92

PRC
ENVIRONMENTAL MANAGEMENT, INC.

MONITORING WELL INSTALLATION RECORD
FLUSH MOUNT INSTALLATION

WELL LOCATION INFORMATION

WELL NO. **MW10-08**
BOREHOLE NO. SB10-08
SITE NFD POINT MOLATE
SUBSITE AREA 10- SHORELINE
DATE 02-07-94
RECORDED BY B. DeANGELIS
WELL PERMIT NO.

SURFACE COMPLETION INFORMATION

TYPE OF INSTALLATION
- ☐ OPEN HOLE
- ☒ INSIDE HOLLOW STEM AUGER

TYPE OF FLUSH MOUNT
- ☒ CHRISTY BOX
- ☐
- ☐ LOCKING COVER
- ☐ WATERTIGHT CAP
- ☒ LOCKING CAP

SURFACE SEAL
- ☐ NON-SHRINKING CEMENT
- ☐ CONCRETE
- ☒ QUIKCRETE
- ☐ CHECKED FOR SETTLEMENT
- ☐ INTERNAL MORTAR ADDED

GROUND SURFACE ELEVATION
- ☒ SURVEYED
  DATE MAY 24/25, 1994

MEASURING POINT
- ☒ TOP OF WELL CASING
- ☐ GROUND SURFACE
- ☐

DRILLING INFORMATION

DRILLING COMPANY/PERSONNEL
BAYLAND DRILLING CO.
KURT VOSS
JOHN MARTING

DRILL RIG CME 75

DRILLING METHOD
- ☒ HOLLOWSTEM AUGER
- ☐ AIR ROTARY
- ☐ MUD/WATER ROTARY
- ☐

DRILLING BEGAN
DATE 02-03-94 TIME 12:35

WELL COMPLETION BEGAN
DATE 02-07-94 TIME 08:10

WELL COMPLETION FINISHED
DATE 02-07-94 TIME 09:55

DRILLING FLUID TYPE
- ☐ BENTONITE ☐ WATER
- ☐ POLYMER ☒ NONE

DRILLING FLUID LOSS
- ☐ YES GALLONS
- ☒ NO

WATER ADDED DURING COMPLETION
- ☐ YES GALLONS
- ☒ NO

TOTAL FLUID LOSS TO FORMATION
GALLONS

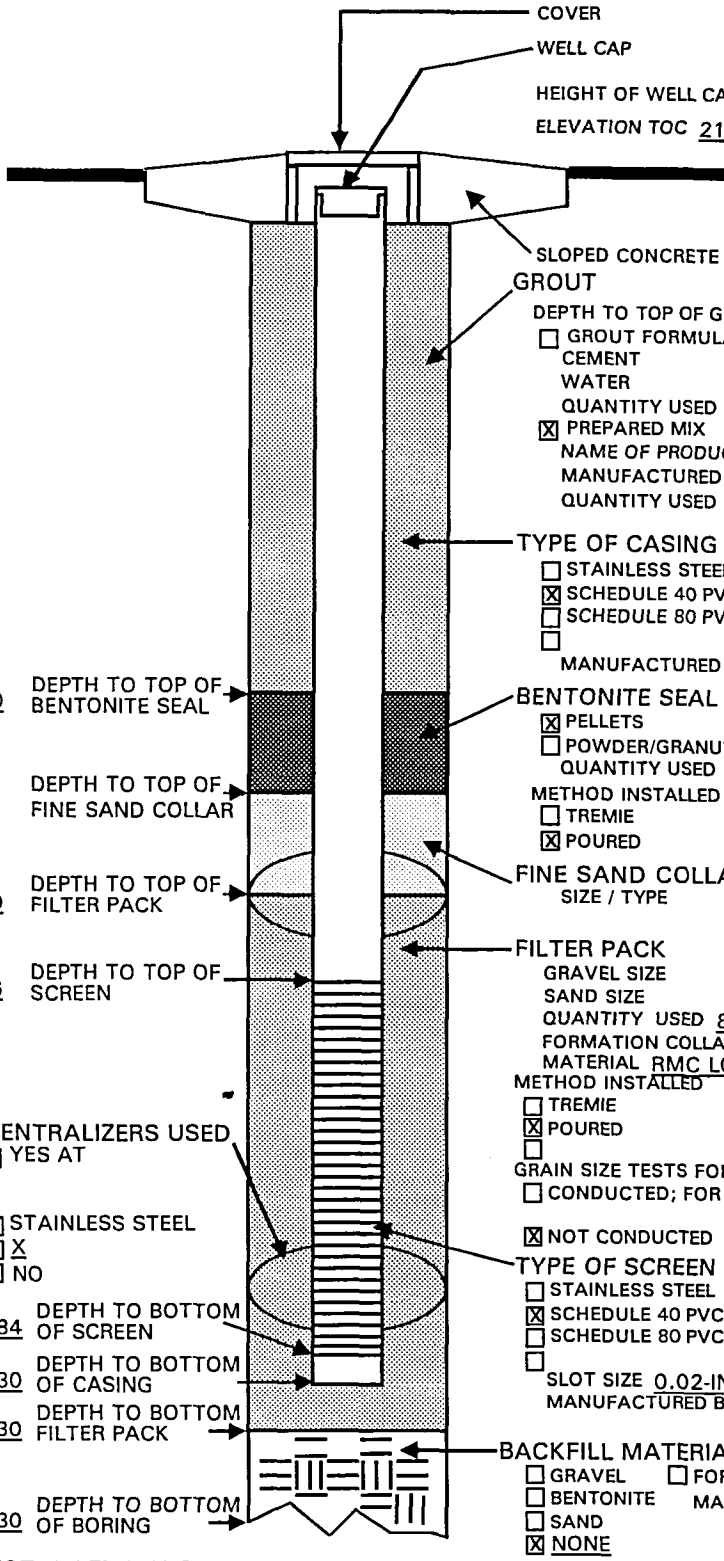

TOTAL LENGTH OF CASING AND SCREEN 25.40

DEPTH TO WATER FOLLOWING INSTALLATION (TOC) 10.30

DIAMETER OF BOREHOLE 10-INCH

NOTES:
1. SCALE: NONE
2. RECORD DEPTHS/LENGTHS IN TENTHS OF FEET, NOT IN INCHES
3. RECORD CONSTRUCTION DEPTHS BELOW GROUND LEVEL

C:\FORMS\PM_FSHIN.FRM mjb 09-04-92

MRC
ENVIRONMENTAL MANAGEMENT, INC.

MONITORING WELL INSTALLATION RECORD
FLUSH MOUNT INSTALLATION

WELL LOCATION INFORMATION

WELL NO. **MW10-09**
BOREHOLE NO. SB10-09
SITE NFD POINT MOLATE
SUBSITE AREA 10 - SHORELINE
DATE 02-04-94
RECORDED BY A. ORTELLI
WELL PERMIT NO.

SURFACE COMPLETION INFORMATION

TYPE OF INSTALLATION
- ☐ OPEN HOLE
- ☒ INSIDE HOLLOW STEM AUGER

TYPE OF FLUSH MOUNT
- ☒ CHRISTY BOX
- ☐
- ☐ LOCKING COVER
- ☐ WATERTIGHT CAP
- ☒ LOCKING CAP

SURFACE SEAL
- ☐ NON-SHRINKING CEMENT
- ☐ CONCRETE
- ☒ QUIKCRETE
- ☐ CHECKED FOR SETTLEMENT
- ☐ INTERNAL MORTAR ADDED

GROUND SURFACE ELEVATION
- ☒ SURVEYED
  DATE MAY 24/25, 1994

MEASURING POINT
- ☒ TOP OF WELL CASING
- ☐ GROUND SURFACE
- ☐

DRILLING INFORMATION

DRILLING COMPANY/PERSONNEL
BAYLAND DRILLING CO.
KURT VOSS
JOHN MARTING

DRILL RIG CME 75

DRILLING METHOD
- ☒ HOLLOWSTEM AUGER
- ☐ AIR ROTARY
- ☐ MUD/WATER ROTARY
- ☐

DRILLING BEGAN
DATE 02-04-94 TIME 08:45

WELL COMPLETION BEGAN
DATE 02-04-94 TIME 10:55

WELL COMPLETION FINISHED
DATE 02-04-94 TIME 12:00

DRILLING FLUID TYPE
- ☐ BENTONITE ☐ WATER
- ☐ POLYMER ☒ NONE

DRILLING FLUID LOSS
- ☐ YES GALLONS
- ☒ NO

WATER ADDED DURING COMPLETION
- ☐ YES GALLONS
- ☒ NO

TOTAL FLUID LOSS TO FORMATION
GALLONS

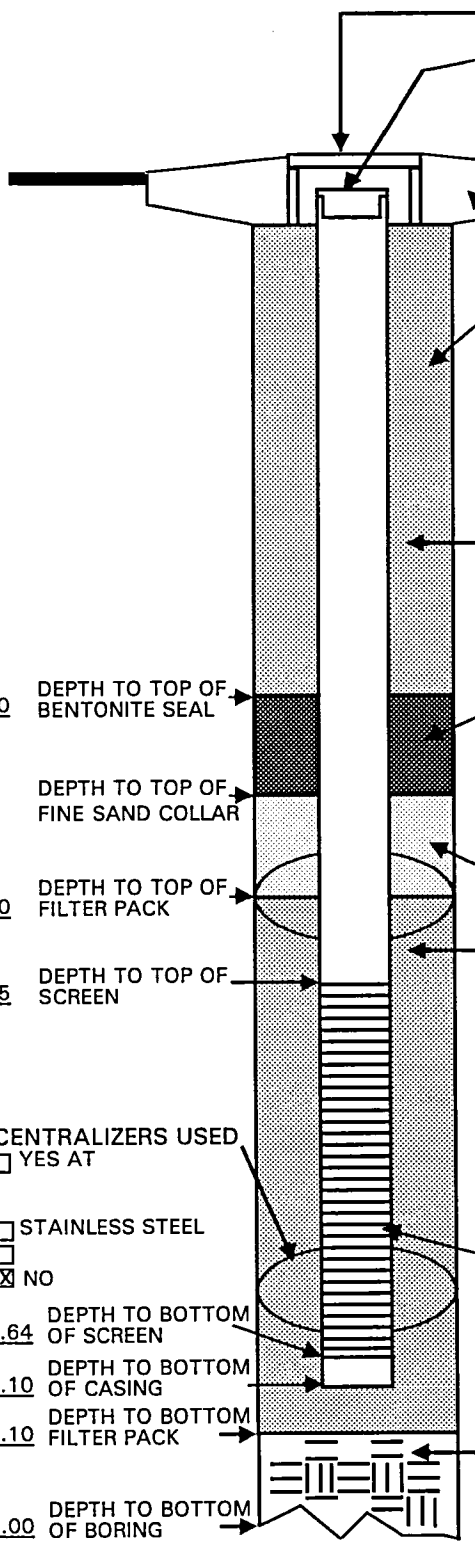

GROUT
DEPTH TO TOP OF GROUT
- ☐ GROUT FORMULA (PROPORTION OF EACH)
  CEMENT BENTONITE
  WATER OTHER
  QUANTITY USED
- ☒ PREPARED MIX
  NAME OF PRODUCT HIGH SOLIDS GROUT
  MANUFACTURED BY VOLCLAY
  QUANTITY USED 1 50-LB BAG

TYPE OF CASING
- ☐ STAINLESS STEEL
- ☒ SCHEDULE 40 PVC
- ☐ SCHEDULE 80 PVC
- ☐

CASING DIAMETER
INSIDE 4-INCH
OUTSIDE 4.5-INCH

MANUFACTURED BY TRILOC

BENTONITE SEAL
- ☒ PELLETS
- ☐ POWDER/GRANULAR
- ☐ SLURRY
- ☐

QUANTITY USED 1.5 5-GAL BUCKETS

METHOD INSTALLED
- ☐ TREMIE
- ☒ POURED
- ☐
- ☐ NOT USED

FINE SAND COLLAR (OPTIONAL)
SIZE / TYPE

FILTER PACK
GRAVEL SIZE ; TO FT.
SAND SIZE ; 7.50 TO 20.10 FT.
QUANTITY USED 5.5 100-LB BAGS
FORMATION COLLAPSE; TO FT.
MATERIAL RMC LONESTAR #3

METHOD INSTALLED
- ☐ TREMIE
- ☒ POURED
- ☐

GRAIN SIZE TESTS FOR FILTER PACK
- ☐ CONDUCTED; FOR REPORT, REFER TO
- ☒ NOT CONDUCTED

CENTRALIZERS USED
- ☐ YES AT
- ☐ STAINLESS STEEL
- ☐
- ☒ NO

TYPE OF SCREEN
- ☐ STAINLESS STEEL
- ☒ SCHEDULE 40 PVC
- ☐ SCHEDULE 80 PVC
- ☐

SCREEN DIAMETER
INSIDE 4-INCH
OUTSIDE 4.5-INCH

SLOT SIZE 0.02-INCH (20 SLOT)
MANUFACTURED BY TRILOC

BACKFILL MATERIAL
- ☐ GRAVEL
- ☐ BENTONITE
- ☐ SAND
- ☐
- ☒ FORMATION COLLAPSE

MATERIAL FILL MATERIAL/COLLUVIUM

TOTAL LENGTH OF CASING AND SCREEN 20.43

DEPTH TO WATER FOLLOWING INSTALLATION (TOC) 7.63

DIAMETER OF BOREHOLE 10-INCH

NOTES:
1. SCALE: NONE
2. RECORD DEPTHS/LENGTHS IN TENTHS OF FEET, NOT IN INCHES
3. RECORD CONSTRUCTION DEPTHS BELOW GROUND LEVEL

C:\FORMS\PM_FSHIN.FRM mjb 09-04-92

PRC
ENVIRONMENTAL MANAGEMENT, INC.

MONITORING WELL INSTALLATION RECORD
FLUSH MOUNT INSTALLATION

WELL LOCATION INFORMATION

WELL NO. **MW10-10**
BOREHOLE NO. SB10-10
SITE NFD POINT MOLATE
SUBSITE AREA 10 - SHORELINE
DATE 02-04-94
RECORDED BY A. ORTELLI
WELL PERMIT NO.

SURFACE COMPLETION INFORMATION

TYPE OF INSTALLATION
- ☐ OPEN HOLE
- ☒ INSIDE HOLLOW STEM AUGER

TYPE OF FLUSH MOUNT
- ☒ CHRISTY BOX
- ☐
- ☐ LOCKING COVER
- ☐ WATERTIGHT CAP
- ☒ LOCKING CAP

SURFACE SEAL
- ☐ NON-SHRINKING CEMENT
- ☐ CONCRETE
- ☒ QUIKCRETE
- ☐ CHECKED FOR SETTLEMENT
- ☐ INTERNAL MORTAR ADDED

GROUND SURFACE ELEVATION
- ☒ SURVEYED
  DATE MAY 24/25, 19994

MEASURING POINT
- ☒ TOP OF WELL CASING
- ☐ GROUND SURFACE
- ☐

DRILLING INFORMATION

DRILLING COMPANY/PERSONNEL
BAYLAND DRILLING CO.
KURT VOSS
JOHN MARTING

DRILL RIG CME 75

DRILLING METHOD
- ☒ HOLLOWSTEM AUGER
- ☐ AIR ROTARY
- ☐ MUD/WATER ROTARY
- ☐

DRILLING BEGAN
DATE 02-04-94 TIME 13:00

WELL COMPLETION BEGAN
DATE 02-04-94 TIME 14:30

WELL COMPLETION FINISHED
DATE 02-04-94 TIME 16:07

DRILLING FLUID TYPE
- ☐ BENTONITE ☐ WATER
- ☐ POLYMER ☒ NONE

DRILLING FLUID LOSS
- ☐ YES GALLONS
- ☒ NO

WATER ADDED DURING COMPLETION
- ☐ YES GALLONS
- ☒ NO

TOTAL FLUID LOSS TO FORMATION
GALLONS

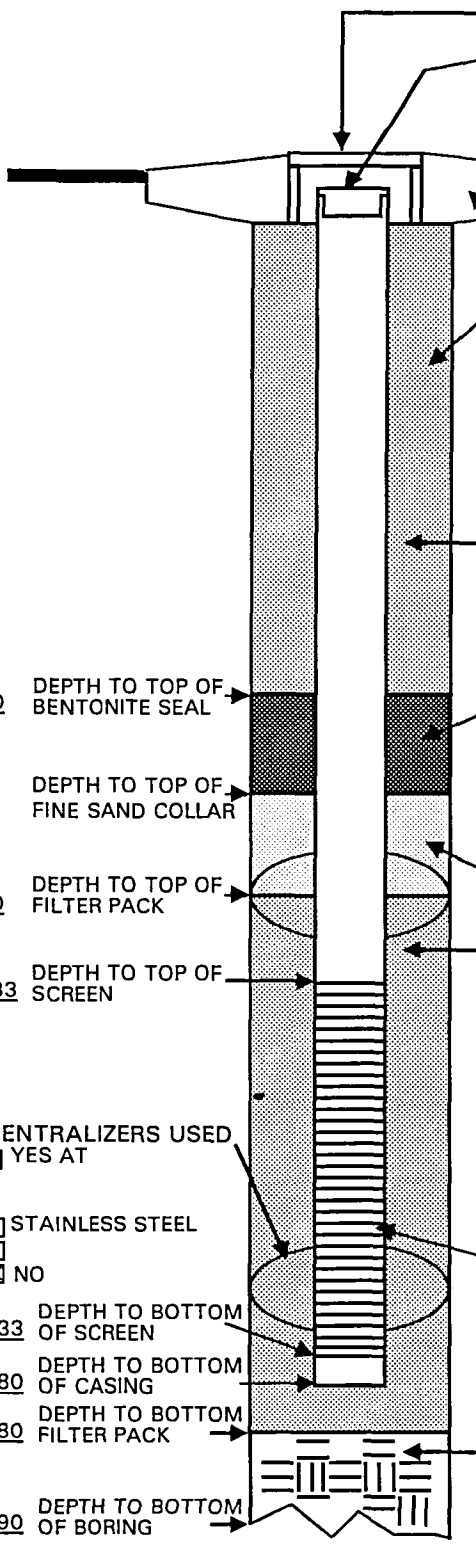

TOTAL LENGTH OF CASING AND SCREEN 21.91

DEPTH TO WATER FOLLOWING INSTALLATION (TOC) 8.44

DIAMETER OF BOREHOLE 10-INCH

DEPTH TO TOP OF GROUT
- ☐ GROUT FORMULA (PROPORTION OF EACH)
  CEMENT BENTONITE
  WATER OTHER
  QUANTITY USED
- ☒ PREPARED MIX
  NAME OF PRODUCT HIGH SOLIDS GROUT
  MANUFACTURED BY VOLCLAY
  QUANTITY USED

TYPE OF CASING
- ☐ STAINLESS STEEL — CASING DIAMETER
- ☒ SCHEDULE 40 PVC — INSIDE 4-INCH
- ☐ SCHEDULE 80 PVC — OUTSIDE 4.5-INCH
- ☐

MANUFACTURED BY TRILOC

BENTONITE SEAL
- ☒ PELLETS ☐ SLURRY
- ☐ POWDER/GRANULAR ☐
- QUANTITY USED 1 5-GAL BUCKET

METHOD INSTALLED
- ☐ TREMIE ☐
- ☒ POURED ☐ NOT USED

FINE SAND COLLAR (OPTIONAL)
SIZE / TYPE

FILTER PACK
- GRAVEL SIZE ; TO FT.
- SAND SIZE ; 9.40 TO 21.80 FT.
- QUANTITY USED 6.5 100-LB BAGS
- FORMATION COLLAPSE; TO FT.
- MATERIAL RMC LONESTAR #3

METHOD INSTALLED
- ☐ TREMIE
- ☒ POURED
- ☐

GRAIN SIZE TESTS FOR FILTER PACK
- ☐ CONDUCTED; FOR REPORT, REFER TO
- ☒ NOT CONDUCTED

CENTRALIZERS USED
- ☐ YES AT
- ☐ STAINLESS STEEL
- ☐
- ☒ NO

TYPE OF SCREEN
- ☐ STAINLESS STEEL — SCREEN DIAMETER
- ☒ SCHEDULE 40 PVC — INSIDE 4-INCH
- ☐ SCHEDULE 80 PVC — OUTSIDE 4.5-INCH
- ☐

SLOT SIZE 0.02-INCH (20 SLOT)
MANUFACTURED BY TRILOC

BACKFILL MATERIAL
- ☐ GRAVEL ☒ FORMATION COLLAPSE
- ☐ BENTONITE MATERIAL FILL
- ☐ SAND MATERIAL/COLLUVIUM
- ☐

NOTES:
1. SCALE: NONE
2. RECORD DEPTHS/LENGTHS IN TENTHS OF FEET, NOT IN INCHES
3. RECORD CONSTRUCTION DEPTHS BELOW GROUND LEVEL

C:\FORMS\PM_FSHIN.FRM mjb 09-04-92

PRC
ENVIRONMENTAL MANAGEMENT, INC.

MONITORING WELL INSTALLATION RECORD
FLUSH MOUNT INSTALLATION

WELL LOCATION INFORMATION

WELL NO. **MW10-11**
BOREHOLE NO. SB10-11
SITE NFD POINT MOLATE
SUBSITE AREA 10 - SHORELINE
DATE 02-08-94
RECORDED BY B. DeANGELIS
WELL PERMIT NO.

SURFACE COMPLETION INFORMATION

TYPE OF INSTALLATION
- ☐ OPEN HOLE
- ☒ INSIDE HOLLOW STEM AUGER

TYPE OF FLUSH MOUNT
- ☒ CHRISTY BOX
- ☐
- ☐ LOCKING COVER
- ☐ WATERTIGHT CAP
- ☒ LOCKING CAP

SURFACE SEAL
- ☐ NON-SHRINKING CEMENT
- ☐ CONCRETE
- ☒ QUIKCRETE
- ☐ CHECKED FOR SETTLEMENT
- ☐ INTERNAL MORTAR ADDED

GROUND SURFACE ELEVATION
- ☒ SURVEYED
  DATE MAY 24/25, 1994

MEASURING POINT
- ☒ TOP OF WELL CASING
- ☐ GROUND SURFACE
- ☐

DRILLING INFORMATION

DRILLING COMPANY/PERSONNEL
BAYLAND DRILLING CO.
KURT VOSS
STEVE SMITH

DRILL RIG CME 75

DRILLING METHOD
- ☒ HOLLOWSTEM AUGER
- ☐ AIR ROTARY
- ☐ MUD/WATER ROTARY
- ☐

DRILLING BEGAN
DATE 02-07-94 TIME 10:55

WELL COMPLETION BEGAN
DATE 02-08-94 TIME 08:20

WELL COMPLETION FINISHED
DATE 02-08-94 TIME 09:10

DRILLING FLUID TYPE
- ☐ BENTONITE ☐ WATER
- ☐ POLYMER ☒ NONE

DRILLING FLUID LOSS
- ☐ YES GALLONS
- ☒ NO

WATER ADDED DURING COMPLETION
- ☐ YES GALLONS
- ☒ NO

TOTAL FLUID LOSS TO FORMATION
GALLONS

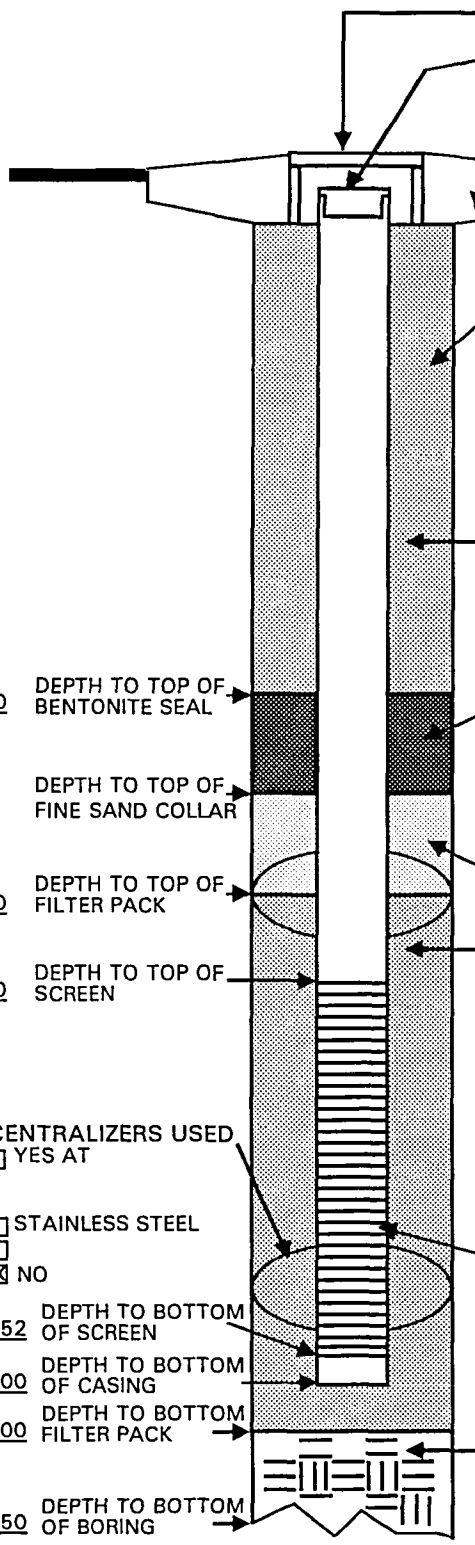

DEPTH TO TOP OF GROUT
- ☐ GROUT FORMULA (PROPORTION OF EACH)
  CEMENT BENTONITE
  WATER OTHER
  QUANTITY USED
- ☒ PREPARED MIX
  NAME OF PRODUCT HIGH SOLIDS GROUT
  MANUFACTURED BY VOLCLAY
  QUANTITY USED 3/4 50-LB BAG

TYPE OF CASING
- ☐ STAINLESS STEEL — CASING DIAMETER
- ☒ SCHEDULE 40 PVC — INSIDE 4-INCH
- ☐ SCHEDULE 80 PVC — OUTSIDE 4.5-INCH
- ☐

MANUFACTURED BY TRILOC

BENTONITE SEAL
- ☒ PELLETS ☐ SLURRY
- ☐ POWDER/GRANULAR ☐
- QUANTITY USED 1 5-GAL BUCKET

METHOD INSTALLED
- ☐ TREMIE ☐
- ☒ POURED ☐ NOT USED

FINE SAND COLLAR (OPTIONAL)
SIZE / TYPE

FILTER PACK
- GRAVEL SIZE ; TO FT.
- SAND SIZE ; 4.40 TO 22.00 FT.
- QUANTITY USED 8.5 100-LB BAGS
- FORMATION COLLAPSE; TO FT.
- MATERIAL RMC LONESTAR #3

METHOD INSTALLED
- ☐ TREMIE
- ☒ POURED
- ☐

GRAIN SIZE TESTS FOR FILTER PACK
- ☐ CONDUCTED; FOR REPORT, REFER TO
- ☒ NOT CONDUCTED

TYPE OF SCREEN
- ☐ STAINLESS STEEL — SCREEN DIAMETER
- ☒ SCHEDULE 40 PVC — INSIDE 4-INCH
- ☐ SCHEDULE 80 PVC — OUTSIDE 4.5-INCH
- ☐

SLOT SIZE 0.02-IINCH (20 SLOT)
MANUFACTURED BY TRILOC

BACKFILL MATERIAL
- ☐ GRAVEL ☒ FORMATION COLLAPSE
- ☐ BENTONITE MATERIAL FILL MATERIAL/COLLUVIUM
- ☐ SAND
- ☐

- ☐ STAINLESS STEEL
- ☐
- ☒ NO

TOTAL LENGTH OF CASING AND SCREEN 22.56

DEPTH TO WATER FOLLOWING INSTALLATION (TOC) 6.32

DIAMETER OF BOREHOLE 10-INCH

NOTES:
1. SCALE: NONE
2. RECORD DEPTHS/LENGTHS IN TENTHS OF FEET, NOT IN INCHES
3. RECORD CONSTRUCTION DEPTHS BELOW GROUND LEVEL

C:\FORMS\PM_FSHIN.FRM mjb 09-04-92

RMC
ENVIRONMENTAL MANAGEMENT, INC.

MONITORING WELL INSTALLATION RECORD
FLUSH MOUNT INSTALLATION

WELL LOCATION INFORMATION

WELL NO. **MW10-12**
BOREHOLE NO. SB10-12
SITE NFD POINT MOLATE
SUBSITE AREA 10 - SHORELINE
DATE 02-07-94
RECORDED BY B. DeANGELIS
WELL PERMIT NO.

SURFACE COMPLETION INFORMATION

TYPE OF INSTALLATION
- ☐ OPEN HOLE
- ☒ INSIDE HOLLOW STEM AUGER

TYPE OF FLUSH MOUNT
- ☒ CHRISTY BOX
- ☐
- ☐ LOCKING COVER
- ☐ WATERTIGHT CAP
- ☒ LOCKING CAP

SURFACE SEAL
- ☐ NON-SHRINKING CEMENT
- ☐ CONCRETE
- ☒ QUIKCRETE
- ☐ CHECKED FOR SETTLEMENT
- ☐ INTERNAL MORTAR ADDED

GROUND SURFACE ELEVATION
- ☒ SURVEYED
  DATE MAY 24/25, 1994

MEASURING POINT
- ☒ TOP OF WELL CASING
- ☐ GROUND SURFACE
- ☐

DRILLING INFORMATION

DRILLING COMPANY/PERSONNEL
BAYLAND DRILLING
KURT VOSS
JOHN MARTING

DRILL RIG CME 75

DRILLING METHOD
- ☒ HOLLOWSTEM AUGER
- ☐ AIR ROTARY
- ☐ MUD/WATER ROTARY
- ☐

DRILLING BEGAN
DATE 02-07-94 TIME 13:30

WELL COMPLETION BEGAN
DATE 02-07-94 TIME 15:25

WELL COMPLETION FINISHED
DATE 02-07-94 TIME 15:55

DRILLING FLUID TYPE
- ☐ BENTONITE ☐ WATER
- ☐ POLYMER ☒ NONE

DRILLING FLUID LOSS
- ☐ YES GALLONS
- ☒ NO

WATER ADDED DURING COMPLETION
- ☐ YES GALLONS
- ☒ NO

TOTAL FLUID LOSS TO FORMATION
GALLONS

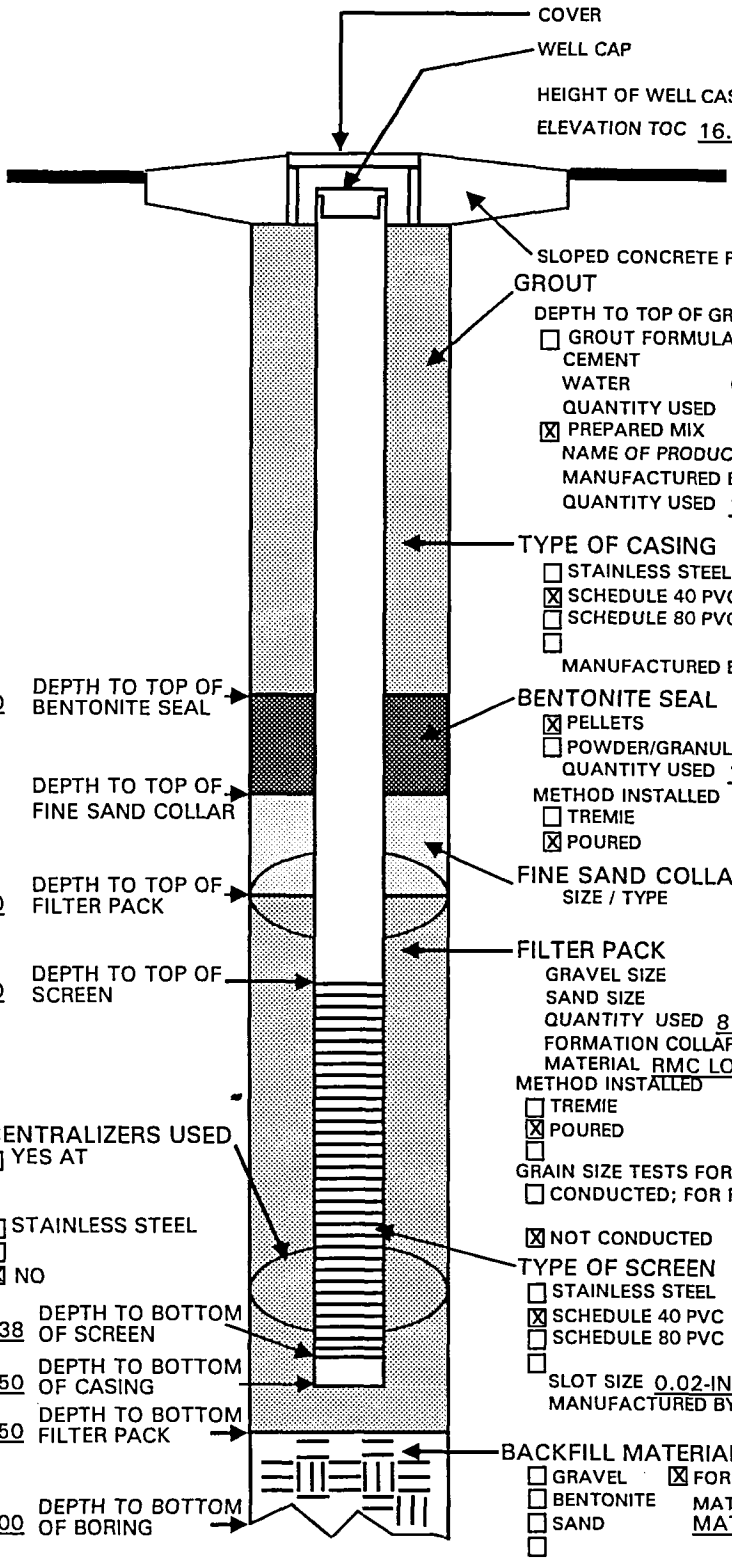

TOTAL LENGTH OF CASING AND SCREEN 19.10

DEPTH TO WATER FOLLOWING INSTALLATION (TOC) 2.35

DIAMETER OF BOREHOLE 10-INCH

NOTES:
1. SCALE: NONE
2. RECORD DEPTHS/LENGTHS IN TENTHS OF FEET, NOT IN INCHES
3. RECORD CONSTRUCTION DEPTHS BELOW GROUND LEVEL

C:\FORMS\PM_FSHIN.FRM mjb 09-04-92

RMC
ENVIRONMENTAL MANAGEMENT, INC.

MONITORING WELL INSTALLATION RECORD
FLUSH MOUNT INSTALLATION

WELL LOCATION INFORMATION

WELL NO. **MW10-14**
BOREHOLE NO. SB10-14
SITE NFD POINT MOLATE
SUBSITE AREA 10 - SHORELINE
DATE 02-08-94
RECORDED BY B. DeANGELIS
WELL PERMIT NO.

SURFACE COMPLETION INFORMATION

TYPE OF INSTALLATION
- ☐ OPEN HOLE
- ☒ INSIDE HOLLOW STEM AUGER

TYPE OF FLUSH MOUNT
- ☒ CHRISTY BOX
- ☐
- ☐ LOCKING COVER
- ☐ WATERTIGHT CAP
- ☒ LOCKING CAP

SURFACE SEAL
- ☐ NON-SHRINKING CEMENT
- ☐ CONCRETE
- ☒ QUIKCRETE
- ☐ CHECKED FOR SETTLEMENT
- ☐ INTERNAL MORTAR ADDED

GROUND SURFACE ELEVATION
- ☒ SURVEYED
  DATE MAY 24/25, 1994

MEASURING POINT
- ☒ TOP OF WELL CASING
- ☐ GROUND SURFACE
- ☐

DRILLING INFORMATION

DRILLING COMPANY/PERSONNEL
BAYLAND DRILLING CO.
KURT VOSS
JOHN MARTING

DRILL RIG

DRILLING METHOD
- ☒ HOLLOWSTEM AUGER
- ☐ AIR ROTARY
- ☐ MUD/WATER ROTARY
- ☐

DRILLING BEGAN
DATE 02-08-94 TIME 13:00

WELL COMPLETION BEGAN
DATE 02-09-94 TIME 08:45

WELL COMPLETION FINISHED
DATE 02-09-94 TIME 10:20

DRILLING FLUID TYPE
- ☐ BENTONITE ☐ WATER
- ☐ POLYMER ☒ NONE

DRILLING FLUID LOSS
- ☐ YES GALLONS
- ☒ NO

WATER ADDED DURING COMPLETION
- ☐ YES GALLONS
- ☒ NO

TOTAL FLUID LOSS TO FORMATION
GALLONS

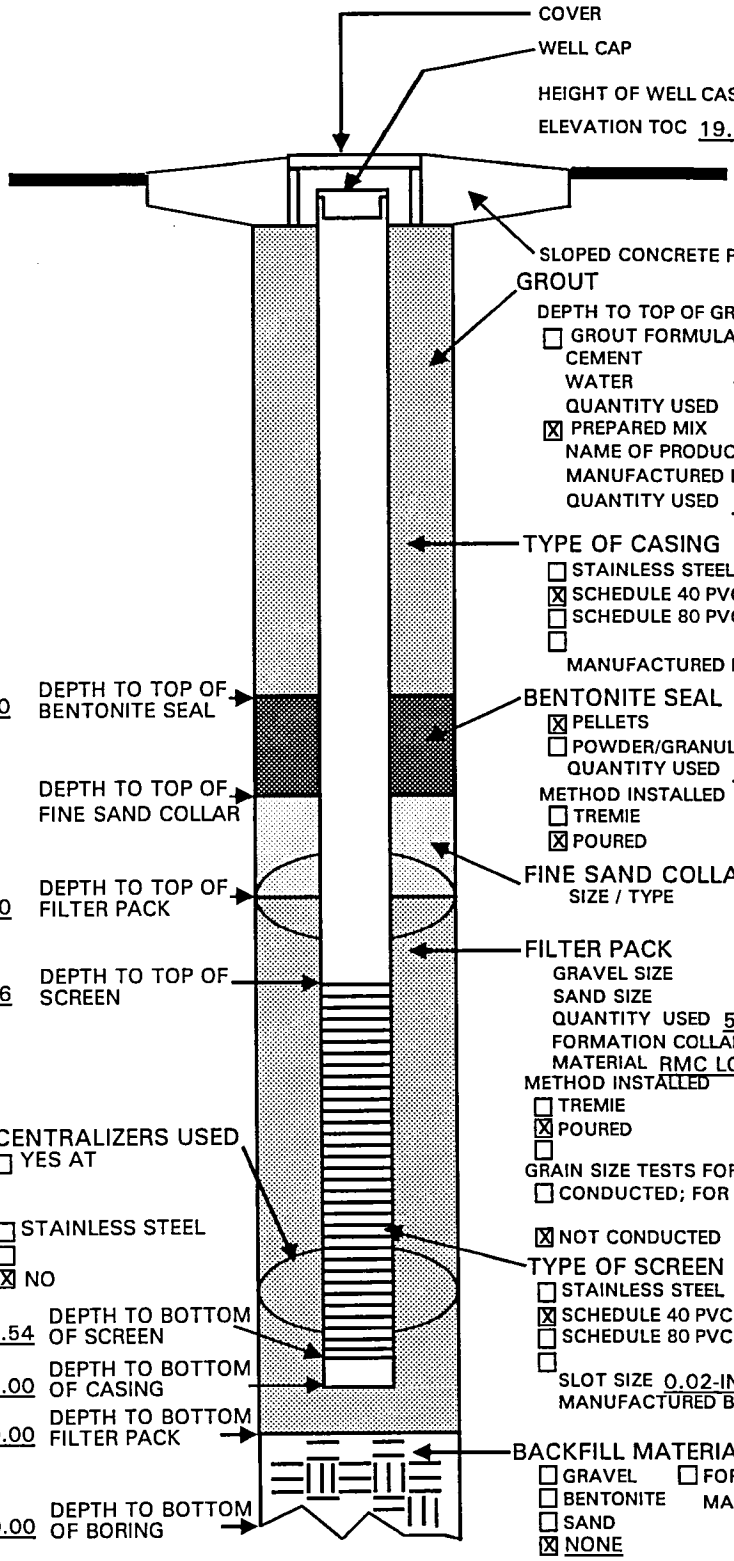

TOTAL LENGTH OF CASING AND SCREEN 20.24

DEPTH TO WATER FOLLOWING INSTALLATION (TOC) 6.44

DIAMETER OF BOREHOLE 10-INCH

NOTES:
1. SCALE: NONE
2. RECORD DEPTHS/LENGTHS IN TENTHS OF FEET, NOT IN INCHES
3. RECORD CONSTRUCTION DEPTHS BELOW GROUND LEVEL

C:\FORMS\PM_FSHIN.FRM mjb 09-04-92

MRC
ENVIRONMENTAL MANAGEMENT, INC.

MONITORING WELL INSTALLATION RECORD
ABOVE GROUND INSTALLATION

WELL LOCATION INFORMATION

WELL NO. **MW10-15**
BOREHOLE NO. SB10-15
SITE NFD POINT MOLATE
SUBSITE AREA 10 - SHORELINE
DATE 02-09-94
RECORDED BY B. DeANGELIS
WELL PERMIT NO.

SURFACE COMPLETION INFORMATION

TYPE OF INSTALLATION
- ☐ OPEN HOLE
- ☒ INSIDE HOLLOW STEM AUGER

TYPE OF PROTECTIVE CASING
- ☒ STEEL SIZE
- ☐
- ☒ PROTECTIVE POSTS INSTALLED

SURFACE SEAL
- ☐ NON-SHRINKING CEMENT
- ☐ CONCRETE
- ☒ QUIKCRETE
- ☐ CHECKED FOR SETTLEMENT
- ☐ INTERNAL MORTAR ADDED

GROUND SURFACE ELEVATION 2.00
- ☒ SURVEYED
  DATE MAY 24/25, 1994

MEASURING POINT
- ☒ TOP OF WELL CASING
- ☐ TOP OF PROTECTIVE CASING
- ☐ GROUND SURFACE
- ☐

DRILLING INFORMATION

DRILLING COMPANY/PERSONNEL
BAYLAND DRILLING CO.
KURT VOSS
JOHN MARTING

DRILL RIG CME 75

DRILLING METHOD
- ☒ HOLLOWSTEM AUGER
- ☐ AIR ROTARY
- ☐ MUD/WATER ROTARY
- ☐

DRILLING BEGAN
DATE 02-09-94 TIME 10:40

WELL COMPLETION BEGAN
DATE 02-09-94 TIME 13:25

WELL COMPLETION FINISHED
DATE 02-09-94 TIME 14:00

DRILLING FLUID TYPE
- ☐ BENTONITE ☐ WATER
- ☐ POLYMER ☒ NONE

DRILLING FLUID LOSS
- ☐ YES GALLONS
- ☒ NO

WATER ADDED DURING COMPLETION
- ☐ YES GALLONS
- ☒ NO

TOTAL FLUID LOSS TO FORMATION
GALLONS

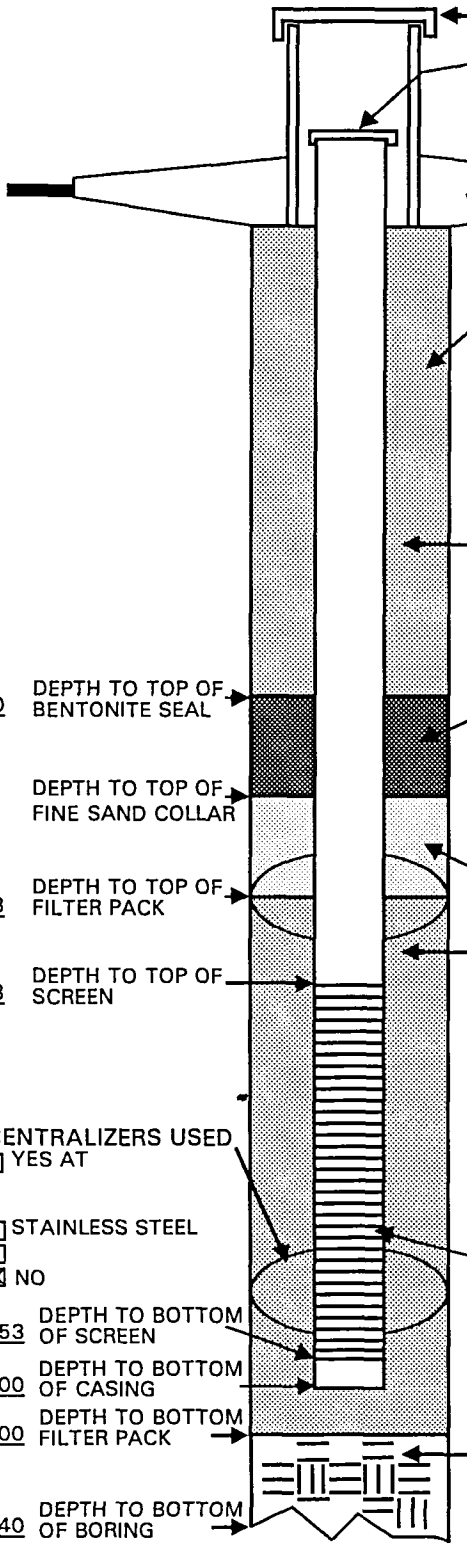

LOCKING COVER
WELL CAP
HEIGHT OF PROTECTIVE CASING
HEIGHT OF WELL CASING 1.40
ELEVATION TOC 42.82
GROUND ELEVATION 41.42
SLOPED CONCRETE PAD / SURFACE SEAL

GROUT
DEPTH TO TOP OF GROUT
- ☐ GROUT FORMULA (PROPORTION OF EACH)
  CEMENT BENTONITE
  WATER OTHER
  QUANTITY USED
- ☒ PREPARED MIX
  NAME OF PRODUCT HIGH SOLIDS GROUT
  MANUFACTURED BY VOLCLAY
  QUANTITY USED

TYPE OF CASING
- ☐ STAINLESS STEEL CASING DIAMETER
- ☒ SCHEDULE 40 PVC INSIDE 4-INCH
- ☐ SCHEDULE 80 PVC OUTSIDE 4.5-INCH
- ☐
  MANUFACTURED BY TRILOC

BENTONITE SEAL
- ☒ PELLETS ☐ SLURRY
- ☐ POWDER/GRANULAR ☐
  QUANTITY USED 1/4 5-GAL BUCKET

METHOD INSTALLED
- ☐ TREMIE ☐
- ☒ POURED ☐ NOT USED

FINE SAND COLLAR (OPTIONAL)
SIZE / TYPE

FILTER PACK
GRAVEL SIZE ; TO FT.
SAND SIZE ; 2.48 TO 15.00 FT.
QUANTITY USED 5.5 100-LB BAGS
FORMATION COLLAPSE; TO FT.
MATERIAL RMC LONESTAR #3

METHOD INSTALLED
- ☐ TREMIE
- ☒ POURED
- ☐

GRAIN SIZE TESTS FOR FILTER PACK
- ☐ CONDUCTED; FOR REPORT, REFER TO
- ☒ NOT CONDUCTED

CENTRALIZERS USED
- ☐ YES AT
- ☐ STAINLESS STEEL
- ☐
- ☒ NO

TYPE OF SCREEN
- ☐ STAINLESS STEEL SCREEN DIAMETER
- ☒ SCHEDULE 40 PVC INSIDE 4-INCH
- ☐ SCHEDULE 80 PVC OUTSIDE 4.5-INCH
- ☐
  SLOT SIZE 0.02-INCH (20 SLOT)
  MANUFACTURED BY TRILOC

BACKFILL MATERIAL
- ☐ GRAVEL ☒ FORMATION COLLAPSE
- ☐ BENTONITE MATERIAL COLLUVIUM
- ☐ SAND
- ☐

TOTAL LENGTH OF CASING AND SCREEN 17.44

DEPTH TO WATER FOLLOWING INSTALLATION (TOC) 14.86

DIAMETER OF BOREHOLE 10-INCH

NOTES:
1. SCALE: NONE
2. RECORD DEPTHS/LENGTHS IN TENTHS OF FEET, NOT IN INCHES
3. RECORD CONSTRUCTION DEPTHS BELOW GROUND LEVEL

C:\FORMS\PM_ABVIN.FRM mjb 09-04-92

MRC
ENVIRONMENTAL MANAGEMENT, INC.

MONITORING WELL INSTALLATION RECORD
FLUSH MOUNT INSTALLATION

WELL LOCATION INFORMATION

WELL NO. **MW11-54**
BOREHOLE NO. SB11-54
SITE NFD POINT MOLATE
SUBSITE AREA 11 - TPA
DATE 02-15-94
RECORDED BY A. ORTELLI
WELL PERMIT NO.

SURFACE COMPLETION INFORMATION

TYPE OF INSTALLATION
- ☐ OPEN HOLE
- ☒ INSIDE HOLLOW STEM AUGER

TYPE OF FLUSH MOUNT
- ☒ CHRISTY BOX
- ☐
- ☐ LOCKING COVER
- ☐ WATERTIGHT CAP
- ☒ LOCKING CAP

SURFACE SEAL
- ☐ NON-SHRINKING CEMENT
- ☐ CONCRETE
- ☒ QUIKCRETE
- ☐ CHECKED FOR SETTLEMENT
- ☐ INTERNAL MORTAR ADDED

GROUND SURFACE ELEVATION
- ☒ SURVEYED
  DATE MAY 24/25, 1994

MEASURING POINT
- ☒ TOP OF WELL CASING
- ☐ GROUND SURFACE
- ☐

DRILLING INFORMATION

DRILLING COMPANY/PERSONNEL
BAYLAND DRILLING CO.
KURT VOSS
JOHN MARTING

DRILL RIG CME 75

DRILLING METHOD
- ☒ HOLLOWSTEM AUGER
- ☐ AIR ROTARY
- ☐ MUD/WATER ROTARY
- ☐

DRILLING BEGAN
DATE 02-14-94 TIME 14:00

WELL COMPLETION BEGAN
DATE 02-15-94 TIME 08:20

WELL COMPLETION FINISHED
DATE 02-15-94 TIME 09:30

DRILLING FLUID TYPE
- ☐ BENTONITE ☐ WATER
- ☐ POLYMER ☒ NONE

DRILLING FLUID LOSS
- ☐ YES GALLONS
- ☒ NO

WATER ADDED DURING COMPLETION
- ☐ YES GALLONS
- ☒ NO

TOTAL FLUID LOSS TO FORMATION
GALLONS

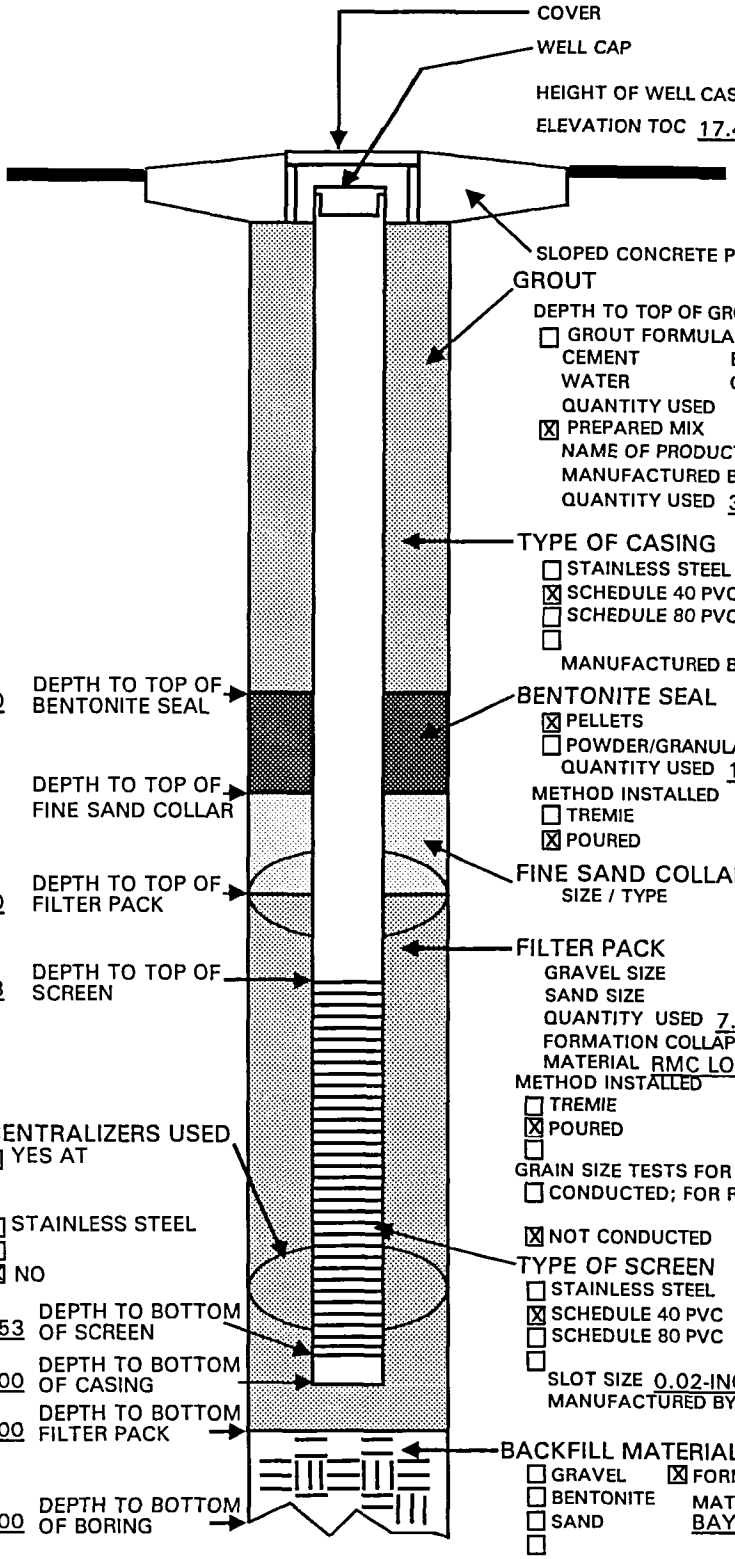

TOTAL LENGTH OF CASING AND SCREEN 25.41

DEPTH TO WATER FOLLOWING INSTALLATION (TOC) 13.13

DIAMETER OF BOREHOLE 10-INCH

NOTES:
1. SCALE: NONE
2. RECORD DEPTHS/LENGTHS IN TENTHS OF FEET, NOT IN INCHES
3. RECORD CONSTRUCTION DEPTHS BELOW GROUND LEVEL

C:\FORMS\PM_FSHIN.FRM mjb 09-04-92

MRC
ENVIRONMENTAL MANAGEMENT, INC.

MONITORING WELL INSTALLATION RECORD
FLUSH MOUNT INSTALLATION

WELL LOCATION INFORMATION

WELL NO. **MW11-55**
BOREHOLE NO. SB11-55
SITE NFD POINT MOLATE
SUBSITE AREA 11 - TPA
DATE 02-14-94
RECORDED BY B. DeANGELIS
WELL PERMIT NO.

SURFACE COMPLETION INFORMATION

TYPE OF INSTALLATION
- ☐ OPEN HOLE
- ☒ INSIDE HOLLOW STEM AUGER

TYPE OF FLUSH MOUNT
- ☒ CHRISTY BOX
- ☐
- ☐ LOCKING COVER
- ☐ WATERTIGHT CAP
- ☒ LOCKING CAP

SURFACE SEAL
- ☐ NON-SHRINKING CEMENT
- ☐ CONCRETE
- ☒ QUIKCRETE
- ☐ CHECKED FOR SETTLEMENT
- ☐ INTERNAL MORTAR ADDED

GROUND SURFACE ELEVATION
- ☒ SURVEYED
  DATE MAY 24/25, 1994

MEASURING POINT
- ☒ TOP OF WELL CASING
- ☐ GROUND SURFACE
- ☐

DRILLING INFORMATION

DRILLING COMPANY/PERSONNEL
BAYLAND DRILLING CO.
KURT VOSS
MARK BROOKE

DRILL RIG CME 75

DRILLING METHOD
- ☒ HOLLOWSTEM AUGER
- ☐ AIR ROTARY
- ☐ MUD/WATER ROTARY
- ☐

DRILLING BEGAN
DATE 02-14-94 TIME 08:15

WELL COMPLETION BEGAN
DATE 02-14-94 TIME 12:00

WELL COMPLETION FINISHED
DATE 02-14-94 TIME 13:15

DRILLING FLUID TYPE
- ☐ BENTONITE ☐ WATER
- ☐ POLYMER ☒ NONE

DRILLING FLUID LOSS
- ☐ YES GALLONS
- ☒ NO

WATER ADDED DURING COMPLETION
- ☒ YES 10 GALLONS
- ☐ NO

TOTAL FLUID LOSS TO FORMATION
10 GALLONS

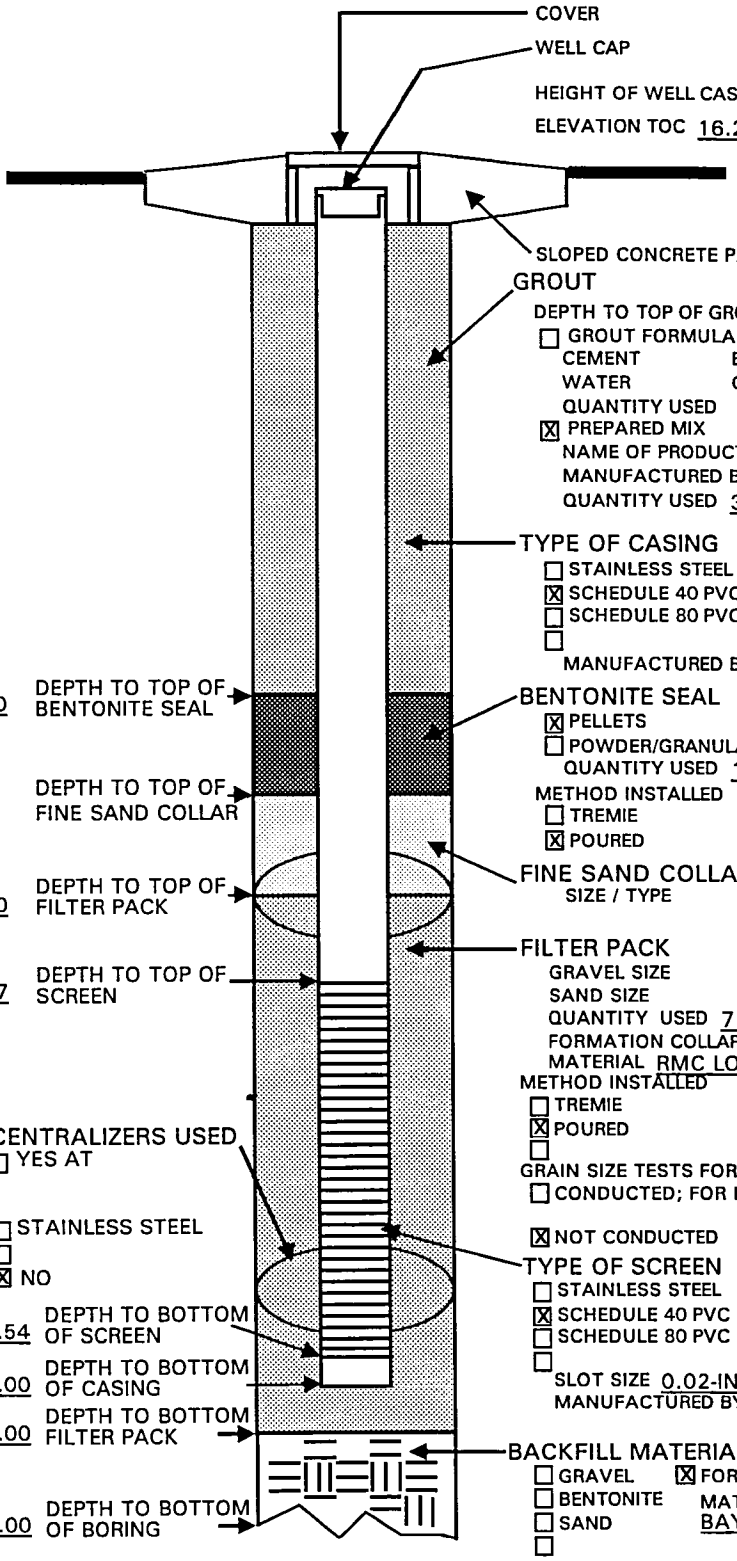

TOTAL LENGTH OF CASING AND SCREEN 25.41

DEPTH TO WATER FOLLOWING INSTALLATION (TOC) 11.55

DIAMETER OF BOREHOLE 10-INCH

NOTES:
1. SCALE: NONE
2. RECORD DEPTHS/LENGTHS IN TENTHS OF FEET, NOT IN INCHES
3. RECORD CONSTRUCTION DEPTHS BELOW GROUND LEVEL

C:\FORMS\PM_FSHIN.FRM mjb 09-04-92

PRC
ENVIRONMENTAL MANAGEMENT, INC.

MONITORING WELL INSTALLATION RECORD
FLUSH MOUNT INSTALLATION

WELL LOCATION INFORMATION

WELL NO. **MW11-56**
BOREHOLE NO. SB11-56
SITE NFD POINT MOLATE
SUBSITE AREA 11 - TPA
DATE 02-11-94
RECORDED BY A. ORTELLI
WELL PERMIT NO.

SURFACE COMPLETION INFORMATION

TYPE OF INSTALLATION
- ☐ OPEN HOLE
- ☒ INSIDE HOLLOW STEM AUGER

TYPE OF FLUSH MOUNT
- ☒ CHRISTY BOX
- ☐
- ☐ LOCKING COVER
- ☐ WATERTIGHT CAP
- ☒ LOCKING CAP

SURFACE SEAL
- ☐ NON-SHRINKING CEMENT
- ☐ CONCRETE
- ☒ QUIKCRETE
- ☐ CHECKED FOR SETTLEMENT
- ☐ INTERNAL MORTAR ADDED

GROUND SURFACE ELEVATION
- ☒ SURVEYED
  DATE MAY 24/25, 1994

MEASURING POINT
- ☒ TOP OF WELL CASING
- ☐ GROUND SURFACE
- ☐

DRILLING INFORMATION

DRILLING COMPANY/PERSONNEL
BAYLAND DRILLING CO.
KURT VOSS
JOHN MARTING

DRILL RIG CME 75

DRILLING METHOD
- ☒ HOLLOWSTEM AUGER
- ☐ AIR ROTARY
- ☐ MUD/WATER ROTARY
- ☐

DRILLING BEGAN
DATE 02-11-94 TIME 07:30

WELL COMPLETION BEGAN
DATE 02-11-94 TIME 12:30

WELL COMPLETION FINISHED
DATE 02-11-94 TIME 14:15

DRILLING FLUID TYPE
- ☐ BENTONITE ☐ WATER
- ☐ POLYMER ☒ NONE

DRILLING FLUID LOSS
- ☐ YES GALLONS
- ☒ NO

WATER ADDED DURING COMPLETION
- ☐ YES GALLONS
- ☒ NO

TOTAL FLUID LOSS TO FORMATION
GALLONS

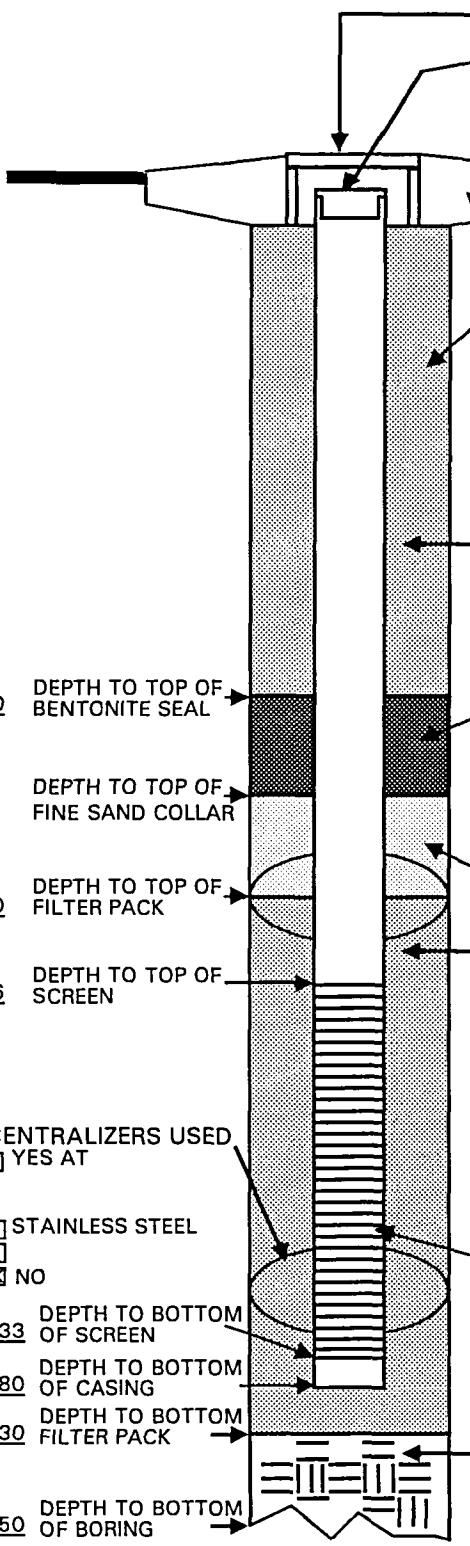

COVER
WELL CAP
HEIGHT OF WELL CASING -0.15
ELEVATION TOC 15.06
GROUND ELEVATION 15.21
SLOPED CONCRETE PAD / SURFACE SEAL

GROUT
DEPTH TO TOP OF GROUT
- ☐ GROUT FORMULA (PROPORTION OF EACH)
  CEMENT BENTONITE
  WATER OTHER
  QUANTITY USED
- ☒ PREPARED MIX
  NAME OF PRODUCT HIGH SOLIDS GROUT
  MANUFACTURED BY VOLCLAY
  QUANTITY USED 1/2 50-LB BAG

TYPE OF CASING
- ☐ STAINLESS STEEL
- ☒ SCHEDULE 40 PVC
- ☐ SCHEDULE 80 PVC
- ☐

CASING DIAMETER
INSIDE 4-INCH
OUTSIDE 4.5-INCH

MANUFACTURED BY TRILOC

BENTONITE SEAL
- ☒ PELLETS ☐ SLURRY
- ☐ POWDER/GRANULAR ☐
- QUANTITY USED 1 5-GAL BUCKET

METHOD INSTALLED
- ☐ TREMIE ☐
- ☒ POURED ☐ NOT USED

FINE SAND COLLAR (OPTIONAL)
SIZE / TYPE

FILTER PACK
GRAVEL SIZE ; TO FT.
SAND SIZE ; 5.00 TO 23.30 FT.
QUANTITY USED 7.5 100-LB BAGS
FORMATION COLLAPSE: TO FT.
MATERIAL RMC LONESTAR #3

METHOD INSTALLED
- ☐ TREMIE
- ☒ POURED
- ☐

GRAIN SIZE TESTS FOR FILTER PACK
- ☐ CONDUCTED; FOR REPORT, REFER TO
- ☒ NOT CONDUCTED

TYPE OF SCREEN
- ☐ STAINLESS STEEL
- ☒ SCHEDULE 40 PVC
- ☐ SCHEDULE 80 PVC
- ☐

SCREEN DIAMETER
INSIDE 4-INCH
OUTSIDE 4.5-INCH

SLOT SIZE 0.02-INCH (20 SLOT)
MANUFACTURED BY TRILOC

BACKFILL MATERIAL
- ☐ GRAVEL ☒ FORMATION COLLAPSE
- ☐ BENTONITE
- ☐ SAND
- ☐

MATERIAL ALLUVIUM/ BAY MUD

DEPTH TO TOP OF BENTONITE SEAL 3.50
DEPTH TO TOP OF FINE SAND COLLAR
DEPTH TO TOP OF FILTER PACK 5.00
DEPTH TO TOP OF SCREEN 7.36

CENTRALIZERS USED
- ☐ YES AT
- ☐ STAINLESS STEEL
- ☐
- ☒ NO

DEPTH TO BOTTOM OF SCREEN 22.33
DEPTH TO BOTTOM OF CASING 22.80
DEPTH TO BOTTOM FILTER PACK 23.30
DEPTH TO BOTTOM OF BORING 23.50

TOTAL LENGTH OF CASING AND SCREEN 24.64

DEPTH TO WATER FOLLOWING INSTALLATION (TOC) 10.47

DIAMETER OF BOREHOLE 10-INCH

NOTES:
1. SCALE: NONE
2. RECORD DEPTHS/LENGTHS IN TENTHS OF FEET, NOT IN INCHES
3. RECORD CONSTRUCTION DEPTHS BELOW GROUND LEVEL

C:\FORMS\PM_FSHIN.FRM mjb 09-04-92

RMC
ENVIRONMENTAL MANAGEMENT, INC.

MONITORING WELL INSTALLATION RECORD
FLUSH MOUNT INSTALLATION

WELL LOCATION INFORMATION

WELL NO. **MW11-57**
BOREHOLE NO. SB11-57
SITE NFD POINT MOLATE
SUBSITE AREA 11 - TPA
DATE 02-11-94
RECORDED BY A. ORTELLI
WELL PERMIT NO.

SURFACE COMPLETION INFORMATION

TYPE OF INSTALLATION
- ☐ OPEN HOLE
- ☒ INSIDE HOLLOW STEM AUGER

TYPE OF FLUSH MOUNT
- ☒ CHRISTY BOX
- ☐
- ☐ LOCKING COVER
- ☐ WATERTIGHT CAP
- ☒ LOCKING CAP

SURFACE SEAL
- ☐ NON-SHRINKING CEMENT
- ☐ CONCRETE
- ☒ QUIKCRETE
- ☐ CHECKED FOR SETTLEMENT
- ☐ INTERNAL MORTAR ADDED

GROUND SURFACE ELEVATION
- ☒ SURVEYED
  DATE MAY 24/25, 1994

MEASURING POINT
- ☒ TOP OF WELL CASING
- ☐ GROUND SURFACE
- ☐

DRILLING INFORMATION

DRILLING COMPANY/PERSONNEL
BAYLAND DRILLING CO.
KURT VOSS
JOHN MARTING

DRILL RIG

DRILLING METHOD
- ☒ HOLLOWSTEM AUGER
- ☐ AIR ROTARY
- ☐ MUD/WATER ROTARY
- ☐

DRILLING BEGAN
DATE 02-10-94 TIME 12:40

WELL COMPLETION BEGAN
DATE 02-11-94 TIME 15:30

WELL COMPLETION FINISHED
DATE 02-11-94 TIME 16:25

DRILLING FLUID TYPE
- ☐ BENTONITE ☐ WATER
- ☐ POLYMER ☒ NONE

DRILLING FLUID LOSS
- ☐ YES GALLONS
- ☒ NO

WATER ADDED DURING COMPLETION
- ☒ YES 15 GALLONS
- ☐ NO

TOTAL FLUID LOSS TO FORMATION
15 GALLONS

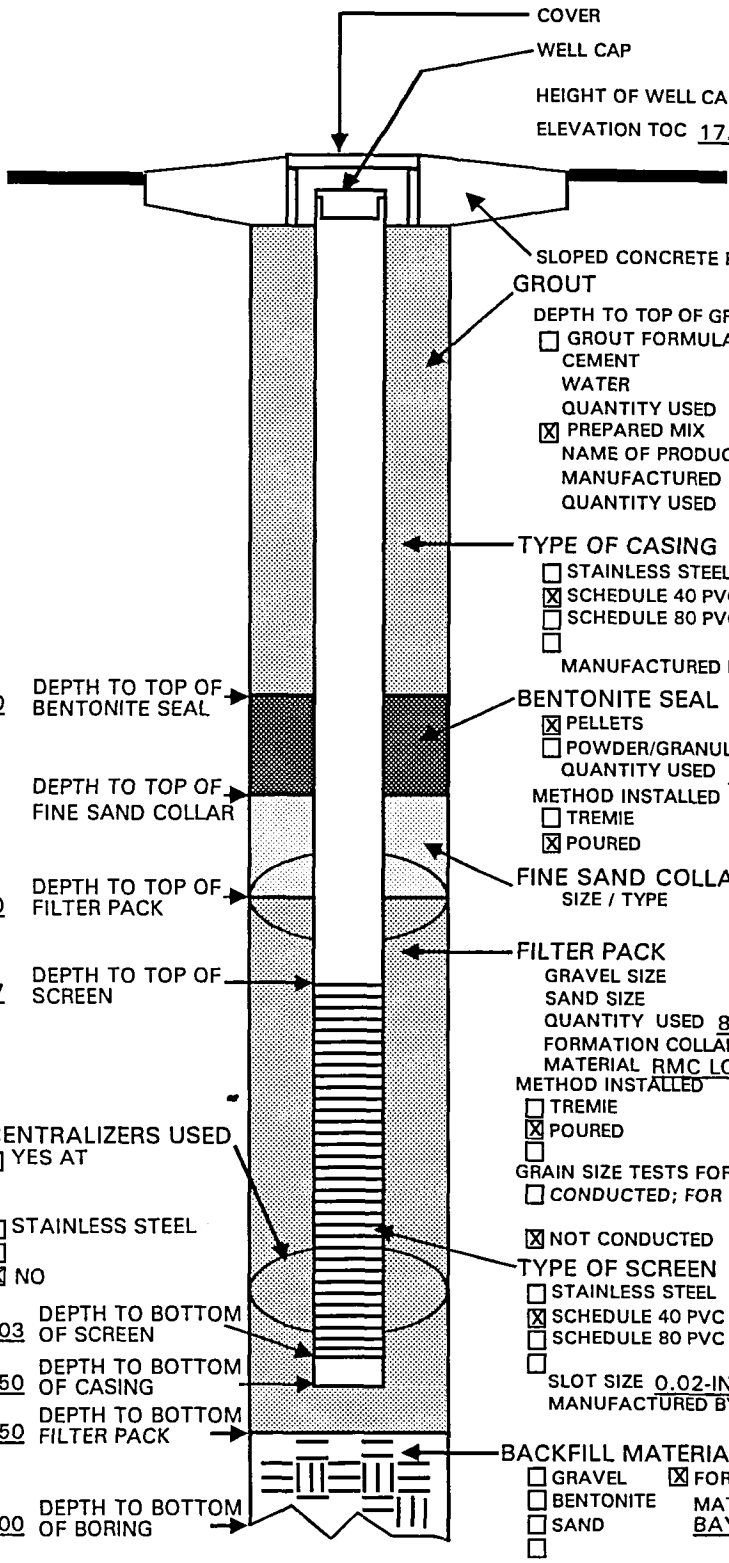

TOTAL LENGTH OF CASING AND SCREEN 25.42

DEPTH TO WATER FOLLOWING INSTALLATION (TOC) 13.23

DIAMETER OF BOREHOLE 10-INCH

NOTES:
1. SCALE: NONE
2. RECORD DEPTHS/LENGTHS IN TENTHS OF FEET, NOT IN INCHES
3. RECORD CONSTRUCTION DEPTHS BELOW GROUND LEVEL

C:\FORMS\PM_FSHIN.FRM mjb 09-04-92

APPENDIX F

MONITORING WELL DEVELOPMENT DATA SHEETS

PRC Environmental Management, Inc.

WELL DEVELOPMENT DATA SHEET

BORING NO. _____ WELL NO. MW10-02 Sheet 1 of 1

Project PT. McLATE
Project No. _____
Date(s) of Installation _____
Date(s) of Development 3/8 3/9 3/10 3/17 3/17 3/18 3/20 3/22 3/23 3/24 3/28
Personnel/Company B. Angelis, B. Schuller
Type of Rig Used _____

Casing Diameter/Type 4"
Borehole Diameter 10"
Screened Interval(s) _____
Total Length of Well Casing _____
Measured Total Depth (TOC) Initial 9.92 Final _____
Initial Depth to Water (TOC) 7.60 Date 3/8/94 Time 1120
Stabilized Depth to Water (TOC) _____ Date _____ Time _____

DEVELOPMENT

TECHNIQUE(S) EQUIPMENT TYPE/CAPACITY

___ Jetting (Airlift) _____
___ Surge Block _____
✓ Bailing 3/9 3/10
✓ Pumping _____
___ Other _____

PURGE VOLUME CALCULATION

Casing Volume:
2.32 Ft. of water x 0.65 Gallons/Foot
= 1.508 Gallons per Single Casing Volume

Sand Pack Volume:
2.32 Ft. of Saturated Sand Pack
x 4 Gallons/Foot (borehole diameter) (10" borehole)
= 9.28 Gallons (in borehole)
- 1.508 Gallons of Casing Vol. for Saturated Interval
= 7.772 x 0.3 (assuming porosity = 30%)
= 2.332 Gallons Within Sand Pack

Single Purge Volume: 3.84 Gallons (Casing Vol. + Sand Pack Vol. + Fluids Added)
Minimum Purge Volume: 19.2 Gallons
Actual Purge Volume: _____ Gallons
Volume Measured by: _____
Rate of Development _____ Gallons/Minute (Hour,Day)
Pumping Rate/Depth _____ @ _____ Ft. (Below Grd.)
Immiscible Phases Present: Y (N) Thickness _____
Calibration Date _____ See Sheet _____ of _____

FLUIDS ADDED

Lost Drilling Fluid: _____ Gallons
Lost Purge Water: _____ Gallons
Water During Installation: _____ Gallons
Total Fluids Added: _____ Gallons
Source of Added Water: _____
Parameters of Added Water Measured: Y N
Sample Collected of Added Water: Y N
Sample Designation of Added Water: _____

INSTRUMENT CALIBRATION

pH Meter: _____ Spec. Conductance Meter: _____
pH 4.0 = _____ @ _____ °C Standard _____ µmhos/cm@ 25°C
pH 7.0 = _____ @ _____ °C Reading _____ µmhos/cm @ _____ °C
pH 10.0 = _____ @ _____ °C Turbidity Meter: _____
Dissolved Oxygen Meter: _____ Other: _____

	Total Volume Discharged	Rate of Discharge	Time	Temp	pH	Specific* Conductance	Turbidity or D.O.	Clarity, Odor / PID Readings, Other:
3/8/94	3.5	pumped	1130	16.9	6.87	1.65	104 T 4.74	0.01 sal. FAIRLY clear grey, HC odor, pumped
3/9/94	2.56.0	Bailed	1745 1545	15.4	7.09	0.348	T 499 3.43	.01 sal - mod. turbid DR grey - v. slt HC odor
3/10/94	2.080	Bailed	0845	15.4	6.81	0.362	949 4.54	.01 sal - mod. turbid grey Bailed dry
3/14/94	10.0	"	0810	15.3	6.91	0.470	T 831 4.21	0.0296 sal slt. HC sheen Fairly clear. Baled Dry
3/17/94	12.0	"	0808	14.8	6.52	0.335	T 501 4.30	0.01% sal / v. slt. HC sheen Fairly clear / Baled DRY
3/18/94	13.0	Bailed Dry	1125	16.5	6.65	0.295	T 437 DO 5.24	0.01% sal as above. No visible HC shen.
3/20/94	14.0	Bailed Dry	1300	17.7	6.60	0.298	T 151 DO 9.60	0.01% sal cloudy, grey, slt. Sheen
3/22/94	14.5 ~~15.0~~	"	1025	17.4	6.49	0.293	T 231 DO 8.78	0.01% sal Above
3/23/94	15.0	"	1035	NO parameters taken				as Above
3/24/94	16.0	" Dry	1710	17.6	6.12	0.289	T 202 DO 5.41	0.01% sal as Above

Development Completed at 17.2 gal Gallons Discharged. Date: 3/28/94 Time: 0820

Criteria: Volume reached Personnel: J Gould / G Kerson

* Specific Conductance readings temperature compensated to 25°C, if not, report temperatures at which reading obtained.

Additional data on back

MW10-02

Date	Volume Purged	Rate	Time	Temp	pH	cond	Turb.	DO
3/28	17.2 gal	Bailed ~~dry~~ 5b	0820	16.3	6.13	.269	Clear	4.73
3/28	19.2 gal	Bailed dry	0850	16.5	6.25	.291	clear/gray	N/A

Development completed. Sheen & odor w/ H_2O
No silt on bottom of well. *firm bottom Water was clear (free of suspended sed.).

PRC Environmental Management, Inc.

WELL DEVELOPMENT DATA SHEET

BORING NO. _____ WELL NO. MW10-03 Sheet 1 of 1

Project _____
Project No. _____
Date(s) of Installation _____
Date(s) of Development 3/7/94 3/8 3/11
Personnel/Company B. DeAngelis, B. Schuller
Type of Rig Used _____

Casing Diameter/Type 4"
Borehole Diameter 10"
Screened Interval(s) _____
Total Length of Well Casing _____
Measured Total Depth (TOC) Initial 19.82
DTP - 15.0 Final _____
Initial Depth to Water (TOC) 16.81 Date 3/8/94 Time 1600
Stabilized Depth to Water (TOC) _____ Date _____ Time _____

3/8/94 0830 18.10 DTP
18.98 DTW

DEVELOPMENT

TECHNIQUE(S)	EQUIPMENT TYPE/CAPACITY
___ Jetting (Airlift)	
___ Surge Block	
✓ Bailing	4" Stainless Steel
___ Pumping	
___ Other	

PURGE VOLUME CALCULATION

Casing Volume:
4.82 Ft. of water x .65 Gallons/Foot
= 3.13 Gallons per Single Casing Volume

Sand Pack Volume:
4.82 Ft. of Saturated Sand Pack
4 x ~~4.2~~ Gallons/Foot (borehole diameter)
19.2 ~~9~~ = ~~37.8~~ Gallons (in borehole)
- 3.13 Gallons of Casing Vol. for Saturated Interval
= 16.2 x 0.3 (assuming porosity = 30%)
= 4.85 Gallons Within Sand Pack

FLUIDS ADDED

Lost Drilling Fluid: _____ Gallons
Lost Purge Water: _____ Gallons
Water During Installation: _____ Gallons
Total Fluids Added: _____ Gallons
Source of Added Water: 0
Parameters of Added Water Measured: Y N
Sample Collected of Added Water: Y N
Sample Designation of Added Water: _____

Single Purge Volume: 7.8 Gallons (Casing Vol. + Sand Pack Vol. + Fluids Added)
Minimum Purge Volume: 40 Gallons
Actual Purge Volume: 10 Gallons Mostly product
Volume Measured by: _____
Rate of Development _____ Gallons/Minute (Hour,Day)
Pumping Rate/Depth _____ @ ____ Ft. (Below Grd.)
Immiscible Phases Present: (Y) N Thickness 1.81
Calibration Date 3/8/94 See Sheet ____ of ____

INSTRUMENT CALIBRATION - Horiba Auto Calibration 1 Std. Sol.
pH Meter: _____ Spec. Conductance Meter: _____
pH 4.0 = _____ @ _____ °C Standard _____ µmhos/cm@ 25°C
pH 7.0 = _____ @ _____ °C Reading _____ µmhos/cm @ _____ °C
pH 10.0 = _____ @ _____ °C Turbidity Meter: _____
Dissolved Oxygen Meter: _____ Other: PID - 174 ppm

	Total Volume Discharged	Rate of Discharge	Time	Temp	pH	Specific* Conductance	Turbidity or D.O.	Clarity, Odor PID Readings, Other:
3/8/94	6 gal	Bailed	1615	No parameters taken				Bailed - Mostly dk. brown fuel. Not much water
3/11/94	2.5 gal	"	0815		" Mostly fuel. ~ 80% water			90% fuel. No
	8.5 (total)		apparent immiscible phase. Fuel is dark brown, thin, not viscous					
3/12/94	10	Bailed	1605	— All diesel — No Water ∴ Will not				
				continue to develop.				

Development Completed at _____ Gallons Discharged. Date: _____ Time: _____

Criteria: _____ Personnel: _____

* Specific Conductance readings temperature compensated to 25°C, if not, report temperatures at which reading obtained.

PRC Environmental Management, Inc.

Weather: Hot and Sunny (3/7/94)

WELL DEVELOPMENT DATA SHEET

BORING NO. _____ WELL NO. MW10-04 Sheet 1 of 1

Project _____
Project No. _____
Date(s) of Installation _____
Date(s) of Development ~~3/7/94~~ 3/7/94 ~~3/8~~
Personnel/Company B. DeAngelis
B. Schullem
Type of Rig Used _____

Casing Diameter/Type 4"
Borehole Diameter 10"
Screened Interval(s) _____
Total Length of Well Casing _____
Measured Total Depth (TOC) Initial 21.15
Final _____

Initial Depth to Water (TOC) 16.05 Date 3/7/94 Time 1210
Stabilized Depth to Water (TOC) _____ Date _____ Time _____

DEVELOPMENT

TECHNIQUE(S) EQUIPMENT TYPE/CAPACITY

___ Jetting (Airlift) _____
___ Surge Block _____
___ ~~Bailing~~
✓ Pumping Series 7090 Grundfos Pump
___ Other _____

PURGE VOLUME CALCULATION

Casing Volume:
5.1 Ft. of water x .65 Gallons/Foot
= 3.32 Gallons per Single Casing Volume

Sand Pack Volume:
5.1 Ft. of Saturated Sand Pack
x 4 Gallons/Foot (borehole diameter)
= 20.4 Gallons (in borehole)
- 3.32 Gallons of Casing Vol. for Saturated Interval
= 17.1 x 0.3 (assuming porosity = 30%)
= 5.12 Gallons Within Sand Pack

Single Purge Volume: 8.44 Gallons (Casing Vol. + Sand Pack Vol. + Fluids Added)
Minimum Purge Volume: 42 Gallons
Actual Purge Volume: 42 Gallons
Volume Measured by: 5 gallon bucket
Rate of Development _____ Gallons/Minute (Hour,Day)
Pumping Rate/Depth _____ @ ____ Ft. (Below Grd.)
Immiscible Phases Present: Y (N) Thickness _____
Calibration Date 3/7/94 See Sheet ____ of ____

FLUIDS ADDED

Lost Drilling Fluid: _____ Gallons
Lost Purge Water: _____ Gallons
Water During Installation: _____ Gallons
Total Fluids Added: 0 Gallons
Source of Added Water: _____
Parameters of Added Water Measured: Y N
Sample Collected of Added Water: Y N
Sample Designation of Added Water: _____

INSTRUMENT CALIBRATION - Horiba Std. Sol

pH Meter: _____ Spec. Conductance Meter: _____
pH 4.0 = _____ @ _____ °C Standard _____ µmhos/cm@ 25°C
pH 7.0 = _____ @ _____ °C Reading _____ µmhos/cm @ _____ °C
pH 10.0 = _____ @ _____ °C Turbidity Meter: _____
Dissolved Oxygen Meter: _____ Other: PID 5.5
PID Calibrated 3/7/94 100 ppm Isobutylene Reading:

Total Volume Discharged	Rate of Discharge	Time	°C Temp	pH	Specific* Conductance	Turbidity or D.O.	Clarity, Odor PID Readings, Other:
3/7/94 10		12:20	18.3	7.80	8.98 mS/cm	999-T 5.69-DO	Sal - 0.49 Hydrocarbon Sheen, Slight odor
15		12:31	18.7	7.77	9.65 "	999-T 5.75-DO	Sal - 0.53 color - Gray Hydrocarbon Sheen, Slight odor
20		12:40	18.9	7.80	9.54	688-T 5.45-DO	Sal - 0.52 Slight clearing ~~Slr~~ oil Still present
30		12:55	18.7	7.80	9.30	726-T 5.46-DO	0.52 - % sal clearing
35		1305	19°C	7.80	9.50	195-T 5.15-DO	0.52 - % sal - much clearer, Slight oil,
42		1317	18.8	7.87	9.26	150-T 4.90-DO	0.51 - % sal
~~3/8/94~~							
		42					

Development Completed at ~~3/7/94~~ 42 Gallons Discharged. Date: 3/7/94 Time: 1317
Criteria: Stable Chemistry / Sufficient Discharge Personnel: Fred Pellegrino

* Specific Conductance readings temperature compensated to 25°C, if not, report temperatures at which reading obtained.

PRC Environmental Management, Inc.

WELL DEVELOPMENT DATA SHEET

BORING NO. _____ WELL NO. MW10-05 Sheet ___ of ___

Project _____
Project No. _____
Date(s) of Installation _____
Date(s) of Development 3/5/94 - 3/7/94 (3/8 - 3/9, 3/10)
Personnel/Company B. DeFrancis, B. Schuller
Type of Rig Used _____

Casing Diameter/Type 4"
Borehole Diameter 10"
Screened Interval(s) _____
Total Length of Well Casing _____
Measured Total Depth (TOC) Initial 19.50 Final _____
Initial Depth to Water (TOC) 16.42 Date 3/5/94 Time 1338
Stabilized Depth to Water (TOC) _____ Date _____ Time _____

DEVELOPMENT

TECHNIQUE(S)	EQUIPMENT TYPE/CAPACITY
___ Jetting (Airlift)	
___ Surge Block	
✓ Bailing	3/9 · 3/10 · 3/12 · 3/14
✓ Pumping	3/5 · 3/7 · 3/8 · 3/7
___ Other	

PURGE VOLUME CALCULATION

Casing Volume:
3.38 Ft. of water x .65 Gallons/Foot
= 2.19 Gallons per Single Casing Volume

Sand Pack Volume:
3.38 Ft. of Saturated Sand Pack
x 4.0 Gallons/Foot (borehole diameter)
= 13.5 Gallons (in borehole)
- 2.19 Gallons of Casing Vol. for Saturated Interval
= 11.3 x 0.3 (assuming porosity = 30%)
= 3.4 Gallons Within Sand Pack

Single Purge Volume: 5.6 Gallons (Casing Vol. + Sand Pack Vol. + Fluids Added)
Minimum Purge Volume: 28 Gallons
Actual Purge Volume: 37 Gallons
Volume Measured by: 5 gallon bucket
Rate of Development _____ Gallons/Minute (Hour,Day)
Pumping Rate/Depth _____ @ ____ Ft. (Below Grd.)
Immiscible Phases Present: Y (N) Thickness _____
Calibration Date _____ See Sheet ____ of ____

FLUIDS ADDED

Lost Drilling Fluid: _____ Gallons
Lost Purge Water: _____ Gallons
Water During Installation: _____ Gallons
Total Fluids Added: _____ Gallons
Source of Added Water: _____
Parameters of Added Water Measured: Y N
Sample Collected of Added Water: Y N
Sample Designation of Added Water: _____

INSTRUMENT CALIBRATION

Auto-Cal 3/14 a.m. Horiba
pH Meter: Calibrated daily Spec. Conductance Meter: _____
pH 4.0 = _____ @ ____ °C Standard _____ µmhos/cm@ 25°C
pH 7.0 = _____ @ ____ °C Reading _____ µmhos/cm @ ____ °C
pH 10.0 = _____ @ ____ °C Turbidity Meter: _____
Dissolved Oxygen Meter: _____ Other: _____

Total Volume Discharged	Rate of Discharge	Time	°C Temp	pH	Specific* mS/cm Conductance	Turbidity or D.O.	Clarity, Odor PID Readings, Other:
3/5/94 5 gal	pumped	1347	17.8	7.52	14.50	T 999 3.80	0.81 gal Pumped Dry
3/7/94 1140 10 gal	" pumped	Dry					~~0.81 gal~~
3/8/94 15 gal	"	1036	16.7	7.24	14.0	35.7 (T) 5.90 (DO)	0.81 gal Slight silt in well Pump Dry
3/9/94 20	Bailed	1730	16.0	7.33	13.8	1999 4.78	0.75 gal mod. Turb. b.d - Bailed Dry
3/10/94 24	Bailed	0839	15.9	7.40	15.0	T921 6.19	0.90 gal Bailed Dry, clearing, silty turbidity
3/12/94 27	Bailed	1758	17.0	7.30	18.2 mS/cm	534-T 4.1-DO	1.08 gal silty & cloudy
3/14/94 31	Bailed	0853	16.5	7.38	19.4	999-T 6.74-DO	1.16 gal cloudy, silty - 1st bail clean, top of well

Development Completed at 31 Gallons Discharged. Date: 3/14/94 Time: 0853
Criteria: 5x (casing + borehole) volumes Removed Personnel: [illegible]

* Specific Conductance readings temperature compensated to 25°C, if not, report temperatures at which reading obtained.

PRC Environmental Management, Inc.

WELL DEVELOPMENT DATA SHEET

BORING NO. _____ WELL NO. MW10-08 Sheet 1 of 2

Project _____
Project No. _____
Date(s) of Installation _____
Date(s) of Development 3/5/94 - 3/7/94/3-8
Personnel/Company A. Dalzell, M. Donahue, B. Schuller
Type of Rig Used _____

3/8/94 - Turbidity water malfunctioning

Casing Diameter/Type _____
Borehole Diameter _____
Screened Interval(s) _____
Total Length of Well Casing _____
Measured Total Depth (TOC) Initial 10.3
Final _____

Initial Depth to Water (TOC) 24.96 Date 3/5/94 Time 1145
Stabilized Depth to Water (TOC) _____ Date _____ Time _____

DEVELOPMENT

TECHNIQUE(S) EQUIPMENT TYPE/CAPACITY

____ Jetting (Airlift) _____
____ Surge Block _____
____ Bailing _____
____ Pumping _____
____ Other _____

PURGE VOLUME CALCULATION

Casing Volume:
14.6 Ft. of water x .65 Gallons/Foot
= 9.53 Gallons per Single Casing Volume

Sand Pack Volume:
14.6 Ft. of Saturated Sand Pack
x 4.0 Gallons/Foot (borehole diameter)
= 58.4 Gallons (in borehole)
- 9.53 Gallons of Casing Vol. for Saturated Interval
= 48.9 x 0.3 (assuming porosity = 30%)
= 14.6 Gallons Within Sand Pack

Single Purge Volume: 24.2 Gallons (Casing Vol. + Sand Pack Vol. + Fluids Added)
Minimum Purge Volume: 120 Gallons
Actual Purge Volume: _____ Gallons
Volume Measured by: _____
Rate of Development _____ Gallons/Minute (Hour,Day)
Pumping Rate/Depth _____ @ _____ Ft. (Below Grd.)
Immiscible Phases Present: Y N Thickness _____
Calibration Date _____ See Sheet _____ of _____

FLUIDS ADDED

Lost Drilling Fluid: _____ Gallons
Lost Purge Water: _____ Gallons
Water During Installation: _____ Gallons
Total Fluids Added: _____ Gallons
Source of Added Water: _____
Parameters of Added Water Measured: Y N
Sample Collected of Added Water: Y N
Sample Designation of Added Water: _____

INSTRUMENT CALIBRATION

3/5/94 pH Meter: Horiba
pH 4.0 = 3.95 @ 15.6°C
pH 7.0 = _____ @ _____ °C
pH 10.0 = _____ @ _____ °C
Dissolved Oxygen Meter: 10.13
Spec. Conductance Meter: _____
Standard 4.44 µmhos/cm@ 25°C
Reading _____ µmhos/cm @ _____ °C
Turbidity Meter: _____
Other: PID - 8.8 ppm

Total Volume Discharged	Rate of Discharge	Time	Temp	pH	Specific* mS/cm Conductance	Turbidity or D.O.	Clarity, Odor PID Readings, Other:
3/5/94 10 gal		1205	17.2	7.24	1.91	T 999 2.77	.04 ppm Mod. Turbid yellowish Brn 5.14
" 20		1211	17.2	7.11	1.77	T 5.90 1.29	.08 ppm Pumped Dry @ 22 gal
" 22 gal - pumped Dry							
3/7/94 32		11:10	18.1	7.06	1.34	T 999 DO 5.52	0.06 ppm
" 37 - Pumped Dry							
3/8/94 47		1020	17.4	7.01	1.39	-10 T DO 5.4	1st 5 gal - mod. turbid. then fairly clear 0.6 ppm
" 49 - pumped dry		1025					
3/10/94 Will not be part of Quarterly sampling. Did not complete development back D.							

Development Completed at _____ Gallons Discharged. Date: _____ Time: _____

Criteria: _____ Personnel: _____

* Specific Conductance readings temperature compensated to 25°C, if not, report temperatures at which reading obtained.

Continued on next page

PRC Environmental Management, Inc.

WELL DEVELOPMENT DATA SHEET

BORING NO. _____ WELL NO. MW10-08 Sheet 2 of 2

Project _____
Project No. _____
Date(s) of Installation _____
Date(s) of Development 3/17 3/18 3/20 3/21
Personnel/Company B. DiAngelis, B. Schuller
Type of Rig Used _____

Casing Diameter/Type _____
Borehole Diameter _____
Screened Interval(s) _____
Total Length of Well Casing _____
Measured Total Depth (TOC) Initial _____ Final _____

Initial Depth to Water (TOC) 10.9 Date 3/17/94 Time 1530
Stabilized Depth to Water (TOC) _____ Date _____ Time _____

3/18/94 DTW 14.4

DEVELOPMENT

TECHNIQUE(S)	EQUIPMENT TYPE/CAPACITY
___ Jetting (Airlift)	
___ Surge Block	
✓ Bailing	3/17 /
✓ Pumping	~~3/19 Peristaltic Pump~~ BWO
___ Other	

PURGE VOLUME CALCULATION

Casing Volume:
_____ Ft. of water x _____ Gallons/Foot
= _____ Gallons per Single Casing Volume

Sand Pack Volume:
_____ Ft. of Saturated Sand Pack
x _____ Gallons/Foot (borehole diameter)
= _____ Gallons (in borehole)
- _____ Gallons of Casing Vol. for Saturated Interval
= _____ x 0.3 (assuming porosity = 30%)
= _____ Gallons Within Sand Pack

FLUIDS ADDED

Lost Drilling Fluid: _____ Gallons
Lost Purge Water: _____ Gallons
Water During Installation: _____ Gallons
Total Fluids Added: _____ Gallons
Source of Added Water: _____
Parameters of Added Water Measured: Y N
Sample Collected of Added Water: Y N
Sample Designation of Added Water: _____

Single Purge Volume: _____ Gallons (Casing Vol. + Sand Pack Vol. + Fluids Added)
Minimum Purge Volume: _____ Gallons
Actual Purge Volume: _____ Gallons
Volume Measured by: _____
Rate of Development _____ Gallons/Minute (Hour,Day)
Pumping Rate/Depth _____ @ ____ Ft. (Below Grd.)
Immiscible Phases Present: Y N Thickness _____

INSTRUMENT CALIBRATION

Calibration Date _____ See Sheet ____ of ____
pH Meter: _____ Spec. Conductance Meter: _____
pH 4.0 = _____ @ _____ °C Standard _____ µmhos/cm@ 25°C
pH 7.0 = _____ @ _____ °C Reading _____ µmhos/cm @ _____ °C
pH 10.0 = _____ @ _____ °C Turbidity Meter: _____
Dissolved Oxygen Meter: _____ Other: _____

	Total Volume Discharged	Rate of Discharge	Time	Temp °C	pH	Specific* Conductance	Turbidity or D.O.	Clarity, Odor PID Readings, Other:
3/17/94	54	Bailed	1640	16.0	7.20	1.59	T 999 4.12 DO	0.07% Sol Sed. Turbid. brown
	64	"	1643	16.9	6.97	1.58	T 999 5.12 DO	0.06% Sol as above
3/18/94	69	"	1150	17.5	6.98	1.61	T 999 6.41 DO	0.07% Sol V. Turbid / Bailed Dry
3/18/94 BWO	79	"	1355	17.8	6.77	1.25	T 999 6.44 DO	0.05% Sol Silty brown
	86	"	1400	17.8	6.87	1.31	T 999 6.56 DO	0.06% Sol V. Silty brown
3/20/94	96	"	1224	17.3	6.69	1.25	T 999 6.65 DO	0.05% Sol V. Silty brown
	105	"	1220	17.7	6.42	1.32	T 999 6.20 DO	0.06% Sol V. Silty brown
3/21/94	115	"	1717	16.4	6.94	1.23	T 999 5.96 DO	0.04% Sol V. Silty brown
	120		1720	16.4	7.04	1.27	T 999 6.33 DO	0.05% Sol V. brown silty

Development Completed at 120 Gallons Discharged. Date 3/21/94 Time: 1726
Criteria: 5x (Casing Vol. + boring Vol.) Personnel: B. Schuller

* Specific Conductance readings temperature compensated to 25°C, if not, report temperatures at which reading obtained.

PRC Environmental Management, Inc.

WELL DEVELOPMENT DATA SHEET

BORING NO. _____ WELL NO. MW10-09 Sheet 1 of 2

3/8 - pumped
3/9 bailed
3/10 - Bailed
3/14 "

Project _____
Project No. _____
Date(s) of Installation _____
Date(s) of Development 3/5/94 3/7/94
Personnel/Company Barth DeAngelis, M. Donahue, B. Schuller
Type of Rig Used _____

Casing Diameter/Type 4" I.D.
Borehole Diameter 10"
Screened Interval(s) _____
Total Length of Well Casing _____
Measured Total Depth (TOC) Initial 20.67
Final _____

Initial Depth to Water (TOC) 7.63 Date 3/5/94 Time 1025
Stabilized Depth to Water (TOC) _____ Date _____ Time _____

DEVELOPMENT

TECHNIQUE(S)	EQUIPMENT TYPE/CAPACITY
___ Jetting (Airlift)	
___ Surge Block	
✓ Bailing	3/9, 3/10, 3/14
✓ Pumping	40gal J/Guzzler 3/5 3/7/3/8
___ Other	

PURGE VOLUME CALCULATION

Casing Volume:
13.04 Ft. of water x .65 Gallons/Foot
= 8.48 Gallons per Single Casing Volume

Sand Pack Volume:
13.04 Ft. of Saturated Sand Pack
x 4 Gallons/Foot (borehole diameter)
= 52.16 Gallons (in borehole)
- 8.48 Gallons of Casing Vol. for Saturated Interval
= 43.68 x 0.3 (assuming porosity = 30%)
= 13.10 Gallons Within Sand Pack

Single Purge Volume: 21.58 Gallons (Casing Vol. + Sand Pack Vol. + Fluids Added)
Minimum Purge Volume: 107.9 Gallons
Actual Purge Volume: _____ Gallons
Volume Measured by: _____
Rate of Development _____ Gallons/Minute (Hour,Day)
Pumping Rate/Depth _____ @ _____ Ft. (Below Grd.)
Immiscible Phases Present: Y N Thickness _____
Calibration Date _____ See Sheet _____ of _____

FLUIDS ADDED

Lost Drilling Fluid: _____ Gallons
Lost Purge Water: _____ Gallons
Water During Installation: _____ Gallons
Total Fluids Added: _____ Gallons
Source of Added Water: _____
Parameters of Added Water Measured: Y N
Sample Collected of Added Water: Y N
Sample Designation of Added Water: _____

INSTRUMENT CALIBRATION

3/14 Cal - Std Sol BS

pH Meter: Horiba
pH 4.0 = 3.98 @ 15.6 °C
pH 7.0 = _____ @ _____ °C
pH 10.0 = _____ @ _____ °C
Dissolved Oxygen Meter: 10.13
Spec. Conductance Meter: _____
Standard 4.49 µmhos/cm@ 25°C
Reading _____ µmhos/cm @ _____ °C
Turbidity Meter: _____
Other: PID - 7 ppm.

	Total Volume Discharged	Rate of Discharge	Time	°C Temp	pH	Specific* Conductance	Turbidity or D.O.	Clarity, Odor PID Readings, Other:
3/5	10gal	pumped	1135	16.9	7.23	1.34 ms/cm	T 375 5.00	.06 % Sal Mod. Turbid - BRN Silt Pumped Dry
3/7	20gal		1030	17.3	7.24	1.13 "	66 (T) 6.12 (DO)	Sal = 0.05
	22gal	— pumped dry						
3/8/94	32 gal		0951	16.3	6.36	1.16	11 (T) 5.90 (DO)	Silty w/ first few pums then clear Sal-0.05%
	40 gal		0959	17.0	6.95	1.15	571 (T) 4.62 (DO)	Clear, But silty (very) near end - pump dry 0.052 Sal
3/9/94	50gal	Bailed	1705	16.2	6.94	1.00	T-994 6.40	.047% Sal Mod. Silty BRN
	57gal		1712		Bailed	Dry		
3/10/94	67		0805	16.0	6.92	.958	T 999 6.59	.04% Sal Mod. Silty - BRN
3/10/94	72		0813		Bailed	Dry		

Development Completed at _____ Gallons Discharged. Date: _____ Time: _____

Criteria: _____ Personnel: _____

* Specific Conductance readings temperature compensated to 25°C, if not, report temperatures at which reading obtained.

Continued on PAGE 2

PRC Environmental Management, Inc.

WELL DEVELOPMENT DATA SHEET

BORING NO. _____ WELL NO. MW10-09 Sheet 2 of 2

Project _____
Project No. _____
Date(s) of Installation _____
Date(s) of Development 3/14 3/15
Personnel/Company _____
Type of Rig Used _____

Casing Diameter/Type _____
Borehole Diameter _____
Screened Interval(s) _____
Total Length of Well Casing _____
Measured Total Depth (TOC) Initial _____
Final _____
Initial Depth to Water (TOC) _____ Date _____ Time _____
Stabilized Depth to Water (TOC) _____ Date _____ Time _____

DEVELOPMENT

TECHNIQUE(S) EQUIPMENT TYPE/CAPACITY

____ Jetting (Airlift) _____
____ Surge Block _____
✓ Bailing _____
____ Pumping _____
____ Other _____

PURGE VOLUME CALCULATION

Casing Volume:
_____ Ft. of water x _____ Gallons/Foot
= _____ Gallons per Single Casing Volume

Sand Pack Volume:
_____ Ft. of Saturated Sand Pack
x _____ Gallons/Foot (borehole diameter)
= _____ Gallons (in borehole)
- _____ Gallons of Casing Vol. for Saturated Interval
= _____ x 0.3 (assuming porosity = 30%)
= _____ Gallons Within Sand Pack

Single Purge Volume: _____ Gallons (Casing Vol. + Sand Pack Vol. + Fluids Added)
Minimum Purge Volume: _____ Gallons
Actual Purge Volume: 108 Gallons
Volume Measured by: _____
Rate of Development _____ Gallons/Minute (Hour,Day)
Pumping Rate/Depth _____ @ ____ Ft. (Below Grd.)
Immiscible Phases Present: Y N Thickness _____

FLUIDS ADDED

Lost Drilling Fluid: _____ Gallons
Lost Purge Water: _____ Gallons
Water During Installation: _____ Gallons
Total Fluids Added: _____ Gallons
Source of Added Water: _____
Parameters of Added Water Measured: Y N
Sample Collected of Added Water: Y N
Sample Designation of Added Water: _____

INSTRUMENT CALIBRATION Horiba

Calibration Date 3/15/94 See Sheet ____ of ____
pH Meter: _____ Spec. Conductance Meter: _____
pH 4.0 = _____ @ ____ °C Standard _____ µmhos/cm@ 25°C
pH 7.0 = _____ @ ____ °C Reading _____ µmhos/cm @ ____ °C
pH 10.0 = _____ @ ____ °C Turbidity Meter: _____
Dissolved Oxygen Meter: _____ Other: _____

Total Volume Discharged	Rate of Discharge	Time	Temp	pH	Specific* Conductance	Turbidity or D.O.	Clarity, Odor PID Readings, Other:
3/14/94 82	Bailed	0800	16.3	6.71	1.09	T-999 5.33	0.04% sal moderately brn
" 88	"	0803	16.6	6.97	1.00	T-999 3.59 DO	0.04% sal as above, Bailed Dry
3/15/94 0.3	"	0957	16.5	6.78	1.04	T-999 DO 7.07	0.04% sal moderate brown silt
" 98	"	1000	16.5	6.88	0.987	T-999 DO 6.50	0.04% sal as above, more silt
" 103	"	1005	16.6	7.05	1.02	T-999 DO 6.63	0.04% sal
		1040	let well recharge for 35 minutes				
" 108	"	1043	16.5	7.01	1.01	T-999 DO 6.41	0.04% sal as above

Development Completed at 108 Gallons Discharged. Date: 3/15/94 Time: 0743

Criteria: _____ Personnel: _____

* Specific Conductance readings temperature compensated to 25°C, if not, report temperatures at which reading obtained.

PRC Environmental Management, Inc.

WELL DEVELOPMENT DATA SHEET

BORING NO. _____ WELL NO. MW 10-10 Sheet ___ of ___

Project _____
Project No. _____
Date(s) of Installation _____
Date(s) of Development 3/4/94 / 3-5/7/8
Personnel/Company Barb D. / Megan Dowhe / Brian Schuller
Type of Rig Used _____

Casing Diameter/Type 4"
Borehole Diameter 10"
Screened Interval(s) _____
Total Length of Well Casing _____
Measured Total Depth (TOC) Initial 21.56
Final _____

Initial Depth to Water (TOC) 8.44 Date 3/5/94 Time 1015
Stabilized Depth to Water (TOC) _____ Date _____ Time _____

DEVELOPMENT

TECHNIQUE(S)	EQUIPMENT TYPE/CAPACITY
___ Jetting (Airlift)	
___ Surge Block	
___ Bailing	
✓ Pumping	
___ Other	

PURGE VOLUME CALCULATION

Casing Volume:
13.1 Ft. of water x 0.65 Gallons/Foot
= 8.52 Gallons per Single Casing Volume

Sand Pack Volume:
13.1 Ft. of Saturated Sand Pack
x 4.0 Gallons/Foot (borehole diameter)
= 52.4 Gallons (in borehole)
- 8.5 Gallons of Casing Vol. for Saturated Interval
= 43.9 x 0.3 (assuming porosity = 30%)
= 13.17 Gallons Within Sand Pack

Single Purge Volume: 21.7 Gallons (Casing Vol. + Sand Pack Vol. + Fluids Added)
Minimum Purge Volume: 108 Gallons
Actual Purge Volume: 108 Gallons
Volume Measured by: _____
Rate of Development _____ Gallons/Minute (Hour,Day)
Pumping Rate/Depth _____ @ ____ Ft. (Below Grd.)
Immiscible Phases Present: Y (N) Thickness _____
Calibration Date _____ See Sheet ____ of ____

FLUIDS ADDED

Lost Drilling Fluid: _____ Gallons
Lost Purge Water: _____ Gallons
Water During Installation: _____ Gallons
Total Fluids Added: _____ Gallons
Source of Added Water: _____
Parameters of Added Water Measured: Y N
Sample Collected of Added Water: Y N
Sample Designation of Added Water: _____

INSTRUMENT CALIBRATION

pH Meter: _____ Spec. Conductance Meter: 4.51
pH 4.0 = 3.99 @ 13.4 °C Standard _____ µmhos/cm@ 25°C 5ml, 23%
pH 7.0 = _____ @ _____ °C Reading _____ µmhos/cm @ _____ °C
pH 10.0 = _____ @ _____ °C Turbidity Meter: 0
Dissolved Oxygen Meter: 10.71 Other: PID. Cal 3/4/94 1010 - 100ppm Isobutylene: Reading 97.7ppm

	Total Volume Discharged	Rate of Discharge	Time	Temp	pH	Specific* Conductance	Turbidity or D.O.	Clarity, Odor PID Readings, Other:
3/4/94	10 GAL		1030	16.1	7.10	.825	T999 4.50	0.03 SAL VERY TURBID
	20		1047	16.1	7.23	.773	T129 8.82	.03 % SAL Armed DRY.
3/5/94	30		950	15.2	6.47	.810	T443 6.92	.03 % SAL MOD
	40		1003	15.3	6.77	.771	T999 4.29	.03 SAL
	50		1015	15.6	6.87	.810 ~~.687~~	T999 5.60	.03 SAL Pumped Dry
	60		1253	16.2	6.69	.765	T203 3.51	.03 SAL Clearing
	70		1257	16.6	6.75	.790	T882 4.82	.03 SAL "
	75 gal	pumped		DRY	3/5/94	0		1301
3/7/94	85		0953	16.5	6.81	.770	T.88 D.O. 2.40	.03 % SAL FAIR to clear
	95		1000	16.6	6.87	.765	T 196 D.O. 3.9	.03 % SAL

Development Completed at _____ Gallons Discharged. Date: 3/7/94 Time: 1015

Criteria: Stable Chemistry + Sufficient Purge Volume Personnel: _____

* Specific Conductance readings temperature compensated to 25°C, if not, report temperatures at which reading obtained.

108 1015; 17.6, 6.96 ; .795 T 999 ; .03 % sal ; 005.0 ; Mod. Turbid.

PRC Environmental Management, Inc.

WELL DEVELOPMENT DATA SHEET

BORING NO. SB10-11 WELL NO. MW10-11 Sheet 1 of 2

Project
Project No.
Date(s) of Installation
Date(s) of Development 3/3/94 / 3/4/94 / 3-5-94 / 3-7 / 3-8
Personnel/Company Bad Dominic / Megan Donahue, B. Schuller
Type of Rig Used

3/17 3/18 3/20 3/21 3/22

Casing Diameter/Type 4"
Borehole Diameter 10"
Screened Interval(s)
Total Length of Well Casing
Measured Total Depth (TOC) Initial 21.85
Final
Initial Depth to Water (TOC) 6.32 Date 3/3/94 Time 1600
Stabilized Depth to Water (TOC) ~~15.53~~ Date 3/3/ Time

DEVELOPMENT

TECHNIQUE(S) EQUIPMENT TYPE/CAPACITY

- ___ Jetting (Airlift)
- ___ Surge Block
- ✓ Bailing 3/17
- ☒ Pumping Series 7090 Grundfos Pump
- ___ Other

PURGE VOLUME CALCULATION

Casing Volume:
15.53 Ft. of water x 0.65 Gallons/Foot
= 10.1 Gallons per Single Casing Volume

Sand Pack Volume: 15.53
~~10.1~~ Ft. of Saturated Sand Pack
x 4.0 Gallons/Foot (borehole diameter)
= ~~40.4~~ Gallons (in borehole) 62
10.1 - ~~15.5~~ Gallons of Casing Vol. for Saturated Interval
52 = ~~24.9~~ x 0.3 (assuming porosity = 30%) 46.6
15.6 = ~~7.47~~ Gallons Within Sand Pack 14.

FLUIDS ADDED

Lost Drilling Fluid: ___ Gallons
Lost Purge Water: ___ Gallons
Water During Installation: 0 Gallons
Total Fluids Added: ___ Gallons
Source of Added Water:
Parameters of Added Water Measured: Y N
Sample Collected of Added Water: Y N
Sample Designation of Added Water:

Single Purge Volume: ~~23.24~~ Gallons (Casing Vol. + Sand Pack Vol. + Fluids Added)
Minimum Purge Volume: ~~115~~ 128 Gallons
Actual Purge Volume: ___ Gallons
Volume Measured by:
Rate of Development ___ Gallons/Minute (Hour,Day)
Pumping Rate/Depth ___ @ ___ Ft. (Below Grd.)
Immiscible Phases Present: Y N Thickness
Calibration Date ___ See Sheet ___ of ___

INSTRUMENT CALIBRATION

pH Meter: Horiba Water Quality Checker U-10 Spec. Conductance Meter: Horiba
pH 4.0 = 4.02 @ ___ °C Standard ___ µmhos/cm@ 25°C
pH 7.0 = ___ @ ___ °C Reading ___ µmhos/cm @ ___ °C
pH 10.0 = ___ @ ___ °C Turbidity Meter:
Dissolved Oxygen Meter: Horiba Other:

Total Volume Discharged	Rate of Discharge	Time	Temp	pH	Specific* Conductance	Turbidity or D.O.	Clarity, Odor PID Readings, Other:
10 gal		1617	18.8	7.46	1.86 mspm	T 10 DO 3.73	0.05 sal %
3/3/94 15 gal		1635					Pumped Dry
3/4/94		0930	Depth to H2O — 12.46. Slow Recharge.				
" 20 gal		0945	17.2	7.09	1.64	T 14.4 DO 4.30	.06 sal, Pumped Dry
3/5/94 30		1035	18.1	7.07	1.39	T 21.4 DO 3.22	.06 sal Pumped Dry @ 31 gal
3/7/94 40		0935	18.2	6.99	0.852	140 DO 4.23	Salinity .04 Pum
3/7/94 43		0937			~~0.789~~		Pumped Dry
3/8/94 49		0920	17.0	6.95	0.789	T -10 DO 9.41	Clear @ .03% sal pumped dry
3/17/94 54	Bailed	1600	17.7	7.00	1.08	T -10 DO 3.58	0.04% sal. Airlift Clear.
" 64	"	1607	18.2	7.12	1.11	T -9.9 5.62	0.04% sal Mod. Silty, Brn.

Development Completed at ___ Gallons Discharged. Date: ___ Time: ___

Criteria: ___ Personnel: ___

Specific Conductance readings temperature compensated to 25°C, if not, report temperatures at which reading obtained.

Continued on page 2

PRC Environmental Management, Inc.

WELL DEVELOPMENT DATA SHEET

BORING NO. _____ WELL NO. MW10-11 Sheet 2 of 2

Project _____
Project No. _____
Date(s) of Installation _____
Date(s) of Development _____
Personnel/Company _____
Type of Rig Used _____

Casing Diameter/Type _____
Borehole Diameter _____
Screened Interval(s) _____
Total Length of Well Casing _____
Measured Total Depth (TOC) Initial _____
Final _____
Initial Depth to Water (TOC) _____ Date _____ Time _____
Stabilized Depth to Water (TOC) _____ Date _____ Time _____

DEVELOPMENT

TECHNIQUE(S)	EQUIPMENT TYPE/CAPACITY
___ Jetting (Airlift)	
___ Surge Block	
✓ Bailing	3/17 3/18 3/20 3/21
___ Pumping	
___ Other	

PURGE VOLUME CALCULATION

Casing Volume:
_____ Ft. of water x _____ Gallons/Foot
= _____ Gallons per Single Casing Volume

Sand Pack Volume:
_____ Ft. of Saturated Sand Pack
x _____ Gallons/Foot (borehole diameter)
= _____ Gallons (in borehole)
- _____ Gallons of Casing Vol. for Saturated Interval
= _____ x 0.3 (assuming porosity = 30%)
= _____ Gallons Within Sand Pack

Single Purge Volume: _____ Gallons (Casing Vol. + Sand Pack Vol. + Fluids Added)
Minimum Purge Volume: _____ Gallons
Actual Purge Volume: _____ Gallons
Volume Measured by: _____
Rate of Development _____ Gallons/Minute (Hour,Day)
Pumping Rate/Depth _____ @ _____ Ft. (Below Grd.)
Immiscible Phases Present: Y N Thickness _____
Calibration Date _____ See Sheet _____ of _____

FLUIDS ADDED

Lost Drilling Fluid: _____ Gallons
Lost Purge Water: _____ Gallons
Water During Installation: _____ Gallons
Total Fluids Added: _____ Gallons
Source of Added Water: _____
Parameters of Added Water Measured: Y N
Sample Collected of Added Water: Y N
Sample Designation of Added Water: _____

Has to be auto calibrated 3/20/94 @ 1200 - OK

INSTRUMENT CALIBRATION

pH Meter: _____ Spec. Conductance Meter: _____
pH 4.0 = _____ @ _____ °C Standard _____ µmhos/cm@ 25°C
pH 7.0 = _____ @ _____ °C Reading _____ µmhos/cm @ _____ °C
pH 10.0 = _____ @ _____ °C Turbidity Meter: _____
Dissolved Oxygen Meter: _____ Other: _____

	Total Volume Discharged	Rate of Discharge	Time	°C Temp	pH	Specific* Conductance	Turbidity or D.O.	Clarity, Odor PID Readings, Other:
3-17-94	66	Bailed	1615		Bailed	Dry very turbid.		
3/18/94	74	"	1056	18.3	7.02	0.803 mS/cm	T-999-1 5.52 mg/L	0.03% Salt. Bailed Dry Mon Salt brown
3/20/94	84	"	1207	18.2	6.75	0.768 "	T-999 DO-5.76	0.03% Sal as above, Bailed Dry
3/21/94	92	"	1700	18.2	7.05	0.729	T999 DO 5.35	0.03% Sal as above. Bailed Dry.
3/22/94	102	"	1045	18.1	6.98	0.740	T999 DO 5.71	0.03% Sal. as above. Bailed Dry
3/23/94	112	"	1025	NO	parameters	measured	.	Bailed Dry. mod. cloudy as A
3/24/94	122	"	1730	18.2	6.81	0.751	T999 DO 4.58	0.03% Sal! mod cloudy, Brown MOC level 9.81
3/25/94		"						
3/28/94	123	"	0905	17.8	6.74	.667	T442 DO: 2.05	Somewhat clear, Shown/odor
	126		0912	17.8	6.85	.708	T999 DO: 7.10	

Development Completed at 1 Gallons Discharged. Date: _____ Time: _____

Criteria: _____ Personnel: _____

* Specific Conductance readings temperature compensated to 25°C, if not, report temperatures at which reading obtained.

PRC Environmental Management, Inc.

WELL DEVELOPMENT DATA SHEET

BORING NO. SB10-12 WELL NO. MW10-12 Sheet ___ of ___

Project _____
Project No. _____
Date(s) of Installation _____
Date(s) of Development 3/3/94
Personnel/Company Bob DeAngelis
Megan Donahue
Type of Rig Used _____

Casing Diameter/Type 4" ID
Borehole Diameter 4"
Screened Interval(s) _____
Total Length of Well Casing _____
Measured Total Depth (TOC) Initial 18.41
Final _____

Initial Depth to Water (TOC) 2.35 Date 3/3/94 Time 1335
Stabilized Depth to Water (TOC) _____ Date _____ Time _____

DEVELOPMENT

TECHNIQUE(S)	EQUIPMENT TYPE/CAPACITY
___ Jetting (Airlift)	
___ Surge Block	
___ Bailing	
X Pumping	
___ Other	

PURGE VOLUME CALCULATION

Casing Volume:
16.0 Ft. of water x 0.65 Gallons/Foot
= 10.4 Gallons per Single Casing Volume

Sand Pack Volume: 16
~~18.4~~ Ft. of Saturated Sand Pack
4.0 x ~~44.7~~ 41.7 Gallons/Foot (borehole diameter)
= 41.7 Gallons (in borehole) 6.4
- 10.4 Gallons of Casing Vol. for Saturated Interval 53.6
= 31.3 x 0.3 (assuming porosity = 30%)
= 9.39 Gallons Within Sand Pack 16

Single Purge Volume: 19.79 26 Gallons (Casing Vol. + Sand Pack Vol. + Fluids Added)
Minimum Purge Volume: ~~99~~ 130 Gallons
Actual Purge Volume: _____ Gallons
Volume Measured by: 5 gal bucket
Rate of Development _____ Gallons/Minute (Hour,Day)
Pumping Rate/Depth _____ @ ____ Ft. (Below Grd.)
Immiscible Phases Present: Y (N) Thickness _____
Calibration Date _____ See Sheet ____ of ____

FLUIDS ADDED

Lost Drilling Fluid: _____ Gallons
Lost Purge Water: _____ Gallons
Water During Installation: _____ Gallons
Total Fluids Added: _____ Gallons
Source of Added Water: _____
Parameters of Added Water Measured: Y N
Sample Collected of Added Water: Y N
Sample Designation of Added Water: _____

INSTRUMENT CALIBRATION

pH Meter: _____ Spec. Conductance Meter: _____
pH 4.0 = _____ @ _____ °C Standard _____ µmhos/cm@ 25°C
pH 7.0 = _____ @ _____ °C Reading _____ µmhos/cm @ _____ °C
pH 10.0 = _____ @ _____ °C Turbidity Meter: _____
Dissolved Oxygen Meter: _____ Other: _____

Total Volume Discharged	Rate of Discharge	Time	Temp	pH	Specific* Conductance	Turbidity or D.O.	Clarity, Odor PID Readings, Other:
10 gal		1355	16.5	7.00	.660	T999 D3.18	0.02 sal V. turbid, Grey/Blue
20		1400	16.5	6.88	.609	T999 3.77	.02 % sal
30		1405	16.4	6.99	.650	T999 4.5	.02% sal V. turbid
40		1425	17.0	7.12	.738	T999 3.34	.03% sal turbid
50		1431	17.1	7.05	.628	T999 5.11	.02% sal
60		1440	16.8	7.06	.624	T910 3.18	.02% sal
70		1450	16.9	7.01	.662	T999 5.01	.02% sal Mod. turbid Clearing
80		1457	16.9	7.06	.675	T999 4.78	.02% sal
90		1505	16.8	7.05	.664	T999 4.62	.02% sal
100		1515	16.8	7.17	.655	T999 4.66	.02% sal Mod. turbid

Development Completed at _____ Gallons Discharged. Date: 3/3/94 Time: 1515
Criteria: Stable Chemistry / Sufficient Purge Personnel: Barbara DeGangelis

* Specific Conductance readings temperature compensated to 25°C, if not, report temperatures at which reading obtained.

See BACK.

MW10-12

Total Vol	Rate	Time	Temp	pH	Cond	Turb	DO	Other
3/4/94 110		1655	16.10	6.84	0.553	828	3.72	0.02 cal
120		1700	15.6	7.03	0.554	974	3.04	0.02 "
130		1710	15.9	6.94	.611	472	4.11	0.02

PRC Environmental Management, Inc.

WELL DEVELOPMENT DATA SHEET

BORING NO. SB10-14 WELL NO. MW10-14 Sheet 1 of 1

Project NFD Pt. Molate
Project No. 044-0248 IRSIFW
Date(s) of Installation
Date(s) of Development 3/3/94 & 3/4/94
Personnel/Company Barb DeRogolis
Megan Donahue
Type of Rig Used

Casing Diameter/Type 4" ID / PVC
Borehole Diameter 10"
Screened Interval(s)
Total Length of Well Casing
Measured Total Depth (TOC) Initial 20.2
Final
Initial Depth to Water (TOC) 6.44 Date 3/3/94 Time 1025
Stabilized Depth to Water (TOC) ~~6.44~~ BGD Date Time

DEVELOPMENT

TECHNIQUE(S) EQUIPMENT TYPE/CAPACITY

- ___ Jetting (Airlift)
- ___ Surge Block
- ___ Bailing
- X Pumping w/ Series 7090 Grizzler Pump
- ___ Other

PURGE VOLUME CALCULATION

Casing Volume:
13.76 Ft. of water x 0.65 Gallons/Foot - 4"
= 8.94 Gallons per Single Casing Volume

Sand Pack Volume:
8.94 Ft. of Saturated Sand Pack 13.76
x 4 Gallons/Foot (borehole diameter) - 10"
= 35.77 Gallons (in borehole) 54
- 8.94 Gallons of Casing Vol. for Saturated Interval
= 26.83 x 0.3 (assuming porosity = 30%)
= 8.05 Gallons Within Sand Pack

FLUIDS ADDED

Lost Drilling Fluid: ___ Gallons
Lost Purge Water: ___ Gallons
Water During Installation: ___ Gallons
Total Fluids Added: 0 Gallons
Source of Added Water:
Parameters of Added Water Measured: Y N
Sample Collected of Added Water: Y N
Sample Designation of Added Water:

Single Purge Volume: 17 Gallons (Casing Vol. + Sand Pack Vol. + Fluids Added) 108
Minimum Purge Volume: 85 (17 x 5) Gallons
Actual Purge Volume: ~~5 gal bucket~~ Gallons 0
Volume Measured by: 5 gal bucket
Rate of Development ___ Gallons/Minute (Hour,Day)
Pumping Rate/Depth ___ @ ___ Ft. (Below Grd.)
Immiscible Phases Present: Y (N) Thickness

INSTRUMENT CALIBRATION

pH Meter: Horiba Water Quality Checker U-10 Calibration Date 3/3/94 See Sheet ___ of ___
Spec. Conductance Meter:
pH 4.0 = 4.02 @ ___ °C Standard ___ µmhos/cm@ 25°C
pH 7.0 = ___ @ ___ °C Reading ___ µmhos/cm @ ___ °C
pH 10.0 = ___ @ ___ °C Turbidity Meter: Horiba
Dissolved Oxygen Meter: Horiba Other:

Total Volume Discharged	Rate of Discharge	Time	Temp	pH	Specific* Conductance	Turbidity or D.O.	Clarity, Odor PID Readings, Other:
3/3 5 gal	~7.5 gal/min	1105	14.9°C	6.5	.349 S/cm	999 NAF 4.93 mg/l	0.01% SAL Very Turbid
				~~7.49~~			
20 gal		1115	14.2	5.96	.226	T996 5.70 mg/l	0.00% SAL Very Turbid
25 gal		1117	14.2	6.60	.216	T999 8.60 mg/l	0.00% SAL
30 gal		1123	14.2	6.15	.223	T999 7.23	0.00% SAL Moderately Turbid
40 gal		1130	14.4°C	6.15	.254	T994 6.58 mg/l	0.01% SAL Slt. Turbid
50 gal		1137	14.5°C	6.32	.275	T999 8.40 g/l	0.01% SAL
60 gal		1146	14.4°C	6.23	.227	T841 7.10	0.00 SAL
70 gal		1154	14.3	6.06	.228	T810 7.04	0.00 Fairly Clear
80 gal		1203	14.5	6.39	.228	999 9.71	0.01 SAL

Development Completed at 85 Gallons Discharged. Date: 3/2/94 Time: 1207
Criteria: State Chemistry / Sufficient Discharge Personnel: Barb DeRogolis

* Specific Conductance readings temperature compensated to 25°C, if not, report temperatures at which reading obtained.

85 gal 1207 14.5°C 6.19 .231 T8.53 6.98 mg/l 0.00 SAL See back

MW10-14

	TOTAL VOLUME	Discharge Rate	Time	Temp	gal.	pH	Cond	DO	TURB
3/4/94	100gal		1630	14.6	0.0	6.15	.203	5.95	859
"	110		1640	14.2	0.0	6.02	.205	6.26	872

PRC Environmental Management, Inc.

WELL DEVELOPMENT DATA SHEET

BORING NO. _____ WELL NO. MW10-15 Sheet ___ of ___

Project _____
Project No. _____
Date(s) of Installation _____
Date(s) of Development 3/16
Personnel/Company _____
Type of Rig Used _____

Casing Diameter/Type _____
Borehole Diameter _____
Screened Interval(s) _____
Total Length of Well Casing _____
Measured Total Depth (TOC) Initial 15.67
Final _____
Initial Depth to Water (TOC) 14.86 Date 3/16/94 Time 1529
Stabilized Depth to Water (TOC) _____ Date _____ Time _____

DEVELOPMENT

TECHNIQUE(S)	EQUIPMENT TYPE/CAPACITY
___ Jetting (Airlift)	
___ Surge Block	
___ Bailing	
___ Pumping	
___ Other	

PURGE VOLUME CALCULATION

Casing Volume:
0.81 Ft. of water x 0.65 Gallons/Foot
= 0.53 Gallons per Single Casing Volume

Sand Pack Volume:
0.81 Ft. of Saturated Sand Pack
x 4 Gallons/Foot (borehole diameter)
= 3.24 Gallons (in borehole)
- 0.53 Gallons of Casing Vol. for Saturated Interval
= 2.71 x 0.3 (assuming porosity = 30%)
= 0.81 Gallons Within Sand Pack

Single Purge Volume: 1.34 Gallons (Casing Vol. + Sand Pack Vol. + Fluids Added)
Minimum Purge Volume: 6.7 Gallons
Actual Purge Volume: _____ Gallons
Volume Measured by: _____
Rate of Development _____ Gallons/Minute (Hour,Day)
Pumping Rate/Depth _____ @ ____ Ft. (Below Grd.)
Immiscible Phases Present: Y N Thickness _____
Calibration Date _____ See Sheet ____ of ____

FLUIDS ADDED

Lost Drilling Fluid: _____ Gallons
Lost Purge Water: _____ Gallons
Water During Installation: _____ Gallons
Total Fluids Added: _____ Gallons
Source of Added Water: _____
Parameters of Added Water Measured: Y N
Sample Collected of Added Water: Y N
Sample Designation of Added Water: _____

INSTRUMENT CALIBRATION

pH Meter: _____ Spec. Conductance Meter: _____
pH 4.0 = _____ @ _____ °C Standard _____ µmhos/cm@ 25°C
pH 7.0 = _____ @ _____ °C Reading _____ µmhos/cm @ _____ °C
pH 10.0 = _____ @ _____ °C Turbidity Meter: _____
Dissolved Oxygen Meter: _____ Other: _____

	Total Volume Discharged	Rate of Discharge	Time	Temp	pH	Specific* Conductance	Turbidity or D.O.	Clarity, Odor PID Readings, Other:
3/16/94	1 gallon		1543	17.8	6.75	1.75	T 999 DO 7.30	0.08 % sal. Brown. Turbid. Pumped Dry
3/17			1030	Measured water level - DRY				
	Did not recharge sufficiently. Taken out of sampling plan. 3/21/94 - Will try to collect sample for metals + Organic Pb if possible.							

Development Completed at _____ Gallons Discharged. Date: _____ Time: _____

Criteria: _____ Personnel: _____

* Specific Conductance readings temperature compensated to 25°C, if not, report temperatures at which reading obtained.

PRC Environmental Management, Inc.

WELL DEVELOPMENT DATA SHEET ERM 10-01

BORING NO. _____ WELL NO. ERA west #3 Sheet ___ of ___

Project _____
Project No. _____
Date(s) of Installation _____
Date(s) of Development 3/11 3/12 3/15
Personnel/Company _____
Type of Rig Used _____

Casing Diameter/Type _____
Borehole Diameter _____
Screened Interval(s) _____
Total Length of Well Casing _____
Measured Total Depth (TOC) Initial 24.16
DTP 15.50 Final _____
Initial Depth to Water (TOC) 15.65 Date _____ Time _____
Stabilized Depth to Water (TOC) _____ Date _____ Time _____

DEVELOPMENT

TECHNIQUE(S) EQUIPMENT TYPE/CAPACITY

___ Jetting (Airlift) _____
___ Surge Block _____
✓ Bailing Bail - Stainless
___ Pumping _____
___ Other _____

PURGE VOLUME CALCULATION

Casing Volume:
8.51 Ft. of water x 0.65 Gallons/Foot
= 5.53 Gallons per Single Casing Volume
x5 = 27.65

Sand Pack Volume: 4 for Development
_____ Ft. of Saturated Sand Pack
x _____ Gallons/Foot (borehole diameter)
= _____ Gallons (in borehole)
- _____ Gallons of Casing Vol. for Saturated Interval
= _____ x 0.3 (assuming porosity = 30%)
= _____ Gallons Within Sand Pack

Single Purge Volume: _____ Gallons (Casing Vol. + Sand Pack Vol. + Fluids Added)
Minimum Purge Volume: _____ Gallons
Actual Purge Volume: _____ Gallons
Volume Measured by: _____
Rate of Development _____ Gallons/Minute (Hour,Day)
Pumping Rate/Depth _____ @ ____ Ft. (Below Grd.)
Immiscible Phases Present: (Y) N Thickness _____
Calibration Date _____ See Sheet ____ of ____

FLUIDS ADDED

Lost Drilling Fluid: _____ Gallons
Lost Purge Water: _____ Gallons
Water During Installation: _____ Gallons
Total Fluids Added: _____ Gallons
Source of Added Water: _____
Parameters of Added Water Measured: Y N
Sample Collected of Added Water: Y N
Sample Designation of Added Water: _____

INSTRUMENT CALIBRATION

pH Meter: _____ Spec. Conductance Meter: _____
pH 4.0 = _____ @ _____ °C Standard _____ µmhos/cm@ 25°C
pH 7.0 = _____ @ _____ °C Reading _____ µmhos/cm @ _____ °C
pH 10.0 = _____ @ _____ °C Turbidity Meter: _____
Dissolved Oxygen Meter: _____ Other: PID 161 ppM

	Total Volume Discharged	Rate of Discharge	Time	Temp	pH	Specific* Conductance	Turbidity or D.O.	Clarity, Odor PID Readings, Other:
3/11/94	10		1630	18.8	7.01	~~0.220~~ 0.204	776-T 3.19-DO	0.00% Sal water - gray product - Diesel
"	15	Bailed Dry	1640	19.3	7.05	0.227	999-T 1.14-DO	0.00% Sal - oil globules gray - fairly clear
3/12/94	20		1630	17.9	6.62	0.201	T 250 D 1.49	0.00% Sal Fairly clear 0.1 Globules
"	23	Bailed Dry	1637	17.6	6.67	0.193	T 474 D 1.72	0.00% Sal 420 Fairly SH 0.1 globules clear
3/15/94	31	Bailed	1356	No parameters taken due to oily green and hydrocarbon odor globs - cleanup				

Development Completed at 31 Gallons Discharged. Date: 3/15/94 Time: ~~15~~ 1356
Criteria: 5X Casing Volumes Personnel: [signature]

* Specific Conductance readings temperature compensated to 25°C, if not, report temperatures at which reading obtained.

PRC Environmental Management, Inc.

WELL DEVELOPMENT DATA SHEET

ERM 10-02

BORING NO. _____ **WELL NO.** ERM#2 **Sheet** ___ **of** ___

Project _____
Project No. _____
Date(s) of Installation _____
Date(s) of Development 3/12; 3/14; 3/15; 3/17
Personnel/Company _____ 3/18
Type of Rig Used _____

Casing Diameter/Type _____
Borehole Diameter _____
Screened Interval(s) _____
Total Length of Well Casing _____
Measured Total Depth (TOC) Initial ~~19.34~~ 19.44
~~DTW 14.73~~ Final _____
Initial Depth to Water (TOC) 14.73 Date 3/12/94 Time 1715
Stabilized Depth to Water (TOC) _____ Date _____ Time _____

DEVELOPMENT

TECHNIQUE(S)	EQUIPMENT TYPE/CAPACITY
___ Jetting (Airlift)	
___ Surge Block	
✓ Bailing	Stainless
___ Pumping	
___ Other	

PURGE VOLUME CALCULATION

Casing Volume:
4.7 Ft. of water x 0.65 Gallons/Foot
= 3.06 Gallons per Single Casing Volume

Sand Pack Volume:
_____ Ft. of Saturated Sand Pack
x _____ Gallons/Foot (borehole diameter)
= _____ Gallons (in borehole)
- _____ Gallons of Casing Vol. for Saturated Interval
= _____ x 0.3 (assuming porosity = 30%)
= _____ Gallons Within Sand Pack

Single Purge Volume: 15.3 Gallons (Casing Vol. x 5 ~~+ Sand Pack Vol. + Fluids Added~~)
Minimum Purge Volume: 5 Gallons
Actual Purge Volume: 16 Gallons
Volume Measured by: _____
Rate of Development _____ Gallons/Minute (Hour,Day)
Pumping Rate/Depth _____ @ _____ Ft. (Below Grd.)
Immiscible Phases Present: Y (N) Thickness _____
Calibration Date 3-15-93 See Sheet MW 10 of 07

FLUIDS ADDED

Lost Drilling Fluid: _____ Gallons
Lost Purge Water: _____ Gallons
Water During Installation: _____ Gallons
Total Fluids Added: _____ Gallons
Source of Added Water: _____
Parameters of Added Water Measured: Y N
Sample Collected of Added Water: Y N
Sample Designation of Added Water: _____

INSTRUMENT CALIBRATION

pH Meter: Horiba 3/12; Horiba 3/14; 3/15; 3/17 Spec. Conductance Meter: _____
pH 4.0 = _____ @ _____ °C Standard _____ µmhos/cm@ 25°C
pH 7.0 = _____ @ _____ °C Reading _____ µmhos/cm @ _____ °C
pH 10.0 = _____ @ _____ °C Turbidity Meter: _____
Dissolved Oxygen Meter: _____ Other: _____

	Total Volume Discharged	Rate of Discharge	Time	Temp	pH	Specific* Conductance	Turbidity or D.O.	Clarity, Odor PID Readings, Other:
3/12	4.0	Bailed	1727	17.5	~~8.33~~	1.09 mS/cm	999-T 4.43 DO	0.04% Sal V. cloudy ~~tho not~~ ~~sand~~ 1/s
3/14	7.0	"	1715	17.1	~~7.23~~ 7.80	1.08	999-T 2.38-DO	0.04% Sal cloudy; brown
3/15	10.0	"	1700	16.6	7.04	1.10	T-999 3.01 DO	0.04% Sal as above
3/17	13.0	Bail	0743	15.4	6.89	1.25	T-999 DO-2.75	0.05% Sal cloudy - brown
3/18	16.0	Bailed	0910	15.7	6.77	1.11	T-999 DO-2.80	0.05% Sal as above

Development Completed at 3/18/94 Gallons Discharged. Date: 3/18/94 Time: 0910
Criteria: Stable parameters, 16 Sounding vols. Personnel: R. DeCoyle

* Specific Conductance readings temperature compensated to 25°C, if not, report temperatures at which reading obtained.

PRC Environmental Management, Inc.

WELL DEVELOPMENT DATA SHEET

BORING NO. _____ ERM CW #2 WELL NO. ERM02-02 Sheet 1 of ___

Project CTO 248 Task 3 Landfill Invest.
Project No. 044-0248
Date(s) of Installation _____
Date(s) of Development 3/16/94
Personnel/Company Schuller, Dechnyelo, West
Type of Rig Used PRC GW Monitoring Shoreline Network System Project Rig
PROD. THICKNESS = 1.05 ft.

Casing Diameter/Type 4-inch PVC
Borehole Diameter _____
Screened Interval(s) _____
Total Length of Well Casing _____
Measured Total Depth (TOC) Initial 14.26
DTP = 3.43 Final _____
Initial Depth to Water (TOC) 4.48 Date 3/16/94 Time 1220
Stabilized Depth to Water (TOC) _____ Date _____ Time _____

DEVELOPMENT

TECHNIQUE(S)	EQUIPMENT TYPE/CAPACITY
___ Jetting (Airlift)	_____
___ Surge Block	_____
___ Bailing	_____
___ Pumping	_____
___ Other	_____

PURGE VOLUME CALCULATION

Casing Volume:
9.78 Ft. of water x 0.65 Gallons/Foot
= 6.4 Gallons per Single Casing Volume

Sand Pack Volume:
9.78 Ft. of Saturated Sand Pack
x 4 Gallons/Foot (borehole diameter) Assume 10" borehole
= 39.1 Gallons (in borehole)
- 6.4 Gallons of Casing Vol. for Saturated Interval
= 32.7 x 0.3 (assuming porosity = 30%)
= 9.82 Gallons Within Sand Pack

Single Purge Volume: 16.2 Gallons (Casing Vol. + Sand Pack Vol. + Fluids Added)
Minimum Purge Volume: 81 Gallons
Actual Purge Volume: _____ Gallons
Volume Measured by: _____
Rate of Development _____ Gallons/Minute (Hour,Day)
Pumping Rate/Depth _____ @ ____ Ft. (Below Grd.)
Immiscible Phases Present: Y N Thickness _____
Calibration Date _____ See Sheet ____ of ____

FLUIDS ADDED

Lost Drilling Fluid: _____ Gallons
Lost Purge Water: _____ Gallons
Water During Installation: _____ Gallons
Total Fluids Added: _____ Gallons
Source of Added Water: _____
Parameters of Added Water Measured: Y N
Sample Collected of Added Water: Y N
Sample Designation of Added Water: _____

INSTRUMENT CALIBRATION

pH Meter: _____ Spec. Conductance Meter: _____
pH 4.0 = _____ @ _____ °C Standard _____ µmhos/cm@ 25°C
pH 7.0 = _____ @ _____ °C Reading _____ µmhos/cm @ _____ °C
pH 10.0 = _____ @ _____ °C Turbidity Meter: _____
Dissolved Oxygen Meter: _____ Other: _____

Total Volume Discharged	Rate of Discharge	Time	°C Temp	pH	Specific* Conductance	Turbidity or D.O. mg/L	Clarity, Odor PID Readings, Other:
12	Bail	1243	14.8	6.37	1.05 mS/cm	660-T 0.70-DO	product removed; sheen and globules; silty-cloudy
begin	Pump	1249					
~30	~5 gpm	1252	15.1	6.28	1.13	315-T 4.5-DO	0.05% - sol CLEAR; slight sheen pump H2O + air = (high DO)
50	"	1255	15.0	6.40	1.15	302-T 4.84 and falling	0.05% - sol / clear
70	"	1300	15.1	6.44	1.16	-10-T 2.95 mg/L-DO	0.05% - sol clear
90	"	1304	15.0	6.50	1.12	-10-T 2.77-DO	0.05% - sol clear
110	"	1309	15.1	6.50	1.16	-10-T 2.96 and falling	0.05% sol clear
130	"	1314	15.0	6.56	1.17	-10-T 2.56 mg/L-DO	0.05% sol; clear

Development Completed at 130 Gallons Discharged. Date: 3/16/94 Time: 1314

Criteria: Stable Parameters and Volume discharged Personnel: _____

* Specific Conductance readings temperature compensated to 25°C, if not, report temperatures at which reading obtained.

PRC Environmental Management, Inc.

WELL DEVELOPMENT DATA SHEET

BORING NO. _____ **WELL NO.** MW02-01 Sheet 1 of ___

Project _____
Project No. _____
Date(s) of Installation _____
Date(s) of Development 3/16/94
Personnel/Company B. Schuller; B. DeAngelis
Type of Rig Used _____

Casing Diameter/Type _____
Borehole Diameter _____
Screened Interval(s) _____
Total Length of Well Casing _____
Measured Total Depth (TOC) Initial 25.21 (3/16)
Final _____
Initial Depth to Water (TOC) 20.91 Date 3/16/94 Time 0805
Stabilized Depth to Water (TOC) _____ Date _____ Time _____

DEVELOPMENT

TECHNIQUE(S)	EQUIPMENT TYPE/CAPACITY
___ Jetting (Airlift)	
___ Surge Block	
___ Bailing	
___ Pumping	
___ Other	

PURGE VOLUME CALCULATION

Casing Volume:
4.3 Ft. of water x 0.65 Gallons/Foot
= 2.80 Gallons per Single Casing Volume

Sand Pack Volume:
4.3 Ft. of Saturated Sand Pack
x 4.0 Gallons/Foot (borehole diameter) ← 10"
= 17.2 Gallons (in borehole)
- 2.8 Gallons of Casing Vol. for Saturated Interval
= 14.4 x 0.3 (assuming porosity = 30%)
= 4.32 Gallons Within Sand Pack

Single Purge Volume: (4.32 + 2.8) = 7.12 Gallons (Casing Vol. + Sand Pack Vol. + Fluids Added)
x5 = 35.6
Minimum Purge Volume: 35.6 Gallons
Actual Purge Volume: 50 Gallons
Volume Measured by: _____
Rate of Development _____ Gallons/Minute (Hour,Day)
Pumping Rate/Depth _____ @ ___ Ft. (Below Grd.)
Immiscible Phases Present: Y (N) Thickness _____
Calibration Date _____ See Sheet ___ of ___

FLUIDS ADDED

Lost Drilling Fluid: _____ Gallons
Lost Purge Water: _____ Gallons
Water During Installation: _____ Gallons
Total Fluids Added: _____ Gallons
Source of Added Water: _____
Parameters of Added Water Measured: Y N
Sample Collected of Added Water: Y N
Sample Designation of Added Water: _____

INSTRUMENT CALIBRATION

pH Meter: HORIBA 3/11/(0757); Spec. Conductance Meter: _____
pH 4.0 = _____ @ _____ °C Standard _____ µmhos/cm@ 25°C
pH 7.0 = _____ @ _____ °C Reading _____ µmhos/cm @ _____ °C
pH 10.0 = _____ @ _____ °C Turbidity Meter: ✓
Dissolved Oxygen Meter: ✓ Other: ✓

Total Volume Discharged	Rate of Discharge	Time	Temp	pH	Specific* Conductance (mS/cm)	Turbidity or D.O.	Clarity, Odor PID Readings, Other:
3/16-94 Ø		0800					PID = 87.3 HC odor
5 gal		0830	15.9	6.28	0.430	T 999 DO (-0.05)	0.01% Gas oil, Grey color, Hvy silt, slight HC sheen/odor
10 gal		0835	15.8	6.35	0.433	T 999 0.45 DO	0.01% oil, AS above less HC sheen
15 gal		0840	15.9	6.39	0.429	T 999 1.45 DO	0.01% oil, AS above V. silt, HC sheen + odor
20 gal		0843	15.9	6.40	0.431	T 999 DO 1.90	0.01% oil AS above
25 gal		0845	15.9	6.40	0.432	T 999 DO 1.68	0.01% oil AS above
30 gal		0848	15.9	6.42	0.435	T 999 DO 2.05	0.01% AS above, clearing slightly
35 gal		0850	15.9	6.41	0.435	T 999 DO 1.97	0.01% oil HC
50		0903	15.9	6.43	0.434	T 999 DO 2.04	0.01% oil AS above

Development Completed at 50 Gallons Discharged. Date: 3/16/94 Time: (Min.) 3
Criteria: Stable Chemistry, Sufficient Discharge Personnel: B. Schuller

* Specific Conductance readings temperature compensated to 25°C, if not, report temperatures at which reading obtained.

PRC Environmental Management, Inc.

WELL DEVELOPMENT DATA SHEET

BORING NO. _____ WELL NO. MW02-04 ___ of ___

Project _____
Project No. _____
Date(s) of Installation _____
Date(s) of Development 3/16 3/17 3/18
Personnel/Company B. DeAngelis, B. Schuller
Type of Rig Used _____

Casing Diameter/Type _____
Borehole Diameter _____
Screened Interval(s) _____
Total Length of Well Casing _____
Measured Total Depth (TOC) Initial 30.16
Final _____

Initial Depth to Water (TOC) 26.38 Date 3/16/94 Time 1005
Stabilized Depth to Water (TOC) _____ Date _____ Time _____

DEVELOPMENT

TECHNIQUE(S)	EQUIPMENT TYPE/CAPACITY
___ Jetting (Airlift)	
___ Surge Block	
✓ Bailing	4" Stainless Steel
___ Pumping	
___ Other	

PURGE VOLUME CALCULATION

Casing Volume:
3.7 Ft. of water x 0.65 Gallons/Foot
= 2.46 Gallons per Single Casing Volume

Sand Pack Volume:
3.7 Ft. of Saturated Sand Pack
4 x ~~14.8~~ 0.65 Gallons/Foot (borehole diameter)
= 14.8 Gallons (in borehole)
- 2.46 Gallons of Casing Vol. for Saturated Interval
= 12.34 x 0.3 (assuming porosity = 30%)
= 3.7 Gallons Within Sand Pack

Single Purge Volume: 6.16 Gallons (Casing Vol. + Sand Pack Vol. + Fluids Added)
Minimum Purge Volume: 31 Gallons
Actual Purge Volume: _____ Gallons
Volume Measured by: _____
Rate of Development _____ Gallons/Minute (Hour,Day)
Pumping Rate/Depth _____ @ ____ Ft. (Below Grd.)
Immiscible Phases Present: Y N Thickness _____
Calibration Date _____ See Sheet ____ of ____

FLUIDS ADDED

Lost Drilling Fluid: _____ Gallons
Lost Purge Water: _____ Gallons
Water During Installation: _____ Gallons
Total Fluids Added: _____ Gallons
Source of Added Water: _____
Parameters of Added Water Measured: Y N
Sample Collected of Added Water: Y N
Sample Designation of Added Water: _____

INSTRUMENT CALIBRATION

pH Meter: _____
pH 4.0 = _____ @ _____ °C
pH 7.0 = _____ @ _____ °C
pH 10.0 = _____ @ _____ °C
Dissolved Oxygen Meter: _____
Spec. Conductance Meter: _____
Standard _____ µmhos/cm@ 25°C
Reading _____ µmhos/cm @ _____ °C
Turbidity Meter: _____
Other: PID 12.4 ppm.

	Total Volume Discharged	Rate of Discharge	Time	Temp	pH	Specific* Conductance	Turbidity or D.O.	Clarity, Odor PID Readings, Other:
3/16	5 gal	Bailed	1015	17.4	6.88	1.47	T 999 DO 2.01	0.06% sal. V. Turbid Silt & fine sand BROWN, No sheen or odor
	8 gal	Bailed Dry	1020	17.7	6.97	1.46	T 999 DO 4.30	0.06% sal As Above
	13 gal		1605	18.0	6.43	1.37	T 999 4.76	0.05% sal turbid BROWN, as above
	15.5 gal	Bailed Dry	1615	17.8	6.69	1.31	T 999 DO 5.63	0.05% sal
3/17/94	22.5	Bailed	0835	17.0	6.58	1.34	T 999 DO 4.08	0.07% sal As Above
	30.0	Bail	1005	17.1	6.50	1.32	T 999 5.71-00	0.06% sal; cloudy brown
3/18/94	35.0	Bailed	1030	17.8	6.49	1.42	T 999 5.42	0.06% sal DO Above
"	37.0	Bailed dry						

Development Completed at 37 Gallons Discharged. Date: 3/18/94 Time: 10:32
Criteria: Fairly stable parameters, sufficient discharge Personnel: B. DeAngelis

* Specific Conductance readings temperature compensated to 25°C, if not, report temperatures at which reading obtained.

PRC Environmental Management, Inc.

WELL DEVELOPMENT DATA SHEET

BORING NO. _____ WELL NO. MW11-02 Sheet ___ of ___

Hot and Sunny 3/12, 3/14

Project _____
Project No. _____
Date(s) of Installation _____
Date(s) of Development 3/12/94
Personnel/Company B. Scholler; D. West; B. DeAngelis
Type of Rig Used _____

Casing Diameter/Type 4"
Borehole Diameter _____
Screened Interval(s) _____
Total Length of Well Casing _____
Measured Total Depth (TOC) Initial 26.76
Final _____
Initial Depth to Water (TOC) 17.94 ~~(3/12/94)~~ Date 3/12/94 Time 1500
Stabilized Depth to Water (TOC) _____ Date _____ Time _____

DEVELOPMENT

TECHNIQUE(S)	EQUIPMENT TYPE/CAPACITY
___ Jetting (Airlift)	
___ Surge Block	
X Bailing	Stainless 3/14
X Pumping	Grunfos 3/12
___ Other	

PURGE VOLUME CALCULATION

Casing Volume:
8.86 Ft. of water x 0.65 Gallons/Foot
= 5.76 Gallons per Single Casing Volume

Sand Pack Volume:
_____ Ft. of Saturated Sand Pack
x _____ Gallons/Foot (borehole diameter)
= _____ Gallons (in borehole)
- _____ Gallons of Casing Vol. for Saturated Interval
= _____ x 0.3 (assuming porosity = 30%)
= _____ Gallons Within Sand Pack

Single Purge Volume: 28.8 Gallons (Casing Vol. + ~~Sand Pack Vol. + Fluids Added~~)
Minimum Purge Volume: _____ Gallons
Actual Purge Volume: _____ Gallons
Volume Measured by: _____
Rate of Development _____ Gallons/Minute (Hour,Day)
Pumping Rate/Depth _____ @ ____ Ft. (Below Grd.)
Immiscible Phases Present: Y N Thickness _____
Calibration Date _____ See Sheet ____ of ____

FLUIDS ADDED

Lost Drilling Fluid: _____ Gallons
Lost Purge Water: _____ Gallons
Water During Installation: _____ Gallons
Total Fluids Added: _____ Gallons
Source of Added Water: _____
Parameters of Added Water Measured: Y N
Sample Collected of Added Water: Y N
Sample Designation of Added Water: _____

INSTRUMENT CALIBRATION

pH Meter: Horiba 3/12; 3/14 1341 Spec. Conductance Meter: _____
pH 4.0 = _____ @ _____ °C Standard _____ µmhos/cm@ 25°C
pH 7.0 = _____ @ _____ °C Reading _____ µmhos/cm @ _____ °C
pH 10.0 = _____ @ _____ °C Turbidity Meter: _____
Dissolved Oxygen Meter: _____ Other: _____

	Total Volume Discharged	Rate of Discharge	Time	°C Temp	pH	Specific* Conductance	Turbidity or D.O.	Clarity, Odor PID Readings, Other:
3/12/94	8		1523	17.6	6.43	1.10 mS/cm	208-T 3.79-DO	0.04% sol
	10		1527	18.2	6.61	1.14	441-T 4.36-DO	0.05% sol cloudy; brown v. slight oil sheen
	15	0.5gpm	1550	20.2	7.00	1.13	852-T 7.30-DO	0.5% sol cloudy
3/14/94	25	bailed	1351	17.4	6.52	1.12	480-T 12.40	0.05% - sol
	30	bailed	1407	17.5	6.67	1.11	499-T 4.85-DO	0.05% sol; v. slight oil sheen cloudy; brown

Development Completed at 30 Gallons Discharged. Date: 3/14/94 Time: 1407
Criteria: 5x Casing Vol. and Stable Parameters Personnel: [illegible]

* Specific Conductance readings temperature compensated to 25°C, if not, report temperatures at which reading obtained.

PRC Environmental Management, Inc.

WELL DEVELOPMENT DATA SHEET

BORING NO. _____ WELL NO. MW11-05 Sheet ___ of ___

Project _____
Project No. _____
Date(s) of Installation _____
Date(s) of Development 3/12/94
Personnel/Company B. Schuller; D. West
Type of Rig Used _____

Casing Diameter/Type 4"
Borehole Diameter 10"
Screened Interval(s) _____
Total Length of Well Casing _____
Measured Total Depth (TOC) Initial 23.22
Final _____
Initial Depth to Water (TOC) 16.38 3/12/94 Date _____ Time _____
Stabilized Depth to Water (TOC) _____ Date _____ Time _____

DEVELOPMENT

TECHNIQUE(S) EQUIPMENT TYPE/CAPACITY

___ Jetting (Airlift) _____
___ Surge Block _____
___ Bailing _____
X Pumping Grunfos
___ Other _____

PURGE VOLUME CALCULATION

Casing Volume:
6.84 Ft. of water x 0.65 Gallons/Foot
= 4.45 Gallons per Single Casing Volume

Sand Pack Volume:
_____ Ft. of Saturated Sand Pack
x _____ Gallons/Foot (borehole diameter)
= _____ Gallons (in borehole)
- _____ Gallons of Casing Vol. for Saturated Interval
= _____ x 0.3 (assuming porosity = 30%)
= _____ Gallons Within Sand Pack

Single Purge Volume: 4.45 Gallons (Casing Vol. + ~~Sand Pack Vol. + Fluids Added~~)
Minimum Purge Volume: (Single x 5) 22.25 Gallons
Actual Purge Volume: _____ Gallons
Volume Measured by: _____
Rate of Development _____ Gallons/Minute (Hour,Day)
Pumping Rate/Depth _____ @ _____ Ft. (Below Grd.)
Immiscible Phases Present: Y N Thickness _____
Calibration Date _____ See Sheet _____ of _____

FLUIDS ADDED

Lost Drilling Fluid: _____ Gallons
Lost Purge Water: _____ Gallons
Water During Installation: _____ Gallons
Total Fluids Added: _____ Gallons
Source of Added Water: _____
Parameters of Added Water Measured: Y N
Sample Collected of Added Water: Y N
Sample Designation of Added Water: _____

INSTRUMENT CALIBRATION

pH Meter: _____ Spec. Conductance Meter: _____
pH 4.0 = _____ @ _____ °C Standard _____ µmhos/cm@ 25°C
pH 7.0 = _____ @ _____ °C Reading _____ µmhos/cm @ _____ °C
pH 10.0 = _____ @ _____ °C Turbidity Meter: _____
Dissolved Oxygen Meter: _____ Other: _____

Total Volume Discharged	Rate of Discharge	Time	Temp °C	pH	Specific* mS/cm Conductance	Turbidity or D.O.	Clarity, Odor PID Readings, Other:
5	~12 gpm	1437	18.0	5.68	3.20	999-T 2.89-DO	0.15% Sol Silty - brown/green
20	~~[illegible]~~/25s	1439	17.6	5.73	0.94	603-T 1.33-DO	0.04% clearing; brown
30		1441	16.8	5.68	0.523	180-T 2.70 DO	0.01% Sol
70		1444	16.8	5.67	0.371	9-T 1.85-DO	0.01% - Sol clearing; gray brown
100		1447	16.5	5.59	0.343	148-T 3.06-DO	0.01% Sol ~~gray~~ brown
140		1450	16.5	5.55	0.341	227-T 2.58-DO	0.01% - Sol brown
170		1453	16.4	5.61	0.336	2-T 1.34-DO	0.01% - Sol clearing
180		1454	16.4	5.59	0.329	-10-T 2.00	0.01% - Sol
210		1457	16.4	5.54	0.326	67-T 3.13-DO	0.01% - Sol

Development Completed at 220 Gallons Discharged. Date: 3/12/94 Time: 1450
Criteria: Parameters Stable Personnel: _____

* Specific Conductance readings temperature compensated to 25°C, if not, report temperatures at which reading obtained.

PRC Environmental Management, Inc.

WELL DEVELOPMENT DATA SHEET

BORING NO. _____ **WELL NO.** MW11-08 Sheet 1 of ___

Project _____
Project No. _____
Date(s) of Installation _____
Date(s) of Development 3/14/94
Personnel/Company B. Schulman; S. DeAngelis
Type of Rig Used _____

Casing Diameter/Type 4"
Borehole Diameter 10"
Screened Interval(s) _____
Total Length of Well Casing _____
Measured Total Depth (TOC) Initial 23.17 (3/14/94) Final _____
Initial Depth to Water (TOC) 14.31 Date 3/14 Time 1452
Stabilized Depth to Water (TOC) _____ Date _____ Time _____

DEVELOPMENT

TECHNIQUE(S)	EQUIPMENT TYPE/CAPACITY
___ Jetting (Airlift)	
___ Surge Block	
X Bailing	Stainless Steel 4"
___ Pumping	
___ Other	

PURGE VOLUME CALCULATION

Casing Volume:
8.86 Ft. of water x 0.65 Gallons/Foot
= 5.75 Gallons per Single Casing Volume
5.75 x 5

Sand Pack Volume:
_____ Ft. of Saturated Sand Pack
x _____ Gallons/Foot (borehole diameter)
= _____ Gallons (in borehole)
- _____ Gallons of Casing Vol. for Saturated Interval
= _____ x 0.3 (assuming porosity = 30%)
= _____ Gallons Within Sand Pack

Single Purge Volume: 28.8 Gallons (Casing Vol. x 5 + ~~Sand Pack Vol. + Fluids Added~~)
Minimum Purge Volume: _____ Gallons
Actual Purge Volume: _____ Gallons
Volume Measured by: _____
Rate of Development _____ Gallons/Minute (Hour,Day)
Pumping Rate/Depth _____ @ ____ Ft. (Below Grd.)
Immiscible Phases Present: Y (N) Thickness _____
Calibration Date _____ See Sheet ____ of ____

FLUIDS ADDED

Lost Drilling Fluid: _____ Gallons
Lost Purge Water: _____ Gallons
Water During Installation: _____ Gallons
Total Fluids Added: _____ Gallons
Source of Added Water: _____
Parameters of Added Water Measured: Y N
Sample Collected of Added Water: Y N
Sample Designation of Added Water: _____

INSTRUMENT CALIBRATION

pH Meter: _____ Spec. Conductance Meter: _____
pH 4.0 = _____ @ _____ °C Standard _____ µmhos/cm@ 25°C
pH 7.0 = _____ @ _____ °C Reading _____ µmhos/cm @ _____ °C
pH 10.0 = _____ @ _____ °C Turbidity Meter: _____
Dissolved Oxygen Meter: _____ Other: _____

Total Volume Discharged	Rate of Discharge	Time	Temp	pH	Specific* Conductance	Turbidity or D.O.	Clarity, Odor PID Readings, Other:
3/14/94 X	Bailed	1445					PID=17.6
10 gal	"	1605	16.2	7.13	1.62 mS/cm	864 T 1.92 DO	0.04% oil/sh. HC odor 2% gray silt, 0.1 globules & ha
15	"	1611	15.7	6.89	1.10 mS/cm	T 374 DO 1.00 mg/L	0.04% oil As above
20	"	1614	15.5	6.84	0.790	T 399 DO 1.72	0.04% oil slightly cloudy
30	"	1617	15.4	6.80	0.843	T 315 DO 3.10	0.03% oil As above
40	"	1622	15.4	6.78	0.942	T 377 DO 2.26	0.04% As above
50	"	1625	15.4	6.80	0.957	T 379 DO 2.51	0.04% As above - oil sheen slight HC, few oil globules still present.

Development Completed at 50 Gallons Discharged. Date: 3/14/94 Time: 1625
Criteria: Early stable chemistry + 5 well casing volumes Personnel: B. DeAngelis

* Specific Conductance readings temperature compensated to 25°C, if not, report temperatures at which reading obtained.

PRC Environmental Management, Inc.

WELL DEVELOPMENT DATA SHEET

Post Development Activity
Developed & Sampled in 1992

BORING NO. _____ WELL NO. MW11-13 Sheet ___ of ___

Project _____
Project No. _____
Date(s) of Installation _____
Date(s) of Development 3/10/94
Personnel/Company _____
Type of Rig Used _____

Casing Diameter/Type _____
Borehole Diameter _____
Screened Interval(s) _____
Total Length of Well Casing _____
Measured Total Depth (TOC) Initial 26.36
DTP 14.84 14.835 Final _____
Bailer Globules Initial Depth to Water (TOC) 14.85 Date 3/10/94 Time 1335
Stabilized Depth to Water (TOC) _____ Date _____ Time _____

DEVELOPMENT

TECHNIQUE(S)	EQUIPMENT TYPE/CAPACITY
___ Jetting (Airlift)	
___ Surge Block	
✓ Bailing	4" Bailer
___ Pumping	
___ Other	

PURGE VOLUME CALCULATION

Casing Volume:
11.51 Ft. of water x 0.65 Gallons/Foot
= 7.02 Gallons per Single Casing Volume
7.02 x 5 = 35.1

Sand Pack Volume:
11.51 Ft. of Saturated Sand Pack
x 4 Gallons/Foot (borehole diameter)
= 46 Gallons (in borehole)
- 7.02 Gallons of Casing Vol. for Saturated Interval
= 39 x 0.3 (assuming porosity = 30%)
= 11.7 Gallons Within Sand Pack

Single Purge Volume: 18.7 Gallons (Casing Vol. + Sand Pack Vol. + Fluids Added)
18.7 x 3 = 56
Minimum Purge Volume 18.7 x 5 = 93 Gallons
Actual Purge Volume: _____ Gallons
Volume Measured by: _____
Rate of Development _____ Gallons/Minute (Hour,Day)
Pumping Rate/Depth _____ @ ____ Ft. (Below Grd.)
Immiscible Phases Present: (Y) N Thickness _____
Calibration Date _____ See Sheet ____ of ____

FLUIDS ADDED

Lost Drilling Fluid: _____ Gallons
Lost Purge Water: _____ Gallons
Water During Installation: _____ Gallons
Total Fluids Added: _____ Gallons
Source of Added Water: _____
Parameters of Added Water Measured: Y N
Sample Collected of Added Water: Y N
Sample Designation of Added Water: _____

INSTRUMENT CALIBRATION

pH Meter: _____ Spec. Conductance Meter: _____
pH 4.0 = _____ @ ____ °C Standard _____ µmhos/cm@ 25°C
pH 7.0 = _____ @ ____ °C Reading _____ µmhos/cm @ ____ °C
pH 10.0 = _____ @ ____ °C Turbidity Meter: _____
Dissolved Oxygen Meter: _____ Other: _____

3/10/94

Total Volume Discharged	Rate of Discharge	Time	Temp	pH	Specific* Conductance	Turbidity or D.O.	Clarity, Odor PID Readings, Other:
10		1350	17.5	6.68	3.35	T-2 2.35	0.1 [illegible]
20		1355	18.5	6.54	3.62	T-2.15 2.03	0.2 sed, v. clear [illegible]
~~25~~			~~18.6~~	~~[illegible]~~	~~[illegible]~~	~~[illegible]~~	~~[illegible]~~
25		1401	18.6	6.61	3.03	T-3.07 1.64	0.15 sed v. SAA
30		1408	18.5	6.70	3.23	T-2.65 2.20	0.16 sed
35		1415	18.4	6.70	3.27	2.65 T 2.20	0.15 sed v. clear silt, 0.1 sheen

Development Completed at 35 Gallons Discharged. Date: 3/10/94 Time: 1415

Criteria: _____ Personnel: _____

* Specific Conductance readings temperature compensated to 25°C, if not, report temperatures at which reading obtained.

PRC Environmental Management, Inc.

WELL DEVELOPMENT DATA SHEET

BORING NO. _____ WELL NO. MW11-19 Sheet 1 of __

Project _____
Project No. _____
Date(s) of Installation _____
Date(s) of Development 3/14/94
Personnel/Company _____
Type of Rig Used _____

Casing Diameter/Type 4"
Borehole Diameter _____
Screened Interval(s) _____
Total Length of Well Casing _____
Measured Total Depth (TOC) Initial 23.72
Final _____
Initial Depth to Water (TOC) 16.12 Date 3/14 Time 11:35
Stabilized Depth to Water (TOC) _____ Date _____ Time _____

DEVELOPMENT

TECHNIQUE(S) EQUIPMENT TYPE/CAPACITY

___ Jetting (Airlift) _____
___ Surge Block _____
X Bailing 4" Stainless Steel
___ Pumping _____
___ Other _____

PURGE VOLUME CALCULATION

Casing Volume:
7.6 Ft. of water x 0.65 Gallons/Foot
= 4.94 Gallons per Single Casing Volume

Sand Pack Volume:
_____ Ft. of Saturated Sand Pack
x _____ Gallons/Foot (borehole diameter)
= _____ Gallons (in borehole)
- _____ Gallons of Casing Vol. for Saturated Interval
= _____ x 0.3 (assuming porosity = 30%)
= _____ Gallons Within Sand Pack

Single Purge Volume: 24.70 Gallons (Casing Vol. + ~~Sand Pack Vol. + Fluids Added~~) (X5)

Minimum Purge Volume: _____ Gallons
Actual Purge Volume: _____ Gallons
Volume Measured by: _____
Rate of Development _____ Gallons/Minute (Hour,Day)
Pumping Rate/Depth _____ @ ____ Ft. (Below Grd.)
Immiscible Phases Present: Y (N) Thickness _____
Calibration Date _____ See Sheet ____ of ____

FLUIDS ADDED

Lost Drilling Fluid: _____ Gallons
Lost Purge Water: _____ Gallons
Water During Installation: _____ Gallons
Total Fluids Added: _____ Gallons
Source of Added Water: _____
Parameters of Added Water Measured: Y N
Sample Collected of Added Water: Y N
Sample Designation of Added Water: _____

INSTRUMENT CALIBRATION

pH Meter: Horiba 3/14/94 a.m. Spec. Conductance Meter: Horiba
pH 4.0 = _____ @ ____ °C Standard _____ µmhos/cm@ 25°C
pH 7.0 = _____ @ ____ °C Reading _____ µmhos/cm @ ____ °C
pH 10.0 = _____ @ ____ °C Turbidity Meter: Horiba
Dissolved Oxygen Meter: Ade Above - Horiba Other: PID 3/14/94 1130 - 100ppm Spam Gas

Total Volume Discharged	Rate of Discharge	Time	Temp	pH	Specific* Conductance	Turbidity or D.O.	Clarity, Odor PID Readings, Other:
3/14/94 0	Bailed	1135				~~DO 2.75~~	PID = 1500 ppm - Gas odor
" 10 gal	"	1200	17.6	6.94	2.55	DO 2.75 T 999	0.12% sal Dk. grey Turbid. fine sand
" 17 gal	"	1207	17.5	6.99	2.34	T 999 1.09 DO	0.10% sal - As Above
" 22 gal	"	1212	17.5	6.92	2.22	T 999 2.97 DO	0.10% sal - As Above
" 45 gal	"	1221	17.5	6.99	2.23	T 999 2.39 DO	0.10% sal - as Above. o/sheen decreased slightly.
50		1225	17.1	6.96	2.01	T 999 1.19 DO	0.10% sal - as above

Development Completed at 50 Gallons Discharged. Date: 3/14/94 Time: 1225

Criteria: _____ Personnel: _____

* Specific Conductance readings temperature compensated to 25°C, if not, report temperatures at which reading obtained.

PRC Environmental Management, Inc.

WELL DEVELOPMENT DATA SHEET

BORING NO. _____ WELL NO. MW11-21 Sheet 1 of __

Project _____
Project No. _____
Date(s) of Installation _____
Date(s) of Development 3/17/94 3/18 3/20
Personnel/Company B. DeAngelis, B. Shelts
Type of Rig Used _____

Casing Diameter/Type 4"
Borehole Diameter _____
Screened Interval(s) _____
Total Length of Well Casing _____
Measured Total Depth (TOC) Initial 22.49
Final _____
TP 16.08
Initial Depth to Water (TOC) 16.09 Date 3/17 Time 1704
Stabilized Depth to Water (TOC) _____ Date _____ Time _____

DEVELOPMENT

TECHNIQUE(S) EQUIPMENT TYPE/CAPACITY

___ Jetting (Airlift) _____
___ Surge Block _____
✓ Bailing 3/20 4" Stainless Steel
✓ Pumping 3/18 4" 6 Run pts
___ Other _____

PURGE VOLUME CALCULATION

Casing Volume:
6.24 Ft. of water x 0.65 Gallons/Foot
= 4.16 Gallons per Single Casing Volume

Sand Pack Volume:
_____ Ft. of Saturated Sand Pack
x _____ Gallons/Foot (borehole diameter)
= _____ Gallons (in borehole)
- _____ Gallons of Casing Vol. for Saturated Interval
= _____ x 0.3 (assuming porosity = 30%)
= _____ Gallons Within Sand Pack

Single Purge Volume: 20.8 Gallons (Casing Vol. + ~~Sand Pack Vol. + Fluids Added~~) x5
Minimum Purge Volume: _____ Gallons
Actual Purge Volume: _____ Gallons
Volume Measured by: _____
Rate of Development _____ Gallons/Minute (Hour,Day)
Pumping Rate/Depth _____ @ ____ Ft. (Below Grd.)
Immiscible Phases Present: (Y) N Thickness 0.01 Clear
Calibration Date _____ See Sheet ____ of ____

FLUIDS ADDED

Lost Drilling Fluid: _____ Gallons
Lost Purge Water: _____ Gallons
Water During Installation: _____ Gallons
Total Fluids Added: _____ Gallons
Source of Added Water: _____
Parameters of Added Water Measured: Y N
Sample Collected of Added Water: Y N
Sample Designation of Added Water: _____

INSTRUMENT CALIBRATION

pH Meter: _____ Spec. Conductance Meter: _____
pH 4.0 = _____ @ _____ °C Standard _____ µmhos/cm@ 25°C
pH 7.0 = _____ @ _____ °C Reading _____ µmhos/cm @ _____ °C
pH 10.0 = _____ @ _____ °C Turbidity Meter: _____
Dissolved Oxygen Meter: _____ Other: _____

	Total Volume Discharged	Rate of Discharge	Time	°C Temp	pH	Specific* Conductance	Turbidity or D.O.	Clarity, Odor PID Readings, Other:
	Begin Pumping		1005					
3/18/94	8	2gpm	1009	17.5	6.59	0.840 mS/cm	Z19-1 5.30 mg/L DO	Clear to slight [illegible] HC odor, silty gray
		pumped	dry					
3/20/94	13	Bailed	1247	17.6	6.56	0.98 "	T 570 DO 2.74	0.039 scal, V. silt sheen HC odor, mod. cloudy - sand
"	17	Bailed 1 day	1250	17.9	6.65	1.00	T 599 DO 2.90	0.040 scal as above - increase in silt
3/21/94	22	Bailed	1735	17.6	6.67	0.95	T 486 DO 2.48	0.040 as above, mod. cloudy HC sheen + odor.

Development Completed at 3/21/94 Gallons Discharged. Date: 3/21/94 Time: 1735
Criteria: Sufficient Discharge / 2 Stable Parameters Personnel: B. Reilly

* Specific Conductance readings temperature compensated to 25°C, if not, report temperatures at which reading obtained.

PRC Environmental Management, Inc.

WELL DEVELOPMENT DATA SHEET

BORING NO. _____ WELL NO. MW11-22 Sheet ___ of ___

Project _____
Project No. _____
Date(s) of Installation _____
Date(s) of Development 3/14/94
Personnel/Company B. Angelo, R. Schuller
Type of Rig Used _____

Casing Diameter/Type 4"
Borehole Diameter 10"
Screened Interval(s) _____
Total Length of Well Casing _____
Measured Total Depth (TOC) Initial 21.92
Final _____
Initial Depth to Water (TOC) 12.99 Date 3/14/94 Time 1510
Stabilized Depth to Water (TOC) _____ Date _____ Time _____

DEVELOPMENT

TECHNIQUE(S)	EQUIPMENT TYPE/CAPACITY
___ Jetting (Airlift)	
___ Surge Block	
X Bailing	Stainless
___ Pumping	
___ Other	

PURGE VOLUME CALCULATION

Casing Volume:
8.93 Ft. of water x 0.65 Gallons/Foot
= 5.81 Gallons per Single Casing Volume

Sand Pack Volume:
_____ Ft. of Saturated Sand Pack
x _____ Gallons/Foot (borehole diameter)
= _____ Gallons (in borehole)
- _____ Gallons of Casing Vol. for Saturated Interval
= _____ x 0.3 (assuming porosity = 30%)
= _____ Gallons Within Sand Pack

Single Purge Volume: 29.05 Gallons (5x Casing Vol. + ~~Sand Pack Vol. + Fluids Added~~)
Minimum Purge Volume: _____ Gallons
Actual Purge Volume: _____ Gallons
Volume Measured by: _____
Rate of Development _____ Gallons/Minute (Hour,Day)
Pumping Rate/Depth _____ @ ____ Ft. (Below Grd.)
Immiscible Phases Present: Y (N) Thickness _____
Calibration Date 3/14/94 See Sheet ____ of ____

FLUIDS ADDED

Lost Drilling Fluid: _____ Gallons
Lost Purge Water: _____ Gallons
Water During Installation: _____ Gallons
Total Fluids Added: _____ Gallons
Source of Added Water: _____
Parameters of Added Water Measured: Y N
Sample Collected of Added Water: Y N
Sample Designation of Added Water: _____

INSTRUMENT CALIBRATION

Horiba 3/14/94 STD sol

pH Meter: _____ Spec. Conductance Meter: _____
pH 4.0 = _____ @ ____ °C Standard _____ µmhos/cm@ 25°C
pH 7.0 = _____ @ ____ °C Reading _____ µmhos/cm @ ____ °C
pH 10.0 = _____ @ ____ °C Turbidity Meter: _____
Dissolved Oxygen Meter: _____ Other: PID - 2.3 ppm

Total Volume Discharged	Rate of Discharge	Time	Temp	pH	Specific* Conductance	Turbidity or D.O.	Clarity, Odor PID Readings, Other:
3/14/94 5	Bailed	1036	15.9	6.23	0.307	T 303 1.12 DO	initially clear + heavy silty 0.01% sol w/ slight odor
" 11	"	1038	15.6	6.21	0.293	T 130 1.29 DO	0.01% sol slight clearing, SH HC slight odor
" 15	"	1040	15.5	6.22	0.289	T-2 2.20 DO	0.01% sol. as above, FAIRLY clear
" 20	"	1045	15.4	6.32	0.289	T-475 2.03 DO	0.01% As above
" 30	"	1050	15.5	6.35	0.286	T→-10 2.00 DO	0.01% clear. lt. gray. v. slight HC slight odor
" 40	"	1056	15.5	6.25	0.285	T-262 2.01 DO	0.01% sol SAA
" 50	"	1100	15.5	6.28	0.283	T-238 DO-2.20	0.01% sol SAA

and v. fine sand

Development Completed at 50 Gallons Discharged. Date: 3/14/94 Time: 1100
Criteria: Stable Parameters, 5 well casing vols Personnel: _____

* Specific Conductance readings temperature compensated to 25°C, if not, report temperatures at which reading obtained.

PRC Environmental Management, Inc.

WELL DEVELOPMENT DATA SHEET

BORING NO. _____ WELL NO. MW11-27 Sheet ___ of ___

Project _____
Project No. _____
Date(s) of Installation _____
Date(s) of Development 3/11/94
Personnel/Company _____
Type of Rig Used _____

Casing Diameter/Type 4"
Borehole Diameter 10"
Screened Interval(s) _____
Total Length of Well Casing _____
Measured Total Depth (TOC) Initial 18.75
DTP 10.96 Final _____
Initial Depth to Water (TOC) 11.74 Date _____ Time _____
Stabilized Depth to Water (TOC) _____ Date _____ Time _____

DEVELOPMENT

TECHNIQUE(S) EQUIPMENT TYPE/CAPACITY

___ Jetting (Airlift) _____
___ Surge Block _____
✓ Bailing _____
___ Pumping _____
___ Other _____

PURGE VOLUME CALCULATION

Casing Volume:
7.01 Ft. of water x 0.65 Gallons/Foot
= 4.56 Gallons per Single Casing Volume
4.56 x 5 = 22.8

Sand Pack Volume:
_____ Ft. of Saturated Sand Pack
x _____ Gallons/Foot (borehole diameter)
= _____ Gallons (in borehole)
- _____ Gallons of Casing Vol. for Saturated Interval
= _____ x 0.3 (assuming porosity = 30%)
= _____ Gallons Within Sand Pack

FLUIDS ADDED

Lost Drilling Fluid: _____ Gallons
Lost Purge Water: _____ Gallons
Water During Installation: _____ Gallons
Total Fluids Added: _____ Gallons
Source of Added Water: _____
Parameters of Added Water Measured: Y N
Sample Collected of Added Water: Y N
Sample Designation of Added Water: _____

Single Purge Volume: _____ Gallons (Casing Vol. + Sand Pack Vol. + Fluids Added)
Minimum Purge Volume: _____ Gallons
Actual Purge Volume: _____ Gallons
Volume Measured by: _____
Rate of Development _____ Gallons/Minute (Hour,Day)
Pumping Rate/Depth _____ @ ____ Ft. (Below Grd.)
Immiscible Phases Present: Y N Thickness _____
Calibration Date _____ See Sheet ____ of ____

INSTRUMENT CALIBRATION

pH Meter: _____ Spec. Conductance Meter: _____
pH 4.0 = _____ @ _____ °C Standard _____ µmhos/cm@ 25°C
pH 7.0 = _____ @ _____ °C Reading _____ µmhos/cm @ _____ °C
pH 10.0 = _____ @ _____ °C Turbidity Meter: _____
Dissolved Oxygen Meter: _____ Other: PID 117 ppm

	Total Volume Discharged	Rate of Discharge	Time	Temp	pH	Specific* Conductance	Turbidity or D.O.	Clarity, Odor PID Readings, Other:
	5 gal	No parameters	1440 taken					Mainly Fuel odor. Abd.
3/11/94	10 gal		1445	17.2	6.64	0.681	T 45 DO 2.78	0.02 % oil globules. H2O fairly clear
	15 gal		1450	16.9	6.35	0.666	T 215 DO 2.37	0.02 % sal nod. Ant oil globules
	23 gal		1456	16.8	6.35	0.666	T 250 DO 2.78	0.02 % sal nod. Ant oil globules H2O fairly clear

Development Completed at 23 Gallons Discharged. Date: 3/11/94 Time: 1456
Criteria: Stable Chemistry, 5 well casing volumes purged Personnel: B. DeAngelis

* Specific Conductance readings temperature compensated to 25°C, if not, report temperatures at which reading obtained.

PRC Environmental Management, Inc.

WELL DEVELOPMENT DATA SHEET

BORING NO. _____ WELL NO. MW11-40 Sheet ___ of ___

Project _____
Project No. _____
Date(s) of Installation _____
Date(s) of Development 3/14/94
Personnel/Company _____
B. De Angelis B. Schuller
Type of Rig Used _____

Casing Diameter/Type 4"
Borehole Diameter 10"
Screened Interval(s) _____
Total Length of Well Casing _____
Measured Total Depth (TOC) Initial 17.6
DTP 9.18 Final _____
Initial Depth to Water (TOC) 7.14 Date 3/11/94 Time 1600
Stabilized Depth to Water (TOC) _____ Date _____ Time _____

DEVELOPMENT

TECHNIQUE(S)	EQUIPMENT TYPE/CAPACITY
___ Jetting (Airlift)	
___ Surge Block	
X Bailing	1" stainless steel
___ Pumping	
___ Other	

PURGE VOLUME CALCULATION

Casing Volume:
8.41 Ft. of water x 0.65 Gallons/Foot
= 5.47 Gallons per Single Casing Volume
5.47 x 5 = 27.4

Sand Pack Volume:
_____ Ft. of Saturated Sand Pack
x _____ Gallons/Foot (borehole diameter)
= _____ Gallons (in borehole)
- _____ Gallons of Casing Vol. for Saturated Interval
= _____ x 0.3 (assuming porosity = 30%)
= _____ Gallons Within Sand Pack

FLUIDS ADDED

Lost Drilling Fluid: _____ Gallons
Lost Purge Water: _____ Gallons
Water During Installation: _____ Gallons
Total Fluids Added: _____ Gallons
Source of Added Water: _____
Parameters of Added Water Measured: Y N
Sample Collected of Added Water: Y N
Sample Designation of Added Water: _____

Single Purge Volume: _____ Gallons (Casing Vol. + Sand Pack Vol. + Fluids Added)
Minimum Purge Volume: _____ Gallons
Actual Purge Volume: _____ Gallons
Volume Measured by: _____
Rate of Development _____ Gallons/Minute (Hour,Day)
Pumping Rate/Depth _____ @ ____ Ft. (Below Grd.)
Immiscible Phases Present: Y N Thickness _____
Calibration Date _____ See Sheet ____ of ____

INSTRUMENT CALIBRATION

3/14/94 Std. Sol.

pH Meter: Horiba Spec. Conductance Meter: _____
pH 4.0 = _____ @ _____ °C Standard _____ µmhos/cm@ 25°C
pH 7.0 = _____ @ _____ °C Reading _____ µmhos/cm @ _____ °C
pH 10.0 = _____ @ _____ °C Turbidity Meter: _____
Dissolved Oxygen Meter: _____ Other: PID - 112 ppm

3/14/94

Total Volume Discharged	Rate of Discharge	Time	Temp	pH	Specific* Conductance	Turbidity or D.O.	Clarity, Odor PID Readings, Other:
10 gal	Bailed	0932	15.1	6.30	0.283	T 999 5.23 DO	small oil globules, oil/sh 0.01 Rad - HC Faint odor, cloudy
15	"	0937	15.0	6.47	0.241	T 999 5.02 DO	S.H. HC odor sal conc as above
45 gal	"	0950	15.0	6.27	0.232	T 999 5.22 DO	sal 0.0 HC. as above

Development Completed at 3/14/94 Gallons Discharged. 45 gal Date: _____ Time: 0950
Criteria: _____ Personnel: _____

* Specific Conductance readings temperature compensated to 25°C, if not, report temperatures at which reading obtained.

APPENDIX G

GROUNDWATER SAMPLING DATA SHEETS

GROUND WATER SAMPLING DATA SHEET

PAGE 1 OF 1

WELL NUMBER MW10-02

DATE 3/29/94

PROJECT PJ. Moldte

PROJECT No. 044024BIROSFW

WELL LOCATION

SAMPLING DATE(S) 3/29/94 1150

SAMPLING PERSONNEL G. KERSTEN, J. GOULD

STATION ELEVATION ____ GND ____ TOC ____

STATIC WATER LEVEL(from TOC) 7.60

WELL STICK UP

STATIC ELEVATION

WELL DEPTH 9.92 MEAS ✓ RPTD ____

FEET OF WATER 2.32

GALLONS/FOOT .652

CASING VOLUME 1.51 x 3 = 4.53

IMMISCIBLE PHASES PRESENT YES ____ NO X

TYPE

MEASURED WITH

PID READINGS (backgrnd)

PID READINGS (TOC)

WELL INSTALLED BY

INSTALLATION DATE

DEVELOPMENT DATE(S)

FIELD CHEMISTRY CALIBRATIONS Hor. ba Autocal

DATE/TIME 3/29/94 0745

SPEC. CONDUCTANCE: STANDARD ____ UMHOS/CM AT 25C READING ____ UMHOS/CM AT ____ C

pH: pH 4.00 = ____ AT ____ C pH 7.00 = ____ AT ____ C pH 10.00 = ____ AT ____ C SLOPE ____

DISSOLVED OXYGEN: D.O. METER ____ MG/L AT ____ C PID: CALIBRATION GAS ____ PPM ____ SPAN ____ READING ____

	TIME	DISCHARGE RATE (GPM)	DISSOLVED OXYGEN (MG/L)	pH	Eh (ORP)	TEMP (C)	SPECIFIC CONDUCT. (UMHOS/CM AT C)	TURBID. (NTU)	CUMULATIVE VOL. OF WATER REMOVED (PURGED) GALLONS	CASING VOLS	PID/OVA READING LOCATION	VALUE	COMMENTS
PUMPED	WELL WAS DEVELOPED FROM 3/8/94 THROUGH 3/28/94. 19.2 gallons												
	TOTAL WAS PURGED FROM well. parameters APPEARED STABLE.												
	THIS -long DURATION (EXTENDED) PURGING IS CONSIDERED												
	SUFFICIENT SO THAT THE WELL MAY BE SAMPLED UPON RECHARGE.												
	See Well DEVELOPMENT FORM DATED 3/8/94 FOR RECORDED												
	PARAMETERS.												
	3/29 H_2O level 7.30 JUST PRIOR TO SAMPLING												
BAILED													

pumped w/ stainless steel bailer

Sampled w/ disp. bailer

PUMPED PARAMETERS STABLE (Y/N) ____ PUMPED=BAILED PARAMETERS (Y/N) ____ CONDITION OF WELL: ____

REMARKS

FIELD EQUIPMENT

pH METER ____ SERIAL NUMBER ____

SPEC. COND. METER ____ SERIAL NUMBER ____

PUMP ____ SERIAL NUMBER ____

BAILER ____ SIZE ____

WATER LEVEL METER ____ SERIAL NUMBER ____

D. O. METER ____ SERIAL NUMBER ____

FILTER APPARATUS ____ FILTERS ____

TEMPERATURE MEASURE

INTERFACE PROBE ____ SERIAL NUMBER ____

PID/OVA ____ SERIAL NUMBER ____

FIELD CHEMISTRY CALIBRATIONS

FRACTIONS

NUMBER OF BOTTLES

SAMPLE DEPTH

FIELD NOTEBOOK

SAMPLE METHOD

DISCHARGE WATER CONTAINERIZED

YES ____ NO ____

C:\FORMS\GRH2ONEW.FRM mjb 7-30-92

SAMPLE DATE/TIME 3/29/94 / 1150

PRC GROUND WATER SAMPLING DATA SHEET

PAGE 1 OF 1

WELL NUMBER MW10-~~04~~04 (REF)

DATE 3/23/94

PROJECT PT. MOLATE

PROJECT No. 0441-0248 IRQSFW

WELL LOCATION

SAMPLING DATE(S) 3/24/94 1415

SAMPLING PERSONNEL G. KORSTEN, B. D'ANGELIS

STATION ELEVATION ____ GND ____ TOC ____

STATIC WATER LEVEL (from TOC) 16.57

WELL STICK UP

STATIC ELEVATION

WELL DEPTH 21.12 MEAS ✓ RPTD

FEET OF WATER 4.55

GALLONS/FOOT .652

CASING VOLUME 2.96 x 3 = 8.89

IMMISCIBLE PHASES PRESENT YES ____ NO ____

TYPE FLUSH MOUNT, PVC, 4"

MEASURED WITH

PID READINGS (backgrnd)

PID READINGS (TOC)

WELL INSTALLED BY

INSTALLATION DATE

DEVELOPMENT DATE(S)

FIELD CHEMISTRY CALIBRATIONS Horiba Autocalibrated

DATE/TIME 3/23/94 0730

SPEC. CONDUCTANCE: STANDARD ____ UMHOS/CM AT 25C READING ____ UMHOS/CM AT ____ C

pH: pH 4.00 = ____ AT ____ C pH 7.00 = ____ AT ____ C pH 10.00 = ____ AT ____ C SLOPE ____

DISSOLVED OXYGEN: D.O. METER ____ MG/L AT ____ C PID: CALIBRATION GAS ____ PPM ____ SPAN ____ READING ____

PUMPED

TIME	DISCHARGE RATE (GPM)	DISSOLVED OXYGEN (MG/L)	pH	Eh (ORP)	TEMP (C)	SPECIFIC CONDUCT. (~~UMHOS/CM~~ mS/cm) AT C	TURBID. (NTU)	CUMULATIVE VOL. OF WATER REMOVED (PURGED) GALLONS	CASING VOLS	PID/OVA READING LOCATION	VALUE	COMMENTS
1550	1 GAL/M	1.12	7.54	—	17.0	6.09	470	2	.67			SLIGHT H.C. ODOR ~~[illegible]~~ MINOR OIL SHEEN
1600	11	1.84	7.63	—	16.5	5.55	999	3.5	1.2			
1605	"	9.41	7.68	—	16.9	5.29	999	4.0	1.35			0.25% sal PURGED DRY
1406	WELL	FULLY	RECHARGED	TO	14.59	FEET	BELOW	TOC				

BAILED

PUMPED PARAMETERS STABLE (Y/N) ____ PUMPED=BAILED PARAMETERS (Y/N) ____ CONDITION OF WELL: ____

REMARKS

FIELD EQUIPMENT

pH METER ____ SERIAL NUMBER ____

SPEC. COND. METER ____ SERIAL NUMBER ____

PUMP ____ SERIAL NUMBER ____

BAILER ____ SIZE ____

WATER LEVEL METER ____ SERIAL NUMBER ____

D. O. METER ____ SERIAL NUMBER ____

FILTER APPARATUS ____ FILTERS ____

TEMPERATURE MEASURE

INTERFACE PROBE ____ SERIAL NUMBER ____

PID/OVA ____ SERIAL NUMBER ____

FIELD CHEMISTRY CALIBRATIONS

FRACTIONS

NUMBER OF BOTTLES

SAMPLE DEPTH

FIELD NOTEBOOK

SAMPLE METHOD

DISCHARGE WATER CONTAINERIZED

YES ____ NO ____

C:\FORMS\GRH2ONEW.FRM

Sample DATE/TIME 3/24/94 / 1415 w/ 2" teflon bailer

pumped w/ 2" Grundfos

PRC GROUND WATER SAMPLING DATA SHEET

PAGE 1 OF 1

WELL NUMBER MW10-05

DATE 3/23/94

PROJECT Pt. Molate

PROJECT No. 0441-0248-FZ0SFW

WELL LOCATION

SAMPLING DATE(S) 3/24/94 1530

SAMPLING PERSONNEL GKERSTEN, B. DANAKIS

STATION ELEVATION _____ GND ___ TOC ___

STATIC WATER LEVEL(from TOC) 16.92

WELL STICK UP

STATIC ELEVATION

WELL DEPTH 19.46 MEAS ✓ RPTD

FEET OF WATER 2.54

GALLONS/FOOT .652

CASING VOLUME 1.65 x 3 = 4.96

IMMISCIBLE PHASES PRESENT YES ___ NO ✓

TYPE

MEASURED WITH

PID READINGS (backgrnd)

PID READINGS (TOC)

WELL INSTALLED BY

INSTALLATION DATE

DEVELOPMENT DATE(S)

FIELD CHEMISTRY CALIBRATIONS

DATE/TIME 3/23/94 0730 SPEC. CONDUCTANCE: STANDARD Horiba Autocalibrated UMHOS/CM AT 25C READING ___ UMHOS/CM AT ___ C

pH: pH 4.00 = ___ AT ___ C pH 7.00 = ___ AT ___ C pH 10.00 = ___ AT ___ C SLOPE ___

DISSOLVED OXYGEN: D.O. METER ___ MG/L AT ___ C PID: CALIBRATION GAS ___ PPM ___ SPAN ___ READING ___

w/ Teflon bailer

	TIME	DISCHARGE RATE (GPM)	DISSOLVED OXYGEN (MG/L)	pH	Eh (ORP)	TEMP (C)	SPECIFIC CONDUCT. (UMHOS/CM AT C)	TURBID. (NTU)	CUMULATIVE VOL. OF WATER REMOVED (PURGED) GALLONS	CASING VOLS.	PID/OVA READING LOCATION	VALUE	COMMENTS
PUMPED	1632	2 gpm	2.62	7.22	—	16.1	8.6	618	IN TIM	—			2.5 GALLONS PURGED WELL WENT DRY
	1634												NO OTHER PARAMETERS ARE TO BE COLLECTED
													AS PUMP HOSE CONTAINED ALL WELL
													WATER
	3/24/94 1530	well Recovered to 16.82 feet BTOC											
BAILED													

PUMPED PARAMETERS STABLE (Y/N) ___ PUMPED=BAILED PARAMETERS (Y/N) ___ CONDITION OF WELL: ___

REMARKS

FIELD EQUIPMENT

pH METER ___ SERIAL NUMBER ___

SPEC. COND. METER ___ SERIAL NUMBER ___

PUMP ___ SERIAL NUMBER ___

BAILER ___ SIZE ___

WATER LEVEL METER ___ SERIAL NUMBER ___

D. O. METER ___ SERIAL NUMBER ___

FILTER APPARATUS ___ FILTERS ___

TEMPERATURE MEASURE ___

INTERFACE PROBE ___ SERIAL NUMBER ___

PID/OVA ___ SERIAL NUMBER ___

FIELD CHEMISTRY CALIBRATIONS

FRACTIONS

NUMBER OF BOTTLES

SAMPLE DEPTH

FIELD NOTEBOOK

SAMPLE METHOD

DISCHARGE WATER CONTAINERIZED

YES ___ NO ___

C:\FORMS\GRH2ONEW.FRM /mjb /7-30-92

Sample DATE/TIME 3/24/94 / 1530 w/ teflon bailer

PRC GROUND WATER SAMPLING DATA SHEET

PAGE ___ OF ___

WELL NUMBER MW10-08

DATE 3/24/94

PROJECT R. McIntyre

PROJECT No. 1044-0248TRQSFW

WELL LOCATION

SAMPLING DATE(S) 3/25/94 1030

SAMPLING PERSONNEL G. KERSTEN, B. DIMINGERS

STATION ELEVATION ___ GND ___ TOC ___

STATIC WATER LEVEL(from TOC) 11.37

WELL STICK UP

STATIC ELEVATION

WELL DEPTH 24.95 MEAS ✓ RPTD

FEET OF WATER 13.58

GALLONS/FOOT .652

CASING VOLUME 8.8 x 3 = 26.56

IMMISCIBLE PHASES PRESENT YES ___ NO ✓

TYPE

MEASURED WITH

PID READINGS (backgrnd)

PID READINGS (TOC)

WELL INSTALLED BY

INSTALLATION DATE

DEVELOPMENT DATE(S)

FIELD CHEMISTRY CALIBRATIONS Horiba autocalibrated

DATE/TIME 3/24/94 0740 SPEC. CONDUCTANCE: STANDARD ___ UMHOS/CM AT 25C READING ___ UMHOS/CM AT ___ C

pH: pH 4.00 = ___ AT ___ C pH 7.00 = ___ AT ___ C pH 10.00 = ___ AT ___ C SLOPE ___

DISSOLVED OXYGEN: D.O. METER ___ MG/L AT ___ C PID: CALIBRATION GAS ___ PPM ___ SPAN ___ READING ___

	TIME	DISCHARGE RATE (GPM)	DISSOLVED OXYGEN (MG/L)	pH	Eh (ORP)	TEMP (C)	SPECIFIC CONDUCT. (~~UMHOS/CM~~ mS/cm AT C)	TURBID. (NTU)	CUMULATIVE VOL. OF WATER REMOVED (PURGED) GALLONS	CASING VOLS	PID/OVA READING LOCATION	VALUE	COMMENTS
PUMPED	1619	1.9	2.79	6.79	—	16.9	1.27	264	5	0.57			
	1622	"	3.50	6.68	—	16.8	1.30	209	10	1.14			
	1624	"	5.54	6.77	—	16.9	1.18	308	15	1.71			
	1627	"	4.67	6.85	—	16.9	1.25	380	20	2.28			well purged dry
	3/25/94	1030	H2O	level	15	[illegible]	14.49						well sampled w/ TEFLON BAILER ✓
BAILED													

PUMPED PARAMETERS STABLE (Y/N) ___ PUMPED=BAILED PARAMETERS (Y/N) ___ CONDITION OF WELL: ___

REMARKS

FIELD EQUIPMENT

pH METER ___ SERIAL NUMBER ___

SPEC. COND. METER ___ SERIAL NUMBER ___

PUMP ___ SERIAL NUMBER ___

BAILER ___ SIZE ___

WATER LEVEL METER ___ SERIAL NUMBER ___

D. O. METER ___ SERIAL NUMBER ___

FILTER APPARATUS ___ FILTERS ___

TEMPERATURE MEASURE

INTERFACE PROBE ___ SERIAL NUMBER ___

PID/OVA ___ SERIAL NUMBER ___

FIELD CHEMISTRY CALIBRATIONS

FRACTIONS

NUMBER OF BOTTLES

SAMPLE DEPTH

FIELD NOTEBOOK

SAMPLE METHOD

DISCHARGE WATER CONTAINERIZED

YES ___ NO ___

C:\FORMS\GRH2ONEW.FRM mjb 7-30-92

3/25/94 1030 sample date/time

PRC GROUND WATER SAMPLING DATA SHEET

PAGE ___ OF ___

WELL NUMBER MW10-09

DATE 3/24/94

PROJECT R. MOLATE

PROJECT No. 044-0248IRQSFW

WELL LOCATION

SAMPLING DATE(S) 3/25/94 0915

SAMPLING PERSONNEL G. KERSTEN, B. D'ANGELIS

STATION ELEVATION ___ GND ___ TOC ___

STATIC WATER LEVEL (from TOC) 8.71

WELL STICK UP

STATIC ELEVATION

WELL DEPTH 19.74 MEAS ✓ RPTD ___

FEET OF WATER 11.03

GALLONS/FOOT .652

CASING VOLUME 7.19 x 3 = 21.57

IMMISCIBLE PHASES PRESENT YES ___ NO ✓

TYPE

MEASURED WITH

PID READINGS (backgrnd)

PID READINGS (TOC)

WELL INSTALLED BY

INSTALLATION DATE

DEVELOPMENT DATE(S)

FIELD CHEMISTRY CALIBRATIONS Horiba autocalibrated

DATE/TIME 3/24/94 0240 SPEC. CONDUCTANCE: STANDARD ___ UMHOS/CM AT 25C READING ___ UMHOS/CM AT ___ C

pH: pH 4.00 = ___ AT ___ C pH 7.00 = ___ AT ___ C pH 10.00 = ___ AT ___ C SLOPE ___

DISSOLVED OXYGEN: D.O. METER ___ MG/L AT ___ C PID: CALIBRATION GAS ___ PPM ___ SPAN ___ READING ___

	TIME	DISCHARGE RATE (GPM)	DISSOLVED OXYGEN (MG/L)	pH	Eh (ORP)	TEMP (C)	SPECIFIC CONDUCT. (~~UMHOS/CM~~ mS/cm AT C)	TURBID. (NTU)	CUMULATIVE VOL. OF WATER REMOVED (PURGED) GALLONS	CASING VOLS.	PID/OVA READING LOCATION	VALUE	COMMENTS
PUMPED	11:58	10 Bailer	3.15	6.94	—	16.4	.908	10	4	.55			PRESSURE/TURBID METER
	12:17	"	4.35	6.88	—	15.7	.936	104	8	1.1			TURB METER DIFFERENT AFTER ANOTHER DECON
	12:28	"	3.70	6.86	—	15.9	.931	272	12	1.67			
	12:40	"	3.10	6.94	—	16.2	.882	624	16	2.2			PURGED DRY
	3/25/94	H2O level is	9.69	AT	0100	(near	full recovery)						
BAILED													

Switched to Teflon Bailer

PUMPED PARAMETERS STABLE (Y/N) ___ PUMPED=BAILED PARAMETERS (Y/N) ___ CONDITION OF WELL: ___

REMARKS

FIELD EQUIPMENT

pH METER ___ SERIAL NUMBER ___

SPEC. COND. METER ___ SERIAL NUMBER ___

PUMP ___ SERIAL NUMBER ___

BAILER ___ SIZE ___

WATER LEVEL METER ___ SERIAL NUMBER ___

D. O. METER ___ SERIAL NUMBER ___

FILTER APPARATUS ___ FILTERS ___

TEMPERATURE MEASURE

INTERFACE PROBE ___ SERIAL NUMBER ___

PID/OVA ___ SERIAL NUMBER ___

FIELD CHEMISTRY CALIBRATIONS

FRACTIONS

NUMBER OF BOTTLES

SAMPLE DEPTH

FIELD NOTEBOOK

SAMPLE METHOD

DISCHARGE WATER CONTAINERIZED

YES ___ NO ___

C:\FORMS\GRH2ONEW.FRM /mjb /7-30-92

Sample DATE/TIME 3/25/94 0915

PRC GROUND WATER SAMPLING DATA SHEET

PAGE 1 OF 1

WELL NUMBER MW10-10

DATE 3/24/94

PROJECT Pt. Molate

PROJECT No. 0441-024-01-2025FW

WELL LOCATION

SAMPLING DATE(S) 3/24/94 1047

SAMPLING PERSONNEL B. D'Angelis / G. Kersten

STATION ELEVATION _____ GND ___ TOC ___

STATIC WATER LEVEL (from TOC) 9.74

WELL STICK UP

STATIC ELEVATION

WELL DEPTH 21.55 MEAS ✓ RPTD

FEET OF WATER 11.81

GALLONS/FOOT .652

CASING VOLUME 7.7 x 3 = 23.10

IMMISCIBLE PHASES PRESENT YES ___ NO ___

TYPE

MEASURED WITH

PID READINGS (backgrnd)

PID READINGS (TOC)

WELL INSTALLED BY

INSTALLATION DATE

DEVELOPMENT DATE(S)

FIELD CHEMISTRY CALIBRATIONS Hach 2100A Auto calibrated

DATE/TIME 3/24/94 0740

SPEC. CONDUCTANCE: STANDARD _____ UMHOS/CM AT 25C READING _____ UMHOS/CM AT ___ C

pH: pH 4.00 = _____ AT _____ C pH 7.00 = _____ AT _____ C pH 10.00 = _____ AT _____ C SLOPE _____

DISSOLVED OXYGEN: D.O. METER _____ MG/L AT ___ C PID: CALIBRATION GAS _____ PPM _____ SPAN _____ READING _____

2" Teflon bailer

	TIME	DISCHARGE RATE (GPM)	DISSOLVED OXYGEN (MG/L)	pH	Eh (ORP)	TEMP (C)	SPECIFIC CONDUCT. (~~UMHOS/CM~~ mS/cm) AT C)	TURBID. (NTU)	CUMULATIVE VOL. OF WATER REMOVED (PURGED) GALLONS	CASING VOLS	PID/OVA READING LOCATION	VALUE	COMMENTS
PUMPED	1002	1.66	1.66	6.23	—	16.9	.748	10	5	.65			problem w/ turb. meter
	1005	1.66	0.85	6.31	—	16.9	.764	10	10	1.30			" (~~relatively clear~~ moderately cloudy)
	1008	1.66	1.22	6.41	—	16.9	.812	10	16	2.1			" well purged dry
	1021	0.15	2.64	6.62		16.9	.801	999	18	2.3			" reduce pump rate. Recharge at .15 GPM
													to sign to continue purge, until entire
													well is formation
													water will sample
													when enough volume
													is present to sample
BAILED													

PUMPED PARAMETERS STABLE (Y/N) ___ PUMPED=BAILED PARAMETERS (Y/N) ___ CONDITION OF WELL:

REMARKS

FIELD EQUIPMENT

pH METER _____ SERIAL NUMBER _____

SPEC. COND. METER _____ SERIAL NUMBER _____

PUMP _____ SERIAL NUMBER _____

BAILER _____ SIZE _____

WATER LEVEL METER _____ SERIAL NUMBER _____

D. O. METER _____ SERIAL NUMBER _____

FILTER APPARATUS _____ FILTERS _____

TEMPERATURE MEASURE

INTERFACE PROBE _____ SERIAL NUMBER _____

PID/OVA _____ SERIAL NUMBER _____

FIELD CHEMISTRY CALIBRATIONS

FRACTIONS

NUMBER OF BOTTLES

SAMPLE DEPTH

FIELD NOTEBOOK

SAMPLE METHOD

DISCHARGE WATER CONTAINERIZED

YES _____ NO _____

C:\FORMS\GRH2ONEW.FRM /mjb /7-30-92

3/24/94 Sample time 1047 w/ 2" Teflon bailer

PRC GROUND WATER SAMPLING DATA SHEET

PAGE 1 OF 1

WELL NUMBER MW10-11

DATE 3/28/94

PROJECT Pt. Mdate

PROJECT No. 044-0248.IROSFW

WELL LOCATION

SAMPLING DATE(S) 3/29/94 1210 (GCK)

SAMPLING PERSONNEL J Gould, E Karsten

STATION ELEVATION ____ GND ____ TOC ____

STATIC WATER LEVEL (from TOC) 9.19

WELL STICK UP

STATIC ELEVATION

WELL DEPTH 21.85 MEAS ____ RPTD ____

FEET OF WATER 12.66

GALLONS/FOOT .652

CASING VOLUME 8.3 x 3 24.9

DEVELOPMENT DATE(S) 3/17 - 3/28

IMMISCIBLE PHASES PRESENT YES ____ NO ✓

TYPE

MEASURED WITH

PID READINGS (backgrnd)

PID READINGS (TOC)

WELL INSTALLED BY

INSTALLATION DATE

FIELD CHEMISTRY CALIBRATIONS Horiba Auto Calibrated

DATE/TIME 3/28/94 0730

SPEC. CONDUCTANCE: STANDARD ____ UMHOS/CM AT 25C READING ____ UMHOS/CM AT ____ C

pH: pH 4.00 = ____ AT ____ C pH 7.00 = ____ AT ____ C pH 10.00 = ____ AT ____ C SLOPE ____

DISSOLVED OXYGEN: D.O. METER ____ MG/L AT ____ C PID: CALIBRATION GAS ____ PPM ____ SPAN ____ READING ____

	TIME	DISCHARGE RATE (GPM)	DISSOLVED OXYGEN (MG/L)	pH	Eh (ORP)	TEMP (C)	SPECIFIC CONDUCT. (UMHOS/CM AT C)	TURBID. (NTU)	CUMULATIVE VOL. OF WATER REMOVED (PURGED) GALLONS	CASING VOLS.	PID/OVA READING LOCATION	VALUE	COMMENTS
PUMPED	0905	bailed	2.05	6.74		17.8	~~.674~~ .667	442	3				clear,
PUMPED	0912	↓	3.10	6.85		17.8	.708	999	7				silty
PUMPED	0921	bailed	4.71	6.98		18.0	.753	999	12				brown, cloudy, sheen
PUMPED	0932	↓	3.45	6.97		18.0	.730	999	17				brown, cloudy, light sheen & odor
PUMPED	0938	↓	3.71	7.03		18.2	.736	999	21				brown, silty (purged dry)
		H2O level prior to sampling						16.11	BTOC				
BAILED													
BAILED													

purged w/ stainless steel bailer

sampled w/ disp. bailer

PUMPED PARAMETERS STABLE (Y/N) ____ PUMPED=BAILED PARAMETERS (Y/N) ____ CONDITION OF WELL: ____

REMARKS

FIELD EQUIPMENT

pH METER ____ SERIAL NUMBER ____

SPEC. COND. METER ____ SERIAL NUMBER ____

PUMP ____ SERIAL NUMBER ____

BAILER ____ SIZE ____

WATER LEVEL METER ____ SERIAL NUMBER ____

D. O. METER ____ SERIAL NUMBER ____

FILTER APPARATUS ____ FILTERS ____

TEMPERATURE MEASURE

INTERFACE PROBE ____ SERIAL NUMBER ____

PID/OVA ____ SERIAL NUMBER ____

FIELD CHEMISTRY CALIBRATIONS

FRACTIONS

NUMBER OF BOTTLES

SAMPLE DEPTH

FIELD NOTEBOOK

SAMPLE METHOD

DISCHARGE WATER CONTAINERIZED

YES ____ NO ____

C:\FORMS\GRH2ONEW.FRM /mjb /7-30-92

SAMPLE DATE/TIME 3/29/94 1210 ~~[illegible]~~ GCK

PRC GROUND WATER SAMPLING DATA SHEET

PAGE 1 OF 1

WELL NUMBER MW10-12

DATE 3/21/94

PROJECT #044-0248IRQSFW

PROJECT ~~No.~~ NFO Point Molate

STATION ELEVATION _____ GND ___ TOC ___ IMMISCIBLE PHASES PRESENT YES ___ NO X

STATIC WATER LEVEL(from TOC) 2.94 TYPE _____

WELL LOCATION _____ WELL STICK UP _____ MEASURED WITH _____

SAMPLING DATE(S) 3/21/94 STATIC ELEVATION _____ PID READINGS (backgrnd) _____

SAMPLING PERSONNEL B. Johnson, B. Schwalb WELL DEPTH 18.14 MEAS ✓ RPTD ___ PID READINGS (TOC) _____

FEET OF WATER 15.2 WELL INSTALLED BY _____

GALLONS/FOOT 0.653 INSTALLATION DATE _____

CASING VOLUME 9.93 x 3 = 29.8 DEVELOPMENT DATE(S) _____

FIELD CHEMISTRY CALIBRATIONS Horiba Water Quality Meter Auto calibrated 3/21/94 @ 0935

DATE/TIME _____ SPEC. CONDUCTANCE: STANDARD _____ UMHOS/CM AT 25C READING _____ UMHOS/CM AT ___ C

pH: pH 4.00 = _____ AT _____ C pH 7.00 = _____ AT _____ C pH 10.00 = _____ AT _____ C SLOPE _____

DISSOLVED OXYGEN: D.O. METER _____ MG/L AT ___ C PID: CALIBRATION GAS _____ PPM _____ SPAN _____ READING _____

2" Grundfos

	TIME	DISCHARGE RATE (GPM)	DISSOLVED OXYGEN (MG/L)	pH	Eh (ORP)	TEMP (C)	SPECIFIC CONDUCT. (UMHOS/CM AT C)	TURBID. (NTU)	CUMULATIVE VOL. OF WATER REMOVED (PURGED) GALLONS	CASING VOLS	PID/OVA READING LOCATION	PID/OVA READING VALUE	COMMENTS
PUMPED	1228		1.22	6.77		17.1	mS/cm 0.659	153	5				0.02% sal, brown Fairly clear, bottom disturb
PUMPED	1231		0.71	6.83		17.1	0.607	226	10				0.02% sal. as above
PUMPED	1234		0.07	6.74		17.0 ~~16.9~~	0.662	206	15				0.02% sal cloudy, brown.
PUMPED	1236		0.23	6.83		17.0	0.723	306	20				0.03% sal Fairly clear.
PUMPED	1239		0.46	6.81		17.1	0.769	501	25				0.03% sal as above
PUMPED	1240	Pumped dry - will let recharge							~~30~~ 31	BLD			water v. silty. brown
PUMPED	1255		0.41	6.85		17.4	0.745	~~999~~ 569	35				0.03% Fairly clear. ~~as above~~
BAILED													
BAILED													

PUMPED PARAMETERS STABLE (Y/N) Y | PUMPED=BAILED PARAMETERS (Y/N) ___ | CONDITION OF WELL: Good

REMARKS _____

FIELD EQUIPMENT

pH METER _____ SERIAL NUMBER _____

SPEC. COND. METER _____ SERIAL NUMBER _____

PUMP _____ SERIAL NUMBER _____

BAILER _____ SIZE _____

WATER LEVEL METER _____ SERIAL NUMBER _____

D. O. METER _____ SERIAL NUMBER _____

FILTER APPARATUS _____ FILTERS _____

TEMPERATURE MEASURE _____

INTERFACE PROBE _____ SERIAL NUMBER _____

PID/OVA _____ SERIAL NUMBER _____

FIELD CHEMISTRY CALIBRATIONS

FRACTIONS _____

NUMBER OF BOTTLES _____

SAMPLE DEPTH _____

FIELD NOTEBOOK _____

SAMPLE METHOD _____

DISCHARGE WATER CONTAINERIZED

YES _____ NO _____

C:\FORMS\GRH2ONEW.FRM mjb 7-30-92

Sampled MW 10-12 @ 1300 3/21/94 w/ Grundfos
VOAs collected w/ bailer

PRC GROUND WATER SAMPLING DATA SHEET

PAGE 1 OF 1

WELL NUMBER MW10-14

DATE 3/21/94

PROJECT _____ STATION ELEVATION _____ GND ___ TOC ___ IMMISCIBLE PHASES PRESENT YES ___ NO ✓

PROJECT No. 044-0248IRQSFW STATIC WATER LEVEL(from TOC) 6.93 TYPE _____

WELL LOCATION _____ WELL STICK UP _____ MEASURED WITH _____

SAMPLING DATE(S) 3/21/94 STATIC ELEVATION ~~6.93~~ 8.40 PID READINGS (backgrnd) _____

SAMPLING PERSONNEL G. DeAngelis, B. Schuller WELL DEPTH 19.38 MEAS ✓ RPTD ___ PID READINGS (TOC) _____

FEET OF WATER 12.45 WELL INSTALLED BY _____

GALLONS/FOOT 0.653 INSTALLATION DATE _____

CASING VOLUME 8.13 X 3 = 24.4 DEVELOPMENT DATE(S) _____

FIELD CHEMISTRY CALIBRATIONS Autocalibration Hanna 3/21/94 @ 0935.

DATE/TIME _____ SPEC. CONDUCTANCE: STANDARD _____ UMHOS/CM AT 25C READING _____ UMHOS/CM AT ___ C

pH: pH 4.00 = _____ AT _____ C pH 7.00 = _____ AT _____ C pH 10.00 = _____ AT _____ C SLOPE _____

DISSOLVED OXYGEN: D.O. METER _____ MG/L AT ___ C PID: CALIBRATION GAS _____ PPM _____ SPAN _____ READING _____

2" Grundfos

	TIME	DISCHARGE RATE (GPM)	DISSOLVED OXYGEN (MG/L)	pH	Eh (ORP)	TEMP (C)	SPECIFIC CONDUCT. (UMHOS/CM AT C)	TURBID. (NTU)	CUMULATIVE VOL. OF WATER REMOVED (PURGED) GALLONS	CASING VOLS.	PID/OVA READING LOCATION	PID/OVA READING VALUE	COMMENTS
PUMPED	0948		4.12	6.28		15.2	0.363 mho/cm	89	5				Clear/ Sal = 0.01 %
PUMPED	0950		3.62	5.91		15.0	0.276	363	10				Slight turbidity, brown Sal = 0.01 %
PUMPED	0953		4.43	6.16		15.0	0.310	410	15				sal = 0.01 % as above
PUMPED	0955		4.62	6.52		15.1	0.390	290	20				sal = 0.01 % - as above
PUMPED	0959		5.01	6.53		15.0	0.401	999	25				V. turbid, brown sal = 0.01 %
BAILED													
BAILED													

PUMPED PARAMETERS STABLE (Y/N) ___ PUMPED=BAILED PARAMETERS (Y/N) ___ CONDITION OF WELL: _____

REMARKS _____

FIELD EQUIPMENT

pH METER _____ SERIAL NUMBER _____

SPEC. COND. METER _____ SERIAL NUMBER _____

PUMP _____ SERIAL NUMBER _____

BAILER _____ SIZE _____

WATER LEVEL METER _____ SERIAL NUMBER _____

D. O. METER _____ SERIAL NUMBER _____

FILTER APPARATUS _____ FILTERS _____

TEMPERATURE MEASURE _____

INTERFACE PROBE _____ SERIAL NUMBER _____

PID/OVA _____ SERIAL NUMBER _____

FIELD CHEMISTRY CALIBRATIONS

FRACTIONS _____

NUMBER OF BOTTLES _____

SAMPLE DEPTH _____

FIELD NOTEBOOK _____

SAMPLE METHOD _____

DISCHARGE WATER CONTAINERIZED

YES _____ NO _____

C:\FORMS\GRH2ONEW.FRM /mjb /7-30-92

Sampled MW10-14 3/21/94 @ 1045, w/ Grundfos, VOAs collected w/ Bailer

PRC GROUND WATER SAMPLING DATA SHEET

PAGE 1 OF 1

WELL NUMBER MW 10-15

DATE 3/28/94

PROJECT R.I. Molate

PROJECT No. 044-0248 IRQSFW

WELL LOCATION

SAMPLING DATE(S)

SAMPLING PERSONNEL G. KERSTEN, J. GOULD

STATION ELEVATION ____ GND ____ TOC ____

STATIC WATER LEVEL (from TOC) 15.53

WELL STICK UP

STATIC ELEVATION

WELL DEPTH 15.63 MEAS ✓ RPTD

FEET OF WATER 0.10

GALLONS/FOOT

CASING VOLUME

IMMISCIBLE PHASES PRESENT YES ____ NO ✓

TYPE

MEASURED WITH

PID READINGS (backgrnd)

PID READINGS (TOC)

WELL INSTALLED BY

INSTALLATION DATE

DEVELOPMENT DATE(S)

FIELD CHEMISTRY CALIBRATIONS

DATE/TIME ____ SPEC. CONDUCTANCE: STANDARD ____ UMHOS/CM AT 25C READING ____ UMHOS/CM AT ____ C

pH: pH 4.00 = ____ AT ____ C pH 7.00 = ____ AT ____ C pH 10.00 = ____ AT ____ C SLOPE ____

DISSOLVED OXYGEN: D.O. METER ____ MG/L AT ____ C PID: CALIBRATION GAS ____ PPM ____ SPAN ____ READING ____

	TIME	DISCHARGE RATE (GPM)	DISSOLVED OXYGEN (MG/L)	pH	Eh (ORP)	TEMP (C)	SPECIFIC CONDUCT. (UMHOS/CM AT C)	TURBID. (NTU)	CUMULATIVE VOL. OF WATER REMOVED (PURGED) GALLONS	CASING VOLS.	PID/OVA READING LOCATION	VALUE	COMMENTS
3/28/94	NO WATER				NOT		SAMPLEABLE						
PUMPED													
BAILED													

PUMPED PARAMETERS STABLE (Y/N) ____ PUMPED=BAILED PARAMETERS (Y/N) ____ CONDITION OF WELL: ____

REMARKS ____

FIELD EQUIPMENT

pH METER ____ SERIAL NUMBER ____

SPEC. COND. METER ____ SERIAL NUMBER ____

PUMP ____ SERIAL NUMBER ____

BAILER ____ SIZE ____

WATER LEVEL METER ____ SERIAL NUMBER ____

D. O. METER ____ SERIAL NUMBER ____

FILTER APPARATUS ____ FILTERS ____

TEMPERATURE MEASURE ____

INTERFACE PROBE ____ SERIAL NUMBER ____

PID/OVA ____ SERIAL NUMBER ____

FIELD CHEMISTRY CALIBRATIONS

FRACTIONS ____

NUMBER OF BOTTLES ____

SAMPLE DEPTH ____

FIELD NOTEBOOK ____

SAMPLE METHOD ____

DISCHARGE WATER CONTAINERIZED

YES ____ NO ____

C:\FORMS\GRH2ONEW.FRM /mjb /7-30-92

PRC GROUND WATER SAMPLING DATA SHEET

PAGE 1 OF 1

WELL NUMBER ERM 10-01

DATE 3/28/94

PROJECT Ft. McHATE

PROJECT No. 044-0248IRQS FW

WELL LOCATION

SAMPLING DATE(S) 3/28/94 1145

SAMPLING PERSONNEL G KERSTEN, J. GOULD

STATION ELEVATION ____ GND ____ TOC ____

STATIC WATER LEVEL(from TOC) 16.19

WELL STICK UP

STATIC ELEVATION

WELL DEPTH 23.10 MEAS ✓ RPTD ____

FEET OF WATER 6.90

GALLONS/FOOT .652

CASING VOLUME 4.50 x 3 = 13.5

IMMISCIBLE PHASES PRESENT YES ✓ NO ____

TYPE N 0.01 Feet ≤ 0.1

MEASURED WITH

PID READINGS (backgrnd)

PID READINGS (TOC)

WELL INSTALLED BY

INSTALLATION DATE

DEVELOPMENT DATE(S)

FIELD CHEMISTRY CALIBRATIONS pH 2, 7, 10 auto calibrated

DATE/TIME 3/28/94 0730

SPEC. CONDUCTANCE: STANDARD ____ UMHOS/CM AT 25C READING ____ UMHOS/CM AT ____ C

pH: pH 4.00 = ____ AT ____ C pH 7.00 = ____ AT ____ C pH 10.00 = ____ AT ____ C SLOPE ____

DISSOLVED OXYGEN: D.O. METER ____ MG/L AT ____ C PID: CALIBRATION GAS ____ PPM ____ SPAN ____ READING ____

	TIME	DISCHARGE RATE (GPM)	DISSOLVED OXYGEN (MG/L)	pH	Eh (ORP)	TEMP (C)	SPECIFIC CONDUCT. (UMHOS/CM AT C) mS/cm	TURBID. (NTU)	CUMULATIVE VOL. OF WATER REMOVED (PURGED) GALLONS	CASING VOLS.	PID/OVA READING LOCATION	VALUE	COMMENTS
PUMPED	1110	1L Bailer (Disp)	2.10	6.67	—	16.4	.164	>10	2				Strong, pine odor w/ turbidity meter
	1117	"	1.25	6.61	—	16.5	.170	>10	4.5	1			Tan cloudy w/ high concentration of
	1126	"	1.09	6.58		16.7	.172	>10	9	2			white organic matter
	1139	"	1.48	6.62		17.0	.172	>10	13.5	3			Clear, sheen, no organics
BAILED													

Pumped & Sampled w/ Disposable Bailer

PUMPED PARAMETERS STABLE (Y/N) ____ PUMPED=BAILED PARAMETERS (Y/N) ____ CONDITION OF WELL: ____

REMARKS

FIELD EQUIPMENT

pH METER ____ SERIAL NUMBER ____

SPEC. COND. METER ____ SERIAL NUMBER ____

PUMP ____ SERIAL NUMBER ____

BAILER ____ SIZE ____

WATER LEVEL METER ____ SERIAL NUMBER ____

D. O. METER ____ SERIAL NUMBER ____

FILTER APPARATUS ____ FILTERS ____

TEMPERATURE MEASURE ____

INTERFACE PROBE ____ SERIAL NUMBER ____

PID/OVA ____ SERIAL NUMBER ____

FIELD CHEMISTRY CALIBRATIONS

FRACTIONS ____

NUMBER OF BOTTLES ____

SAMPLE DEPTH ____

FIELD NOTEBOOK ____

SAMPLE METHOD ____

DISCHARGE WATER CONTAINERIZED

YES ____ NO ____

C:\FORMS\GRH2ONEW.FRM /mjb /7-30-92

SAMPLE DATE/TIME 3/28/94 / 1145

PRC GROUND WATER SAMPLING DATA SHEET

PAGE 1 OF 1

WELL NUMBER ERM 10-02

DATE 3/25/94

PROJECT Pt. Molate

PROJECT No. 044-024 & IRQS FW

WELL LOCATION

SAMPLING DATE(S) 3/28/94 0825

SAMPLING PERSONNEL G. Kersten, B. Daniels

STATION ELEVATION _____ GND ___ TOC ___

STATIC WATER LEVEL (from TOC) 15.12

WELL STICK UP

STATIC ELEVATION

WELL DEPTH 19.11 MEAS ✓ RPTD

FEET OF WATER 3.99

GALLONS/FOOT .652

CASING VOLUME 2.60 x 3 = 7.8

IMMISCIBLE PHASES PRESENT YES ___ NO

TYPE

MEASURED WITH

PID READINGS (backgrnd)

PID READINGS (TOC)

WELL INSTALLED BY

INSTALLATION DATE

DEVELOPMENT DATE(S)

FIELD CHEMISTRY CALIBRATIONS Horiba auto calibrated

DATE/TIME 3/25/94 0745

SPEC. CONDUCTANCE: STANDARD _____ UMHOS/CM AT 25C READING _____ UMHOS/CM AT ___

pH: pH 4.00 = _____ AT _____ C pH 7.00 = _____ AT _____ C pH 10.00 = _____ AT _____ C SLOPE _____

DISSOLVED OXYGEN: D.O. METER _____ MG/L AT ___ C PID: CALIBRATION GAS _____ PPM _____ SPAN ___ READING ___

	TIME	DISCHARGE RATE (GPM)	DISSOLVED OXYGEN (MG/L)	pH	Eh (ORP)	TEMP (C)	SPECIFIC CONDUCT (UMHOS/CM AT C) MG/CM	TURBID. (NTU)	CUMULATIVE VOL. OF WATER REMOVED (PURGED) GALLONS	CASING VOLS	PID/OVA READING LOCATION	VALUE	COMMENTS
PUMPED	1123	12 Positive Bailer	1.80	6.94	—	16.3	1.06	182	2.6	1			No odors, cloudy tan color,
PUMPED	1131	"	3.72	7.95	—	16.3	1.07	377	3.5	1.35		.	well purged dry approx 5 inches of water in well
PUMPED	3/28/94	H2O level	is	15.14'	BTOC			Full recharge.					
BAILED													
BAILED													

Purged w/ 1L disposable bailer dedicated to well stored in well begin 3/25/94

PUMPED PARAMETERS STABLE (Y/N) ___ PUMPED=BAILED PARAMETERS (Y/N) ___ CONDITION OF WELL:

REMARKS

FIELD EQUIPMENT

pH METER _____ SERIAL NUMBER _____

SPEC. COND. METER _____ SERIAL NUMBER _____

PUMP _____ SERIAL NUMBER _____

BAILER _____ SIZE _____

WATER LEVEL METER _____ SERIAL NUMBER _____

D. O. METER _____ SERIAL NUMBER _____

FILTER APPARATUS _____ FILTERS _____

TEMPERATURE MEASURE

INTERFACE PROBE _____ SERIAL NUMBER _____

PID/OVA _____ SERIAL NUMBER _____

FIELD CHEMISTRY CALIBRATIONS

FRACTIONS

NUMBER OF BOTTLES

SAMPLE DEPTH

FIELD NOTEBOOK

SAMPLE METHOD

DISCHARGE WATER CONTAINERIZED

YES _____ NO _____

C:\FORMS\GRH2ONEW.FRM kmb /7-30-92

Sample DATE/TIME 3/28/94 0825

PRC GROUND WATER SAMPLING DATA SHEET

PAGE 1 OF 1

WELL NUMBER ERM02-02

DATE 3/30/94

PROJECT Ft. Moiate

PROJECT No. 044-0248

WELL LOCATION

SAMPLING DATE(S) 3/30/94 1120

SAMPLING PERSONNEL J. Gould, G. Kerstad

STATION ELEVATION ____ GND ____ TOC ____

STATIC WATER LEVEL(from TOC) 3.81

WELL STICK UP

STATIC ELEVATION

WELL DEPTH 14.45 MEAS ✓ RPTD ____

FEET OF WATER 10.64

GALLONS/FOOT .652

CASING VOLUME 6.9 x 3 = 20.81

IMMISCIBLE PHASES PRESENT YES ____ NO ____

TYPE Sheen

MEASURED WITH

PID READINGS (backgrnd)

PID READINGS (TOC)

WELL INSTALLED BY

INSTALLATION DATE

DEVELOPMENT DATE(S)

FIELD CHEMISTRY CALIBRATIONS Hach, Dec club cell

DATE/TIME 3/30/94 0730 SPEC. CONDUCTANCE: STANDARD ____ UMHOS/CM AT 25C READING ____ UMHOS/CM AT ____ C

pH: pH 4.00 = ____ AT ____ C pH 7.00 = ____ AT ____ C pH 10.00 = ____ AT ____ C SLOPE ____

DISSOLVED OXYGEN: D.O. METER ____ MG/L AT ____ C PID: CALIBRATION GAS ____ PPM ____ SPAN ____ READING ____

	TIME	DISCHARGE RATE (GPM)	DISSOLVED OXYGEN (MG/L)	pH	Eh (ORP)	TEMP (C)	SPECIFIC CONDUCT (~~UMHOS/CM~~ MS/cm AT C)	~~TURBID.~~ (NTU)	CUMULATIVE VOL. OF WATER REMOVED (PURGED) GALLONS	CASING VOLS	PID/OVA READING LOCATION	VALUE	COMMENTS
PUMPED	1051	12 Bailer	0.96	6.40	—	15.8	1.16	88	Initial	—			STRONG H.C. ODOR.
	1100	"	1.19	6.40	—	15.4	1.18	29	7	1			CLEAR
	1111	"	1.36	6.43	—	15.4	1.18	22	14	2			"
	1122	"	1.31	6.45	—	15.4	1.18	33	21	3			"
BAILED													

Purged/sampled w/ disp bailer

MS/MSD w/ DUP ~~MW02-99~~ GER

PUMPED PARAMETERS STABLE (Y/N) ____ PUMPED=BAILED PARAMETERS (Y/N) ____ CONDITION OF WELL: ____

REMARKS

FIELD EQUIPMENT

pH METER ____ SERIAL NUMBER ____

SPEC. COND. METER ____ SERIAL NUMBER ____

PUMP ____ SERIAL NUMBER ____

BAILER ____ SIZE ____

WATER LEVEL METER ____ SERIAL NUMBER ____

D. O. METER ____ SERIAL NUMBER ____

FILTER APPARATUS ____ FILTERS ____

TEMPERATURE MEASURE

INTERFACE PROBE ____ SERIAL NUMBER ____

PID/OVA ____ SERIAL NUMBER ____

FIELD CHEMISTRY CALIBRATIONS

FRACTIONS

NUMBER OF BOTTLES

SAMPLE DEPTH

FIELD NOTEBOOK

SAMPLE METHOD

DISCHARGE WATER CONTAINERIZED

YES ____ NO ____

C:\FORMS\GRH2ONEW.FRM /mjb /7-30-92

Sample DATE/Time 3/30/94 1120

PRC GROUND WATER SAMPLING DATA SHEET

PAGE 1 OF 1

WELL NUMBER MW02-04

DATE 3/30/94

PROJECT Ft. McIATE

PROJECT No. 0441-0248

WELL LOCATION

SAMPLING DATE(S) 3/30/94 1020

SAMPLING PERSONNEL J. GOULD, G. KERSTEN

STATION ELEVATION ____ GND ____ TOC ____

STATIC WATER LEVEL(from TOC) 26.62

WELL STICK UP

STATIC ELEVATION

WELL DEPTH 29.90 MEAS ✓ RPTD

FEET OF WATER 3.28

GALLONS/FOOT .652

CASING VOLUME 2.14 x 3 = 6.42

IMMISCIBLE PHASES PRESENT YES ____ NO ____

TYPE

MEASURED WITH

PID READINGS (backgrnd)

PID READINGS (TOC)

WELL INSTALLED BY

INSTALLATION DATE

DEVELOPMENT DATE(S)

FIELD CHEMISTRY CALIBRATIONS Horiba auto cal

DATE/TIME 3/30/94 0730

SPEC. CONDUCTANCE: STANDARD ____ UMHOS/CM AT 25C READING ____ UMHOS/CM AT ____ C

pH: pH 4.00 = ____ AT ____ C pH 7.00 = ____ AT ____ C pH 10.00 = ____ AT ____ C SLOPE ____

DISSOLVED OXYGEN: D.O. METER ____ MG/L AT ____ C PID: CALIBRATION GAS ____ PPM ____ SPAN ____ READING ____

PUMPED

TIME	DISCHARGE RATE (GPM)	DISSOLVED OXYGEN (MG/L)	pH	Eh (ORP)	TEMP (C)	SPECIFIC CONDUCT. ~~(UMHOS/CM)~~ MS/CM AT C	TURBID. (NTU)	CUMULATIVE VOL. OF WATER REMOVED (PURGED) GALLONS	CASING VOLS.	PID/OVA READING LOCATION	VALUE	COMMENTS
0952	Bailer	3.30	6.34	—	17.8	1.29	87	Initial	—			
0959	"	4.56	6.56	—	17.9	1.15	616	2	1			
1004	"	9.36	6.55	—	17.9	1.12	418	4	2			
1010	"	9.36	6.41	—	17.9	1.20	188	6.5	3			

BAILED

Purged & pumped w/ disp bailer

PUMPED PARAMETERS STABLE (Y/N) ____ PUMPED=BAILED PARAMETERS (Y/N) ____ CONDITION OF WELL: ____

REMARKS

FIELD EQUIPMENT

pH METER ____ SERIAL NUMBER ____

SPEC. COND. METER ____ SERIAL NUMBER ____

PUMP ____ SERIAL NUMBER ____

BAILER ____ SIZE ____

WATER LEVEL METER ____ SERIAL NUMBER ____

D. O. METER ____ SERIAL NUMBER ____

FILTER APPARATUS ____ FILTERS ____

TEMPERATURE MEASURE

INTERFACE PROBE ____ SERIAL NUMBER ____

PID/OVA ____ SERIAL NUMBER ____

FIELD CHEMISTRY CALIBRATIONS

FRACTIONS

NUMBER OF BOTTLES

SAMPLE DEPTH

FIELD NOTEBOOK

SAMPLE METHOD

DISCHARGE WATER CONTAINERIZED

YES ____ NO ____

C:\FORMS\GRH2ONEW.FRM mjb /7-30-92

Sample DATE/TIME 3/30/94 / 1020

GROUND WATER SAMPLING DATA SHEET

PAGE 1 OF 1

WELL NUMBER MW02-01

DATE 3/30/94

PROJECT Pt. Molate

PROJECT No. 044-0248IRO

WELL LOCATION

SAMPLING DATE(S) 3/30/94 0930

SAMPLING PERSONNEL J. Gould / G. Kersten

STATION ELEVATION ____ GND ____ TOC ____

STATIC WATER LEVEL(from TOC) 21.95

WELL STICK UP

STATIC ELEVATION

WELL DEPTH 24.90 MEAS ✓ RPTD ____

FEET OF WATER 2.97

GALLONS/FOOT .652

CASING VOLUME 1.94 x 3 = 5.82

IMMISCIBLE PHASES PRESENT YES ____ NO ✓

TYPE

MEASURED WITH

PID READINGS (backgrnd)

PID READINGS (TOC)

WELL INSTALLED BY

INSTALLATION DATE

DEVELOPMENT DATE(S)

FIELD CHEMISTRY CALIBRATIONS Horiba autocal.

DATE/TIME 3/30/94 0730 SPEC. CONDUCTANCE: STANDARD ____ UMHOS/CM AT 25C READING ____ UMHOS/CM AT ____

pH: pH 4.00 = ____ AT ____ C pH 7.00 = ____ AT ____ C pH 10.00 = ____ AT ____ C SLOPE ____ C

DISSOLVED OXYGEN: D.O. METER ____ MG/L AT ____ C PID: CALIBRATION GAS ____ PPM ____ SPAN ____ READING ____

	TIME	DISCHARGE RATE (GPM)	DISSOLVED OXYGEN (MG/L)	pH	Eh (ORP)	TEMP (C)	SPECIFIC CONDUCT. (~~UMHOS/CM~~ mS/cm AT C)	TURBID. (NTU)	CUMULATIVE VOL. OF WATER REMOVED (PURGED) GALLONS	CASING VOLS	PID/OVA READING LOCATION	VALUE	COMMENTS
PUMPED	0900	1 gal/min	2.73	6.10	—	16.1	.465	278	INITIAL	—			
	0903	"	1.02	6.26	—	16.0	.468	758	2	1			
	0907	"	0.60	6.31	—	16.1	.466	811	4	2			
	0912	"	0.87	6.35	—	16.1	.464	802	6	3			
BAILED													

Purged/sampled 3/30 Bailer

PUMPED PARAMETERS STABLE (Y/N) ____ PUMPED=BAILED PARAMETERS (Y/N) ____ CONDITION OF WELL: ____

REMARKS

FIELD EQUIPMENT

pH METER ____ SERIAL NUMBER ____

SPEC. COND. METER ____ SERIAL NUMBER ____

PUMP ____ SERIAL NUMBER ____

BAILER ____ SIZE ____

WATER LEVEL METER ____ SERIAL NUMBER ____

D. O. METER ____ SERIAL NUMBER ____

FILTER APPARATUS ____ FILTERS ____

TEMPERATURE MEASURE

INTERFACE PROBE ____ SERIAL NUMBER ____

PID/OVA ____ SERIAL NUMBER ____

FIELD CHEMISTRY CALIBRATIONS

FRACTIONS

NUMBER OF BOTTLES

SAMPLE DEPTH

FIELD NOTEBOOK

SAMPLE METHOD

DISCHARGE WATER CONTAINERIZED

YES ____ NO ____

C:\FORMS\GRH2ONEW.FRM /mjb /7-30-92

SAMPLE DATE/TIME 3/30/94 / 0930

PRC GROUND WATER SAMPLING DATA SHEET

PAGE 1 OF 1

WELL NUMBER MW11-Ø2

DATE 3/22/94 finished Stopped 3/23/94

PROJECT Ft. Molate

PROJECT No. Ø44-Ø248IRQSFW

WELL LOCATION

SAMPLING DATE(S) 3/23 Ø915

SAMPLING PERSONNEL G. Kerston, B. Diangelos

STATION ELEVATION ____ GND ____ TOC ____

STATIC WATER LEVEL (from TOC) 18.21

WELL STICK UP —

STATIC ELEVATION 18.21 (GND)

WELL DEPTH 26.75 MEAS ✓ RPTD ____

FEET OF WATER 8.54

GALLONS/FOOT .652

CASING VOLUME 5.57 x 3 = 16.71

IMMISCIBLE PHASES PRESENT YES ____ NO ✓

TYPE 4" pvc

MEASURED WITH SOLINST

PID READINGS (backgrnd) Ø

PID READINGS (TOC) —

WELL INSTALLED BY

INSTALLATION DATE

DEVELOPMENT DATE(S)

FIELD CHEMISTRY CALIBRATIONS (HORIBA multi parameter calibrated w/IN NORMS.)

DATE/TIME 3/22/94 0730 1130

SPEC. CONDUCTANCE: STANDARD ____ UMHOS/CM AT 25C READING ____ UMHOS/CM AT ____ C

pH: pH 4.00 = ____ AT ____ C pH 7.00 = ____ AT ____ C pH 10.00 = ____ AT ____ C SLOPE ____

DISSOLVED OXYGEN: D.O. METER ____ MG/L AT ____ C PID: CALIBRATION GAS ____ PPM ____ SPAN ____ READING ____

	TIME	DISCHARGE RATE (GPM)	DISSOLVED OXYGEN (MG/L)	pH	Eh (ORP)	TEMP (C)	SPECIFIC CONDUCT. (UMHOS/CM AT C) mS/cm	TURBID. (NTU)	CUMULATIVE VOL. OF WATER REMOVED (PURGED) GALLONS	CASING VOLS	PID/OVA READING LOCATION	VALUE	COMMENTS
PUMPED	1235	2.5 GPM	1.Ø8	6.66	—	16.9	1.25	358	5	.95	—	—	NO ODOR SL. CLOUDY
	1237	2.5	2.64	6.38	—	16.5	1.1Ø	242	1Ø	1.9Ø	—	—	"
	1239	25	3.21	6.44	—	16.5	1.1Ø	246	12	2.2	—	—	WELL PURGED DRY AT 12 GALLONS
	3/23	H2O level.	Ø900			18.22	FULL RECHARGE						
BAILED													

2" Grundfos pump

PUMPED PARAMETERS STABLE (Y/N) ____ PUMPED=BAILED PARAMETERS (Y/N) ____ CONDITION OF WELL: ____

REMARKS

FIELD EQUIPMENT

pH METER ____ SERIAL NUMBER ____

SPEC. COND. METER ____ SERIAL NUMBER ____

PUMP ____ SERIAL NUMBER ____

BAILER ____ SIZE ____

WATER LEVEL METER ____ SERIAL NUMBER ____

D. O. METER ____ SERIAL NUMBER ____

FILTER APPARATUS ____ FILTERS ____

TEMPERATURE MEASURE ____

INTERFACE PROBE ____ SERIAL NUMBER ____

PID/OVA ____ SERIAL NUMBER ____

FIELD CHEMISTRY CALIBRATIONS

FRACTIONS ____

NUMBER OF BOTTLES ____

SAMPLE DEPTH ____

FIELD NOTEBOOK ____

SAMPLE METHOD ____

DISCHARGE WATER CONTAINERIZED

YES ____ NO ____

C:\FORMS\GRH2ONEW.FRM /mjb /7-30-92

MW 11-02 (26.0) collected @ 0930 w/ 2" Bailer

PRC GROUND WATER SAMPLING DATA SHEET

PAGE 1 OF 1

WELL NUMBER MW11-05

DATE 3/22/94

PROJECT _____ STATION ELEVATION _____ GND ___ TOC ___ IMMISCIBLE PHASES PRESENT YES ___ NO ✓

PROJECT No. _____ STATIC WATER LEVEL(from TOC) 16.42 TYPE _____

WELL LOCATION _____ WELL STICK UP _____ MEASURED WITH _____

SAMPLING DATE(S) 3/22/94 STATIC ELEVATION _____ PID READINGS (backgrnd) ∅

SAMPLING PERSONNEL B. DeAngelis, G. Kirkham WELL DEPTH 22.87 MEAS ___ RPTD ___ PID READINGS (TOC) _____

FEET OF WATER 6.45 WELL INSTALLED BY _____

GALLONS/FOOT 0.653 INSTALLATION DATE _____

CASING VOLUME 4.2 X 3 = 12.6 DEVELOPMENT DATE(S) _____

FIELD CHEMISTRY CALIBRATIONS Horiba Auto calibrated

DATE/TIME 3/22/94 0733 1130 SPEC. CONDUCTANCE: STANDARD _____ UMHOS/CM AT 25C READING _____ UMHOS/CM AT ___ C

pH: pH 4.00 = _____ AT _____ C pH 7.00 = _____ AT _____ C pH 10.00 = _____ AT _____ C SLOPE _____

DISSOLVED OXYGEN: D.O. METER _____ MG/L AT ___ C PID: CALIBRATION GAS _____ PPM _____ SPAN _____ READING _____

	TIME	DISCHARGE RATE (GPM)	DISSOLVED OXYGEN (MG/L)	pH	Eh (ORP)	TEMP (C)	SPECIFIC CONDUCT. (UMHOS/CM AT C) mS/cm	TURBID. (NTU)	CUMULATIVE VOL. OF WATER REMOVED (PURGED) GALLONS	CASING VOLS.	PID/OVA READING LOCATION	PID/OVA READING VALUE	COMMENTS
PUMPED	1311	2 GPM	2.74	5.83	—	15.6	1.48	84	4	1	—	—	
PUMPED	1313	"	1.25	5.62	—	16.3	.77	50	8	2	—	—	
PUMPED	1315	"	∅.8∅	5.66	—	16.1	.65	63	12.6	3	—	—	3 well volumes.
PUMPED													
PUMPED													
PUMPED													
PUMPED													
PUMPED													
PUMPED													
PUMPED													
BAILED													
BAILED													

2" Grundfos

PUMPED PARAMETERS STABLE (Y/N) ___ PUMPED=BAILED PARAMETERS (Y/N) ___ CONDITION OF WELL: _____

REMARKS _____

FIELD EQUIPMENT

pH METER _____ SERIAL NUMBER _____

SPEC. COND. METER _____ SERIAL NUMBER _____

PUMP _____ SERIAL NUMBER _____

BAILER _____ SIZE _____

WATER LEVEL METER _____ SERIAL NUMBER _____

D. O. METER _____ SERIAL NUMBER _____

FILTER APPARATUS _____ FILTERS _____

TEMPERATURE MEASURE _____

INTERFACE PROBE _____ SERIAL NUMBER _____

PID/OVA _____ SERIAL NUMBER _____

FIELD CHEMISTRY CALIBRATIONS

FRACTIONS _____

NUMBER OF BOTTLES _____

SAMPLE DEPTH _____

FIELD NOTEBOOK _____

SAMPLE METHOD _____

DISCHARGE WATER CONTAINERIZED

YES _____ NO _____

C:\FORMS\GRH2ONEW.FRM /mjb /7-30-92

MW11-05 (22.0) collected @ 1326 w/ Grundfos
VOAs collected w/ Bailer

PRC GROUND WATER SAMPLING DATA SHEET

PAGE ___ OF ___

WELL NUMBER MW 11-08

DATE 3/22/94

PROJECT PJ. Mobiles

PROJECT No. 044-0248 TROSFW

WELL LOCATION

SAMPLING DATE(S) 3/22/94

SAMPLING PERSONNEL G. KERSTON / B. DRANGETS

STATION ELEVATION ___ GND ___ TOC ___

STATIC WATER LEVEL (from TOC) 14.59

WELL STICK UP

STATIC ELEVATION

WELL DEPTH 22.86 MEAS ✓ RPTD

FEET OF WATER 8.27

GALLONS/FOOT .652

CASING VOLUME 5.39 x 3 = 16.17

IMMISCIBLE PHASES PRESENT YES ___ NO ✓

TYPE

MEASURED WITH

PID READINGS (backgrnd)

PID READINGS (TOC)

WELL INSTALLED BY

INSTALLATION DATE

DEVELOPMENT DATE(S)

FIELD CHEMISTRY CALIBRATIONS Hach Hydra Auto Calibrated

DATE/TIME 3/22/94 0730 (SA) 1130

SPEC. CONDUCTANCE: STANDARD ___ UMHOS/CM AT 25C READING ___ UMHOS/CM AT ___ C

pH: pH 4.00 = ___ AT ___ C pH 7.00 = ___ AT ___ C pH 10.00 = ___ AT ___ C SLOPE ___

DISSOLVED OXYGEN: D.O. METER ___ MG/L AT ___ C PID: CALIBRATION GAS ___ PPM ___ SPAN ___ READING ___

2" Geoprobe

	TIME	DISCHARGE RATE (GPM)	DISSOLVED OXYGEN (MG/L)	pH	Eh (ORP)	TEMP (C)	SPECIFIC CONDUCT. (UMHOS/CM AT C) (mS/cm)	TURBID. (NTU)	CUMULATIVE VOL. OF WATER REMOVED (PURGED) GALLONS	CASING VOLS	PID/OVA READING LOCATION	VALUE	COMMENTS
PUMPED	1405	2.5	0.67	6.83		16.3	.805	615	5.3	1			DARK WASTE HYDROCARBON ODOR
PUMPED	1407	2.5	0.53	6.79		15.8	.826	250	10.6	2			small blacks oil globules.
PUMPED	1409	2.5	0.90	6.74		15.7	.823	123	16.2	3			HYDROCARBON ODOR.
PUMPED													
PUMPED													
PUMPED													
PUMPED													
PUMPED													
PUMPED													
PUMPED													
BAILED													
BAILED													

PUMPED PARAMETERS STABLE (Y/N) ___ PUMPED=BAILED PARAMETERS (Y/N) ___ CONDITION OF WELL: ___

REMARKS

FIELD EQUIPMENT

pH METER ___ SERIAL NUMBER ___

SPEC. COND. METER ___ SERIAL NUMBER ___

PUMP ___ SERIAL NUMBER ___

BAILER ___ SIZE ___

WATER LEVEL METER ___ SERIAL NUMBER ___

D. O. METER ___ SERIAL NUMBER ___

FILTER APPARATUS ___ FILTERS ___

TEMPERATURE MEASURE ___

INTERFACE PROBE ___ SERIAL NUMBER ___

PID/OVA ___ SERIAL NUMBER ___

FIELD CHEMISTRY CALIBRATIONS

FRACTIONS ___

NUMBER OF BOTTLES ___

SAMPLE DEPTH ___

FIELD NOTEBOOK ___

SAMPLE METHOD ___

DISCHARGE WATER CONTAINERIZED

YES ___ NO ___

C:\FORMS\GRH2ONEW.FRM mjb 7-30-92

MW 11-08 (22.0) initiated @ 1412 w/Geoprobe, VOAs collected w/Bailer

PRC GROUND WATER SAMPLING DATA SHEET

PAGE 1 OF 1

WELL NUMBER MW II-13

DATE 3/25/94

PROJECT R. Nolte

PROJECT No. 244.0248TRQSFW

WELL LOCATION

SAMPLING DATE(S) 3/25/94 1530

SAMPLING PERSONNEL G. KORSTEN, B. DAMKULS

STATION ELEVATION ____ GND ____ TOC ____

STATIC WATER LEVEL (from TOC) 0.1 level 12.31, H2 level 12.34

WELL STICK UP

STATIC ELEVATION

WELL DEPTH 26.33 MEAS ____ RPTD ____

FEET OF WATER 13.99

GALLONS/FOOT .652

CASING VOLUME 9.12 x 3 = 27.36

IMMISCIBLE PHASES PRESENT YES ✓ NO ____

TYPE 0.43 feet of black oil

MEASURED WITH

PID READINGS (backgrnd)

PID READINGS (TOC)

WELL INSTALLED BY

INSTALLATION DATE

DEVELOPMENT DATE(S)

FIELD CHEMISTRY CALIBRATIONS Horiba autocalibrated

DATE/TIME 3/25/94 0745 SPEC. CONDUCTANCE: STANDARD ____ UMHOS/CM AT 25C READING ____ UMHOS/CM AT ____

pH: pH 4.00 = ____ AT ____ C pH 7.00 = ____ AT ____ C pH 10.00 = ____ AT ____ C SLOPE ____

DISSOLVED OXYGEN: D.O. METER ____ MG/L AT ____ C PID: CALIBRATION GAS ____ PPM ____ SPAN ____ READING ____

	TIME	DISCHARGE RATE (GPM)	DISSOLVED OXYGEN (MG/L)	pH	Eh (ORP)	TEMP (C)	SPECIFIC CONDUCT. (~~UMHOS/CM~~ mS/cm) AT C	TURBID. (NTU)	CUMULATIVE VOL. OF WATER REMOVED (PURGED) GALLONS	CASING VOLS.	PID/OVA READING LOCATION	VALUE	COMMENTS
PUMPED	1444	12 D.SP Bailer	2.67	6.50	—	18.1	3.94	10	9	1			Dark w/ TURB Mtr
PUMPED	1545	"	3.92	6.57	—	18.4	3.87	10	18	2			" Fairly clear water turbidity
PUMPED	1525	"	3.84	6.56	—	18.4	3.96	10	27	3			" out purge except for heavy oil in first few bailers.
PUMPED													only a sheen remained
PUMPED													after a while
BAILED													
BAILED													

Pumped w/ 3 gallons bailer

PUMPED PARAMETERS STABLE (Y/N) ____ PUMPED=BAILED PARAMETERS (Y/N) ____ CONDITION OF WELL: ____

REMARKS

FIELD EQUIPMENT

pH METER ____ SERIAL NUMBER ____

SPEC. COND. METER ____ SERIAL NUMBER ____

PUMP ____ SERIAL NUMBER ____

BAILER ____ SIZE ____

WATER LEVEL METER ____ SERIAL NUMBER ____

D. O. METER ____ SERIAL NUMBER ____

FILTER APPARATUS ____ FILTERS ____

TEMPERATURE MEASURE ____

INTERFACE PROBE ____ SERIAL NUMBER ____

PID/OVA ____ SERIAL NUMBER ____

FIELD CHEMISTRY CALIBRATIONS

FRACTIONS ____

NUMBER OF BOTTLES ____

SAMPLE DEPTH ____

FIELD NOTEBOOK ____

SAMPLE METHOD ____

DISCHARGE WATER CONTAINERIZED

YES ____ NO ____

C:\FORMS\GRH2ONEW.FRM /mjb /7-30-92

Sample DATE/TIME 3/25/94 1530

PRC GROUND WATER SAMPLING DATA SHEET

PAGE 1 OF 1

WELL NUMBER MW11-19

DATE 3/22/94

PROJECT Pt. Molate

PROJECT No. 044-0248IRQSFW

WELL LOCATION

SAMPLING DATE(S) 3/22/94

SAMPLING PERSONNEL B. DeAngelis, G. Kersten

STATION ELEVATION _____ GND ___ TOC ___

STATIC WATER LEVEL(from TOC) 16.35

WELL STICK UP

STATIC ELEVATION

WELL DEPTH 23.39 MEAS ✓ RPTD

FEET OF WATER 7.04X

GALLONS/FOOT 0.653

CASING VOLUME 4.6 x3= 13.8

IMMISCIBLE PHASES PRESENT YES ✓ NO ___ Oil Globules

TYPE

MEASURED WITH

PID READINGS (backgrnd)

PID READINGS (TOC)

WELL INSTALLED BY

INSTALLATION DATE

DEVELOPMENT DATE(S)

FIELD CHEMISTRY CALIBRATIONS Horiba Auto Calibrated 3/22/94 @ ~~0730~~ BUD 1130

DATE/TIME

SPEC. CONDUCTANCE: STANDARD ___ UMHOS/CM AT 25C READING ___ UMHOS/CM AT ___ C

pH: pH 4.00 = ___ AT ___ C pH 7.00 = ___ AT ___ C pH 10.00 = ___ AT ___ C SLOPE ___

DISSOLVED OXYGEN: D.O. METER ___ MG/L AT ___ C PID: CALIBRATION GAS ___ PPM ___ SPAN ___ READING ___

	TIME	DISCHARGE RATE (GPM)	DISSOLVED OXYGEN (MG/L)	pH	Eh (ORP)	TEMP (C)	SPECIFIC CONDUCT. ~~(UMHOS/CM AT C)~~ mS/cm	TURBID. (NTU)	CUMULATIVE VOL. OF WATER REMOVED (PURGED) GALLONS	CASING VOLS	PID/OVA READING LOCATION	VALUE	COMMENTS
PUMPED	1545	2GPM	0.56	6.85	—	16.8	2.05	791	4.3	1			STRONG HYDROCARBON ODOR
	1547	"	0.72	6.85		16.8	2.27	420	8.7	2			SOLVENT UNDERTONES MINOR BLACK oil
	1550	"	0.46	6.89		16.8	2.22	324	13.8	3			GLOBULES.
BAILED													

2" Gravity

PUMPED PARAMETERS STABLE (Y/N) ___ PUMPED=BAILED PARAMETERS (Y/N) ___ CONDITION OF WELL: S/F

REMARKS

FIELD EQUIPMENT

pH METER ___ SERIAL NUMBER ___

SPEC. COND. METER ___ SERIAL NUMBER ___

PUMP ___ SERIAL NUMBER ___

BAILER ___ SIZE ___

WATER LEVEL METER ___ SERIAL NUMBER ___

D. O. METER ___ SERIAL NUMBER ___

FILTER APPARATUS ___ FILTERS ___

TEMPERATURE MEASURE ___

INTERFACE PROBE ___ SERIAL NUMBER ___

PID/OVA ___ SERIAL NUMBER ___

FIELD CHEMISTRY CALIBRATIONS

FRACTIONS

NUMBER OF BOTTLES

SAMPLE DEPTH

FIELD NOTEBOOK

SAMPLE METHOD

DISCHARGE WATER CONTAINERIZED

YES ___ NO ___

C:\FORMS\GRH2ONEW.FRM /mjb /7-30-92

~~MW19~~ MW11-19 collected @ 1600 w/ Groundfos (23.07) VOAs collected w/ bailer

PRC GROUND WATER SAMPLING DATA SHEET

PAGE 1 OF 1

WELL NUMBER MW11-21

DATE 3/29/94

PROJECT PT. NOLATE

PROJECT No. 044-0248 IRQSFW

WELL LOCATION

SAMPLING DATE(S) 3/29/94 1520

SAMPLING PERSONNEL G. KERSTEN
J. GOWID

STATION ELEVATION _____ GND ___ TOC ___

STATIC WATER LEVEL(from TOC) 16.03

WELL STICK UP

STATIC ELEVATION

WELL DEPTH 22.50 MEAS ___ RPTD ___

FEET OF WATER 6.47

GALLONS/FOOT .652

CASING VOLUME 4.21 x 3 = 12.65

IMMISCIBLE PHASES PRESENT YES ___ NO ___

TYPE

MEASURED WITH

PID READINGS (backgrnd)

PID READINGS (TOC)

WELL INSTALLED BY

INSTALLATION DATE

DEVELOPMENT DATE(S)

FIELD CHEMISTRY CALIBRATIONS Horiba quacal

DATE/TIME 3/29/94 0745

SPEC. CONDUCTANCE: STANDARD _____ UMHOS/CM AT 25C READING _____ UMHOS/CM AT ___ C

pH: pH 4.00 = _____ AT _____ C pH 7.00 = _____ AT _____ C pH 10.00 = _____ AT _____ C SLOPE _____

DISSOLVED OXYGEN: D.O. METER _____ MG/L AT ___ C PID: CALIBRATION GAS _____ PPM _____ SPAN ___ READING ___

purged/sampled w/ disposable bailer

	TIME	DISCHARGE RATE (GPM)	DISSOLVED OXYGEN (MG/L)	pH	Eh (ORP)	TEMP (C)	SPECIFIC CONDUCT. (~~UMHOS/CM~~ MS/cm AT C)	TURBID. (NTU)	CUMULATIVE VOL. OF WATER REMOVED (PURGED) GALLONS	CASING VOLS.	PID/OVA READING LOCATION	VALUE	COMMENTS
PUMPED	1433	12 BAILER	2.36	6.56	—	17.4	.834	-10	1				CLEAR, SLIGHT HYDROCARBON ODOR
	1441	"	1.51	6.57	—	17.4	.850	257	4.2	1			SLIGHTY CLOUDY, ODOR
	1452	"	1.01	6.59	—	17.6	.920	249	8.4	2			
	1505	"	1.38	6.60	—	17.7	.851	238	12.6	3			
BAILED													

PUMPED PARAMETERS STABLE (Y/N) ___ PUMPED=BAILED PARAMETERS (Y/N) ___ CONDITION OF WELL:

REMARKS

FIELD EQUIPMENT

pH METER _____ SERIAL NUMBER _____

SPEC. COND. METER _____ SERIAL NUMBER _____

PUMP _____ SERIAL NUMBER _____

BAILER _____ SIZE _____

WATER LEVEL METER _____ SERIAL NUMBER _____

D. O. METER _____ SERIAL NUMBER _____

FILTER APPARATUS _____ FILTERS _____

TEMPERATURE MEASURE

INTERFACE PROBE _____ SERIAL NUMBER _____

PID/OVA _____ SERIAL NUMBER _____

FIELD CHEMISTRY CALIBRATIONS

FRACTIONS

NUMBER OF BOTTLES

SAMPLE DEPTH

FIELD NOTEBOOK

SAMPLE METHOD

DISCHARGE WATER CONTAINERIZED

YES _____ NO _____

C:\FORMS\GRH2ONEW.FRM /mjb /7-30-92

Sample DATE/TIME 3/29/94 1520

PRC

GROUND WATER SAMPLING DATA SHEET

PAGE 1 OF 1

9.21

WELL NUMBER MW11-40

DATE 3/31/94

PROJECT Pt. McIATE

PROJECT No. 0414-0248IRQSFW

WELL LOCATION

SAMPLING DATE(S) 3/31/94 0845

SAMPLING PERSONNEL J. LOWID, G. KERSTEN

STATION ELEVATION ____ GND ____ TOC ____

STATIC WATER LEVEL(from TOC) 9.21

WELL STICK UP

STATIC ELEVATION

WELL DEPTH 17.65 MEAS ✓ RPTD

FEET OF WATER 8.44

GALLONS/FOOT .65

CASING VOLUME 5.5 x 3 = 16.5

IMMISCIBLE PHASES PRESENT YES ✓ NO ____

~~PHASE~~ (< 0.01) 0.1

MEASURED WITH

PID READINGS (backgrnd)

PID READINGS (TOC)

WELL INSTALLED BY

INSTALLATION DATE

DEVELOPMENT DATE(S)

FIELD CHEMISTRY CALIBRATIONS Hach autocal

DATE/TIME 3/31/94 0730

SPEC. CONDUCTANCE: STANDARD ____ UMHOS/CM AT 25C READING ____ UMHOS/CM AT ____

pH: pH 4.00 = ____ AT ____ C pH 7.00 = ____ AT ____ C pH 10.00 = ____ AT ____ C SLOPE ____ C

DISSOLVED OXYGEN: D.O. METER ____ MG/L AT ____ C PID: CALIBRATION GAS ____ PPM ____ SPAN ____ READING ____

	TIME	DISCHARGE RATE (GPM)	DISSOLVED OXYGEN (MG/L)	pH	Eh (ORP)	TEMP (C)	SPECIFIC CONDUCT. (MS/CM) ~~(UMHOS/CM)~~ AT C	TURBID. (NTU)	CUMULATIVE VOL. OF WATER REMOVED (PURGED) GALLONS	CASING VOLS	PID/OVA READING LOCATION	VALUE	COMMENTS
PUMPED	0802	Bailer	7.28	5.67	—	15.4	.395	156	INITIAL	—			
	0812	"	5.13	6.20	—	15.3	.230	345	5.5	1			
	0820	"	5.76	6.24	—	15.3	.207	639	11	2			
	0830	"	5.53	6.12	—	15.3	.196	545	16.5	3			
BAILED													

PUMPED PARAMETERS STABLE (Y/N) ____ PUMPED=BAILED PARAMETERS (Y/N) ____ CONDITION OF WELL: ____

REMARKS

PUMPED/Sampled w/ POS PAGE BAILER

FIELD EQUIPMENT

pH METER ____ SERIAL NUMBER ____

SPEC. COND. METER ____ SERIAL NUMBER ____

PUMP ____ SERIAL NUMBER ____

BAILER ____ SIZE ____

WATER LEVEL METER ____ SERIAL NUMBER ____

D. O. METER ____ SERIAL NUMBER ____

FILTER APPARATUS ____ FILTERS ____

TEMPERATURE MEASURE ____

INTERFACE PROBE ____ SERIAL NUMBER ____

PID/OVA ____ SERIAL NUMBER ____

FIELD CHEMISTRY CALIBRATIONS

FRACTIONS

NUMBER OF BOTTLES

SAMPLE DEPTH

FIELD NOTEBOOK

SAMPLE METHOD

DISCHARGE WATER CONTAINERIZED

YES ____ NO ____

C:\FORMS\GRH2ONEW.FRM /mjb /7-30-92

SAMPLED 3/31/94 0845

PRC GROUND WATER SAMPLING DATA SHEET

PAGE 1 OF 1

WELL NUMBER MW11-54

DATE 3/29/94

PROJECT R. Nolate

PROJECT No. 044-0248 FEQSFW

WELL LOCATION

SAMPLING DATE(S) 3/29/94 0930

SAMPLING PERSONNEL

STATION ELEVATION ____ GND ____ TOC ____

STATIC WATER LEVEL(from TOC) 13.50 in

WELL STICK UP

STATIC ELEVATION

WELL DEPTH 23.97 MEAS ✓ RPTD ____

FEET OF WATER 10.47

GALLONS/FOOT .652

CASING VOLUME 6.83 x 3 = 20.48

IMMISCIBLE PHASES PRESENT YES ____ NO ✓

TYPE ~~Approx. 1 gal oil layer~~ PROPAGE MINOR oil present cuts in DRIP P.E.

MEASURED WITH

PID READINGS (backgrnd)

PID READINGS (TOC)

WELL INSTALLED BY

INSTALLATION DATE

DEVELOPMENT DATE(S)

FIELD CHEMISTRY CALIBRATIONS HORIBA autocal.

DATE/TIME 3/29/94 0745 SPEC. CONDUCTANCE: STANDARD ____ UMHOS/CM AT 25C READING ____ UMHOS/CM AT ____ C

pH: pH 4.00 = ____ AT ____ C pH 7.00 = ____ AT ____ C pH 10.00 = ____ AT ____ C SLOPE ____

DISSOLVED OXYGEN: D.O. METER ____ MG/L AT ____ C PID: CALIBRATION GAS ____ PPM ____ SPAN ____ READING ____

	TIME	DISCHARGE RATE (GPM)	DISSOLVED OXYGEN (MG/L)	pH	Eh (ORP)	TEMP (C)	SPECIFIC CONDUCT. ~~(UMHOS/CM)~~ mS/cm AT C)	TURBID. (NTU)	CUMULATIVE VOL. OF WATER REMOVED (PURGED) GALLONS	CASING VOLS	PID/OVA READING LOCATION	VALUE	COMMENTS
PUMPED	0818	(Bailer Drip)	0.42	6.76	—	17.5	4.42	999	2	0.3			STRONG HYDROCARBON ODOR, STREAM. CLOUDY
	0831	"	1.26	6.58	—	17.5	1.17	=10	7	1			clear, stream
	0849	"	1.35	6.36	—	17.5	1.15	=10	14	2			"
	0903	"	3.26	6.28	—	17.5	1.13	=10	21	3			"
BAILED													

Pumped samples w/ Disp. Bailer

PUMPED PARAMETERS STABLE (Y/N) ____ PUMPED=BAILED PARAMETERS (Y/N) ____ CONDITION OF WELL: ____

REMARKS

FIELD EQUIPMENT

pH METER ____ SERIAL NUMBER ____

SPEC. COND. METER ____ SERIAL NUMBER ____

PUMP ____ SERIAL NUMBER ____

BAILER ____ SIZE ____

WATER LEVEL METER ____ SERIAL NUMBER ____

D. O. METER ____ SERIAL NUMBER ____

FILTER APPARATUS ____ FILTERS ____

TEMPERATURE MEASURE

INTERFACE PROBE ____ SERIAL NUMBER ____

PID/OVA ____ SERIAL NUMBER ____

FIELD CHEMISTRY CALIBRATIONS

FRACTIONS

NUMBER OF BOTTLES

SAMPLE DEPTH

FIELD NOTEBOOK

SAMPLE METHOD

DISCHARGE WATER CONTAINERIZED

YES ✓ NO ____

C:\FORMS\GRH2ONEW.FRM /mjb /7-30-92

Sample DATE/TIME 3/29/94 0930

PRC GROUND WATER SAMPLING DATA SHEET

PAGE 1 OF 1

WELL NUMBER MW11-55

DATE 3/23/94

PROJECT Pt. Nozate

PROJECT No. 044 0248 IRCSFW

WELL LOCATION

SAMPLING DATE(S)

SAMPLING PERSONNEL B. D'Angelis, G. Kersten

STATION ELEVATION ____ GND ____ TOC ____

STATIC WATER LEVEL (from TOC) 11.45

WELL STICK UP

STATIC ELEVATION

WELL DEPTH 23.63 MEAS ✓ RPTD ____

FEET OF WATER 11.68

GALLONS/FOOT .652

CASING VOLUME 7.61 x 3 = 22.85

IMMISCIBLE PHASES PRESENT YES ____ NO ✓

TYPE 4" PVC

MEASURED WITH

PID READINGS (backgrnd)

PID READINGS (TOC)

WELL INSTALLED BY

INSTALLATION DATE

DEVELOPMENT DATE(S)

FIELD CHEMISTRY CALIBRATIONS Horiba Auto calibrated 3/23/94 @ 0730

DATE/TIME

SPEC. CONDUCTANCE: STANDARD ____ UMHOS/CM AT 25C READING ____ UMHOS/CM AT ____ C

pH: pH 4.00 = ____ AT ____ C pH 7.00 = ____ AT ____ C pH 10.00 = ____ AT ____ C SLOPE ____

DISSOLVED OXYGEN: D.O. METER ____ MG/L AT ____ C PID: CALIBRATION GAS ____ PPM ____ SPAN ____ READING ____

	TIME	DISCHARGE RATE (GPM)	DISSOLVED OXYGEN (MG/L)	pH	Eh (ORP)	TEMP (C)	SPECIFIC CONDUCT. (~~UMHOS/CM~~ mS/cm AT C)	TURBID. (NTU)	CUMULATIVE VOL. OF WATER REMOVED (PURGED) GALLONS	CASING VOLS.	PID/OVA READING LOCATION	VALUE	COMMENTS
PUMPED	1020	12.3-16	1.99	7.36	—	15.4	2.87	232	5	.65	-		HYDROCARBON ODOR
	1045 1054	"	1.66	7.28	—	15.9	3.16	148	10	1.3	-		
	1054	"	1.82	7.28	—	15.9	2.23	461	15	1.95	-		
	1102	"	2.72	7.26	—	15.8	2.18	633	20	2.6	-		
	1109	"	2.02	7.29	—	15.8	2.21	652	23	3.0	-		3 volumes. well purge complete
BAILED													

Failed w/ 24 hrs pressure drawdown (GER)

PUMPED PARAMETERS STABLE (Y/N) ____ PUMPED=BAILED PARAMETERS (Y/N) ____ CONDITION OF WELL:

REMARKS

FIELD EQUIPMENT

pH METER ____ SERIAL NUMBER ____

SPEC. COND. METER ____ SERIAL NUMBER ____

PUMP ____ SERIAL NUMBER ____

BAILER ____ SIZE ____

WATER LEVEL METER ____ SERIAL NUMBER ____

D. O. METER ____ SERIAL NUMBER ____

FILTER APPARATUS ____ FILTERS ____

TEMPERATURE MEASURE

INTERFACE PROBE ____ SERIAL NUMBER ____

PID/OVA ____ SERIAL NUMBER ____

FIELD CHEMISTRY CALIBRATIONS

FRACTIONS

NUMBER OF BOTTLES

SAMPLE DEPTH

FIELD NOTEBOOK

SAMPLE METHOD

DISCHARGE WATER CONTAINERIZED

YES ____ NO ____

C:\FORMS\GRH2ONEW.FRM mjb 7-30-92

MW 11-55 (23.0) collected @ 1130 w/ 1 Bailer dedicated teflon

PRC GROUND WATER SAMPLING DATA SHEET

PAGE 1 OF 1

WELL NUMBER MW11-56

DATE 3/30/94

PROJECT PT. MOLATE

PROJECT No. Φ44-Φ248 DRQS FW

WELL LOCATION

SAMPLING DATE(S) 3/30/94 1740

SAMPLING PERSONNEL J. GOULD, G. KERSTEN

STATION ELEVATION ____ GND ____ TOC ____

STATIC WATER LEVEL(from TOC) 10.82

WELL STICK UP

STATIC ELEVATION

WELL DEPTH 22.40 MEAS ____ RPTD ____

FEET OF WATER 11.58

GALLONS/FOOT .652

CASING VOLUME 7.5 x 3 = 22.5

IMMISCIBLE PHASES PRESENT YES ____ NO ____

TYPE

MEASURED WITH

PID READINGS (backgrnd)

PID READINGS (TOC)

WELL INSTALLED BY

INSTALLATION DATE

DEVELOPMENT DATE(S)

FIELD CHEMISTRY CALIBRATIONS Hor. by autocal

DATE/TIME 3/30/94 0730 SPEC. CONDUCTANCE: STANDARD ____ UMHOS/CM AT 25C READING ____ UMHOS/CM AT ____ C

pH: pH 4.00 = ____ AT ____ C pH 7.00 = ____ AT ____ C pH 10.00 = ____ AT ____ C SLOPE ____

DISSOLVED OXYGEN: D.O. METER ____ MG/L AT ____ C PID: CALIBRATION GAS ____ PPM ____ SPAN ____ READING ____

	TIME	DISCHARGE RATE (GPM)	DISSOLVED OXYGEN (MG/L)	pH	Eh (ORP)	TEMP (C)	SPECIFIC CONDUCT. (UMHOS/CM AT C)	TURBID. (NTU)	CUMULATIVE VOL. OF WATER REMOVED (PURGED) GALLONS	CASING VOLS.	PID/OVA READING LOCATION	PID/OVA READING VALUE	COMMENTS
PUMPED	1700	bailed	10.12	6.71	—	15.1	12.5	179	7.5	0			HC odor, clear
	1713		1.51	6.94	—	15.5	16.7	886	7.5	1			"
	1725		1.53	7.05	—	15.4	17.3	669	15	2			
	1735		1.51	7.10		15.3	17.4	600					
		Sampled	at	1740									
BAILED													

PUMPED PARAMETERS STABLE (Y/N) ____ PUMPED=BAILED PARAMETERS (Y/N) ____ CONDITION OF WELL: Good

REMARKS

FIELD EQUIPMENT

pH METER ____ SERIAL NUMBER ____

SPEC. COND. METER ____ SERIAL NUMBER ____

PUMP ____ SERIAL NUMBER ____

BAILER ____ SIZE ____

WATER LEVEL METER ____ SERIAL NUMBER ____

D. O. METER ____ SERIAL NUMBER ____

FILTER APPARATUS ____ FILTERS ____

TEMPERATURE MEASURE

INTERFACE PROBE ____ SERIAL NUMBER ____

PID/OVA ____ SERIAL NUMBER ____

FIELD CHEMISTRY CALIBRATIONS

FRACTIONS

NUMBER OF BOTTLES

SAMPLE DEPTH

FIELD NOTEBOOK

SAMPLE METHOD

DISCHARGE WATER CONTAINERIZED

YES ____ NO ____

C:\FORMS\GRH2ONEW.FRM lmb 7-30-92

Sampled 3/30/94 1740

PRC GROUND WATER SAMPLING DATA SHEET

PAGE 1 OF ___

WELL NUMBER MW11-57

DATE 3/28/94

PROJECT Pt. Molate

PROJECT No. 044-0248IRQSFW

WELL LOCATION ___

SAMPLING DATE(S) 3/28/94 1445

SAMPLING PERSONNEL G. Kersten, S. Gould

STATION ELEVATION ___ GND ___ TOC ___

STATIC WATER LEVEL(from TOC) 13.52

WELL STICK UP ___

STATIC ELEVATION ___

WELL DEPTH 23.03 MEAS ✓ RPTD ___

FEET OF WATER 9.57

GALLONS/FOOT .652

CASING VOLUME 6.2 x 3 = 18.60

IMMISCIBLE PHASES PRESENT YES ___ NO ✓

TYPE ___

MEASURED WITH ___

PID READINGS (backgrnd) ___

PID READINGS (TOC) ___

WELL INSTALLED BY ___

INSTALLATION DATE ___

DEVELOPMENT DATE(S) ___

FIELD CHEMISTRY CALIBRATIONS Horiba auto calibrated

DATE/TIME 3/28/94 0736 SPEC. CONDUCTANCE: STANDARD ___ UMHOS/CM AT 25C READING ___ UMHOS/CM AT ___ C

pH: pH 4.00 = ___ AT ___ C pH 7.00 = ___ AT ___ C pH 10.00 = ___ AT ___ C SLOPE ___

DISSOLVED OXYGEN: D.O. METER ___ MG/L AT ___ C PID: CALIBRATION GAS ___ PPM ___ SPAN ___ READING ___

	TIME	DISCHARGE RATE (GPM)	DISSOLVED OXYGEN (MG/L)	pH	Eh (ORP)	TEMP (C)	SPECIFIC CONDUCT. ~~(UMHOS/CM AT C)~~ mS/cm	TURBID. (NTU)	CUMULATIVE VOL. OF WATER REMOVED (PURGED) GALLONS	CASING VOLS.	PID/OVA READING LOCATION	VALUE	COMMENTS
PUMPED	1340	12 B.A.L. (DDD)	6.73	6.60	—	18.3	3.45	-10	1.5				Hydro carbon odor. Clear
	1356	"	0.58 ~~6.63~~	6.63		18.3	4.03	-999	6				Gray, cloudy
	1415	"		6.61		18.3	4.34	-999	12				HC odor, cloudy
	1440	"		6.61		18.3	4.60	-999	18				Same
		Sampled	at	1445			MS/MSD		Collected				
BAILED													

PUMPED PARAMETERS STABLE (Y/N) Y ~~PUMPED~~ BAILED PARAMETERS (Y/N) ___ CONDITION OF WELL: ___

REMARKS ___

pH/DO samples in disposable bottle

FIELD EQUIPMENT

pH METER ___ SERIAL NUMBER ___

SPEC. COND. METER ___ SERIAL NUMBER ___

PUMP ___ SERIAL NUMBER ___

BAILER ___ SIZE ___

WATER LEVEL METER ___ SERIAL NUMBER ___

D. O. METER ___ SERIAL NUMBER ___

FILTER APPARATUS ___ FILTERS ___

TEMPERATURE MEASURE ___

INTERFACE PROBE ___ SERIAL NUMBER ___

PID/OVA ___ SERIAL NUMBER ___

FIELD CHEMISTRY CALIBRATIONS

FRACTIONS ___

NUMBER OF BOTTLES ___

SAMPLE DEPTH ___

FIELD NOTEBOOK ___

SAMPLE METHOD ___

DISCHARGE WATER CONTAINERIZED

YES ___ NO ___

C:\FORMS\GRH2ONEW.FRM /mjb /7-30-92

SAMPLE DATE/TIME 3/28/94 / 1445

PRC GROUND WATER SAMPLING DATA SHEET

PAGE 1 OF 1

WELL NUMBER MW11-92

DATE 3/29/92

PROJECT Pt. Molate

PROJECT No. 0441-0248IRQSFW

WELL LOCATION

SAMPLING DATE(S) 3/29/94 1645

SAMPLING PERSONNEL G Hirsten, J Gould

STATION ELEVATION ____ GND ____ TOC ____

STATIC WATER LEVEL(from TOC) 12.50

WELL STICK UP

STATIC ELEVATION

WELL DEPTH 19.10 MEAS ____ RPTD ____

FEET OF WATER 6.6

GALLONS/FOOT .652

CASING VOLUME 4.3 x 3 = 12.9

IMMISCIBLE PHASES PRESENT ~~YES~~ ____ NO ____

TYPE 0.20 feet of oil

MEASURED WITH

PID READINGS (backgrnd)

PID READINGS (TOC)

WELL INSTALLED BY

INSTALLATION DATE

DEVELOPMENT DATE(S)

FIELD CHEMISTRY CALIBRATIONS Horiba autocal

DATE/TIME 3/29/94 0745

SPEC. CONDUCTANCE: STANDARD ____ UMHOS/CM AT 25C READING ____ UMHOS/CM AT ____ C

pH: pH 4.00 = ____ AT ____ C pH 7.00 = ____ AT ____ C pH 10.00 = ____ AT ____ C SLOPE ____

DISSOLVED OXYGEN: D.O. METER ____ MG/L AT ____ C PID: CALIBRATION GAS ____ PPM ____ SPAN ____ READING ____

PUMPED / BAILED

TIME	DISCHARGE RATE (GPM)	DISSOLVED OXYGEN (MG/L)	pH	Eh (ORP)	TEMP (C)	SPECIFIC CONDUCT. ~~(UMHOS/CM AT C)~~ MS/cm	TURBID. (NTU)	CUMULATIVE VOL. OF WATER REMOVED (PURGED) GALLONS	CASING VOLS	PID/OVA READING LOCATION	VALUE	COMMENTS
1621	1.2 Bailer	0.72	6.56	—	17.3	1.04	999	1	—			
1627	"	0.88	6.53	—	17.4	1.06	386	4.5	1			
1638	"	1.48	6.54	—	17.4	1.08	10	9	2			
1645	"	1.31	6.60	—	17.4	1.13	10	13	3			

(PURGED/SAMPLED w/ DISPOSABLE BAILER.)

PUMPED PARAMETERS STABLE (Y/N) ____ PUMPED=BAILED PARAMETERS (Y/N) ____ CONDITION OF WELL: ____

REMARKS

FIELD EQUIPMENT

pH METER ____ SERIAL NUMBER ____

SPEC. COND. METER ____ SERIAL NUMBER ____

PUMP ____ SERIAL NUMBER ____

BAILER ____ SIZE ____

WATER LEVEL METER ____ SERIAL NUMBER ____

D. O. METER ____ SERIAL NUMBER ____

FILTER APPARATUS ____ FILTERS ____

TEMPERATURE MEASURE

INTERFACE PROBE ____ SERIAL NUMBER ____

PID/OVA ____ SERIAL NUMBER ____

FIELD CHEMISTRY CALIBRATIONS

FRACTIONS

NUMBER OF BOTTLES

SAMPLE DEPTH

FIELD NOTEBOOK

SAMPLE METHOD

DISCHARGE WATER CONTAINERIZED

YES ____ NO ____

C:\FORMS\GRH2ONEW.FRM mjb /7-30-92

Sample Date/Time 3/29/94/1645

6

PRC GROUND WATER SAMPLING DATA SHEET

PAGE 1 OF 1

WELL NUMBER MW11-93

DATE 3/30/94

PROJECT Pt. Molate

PROJECT No. 044-0248 I.05FW

WELL LOCATION

SAMPLING DATE(S) 3/30/94 1645

SAMPLING PERSONNEL J. Gould, G. Kierstein

STATION ELEVATION ____ GND ____ TOC ____

STATIC WATER LEVEL(from TOC) 12.96

WELL STICK UP

STATIC ELEVATION

WELL DEPTH 22.35 MEAS ✓ RPTD

FEET OF WATER 9.39

GALLONS/FOOT .652

CASING VOLUME 6.1 x 3 = 18.3

IMMISCIBLE PHASES PRESENT YES ✓ NO

TYPE Very thin in drop pipe .79 feet outside pipe

MEASURED WITH

PID READINGS (background)

PID READINGS (TOC)

WELL INSTALLED BY

INSTALLATION DATE

DEVELOPMENT DATE(S)

FIELD CHEMISTRY CALIBRATIONS HOR. bar auto cal

DATE/TIME 3/30/94 0730 SPEC. CONDUCTANCE: STANDARD ____ UMHOS/CM AT 25C READING ____ UMHOS/CM AT ____ C

pH: pH 4.00 = ____ AT ____ C pH 7.00 = ____ AT ____ C pH 10.00 = ____ AT ____ C SLOPE ____

DISSOLVED OXYGEN: D.O. METER ____ MG/L AT ____ C PID: CALIBRATION GAS ____ PPM ____ SPAN ____ READING ____

	TIME	DISCHARGE RATE (GPM)	DISSOLVED OXYGEN (MG/L)	pH	Eh (ORP)	TEMP (C)	SPECIFIC CONDUCT. ~~(UMHOS/CM AT C)~~ ms/m	TURBID. (NTU)	CUMULATIVE VOL. OF WATER REMOVED (PURGED) GALLONS	CASING VOLS.	PID/OVA READING LOCATION	VALUE	COMMENTS
PUMPED	1555	12 Bailer	0.98	6.92	—	17.9	4.15	32	Initial	—			Sheen H.C. odor
	1602	"	1.91	7.43	—	17.7	2.06	11	6	1			clear.
	1619	"	1.27	6.78	—	17.9	1.54	5	12	2			
	1632	"	2.83	6.70	—	12.9	1.34	5	18.3	3			
BAILED													

Purged/sampled w/ disposable bailer

PUMPED PARAMETERS STABLE (Y/N) ____ PUMPED=BAILED PARAMETERS (Y/N) ____ CONDITION OF WELL: ____

REMARKS

FIELD EQUIPMENT

pH METER ____ SERIAL NUMBER ____

SPEC. COND. METER ____ SERIAL NUMBER ____

PUMP ____ SERIAL NUMBER ____

BAILER ____ SIZE ____

WATER LEVEL METER ____ SERIAL NUMBER ____

D. O. METER ____ SERIAL NUMBER ____

FILTER APPARATUS ____ FILTERS ____

TEMPERATURE MEASURE

INTERFACE PROBE ____ SERIAL NUMBER ____

PID/OVA ____ SERIAL NUMBER ____

FIELD CHEMISTRY CALIBRATIONS

FRACTIONS

NUMBER OF BOTTLES

SAMPLE DEPTH

FIELD NOTEBOOK

SAMPLE METHOD

DISCHARGE WATER CONTAINERIZED

YES ____ NO ____

C:\FORMS\GRH2ONEW.FRM mjb 7-30-92

Sample DATE/TIME 3/30/94 1645

PLATES

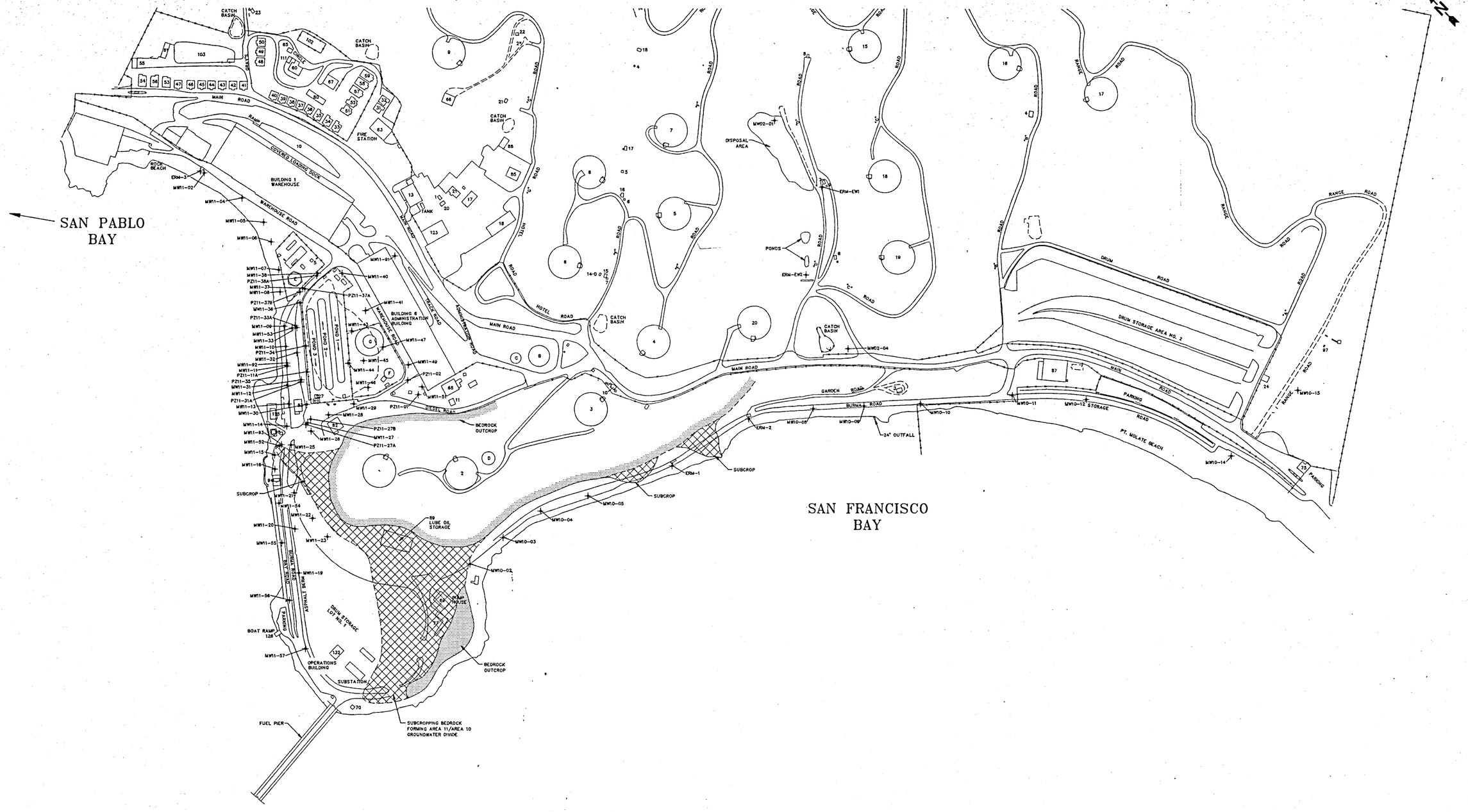

LEGEND

- + MONITORING WELL OR PIEZOMETER LOCATION
- BEDROCK OUTCROP
- SUBCROPPING BEDROCK GROUNDWATER DIVIDE

100' 0 100' 200'
SCALE: IN FEET

PLATE 1
NAVAL FUEL DEPOT POINT MOLATE
MARCH 1994 QUARTERLY REPORT
MONITORING WELL AND PIEZOMETER LOCATION MAP

DATE: 06/22/94 JLH DN FILE NAME: D:\PM\PM-BASE2.DWG

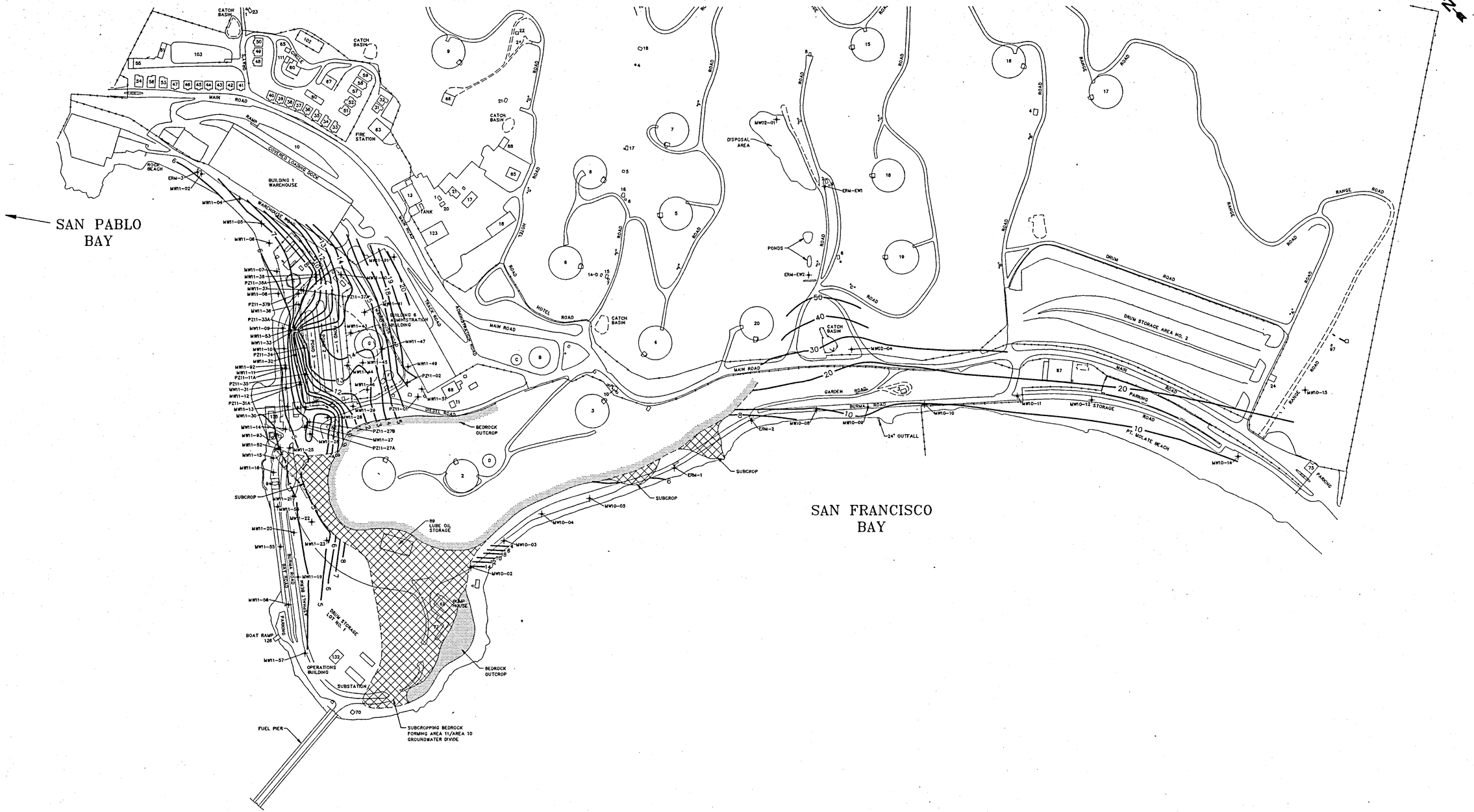

PLATE 2
NAVAL FUEL DEPOT POINT MOLATE
MARCH 1994 QUARTERLY REPORT
WATER LEVEL CONTOUR MAP
WATER LEVELS MEASURED MAY, 2,3 1994

DATE: 06/23/94 JLH DN FILE NAME: D:\PM\PM-BASE2.DWG