5090
Ser 1842.2/5162
16 Aug 1995

California Regional Water Quality Control Board
San Francisco Bay Region
Attn: Ms. Gina Kathuria
2101 Webster Street, Suite 500
Oakland, California 94612

Subj: INSTALLATION RESTORATION PROGRAM (IRP), NAVAL FUEL DEPOT, POINT MOLATE (NFDPM), CA - NPDES PERMIT DATA

Ref: (a) NPDES Permit Meeting of June 12, 1995

Dear Ms. Kathuria:

Enclosure (1) is forwarded in response to the RWQCB's request (at Ref (a) meeting) for information in regards to the groundwater treatment plant. The predicted groundwater influent flow and chemistry are listed and the outfall dilution factor has been calculated. I hope that the data supplied will assist you in developing the NPDES discharge limits. We can discuss any comments or questions at the next RPM meeting. If you have any questions in the mean time, call me at (415) 244-2552.

Sincerely,

Original signed by:
DEAN SAKAKIHARA
Remedial Project Manager

Encl:
(1) PRC ltr dtd August 14, 1995; NFD Point Molate, NPDES Permit Information

Copy to (w/encl):
California Department of Toxic Substances Control (Attn: Randy Adams)
Naval Fuel Depot Point Molate (Attn: Ron Nelson)
Fleet Industrial Supply Center, Oakland (Attn: R. Hegarty, Code 714)
Public Works Center, San Francisco Bay (Attn: Pablo Go)
PRC Environmental Management, Inc. (Attn: Jeff Reichmuth) (w/o encl)

nfdpm-11/

Ser 1842.2/5162
16 Aug 1995

Subj: INSTALLATION RESTORATION PROGRAM (IRP), NAVAL FUEL DEPOT, POINT MOLATE (NFDPM), CA - NPDES PERMIT DATA

Blind copy (w/o encl) to:
184, 1842, 1842.2
60C M. Bonino (w/ encl)
Admin Record (3 copies)
Chron, pink, green
File: NFD Point Molate

PRC Environmental Management, Inc.
1099 18th Street
Suite 1960
Denver, CO 80202
303-295-1101
Fax 303-295-2818

PRC

August 14, 1995

Mr. Dean Sakakihara
Department of the Navy
Engineering Field Activity West
Naval Facilities Engineering Command
900 Commodore Drive, Building 208
San Bruno, California 94066-2402

CLEAN Contract Number N62474-88-D-5086
Contract Task Order (CTO) 0248

Subject: Naval Fuel Depot (NFD) Point Molate Equipment National Pollutant Discharge Elimination System (NPDES) Permit Information

Dear Mr. Sakakihara:

This letter contains information requested by the California Regional Water Quality Control Board (RWQCB) during our meeting on June 12, 1995 regarding NPDES permit concerns. As discussed during this meeting, RWQCB will modify the existing wastewater treatment plant (WWTP) NPDES permit to include discharge of treated groundwater. Groundwater will be treated in the WWTP until a new groundwater treatment plant is constructed. Table 1 presents a schedule of wastewater and groundwater treatment activities.

Information requested by RWQCB included an estimation of the flow rate and chemical concentrations for the influent to the WWTP and the new groundwater treatment plant, and treatment plant outfall construction details and dilution estimates. The following paragraphs address each of these topics.

Influent Flowrate Estimate

The WWTP currently treats wastewater collected in the oil recovery system (ORS) and other minor wastewater streams, including facility sewage treatment plant (STP) effluent.

As shown in Table 1, the WWTP will receive both wastewater from the ORS and STP and groundwater from the extraction trench for approximately 6 months (between August 1995 and January 1996). After that period, only groundwater will be treated. Wastewater flowrates to the WWTP are largely dependent on precipitation, since surface runoff collected in valve boxes and tank french drains is transported through the ORS to the WWTP. Thus, wastewater flowrates may vary between less than 10 gallons per minute (gpm) and greater than 400 gpm, based on WWTP discharge records.

contains recycled fiber and is recyclable

Groundwater modeling conducted as part of the extraction trench design indicates that the maximum groundwater flowrate from the extraction trench will be approximately 200 gpm. The normal flowrate from the extraction trench will likely be much lower; possibly less than 50 gpm. In addition to treating groundwater collected in the extraction trench, the Navy plans to treat groundwater extracted as part of additional future removal and remedial actions in the groundwater treatment plant. Also, the groundwater treatment plant will be used to treat investigation derived liquid wastes (such as monitoring well purge water) and runoff collected on the soil bioremediation pad.

PRC anticipates that the total normal flowrate of contaminated water to the groundwater treatment plant will be between 100 and 150 gpm. As currently conceptualized, the groundwater treatment plant will be designed to treat a maximum flow rate of 200 gpm. If actual extraction trench groundwater flow rates are higher than expected, the groundwater treatment plant design basis will be changed accordingly. In addition, the design will incorporate a piping network that will allow diverting flow to existing tanks for temporary storage if the groundwater treatment plant hydraulic capacity is temporarily exceeded.

Influent Chemistry

Wastewater currently treated in the WWTP varies greatly in chemical composition, and is dependent on precipitation rates. Reliable data are not available documenting ORS and STP wastewater chemical concentrations.

Expected maximum groundwater treatment plant influent metals and organic compounds concentrations are given in Tables 2 and 3. PRC believes that concentrations contained in these tables will be representative of the maximum concentrations encountered under all groundwater treatment plant influent scenarios.

Outfall Construction

The new groundwater treatment plant will discharge effluent to San Francisco Bay using the existing WWTP outfall. Facility construction drawings indicate that this outfall extends approximately 2,500 feet into the bay, and is 8.5 feet deep (below mean lower low-water-level). The outfall diffuser is a 5-inch diameter steel pipe with a 3/8-inch thick neoprene rubber flap. A figure showing the construction of the diffuser that was copied from facility construction drawings is presented in Attachment A.

PRC calculated dilution values for groundwater treatment plant effluent using the Environmental Protection Agency (EPA) *PLUMES* model, and outfall construction data and expected plant operating parameters. Attachment B presents input parameters and the results of this calculation. The dilution calculation indicates that a 31.28-to-1 dilution will be attained at distance of 3.5 meters from the outfall (this distance is prescribed by the model).

PRC hopes that the information provided in this letter will be useful in developing NPDES discharge limits. To expedite the design of the groundwater treatment plant, PRC requests that RWQCB provide comments on this letter and design discharge limits by September 11, 1995.

Please call me at (303) 295-1101 if you have questions or comments regarding this matter.

Sincerely,

Jeffrey Reichmuth
Project Manager

JR/rkr

cc: Rodger Hosier, PRC
Steve Tsadwa, PRC
Ron Nelson, NFDPM

TABLE 1

NFD POINT MOLATE
WASTEWATER AND GROUNDWATER TREATMENT SCHEDULE

Activity	Approximate Date
Begin groundwater extraction from trench	August 1995
Groundwater treatment in the WWTP	August 1995
Decommission ORS and STP	January 1996
Begin groundwater treatment plant construction	May 1996
Groundwater treatment plant startup; begin decommissioning WWTP	August 1996

TABLE 2

NFD POINT MOLATE
GROUNDWATER TREATMENT PLANT
ESTIMATED MAXIMUM INFLUENT ORGANIC COMPOUNDS CONCENTRATIONS

Constituent	Concentration (μg/L)
Benzene	7
Toluene	4
Ethylbenzene	2
Xylenes	11
Total Petroleum Hydrocarbons (TPH) - Bunker	20,300
TPH - Motor Oil	75
TPH - Diesel	1898
TPH - Gas	583
Polyaromatic hydrocarbons (PAH)	60
Chlorinated organic compounds	5

TABLE 3

NFD POINT MOLATE
GROUNDWATER TREATMENT PLANT
ESTIMATED MAXIMUM INFLUENT METALS CONCENTRATIONS

Constituent	Maximum Total Metals Concentration (μg/L)	Maximum Dissolved Metals Concentrations (μg/L)
Aluminum	11,701	ND (<40)
Antimony	ND (<28)	ND (<28)
Arsenic	8.8	6.6
Barium	296.6	187
Beryllium	0.6	ND (<0.4)
Cadmium	ND (<0.6)	ND (<0.6)
Chromium	11.2	ND (<2.3)
Cobalt	5.9	ND (<2.3)
Copper	15.8	9.0
Iron	15,680	10,100
Lead	40.7	3.0
Magnesium	61,070	60,000
Manganese	3,049	1,910
Mercury	0.8	ND (<0.1)
Nickel	17.8	4.8
Selenium	13.9	ND (<2.3)
Silver	ND (<2.0)	ND (<2.0)
Thallium	ND (<2.0)	ND (<2.0)
Vanadium	23.0	8.5
Zinc	51.7	21.8

Notes:

μg/L micrograms per liter
ND not detected

ATTACHMENT A

OUTFALL DETAILS

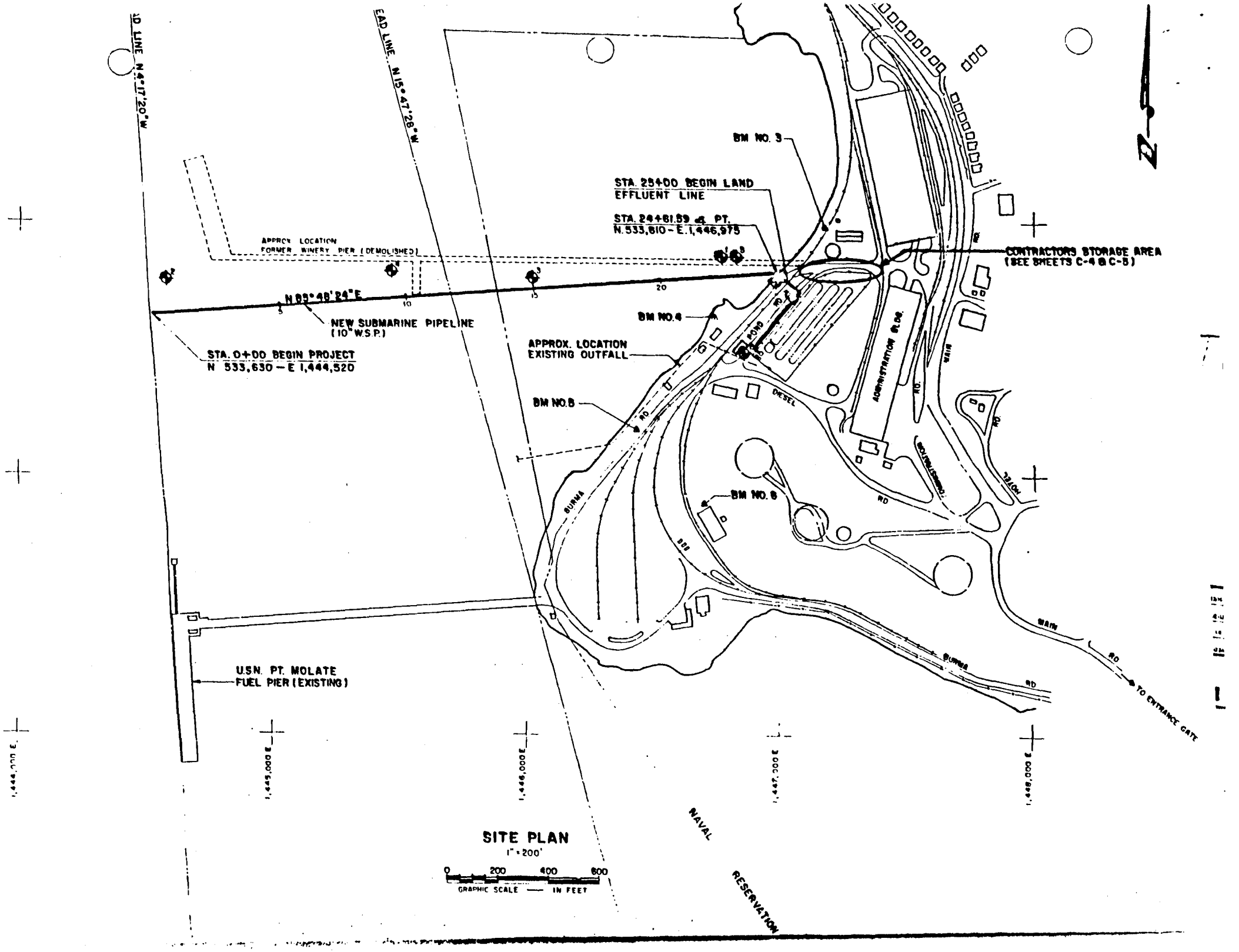

BM NO. 3
STA. 25+00 BEGIN LAND EFFLUENT LINE
STA. 24+61.59 ℄ PT.
N. 533,810 - E. 1,446,975
CONTRACTORS STORAGE AREA (SEE SHEETS C-4 & C-5)
APPROX. LOCATION FORMER WINERY PIER (DEMOLISHED)
N 85°48'24"E
NEW SUBMARINE PIPELINE (10" W.S.P.)
STA. 0+00 BEGIN PROJECT
N 533,630 - E 1,444,520
BM NO. 4
APPROX. LOCATION EXISTING OUTFALL
BM NO. 5
BM NO. 6
ADMINISTRATION BLDG.
DIESEL
BURMA
RD
MAIN
HOTEL
TO ENTRANCE GATE
U.S.N. PT. MOLATE FUEL PIER (EXISTING)
NAVAL RESERVATION
1,445,000 E
1,446,000 E
1,447,000 E
1,448,000 E
SITE PLAN
1" = 200'
0 200 400 600
GRAPHIC SCALE — IN FEET

NOTE:
ALL PIPING AND FITTINGS TO BE 1/4" CEMENT MORTAR LINED AFTER FABRICATION (ALL BUTT WELDED)

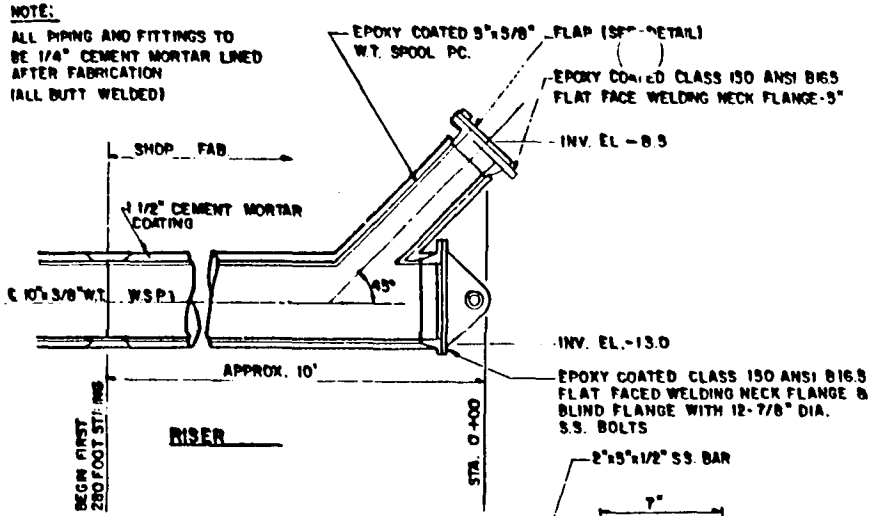

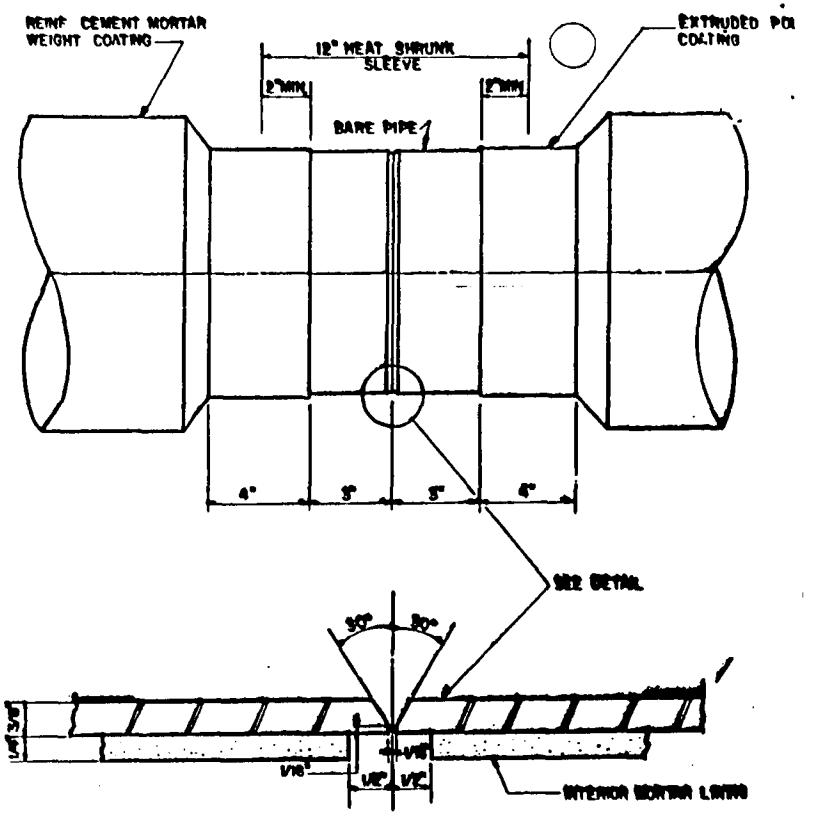

DIFFUSER DETAILS
(SUBMARINE OUTFALL)
NO SCALE
2 | C-2 | C-6

TYPICAL PIPE JOINT
(SUBMARINE OUTFALL)
NO SCALE
3 | C-3 | C-6

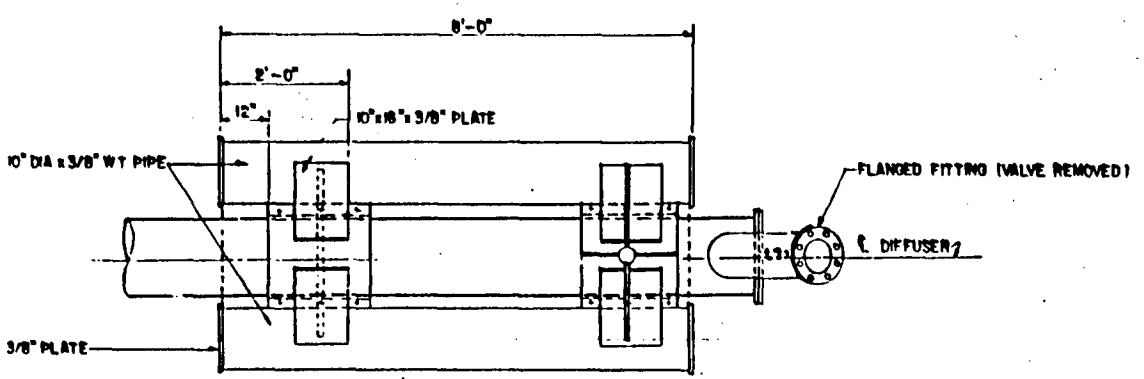

PLAN

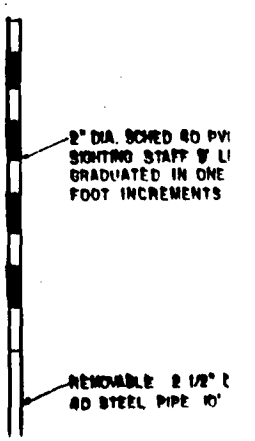

ATTACHMENT B

DILUTION CALCULATIONS

MEMORANDUM

DATE: August 2, 1995

TO: Jeff Reichmuth

FROM: Kirk Olds

SUBJECT: Point Molate Sewer Outfall Dilution Modeling Results

The PLUMES model developed by the EPA for modeling dilution of effluent discharges was used to determine the dilution of sewage at the Point Molate outfall. The following data were input into the model:

a.	Diameter of outfall port:	5 inches
b.	Depth of outfall:	8.5 feet
c.	Effluent flow:	200 gpm
d.	Current:	1.8 knots

The results of the model show that at a distance of 3.55 meters from the outfall a dilution factor of 31.28 is obtained. The plume surfaces at a distance of 28.55 meters from the outfall and has a dilution factor of 257.1. The input and output screens are printed on the following page.

Aug 1, 1995, 15:39:10 ERL-N PROGRAM PLUMES, Ed 3, 3/11/94 Case: 1 of 1
Title Point Molate Sewer Outfall 1 non-linear

tot flow	# ports	port flow	spacing	effl sal	effl temp	far inc	far dis
0.01263	1	0.01263	2400	0.0	20		
port dep	port dia	plume dia	total vel	horiz vel	vertl vel	asp coeff	print frq
2.591	0.1270	0.09919	1.634	1.156	1.156	0.10	500
port elev	ver angle	cont coef	effl den	poll conc	decay	Froude #	Roberts F
1.372	45	0.61	-1.73284	100	0	10.76	636300
hor angle	red space	p amb den	p current	far dif	far vel	K:vel/cur	Stratif #
90	2400	21.9370	0.9200	0.0003		1.777	-4.862E-08

depth	current	density	salinity	temp	amb conc	N (freq)	red grav.
0.0	0.92	21.9370	30	16	0	-0.0003337	0.2325
0.6096	0.92	21.9370	30	16	0	buoy flux	puff-ther
1.219	0.92	21.9370	30	16	0	1.224E-06	0.5403
1.829	0.92	21.9370	30	16	0	jet-plume	jet-cross
2.591	0.92	21.9370	30	16	0	1.005	0.1562
						plu-cross	jet-strat
						0.003772	20.75
						plu-strat	
						94.29	
						hor dis>=	

CORMIX1 flow category algorithm is turned off.
0 day-1, 0.000 hr-1, 0.000 t90hr. 0 to large day-1 range
Help: F1. Quit: <esc>. Configuration:ATNOO. FILE: plmstuff.var;
UM INITIAL DILUTION CALCULATION (nonlinear mode)

plume dep	plume dia	poll conc	dilution	hor dis	
m	m			m	
2.591	0.09919	100.0	1.000	0.000	
2.126	0.7356	3.125	31.28	3.549	
1.053	2.118	0.3800	257.1	28.55	-> surface hit

TABLE 2 – CURRENT DIFFERENCES AND OTHER CONSTANTS

No.	PLACE	Meter Depth	POSITION Latitude	POSITION Longitude	TIME DIFFERENCES Min. before Flood	Flood	Min. before Ebb	Ebb	SPEED RATIOS Flood	SPEED RATIOS Ebb	AVERAGE SPEEDS AND DIRECTIONS Minimum before Flood		Maximum Flood		Minimum before Ebb		Maximum Ebb	
		ft	North	West	h m	h m	h m	h m			knots	Dir.	knots	Dir.	knots	Dir.	knots	Dir.
	SAN FRANCISCO BAY, North Time meridian, 120° W				on San Francisco Bay Ent., p.8													
437	Yellow Bluff, 0.8 mile east of		37° 50.1'	122° 27.3'	−0 20	+0 04	−0 10	+0 13	1.0	0.7	--	--	2.9	022°	--	--	2.3	257°
441	Point Cavallo, 1.3 miles east of		37° 49.9'	122° 26.6'	−0 13	+0 14	+0 10	+0 13	0.8	0.8	--	--	2.4	087°	--	--	2.6	256°
445	Alcatraz Island, 0.5 mile north of <9>		37° 50.1'	122° 25.2'	+0 29	+0 27	−0 41	+0 02	0.8	0.7	--	--	1.8	066°	--	--	2.4	284°
449	Point Blunt, Angel I., 0.5 nmi. SW of	21d	37° 50.73'	122° 25.38'	+0 12	−0 03	−0 29	+0 02	0.4	0.5	--	--	1.2	077°	0.2	326°	1.7	258°
	...do.	40d	37° 50.73'	122° 25.38'	−0 42	−0 24	−0 05	+0 02	0.4	0.4	0.1	349°	1.2	082°	--	--	1.5	258°
	...do.	81d	37° 50.73'	122° 25.38'	−1 10	−0 41	−0 08	−0 11	0.3	0.2	--	--	1.0	088°	--	--	0.8	265°
	...do.	101d	37° 50.73'	122° 25.38'	−1 47	−0 32	−0 05	−1 18	0.3	0.2	0.2	019°	1.0	091°	0.1	191°	0.7	260°
453	Point Blunt, Angel I., 0.25 mile S of		37° 50.8'	122° 25.0'	−0 32	−0 01	−0 08	+0 37	0.6	0.7	--	--	1.7	103°	--	--	2.2	258°
457	Pt. Blunt, Angel I., 0.8 mi. SE of <10>		37° 50.7'	122° 24.3'	---	−0 10	−0 11	−0 43	0.3	0.4	--	--	1.0	086°	--	--	1.3	297°
461	Pt. Blunt, Angel I., 0.25 nmi. east of	21d	37° 51.17'	122° 24.73'	+1 01	−0 18	−0 15	+1 52	0.3	0.5	0.2	050°	1.0	049°	0.1	124°	1.7	185°
	...do.	41d	37° 51.17'	122° 24.73'	+0 11	−0 44	+0 02	+1 31	0.2	0.4	0.1	102°	0.7	037°	0.1	309°	1.4	194°
	...do.	98d	37° 51.17'	122° 24.73'	−0 32	+2 12	+0 17	−0 49	0.3	0.5	--	--	0.8	010°	0.2	278°	1.6	176°
	...do.	118d	37° 51.17'	122° 24.73'	+2 02	+2 07	+0 18	−0 47	0.3	0.5	--	--	0.9	004°	0.1	260°	1.6	168°
465	Angel Island, off Quarry Point		37° 51.8'	122° 24.8'	+1 27	+0 10	−1 42	+1 18	0.2	0.6	--	--	0.5	027°	--	--	1.9	130°
469	Angel Island, 0.75 mile east of		37° 51.8'	122° 24.1'	+0 46	+0 58	+1 03	+1 28	0.4	0.3	--	--	1.1	351°	--	--	0.9	192°
473	Point Simpson, Angel I., 1.05 nmi. E of	21d	37° 52.43'	122° 24.17'	+0 09	+0 56	+0 31	+0 02	0.5	0.2	--	--	1.4	332°	0.3	246°	0.8	177°
	...do.	42d	37° 52.43'	122° 24.17'	−0 15	+1 07	+0 29	+0 02	0.3	0.1	0.1	262°	0.9	336°	0.1	244°	0.5	169°
477	Richardson Bay entrance		37° 51.4'	122° 28.2'	−3 45	−4 22	−3 59	−2 58	0.3	0.2	--	--	0.9	074°	--	--	0.5	225°
481	Raccoon Strait, off Point Stuart		37° 52'	122° 27'	−0 33	−0 04	−0 34	−0 27	0.4	0.6	--	--	1.3	014°	--	--	1.9	226°
485	Raccoon Strait	28d	37° 52.3'	122° 26.52'	−0 33	−0 51	−0 50	−0 41	0.6	0.5	0.2	332°	1.8	047°	0.1	312°	1.8	237°
	...do.	48d	37° 52.3'	122° 26.52'	−0 51	−1 05	−0 40	−0 43	0.6	0.5	--	--	1.8	046°	--	--	1.6	238°
	...do.	77d	37° 52.3'	122° 26.52'	−1 28	−1 11	−0 24	−0 45	0.5	0.4	0.1	147°	1.6	065°	0.1	159°	1.4	245°
489	Raccoon Strait, off Hospital Cove		37° 52.3'	122° 26.3'	---	−0 50	−0 38	−0 29	0.5	0.5	--	--	1.5	037°	--	--	1.6	223°
493	Bluff Point, 0.1 mile east of		37° 53.0'	122° 26.1'	+0 20	−0 38	−0 14	+0 19	0.6	0.6	--	--	1.7	009°	--	--	1.9	147°
497	Bluff Point, 1.15 nmi. east of	21d	37° 53.23'	122° 24.78'	+0 11	+0 34	+0 26	+0 02	0.4	0.3	0.2	085°	1.0	336°	0.3	236°	1.0	167°
501	Southampton Shoal Light, 0.2 mile E of		37° 53'	122° 24'	+0 20	+0 43	+0 21	−0 08	0.3	0.3	--	--	0.9	019°	--	--	1.1	188°
505	Point Chauncey, 1.3 miles east of		37° 53.5'	122° 25.1'	−0 03	+0 30	+0 45	+0 11	0.4	0.4	--	--	1.3	340°	--	--	1.4	162°
509	Point Chauncey, 0.75 nmi. NW of	19d	37° 54.18'	122° 27.53'	−0 01	−0 38	+0 13	+0 02	0.4	0.3	--	--	1.1	317°	--	--	1.0	131°
513	Point Chauncey, 1.25 nmi. north of	21d	37° 54.90'	122° 26.87'	+0 16	−0 03	+0 20	+0 14	0.6	0.5	0.1	074°	1.6	336°	--	--	1.8	159°
	...do.	33d	37° 54.90'	122° 26.87'	−0 43	−0 39	+0 25	+0 04	0.4	0.3	0.2	068°	1.1	355°	0.1	053°	1.1	144°
517	Berkley Yacht Harbor, 0.9 nmi. south of	4d	37° 51.13'	122° 18.67'	−2 00	−1 01	−0 40	−0 58	0.1	0.1	0.1	230°	0.3	152°	--	--	0.2	304°
521	Fleming Point, 1.72 nmi. SW of	3d	37° 52.62'	122° 21.53'	−1 48	−1 14	−0 56	−1 18	0.2	0.1	0.1	178°	0.5	082°	0.1	351°	0.4	259°
525	Point Potrero Reach (buoy "10")		37° 54.18'	122° 22.35'	Current weak and variable													
529	Point Richmond, 0.5 mile west of		37° 54.3'	122° 24.0'	−0 25	+0 09	+0 13	−0 01	0.3	0.3	--	--	0.8	332°	--	--	0.9	142°
533	Point Richmond, 0.8 nmi. NNW of	4d	37° 55.25'	122° 23.80'	−1 57	−1 47	−1 11	−1 51	0.1	0.1	--	--	0.4	325°	--	--	0.4	147°
537	Red Rock, east of		37° 58'	122° 26'	−0 03	+0 11	+0 31	+0 18	0.4	0.4	--	--	1.3	318°	--	--	1.4	175°
541	Red Rock, 0.60 nmi. NNE of	17d	37° 56.40'	122° 25.60'	−0 27	−0 29	+0 13	−0 22	0.6	0.4	0.1	060°	1.8	337°	--	--	1.5	156°
	...do.	23d	37° 56.40'	122° 25.60'	−0 42	−0 14	+0 07	−0 27	0.5	0.4	--	--	1.5	334°	0.1	067°	1.3	145°
	...do.	38d	37° 56.40'	122° 25.60'	−0 54	−0 13	+0 19	−0 23	0.5	0.3	--	--	1.4	335°	0.1	080°	1.0	145°
545	Point San Quentin, 0.82 nmi. east of	15d	37° 56.47'	122° 27.70'	−0 18	+0 10	+0 05	−0 35	0.2	0.2	--	--	0.7	013°	0.1	282°	0.8	182°
549	Point San Quentin, 1.3 nmi. east of	23d	37° 56.53'	122° 27.16'	+0 11	+0 27	+0 38	+0 34	0.4	0.4	--	--	1.2	005°	--	--	1.5	181°
	...do.	38d	37° 56.53'	122° 27.16'	−0 14	+0 27	+0 29	+0 22	0.3	0.3	--	--	1.0	010°	--	--	0.9	186°
553	Point San Quentin, 1.9 miles east of		37° 57.0'	122° 26.4'	+0 43	+0 34	+0 31	+0 48	0.5	0.6	--	--	1.4	014°	--	--	2.1	168°
	SAN PABLO BAY				on Carquinez Strait, p.12													
557	Point San Pablo, midchannel		37° 58'	122° 26'	−1 21	−1 13	−1 12	−1 32	0.9	1.0	--	--	1.6	014°	--	--	2.2	180°
561	Point San Pedro, 0.55 nmi. SE of	20d	37° 58.78'	122° 26.20'	−1 48	−1 45	−1 18	−1 47	1.0	1.1	0.1	095°	2.1	016°	0.1	282°	2.4	192°
	...do.	40d	37° 58.78'	122° 26.20'	−2 04	−2 19	−1 20	−2 17	0.9	0.9	0.1	294°	1.8	014°	0.1	110°	2.0	205°
	...do.	63d	37° 58.78'	122° 26.20'	−2 30	−1 49	−1 22	−1 57	0.8	0.6	0.3	315°	1.1	014°	0.1	111°	1.4	236°
565	Pinole Point, 1.16 nmi. west of	19d	38° 00.48'	122° 23.36'	−2 09	−2 33	−1 50	−2 11	0.4	0.4	--	--	0.9	043°	0.1	130°	0.9	218°
569	Pinole Point, 3.0 nmi. WNW of	8d	38° 01.60'	122° 25.48'	−2 15	−2 27	−1 52	−2 14	0.4	0.4	--	--	0.8	007°	--	--	0.9	185°
573	Pinole Point, 1.2 miles off		38° 01.8'	122° 22.7'	−1 07	−1 19	−0 30	−0 31	0.8	0.7	--	--	1.3	040°	--	--	1.6	236°
577	Pinole Point, 1.27 nmi. NNW of	33d	38° 01.85'	122° 22.63'	−1 29	−1 27	−1 07	−1 13	0.5	0.5	--	--	1.0	054°	--	--	1.0	228°
581	Pinole Point, 1.42 nmi. NNW of	21d	38° 02.03'	122° 22.75'	−1 07	−1 17	−1 05	−1 08	0.5	0.6	--	--	1.1	052°	--	--	1.3	233°

Endnotes can be found at the end of table 2.