APPENDIX B

MATERIALS HANDLING EQUIPMENT OPERATOR TRAINING COURSE

B-1. PURPOSE

This training course establishes the minimum requirements that U.S. Navy personnel must successfully meet prior to being issued a powered industrial materials handling equipment (MHE) license to handle general supply materials (general cargo or stores) and hazardous materials (HAZMAT) other than ammunition and explosives. Refer to NAVSEA SW023-AH-WHM-010 for powered MHE operator licensing requirements when handling ammunition and explosives.

B-2. SCOPE

This course identifies the various types of MHE approved afloat and ashore, defines the operational areas in which the MHE can be operated, addresses operational safety precautions, and concludes with a test that assesses the students knowledge of safety requirements and operational proficiency. Upon satisfactorily completing this course and the medical qualification requirements found in paragraph 4-3, students may be issued a license under the provisions of paragraph 4-4 for handling general supply materials. For the handling of HAZMAT, MHE operators will be required to satisfactorily complete any local training requirements as described in paragraph 4-3.4.

B-3. COURSE VARIATIONS

Commanders, Commanding Officers or Officers-in-Charge (CO/OIC), at their discretion and under their documented approval, may authorize variations as needed to adopt this course to train and license MHE operators.

B-4. CONTENT AND DURATION

For scheduling purposes, this course is approximately 40 hours in length. Given a class size of 2 to 10 students with different experience levels, it takes 8 hours of classroom time to cover the various types of MHE, transportation and storage requirements, operating and reporting requirements, mandatory inspection requirements, bulk storage, operation in confined areas, and the handling of various size loads. The classroom time occurs on the first day and is enforced throughout the week during the practical exercises. Past experience indicates that 24 hours are required for practical exercises covering flatbed, trailer, railcar, ramp, dock and magazine handling operations. These hours are broken down as follows: 8 hours of basic operating and lifting techniques, 4 hours of handling bulk items, 4 hours of maneuvering in confined areas, and 8 hours of handling different size loads. The final 8 hours is a proficiency test consisting of a written test and an operational skills demonstration.

B-4.1. MODIFICATIONS. It is not possible for this course to cover every training scenario for all types of MHE in use, the operational environments encountered, and the abilities of the individual students. For these reasons, satisfactory completion of the classroom material is mandatory and instructors are permitted to modify the practical exercises to accommodate the MHE used and the operational environments encountered at each activity. For example, to issue a license to an individual to operate a 6,000-pound DS Rough Terrain Forklift Truck, the instructor would eliminate operational areas that it would not be used in (a railcar, trailer, etc.) and have the practical exercises performed in appropriate rough terrain (steep ramps) conditions.

B-5. TRANSFER OF COMMAND

If this same MHE operator is subsequently transferred to another activity that has only 4,000-pound EE Reaching/Tiering and 6,000-pound DS Front/Sideloader Forklift Trucks, then, at the discretion of the CO/OIC of the gaining activity, this operator's license may be upgraded based solely on a proficiency demonstration. The individual may be required to complete the gaining activity's licensing course.

NOTE

An employer does not need to retrain an employee in the operation of powered MHE if the employer certifies that the operator has been evaluated and has proven to be competent to operate MHE safely. Where their performance warrants further training, or when new classes/types of MHE or different areas of operation (working conditions) are encountered, operators would need additional training in those areas.

LESSON NO. 1

Introduction

Day 1 - Classroom 1.0 Hour

1. Good morning. My name is _____. Welcome to the course on "Handling General Supplies and Hazardous Materials (other than ammunition and explosives) with Industrial Materials Handling Equipment (MHE)."

2. COURSE REQUIREMENTS.

a. Lecturers and demonstrations are given at the start of each day. Tardiness will not be tolerated.

b. This course shall not be canceled due to inclement weather.

c. Students must attend the classroom, practical demonstrations, and a proficiency test to pass this course.

d. Students may be dropped from this course at the discretion of the instructor.

e. If disruptive, students shall be dismissed from class.

3. TELEPHONE NUMBERS.

a. Emergency _____

b. Safety _____

c. Others _____

4. COURSE CONTENT AND HOURS.

a. The course shall consist of 8 hours of classroom material, 24 hours of practical exercises and concludes with 8 hours of proficiency tests.

(1) Classroom material will consist of identifying the approved types of MHE and forklift attachments, discussing the licensing requirements, reviewing all safety precautions and regulations, reviewing the regulations for using MHE in various hazardous locations, reviewing pre- and post-operational inspection and functional test requirements, identifying human failures that cause accidents, procedures on what to do in the event of an accident or incident, and completing accident reports.

(2) Practical exercises will consist of performing the required pre-operational and post-operational inspections and functional tests, stow and break out various types of loads, operating MHE through designated obstacle courses, loading and unloading a boxcar, and bulk storage.

(3) The proficiency test is given in two parts consisting of a written portion and an operational skills demonstration. Students must score 75 percent or better on each part to pass.

b. Course starts at _____ and ends at _____.

c. Lunch will be from _____ to _____.

5. REGULATIONS.

a. Uniform requirements: Military students must wear the uniform of the day; civilian students must wear proper attire.

b. Smoking regulations: Smoking is allowed only in designated areas.

c. Privately-owned vehicles: Shall be accordance with local law.

d. Housekeeping: Students are responsible for keeping the classroom and workroom clean.

6. TRANSPORTATION (Explain to the class any special requirements)

a. Mornings

b. To and from lunch

c. Evenings

7. PERSONAL PROTECTIVE EQUIPMENT. The following personal protective equipment (PPE) is “mandatory” for this course (students must furnish):

a. Hard hat

b. Safety shoes

8. INTRODUCTION TO NAVSUP PUBLICATION 538. A complete overview of chapters 3, 4, 5, and 8 of this publication will be provided by the instructor.

9. HAZMAT TRAINING. For the handling of HAZMAT, potential operators may be required to be trained and certified under local instructions/regulations, if applicable. The instructor should mention any known local training and certification requirements to the students.

10. INSTRUCTIONAL AIDS.

a. VHS/CD/DVD playback capability

b. Chalkboard

c. Overhead projector

d. Various handouts

11. FORMS.

a. Medical Examiner's Certificate (figure 4-1)

b. MHE Operator's License (figure 4-2)

c. MHE Inspection Form (figure 8-1)

12. RECOMMENDED VIDEOS.

Lesson 2 - Forklift Safety (15 min.)

Lesson 4 - Supervisor Awareness (14 min.)

Lesson 6 - Color of Danger (16 min.)

LESSON NO. 2

Types of Industrial Materials Handling Equipment

Day 1 - Classroom 1.0 Hour

1. OBJECTIVE. Students shall be introduced to the various types of approved MHE and forklift attachments. Students shall be instructed on the differences between operating MHE versus an automobile (e.g., top heavy, loaded and unloaded driving conditions, rear steering, tighter turning radius, etc.).

2. LESSON OUTLINE. Review chapter 3 in detail.

3. TEACHING PROCEDURES. Instructor lectures.

4. INSTRUCTIONAL AIDS (CLASSROOM).

   a. Chalkboard

   b. Overhead projector

   c. Handouts

   d. VHS/CD/DVD playback capability

   e. Movie (Forklift Safety)

5. EQUIPMENT AND MATERIALS. As required.

LESSON NO. 3

Operational Safety Regulations

Day 1 - Classroom 2.0 Hours

1. OBJECTIVE. Students shall be knowledgeable on all MHE safety precautions, regulations for using MHE in specific locations, and securing MHE.

2. LESSON OUTLINE. Review chapter 5 entirely.

3. TEACHING PROCEDURES. Instructor lectures on MHE safety precautions and MHE usage in hazardous locations.

4. INSTRUCTIONAL AIDS.

   a. Classroom

   b. Chalkboard

   c. Overhead projector

5. EQUIPMENT AND MATERIALS. As required

LESSON NO. 4

MHE Inspection

Day 1 - Classroom 0.5 Hour, Worksite 1.0 Hour

1. OBJECTIVE. Students shall be instructed on the required procedures to perform daily pre-operational and post-operational tests and inspections on MHE using MHE Inspection Form (figure 8-1), and to perform annual inspection of forks using Fork Maintenance Inspection Form (figure 8-9).

2. LESSON OUTLINE. Review chapter 8 (paragraphs 8-1 through 8-6) in detail. Make mention of paragraphs 8-7 through 8-9.

3. TEACHING PROCEDURES. Instructor lectures, has students inspect actual MHE and completes MHE Inspection Form (figure 8-1) and Fork Maintenance Inspection Form (figure 8-9). All MHE controls and their functions shall be explained and demonstrated by the instructor.

4. INSTRUCTION AIDS.

   a. VHS/CD/DVD playback capability

   b. Movie (Supervisor Awareness)

   c. Applicable manufacturer's technical manual (for operating controls identification)

5. EQUIPMENT AND MATERIALS.

   a. MHE Inspection Form (figure 8-1)

   b. Fork Maintenance Inspection Form (figure 8-9)

   c. Applicable MHE

LESSON NO. 5

Basic Operation Of Forklift Trucks

Day 2 - Worksite 8.0 Hours

1. OBJECTIVE. Students are required to learn the proper procedures for lifting a load, skills in handling and maneuvering the forklift truck over designated obstacle courses, and spotter requirements.

2. SAFETY PRECAUTIONS TO BE OBSERVED. Instructor shall review selected areas from chapter 5 (primarily paragraphs 5-3 and 5-4) and paragraph 8-2.1.

3. LESSON OUTLINE.

a. Pre-operational inspection on the forklift truck using MHE Inspection Form (figure 8-1) and inspection procedures (page 8-4).

b. Lifting a pallet (nominal 48 x 40 x 36 inches weighing at least 500 pounds).

(1) Approach the pallet squarely, aligning forks between the top and the bottom decking and equal distance from the center stringer.

(2) Enter forks squarely, penetrating not less than three-quarters of the pallet, with or without stops, and shall not extend through the pallet.

(3) Lift the pallet approximately two inches and tilt back.

(4) Raise the pallet approximately 6 inches above the ground/deck.

(5) Look over both shoulders, sound horn and back straight away.

(6) Stop and lower pallet approximately 4 inches above the ground/deck.

(7) Move the pallet to the desired location.

c. Setting the pallet down.

(1) Position the pallet at the proper storage/stowage location.

(2) Level the pallet.

(3) Lower the pallet to the ground/deck.

(4) Look back over both shoulders, sound horn and back straight away from the pallet until the forks clear the pallet.

d. Using the above instructions, lift the same pallet and drive the following pre-designated obstacle courses in both forward and reverse directions as demonstrated by the instructor. These obstacle courses will simulate entering a boxcar from a loading dock, loading onto a flatbed truck, and double stacking unit loads.

(1) A 40-foot long by 52-inch wide straight aisle. (Refer to figure B-1).

(2) A 32-½ foot diameter (16 feet, 3-inch radius) circle passing obstacles alternately on the left and the right. (Refer to figure B-2).

(3) Continue driving the prescribed obstacle courses, observing all the safety regulations, until all students have experienced operating the forklift truck and have undertaken the spotter's responsibilities.

e. Upon completion of step d, perform a post-operational inspection using MHE Inspection Form (figure 8-1) and the inspection procedures (page 8-4).

4. TEACHING PROCEDURES. Instructors shall demonstrate:

a. The proper method of lifting and setting down the pallet.

b. How to operate the loaded forklift truck in both forward and reverse directions using the pre-designated obstacle courses.

c. The proper positioning and signaling for a spotter (paragraph 5-3.4.ee).

5. EQUIPMENT AND MATERIALS.

a. Worksite

b. 4,000/6,000-pound Forklift Truck

c. Palletized loads, as required

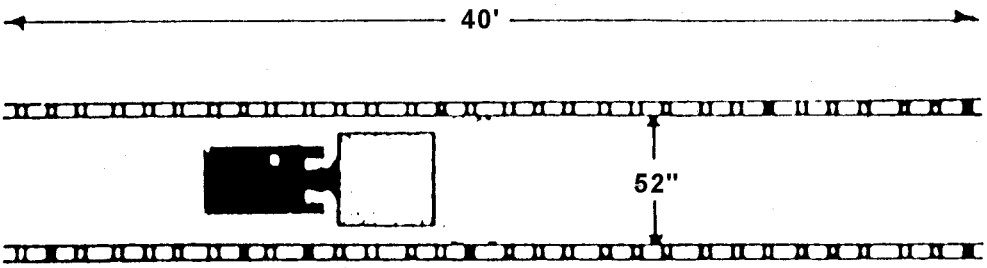

FIGURE B-1. Straight Aisle Course

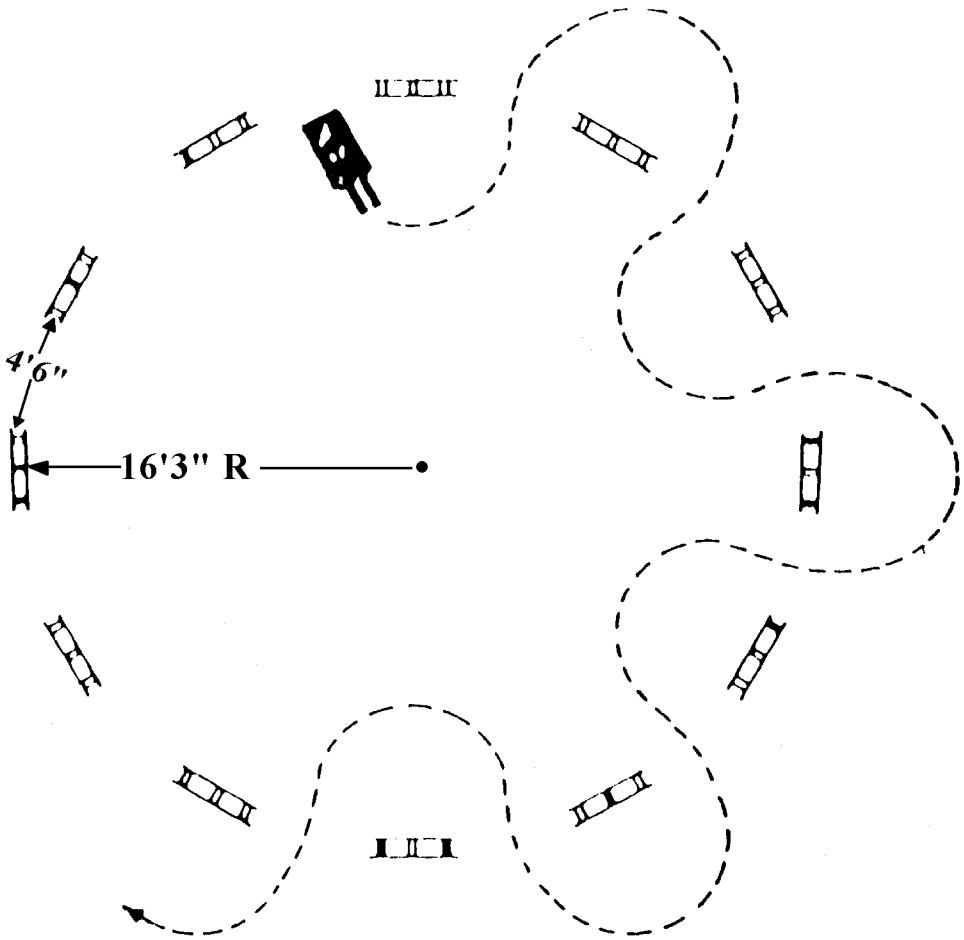

FIGURE B-2. Weaving Obstacle Course

LESSON NO. 6

Storage/Stowage

Day 3 - Classroom 0.5 Hours, Worksite 3.5 Hours

1. OBJECTIVE. Students will be instructed to safely operate MHE, properly store/stow pallet loads and spotter requirements.

2. SAFETY PRECAUTIONS TO BE OBSERVED. Instructor shall review selected areas from chapter 5 (primarily paragraphs 5-3 and 5-4) and paragraph 8-2.1.

3. LESSON OUTLINE.

a. Pre-operational inspection on the forklift truck using MHE Inspection Form (figure 8-1) and inspection procedures (page 8-4).

b. Each student will move six pallet loads (nominal 48 x 40 x 36 inches weighing at least 500 pounds), one pallet at a time, using the following procedures: [pallet loads will be arranged three high by two wide]

(1) Using a forklift and fork stops, if required, approach within 6 inches of the stack of pallets.

(2) Stop forklift truck and raise forks to proper height of highest tiered pallet.

(3) Enter pallet fully and stop.

(4) With foot on the brake, raise the pallet approximately 2 inches and tilt back.

(5) Look over both shoulders, sound horn and back straight away until you've cleared the stack or any other obstructions.

(6) Stop forklift truck and, with foot on the brake, lower the pallet approximately 4 inches above the ground/deck.

(7) Move the pallet to the staging area to begin block stow and stop. The first pallet must be square on the ground/deck. All other pallet must be aligned tight to the first pallet.

(8) With foot on the brake, raise the pallet 6 inches above the stow location.

(9) Level the pallet and drive forward to the proper location where the pallet is to be set down and stop.

(10) With foot on the brake, set the pallet down.

(11) Look over both shoulders, sound horn and back straight away clearing the pallet and any other obstructions. Drive the empty forklift truck to transport remaining pallet loads.

(12) Lift next pallet load repeating the same steps. Continue these procedures until all six pallet loads have been moved and stacked three high by two wide.

(13) Continue driving the prescribed driving requirements, observing all the safety regulations, until all students have experienced operating the forklift truck and have undertaken the spotter's responsibilities (paragraph 5-3.4.ee).

c. Upon completion of step b, perform a post-operational inspection using MHE Inspection Form (figure 8-1) and the inspection procedures (page 8-4).

4. TEACHING PROCEDURES. Instructor shall demonstrate each step in the lesson outline.

5. INSTRUCTIONAL AIDS.

a. VHS/CD/DVD playback capability

b. Movie (Color of Danger)

6. EQUIPMENT AND MATERIALS.

a. Worksite

b. 4,000/6,000-pound Forklift Truck

c. Palletized loads, as required

LESSON NO. 7

Operating MHE In Confined Areas

Day 3 - Classroom 1.0 Hour, Worksite 3.0 Hours

1. OBJECTIVE. Students shall be instructed to safely operate MHE in confined areas, such as small magazines, elevators, motor vehicles and railcars.

2. SAFETY PRECAUTIONS TO BE OBSERVED. Instructor shall review selected areas from chapter 5.

3. LESSON OUTLINE.

a. Inspect the following items on the boxcar:

(1) Wheels are chocked before any loading or unloading operation, except for pier wharf or MILVAN/ISO Container operations.

(2) Doors on loading dock are fully opened.

(3) Floor is in good condition with nails and dunnage removed.

b. Using local procedures, ensure the correct bridgeplate is used. Inspect the bridgeplate for the following:

(1) Enough strength to support the load and the forklift truck.

(2) No broken welds or other deformations.

(3) Properly positioned and secured.

(4) Correct bridgeplate (inboard or outboard).

c. Pre-operational inspection on the forklift truck using MHE Inspection Form (figure 8-1) and the inspection procedures (page 8-4).

d. Students will move eight pallet loads (nominal 48 x 40 x 36 inches weighing at least 500 pounds), one load at a time, into the boxcar using the following procedures:

(1) Ensure the fork carriage is centered.

(2) With foot on the brake, lift the pallet load and tilt back.

(3) Approach the corner of the boxcar parallel to and within 2 inches of the side.

(4) With foot on the brake, level the unit load.

(5) Drive squarely up to and touch the end of the boxcar.

(6) With foot on the brake, move the pallet load to the left or right until touching the side of the boxcar.

(7) With foot on the brake, lower the pallet load to the floor. Pallet load should be flush against the side/end of the boxcar.

(8) Look back over both shoulders, sound horn and back straight away until forks are clear of the pallet.

(9) Repeat steps d(1) through d(8) for the opposite corner of the boxcar.

(10) Repeat steps d(1) through d(8) for the opposite end of the boxcar.

(11) For stacking pallet loads, two tier high, repeat steps d(1) through d(4).

(12) Stop forklift truck within 6 inches of the previously positioned pallet load.

(13) Raise pallet load approximately 6 inches above the previously positioned pallet load.

(14) Repeat steps d(6) and d(7).

(15) Repeat these procedures until all eight pallet loads have been positioned in the boxcar. Continue with this training exercise, observing all the safety regulations, until all students have experienced operating the forklift truck.

e. Upon completion of step d, perform a post-operational inspection using MHE Inspection Form (figure 8-1) and the inspection procedures (page 8-4). Lastly, secure the MHE (paragraph 5-11 or 5-12).

4. TEACHING PROCEDURES.

a. Instructor shall demonstrate each step in the lesson outline.

5. EQUIPMENT AND MATERIALS.

a. 4,000/6,000-pound Forklift Truck

b. Two DODX railcars or, if not available, two dimensionally simulated railcars.

c. Eight palletized loads.

d. Two bridgeplates.

e. Loading dock.

LESSON NO. 8

Handling Long Loads

Day 4 - Classroom 1.0 Hour, Worksite 3.0 Hours

1. OBJECTIVE. Students shall be instructed in the handling of long, unstable palletized loads with MHE and spotter requirements. These palletized loads shall extend beyond the carriage width (minimum 2 feet on each side).

2. SAFETY PRECAUTIONS TO BE OBSERVED. Instructor shall review selected areas from chapter 5.

3. LESSON OUTLINE.

a. Pre-operational inspection on the forklift truck using MHE Inspection Form (figure 8-1) and the inspection procedures (page 8-4).

b. Verify that the trailer wheels are chocked to prevent vehicle movement.

c. Verify that the trailer loading area is free of nails and dunnage.

d. Position six palletized loads (e.g., steel beams, pipes, lumber, etc.) onto a flatbed trailer (three loads wide and two loads high).

(1) Align forklift truck with load; ensure forks are properly spaced to fit into fork pockets.

(2) If required, ensure fork stops are properly installed to prevent forks from protruding through the load.

(3) Insert forks though fork pockets, lift load approximately 2 inches, and tilt back.

(4) Look over both shoulders and back away from the stack until clear.

(5) Lower the load approximately 4 inches from the ground/deck. Move the load to the desired location on the flatbed trailer.

(6) With foot on the brake, level forks and raise the load high enough to clear the bed of the trailer.

(7) Following the spotter’s directions, drive forward and lower the load in the desired position on the flatbed trailer.

(8) Look back over both shoulders, sound horn and back forklift truck straight away until forks clear the load and the flatbed trailer. Lower forks approximately 4 inches above the ground/deck.

(9) Repeating steps d(1) through d(8) to position the second load on the opposite side of the trailer.

(10) Repeating steps d(1) through d(8), position the third load on top of the first load, fourth load on top of second load, etc.

(11) Repeat the above steps to stack the loads on both sides of the trailer, ensuring that they are flush against the blocking and aligned properly fore and aft on the flatbed trailer.

(12) Continue with this training exercise, observing all the safety regulations, until all students have experienced operating the forklift truck.

e. Upon completion of step d, perform a post-operational inspection using MHE Inspection Form (figure 8-1) and the inspection procedures (page 8-4).

4. TEACHING PROCEDURES.

a. Instructor shall demonstrate each step in the Lesson Outline.

5. INSTRUCTIONAL AIDS

a. Classroom - Chalkboard

b. Worksite - Area, as required

6. EQUIPMENT AND MATERIALS (Worksite)

a. 4,000/6,000-pound Forklift Truck

b. Six long, unstable palletized loads (e.g., steel beams, pipes, lumber, etc.).

c. One flatbed trailer or raised platform.

LESSON NO. 9

Operating Electric Pallet Trucks

Day 4 - Worksite 4.0 Hours

1. OBJECTIVE. Students shall learn the proper procedures for inspecting, operating and skills in maneuvering an electric pallet truck over pre-designated obstacle courses.

2. SAFETY PRECAUTIONS TO BE OBSERVED. Instructor shall review selected areas from chapter 5.

3. LESSON OUTLINE.

a. Perform a pre-operational inspection on the electric pallet truck using MHE Inspection Form (figure 8-1) and the inspection procedures (page 8-4).

b. Lifting and lowering a pallet (nominal 48 x 40 x 36 inches weighing at least 500 pounds).

(1) Approach the pallet squarely, aligning forks between the top and bottom decking and an equal distance from the center stringer.

(2) Enter forks squarely into the pallet, penetrating not less than three-quarters through the pallet. Prior to lifting the pallet, verify that the pallet's base is not resting on the pallet truck's wheels.

(3) With brakes on, lift the pallet approximately 2 inches above the ground/deck.

(4) Lower pallet to the ground/deck.

(5) Look back over both shoulders and, if equipped, sound horn and back straight away from the pallet until the forks are clear of the pallet.

c. Designated obstacle courses. Using the above instructions, lift the same pallet and drive the following designated obstacle courses in the forward and reverse directions as demonstrated by the instructor.

(1) A 40-foot long by 52-inch wide straight aisle. (Refer to figure B-1).

(2) A 32-½ foot diameter (16 feet, 3-inch radius) circle passing obstacles alternately on the left and the right. (Refer to figure B-2) An alternate obstacle course for ships, such as cruisers, frigates and destroyers, that have limited deck space is shown in figure B-3.

(3) Continue driving the prescribed obstacle courses, observing all the safety regulations, until all students have experienced operating the forklift truck and have undertaken the spotter's responsibilities.

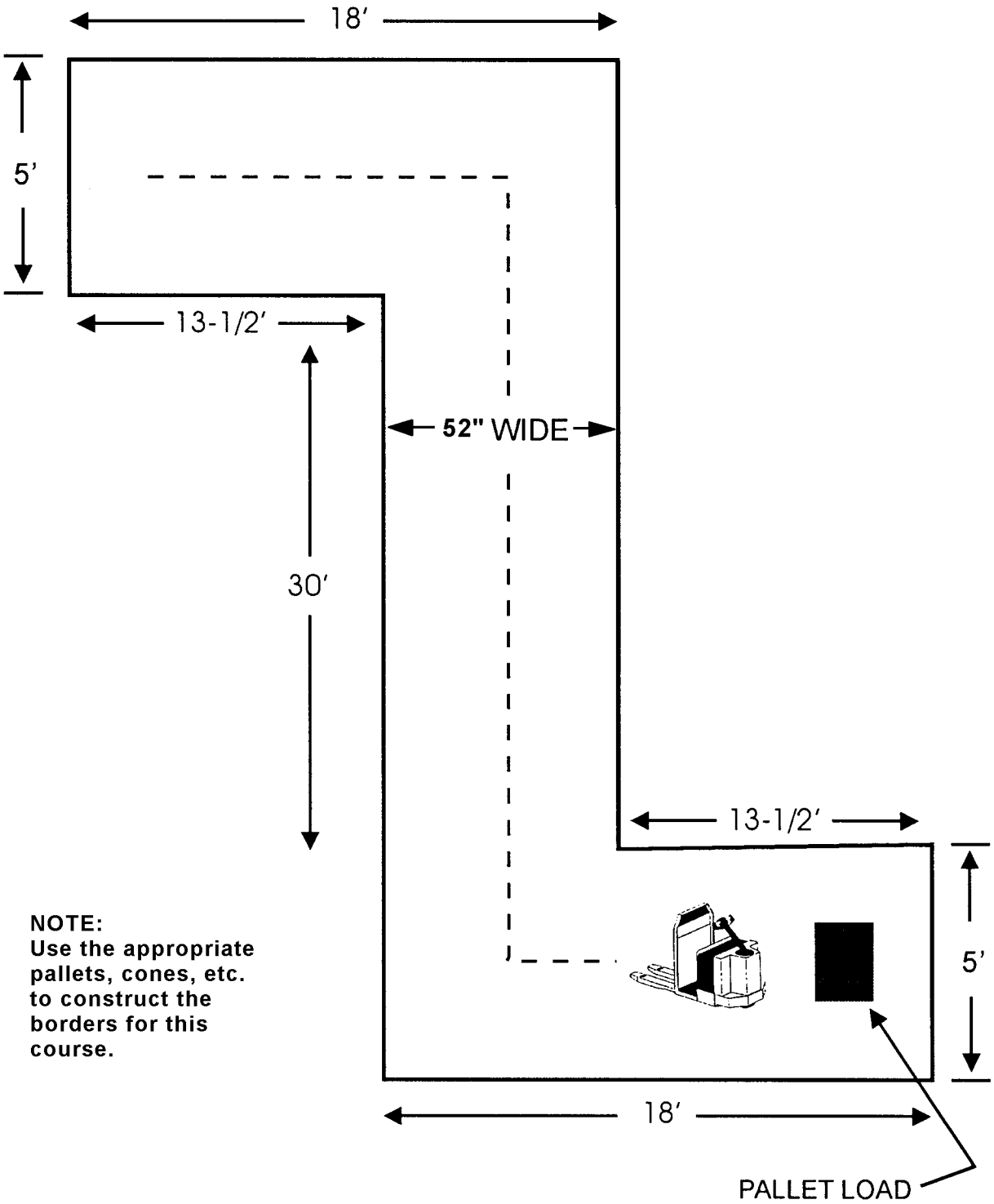

FIGURE B-3. Alternate Shipboard Obstacle Course

d. Upon completion of step c, perform a post-operational inspection, using MHE Inspection Form (figure 8-1) and the inspection procedures (page 8-4).

4. TEACHING PROCEDURES.

a. Instructor shall demonstrate each step in the Lesson Outline.

5. EQUIPMENT AND MATERIALS.

a. MHE Inspection Form (figure 8-1).

b. Type E/EE Electric Pallet Truck.

c. Pallet loads.

d. Pallets, cones, etc. (as appropriate to simulate obstacle course borders).

LESSON NO. 10

Proficiency Test

Day 5 - Jobsite 8.0 Hours

1. OBJECTIVE. Students shall satisfactorily pass a written test and, while observing all safety precautions and regulations, satisfactorily complete an operational skills demonstration consisting of inspecting, operating, and securing MHE.

2. LESSON OUTLINE. This proficiency test shall be conducted in two sections: written and operational skills demonstration. The instructor shall prepare a local written test or request one from the Director, Naval PHST Center (Code 71), Naval Surface Warfare Center, Indian Head Division Detachment Earle, 201 Highway 34 South, Colts Neck, NJ 07722-5023. This test shall minimally consist of 25 multiple choice questions based on the operational safety regulations in chapter 5. The retention of the graded written test is at the discretion of the instructor's CO/OIC in accordance with local procedures. The operational skills demonstration shall consist of six parts given in a continuous sequence as follows:

a. Part 1 - Students shall perform a pre-operational MHE inspection using MHE Inspection Form (figure 8-1) and the inspection procedures (page 8-4). The students shall verbally address each inspection criteria to the instructor. The instructor shall deduct one point for each inspection criteria not reported or performed.

b. Part 2 - Students shall break out one pallet (nominal 48 x 40 x 36 inches weighing at least 500 pounds) from a stack of four pallets (two high by two wide) or two pallets (side-by-side) for electric pallet trucks only. The instructor shall deduct one point for each of the following applicable infractions:

(1) Failure to fasten seat belt, if equipped. See paragraph 5-3.2.g. for shipboard exceptions.

(2) Improper use of fork stop (figure 3-10), if required.

(3) Bumping a pallet.

(4) Improper penetration of forks.

(5) Forks protruding through pallet.

(6) Lifting pallet with tilt control.

(7) Failure to look back over both shoulders before traveling in reverse direction.

(8) Failure to sound horn before traveling in reverse direction.

(9) Failure to have full tilt on load before traveling in any direction.

(10) Dragging pallet to be lifted across the top of the remaining pallet.

(11) Failure to lower pallet approximately 4 inches above the ground/deck before traveling.

(12) Foot not on brake when lifting and tilting.

c. Part 3 - Students shall drive with a pallet (nominal 48 x 40 x 36 inches weighing at least 500 pounds) in the forward and reverse directions through a straight aisle course (40 foot long x 52 inch wide) with 12 pallets, cones, etc., equally spaced along each side. Refer to figure B-1 for straight aisle course illustration. If the student hits two or more pallets, cones, etc., then the student shall not continue the test.

d. Part 4 -

(1) Students shall drive one pallet (nominal 48 x 40 x 36 inches weighing at least 500 pounds) through a 32-1/2 foot diameter obstacle course. The circle's perimeter is formed by placing 12 pallets, cones, etc., at an equal distance spaced 4 feet 6 inches apart from each other. Refer to figure B-1 for the obstacle course illustration. Students will be required to weave in and out between the pallets, cones, etc., in the forward and reverse directions. If the student hits two or more pallets, cones, etc., the student shall not continue this test.

(2) Alternate (Electric Pallet Trucks Only). Aboard ships with limited deck space, such as cruisers, frigates, destroyers, etc., the alternate obstacle course shall be configured in accordance with figure B-1. Students shall lift one pallet (nominal 40 x 40 x 36 inches weighing at least 500 pounds), travel with the load in the reverse direction to the final destination, and then drive in the forward direction back to the original location. The course's borders shall be configured using the appropriate pallets, cones, etc. If the student hits two or more pallets, cones, etc., the student shall not continue the test.

e. Part 5 - Students shall restow one pallet (nominal 48 x 40 x 36 inches weighing at least 500 pounds) onto a stack of four pallets (two high by two wide) or two pallets (side-by-side) for electric pallet trucks only. The instructor shall deduct one point for each of the following applicable infractions:

(1) Failure to restow pallet from opposite side.

(2) Failure to level pallet within 6 inches of stow.

(3) Failure to land pallet squarely.

(4) Lowering pallet with tilt.

(5) Bumping pallet into position.

(6) Failure to look before backing.

(7) Dragging pallet.

(8) Failure to lower forks.

(9) Improper use of spacer.

f. Part 6 - Students shall return the pallet to the original starting position and secure MHE. The instructor shall deduct one point for each of the following applicable infractions:

(1) Failure park MHE in the designated area.

(2) Failure to lower forks to the ground/deck.

(3) Failure to set the parking brake.

(4) Failure to neutralize controls.

(5) Failure to disconnect battery connector cable (electric only) after dismounting MHE.

(6) Failure to remove key.

(7) Each item verbally not reported or performed by the student to the instructor during the post-operational inspection of the MHE, using MHE Inspection Form (figure 8-1) and the inspection procedures (page 8-4).

3. INSTRUCTIONAL PROCEDURES. Instructor shall read the instructions to the students, emphasizing that the students must have the ability to understand and follow written and verbal instructions.

4. INSTRUCTION AIDS.

a. Operational skill test raw score sheet.

b. MHE operator training certificate.

c. MHE operator written test.

5. EQUIPMENT AND MATERIALS.

a. Forklift truck or electric pallet truck, 4000/6000-pound capacity.

b. Four pallets (nominal 48 x 40 x 36 inches weighing at least 500 pounds).

c. MHE Inspection Form (figure 8-1).

d. Pallets, cones, etc. (as appropriate to simulate the obstacle course borders).

OPERATIONAL SKILL TEST RAW SCORE SHEET

PART ONE: Pre-Operational Inspection		Deductions
Color, Markings	Type	
	Restrictions	
	Test Date	
	Capacity	
Battery		
Static Tires or Straps		
External Conditions	Weldments	
	Loose or Missing Bolts	
	Lift Chains	
	Hoses - Leaks	
	Cylinders Leaks	
	Fork Stops	
	Forks	
	Fork Pins	
Battery Connector Cable		
Hydraulic Cylinders	Hoist	
	Tilt	
	Sideshift	
Brakes	Parking Brake	
	Foot Brake	
	Seat Brake	
Seat Belt		
Warning Device (Horn)		
	TOTAL DEDUCTIONS PART ONE	

PART TWO: Breakout Pallet	Deductions
Seat belt not fastened	
Improper use of spacer	
Bumping pallet	
Improper penetration of forks	
Forks protruding through pallet	
Lifting pallet with tilt control	

PART TWO: Breakout Pallet	Deductions
Failure to look before backing	
Failure to sound horn before backing	
Failure to have full tilt on pallet	
Dragging pallet	
Failure to lower pallet approximately 4 inches before traveling	
Foot not on brake when lifting and fitting	
TOTAL DEDUCTIONS PART TWO	

PART THREE: Driving Through Straight Aisle		Deductions
Forward	Pylons Hit	
	Stops/Slows	
Reverse	Pylons Hit	
	Stops/Slows	
TOTAL DEDUCTIONS PART THREE		

PART FOUR: Obstacle Course		Deductions
Forward	Pylons or Pallet Hit	
	Stops/Slows	
Reverse	Pylons or Pallet Hit	
	Stops/Slows	
TOTAL DEDUCTIONS PART FOUR		

PART FIVE: Restow Pallet	Deductions
Failure to restow pallet from opposite side	
Failure to level pallet within 6 inches of stow	
Failure to land pallet squarely	
Lowering pallet with tilt	
Bumping pallet into position	
Failure to look before backing	
Dragging pallet	
Failure to lower forks	
Improper use of spacer	
TOTAL DEDUCTIONS PART FIVE	

PART SIX: Secure MHE		Deductions
Failure to park in designated area		
Failure to lower forks to the ground/deck		
Failure to set parking brake		
Failure to neutralize controls		
Failure to disconnect battery connector cable (electric drive only) after dismounting MHE		
Failure to remove key		
Post-Operational Inspection		**Deductions**
Color, Markings	Type	
	Restrictions	
	Test Date	
	Capacity	
Battery		
Static Tires or Straps		
External Conditions	Weldments	
	Loose or Missing Bolts	
	Lift Chains	
	Hoses - Leaks	
	Cylinders Leaks	
	Fork Stops	
	Forks	
	Fork Pins	
Battery Connector Cable		
Hydraulic Cylinders	Hoist	
	Tilt	
	Sideshift	
Brakes	Parking Brake	
	Foot Brake	
	Seat Brake	
Seat Belt		
Warning Device (Horn)		
	TOTAL DEDUCTIONS PART SIX	

The total number of deductions from the six parts must be 25 or less to pass the operational skill test.

PART 1	PART 2	PART 3	PART 4	PART 5	PART 6	TOTAL

This form is provided as an example and its use is at the instructors' discretion. The retention of this information is at the discretion of the instructors CO/OIC in accordance with local procedures.

MHE OPERATOR TRAINING CERTIFICATE

The student named below successfully completed the written and operational skill demonstration tests and I recommend that the command issue the appropriate MHE license in accordance with NAVSUP Publication 538.		
Student Name (*last, first, middle initial*)		
Rank/Grade	Parent Command	
The student named above successfully demonstrates proficiency on the following MHE on dates indicated and I recommend that the command issue/upgrade the appropriate MHE license in accordance with NAVSUP Publication 538.		
MHE: Class/Capacity/Type and Manufacturer's Name	Instructor Name (last, first middle initial) Instructor Signature/Date Parent Command	Evaluator Name (last, first, middle initial) Evaluator Signature/Date Parent Command Evaluator's Description of Workplace
This certificate is an example of the documentation that must be maintained by the parent command issuing/upgrading the MHE license. The information must be documented and maintained, however the format is optional.		

APPENDIX C

MATERIALS HANDLING EQUIPMENT ASSIST CHECKLIST

C-1. GENERAL

This appendix provides a checklist for shipboard and shore based use, as appropriate, to assist the ships crew or personnel ashore in evaluating their MHE operations and to provide needed assistance and information.

Ship/Shore Activity Name _____

Date of Visit _____

C-2. MHE ADMINISTRATION

a. Determine who owns/reports on the MHE.

Dept	_____	POC	_____	Phone	_____
Dept	_____	POC	_____	Phone	_____
Dept	_____	POC	_____	Phone	_____

b. Advise the ship/shore activity of their NAVICP-M, TYCOM, Fleet Issue Control Point (FICP) and MHE In-Service Engineering Agency (ISEA) representatives.

NAVICP-M:	Code 058133	POC	_____	DSN	_____
				Comm	_____
		POC	_____	DSN	_____
				Comm	_____
TYCOM:	_____	POC	_____	DSN	_____
				Comm	_____
FICP:	_____	POC	_____	DSN	_____
				Comm	_____
ISEA:	PHST Center 713RS	POC	_____	DSN	_____
				Comm	_____

c. The following documents should be on board. (Check if available)

(1) NAVSUPINST 10490.33 (series) _____

(2) NAVICPINST 10490.4 (series) _____

(3) NAVSEA SW023-AH-WHM-010 _____

(4) Technical Manuals for each type of MHE on board _____

(5) Allowance Parts List (APL) for each type of truck on board _____
(Note: Not all MHE have APL's; check EMACS to verify)

(6) Product Quality Deficiency Report SF 368, figure 7-2 (blanks) _____

(7) MHE Inspection Form, figure 8-1 (Daily Checklist Form) (blanks) _____

(8) **(Shipboard Only)** OPNAV 4790/CK (Ship's Configuration Change Form) _____

(9) **(Shipboard Only)** 3-M Data Maintenance Index Pages and Maintenance Requirement Cards for all MHE on board. _____

(10) **(Shipboard Only)** Technical Feedback Report (TFBR) Form _____

If any of this data is unavailable, the ship should be directed to work through their TYCOM representative and local FICP coordinator. Shore activities should be directed to work through their FISC Regional Manager and NAVCIP-M to obtain this data. Any item with a stock number can be ordered through normal MILSTRIP process.

C-3. MHE MANAGEMENT

C-3.1. ALLOWANCE VERIFICATION.

a. Verify that MHE aboard conforms to the reported ships inventory from the EMACS data base which can be obtained from the local FISC. All MHE should have a USN painted on the truck. List any discrepancies.

_____

_____

_____

b. Verify/ascertain from ships force that all MHE aboard meets the ships operating conditions. For example turning radius, charging stations, underclearance, overhead clearance, proper safety rating and weight certification for ordnance handling (NAVSEA SW023-AH-WHM-010), cold storage application, etc. Make any recommendations for changes/additions/deletions.

_____

_____

_____

c. Verify that each piece of MHE has all the proper markings. Note any discrepancies. Reproduce this page as needed. Refer to paragraph 5-7 for specific MHE marking requirements and sizes.

(1) USN registration number (i.e. 13-12345) _____

(2) Safety Rating (i.e. EE) painted on truck and indicated on plate _____

(3) Manufacturers Identification Plate _____

(4) Shipping data plate _____

(5) Wheel loading plate _____

(6) Vehicle Weight _____

(7) Safe Working Load (i.e. SWL 6000 pounds)_____

(8) Slinging and tiedown positions marked _____

(9) Safety Warning “NO RIDERS” _____

(10) Fuel Type (i.e. Diesel Fuel Only) _____

(11) Structural Testing Certification (i.e., painted on truck w/manufacturer’s name and test date) or Periodic Weight Test Certification Form _____

(12) Paint Markings (i.e., Lead/Chromate Free) on newer and SLEP MHE. _____

(13) Brake Markings on newer and SLEP MHE “Non-Asbestos Brake Liner Used Replacement Shall Be Non-Asbestos”. _____

(14) Verify that trucks have no unauthorized modifications. If any are found, check Equipment History File for authorization from NAVICP-M. List any discrepancies.

_____

_____

(15) Check trucks for proper corrosion control/paint. All exposed surfaces should be painted or adequately protected. Note any deficiencies.

_____

_____

(16) Verify that trucks have daily operators log and that any major deficiencies are being reported.

_____

_____

(17) **(Shipboard Only)** 4790 CK submitted. _____

(18) **(Shipboard Only)** Shipboard Marking "SHIPBOARD USE APPROVED" _____

(19) **(Shore Activity Only)** Verify that trucks have seat belts/safety harness (stock selector only). List any discrepancies/plan of action to install seat belts.

_____

_____

_____

C-3.2. QUALITY DEFICIENCIES REPORTS (QDR'S).

a. What action does the ship/shore activity take if they have problems with a new piece of MHE? (Are ships working with TYCOM/FICP Rep's or are shore activities working with NAVICP-M/FISC Reps?)

_____

_____

_____

b. Do they understand the QDR process _____? If not explain. All shipboard QDR's go to the TYCOM first.

_____

_____

c. The ship/shore activity should maintain a file on QDR's and if not resolved they should send out a tracer. Review tracking system and provide any recommendations.

_____

_____

C-3.3. REPLACEMENTS.

a. What procedures does the ship/shore activity use to obtain a replacement forklift and/or transfer/dispose of an existing piece of MHE? Does the ship/shore activity work through their TYCOM (ships only) and Regional FISC **(shore activity only)**? Are trucks returned in good condition?

_____

_____

b. What procedures does the ship/shore activity use to request an increase to their current MHE allowance or advise if an alternative piece of MHE is required? Is the ship working through their TYCOM/ FICP MHE Representatives?

_____

_____

c. **(Shore Activity Only)** Is the shore activity aware of the MHE Service Life Extension Program (SLEP) through their Regional FISC and how to obtain replacement/SLEP MHE?

_____

_____

d. **(Shore Activity Only)** Does the shore activity lease any MHE and are they aware of the services offered through their Regional FISC MHE representative?

_____

_____

C-3.4. REPORTING/TRACKING.

a. Is the ship/shore activity using EMACS to track their MHE? If not, have them contact TYCOM or Regional FISC MHE representative to get access and training. Verify they have completed their last annual report and that they are submitting quarterly reports.

_____

_____

_____

b. Does each piece of MHE have a equipment history file containing all pertinent information? If not, provide assistance in establishing some type of record keeping system.

_____

C-4. MHE REPAIR AND MAINTENANCE

C-4.1. PREVENTIVE MAINTENANCE (PM).

a. Verify that PM is being performed and what procedure or guidance is used to schedule preventive maintenance? Are they using the Technical Manual and the MIP **(shipboard only)** to schedule the work?

_____

_____

_____

b. Who does the PM work and are they qualified? Do they follow the Technical Manual and/or the MRC's **(shipboard only)** for performing PM? Any deficiencies with the MIP/MRC's should be reported to the MHE ISEA by a TFBR with a copy to the TYCOM **(shipboard only)**. Any technical manual deficiencies should be reported to NAVICP-M with a copy to the TYCOM **(shipboard only)**.

_____

_____

_____

c. How are PM actions recorded and are they included in the EMACS report and Equipment History File?

_____

_____

_____

d. Who verifies that PM has been accomplished and checks on quality of service?

_____

_____

_____

e. **(Shore Activity Only)** Is the shore activity aware of the Regional FISC MHE program for maintaining their MHE? This program is not available in all regions. Verify with Regional FISC to see what is currently available.

_____

_____

_____

C-4.2. REPAIRS.

a. Verify how unscheduled maintenance is performed. Are personnel qualified to perform the repairs? What level repairs are performed?

_____

_____

_____

b. Do they ever use other repair sources (i.e., PWC, SIMA, contractors) and which ones? Are they aware of the Regional MHE Manager's ability to coordinate all maintenance actions for them?

_____

_____

_____

c. Verify that procedures are in place to check all repairs to ensure the integrity of the Safety Ratings. Ensure all covers, gaskets, shields etc. are reinstalled on the trucks after repairs. Also only qualified repair parts should be used. Note any deficiencies. Advise on corrective action plans to take.

_____

_____

_____

d. Verify that all maintenance actions are properly recorded in the Equipment History File and in EMACS. If EMACS is not used, how are actions being recorded? Note any deficiencies.

_____

_____

_____

e. Do they have proper tools and area to perform required maintenance operations? Make any recommendations.

_____

_____

_____

f. Is there a quality control program in place to verify all repairs? Who inspects repairs after completion?

_____

_____

_____

C-4.3. PARTS SUPPORT.

a. Do they have adequate parts/COSAL support to perform PM operations? If no, list deficiencies and check to see a request to change the APL has been made.

_____

_____

_____

b. What procedures are in place to order repair parts? For ships, what about when in port or deployed? Do they know they can go to Regional FISC/TYCOM for assistance or call 1-800 numbers in some instances?

_____

_____

_____

c. How do they order replacement batteries for electric forklifts? Are they shipboard qualified?

_____

_____

_____

C-4.4. MAINTENANCE TRAINING.

a. Do they feel they are adequately trained to perform PM, repairs and maintenance? If not, what type of training do they feel they need?

_____

_____

_____

b. Are the technical manuals and MRC's **(shipboard only)** adequate guides in performing PM and other maintenance and repairs? Any recommendations?

_____

_____

_____

c. Are any procedures in place when maintenance personnel rotate out to brief replacements?

_____

_____

_____

C-5. MHE OPERATIONS

C-5.1. OPERATOR TRAINING AND LICENSING.

a. What type of training do the MHE operators receive? Are the operators trained in the proper use of MHE for ordnance handling, and hazardous material? If not, training needs to be obtained.

_____

_____

_____

b. Are licenses issued to each operator and by whom?

_____

_____

_____

c. What controls are in place to prevent unauthorized use of MHE? Are they effective? Make any recommendations.

_____

_____

_____

C-5.2. STORAGE/STOWAGE.

a. How is MHE stored/stowed? Are electric trucks protected from the elements and used for interior operations? Are all other trucks protected from the elements when not in use for long periods of time?

_____

_____

_____

b. **(Shipboard Only)** Are tiedowns used when MHE is not being used for long periods of time?

_____

_____

_____

C-5.3. BATTERY CHARGING.

a. Verify that adequate chargers/charging stations are available for all electric MHE. Note any discrepancies.

_____

_____

_____

b. Are electric batteries of sufficient amp capacity for required operations?

_____

_____

_____

C-5.4. MHE INSPECTION FORM (DAILY INSPECTIONS).

a. Who reviews the MHE Inspection Form? Are these forms maintained for each piece of MHE? List any discrepancies.

_____

_____

_____

b. Who reviews the MHE Inspection Form and are maintenance actions being corrected in a timely manner?

_____

_____

_____

C-5.5. ACCIDENTS.

a. How are accidents reported and what corrective measures are taken?

_____

_____

_____

Any comments/recommendations to help improve MHE operations:

_____

_____

_____

Assist Team Member _____

Mailing Address _____

_____

_____

_____

Phone Comm. _____

DSN _____

Email Address _____

After completing form, provide a copy to the ship/shore activity (and to ship's TYCOM).
Send original to:

Commander
Naval Inventory Control Point (NAVICP)
Code 058133 (T. Lewis)
5450 Carlisle Pike
P.O. Box 2020
Mechanicsburg, PA 17055-0788

This page left intentionally blank

APPENDIX D

SHIPMENT AND TRANSPORTATION OF MHE

D-1. GENERAL

This appendix provides shipment and transportation guidelines for Materials Handling Equipment (MHE) intended to be transported on enclosed vans and trailers, or on flatbed trailers from short term storage and long term storage. Additionally, general truckload requirements are provided to properly and safely block and brace MHE for transportation. These procedures are presented to ensure MHE will not be degraded or damaged during shipment. If provided, refer to manufacturer recommendations supporting any shipment and transportation requirements associated with MHE. The truckload requirements presented in this chapter apply to all classes of MHE provided they can physically be capable of being transported by the offering motor vehicle.

D-2. SHORT TERM STORAGE REQUIREMENTS

MHE intended to be shipped from short-term storage, described in chapter 11, requires an inspection, operational test, and maintenance procedures prior to shipment.

D-2.1. INSPECTION, TEST AND MAINTENANCE. The following requirements will be performed on each unit:

a. Conduct an initial receipt inspection on each unit in accordance with paragraph 8-4.

b. Operate the unit for a minimum of 30 minutes.

c. Perform the periodic inspection, exercising and maintenance with the requirements specified in paragraph 11-8 and with the Maintenance Requirement Card (MRC), as required, based on the total storage time interval.

d. Accompany the appropriate technical manual and equipment history file with each piece of MHE.

D-2.2. SHIPMENT REQUIREMENTS. The following procedures document the general shipment requirements prior to loading MHE onto a motor vehicle:

a. Whenever practical, enclosed-type motor vehicles shall be used to transport MHE. Flatbed trailers containing waterproof tarpaulins may be used for the transportation of MHE. When tarpaulins are used, they shall be properly secured to prevent abrasion damage to the painted MHE surfaces.

b. Forks shall be secured in carriage detents with the latches closed.

c. Folding-type forks shall be secured for shipment in accordance with figures D-1, D-2, and D-3.

d. Forks that are non-folding or that are detachable shall be secured to the carriage using steel strapping or web straps. Free ends of the web straps shall be properly secured to prevent abrasion damage to the painted MHE surfaces.

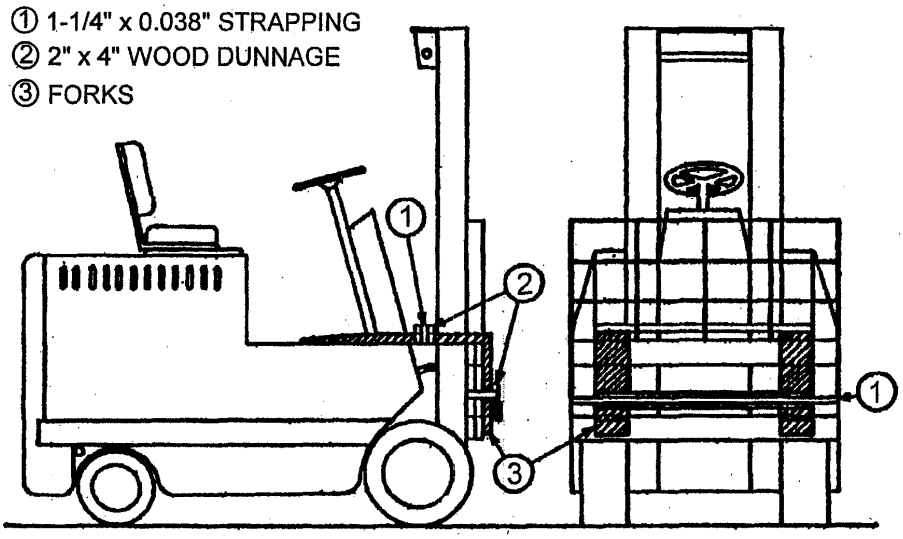

FIGURE D-1. Typical Application of Metal Strapping Securing Forks to Truck

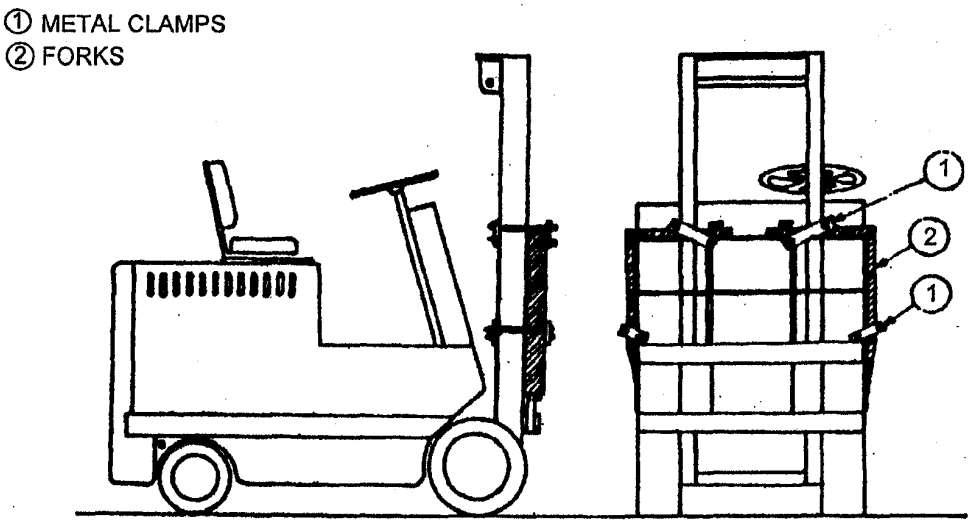

FIGURE D-2. Typical Application of Metal Clamps Securing Forks to Truck

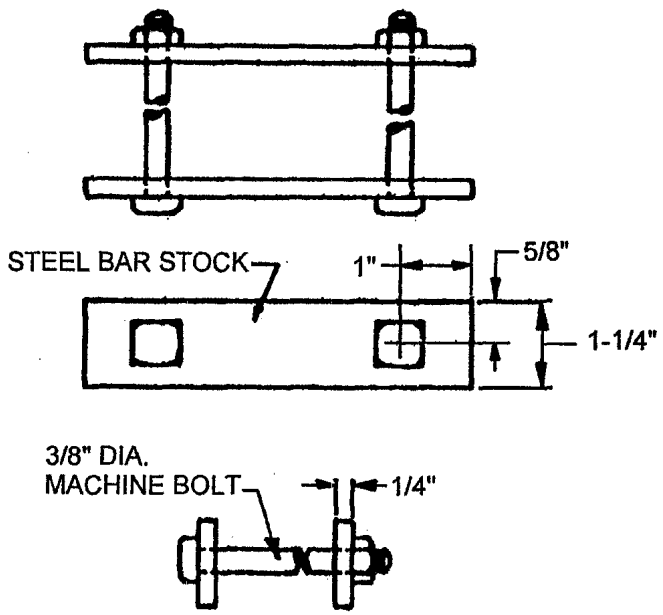

FIGURE D-3. Clamping Device Used for Securing Forks on MHE

D-2.3. TRANSPORTATION REQUIREMENTS. Upon completion of the requirements specified in paragraphs D-2.1 and D-2.2, MHE shall be properly blocked and braced onto a motor vehicle with the truckload requirements described in paragraph D-4.

D-3. LONG TERM STORAGE

MHE intended to be shipped from long-term storage, described in chapter 12, requires an inspection, operational test, and maintenance procedures prior to shipment.

D-3.1. INSPECTION, TEST AND MAINTENANCE. The following requirements will be performed on each unit:

a. De-preserve engines, transmissions, fuel systems, hydraulic systems, brake systems, etc. If applicable, clean battery contactors on electric MHE. Clean armatures, as required.

b. Drain and refill all fluids with manufacturer recommended fluids.

c. Conduct an initial receipt inspection on each unit in accordance with paragraph 8-4.

d. Operate the unit for a minimum of 30 minutes.

e. Perform the periodic inspection, exercising and maintenance requirements specified in paragraph 12-8 and with the Maintenance Requirement Card (MRC), as required, based on the total storage time interval.

f. Accompany the appropriate technical manual, parts, test equipment as supplied, and the equipment history file with each piece of MHE.

D-3.2. SHIPMENT REQUIREMENTS. The shipment requirements specific in paragraph D-2.2 for short term storage also apply for long term storage.

D-3.3. TRANSPORTATION REQUIREMENTS. Upon completion of the requirements specified in paragraphs D-3.1 and D-3.2, MHE shall be properly blocked and braced onto a motor vehicle with the truckload requirements described in paragraph D-4.

D-4. TRUCKLOAD REQUIREMENTS

All MHE being offered for transportation on a motor vehicle shall be properly blocked and braced in accordance with NAVSEASYSCOM Drawing 6214257. This drawing illustrates full and less than full truckload requirements for reaching and tiering, and for sit-down type forklift trucks. However, these requirements apply to all other MHE classes that are physically capable of being transported on enclosed vans and trailers or on flatbed trailers.

APPENDIX E

MANUFACTURER REPAIR TIME STANDARDS

E-1. GENERAL

This appendix identifies actual repair time standards provided by the respective industrial Materials Handling Equipment (MHE) manufacturers. These time standards may be used in place of or in conjunction with the general repair time standards documented in chapter 10 for establishing a measurement and comparison of the actual time consumed during maintenance operations using Equipment Management and Control System (EMACS) or other local cost control programs. The actual manufacturer repair time standards are presented as follows:

- Hyster Times Guide
- Kalmar Allis-Chalmers (AC) Labor Standard Guide
- Liftking Industries Inc. Repair Time Schedule

This page left intentionally blank

REPAIR JOBS • RELATED PARTS

Q2

REPAIR JOBS • RELATED PARTS

HYSTER TIMES GUIDE

UNISOURCE™

This Hyster publication is reprinted with the permission of Hyster Company.

852645

REPAIR JOBS • RELATED PARTS

REPAIR JOBS • RELATED PARTS

This Hyster Publication is reprinted with the permission of Hyster Company

Q2 TIMES GUIDE

THIS BOOKLET SUMMARIZES SERVICE TIMES FOR MANY COMMON REPAIRS TO HYSTER LIFT TRUCKS. IT WAS COMPILED ON THE BASIS OF RECOMMENDATIONS FROM A CROSS-SECTION OF HYSTER DEALERS.

THE TIMES SHOWN ARE MEANT TO BE GUIDELINES. ACTUAL CONDITION OF THE UNIT UNDERGOING REPAIR SHOULD BE CONSIDERED WHEN MAKING ESTIMATES.

NOTE CAREFULLY THE DETAILED DESCRIPTION GIVEN FOR EACH JOB LISTED. THIS DEFINES THE SCOPE OF WORK TO BE DONE IN THE TIME SHOWN. IF YOU PLAN TO DO MORE OR LESS THAN WHAT IS COVERED BY THESE DESCRIPTIONS, ADJUST THE TIME ESTIMATES ACCORDINGLY.

THE BOOKLET IS DIVIDED INTO FIVE SECTIONS: **INTERNAL COMBUSTION, ELECTRIC, MODIFICATIONS, PERIODIC MAINTENANCE, AND UPRIGHT / CARRIAGE**. THUMB TABS ARE PROVIDED IN THE TABLES OF CONTENTS FOR QUICK ACCESS TO ANY OF THE FIVE SECTIONS.

A COMPLETE INDEX OF THE JOB CODING SYSTEM IMMEDIATELY FOLLOWS THE TABLE OF CONTENTS.

TABLE of CONTENTS

COMPONENT SECTION / JOB CODE REFERENCE..... II

INTERNAL COMBUSTION LIFT TRUCKS IC-00

ELECTRIC LIFT TRUCKS..... E-00

MODIFICATIONS M-00

PERIODIC MAINTENANCE PM-00

UPRIGHT AND CARRAIGE U-00

This page left intentionally blank

POWER UNIT

**	AA	INSTALL REBUILT ENGINE
**	AB	RESEAL ENGINE, FRONT ONLY
**	AC	RESEAL ENGINE, COMPLETE
**	AD	REPLACE HEAD GASKET
**	AE	MAJOR TUNE-UP
**	AF	MINOR TUNE-UP
**	AG	SPIN-ON OIL FILTER CONVERSION
**	AH	REPLACE DISTRIBUTOR
	AI	ADJUST GOVERNOR
	AJ	ADJUST TIMING
*	AK	INSTALL NEW ENGINE (AA)
**	AL	REPLACE MOTOR MOUNTS
**	AM	REPLACE FYLWHEEL RING GEAR
**	AN	REPLACE EXHAUST MUFFLER
*	AP	REPLACE EXHAUST GASKET (AN)
*	AR	REPLACE TAIL PIPE (AN)
*	AS	REPLACE GOVERNOR/PUMP GASKET (AB)
	AT	RESURFACE CYLINDER HEAD
**	AV	OVERHAUL INTAKE/EXHAUST VALVES

POWER UNIT COOLING SYSTEM

**	BA	OVERHAUL COOLING SYSTEM
*	BB	REPLACE THERMOSTAT (BA)
**	BC	REPLACE WATER PUMP
**	BD	REPLACE COOLANT HOSES & BELT-THERMOSTAT
	BE	REPLACE ANTI-FREEZE
	BF	CLEAN & REPAIR RADIATOR
	BG	RECORE RADIATOR
**	BH	REPLACE RADIATOR
*	BI	REPLACE RADIATOR CAP (BA)
*	BJ	REPLACE FAN BELTS (BA)
**	BK	REBUILD FAN DRIVE
	BL	REPAIR COOLANT RECOVERY (BA)

CLUTCH

**	CA	CLUTCH OVERHAUL
*	CB	SEAL CLUTCH HOUSING (CA)
**	CC	SEAL CLUTCH BOOSTER
**	CD	CLUTCH LINKAGE CONVERSION
*	CE	REPLACE CLUTCH RELEASE SLEEVE & BEARING (CA)
	CF	ADJUST CLUTCH
*	CG	REPLACE CLUTCH BOOSTER (CC)
	CH	REPAIR CLUTCH LINKAGE
	CJ	REPLACE CLUTCH LINKAGE
*	CK	REPLACE CLUTCH RETURN SPRINGS (CA)
*	CL	REPLACE JET PUMP (EB)

TRANSMISSION - DRIVE LINE

**	DA	OVERHAUL TRANSMISSION
**	DB	OVERHAUL DRIVE AXLE/ FINAL DRIVE

TRANSMISSION (continued)

**	DC	REPLACE/REPAIR DIFFERENTIAL
*	DD	REBUILD CLUTCH PACK (DA)
*	DF	RESEAL PINION SHAFT (DA)
*	DG	REPLACE RING GEAR & PINION (DC)
**	DH	REPLACE TORQUE CONVERTOR
**	DI	REPLACE TRANSMISSION PUMP
*	DJ	RESEAL TRANSMISSION PUMP (DI)
**	DK	REPAIR TRANSMISSION LINKAGE
*	DL	REPLACE MONOTROL PEDAL (MK)
*	DM	REPLACE MONOTROL PEDAL PAD (MK) RESEAL TRANSMISSION PAN (DA)
**	DN	REPLACE DRIVE AXLE HUB
*	DP	REPLACE TRANSMISSION FLUID & FILTER (DA)
	DR	ADJUST INCHING PEDAL
**	DS	RESEAL/REPAIR TRANSMISSION CONTROL VALVE
**	DT	REPAIR SPEED REDUCER
**	DU	REPLACE DRIVE LINE U-JOINT
*	DV	REPLACE DRIVE AXLE WHEEL SEAL (DB)
*	DW	RESEAL DRIVE AXLE HOUSING (DB)
*	DX	REPLACE DRIVE AXLE SHAFT (DB)
*	DZ	REPLACE WHEEL BEARING - DRIVE AXLE (DB)

HYDRAULIC SYSTEM

**	EA	RESEAL HYDRAULIC CONTROL VALVE
**	EB	REPLACE ASSORTED HYDRAULIC COMPONENTS
**	EC	REPLACE HYDRAULIC OIL & FILTER
**	ED	REPLACE HYDRAULIC PUMP DRIVE CHAIN AND COMPONENTS
**	EE	REPAIR HYDRAULIC CONTROL LINKAGE
*	EF	REPLACE HYDRAULIC VALVE LINKAGE SPRING (EA)
*	EG	REPLACE HYDRAULIC FILTER ELEMENT (EC)
**	EH	REPLACE HYDRAULIC PUMP
*	EI	RESEAL MAIN HYDRAULIC PUMP (EH)
*	EJ	RESEAL AUXILIARY CONTROL VALVE (EA)
	EK	CLEAN HYDRAULIC TANK
**	EL	REPAIR DRIVE SHAFT MAIN HYD PUMP
	EM	RESEAL HOSE REEL
	EN	RESEAL JUNCTION BLOCK
	EP	REPLACE HEADER HOSES
*	ER	REPLACE/ADJUST TWO-SPEED VALVE (EB)
*	ES	REPAIR TILT LOCK VALVE (EB)
**	ET	REPLACE HYDRAULIC CHARGE PUMP - OIL CLUTCH

TILT CYLINDER

**	FA	PACK & SEAL TILT CYLINDER
**	FB	REPLACE TILT CYLINDER
*	FC	REPLACE TILT CYLINDER ANCHOR PIN (FB)
	FD	REPLACE TILT CYLINDER ROD END/PIN
	FE	REPLACE TILT CYLINDER ROD
	FF	REPAIR TILT LOCK VALVE
*	FG	REPLACE TILT LOCK VALVE (EB)

** INDICATES PARTS FOR THIS JOB ARE COVERED BY A PULL LIST

* INDICATES PARTS FOR THIS JOB ARE COVERED BY THE PULL LIST INDICATED IN PARENTHESES.

STEERING

••	GA	REBUILD STEERING AXLE
••	GB	REPAIR STEERING GEAR/COLUMN
••	GC	REPAIR/REPLACE STEERING HAND PUMP
••••	GD	PACK & SEAL STEERING CYLINDER
	GE	REPLACE STEERING DRAG LINK
••	GF	REPAIR STEERING DRAG LINK (GA)
••	GG	REPLACE BALL STUD (GA)
••	GH	REPLACE STEERING CYLINDER
••	GI	REPLACE STEERING TIE ROD ENDS
••	GJ	REPLACE STEERING PUMP
••	GK	REPLACE STEERING PUMP BELT (BA)(GJ)
	GL	ADJUST STEERING PRESSURE
••	GM	REPLACE STEERING FLOW DIVIDER (EB)
••	GP	REPLACE STEERING COLUMN (GB)
••	GR	REPLACE STEERING WHEEL (GB)
••	GS	REPLACE SPINDLE
••	GU	REPLACE KING PIN & BEARINGS
••	GV	REPLACE CENTER ARM & BEARINGS
••	GW	REPLACE WHEEL BEARING-STEER AXLE (GS)

BRAKES

••	HA	BRAKE JOB
••	HB	REPLACE PARK BRAKE CABLES
••	HC	RESEAL/REPAIR PARK BRAKE
••	HD	REPLACE BRAKE SPRINGS AND ATTACH HDW (HA)
••	HE	REPLACE BRAKE ADJUSTER & LINKAGE (HA)
••	HG	REPLACE PARK BRAKE SHOES (HC)
•	HH	REPLACE BRAKE PEDAL PAD (HA)
••	HJ	REPLACE/REBUILD BRAKE MASTER CYLINDER
	HK	RESEAL PARK BRAKE CYLINDER
	HL	REPLACE PARK BRAKE CYLINDER
••	HM	REPLACE PARK BRAKE HANDLE (HB)
••	HN	REPLACE BRAKE DRUM (ONE SIDE)
	HP	BLEED AND ADJUST BRAKES

ELECTRICAL - I.C.

••	IA	REPLACE ASSORTED ELECTRICAL COMPONENTS
	IB	REPLACE WIRE HARNESS
••	IC	REPLACE BATTERY CABLE (IH)
••	ID	REPLACE IGNITION SWITCH (IA)
	IE	REPLACE DASH PANEL
••	IF	REPLACE STARTER
•	IG	REPLACE BATTERY HOLD-DOWN (IH)
••	IH	REPLACE BATTERY
••	II	REPLACE HORN (IA)
••	IJ	REPLACE HORN BUTTON/RING (IA)
•	IK	REPLACE HOURMETER (IA)
••	IL	REPLACE DASH PANEL LIGHTS (IA)
••	IM	REPLACE DASH PANEL GAUGES (IA)
••	IN	REPLACE DISTRIBUTOR (AH)
••	IP	REPLACE ALTERNATOR
••	IR	REPLACE GENERATOR (IA)

ELECTRICAL - I.C. (continued)

••	IS	REPLACE VOLTAGE REGULATOR (IA) (IP)
••	IT	REPLACE COIL (IA)
••	IU	REPLACE SENDING UNITS (IA)
•	IV	REPLACE SPARK PLUG WIRES (AE)
	IW	REPLACE FUSES
•	IX	REPLACE STARTER DRIVE (IF)

APPEARANCE

••	JA	PAINT & DECAL
	JB	STEAM CLEAN
	JC	REPAIR/REPLACE DRIVING LIGHTS
	JD	REPAIR/REPLACE WARNING LIGHTS
	JE	REPAIR/REPLACE BACK-UP ALARM
	JF	INSTALL/REPLACE FIRE EXTINGUISHER

FRAME

••	KA	REPLACE ASSORTED FRAME PARTS
••	KB	REPLACE HOOD LATCH (KA)
••	KC	REPLACE SEAT RAILS (KA)
•	KD	ADJUST HOOD LINKAGE (KA)
•	KE	REPLACE FRAME HANGER BUSHINGS (KA)
••	KF	REPLACE SEAT CUSHION (KA)

UPRIGHT & CARRIAGE

••	LA	PACK & SEAL HOIST CYLINDER
••	LB	REPLACE UPRIGHT ROLLER & WEAR PLATES
••	LC	SHIM & ADJUST CARRIAGE (LM)
••	LD	RESEAL SIDESHIFT CRG CYL
••	LE	REPLACE UPRIGHT MOUNTING BUSHINGS
••	LF	REPAIR/REPLACE CHAIN SHEAVE
••	LG	REPLACE LOAD CHAIN/ANCHOR
	LH	ADJUST HOIST CHAIN/ANCHOR
••	LJ	REPLACE UPRIGHT WEAR STRIPS (LB)
••	LK	REPLACE STUB SHAFTS (LC)
	LL	REPLACE UPRIGHT LATCHES/SHAFTS
••	LM	REPLACE CARRIAGE ROLLERS
	LN	REPLACE UPRIGHT HANGER BRACKET
	LP	REPLACE HOIST CYL. BLEEDER HOSE
••	LR	REPAIR KE HOIST MECHANISM

FUEL SYSTEM

••	MA	REPLACE/REBUILD CARBURETOR
••	MB	ASSORTED FUEL SYSTEM COMPONENTS
••	MC	REPLACE CHOKE/KILL CABLE (MB)
••	MD	REPLACE/REPAIR LPG LOCK OFF
•	ME	REPLACE LPG HOSE (MW)
•	MF	REPLACE/REPAIR GOVERNOR (MA)
••	MG	REPLACE FUEL PUMP
••	MH	REPLACE FUEL FILTER (MB)
••	MK	REPLACE THROTTLE PEDAL
	ML	REPAIR FUEL INJECTOR
••	MM	REPLACE FUEL INJECTOR
	MN	REPAIR INJECTOR PUMP

FUEL SYSTEM (continued)

**	MP	REPLACE INJECTOR PUMP
*	MR	REPLACE FUEL SUPPLY LINE SEALS DIESEL (MM)
**	MT	REPLACE/REBUILD LPG VAPORIZER
**	MU	REPLACE/REPAIR THROTTLE CABLE
	MV	REPAIR/ADJUST THROTTLE LINKAGE
**	MW	REPLACE LPG TANK

TIRES

	NA	REPLACE DRIVE TIRE
	NB	REPLACE STEER TIRE

PERIODIC MAINTENANCE

**	PB	SCHEDULE "B" PM SERVICE
**	PC	SCHEDULE "C" PM SERVICE
**	PD	SCHEDULE "D" PM SERVICE

ELECTRICAL E.T.

**	RA	REPLACE ASSORTED ELECTRIC COMPONENTS
*	RB	REPLACE FUSE (RA)
*	RC	REPLACE KEY SWITCH (RA)
*	RD	REPLACE HOURMETER (RA)
*	RE	REPLACE HORN (RA)
*	RF	REPLACE HORN SWITCH/KIT (RA)
*	RG	REPLACE POTENTIOMETER (RA)
	RH	ADJUST POTENTIOMETER
*	RR	REPLACE RESISTOR (RA)
*	RS	REPLACE SWITCH (RA)
	RT	TROUBLESHOOT/REPAIR ELECTRICAL SYSTEM
	RW	REPAIR/REPLACE WIRING/CONNECTORS

CONTROL PANEL

**	SA	REPLACE STATIC PANEL COMPONENTS
*	SB	REPLACE CONTROL CARD (SA)
	SC	TUNE/ADJUST CONTROL CARD
*	SD	REPLACE SCR (SA)
*	SE	REPLACE RECTIFIER (SA)
*	SF	REPLACE CAPACITOR (SA)
*	SG	REPLACE SNUBBER (SA)
*	SH	REPLACE THERMAL PROTECTOR (SA)
*	SI	REPLACE TERMINAL BLOCK (SA)
*	SJ	REPLACE TRANSFORMER (SA)

CONTACTOR PANEL

**	TA	REPLACE CONTACTOR PANEL COMPONENTS
	TB	TROUBLESHOOT/REPAIR SCR CONTROLS
**	TC	REPLACE CONTACTOR TIPS
*	TD	REPLACE COIL (TA)
*	TE	REPLACE CONTACTOR (TA)
*	TF	REPLACE CONTROL SWITCH (TA)

TRACTION MOTOR

**	UA	REPAIR TRACTION MOTOR
*	UB	REPLACE TRACTION MOTOR BRUSHES (UA)
	UC	REBUILD TRACTION MOTOR
*	UD	REPLACE TRACTION MOTOR (UA)

HOIST PUMP MOTOR

**	UE	REPAIR HOIST PUMP MOTOR
*	UF	REPLACE HOIST PUMP MOTOR BRUSHES (UE)
	UG	REBUILD HOIST PUMP MOTOR
*	UH	REPLACE HOIST PUMP MOTOR (UE)

STEER PUMP MOTOR

**	UI	REPAIR STEER PUMP MOTOR
*	UJ	REPLACE STEER PUMP MOTOR BRUSHES (UI)
	UK	REBUILD STEER PUMP MOTOR
*	UL	REPLACE STEER PUMP MOTOR (UI)

INTERNAL COMBUSTION LIFT TRUCKS

COMPONENT SECTION **PAGE**

POWER UNIT IC-01
COOLING SYSTEM IC-06
CLUTCH IC-09
TRANSMISSION IC-12
HYDRAULIC SYSTEM IC-18
TILT CYLINDER IC-22
STEERING SYSTEM IC-24
BRAKE SYSTEM IC-30
ELECTRICAL IC-34
APPEARANCE IC-41
FRAME IC-43
FUEL SYSTEM IC-45

This page left intentionally blank

POWER UNIT

JOB DESCRIPTION	JOB CODE
INSTALL NEW OR REBUILT ENGINE - GASOLINE OR LPG	AA
INSTALL REBUILT ENGINE - DIESEL	AA
RESEAL ENGINE - FRONT ONLY	AB
RESEAL ENGINE - COMPLETE	AC
REPLACE HEAD GASKET	AD
MAJOR TUNE-UP	AE
MINOR TUNE-UP	AF
REPLACE DISTRIBUTOR	AH
REPLACE MOTOR MOUNTS	AL
REPLACE RING GEAR (FLYWHEEL)	AM
REPLACE MUFFLER - STANDARD EXHAUST	AN
REPLACE MUFFLER - OVERHEAD EXHAUST	AN
REPLACE GOVERNOR	AS
VALVE JOB	AV

AA - INSTALL NEW OR REBUILT ENGINE - GASOLINE OR LPG

INCLUDES ALL TIME REQUIRED TO INSTALL ENGINE AND RELATED PARTS. THIS INCLUDES REPLACEMENT OF FUEL PUMP (OR REBUILD VAPORIZER), WATER PUMP, THERMOSTAT, BELTS, HOSES, RADIATOR CAP, MOTOR MOUNT PADS, ENGINE OIL, ENGINE OIL FILTER, FUEL FILTER, ANTI-FREEZE, BATTERY CABLES, SPARK PLUGS, IGNITION WIRES, DISTRIBUTOR CAP, ROTOR AND POINTS AND CONDENSER IF APPLICABLE. REPLACE CONVERTER SEAL AND FLYWHEEL SEAL WHERE APPLICABLE. REMOVE RADIATOR AND CLEAN. INSPECT THE FOLLOWING AND ADVISE CUSTOMER IF REPAIR IS ADVISABLE: GAUGES AND INDICATOR LIGHTS, FLYWHEEL RING GEAR, CLUTCH PARTS, CONVERTER PUMP, CARBURETOR, STARTER, ALTERNATOR, VOLTAGE REGULATOR, BELT PULLEYS. RETORQUE CYLINDER HEAD BOLTS AND CHECK VALVE ADJUSTMENTS ON OVERHEAD VALVE ENGINES AFTER ENGINE REACHES OPERATING TEMPERATURE.

S20-30A	S25-35XL	S30-50C	S30-60ES	S40-60XL	S60-100E	S60-100B	S70-120XL	S125-150A	S25-40XM	S45-65XM	S135-155XL	
20	22	20	26	22	26	20	26	24	24	24	26	
H20-30E	H25-35XL	H30-60F/H	H40-60H/J	H40-60XL	H60-90C	H60-110E	H70-110XL	H110-150F	H135-155XL	H150-250E	H150-275H	H25-40XM
20	22	20	26	20	20	26	26	22	26	24	24	24
H45-65XM	H165-280XL	H300-360XL	H300-350B	KE	P40-50A	P60-80A						
24	NA	NA	NA	20	20	20						

AA - INSTALL REBUILT ENGINE - DIESEL

INCLUDES LABOR TO INSTALL ENGINE AND RELATED PARTS. THIS INCLUDES REPLACEMENT OF LIFT PUMP, THERMOSTAT, BELTS HOSES, RADIATOR CAP, MOTOR MOUNT PADS, ENGINE OIL ENGINE OIL FILTER, FUEL FILTERS, ANTI-FREEZE AND BATTERY CABLES. REPLACE CONVERTER SEAL AND FLYWHEEL SEAL WHERE APPLICABLE. REBUILD OR REPLACE INJECTORS AND REBUILD INJECTOR PUMP. INSPECT THE FOLLOWING AND ADVISE CUSTOMER IF REPAIR OR REPLACEMENT IS ADVISABLE: GAUGES AND INDICATOR LIGHTS, FLYWHEEL RING GEAR, CLUTCH PARTS, CONVERTER PUMP, STARTER, ALTERNATOR, BATTERY AND BELT PULLEYS. RETORQUE CYLINDER HEAD BOLTS AND CHECK VALVE ADJUSTMENTS AFTER ENGINE REACHES OPERATING TEMPERATURE.

S20-30A	S25-35XL	S30-50C	S30-60ES	S40-60XL	S60-100E	S60-100B	S70-120XL	S125-150A	S25-40XM	S45-65XM	S135-155XL	
20	22	20	26	24	26	20	26	24	24	24	26	
H20-30E	H25-35XL	H30-60F/H	H40-60H/J	H40-60XL	H60-90C	H60-110E	H70-110XL	H110-150F	H135-155XL	H150-250E	H150-275H	H25-40XM
20	22	20	26	24	22	26	26	24	26	26	26	25
H45-65XM	H165-280XL	H300-360XL	H300-350B	KE	P40-50A	P60-80A						
24	26	26	27	NA	20	20						

AB - RESEAL ENGINE - FRONT ONLY

INCLUDES ALL TIME REQUIRED TO REPLACE GASKETS AND SEALS ON FRONT OF ENGINE AND INSPECT MOTOR MOUNTS AND FRAME MOUNTING BUSHINGS. INCLUDES PAN GASKET REPLACEMENT ON SOME ENGINES.

S20-30A	S25-35XL	S30-50C	S30-60ES	S40-60XL	S60-100E	S60-100B	S70-120XL	S125-150A	S25-40XM	S45-65XM	S135-155XL	
9	10	9	9	10	9	9	14	15	13	14	15	
H20-30E	H25-35XL	H30-60F/H	H40-60H/J	H40-60XL	H60-90C	H60-110E	H70-110XL	H110-150F	H135-155XL	H150-250E	H150-275H	H25-40XM
11	10	9	14	14	9	9	14	9	14	9	9	12
H45-65XM	H165-280XL	H300-360XL	H300-350B	KE	P40-50A	P60-80A						
13	14	13	13	9	9	9						

AC - RESEAL ENGINE - COMPLETE

INCLUDES ALL TIME TO REMOVE ENGINE, DISASSEMBLE SUFFICIENTLY TO REPLACE ALL GASKETS AND SEALS, INSPECT CYLINDER WALLS AND ROD BEARINGS FOR WEAR, CHECK HEAD AND BLOCK FOR FLATNESS, REASSEMBLY AND REPLACEMENT OF ALL GASKETS AND SEALS RELATED TO ENGINE REINSTALLATION. RUN ENGINE TO OPERATING TEMPERATURE, CHECK FOR LEAKS, RETORQUE HEAD AND READJUST VALVES ON OVERHEAD VALVE ENGINES. CHANGE ENGINE OIL AND OIL FILTER.

S20-30A	**S25-35XL**	**S30-50C**	**S30-60ES**	**S40-60XL**	**S60-100E**	**S60-100B**	**S70-120XL**	**S125-150A**	**S25-40XM**	**S45-65XM**	**S135-155XL**	
22	24	22	28	24	28	22	26	26	26	26	28	
H20-30E	**H25-35XL**	**H30-60F/H**	**H40-60H/J**	**H40-60XL**	**H60-90C**	**H60-110E**	**H70-110XL**	**H110-150F**	**H135-155XL**	**H150-250E**	**H150-275H**	**H25-40XM**
22	24	22	23	23	22	28	25	22	26	26	26	26
H45-65XM	**H165-280XL**	**H300-360XL**	**H300-350B**	**KE**	**P40-50A**	**P60-80A**						
26	28	29	30	22	22	22						

AD - REPLACE HEAD GASKET

INCLUDES ALL TIME TO REMOVE HEAD, CHECK HEAD AND BLOCK FOR FLATNESS, RETAP BOLT HOLES IN BLOCK, CLEAN OR REPLACE HEAD BOLTS, REPLACE, GASKET, HEAD AND RELATED PARTS, RUN ENGINE TO OBTAIN OPERATING TEMPERATURE, RETORQUE HEAD, READJUST VALVES ON OVERHEAD VALVE ENGINES AND CHANGE ENGINE OIL AND FILTER.

S20-30A	**S25-35XL**	**S30-50C**	**S30-60ES**	**S40-60XL**	**S60-100E**	**S60-100B**	**S70-120XL**	**S125-150A**	**S25-40XM**	**S45-65XM**	**S135-155XL**	
3.5	5	3.5	5	5	5	3.5	5*	3.5	6.5	6.5	5*	
H20-30E	**H25-35XL**	**H30-60F/H**	**H40-60H/J**	**H40-60XL**	**H60-90C**	**H60-110E**	**H70-110XL**	**H110-150F**	**H135-155XL**	**H150-250E**	**H150-275H**	**H25-40XM**
3.5	5	5	5	5	3.5	5	5*	5	5*	5*	5*	6.5
H45-65XM	**H165-280XL**	**H300-360XL**	**H300-350B**	**KE**	**P40-50A**	**P60-80A**						
6.5	9	9	9	3.5	5	3.5						

* EACH SIDE

AE - MAJOR TUNE-UP

REPLACE POINTS, PLUGS, CONDENSER, ROTOR, DISTRIBUTOR CAP AND IGNITION WIRES. CHECK COMRESSION, CLEAN OR REPLACE FUEL FILTER, CHANGE AIR FILTER ELEMENT, SET TIMING, ADJUST CARBURETOR AND GOVERNOR. ADD TIME FOR VALVE ADJUSTMENT.

S20-30A	**S25-35XL**	**S30-50C**	**S30-60ES**	**S40-60XL**	**S60-100E**	**S60-100B**	**S70-120XL**	**S125-150A**	**S25-40XM**	**S45-65XM**	**S135-155XL**	
2	2	2	2	2	2	2	2.5	2.5	2	2	2.5	
H20-30E	**H25-35XL**	**H30-60F/H**	**H40-60H/J**	**H40-60XL**	**H60-90C**	**H60-110E**	**H70-110XL**	**H110-150F**	**H135-155XL**	**H150-250E**	**H150-275H**	**H25-40XM**
2	2	2.5	2	2	2.5	2	2.5	2.5	2.5	2.5	2.5	2
H45-65XM	**H165-280XL**	**H300-360XL**	**H300-350B**	**KE**	**P40-50A**	**P60-80A**						
2	NA	NA	NA	2	2	2.5						

AF - MINOR TUNE-UP

REPLACE POINTS, PLUGS, CONDENSOR, ROTOR AND AIR FILTER ELEMENT. CLEAN FUEL FILTER, SET TIMING AND ADJUST CARBURETOR.

S20-30A	**S25-35XL**	**S30-50C**	**S30-60ES**	**S40-60XL**	**S60-100E**	**S60-100B**	**S70-120XL**	**S125-150A**	**S25-40XM**	**S45-65XM**	**S135-155XL**	
1	1	1	1	1	1	1	1	1	1	1	1.5	
H20-30E	**H25-35XL**	**H30-60F/H**	**H40-60H/J**	**H40-60XL**	**H60-90C**	**H60-110E**	**H70-110XL**	**H110-150F**	**H135-155XL**	**H150-250E**	**H150-275H**	**H25-40XM**
1	1	1	1	1	1	1	1	1	1	2	1	1
H45-65XM	**H165-280XL**	**H300-360XL**	**H300-350B**	**KE**	**P40-50A**	**P60-80A**						
1	NA	NA	NA	1	1	1						

AH - REPLACE DISTRIBUTOR

S20-30A	S25-35XL	S30-50C	S30-60ES	S40-60XL	S60-100E	S60-100B	S70-120XL	S125-150A	S25-40XM	S45-65XM	S135-155XL	
1	1	1	1	1	1	1	1	1	1	1	1	
H20-30E	H25-35XL	H30-60F/H	H40-60H/J	H40-60XL	H60-90C	H60-110E	H70-110XL	H110-150F	H135-155XL	H150-250E	H150-275H	H25-40XM
1	1	1	1	1	1	1	1	1	1	1	1	1
H45-65XM	H165-280XL	H300-360XL	H300-350B	KE	P40-50A	P60-80A						
1	NA	NA	NA	1	1	1						

AL - REPLACE MOTOR MOUNTS

DOES NOT PROVIDE FOR REMOVAL OF BROKEN STUDS OR REPLACEMENT OF BRACKETS.

	S20-30A	S25-35XL	S30-50C	S30-60ES	S40-60XL	S60-100E	S60-100B	S70-120XL	S125-150A	S25-40XM	S45-65XM	S135-155XL	
+	4	4	4	5	4	5	4	5	5	4.5	4	5.5	
&	6	5	6	6	5	6	6	6	6	5	5	6	
	H20-30E	H25-35XL	H30-60F/H	H40-60H/J	H40-60XL	H60-90C	H60-110E	H70-110XL	H110-150F	H135-155XL	H150-250E	H150-275H	H25-40XM
+	4	4	4	4	4	5	5	5	5	5	5	3	4.5
&	6	5	6	6	5	6	6	6	6	6	6	4	5
	H45-65XM	H165-280XL	H300-360XL	H300-350B	KE	P40-50A	P60-80A						
+	4.5	NA	NA	NA	4	4	5						
&	5	6	6	6	6	6	6						

+ GAS/LPG
& DIESEL

AM - REPLACE RING GEAR (FLYWHEEL)

S20-30A	S25-35XL	S30-50C	S30-60ES	S40-60XL	S60-100E	S60-100B	S70-120XL	S125-150A	S25-40XM	S45-65XM	S135-155XL	
13	14	12	20	14	20	12	16	12	15	15	16	
H20-30E	H25-35XL	H30-60F/H	H40-60H/J	H40-60XL	H60-90C	H60-110E	H70-110XL	H110-150F	H135-155XL	H150-250E	H150-275H	H25-40XM
13	14	14	14	14	10	11	15	11	16	14	14	15
H45-65XM	H165-280XL	H300-360XL	H300-350B	KE	P40-50A	P60-80A						
15	16	16	16	7	9	9						

(ADD 2 HRS IF REPLACING REAR CRANKSHAFT SEAL)

AN - REPLACE MUFFLER - STANDARD TYPE

S20-30A	S25-35XL	S30-50C	S30-60ES	S40-60XL	S60-100E	S60-100B	S70-120XL	S125-150A	S25-40XM	S45-65XM	S135-155XL	
4	4	2	2	4	2	2	4	2.5	3.5	3.5	3.5	
H20-30E	H25-35XL	H30-60F/H	H40-60H/J	H40-60XL	H60-90C	H60-110E	H70-110XL	H110-150F	H135-155XL	H150-250E	H150-275H	H25-40XM
12	3.5	4	4	4	2.5	3.5	4	2.5	4	2.5	2.5	3.5
H45-65XM	H165-280XL	H300-360XL	H300-350B	KE	P40-50A	P60-80A						
3.5	3	3	3	2	2.5	2.5						

AN - REPLACE MUFFLER - OVERHEAD EXHAUST

S20-30A	S25-35XL	S30-50C	S30-60ES	S40-60XL	S60-100E	S60-100B	S70-120XL	S125-150A	S25-40XM	S45-65XM	S135-155XL	
2.5	2.5	2.5	2.5	2.5	2.5	2.5	2.5	2.5	NA	NA	3	
H20-30E	H25-35XL	H30-60F/H	H40-60H/J	H40-60XL	H60-90C	H60-110E	H70-110XL	H110-150F	H135-155XL	H150-250E	H150-275H	H25-40XM
2.5	2.5	2.5	2.5	2.5	2.5	2.5	2.5	2.5	2.5	2.5	2.5	3
H45-65XM	H165-280XL	H300-360XL	H300-350B	KE	P40-50A	P60-80A						
3	2.5	2.5	2.5	2	2.5	2.5						

AS - REPLACE GOVERNOR

S20-30A	S25-35XL	S30-50C	S30-60ES	S40-60XL	S60-100E	S60-100B	S70-120XL	S125-150A	S25-40XM	S45-65XM	S135-155XL	
2.5	2	2.5	1.5	1.5	1.5	8	1.5	9	2.5	2.5	2	
H20-30E	H25-35XL	H30-60F/H	H40-60H/J	H40-60XL	H60-90C	H60-110E	H70-110XL	H110-150F	H135-155XL	H150-250E	H150-275H	H25-40XM
2.5	2	2	2	1.5	8	1.5	1.5	9	1.5	2	2	2.5
H45-65XM	H165-280XL	H300-360XL	H300-350B	KE	P40-50A	P60-80A						
2.5	4	4	4	9	2	2.5						

AV - VALVE JOB

INCLUDES ALL LABOR TO INSTALL ALL PULL LIST PARTS AS REQUIRED FOR EACH MODEL. REMOVE HEAD, CLEAN CARBON FROM HEAD AND BLOCK AND CHECK FOR FLATNESS. REPLACE OR GRIND VALVES, GRIND SEATS, REPLACE WORN GUIDES OR REAM TO OVERSIZE. REPLACE VALVE SPRINGS AND SEALS. INSPECT AND/OR REPLACE VALVE ROTATORS. FREE-UP HEAT RISER VALVE IF USED. CHECK RADIATOR FOR LEAKS AND CLEAN. REASSEMBLE, CHANGE OIL AND FILTER, HEAT ENGINE TO OPERATING TEMPERATURE, RETORQUE HEAD AND READJUST VALVES PERFORM MAJOR TUNE-UP.

S20-30A	S25-35XL	S30-50C	S30-60ES	S40-60XL	S60-100E	S60-100B	S70-120XL	S125-150A	S25-40XM	S45-65XM	S135-155XL	
8	8	8	6	8	7	10	11	10	11.5	11.5	14.5	
H20-30E	H25-35XL	H30-60F/H	H40-60H/J	H40-60XL	H60-90C	H60-110E	H70-110XL	H110-150F	H135-155XL	H150-250E	H150-275H	H25-40XM
8	8	8	8	8	10	8	11	8	12	12*	12*	12
H45-65XM	H165-280XL	H300-360XL	H300-350B	KE	P40-50A	P60-80A						
12	17.5	17.5	15.5	8	8	8						

* PLUS 2 IF AIR BRAKES

NOTES

COOLING SYSTEM

JOB DESCRIPTION	JOB CODE
OVERHAUL COOLING SYSTEM	BA
REPLACE COOLANT THERMOSTAT	BB
REPLACE WATER PUMPS	BC
REPLACE COOLANT HOSES - UPPER AND LOWER	BD
REPLACE RADIATOR	BH
REPLACE FAN BELTS	BJ
REBUILD FAN DRIVE	BK

BA - OVERHAUL COOLING SYSTEM

INCLUDES LABOR TO REMOVE, CLEAN AND REPAIR OR REPLACE RADIATOR, REBUILD OR REPLACE WATER PUMP, AND REPLACE THERMOSTAT, BELTS AND HOSES.

S20-30A	S25-35XL	S30-50C	S30-60ES	S40-60XL	S60-100E	S60-100B	S70-120XL	S125-150A	S25-40XM	S45-65XM	S135-155XL	
5	5	5	7	5	7	5	6	5.5	6	6	12	
H20-30E	H25-35XL	H30-60F/H	H40-60H/J	H40-60XL	H60-90C	H60-110E	H70-110XL	H110-150F	H135-155XL	H150-250E	H150-275H	H25-40XM
9	5	5	7	4	4	6	6	6	12	5	5	6
H45-65XM	H165-280XL	H300-360XL	H300-350B	KE	P40-50A	P60-80A						
6	7.5	7.5	8	4	4	4						

BB - REPLACE COOLANT THERMOSTAT

DOES NOT PROVIDE FOR REMOVAL OF BROKEN STUDS OR REPLACEMENT OF BRACKETS.

S20-30A	S25-35XL	S30-50C	S30-60ES	S40-60XL	S60-100E	S60-100B	S70-120XL	S125-150A	S25-40XM	S45-65XM	S135-155XL	
1	1	1	1	1	1	1	1	1	1	1	1	
H20-30E	H25-35XL	H30-60F/H	H40-60H/J	H40-60XL	H60-90C	H60-110E	H70-110XL	H110-150F	H135-155XL	H150-250E	H150-275H	H25-40XM
1	1	1	1	1	1	1	1	1	1	1	1	1
H45-65XM	H165-280XL	H300-360XL	H300-350B	KE	P40-50A	P60-80A						
1	1	1	1	1	1	1						

BC - REPLACE WATER PUMP

INCLUDES LABOR TO REPLACE PUMP, HOSES, BELTS AND ANTI-FREEZE

S20-30A	S25-35XL	S30-50C	S30-60ES	S40-60XL	S60-100E	S60-100B	S70-120XL	S125-150A	S25-40XM	S45-65XM	S135-155XL	
2	3	2	3	3	3	3	4	2.5	4	4	4	
H20-30E	H25-35XL	H30-60F/H	H40-60H/J	H40-60XL	H60-90C	H60-110E	H70-110XL	H110-150F	H135-155XL	H150-250E	H150-275H	H25-40XM
3	3	3	3	3	2	3	4	4	4	3	3	3.5
H45-65XM	H165-280XL	H300-360XL	H300-350B	KE	P40-50A	P60-80A						
3.5	4.5	4.5	4.5	2	3	2						

BD - REPLACE COOLANT HOSES - UPPER AND LOWER

S20-30A	S25-35XL	S30-50C	S30-60ES	S40-60XL	S60-100E	S60-100B	S70-120XL	S125-150A	S25-40XM	S45-65XM	S135-155XL	
2	1.5	1	1.5	1.5	1.5	1	1.5	1.5	1.5	1.5	1.5	
H20-30E	H25-35XL	H30-60F/H	H40-60H/J	H40-60XL	H60-90C	H60-110E	H70-110XL	H110-150F	H135-155XL	H150-250E	H150-275H	H25-40XM
2	1.5	1.5	1.5	1.5	1	1	1.5	1	1	1.5	1.5	1.5
H45-65XM	H165-280XL	H300-360XL	H300-350B	KE	P40-50A	P60-80A						
1.5	1.5	1.5	1.5	1	1	1						

BH - REPLACE RADIATOR

INLCUDES LABOR TO REMOVE AND REPLACE RADIATOR, HOSES, BELTS AND ANTI-FREEZE. DOES NOT INCLUDE RADIATOR CLEAN AND REPAIR.

S20-30A	**S25-35XL**	**S30-50C**	**S30-60ES**	**S40-60XL**	**S60-100E**	**S60-100B**	**S70-120XL**	**S125-150A**	**S25-40XM**	**S45-65XM**	**S135-155XL**	
3	3	3	4	3	4	3	4	3	3.5	3.5	4.5	
H20-30E	**H25-35XL**	**H30-60F/H**	**H40-60H/J**	**H40-60XL**	**H60-90C**	**H60-110E**	**H70-110XL**	**H110-150F**	**H135-155XL**	**H150-250E**	**H150-275H**	**H25-40XM**
3	3	2	2	2	2	3	4	3	4	3	3	3.5
H45-65XM	**H165-280XL**	**H300-360XL**	**H300-350B**	**KE**	**P40-50A**	**P60-80A**						
3.5	4.5	4.5	4.5	3	2	2						

BJ - REPLACE FAN BELTS

S20-30A	**S25-35XL**	**S30-50C**	**S30-60ES**	**S40-60XL**	**S60-100E**	**S60-100B**	**S70-120XL**	**S125-150A**	**S25-40XM**	**S45-65XM**	**S135-155XL**	
1	1.5	1	1.5	1.5	1.5	1	1.5	1.5	1.5	1.5	1.5	
H20-30E	**H25-35XL**	**H30-60F/H**	**H40-60H/J**	**H40-60XL**	**H60-90C**	**H60-110E**	**H70-110XL**	**H110-150F**	**H135-155XL**	**H150-250E**	**H150-275H**	**H25-40XM**
1	1.5	1	1	1.5	1	1.5	1	1.5	1.5	2	2	1.5
H45-65XM	**H165-280XL**	**H300-360XL**	**H300-350B**	**KE**	**P40-50A**	**P60-80A**						
1.5	2.5	2.5	2.5	1.5	1.5	1.5						

BK - REBUILD FAN DRIVE

REFERS TO UNITS THAT DO NOT HAVE THE FAN BLADE MOUNTED TO THE WATER PUMP. INCLUDES ALL LABOR TO REBUILD FEAR BOX DRIVE OR BELT AND SHAFT DRIVES.

S20-30A	**S25-35XL**	**S30-50C**	**S30-60ES**	**S40-60XL**	**S60-100E**	**S60-100B**	**S70-120XL**	**S125-150A**	**S25-40XM**	**S45-65XM**	**S135-155XL**	
NA	3	NA	5	3	5	NA	3.5	NA	3	3	3.5	
H20-30E	**H25-35XL**	**H30-60F/H**	**H40-60H/J**	**H40-60XL**	**H60-90C**	**H60-110E**	**H70-110XL**	**H110-150F**	**H135-155XL**	**H150-250E**	**H150-275H**	**H25-40XM**
3	3	NA	1	NA	NA	5	3	1	3.5	NA	NA	3
H45-65XM	**H165-280XL**	**H300-360XL**	**H300-350B**	**KE**	**P40-50A**	**P60-80A**						
3	3	3	NA	NA	NA	NA						

NOTES

CLUTCH

JOB DESCRIPTION	JOB CODE
CLUTCH OVERHAUL	CA
RESEAL CLUTCH HOUSING	CB
RESEAL HYDRAULIC CLUTCH BOOSTER	CC
CONVERT TO MECHANICAL LINKAGE	CD
ADJUST CLUTCH	CF
REPLACE JET PUMP	CL

CA - CLUTCH OVERHAUL

INCLUDES ALL LABOR TO REPLACE DRIVEN PLATE, COVER ASSEMBLY, THROW-OUT BEARING, PILOT BEARING, CROSS SHAFT BUSHINGS AND SEALS, YOKE AND FLYWHEEL SEAL.

S20-30A	**S25-35XL**	**S30-50C**	**S30-60ES**	**S40-60XL**	**S60-100E**	**S60-100B**	**S70-120XL**	**S125-150A**	**S25-40XM**	**S45-65XM**	**S135-155XL**	
5	NA	6	20	NA	20	6	NA	7	NA	NA	16	
H20-30E	**H25-35XL**	**H30-60F/H**	**H40-60H/J**	**H40-60XL**	**H60-90C**	**H60-110E**	**H70-110XL**	**H110-150F**	**H135-155XL**	**H150-250E**	**H150-275H**	**H25-40XM**
5	NA	18	20	NA	4.5	6	10	6	10	10	10	NA
H45-65XM	**H165-280XL**	**H300-360XL**	**H300-350B**	**KE**	**P40-50A**	**P60-80A**						
NA	NA	NA	14	5	6	6						

CB - RESEAL CLUTCH HOUSING

INLUDES ALL GASKETS, CROSS SHAFT SEALS AND FLYWHEEL SEAL.

S20-30A	**S25-35XL**	**S30-50C**	**S30-60ES**	**S40-60XL**	**S60-100E**	**S60-100B**	**S70-120XL**	**S125-150A**	**S25-40XM**	**S45-65XM**	**S135-155XL**	
NA	NA	4	15	NA	15	4	NA	5	NA	NA	13.5	
H20-30E	**H25-35XL**	**H30-60F/H**	**H40-60H/J**	**H40-60XL**	**H60-90C**	**H60-110E**	**H70-110XL**	**H110-150F**	**H135-155XL**	**H150-250E**	**H150-275H**	**H25-40XM**
NA	NA	15	15	NA	4	5	10	5	10	9	9	NA
H45-65XM	**H165-280XL**	**H300-360XL**	**H300-350B**	**KE**	**P40-50A**	**P60-80A**						
NA	NA	NA	12.5	NA	5	5						

CC- RESEAL HYDRUALIC CLUTCH BOOSTER

S20-30A	**S25-35XL**	**S30-50C**	**S30-60ES**	**S40-60XL**	**S60-100E**	**S60-100B**	**S70-120XL**	**S125-150A**	**S25-40XM**	**S45-65XM**	**S135-155XL**	
NA	NA	3	NA	NA	NA	3	NA	3	NA	NA	NA	
H20-30E	**H25-35XL**	**H30-60F/H**	**H40-60H/J**	**H40-60XL**	**H60-90C**	**H60-110E**	**H70-110XL**	**H110-150F**	**H135-155XL**	**H150-250E**	**H150-275H**	**H25-40XM**
NA	NA	3	NA	NA	3	NA	NA	3	NA	3	NA	NA
H45-65XM	**H165-280XL**	**H300-360XL**	**H300-350B**	**KE**	**P40-50A**	**P60-80A**						
NA	NA	NA	NA	NA	NA	3						

CD - CONVERT TO MECHANICAL LINKAGE

S20-30A	**S25-35XL**	**S30-50C**	**S30-60ES**	**S40-60XL**	**S60-100E**	**S60-100B**	**S70-120XL**	**S125-150A**	**S25-40XM**	**S45-65XM**	**S135-155XL**	
NA	NA	8	NA	NA	NA	8	NA	8	NA	NA	NA	
H20-30E	**H25-35XL**	**H30-60F/H**	**H40-60H/J**	**H40-60XL**	**H60-90C**	**H60-110E**	**H70-110XL**	**H110-150F**	**H135-155XL**	**H150-250E**	**H150-275H**	**H25-40XM**
NA	NA	8	NA	NA	8	NA	8	8	8	8	NA	NA
H45-65XM	**H165-280XL**	**H300-360XL**	**H300-350B**	**KE**	**P40-50A**	**P60-80A**						
NA	NA	NA	NA	NA	NA	8						

CF - ADJUST CLUTCH

S20-30A	S25-35XL	S30-50C	S30-60ES	S40-60XL	S60-100E	S60-100B	S70-120XL	S125-150A	S25-40XM	S45-65XM	S135-155XL	
1	1	1	1	1	1	1	1	1	NA	NA	1	
H20-30E	H25-35XL	H30-60F/H	H40-60H/J	H40-60XL	H60-90C	H60-110E	H70-110XL	H110-150F	H135-155XL	H150-250E	H150-275H	H25-40XM
1	1	1	1	1	1	1	1	1	1	1	1	NA
H45-65XM	H165-280XL	H300-360XL	H300-350B	KE	P40-50A	P60-80A						
NA	NA	NA	1	1	1	1						

CL - REPLACE JET PUMP

S20-30A	S25-35XL	S30-50C	S30-60ES	S40-60XL	S60-100E	S60-100B	S70-120XL	S125-150A	S25-40XM	S45-65XM	S135-155XL	
NA	NA	NA	NA	NA	NA	NA	NA	NA	NA	NA	NA	
H20-30E	H25-35XL	H30-60F/H	H40-60H/J	H40-60XL	H60-90C	H60-110E	H70-110XL	H110-150F	H135-155XL	H150-250E	H150-275H	H25-40XM
NA	NA	NA	NA	NA	NA	NA	3	NA	3	1.5	1.5	NA
H45-65XM	H165-280XL	H300-360XL	H300-350B	KE	P40-50A	P60-80A						
NA	NA	NA	3	NA	NA	NA						

NOTES

TRANSMISSION

JOB DESCRIPTION	JOB CODE
STANDARD TRANSMISSION OVERHAUL	DA
POWERSHIFT TRANSMISSION OVERHAUL	DA
OVERHAUL DRIVE AXLE	DB
REPAIR DIFFERENTIAL	DC
REBUILD FORWARD/REVERSE CLUTCH PACK	DD
REPLACE DIFFERENTIAL	DE
REPLACE CONVERTER	DH
REPLACE TRANSMISSION PUMP	DI
RESEAL TRANSMISSION PAN - POWERSHIFT	DN
REPLACE TRANSMISSION FLUID AND FILTER	DP
ADJUST INCHING PEDAL	DR
REBUILD TRANSMISSION CONTROL VALVE	DS
REBUILD SPEED REDUCER	DT
REBUILD SPEED REDUCER AND DIFFERENTIAL	DT
REPLACE UNIVERSAL JOINTS	DU
REPLACE DRIVE AXLE WHEEL SEALS - (ONE SIDE)	DV
RESEAL AXLE TUBES	DW
REPLACE AXLE SHAFT - (ONE SIDE)	DX

DA - STANDARD TRANSMISSION OVERHAUL

INCLUDES LABOR TO REMOVE, DISASSEMBLE, INSPECT, REPLACE ALL NECESSARY GEARS, SHAFTS, BEARINGS AND SEALS. INCLUDES PINION SHAFT SEAL REPLACEMENT AND RING GEAR AND PINION ADJUSTMENTS ON UNITS WITH PINION GEAR LOCATED IN THE TRANSMISSION CASE. INSTALL TRANSMISSION AND ADJUST SHIFT LINKAGE.

	S20-30A	S25-35XL	S30-50C	S30-60ES	S40-60XL	S60-100E	S60-100B	S70-120XL	S125-150A	S25-40XM	S45-65XM	S135-155XL	
	25	NA	25	32	NA	32	30	NA	22	NA	NA	31	
*	16	NA	16	18	NA	18	18	NA	8	NA	NA	18	
	H20-30E	**H25-35XL**	**H30-60F/H**	**H40-60H/J**	**H40-60XL**	**H60-90C**	**H60-110E**	**H70-110XL**	**H110-150F**	**H135-155XL**	**H150-250E**	**H150-275H**	**H25-40XM**
	25	NA	30	30	NA	9	32	29	10	29	20	20	NA
*	16	NA	16	16	NA	6	18	18	7	18	12	12	NA
	H45-65XM	**H165-280XL**	**H300-360XL**	**H300-350B**	**KE**	**P40-50A**	**P60-80A**						
	NA	NA	NA	27	9	9	9						
*	NA	NA	NA	18	6	6	6						

* BENCH JOB. (ADD 2 HRS. IF REPLACING REAR CRANKSHAFT SEAL)

DA - POWERSHIFT TRANSMISSION OVERHAUL

INCLUDES LABOR TO REMOVE, DISASSEMBLE, INSPECT, REPLACE ALL NECESSARY GEARS, SHAFTS, BEARINGS, FRICTION DISCS AND SEPARATOR PLATES. REPLACE ALL SEALS AND GASKETS. RESEAL CONTROL VALVE AND INSTALL NEW SPRINGS. INCLUDES PINION SHAFT SEAL REPLACEMENT AND RING GEAR AND PINION ADJUSTMENTS ON UNITS WITH PINION GEAR LOCATED IN TRANSMISSION CASE. INSTALL TRANSMISSION, ADJUST CONTROL VALVE PRESSURES, ADJUST INCHING AND SHIFT LINKAGES.

	S20-30A	S25-35XL	S30-50C	S30-60ES	S40-60XL	S60-100E	S60-100B	S70-120XL	S125-150A	S25-40XM	S45-65XM	S135-155XL	
	25	25	30	30	25	30	30	30	30	27	27	33	
*	20	16	20	16	16	16	20	20	16	16	16	20	
	H20-30E	**H25-35XL**	**H30-60F/H**	**H40-60H/J**	**H40-60XL**	**H60-90C**	**H60-110E**	**H70-110XL**	**H110-150F**	**H135-155XL**	**H150-250E**	**H150-275H**	**H25-40XM**
	35	25	25	25	25	30	25	30	30	30	46	46	27
*	20	16	12	12	16	20	12	20	16	20	30	30	16
	H45-65XM	**H165-280XL**	**H300-360XL**	**H300-350B**	**KE**	**P40-50A**	**P60-80A**						
	27	49	49	47	NA	NA	NA						
*	16	34	34	32	NA	NA	NA						

* BENCH JOB. (ADD 2 HRS. IF REPLACING REAR CRANKSHAFT SEAL)

DB - OVERHAUL DRIVE AXLE

INCLUDES LABOR TO REMOVE WHEELS, HUBS, SPINDLES, GEARS, BEARINGS AND SEALS, INSPECT AND REPLACE AS NECESSARY. REMOVE RING GEAR, PINION AND DIFFERENTIAL, INSPECT, REPLACE PARTS AS NECESSARY, MAKE ALL ADJUSTMENTS. INCLUDES TIME TO REPLACE AXLE TUBE BUSHINGS AND SEALS.

S20-30A	S25-35XL	S30-50C	S30-60ES	S40-60XL	S60-100E	S60-100B	S70-120XL	S125-150A	S25-40XM	S45-65XM	S135-155XL	
33	30	40	29	30	31	40	33	34	30	30	35	
H20-30E	**H25-35XL**	**H30-60F/H**	**H40-60H/J**	**H40-60XL**	**H60-90C**	**H60-110E**	**H70-110XL**	**H110-150F**	**H135-155XL**	**H150-250E**	**H150-275H**	**H25-40XM**
29	30	29	29	30	32	34	34	31	34	32	32	30
H45-65XM	**H165-280XL**	**H300-360XL**	**H300-350B**	**KE**	**P40-50A**	**P60-80A**						
30	35	35	35	27	28	28						

DC - REPAIR DIFFERENTIAL

INCLUDES ALL LABOR TO REMOVE DIFFERENTIAL CASE FROM TRANSMISSION OR DIFFERENTIAL HOUSING, DISASSEMBLE, INSPECT PINION AND SIDE GEARS, THRUST WASHERS AND CROSS SHAFTS AND REPLACE NECESSARY PARTS. REASSEMBLE AND MAKE ADJUSTMENTS TO RING GEAR AND PINION IF APPLICABLE AND INSTALL.

S20-30A	**S25-35XL**	**S30-50C**	**S30-60ES**	**S40-60XL**	**S60-100E**	**S60-100B**	**S70-120XL**	**S125-150A**	**S25-40XM**	**S45-65XM**	**S135-155XL**	
25	30	35	40	30	40	24	32	30	30	30	32	
H20-30E	**H25-35XL**	**H30-60F/H**	**H40-60H/J**	**H40-60XL**	**H60-90C**	**H60-110E**	**H70-110XL**	**H110-150F**	**H135-155XL**	**H150-250E**	**H150-275H**	**H25-40XM**
25	30	30	30	30	16	30	32	30	32	26	26	30
H45-65XM	**H165-280XL**	**H300-360XL**	**H300-350B**	**KE**	**P40-50A**	**P60-80A**						
30	33	33	33	30	16	18						

DD- REBUILD FORWARD/REVERSE/ CLUTCH PACK

INCLUDES LABOR TO REMOVE TRANSMISSION TOP COVER, CLUTCH PACK ASSEMBLY, DISASSEMBLE, REPLACE SEALS AND WORN PARTS, REASSEMBLE, CHECK AND ADJUST PRESSURES AND INCHING LINKAGE.

	S20-30A	**S25-35XL**	**S30-50C**	**S30-60ES**	**S40-60XL**	**S60-100E**	**S60-100B**	**S70-120XL**	**S125-150A**	**S25-40XM**	**S45-65XM**	**S135-155XL**	
	NA	NA	9	NA	NA	NA	9	NA	NA	NA	NA	NA	
*	NA	NA	4	NA	NA	NA	4	NA	NA				
	H20-30E	**H25-35XL**	**H30-60F/H**	**H40-60H/J**	**H40-60XL**	**H60-90C**	**H60-110E**	**H70-110XL**	**H110-150F**	**H135-155XL**	**H150-250E**	**H150-275H**	**H25-40XM**
	NA	NA	NA	NA	NA	NA	NA	NA	NA	NA	NA	NA	NA
*	NA	NA	NA	NA	NA	NA	NA	NA	NA	NA	NA	NA	NA
	H45-65XM	**H165-280XL**	**H300-360XL**	**H300-350B**	**KE**	**P40-50A**	**P60-80A**						
	NA	NA	NA	NA	NA	NA	NA						
*	NA	NA	NA	NA	NA	NA	NA						

* BENCH JOB

DE - REPLACE DIFFERENTIAL

INCLUDES ALL LABOR TO REPLACE DIFFERENTIAL WITH NEW OR REBUILT PART AND ADJUST RING GEAR AND PINION IF APPLICABLE.

S20-30A	**S25-35XL**	**S30-50C**	**S30-60ES**	**S40-60XL**	**S60-100E**	**S60-100B**	**S70-120XL**	**S125-150A**	**S25-40XM**	**S45-65XM**	**S135-155XL**	
31	27	33	35	28	35	34	30	23	29	29	30	
H20-30E	**H25-35XL**	**H30-60F/H**	**H40-60H/J**	**H40-60XL**	**H60-90C**	**H60-110E**	**H70-110XL**	**H110-150F**	**H135-155XL**	**H150-250E**	**H150-275H**	**H25-40XM**
20	27	31	32	28	14	23	30	20	30	20	20	29
H45-65XM	**H165-280XL**	**H300-360XL**	**H300-350B**	**KE**	**P40-50A**	**P60-80A**						
29	28	28	28	18	15	15						

DH - REPLACE CONVERTER

INCLUDES ALL LABOR TO GAIN ACCESS TO CONVERTER AND REPLACE TRANSMISSION PUMP ON UNITS THAT USED THE CONVERTER HUB TO DRIVE THE PUMP.

S20-30A	**S25-35XL**	**S30-50C**	**S30-60ES**	**S40-60XL**	**S60-100E**	**S60-100B**	**S70-120XL**	**S125-150A**	**S25-40XM**	**S45-65XM**	**S135-155XL**	
13	14	12	20	14	20	12	16	12	16	16	17	
H20-30E	**H25-35XL**	**H30-60F/H**	**H40-60H/J**	**H40-60XL**	**H60-90C**	**H60-110E**	**H70-110XL**	**H110-150F**	**H135-155XL**	**H150-250E**	**H150-275H**	**H25-40XM**
13	14	18	18	14	12	14	16	13	17	18	18	16
H45-65XM	**H165-280XL**	**H300-360XL**	**H300-350B**	**KE**	**P40-50A**	**P60-80A**						
18	18	18	18	NA	NA	NA						

(ADD 2 HRS. IF REPLACING REAR CRANKSHAFT SEAL)

DI - REPLACE TRANSMISSION PUMP

S20-30A	S25-35XL	S30-50C	S30-60ES	S40-60XL	S60-100E	S60-100B	S70-120XL	S125-150A	S25-40XM	S45-65XM	S135-155XL	
13	12	13	3	12	3	13	14	12	14	14	15	
H20-30E	H25-35XL	H30-60F/H	H40-60H/J	H40-60XL	H60-90C	H60-110E	H70-110XL	H110-150F	H135-155XL	H150-250E	H150-275H	H25-40XM
13	12	NA	NA	13	12	3	14	13	14	3	3	14
H45-65XM	H165-280XL	H300-360XL	H300-350B	KE	P40-50A	P60-80A						
14	4	4	4	NA	NA	NA						

DN - RESEAL TRANSMISSION PAN - POWERSHIFT

CHANGE FLUID AND FILTER

S20-30A	S25-35XL	S30-50C	S30-60ES	S40-60XL	S60-100E	S60-100B	S70-120XL	S125-150A	S25-40XM	S45-65XM	S135-155XL	
NA	NA	2	2	NA	2	2	NA	NA	NA	NA	NA	
H20-30E	H25-35XL	H30-60F/H	H40-60H/J	H40-60XL	H60-90C	H60-110E	H70-110XL	H110-150F	H135-155XL	H150-250E	H150-275H	H25-40XM
NA	NA	NA	NA	NA	NA	1.5	NA	NA	NA	3	3	NA
H45-65XM	H165-280XL	H300-360XL	H300-350B	KE	P40-50A	P60-80A						
NA	NA	NA	3	NA	NA	NA						

DP - REPLACE TRANSMISSION FLUID AND FILTER

S20-30A	S25-35XL	S30-50C	S30-60ES	S40-60XL	S60-100E	S60-100B	S70-120XL	S125-150A	S25-40XM	S45-65XM	S135-155XL	
1.5	1.5	1.5	2	1.5	2	1.5	1.5	1.5	1.5	1.5	1.5	
H20-30E	H25-35XL	H30-60F/H	H40-60H/J	H40-60XL	H60-90C	H60-110E	H70-110XL	H110-150F	H135-155XL	H150-250E	H150-275H	H25-40XM
1.5	1.5	1.5	1.5	1.5	1.5	1.5	1.5	1.5	1.5	2	2	1.5
H45-65XM	H165-280XL	H300-360XL	H300-350B	KE	P40-50A	P60-80A						
1.5	2	2	2	NA	NA	NA						

DR - ADJUST INCHING PEDAL

S20-30A	S25-35XL	S30-50C	S30-60ES	S40-60XL	S60-100E	S60-100B	S70-120XL	S125-150A	S25-40XM	S45-65XM	S135-155XL	
1.5	2	1.5	NA	2	NA	1.5	2	1.5	1.5	1.5	2	
H20-30E	H25-35XL	H30-60F/H	H40-60H/J	H40-60XL	H60-90C	H60-110E	H70-110XL	H110-150F	H135-155XL	H150-250E	H150-275H	H25-40XM
1.5	2	NA	NA	2	1.5	NA	2	1.5	2	1.5	1.5	1.5
H45-65XM	H165-280XL	H300-360XL	H300-350B	KE	P40-50A	P60-80A						
1.5	2	2	2	NA	NA	NA						

DS - REBUILD TRANSMISSION CONTROL VALVE

INCLUDES LABOR TO REMOVE, DISASSEMBLE, INSPECT, REPLACE WORN OR DAMAGED PARTS, REPLACE SPRINGS, INSTALL AND ADJUST PRESSURES AND INCHING CONTROLS

S20-30A	S25-35XL	S30-50C	S30-60ES	S40-60XL	S60-100E	S60-100B	S70-120XL	S125-150A	S25-40XM	S45-65XM	S135-155XL	
5	4	5	6	4	6	6	6	6	4.5	4.5	6	
H20-30E	H25-35XL	H30-60F/H	H40-60H/J	H40-60XL	H60-90C	H60-110E	H70-110XL	H110-150F	H135-155XL	H150-250E	H150-275H	H25-40XM
6	4	6	6	4	6	6	6	6	6	6	6	4.5
H45-65XM	H165-280XL	H300-360XL	H300-350B	KE	P40-50A	P60-80A						
4.5	6	6	6	NA	NA	NA						

DT - REBUILD SPEED REDUCER

INCLUDES LABOR TO REMOVE, DISASSEMBLE, INSPECT, REPLACE NEEDED PARTS, ADJUST BEARINGS AND FORK AND INSTALL.

S20-30A	S25-35XL	S30-50C	S30-60ES	S40-60XL	S60-100E	S60-100B	S70-120XL	S125-150A	S25-40XM	S45-65XM	S135-155XL	
NA	NA	NA	NA	NA	NA	NA	NA	12	NA	NA	NA	
H20-30E	H25-35XL	H30-60F/H	H40-60H/J	H40-60XL	H60-90C	H60-110E	H70-110XL	H110-150F	H135-155XL	H150-250E	H150-275H	H25-40XM
NA	NA	NA	NA	NA	20	NA	NA	12	NA	20	20	NA
H45-65XM	H165-280XL	H300-360XL	H300-350B	KE	P40-50A	P60-80A						
NA	NA	NA	18	15	10	10						

DT - REBUILD SPEED REDUCER AND DIFFERENTIAL

REMOVE SPEED REDUCER AND DIFFERENTIAL ASSEMBLY AS A UNIT, DISASSEMBLE, INSPECT, REPLACE NEEDED PARTS AND INSTALL. INCLUDES RING GEAR CARRIER, BEARINGS ADJUSTMENT AND RING GEAR AND PINION ADJUSTMENTS.

S20-30A	S25-35XL	S30-50C	S30-60ES	S40-60XL	S60-100E	S60-100B	S70-120XL	S125-150A	S25-40XM	S45-65XM	S135-155XL	
NA	NA	NA	NA	NA	NA	NA	NA	15	NA	NA	NA	
H20-30E	H25-35XL	H30-60F/H	H40-60H/J	H40-60XL	H60-90C	H60-110E	H70-110XL	H110-150F	H135-155XL	H150-250E	H150-275H	H25-40XM
NA	NA	NA	NA	NA	20	12	24	15	24	15	15	NA
H45-65XM	H165-280XL	H300-360XL	H300-350B	KE	P40-50A	P60-80A						
NA	NA	NA	22	15	12	12						

DU - REPLACE UNIVERSAL JOINTS

S20-30A	S25-35XL	S30-50C	S30-60ES	S40-60XL	S60-100E	S60-100B	S70-120XL	S125-150A	S25-40XM	S45-65XM	S135-155XL	
NA	NA	NA	NA	NA	NA	NA	2	1.5	NA	NA	2	
H20-30E	H25-35XL	H30-60F/H	H40-60H/J	H40-60XL	H60-90C	H60-110E	H70-110XL	H110-150F	H135-155XL	H150-250E	H150-275H	H25-40XM
NA	NA	NA	NA	NA	1	1.5	2	1	2	1.5	1.5	NA
H45-65XM	H165-280XL	H300-360XL	H300-350B	KE	P40-50A	P60-80A						
NA	2	2	2	1	1	1.5						

DV - REPLACE DRIVE AXLE WHEEL SEALS (ONE SIDE)

INCLUDES REPLACING OIL SOAKED BRAKE SHOES

S20-30A	S25-35XL	S30-50C	S30-60ES	S40-60XL	S60-100E	S60-100B	S70-120XL	S125-150A	S25-40XM	S45-65XM	S135-155XL	
3	3	3	3	3	3	5	4	5	3	3	4	
H20-30E	H25-35XL	H30-60F/H	H40-60H/J	H40-60XL	H60-90C	H60-110E	H70-110XL	H110-150F	H135-155XL	H150-250E	H150-275H	H25-40XM
3	3	3	3	3	3	3	4	3	4	5	5	3
H45-65XM	H165-280XL	H300-360XL	H300-350B	KE	P40-50A	P60-80A						
3	4.5	4.5	4.5	5	3	3						

DW - RESEAL AXLE TUBES

INCLUDES LABOR TO REPLACE BUSHINGS, SEALS, SIDE PLATES AND MAKE ADJUSTMENTS.

S20-30A	S25-35XL	S30-50C	S30-60ES	S40-60XL	S60-100E	S60-100B	S70-120XL	S125-150A	S25-40XM	S45-65XM	S135-155XL	
16	16	16	16	16	16	18	17	NA	16	16	17	
H20-30E	H25-35XL	H30-60F/H	H40-60H/J	H40-60XL	H60-90C	H60-110E	H70-110XL	H110-150F	H135-155XL	H150-250E	H150-275H	H25-40XM
16	16	NA	NA	NA	NA	NA	17	NA	18	NA	NA	16
H45-65XM	H165-280XL	H300-360XL	H300-350B	KE	P40-50A	P60-80A						
16	NA	NA	NA	NA	NA	NA						

DX - REPLACE AXLE SHAFT (ONE SIDE)

S20-30A	S25-35XL	S30-50C	S30-60ES	S40-60XL	S60-100E	S60-100B	S70-120XL	S125-150A	S25-40XM	S45-65XM	S135-155XL	
1	1	3.5	3.5	1	3.5	3.5	1	1.5	1	1	1	
H20-30E	H25-35XL	H30-60F/H	H40-60H/J	H40-60XL	H60-90C	H60-110E	H70-110XL	H110-150F	H135-155XL	H150-250E	H150-275H	H25-40XM
1	1	1	1	1	1	1	1	1	1	1.5	1.5	1
H45-65XM	H165-280XL	H300-360XL	H300-350B	KE	P40-50A	P60-80A						
1	1.5	1.5	1.5	1	1	1						

HYDRAULIC SYSTEM

JOB DESCRIPTION	JOB CODE
RESEAL HYDRAULIC CONTROL VALVE	EA
REPLACE HYDRAULIC OIL AND FILTER	EC
REBUILD HYDRAULIC CONTROL VALVE LINKAGE (2-SPOOL)	EE
REPLACE HYDRAULIC OIL FILTER	EG
REPLACE MAIN HYDRAULIC PUMP	EH
CLEAN HYDRAULIC TANK	EK
REPAIR DRIVE SHAFT - MAIN HYDRAULIC PUMP	EL
RESEAL HOSE REEL	EM
RESEAL JUNCTION BLOCK	EN
REPLACE HEADER HOSES	EP
REPLACE TWO-SPEED HOIST VALVE	ER
REBUILD TILT CONTROL VALVE OR ANTI-CAVITATION SPOOL	ES

EA - RESEAL HYDRAULIC CONTROL VALVE

INCLUDES LABOR TO REMOVE, DISASSEMBLE, INSPECT, REPLACE SEALS, INSTALL AND ADJUST RELIEF PRESSURE

	S20-30A	S25-35XL	S30-50C	S30-60ES	S40-60XL	S60-100E	S60-100B	S70-120XL	S125-150A	S25-40XM	S45-65XM	S135-155XL	
+	2.5	4	2.5	5	4	5	2.5	4	1.5	4	4	5	
#	3	4	3	5	4	5	3	5	2.5	4	4	5	
&	4	5	4	5	5	5	4	5	2.5	5	5	6.5	
	H20-30E	H25-35XL	H30-60F/H	H40-60H/J	H40-60XL	H60-90C	H60-110E	H70-110XL	H110-150F	H135-155XL	H150-250E	H150-275H	H25-40XM
+	2.5	4	5.5	5	4	2	5	4	1.5	4	2.5	2.5	4
#	3	4	5.5	5.5	4	4	5	4	4	4	3	3	4
&	4	5	6.5	6	5	4.5	5	5	4.5	5	3.5	3.5	5
	H45-65XM	H165-280XL	H300-360XL	H300-350B	KE	P40-50A	P60-80A						
+	4	4.5	4.5	4.5	1.5	1.5	1.5						
#	4	4.5	4.5	4.5	NA	2.5	2.5						
&	5	6.5	6.5	6.5	NA	2.5	2.5						

\+ 2-W
\# 3-W
& 4-W

EC - REPLACE HYDRAULIC OIL AND FILTER

S20-30A	S25-35XL	S30-50C	S30-60ES	S40-60XL	S60-100E	S60-100B	S70-120XL	S125-150A	S25-40XM	S45-65XM	S135-155XL	
2.5	2.5	2.5	2.5	2.5	2.5	2.5	2.5	2.5	2.5	2.5	2.5	
H20-30E	H25-35XL	H30-60F/H	H40-60H/J	H40-60XL	H60-90C	H60-110E	H70-110XL	H110-150F	H135-155XL	H150-250E	H150-275H	H25-40XM
2.5	2.5	2.5	2.5	2.5	2.5	2.5	2.5	2.5	3	3	3	2.5
H45-65XM	H165-280XL	H300-360XL	H300-350B	KE	P40-50A	P60-80A						
2.5	3	3	3	2.5	2.5	2.5						

EE - REBUILD HYDRAULIC CONTROL VALVE LINKAGE (2-SPOOL)

INCLUDES LABOR TO DISASSEMBLE, INSPECT, REPLACE WORN PARTS, ASSEMBLE AND ADJUST.

S20-30A	S25-35XL	S30-50C	S30-60ES	S40-60XL	S60-100E	S60-100B	S70-120XL	S125-150A	S25-40XM	S45-65XM	S135-155XL	
3	2	2	2	2	2	2	2	2	2	2	3	
H20-30E	H25-35XL	H30-60F/H	H40-60H/J	H40-60XL	H60-90C	H60-110E	H70-110XL	H110-150F	H135-155XL	H150-250E	H150-275H	H25-40XM
3	2	2	2	2	2	2	2	2	2	2	2	2
H45-65XM	H165-280XL	H300-360XL	H300-350B	KE	P40-50A	P60-80A						
2	3	3	3	2	2	2						

EG - REPLACE HYDRAULIC OIL FILTER

S20-30A	S25-35XL	S30-50C	S30-60ES	S40-60XL	S60-100E	S60-100B	S70-120XL	S125-150A	S25-40XM	S45-65XM	S135-155XL	
1.5	1.5	1.5	1.5	1.5	1.5	1.5	1.5	1.5	1.5	1.5	1.5	
H20-30E	H25-35XL	H30-60F/H	H40-60H/J	H40-60XL	H60-90C	H60-110E	H70-110XL	H110-150F	H135-155XL	H150-250E	H150-275H	H25-40XM
1.5	1.5	1.5	1.5	1.5	1.5	1.5	1.5	1.5	1.5	1.5	1.5	1.5
H45-65XM	H165-280XL	H300-360XL	H300-350B	KE	P40-50A	P60-80A						
1.5	1.5	1.5	1.5	1.5	1.5	1.5						

EH - REPLACE MAIN HYDRAULIC PUMP

INCLUDES LABOR TO REPLACE PUMP AND ADJUST PRESSURES

S20-30A	S25-35XL	S30-50C	S30-60ES	S40-60XL	S60-100E	S60-100B	S70-120XL	S125-150A	S25-40XM	S45-65XM	S135-155XL	
3	3	3*	2.5	3	2.5	3*	3.5	4	3	3	4	
H20-30E	H25-35XL	H30-60F/H	H40-60H/J	H40-60XL	H60-90C	H60-110E	H70-110XL	H110-150F	H135-155XL	H150-250E	H150-275H	H25-40XM
3	3	2	2	2	3*	2.5	3.5	3	3.5	3	3	3
H45-65XM	H165-280XL	H300-360XL	H300-350B	KE	P40-50A	P60-80A						
3	4.5	4.5	4.5	2	2	2						

* PLUS 2 HOURS FOR DIESEL

EK - CLEAN HYDRAULIC TANK

INCLUDES REPLACE FILTER

S20-30A	S25-35XL	S30-50C	S30-60ES	S40-60XL	S60-100E	S60-100B	S70-120XL	S125-150A	S25-40XM	S45-65XM	S135-155XL	
3	3	3	3	3	3	3	3	3	3	3	3	
H20-30E	H25-35XL	H30-60F/H	H40-60H/J	H40-60XL	H60-90C	H60-110E	H70-110XL	H110-150F	H135-155XL	H150-250E	H150-275H	H25-40XM
3	3	3	3	3	3	3	3	3	3.5	3.5	3.5	3
H45-65XM	H165-280XL	H300-360XL	H300-350B	KE	P40-50A	P60-80A						
3	4	4	4	3	3	3						

EL - REPAIR DRIVE SHAFT - MAIN HYDRAULIC PUMP

S20-30A	S25-35XL	S30-50C	S30-60ES	S40-60XL	S60-100E	S60-100B	S70-120XL	S125-150A	S25-40XM	S45-65XM	S135-155XL	
NA	NA	NA	NA	NA	NA	NA	NA	NA	NA	NA	NA	
H20-30E	H25-35XL	H30-60F/H	H40-60H/J	H40-60XL	H60-90C	H60-110E	H70-110XL	H110-150F	H135-155XL	H150-250E	H150-275H	H25-40XM
NA	NA	NA	NA	NA	NA	NA	NA	4	4	4	4	NA
H45-65XM	H165-280XL	H300-360XL	H300-350B	KE	P40-50A	P60-80A						
NA	NA	NA	4	NA	4	4						

EM - RESEAL HOSE REEL

S20-30A	S25-35XL	S30-50C	S30-60ES	S40-60XL	S60-100E	S60-100B	S70-120XL	S125-150A	S25-40XM	S45-65XM	S135-155XL	
1.5	1.5	1.5	1.5	1.5	1.5	1.5	1.5	1.5	2	2	2	
H20-30E	H25-35XL	H30-60F/H	H40-60H/J	H40-60XL	H60-90C	H60-110E	H70-110XL	H110-150F	H135-155XL	H150-250E	H150-275H	H25-40XM
1.5	1.5	1.5	1.5	1.5	1.5	1.5	2	2	NA	NA	NA	2
H45-65XM	H165-280XL	H300-360XL	H300-350B	KE	P40-50A	P60-80A						
2	NA	NA	NA	NA	1.5	1.5						

EN - RESEAL JUNCTION BLOCK

S20-30A	S25-35XL	S30-50C	S30-60ES	S40-60XL	S60-100E	S60-100B	S70-120XL	S125-150A	S25-40XM	S45-65XM	S135-155XL	
1.5	1.5	1.5	1.5	1.5	1.5	1.5	1.5	1.5	1.5	1.5	1.5	
H20-30E	H25-35XL	H30-60F/H	H40-60H/J	H40-60XL	H60-90C	H60-110E	H70-110XL	H110-150F	H135-155XL	H150-250E	H150-275H	H25-40XM
1.5	1.5	1.5	1.5	1.5	1.5	1.1	1.5	1.5	NA	NA	NA	1.5
H45-65XM	H165-280XL	H300-360XL	H300-350B	KE	P40-50A	P60-80A						
1.5	NA	NA	NA	NA	1.5	1.5						

EP - REPLACE HEADER HOSE

S20-30A	S25-35XL	S30-50C	S30-60ES	S40-60XL	S60-100E	S60-100B	S70-120XL	S125-150A	S25-40XM	S45-65XM	S135-155XL	
2	2	2	2	2	2	2	2	2	2	2	2	
H20-30E	H25-35XL	H30-60F/H	H40-60H/J	H40-60XL	H60-90C	H60-110E	H70-110XL	H110-150F	H135-155XL	H150-250E	H150-275H	H25-40XM
2	2	2	2	2	2	2	2	2	NA	NA	NA	2
H45-65XM	H165-280XL	H300-360XL	H300-350B	KE	P40-50A	P60-80A						
2	3	3	3	NA	2	2						

ER - REPLACE TWO-SPEED HOIST VALVE

S20-30A	S25-35XL	S30-50C	S30-60ES	S40-60XL	S60-100E	S60-100B	S70-120XL	S125-150A	S25-40XM	S45-65XM	S135-155XL	
NA	NA	NA	NA	NA	NA	3	NA	3	NA	NA	NA	
H20-30E	H25-35XL	H30-60F/H	H40-60H/J	H40-60XL	H60-90C	H60-110E	H70-110XL	H110-150F	H135-155XL	H150-250E	H150-275H	H25-40XM
NA	NA	NA	NA	NA	3	3	NA	3	NA	3	3	NA
H45-65XM	H165-280XL	H300-360XL	H300-350B	KE	P40-50A	P60-80A						
NA	NA	NA	1.5	NA	NA	NA						

ES - REBUILD TILT CONTROL VALVE OR ANTI-CAVITATION SPOOL

INCLUDES LABOR TO REMOVE, DISASSEMBLE, INSPECT, REPLACE WORN PARTS AND SEALS, ASSEMBLE AND INSTALL

S20-30A	S25-35XL	S30-50C	S30-60ES	S40-60XL	S60-100E	S60-100B	S70-120XL	S125-150A	S25-40XM	S45-65XM	S135-155XL	
4	5	4	8	5	8	4	5	4	5	5	5	
H20-30E	H25-35XL	H30-60F/H	H40-60H/J	H40-60XL	H60-90C	H60-110E	H70-110XL	H110-150F	H135-155XL	H150-250E	H150-275H	H25-40XM
4	5	5	5	5	4	8	5	4	5	2	2	5
H45-65XM	H165-280XL	H300-360XL	H300-350B	KE	P40-50A	P60-80A						
5	5	5	5	2	1	1						

TILT CYLINDERS

JOB DESCRIPTION	JOB CODE
REPACK TILT CYLINDER (ONE)	FA
REPLACE TILT CYLINDERS (ONE)	FB

FA - REPACK CYLINDER (ONE)

S20-30A	S25-35XL	S30-50C	S30-60ES	S40-60XL	S60-100E	S60-100B	S70-120XL	S125-150A	S25-40XM	S45-65XM	S135-155XL	
2	2	2	2	2	2	2	2	2	2	2	2.5	
H20-30E	H25-35XL	H30-60F/H	H40-60H/J	H40-60XL	H60-90C	H60-110E	H70-110XL	H110-150F	H135-155XL	H150-250E	H150-275H	H25-40XM
2	2	2	2	2	2	2	2	2	2.5	2.5	2.5	2
H45-65XM	H165-280XL	H300-360XL	H300-350B	KE	P40-50A	P60-80A						
2	3	3	3	NA	2	2						

FB - REPLACE TILT CYLINDER (ONE)

S20-30A	S25-35XL	S30-50C	S30-60ES	S40-60XL	S60-100E	S60-100B	S70-120XL	S125-150A	S25-40XM	S45-65XM	S135-155XL	
2	1.5	1.5	1	1.5	1	1.5	1.5	1.5	1.5	1.5	2	
H20-30E	H25-35XL	H30-60F/H	H40-60H/J	H40-60XL	H60-90C	H60-110E	H70-110XL	H110-150F	H135-155XL	H150-250E	H150-275H	H25-40XM
2	1.5	1.5	1.5	1.5	1.5	1.5	1.5	1.5	2	2.5	2.5	1.5
H45-65XM	H165-280XL	H300-360XL	H300-350B	KE	P40-50A	P60-80A						
1.5	2	2	2	NA	1.5	1.5						

STEERING SYSTEM

JOB DESCRIPTION	JOB CODE
REBUILD STEERING AXLE	GA
REBUILD STEERING GEAR ASSEMBLY	GB
RESEAL STEERING HAND PUMP	GC
REPACK STEERING CYLINDER	GD
REPLACE STEERING DRAG LINK	GE
REPAIR STEERING DRAG LINK	GF
REPLACE BALL STUD	GG
REPLACE STEERING CYLINDER	GH
REPLACE STEERING TIE ROD - (EACH)	GI
REPLACE STEERING PUMP	GJ
ADJUST STEERING PRESSURE	GL
REPLACE STEERING FLOW DIVIDER	GM
REPLACE STEERING GEAR OR HAND PUMP	GN
REPLACE STEERING WHEEL	GR
REPLACE STEER AXLE SPINDLE (ONE SIDE)	GS
REPLACE KING PINS OR SPINDLE BEARINGS ONLY	GU
REPLACE CENTER ARM AND BEARINGS	GV
REPLACE STEERING SPINDLE HUB AND BEARINGS AND SEALS (BOTH SIDES)	GW

GA - REBUILD STEERING AXLE

INCLUDES LABOR TO REMOVE AXLE, DISASSEMBLE, REPLACE KING PINS AND BEARINGS, CENTER ARM PIN AND BEARINGS, SEALS, TIE ROD ENDS, BALL SEATS AND SPRINGS, FRAME MOUNT BUSHINGS OR MOUNTS, REPACK WHEEL BEARINGS AND MAKE ALL ADJUSTMENTS. DOES NOT INCLUDE STEER CYLINDER REPACK. INCLUDES TRUNNION REMOVAL, BEARING INSPECTION OR REPLACEMENT, LUBE, REASSEMBLE AND ADJUSTMENTS ON THREE-WHEEL UNITS. SEE **GU** FOR KING PINS AND BEARINGS ONLY.

S20-30A	S25-35XL	S30-50C	S30-60ES	S40-60XL	S60-100E	S60-100B	S70-120XL	S125-150A	S25-40XM	S45-65XM	S135-155XL	
10	9	8	11	9	11	8	10	11	8	8	10	
H20-30E	H25-35XL	H30-60F/H	H40-60H/J	H40-60XL	H60-90C	H60-110E	H70-110XL	H110-150F	H135-155XL	H150-250E	H150-275H	H25-40XM
10	9	8	8	8	8	10	10	8	10	12	8	8
H45-65XM	H165-280XL	H300-360XL	H300-350B	KE	P40-50A	P60-80A						
8	12	12	12	8	9	10						

GB - REBUILD STEERING GEAR

INCLUDES LABOR TO REMOVE ASSEMBLY, DISASSEMBLE, INSPECT, REPLACE ALL WORN PARTS, INSTALL ANE MAKE ALL ADJUSTMENTS.

S20-30A	S25-35XL	S30-50C	S30-60ES	S40-60XL	S60-100E	S60-100B	S70-120XL	S125-150A	S25-40XM	S45-65XM	S135-155XL	
3	4	3	NA	4	NA	5	5	NA	NA	NA	NA	
H20-30E	H25-35XL	H30-60F/H	H40-60H/J	H40-60XL	H60-90C	H60-110E	H70-110XL	H110-150F	H135-155XL	H150-250E	H150-275H	H25-40XM
3	4	NA	NA	NA	5	NA	5	5	5	5	NA	NA
H45-65XM	H165-280XL	H300-360XL	H300-350B	KE	P40-50A	P60-80A						
NA	NA	NA	NA	5	NA	NA						

GC - RESEAL STEERING HAND PUMP

INCLUDES LABOR TO REMOVE, DISASSEMBLE, INSPECT, REPLACE SEALS, REASSEMBLE AND INSTALL.

S20-30A	S25-35XL	S30-50C	S30-60ES	S40-60XL	S60-100E	S60-100B	S70-120XL	S125-150A	S25-40XM	S45-65XM	S135-155XL	
NA	3	NA	3	3	3	NA	3.5	3	3.5	3.5	3.5	
H20-30E	H25-35XL	H30-60F/H	H40-60H/J	H40-60XL	H60-90C	H60-110E	H70-110XL	H110-150F	H135-155XL	H150-250E	H150-275H	H25-40XM
NA	3	3	3	3	3.5	3	3.5	3.5	3.5	NA	3	3.5
H45-65XM	H165-280XL	H300-360XL	H300-350B	KE	P40-50A	P60-80A						
3.5	4	4	4	3	3	3						

GD - REPACK STEERING CYLINDER

INCLUDES LABOR TO REMOVE (IF NECESSARY), DISASSEMBLE, INSPECT, REPLACE ALL SEALS, REASSEMBLE, INSTALL AND MAKE ALL ADJUSTMENTS.

S20-30A	S25-35XL	S30-50C	S30-60ES	S40-60XL	S60-100E	S60-100B	S70-120XL	S125-150A	S25-40XM	S45-65XM	S135-155XL	
NA	4	NA	4	4	4	4	4	4	4	4	4.5	
H20-30E	H25-35XL	H30-60F/H	H40-60H/J	H40-60XL	H60-90C	H60-110E	H70-110XL	H110-150F	H135-155XL	H150-250E	H150-275H	H25-40XM
NA	4	4	4	4	4	4	4	4	4	4	4	4
H45-65XM	H165-280XL	H300-360XL	H300-350B	KE	P40-50A	P60-80A						
4	5	5	5	4	4	4						

GE - REPLACE STEERING DRAG LINK

S20-30A	S25-35XL	S30-50C	S30-60ES	S40-60XL	S60-100E	S60-100B	S70-120XL	S125-150A	S25-40XM	S45-65XM	S135-155XL	
2	NA	2	NA	NA	NA	2	NA	NA	NA	NA	NA	
H20-30E	H25-35XL	H30-60F/H	H40-60H/J	H40-60XL	H60-90C	H60-110E	H70-110XL	H110-150F	H135-155XL	H150-250E	H150-275H	H25-40XM
2	NA	NA	NA	NA	2	NA	NA	2	NA	2	NA	NA
H45-65XM	H165-280XL	H300-360XL	H300-350B	KE	P40-50A	P60-80A						
NA	NA	NA	NA	2	NA	NA						

GF - REPAIR STEERING DRAG LINK

S20-30A	S25-35XL	S30-50C	S30-60ES	S40-60XL	S60-100E	S60-100B	S70-120XL	S125-150A	S25-40XM	S45-65XM	S135-155XL	
3	NA	3	NA	NA	NA	3	NA	NA	NA	NA	NA	
H20-30E	H25-35XL	H30-60F/H	H40-60H/J	H40-60XL	H60-90C	H60-110E	H70-110XL	H110-150F	H135-155XL	H150-250E	H150-275H	H25-40XM
3	NA	NA	NA	NA	3	NA	NA	3	NA	3	NA	NA
H45-65XM	H165-280XL	H300-360XL	H300-350B	KE	P40-50A	P60-80A						
NA	NA	NA	NA	3	NA	NA						

GG- REPLACE BALL STUD

S20-30A	S25-35XL	S30-50C	S30-60ES	S40-60XL	S60-100E	S60-100B	S70-120XL	S125-150A	S25-40XM	S45-65XM	S135-155XL	
6	NA	5	NA	NA	NA	5	NA	NA	NA	NA	NA	
H20-30E	H25-35XL	H30-60F/H	H40-60H/J	H40-60XL	H60-90C	H60-110E	H70-110XL	H110-150F	H135-155XL	H150-250E	H150-275H	H25-40XM
6	NA	5	5	NA	5	NA	NA	5	NA	6	NA	NA
H45-65XM	H165-280XL	H300-360XL	H300-350B	KE	P40-50A	P60-80A						
NA	NA	NA	NA	6	NA	NA						

GH - REPLACE STEERING CYLINDER

INCLUDES LABOR TO REPLACE WITH NEW OR REBUILT CYLINDER AND MAKE ADJUSTMENTS.

S20-30A	S25-35XL	S30-50C	S30-60ES	S40-60XL	S60-100E	S60-100B	S70-120XL	S125-150A	S25-40XM	S45-65XM	S135-155XL	
NA	3	NA	3	3	3	3	3	3	3	3	4	
H20-30E	H25-35XL	H30-60F/H	H40-60H/J	H40-60XL	H60-90C	H60-110E	H70-110XL	H110-150F	H135-155XL	H150-250E	H150-275H	H25-40XM
NA	3	3	3	3	3	3	3.5	4	4	3	3	3
H45-65XM	H165-280XL	H300-360XL	H300-350B	KE	P40-50A	P60-80A						
3	4	4	4	3	3	3						

GI - REPLACE TIE ROD END OR CONNECTING LINK (EACH)

S20-30A	S25-35XL	S30-50C	S30-60ES	S40-60XL	S60-100E	S60-100B	S70-120XL	S125-150A	S25-40XM	S45-65XM	S135-155XL	
1	1	1	1	1	1	1	1	1	1	1	1	
H20-30E	H25-35XL	H30-60F/H	H40-60H/J	H40-60XL	H60-90C	H60-110E	H70-110XL	H110-150F	H135-155XL	H150-250E	H150-275H	H25-40XM
1	1	1	1	1	1	1	1	1	1	1*	1	1
H45-65XM	H165-280XL	H300-360XL	H300-350B	KE	P40-50A	P60-80A						
1	1.5	1.5	1.5	1	1	1						

* 8 HOURS INNER RODS

GJ - REPLACE STEERING PUMP

INCLUDES LABOR TO INSTALL PUMP AND SET PRESSURE

S20-30A	S25-35XL	S30-50C	S30-60ES	S40-60XL	S60-100E	S60-100B	S70-120XL	S125-150A	S25-40XM	S45-65XM	S135-155XL	
2	2	2	2	2	2	2	2.5	2	NA	NA	3.5	
H20-30E	H25-35XL	H30-60F/H	H40-60H/J	H40-60XL	H60-90C	H60-110E	H70-110XL	H110-150F	H135-155XL	H150-250E	H150-275H	H25-40XM
2	2	2	2	2	2	2	2.5	2	3	4	4	NA
H45-65XM	H165-280XL	H300-360XL	H300-350B	KE	P40-50A	P60-80A						
NA	4	4	4	2	2	2						

GL - ADJUST STEERING PRESSURE

S20-30A	S25-35XL	S30-50C	S30-60ES	S40-60XL	S60-100E	S60-100B	S70-120XL	S125-150A	S25-40XM	S45-65XM	S135-155XL	
1.5	1.5	1.5	1.5	1.5	1.5	1.5	1.5	1.5	1.5	1.5	1.5	
H20-30E	H25-35XL	H30-60F/H	H40-60H/J	H40-60XL	H60-90C	H60-110E	H70-110XL	H110-150F	H135-155XL	H150-250E	H150-275H	H25-40XM
1.5	1.5	1.5	1.5	1.5	1.5	1.5	1.5	1.5	1.5	1.5	1.5	1.5
H45-65XM	H165-280XL	H300-360XL	H300-350B	KE	P40-50A	P60-80A						
1.5	1.5	1.5	1.5	1.5	1.5	1.5						

GM - REPLACE STEERING FLOW DIVIDER

S20-30A	S25-35XL	S30-50C	S30-60ES	S40-60XL	S60-100E	S60-100B	S70-120XL	S125-150A	S25-40XM	S45-65XM	S135-155XL	
1.5	2	2	3.5	2	3.5	NA	1.5	NA	2	2	2	
H20-30E	H25-35XL	H30-60F/H	H40-60H/J	H40-60XL	H60-90C	H60-110E	H70-110XL	H110-150F	H135-155XL	H150-250E	H150-275H	H25-40XM
1.5	2	2	2	2	NA	2	1.5	NA	NA	2	2	2
H45-65XM	H165-280XL	H300-360XL	H300-350B	KE	P40-50A	P60-80A						
2	3	3	3	1.5	2	1.5						

GN - REPLACE STEERING GEAR OR HAND PUMP

LABOR TO INSTALL NEW OR REBUILT ASSEMBLY

S20-30A	S25-35XL	S30-50C	S30-60ES	S40-60XL	S60-100E	S60-100B	S70-120XL	S125-150A	S25-40XM	S45-65XM	S135-155XL	
2	3	2	3	3	3	3	3	3	3.5	3.5	3.5	
H20-30E	H25-35XL	H30-60F/H	H40-60H/J	H40-60XL	H60-90C	H60-110E	H70-110XL	H110-150F	H135-155XL	H150-250E	H150-275H	H25-40XM
2	3	3	3	3	4	3	3	3	3	3	3	3.5
H45-65XM	H165-280XL	H300-360XL	H300-350B	KE	P40-50A	P60-80A						
3.5	3.5	3.5	3.5	3	3	3						

GR - REPLACE STEERING WHEEL

INCLUDES HORN KIT

S20-30A	S25-35XL	S30-50C	S30-60ES	S40-60XL	S60-100E	S60-100B	S70-120XL	S125-150A	S25-40XM	S45-65XM	S135-155XL	
1	1	1	1	1	1	1	1	1	1	1	1	
H20-30E	H25-35XL	H30-60F/H	H40-60H/J	H40-60XL	H60-90C	H60-110E	H70-110XL	H110-150F	H135-155XL	H150-250E	H150-275H	H25-40XM
1	1	1	1	1	1	1	1	1	1	1	1	1
H45-65XM	H165-280XL	H300-360XL	H300-350B	KE	P40-50A	P60-80A						
1	1	1	.1	1	1	1						

GS - REPLACE STEEL AXLE SPINDLE (ONE SIDE)

S20-30A	S25-35XL	S30-50C	S30-60ES	S40-60XL	S60-100E	S60-100B	S70-120XL	S125-150A	S25-40XM	S45-65XM	S135-155XL	
3	3	3	3	3	3	3	3	3	3	3	3.5	
H20-30E	H25-35XL	H30-60F/H	H40-60H/J	H40-60XL	H60-90C	H60-110E	H70-110XL	H110-150F	H135-155XL	H150-250E	H150-275H	H25-40XM
3	3	3	3	3	3	3	3	3	3.5	3.5	3.5	3
H45-65XM	H165-280XL	H300-360XL	H300-350B	KE	P40-50A	P60-80A						
3	4.5	4.5	4.5	3	3	3.5						

GU - REPLACE KING PINS AND BEARINGS OR SPINDLE BEARINGS ONLY

S20-30A	S25-35XL	S30-50C	S30-60ES	S40-60XL	S60-100E	S60-100B	S70-120XL	S125-150A	S25-40XM	S45-65XM	S135-155XL	
6	4	6	4	4	4	4	6	8	4	4	4.5	
H20-30E	H25-35XL	H30-60F/H	H40-60H/J	H40-60XL	H60-90C	H60-110E	H70-110XL	H110-150F	H135-155XL	H150-250E	H150-275H	H25-40XM
4	4	4	6	4	4	8	6	5	6	6	6	4
H45-65XM	H165-280XL	H300-360XL	H300-350B	KE	P40-50A	P60-80A						
4	5	5	5	4	4	6						

GV - REPLACE CENTER ARM AND BEARINGS

S20-30A	S25-35XL	S30-50C	S30-60ES	S40-60XL	S60-100E	S60-100B	S70-120XL	S125-150A	S25-40XM	S45-65XM	S135-155XL	
7	NA	6	NA	NA	NA	6	NA	NA	NA	NA	NA	
H20-30E	H25-35XL	H30-60F/H	H40-60H/J	H40-60XL	H60-90C	H60-110E	H70-110XL	H110-150F	H135-155XL	H150-250E	H150-275H	H25-40XM
7	NA	6	6	NA	6	NA	NA	6	NA	8	NA	NA
H45-65XM	H165-280XL	H300-360XL	H300-350B	KE	P40-50A	P60-80A						
NA	NA	NA	NA	7	NA	NA						

GW - REPLACE STEERING SPINDLE HUB BEARINGS AND SEALS (BOTH SIDES)

S20-30A	S25-35XL	S30-50C	S30-60ES	S40-60XL	S60-100E	S60-100B	S70-120XL	S125-150A	S25-40XM	S45-65XM	S135-155XL	
2	2	2	2	2	2	2	2	2.5	2	2	2	
H20-30E	H25-35XL	H30-60F/H	H40-60H/J	H40-60XL	H60-90C	H60-110E	H70-110XL	H110-150F	H135-155XL	H150-250E	H150-275H	H25-40XM
2	2	2	2	2	2	2	2	2.5	2.5	2.5	2.5	2
H45-65XM	H165-280XL	H300-360XL	H300-350B	KE	P40-50A	P60-80A						
2	3	3	3	2	2	2						

BRAKE SYSTEM

JOB DESCRIPTION	JOB CODE
OVERHAUL BRAKE SYSTEM	HA
REPLACE PARK BRAKE HANDLE AND CABLES	HB
RESEAL PARK BRAKE HUB	HC
REPLACE BRAKE PEDAL PAD	HH
REPLACE MASTER CYLINDER	HJ
REBUILD MASTER CYLINDER	HJ
RESEAL PARK BRAKE CYLINDER	HK
REPLACE PARK BRAKE CYLINDER	HL
REPLACE PARK BRAKE HANDLE	HM
BLEED AND ADJUST BRAKES	HP

HA - OVERHAUL BRAKE SYSTEM

INCLUDES LABOR TO INSTALL NEW SHOES AND LINING, WHEEL CYLINDERS AND MASTER CYLINDER. INSPECT AND REPLACE AS NEEDED-ADJUSTORS, BACKING PLATES, PARK BRAKE CABLES OR LINKAGE AND PARK BRAKE SHOE LINING IF USED. INSPECT AND REPACK WHEEL AND FITTINGS, BLEED SYSTEM. ADJUST BRAKES, PEDAL LINKAGE, CABLES AND INCHING CONTROL. ADD COST OF TURNING DRUMS IF NEEDED.

S20-30A	S25-35XL	S30-50C	S30-60ES	S40-60XL	S60-100E	S60-100B	S70-120XL	S125-150A	S25-40XM	S45-65XM	S135-155XL	
7	8	7	8	8	8	12	10	12	8	8	10	
H20-30E	H25-35XL	H30-60F/H	H40-60H/J	H40-60XL	H60-90C	H60-110E	H70-110XL	H110-150F	H135-155XL	H150-250E	H150-275H	H25-40XM
7	8	8	8	8	8	7	10	8	10	12	12	8
H45-65XM	H165-280XL	H300-360XL	H300-350B	KE	P40-50A	P60-80A						
8	13	13	13	12	8	8						

HB - REPLACE PARK BRAKE HANDLE AND CBALES

INCLUDES LABOR TO REPLACE AND MAKE ALL ADJUSTMENTS.

S20-30A	S25-35XL	S30-50C	S30-60ES	S40-60XL	S60-100E	S60-100B	S70-120XL	S125-150A	S25-40XM	S45-65XM	S135-155XL	
5	4	4	4	4	4	4	6	6	5	5	6	
H20-30E	H25-35XL	H30-60F/H	H40-60H/J	H40-60XL	H60-90C	H60-110E	H70-110XL	H110-150F	H135-155XL	H150-250E	H150-275H	H25-40XM
5	4	5	5	4	6	4	6	6	6	3	3	5
H45-65XM	H165-280XL	H300-360XL	H300-350B	KE	P40-50A	P60-80A						
5	NA	NA	6	2	6	4						

HC - RESEAL PARK BRAKE DRUM HUB

INCLUDES LABOR TO REPLACE SEALS, CLEAN OR REPLACE SHOE AND MAKE ADJUSTMENTS.

S20-30A	S25-35XL	S30-50C	S30-60ES	S40-60XL	S60-100E	S60-100B	S70-120XL	S125-150A	S25-40XM	S45-65XM	S135-155XL	
NA	3	2.5	NA	3	NA	3	3.5	NA	NA	NA	NA	
H20-30E	H25-35XL	H30-60F/H	H40-60H/J	H40-60XL	H60-90C	H60-110E	H70-110XL	H110-150F	H135-155XL	H150-250E	H150-275H	H25-40XM
NA	3	NA	NA	NA	2.5	NA	3.5	NA	3.5	2.5	2.5	NA
H45-65XM	H165-280XL	H300-360XL	H300-350B	KE	P40-50A	P60-80A						
NA	NA	NA	NA	NA	NA	2.5						

HH - REPLACE BRAKE PEDAL PAD

S20-30A	S25-35XL	S30-50C	S30-60ES	S40-60XL	S60-100E	S60-100B	S70-120XL	S125-150A	S25-40XM	S45-65XM	S135-155XL	
.5	.5	.5	.5	.5	.5	.5	.5	.5	.5	.5	.5	
H20-30E	H25-35XL	H30-60F/H	H40-60H/J	H40-60XL	H60-90C	H60-110E	H70-110XL	H110-150F	H135-155XL	H150-250E	H150-275H	H25-40XM
.5	.5	.5	.5	.5	.5	.5	.5	.5	.5	.5	.5	.5
H45-65XM	H165-280XL	H300-360XL	H300-350B	KE	P40-50A	P60-80A						
.5	.5	.5	.5	.5	.5	.5						

HJ - REPLACE MASTER CYLINDER

S20-30A	S25-35XL	S30-50C	S30-60ES	S40-60XL	S60-100E	S60-100B	S70-120XL	S125-150A	S25-40XM	S45-65XM	S135-155XL	
1.5	1.5	1.5	1.5	1.5	1.5	1.5	2	2	2	2	2	
H20-30E	H25-35XL	H30-60F/H	H40-60H/J	H40-60XL	H60-90C	H60-110E	H70-110XL	H110-150F	H135-155XL	H150-250E	H150-275H	H25-40XM
1.5	1.5	1.5	1.5	1.5	2	2	2	2	2	2.5	2.5	2
H45-65XM	H165-280XL	H300-360XL	H300-350B	KE	P40-50A	P60-80A						
2	3*	3*	3*	1.5	2	2						

*TREADLE VALVE

HJ - REBUILD MASTER CYLINDER

S20-30A	S25-35XL	S30-50C	S30-60ES	S40-60XL	S60-100E	S60-100B	S70-120XL	S125-150A	S25-40XM	S45-65XM	S135-155XL	
2	2	2	2	2	2	2	2.5	2.5	3	3	3	
H20-30E	H25-35XL	H30-60F/H	H40-60H/J	H40-60XL	H60-90C	H60-110E	H70-110XL	H110-150F	H135-155XL	H150-250E	H150-275H	H25-40XM
2	2	2	2	2	2.5	2.5	2.5	2.5	2.5	3	3	3
H45-65XM	H165-280XL	H300-360XL	H300-350B	KE	P40-50A	P60-80A						
3	4*	4*	4*	2	2.5	2.5						

*TREADLE VALVE

HK - RESEAL PARK BRAKE CYLINDER

INCLUDES LABOR TO REMOVE, DISASSEMBLE, INSPECT, REPLACE SEALS, REASSEMBLE, INSTALL AND ADJUST.

S20-30A	S25-35XL	S30-50C	S30-60ES	S40-60XL	S60-100E	S60-100B	S70-120XL	S125-150A	S25-40XM	S45-65XM	S135-155XL	
2	NA	2	NA	NA	NA	2	NA	NA	NA	NA	NA	
H20-30E	H25-35XL	H30-60F/H	H40-60H/J	H40-60XL	H60-90C	H60-110E	H70-110XL	H110-150F	H135-155XL	H150-250E	H150-275H	H25-40XM
2	NA	NA	NA	NA	NA	NA	NA	NA	NA	NA	NA	NA
H45-65XM	H165-280XL	H300-360XL	H300-350B	KE	P40-50A	P60-80A						
NA	5*	5*	NA	NA	NA	NA						

*AIR BRAKE CHAMBER (BOTH)

HL - REPLACE PARK BRAKE CYLINDER

S20-30A	S25-35XL	S30-50C	S30-60ES	S40-60XL	S60-100E	S60-100B	S70-120XL	S125-150A	S25-40XM	S45-65XM	S135-155XL	
1.5	NA	2	NA	NA	NA	1.5	NA	NA	NA	NA	NA	
H20-30E	H25-35XL	H30-60F/H	H40-60H/J	H40-60XL	H60-90C	H60-110E	H70-110XL	H110-150F	H135-155XL	H150-250E	H150-275H	H25-40XM
1.5	NA	NA	NA	NA	NA	NA	NA	NA	NA	NA	NA	NA
H45-65XM	H165-280XL	H300-360XL	H300-350B	KE	P40-50A	P60-80A						
NA	NA	4*	4*	NA	NA	NA						

*AIR BRAKE CHAMBER (BOTH)

HM - REPLACE PARK BRAKE HANDLE

CLEAN AND LUBE CABLES, MAKE ADJUSTMENTS

S20-30A	S25-35XL	S30-50C	S30-60ES	S40-60XL	S60-100E	S60-100B	S70-120XL	S125-150A	S25-40XM	S45-65XM	S135-155XL	
2	2	2	2	2	2	2	2	2	2	2	2	
H20-30E	H25-35XL	H30-60F/H	H40-60H/J	H40-60XL	H60-90C	H60-110E	H70-110XL	H110-150F	H135-155XL	H150-250E	H150-275H	H25-40XM
2	2	2	2	2	2	2	2	2	2	2	2	2
H45-65XM	H165-280XL	H300-360XL	H300-350B	KE	P40-50A	P60-80A						
2	1.5*	1.5*	2	2	2	2						

*AIR BRAKE VALVE IN DASH

HP - BLEED AND ADJUST BRAKES

S20-30A	S25-35XL	S30-50C	S30-60ES	S40-60XL	S60-100E	S60-100B	S70-120XL	S125-150A	S25-40XM	S45-65XM	S135-155XL	
2	2	2	2	2	2	2	2	2	2	2	2	
H20-30E	H25-35XL	H30-60F/H	H40-60H/J	H40-60XL	H60-90C	H60-110E	H70-110XL	H110-150F	H135-155XL	H150-250E	H150-275H	H25-40XM
2	2	2	2	2	2.5	2.5	2.5	2.5	2.5	2.5	2.5	2
H45-65XM	H165-280XL	H300-360XL	H300-350B	KE	P40-50A	P60-80A						
2	1.5	1.5	1.5	2.5	2.5	2.5						

ELECTRICAL

JOB DESCRIPTION	JOB CODE
REPLACE TEMPERATURE GAUGE	IA
REPLACE OIL PRESSURE GAUGE	IA
REPLACE AMMETER GAUGE	IA
REPLACE WIRING HARNESS AND INSTRUMENTS	IB
REPLACE POSITIVE AND NEGATIVE BATTERY CABLES - FOR GAS AND LPG ENGINES	IC
REPLACE POSITIVE AND NEGATIVE BATTERY CABLES - FOR DIESEL ENGINES	IC
REPLACE IGNITION SWITCH	ID
REPLACE DASH PANEL	IE
REPLACE STARTER	IF
REPLACE BATTERY HOLD DOWN-GAS/LPG/DIESEL	IG
REPLACE BATTERY - GAS/LPG/DIESEL	IH
REPLACE HORN	II
REPLACE HORN BUTTON	IJ
REPLACE HOURMETER	IK
REPLACE ALTERNATOR AND VOLTAGE REGULATOR	IP
REPLACE VOLTAGE REGULATOR	IS
REPLACE IGNITION COIL	IT
REPLACE TEMPERATURE SENDING UNIT	IU
REPLACE OIL PRESSURE SENDING UNIT	IU
REPLACE SPARK PLUG WIRES	IV
REPLACE STARTER DRIVE	IX

IA - REPLACE TEMPERATURE GAUGE

S20-30A	S25-35XL	S30-50C	S30-60ES	S40-60XL	S60-100E	S60-100B	S70-120XL	S125-150A	S25-40XM	S45-65XM	S135-155XL	
.5	.5	.5	.5	.5	.5	.5	.5	.5	1	1	1	
H20-30E	H25-35XL	H30-60F/H	H40-60H/J	H40-60XL	H60-90C	H60-110E	H70-110XL	H110-150F	H135-155XL	H150-250E	H150-275H	H25-40XM
.5	.5	.5	.5	.5	.5	.5	.5	.5	.5	.5	.5	1
H45-65XM	H165-280XL	H300-360XL	H300-350B	KE	P40-50A	P60-80A						
1	1	1	1	.5	.5	.5						

IA - REPLACE PRESSURE GAUGE

S20-30A	S25-35XL	S30-50C	S30-60ES	S40-60XL	S60-100E	S60-100B	S70-120XL	S125-150A	S25-40XM	S45-65XM	S135-155XL	
.5	.5	.5	.5	.5	.5	.5	.5	.5	1	1	1	
H20-30E	H25-35XL	H30-60F/H	H40-60H/J	H40-60XL	H60-90C	H60-110E	H70-110XL	H110-150F	H135-155XL	H150-250E	H150-275H	H25-40XM
.5	.5	.5	.5	.5	.5	.5	.5	.5	.5	.5	.5	1
H45-65XM	H165-280XL	H300-360XL	H300-350B	KE	P40-50A	P60-80A						
1	1	1	1	.5	.5	.5						

IA - REPLACE AMMETER GAUGE

S20-30A	S25-35XL	S30-50C	S30-60ES	S40-60XL	S60-100E	S60-100B	S70-120XL	S125-150A	S25-40XM	S45-65XM	S135-155XL	
.5	.5	.5	.5	.5	.5	.5	.5	.5	1	1	1	
H20-30E	H25-35XL	H30-60F/H	H40-60H/J	H40-60XL	H60-90C	H60-110E	H70-110XL	H110-150F	H135-155XL	H150-250E	H150-275H	H25-40XM
.5	.5	.5	.5	.5	.5	.5	.5	.5	.5	.5	.5	1
H45-65XM	H165-280XL	H300-360XL	H300-350B	KE	P40-50A	P60-80A						
1	1	1	1	.5	.5	.5						

IB - REPLACE WIRE HARNESS AND INSTRUMENTS

INCLUDES LABOR TO REPLACE ALL WIRING, GAUGES, LAMPS, IGNITION SWITCH, HOUR METER, HORN AND HORN DELAY. TIME DOES NOT INCLUDE MAKING HARNESSES.

S20-30A	S25-35XL	S30-50C	S30-60ES	S40-60XL	S60-100E	S60-100B	S70-120XL	S125-150A	S25-40XM	S45-65XM	S135-155XL	
8	8	8	8	8	8	8	8	8	8	8	9	
H20-30E	H25-35XL	H30-60F/H	H40-60H/J	H40-60XL	H60-90C	H60-110E	H70-110XL	H110-150F	H135-155XL	H150-250E	H150-275H	H25-40XM
7	8	8	8	8	8	8	8	10	9	10	10	8
H45-65XM	H165-280XL	H300-360XL	H300-350B	KE	P40-50A	P60-80A						
8	11	11	11	8	10	10						

IC - REPLACE POSITIVE AND NEGATIVE BATTERY CABLES FOR GAS/LPG ENGINES

S20-30A	S25-35XL	S30-50C	S30-60ES	S40-60XL	S60-100E	S60-100B	S70-120XL	S125-150A	S25-40XM	S45-65XM	S135-155XL	
1	1	1	1	1	1	1	1	1	1	1	1	
H20-30E	H25-35XL	H30-60F/H	H40-60H/J	H40-60XL	H60-90C	H60-110E	H70-110XL	H110-150F	H135-155XL	H150-250E	H150-275H	H25-40XM
1	1	1	1	1	1	1	1	1	1	1	1	1
H45-65XM	H165-280XL	H300-360XL	H300-350B	KE	P40-50A	P60-80A						
1	NA	NA	NA	1	1	1						

IC - REPLACE POSITIVE AND NEGATIVE BATTERY CABLES FOR DIESEL ENGINES

S20-30A	S25-35XL	S30-50C	S30-60ES	S40-60XL	S60-100E	S60-100B	S70-120XL	S125-150A	S25-40XM	S45-65XM	S135-155XL	
1.5	1.5	1.5	1.5	1.5	1.5	1.5	1.5	1.5	1	1	1	
H20-30E	H25-35XL	H30-60F/H	H40-60H/J	H40-60XL	H60-90C	H60-110E	H70-110XL	H110-150F	H135-155XL	H150-250E	H150-275H	H25-40XM
1.5	1.5	1.5	1.5	1.5	1.5	1.5	1.5	1.5	1.5	1.5	1.5	1
H45-65XM	H165-280XL	H300-360XL	H300-350B	KE	P40-50A	P60-80A						
1	1	1	1	1.5	1.5	1.5						

ID - REPLACE IGNITION SWITCH

CHECK FOR BAD WIRES. REPLACE WIRE END, IF NEEDED.

S20-30A	S25-35XL	S30-50C	S30-60ES	S40-60XL	S60-100E	S60-100B	S70-120XL	S125-150A	S25-40XM	S45-65XM	S135-155XL	
1	1	1	1	1	1	1	1	1	1	1	1	
H20-30E	H25-35XL	H30-60F/H	H40-60H/J	H40-60XL	H60-90C	H60-110E	H70-110XL	H110-150F	H135-155XL	H150-250E	H150-275H	H25-40XM
1	1	1	1	1	1	1	1	1	1	1	1	1
H45-65XM	H165-280XL	H300-360XL	H300-350B	KE	P40-50A	P60-80A						
1	1	1	1	1	1	1						

IE - REPLACE DASH PANEL

S20-30A	S25-35XL	S30-50C	S30-60ES	S40-60XL	S60-100E	S60-100B	S70-120XL	S125-150A	S25-40XM	S45-65XM	S135-155XL	
4	4	4	4	4	4	4	4	4	3.5	3.5	4	
H20-30E	H25-35XL	H30-60F/H	H40-60H/J	H40-60XL	H60-90C	H60-110E	H70-110XL	H110-150F	H135-155XL	H150-250E	H150-275H	H25-40XM
4	4	4	4	4	4	4	4	4	4	4	4	3.5
H45-65XM	H165-280XL	H300-360XL	H300-350B	KE	P40-50A	P60-80A						
3.5	4	4	4	4	4	4						

IF - REPLACE STARTER

S20-30A	S25-35XL	S30-50C	S30-60ES	S40-60XL	S60-100E	S60-100B	S70-120XL	S125-150A	S25-40XM	S45-65XM	S135-155XL	
1.5	1.5	1.5	1	1.5	1.5	1.5	2	1	1.5	1.5	2	
H20-30E	H25-35XL	H30-60F/H	H40-60H/J	H40-60XL	H60-90C	H60-110E	H70-110XL	H110-150F	H135-155XL	H150-250E	H150-275H	H25-40XM
1.5	1.5	1	1	1	1	1	2	1	2	1.5	1.5	1.5
H45-65XM	H165-280XL	H300-360XL	H300-350B	KE	P40-50A	P60-80A						
1.5	2	2	2	1	1	1						

IG - REPLACE BATTERY HOLD DOWN - GAS/LPG/DIESEL

S20-30A	S25-35XL	S30-50C	S30-60ES	S40-60XL	S60-100E	S60-100B	S70-120XL	S125-150A	S25-40XM	S45-65XM	S135-155XL	
1	1	1	1	1	1	1	1	1	1	1	1	
H20-30E	H25-35XL	H30-60F/H	H40-60H/J	H40-60XL	H60-90C	H60-110E	H70-110XL	H110-150F	H135-155XL	H150-250E	H150-275H	H25-40XM
1	1	1	1	1	1	1	1	1	1	1	1	1
H45-65XM	H165-280XL	H300-360XL	H300-350B	KE	P40-50A	P60-80A						
1	1	1	1	1	1	1						

IH - REPLACE BATTERY - GAS/LPG/DIESEL

CLEAN CABLES AND SPRAY WITH PROTECTANT. CHECK CHARGING SYSTEM.

S20-30A	S25-35XL	S30-50C	S30-60ES	S40-60XL	S60-100E	S60-100B	S70-120XL	S125-150A	S25-40XM	S45-65XM	S135-155XL	
1	1	1	1	1	1	1	1	1	1	1	1	
H20-30E	H25-35XL	H30-60F/H	H40-60H/J	H40-60XL	H60-90C	H60-110E	H70-110XL	H110-150F	H135-155XL	H150-250E	H150-275H	H25-40XM
1	1	1	1	1	1	1	1	1	1	1	1	1
H45-65XM	H165-280XL	H300-360XL	H300-350B	KE	P40-50A	P60-80A						
1	1	1	1	1	1	1						

II - REPLACE HORN

S20-30A	S25-35XL	S30-50C	S30-60ES	S40-60XL	S60-100E	S60-100B	S70-120XL	S125-150A	S25-40XM	S45-65XM	S135-155XL	
1	1	1	1	1	1	1	1	1	1	1	1	
H20-30E	H25-35XL	H30-60F/H	H40-60H/J	H40-60XL	H60-90C	H60-110E	H70-110XL	H110-150F	H135-155XL	H150-250E	H150-275H	H25-40XM
1	1	1	1	1	1	1	1	1	1	1	1	1
H45-65XM	H165-280XL	H300-360XL	H300-350B	KE	P40-50A	P60-80A						
1	1	1	1	1	1	1						

IJ - REPLACE HORN BUTTON

S20-30A	S25-35XL	S30-50C	S30-60ES	S40-60XL	S60-100E	S60-100B	S70-120XL	S125-150A	S25-40XM	S45-65XM	S135-155XL	
.5	.5	.5	.5	.5	.5	.5	.5	.5	.5	.5	.5	
H20-30E	H25-35XL	H30-60F/H	H40-60H/J	H40-60XL	H60-90C	H60-110E	H70-110XL	H110-150F	H135-155XL	H150-250E	H150-275H	H25-40XM
.5	.5	.5	.5	.5	.5	.5	.5	.5	.5	.5	.5	.5
H45-65XM	H165-280XL	H300-360XL	H300-350B	KE	P40-50A	P60-80A						
.5	.5	.5	.5	.5	.5	.5						

IK - REPLACE HOURMETER

S20-30A	S25-35XL	S30-50C	S30-60ES	S40-60XL	S60-100E	S60-100B	S70-120XL	S125-150A	S25-40XM	S45-65XM	S135-155XL	
.5	.5	.5	.5	.5	.5	.5	.5	.5	1	1	1	
H20-30E	H25-35XL	H30-60F/H	H40-60H/J	H40-60XL	H60-90C	H60-110E	H70-110XL	H110-150F	H135-155XL	H150-250E	H150-275H	H25-40XM
.5	.5	.5	.5	.5	.5	.5	.5	.5	.5	.5	.5	1
H45-65XM	H165-280XL	H300-360XL	H300-350B	KE	P40-50A	P60-80A						
1	1	1	1	.5	.5	.5						

IP - REPLACE ALTERNATOR AND VOLTAGE REGULATOR

INCLUDES LABOR TO CHECK VOLTAGE AND AMPERE OUTPUT.

S20-30A	S25-35XL	S30-50C	S30-60ES	S40-60XL	S60-100E	S60-100B	S70-120XL	S125-150A	S25-40XM	S45-65XM	S135-155XL	
1	1	1	1	1	1	1	1	1	1.5	1.5	1.5	
H20-30E	H25-35XL	H30-60F/H	H40-60H/J	H40-60XL	H60-90C	H60-110E	H70-110XL	H110-150F	H135-155XL	H150-250E	H150-275H	H25-40XM
1	1	1	1	1	1	1	1	1	1	1	1	1.5
H45-65XM	H165-280XL	H300-360XL	H300-350B	KE	P40-50A	P60-80A						
1.5	1.5	1.5	1.5	1	1	1						

IS - REPLACE VOLTAGE REGULATOR

CHECK CHARGING SYSTEM

S20-30A	S25-35XL	S30-50C	S30-60ES	S40-60XL	S60-100E	S60-100B	S70-120XL	S125-150A	S25-40XM	S45-65XM	S135-155XL	
.5	.5	.5	.5	.5	.5	.5	.5	.5	2	2	*	
H20-30E	H25-35XL	H30-60F/H	H40-60H/J	H40-60XL	H60-90C	H60-110E	H70-110XL	H110-150F	H135-155XL	H150-250E	H150-275H	H25-40XM
.5	.5	.5	.5	.5	.5	.5	.5	.5	*	.5	.5	2
H45-65XM	H165-280XL	H300-360XL	H300-350B	KE	P40-50A	P60-80A						
2	*	*	2	.5	.5	.5						

* .5 HR WITH PRESTOLITE EXTERNAL REG. 2 HRS. WITH DELCO INTERVAL REG.

IT - REPLACE IGNITION COIL

S20-30A	S25-35XL	S30-50C	S30-60ES	S40-60XL	S60-100E	S60-100B	S70-120XL	S125-150A	S25-40XM	S45-65XM	S135-155XL	
.5	.5	.5	.5	.5	.5	.5	.5	.5	.5	.5	.5	
H20-30E	H25-35XL	H30-60F/H	H40-60H/J	H40-60XL	H60-90C	H60-110E	H70-110XL	H110-150F	H135-155XL	H150-250E	H150-275H	H25-40XM
.5	.5	.5	.5	.5	.5	.5	.5	.5	.5	.5	.5	.5
H45-65XM	H165-280XL	H300-360XL	H300-350B	KE	P40-50A	P60-80A						
.5	NA	NA	NA	.5	.5	.5						

IU - REPLACE TEMPERATURE SENDING UNIT

S20-30A	S25-35XL	S30-50C	S30-60ES	S40-60XL	S60-100E	S60-100B	S70-120XL	S125-150A	S25-40XM	S45-65XM	S135-155XL	
.5	.5	.5	.5	.5	.5	.5	.5	.5	.5	.5	.5	
H20-30E	H25-35XL	H30-60F/H	H40-60H/J	H40-60XL	H60-90C	H60-110E	H70-110XL	H110-150F	H135-155XL	H150-250E	H150-275H	H25-40XM
.5	.5	.5	.5	.5	.5	.5	.5	.5	.5	.5	.5	.5
H45-65XM	H165-280XL	H300-360XL	H300-350B	KE	P40-50A	P60-80A						
.5	.5	.5	.5	.5	.5	.5						

IU - REPLACE OIL PRESSURE SENDING UNIT

S20-30A	S25-35XL	S30-50C	S30-60ES	S40-60XL	S60-100E	S60-100B	S70-120XL	S125-150A	S25-40XM	S45-65XM	S135-155XL	
.5	.5	.5	.5	.5	.5	.5	.5	.5	.5	.5	.5	
H20-30E	H25-35XL	H30-60F/H	H40-60H/J	H40-60XL	H60-90C	H60-110E	H70-110XL	H110-150F	H135-155XL	H150-250E	H150-275H	H25-40XM
.5	.5	.5	.5	.5	.5	.5	.5	.5	.5	.5	.5	.5
H45-65XM	H165-280XL	H300-360XL	H300-350B	KE	P40-50A	P60-80A						
.5	.5	.5	.5	.5	.5	.5						

IV - REPLACE SPARK PLUG WIRES

S20-30A	S25-35XL	S30-50C	S30-60ES	S40-60XL	S60-100E	S60-100B	S70-120XL	S125-150A	S25-40XM	S45-65XM	S135-155XL	
.5	.5	.5	.5	.5	.5	.5	.5	.5	.5	.5	.5	
H20-30E	H25-35XL	H30-60F/H	H40-60H/J	H40-60XL	H60-90C	H60-110E	H70-110XL	H110-150F	H135-155XL	H150-250E	H150-275H	H25-40XM
.5	.5	.5	.5	.5	.5	.5	.5	.5	.5	.5	.5	.5
H45-65XM	H165-280XL	H300-360XL	H300-350B	KE	P40-50A	P60-80A						
.5	NA	NA	NA	.5	.5	.5						

IX - REPLACE STARTER DRIVE

S20-30A	**S25-35XL**	**S30-50C**	**S30-60ES**	**S40-60XL**	**S60-100E**	**S60-100B**	**S70-120XL**	**S125-150A**	**S25-40XM**	**S45-65XM**	**S135-155XL**	
3	3	3	2	3	3	3	3.5	2.5	3	3	3.5	
H20-30E	**H25-35XL**	**H30-60F/H**	**H40-60H/J**	**H40-60XL**	**H60-90C**	**H60-110E**	**H70-110XL**	**H110-150F**	**H135-155XL**	**H150-250E**	**H150-275H**	**H25-40XM**
3	3	2.5	2.5	2.5	2.5	2.5	3.5	2.5	3.5	3	3	3
H45-65XM	**H165-280XL**	**H300-360XL**	**H300-350B**	**KE**	**P40-50A**	**P60-80A**						
3	3.5	3.5	3.5	2.5	2.5	2.5						

NOTES

APPEARANCE

JOB DESCRIPTION	JOB CODE
PAINT AND DECAL	JA
STEAM CLEAN	JB

JA- PAINT AND DECAL

INCLUDES LABOR TO SAND, PAINT AND INSTALL DECALS. ADD STEAM CLEANING IF NEEDED.

S20-30A	**S25-35XL**	**S30-50C**	**S30-60ES**	**S40-60XL**	**S60-100E**	**S60-100B**	**S70-120XL**	**S125-150A**	**S25-40XM**	**S45-65XM**	**S135-155XL**	
12	12	12	12	12	12	12	13	12	13	13	16	
H20-30E	**H25-35XL**	**H30-60F/H**	**H40-60H/J**	**H40-60XL**	**H60-90C**	**H60-110E**	**H70-110XL**	**H110-150F**	**H135-155XL**	**H150-250E**	**H150-275H**	**H25-40XM**
12	12	12	12	12	12	12	13	14	15	16	16	13
H45-65XM	**H165-280XL**	**H300-360XL**	**H300-350B**	**KE**	**P40-50A**	**P60-80A**						
13	18	18	18	14	12	12						

JB - STEAM CLEAN

DEPENDS ON CONDITION OF TRUCK. MINIMUM TIME AS LISTED.

S20-30A	**S25-35XL**	**S30-50C**	**S30-60ES**	**S40-60XL**	**S60-100E**	**S60-100B**	**S70-120XL**	**S125-150A**	**S25-40XM**	**S45-65XM**	**S135-155XL**	
1.5	1.5	1.5	1.5	1.5	1.5	1.5	1.5	2	1.5	1.5	2	
H20-30E	**H25-35XL**	**H30-60F/H**	**H40-60H/J**	**H40-60XL**	**H60-90C**	**H60-110E**	**H70-110XL**	**H110-150F**	**H135-155XL**	**H150-250E**	**H150-275H**	**H25-40XM**
1.5	1.5	1.5	1.5	1.5	1.5	1.5	2	2	2	4	4	1.5
H45-65XM	**H165-280XL**	**H300-360XL**	**H300-350B**	**KE**	**P40-50A**	**P60-80A**						
1.5	3	3	3	4	2	2						

FRAME

JOB DESCRIPTION	JOB CODE
REPLACE FRAME MOUNTING BUSHINGS	KE

KE - REPLACE FRAME MOUNTING BUSHINGS

INCLUDES TIME TO REMOVE AND REPLACE UPRIGHT.

S20-30A	**S25-35XL**	**S30-50C**	**S30-60ES**	**S40-60XL**	**S60-100E**	**S60-100B**	**S70-120XL**	**S125-150A**	**S25-40XM**	**S45-65XM**	**S135-155XL**	
NA	NA	7	NA	NA	NA	12	NA	NA	NA	NA	NA	
H20-30E	**H25-35XL**	**H30-60F/H**	**H40-60H/J**	**H40-60XL**	**H60-90C**	**H60-110E**	**H70-110XL**	**H110-150F**	**H135-155XL**	**H150-250E**	**H150-275H**	**H25-40XM**
NA	NA	7	7	NA	NA	NA	NA	NA	NA	NA	NA	NA
H45-65XM	**H165-280XL**	**H300-360XL**	**H300-350B**	**KE**	**P40-50A**	**P60-80A**						
NA	NA	NA	NA	NA	NA	NA						

FUEL SYSTEM

JOB DESCRIPTION	JOB CODE
REPLACE CARBURETOR - GAS	MA
REBUILD CARBURETOR - GAS	MA
REPLACE CARBURETOR - LPG	MA
REBUILD CARBURETOR - LPG	MA
REPLACE CHOKE CABLE	MC
REPLACE KILL CABLE	MC
REPLACE FILTER - LPG	MD
REBUILD FILTER - LPG	MD
REPLACE HOSE - LPG	ME
REPLACE LIFT PUMP - DIESEL	MG
REPLACE FUEL PUMP - GAS	MG
REPLACE TANK BRACKET - LPG	MJ
REPLACE MONOTROL PEDAL	MK
REPLACE THROTTLE PEDAL - STD XMSN	MK
REPLACE THROTTLE PEDAL - FWD/REV LEVER PS XMSN	MK
REPLACE INJECTOR PUMP - DIESEL	MP
REPLACE VAPORIZER - LPG	MT
REBUILD VAPORIZER - LPG	MT
REPLACE THROTTLE CABLE - STD XMSN	MU
REPLACE THROTTLE CABLE - FWD/REV LVR PS	MU

MA - REPLACE CARBURETOR - GAS

S20-30A	S25-35XL	S30-50C	S30-60ES	S40-60XL	S60-100E	S60-100B	S70-120XL	S125-150A	S25-40XM	S45-65XM	S135-155XL	
1	1	1	1	1	1	1	1	1	1.5	1.5	1.5	
H20-30E	H25-35XL	H30-60F/H	H40-60H/J	H40-60XL	H60-90C	H60-110E	H70-110XL	H110-150F	H135-155XL	H150-250E	H150-275H	H25-40XM
1	1	1	1	1	1	1	1	1	1	1	1	1.5
H45-65XM	H165-280XL	H300-360XL	H300-350B	KE	P40-50A	P60-80A						
1.5	NA	NA	NA	1	1	1						

MA - REBUILD CARBURETOR - GAS

S20-30A	S25-35XL	S30-50C	S30-60ES	S40-60XL	S60-100E	S60-100B	S70-120XL	S125-150A	S25-40XM	S45-65XM	S135-155XL	
2.5	2.5	2.5	2.5	2.5	2.5	2.5	2.5	2.5	3	3	3	
H20-30E	H25-35XL	H30-60F/H	H40-60H/J	H40-60XL	H60-90C	H60-110E	H70-110XL	H110-150F	H135-155XL	H150-250E	H150-275H	H25-40XM
2.5	2.5	2.5	2.5	2.5	2.5	2.5	2.5	2.5	2.5	2.5	2.5	3
H45-65XM	H165-280XL	H300-360XL	H300-350B	KE	P40-50A	P60-80A						
3	NA	NA	NA	2.5	2.5	2.5						

MA - REPLACE CARBURETOR - LPG

S20-30A	S25-35XL	S30-50C	S30-60ES	S40-60XL	S60-100E	S60-100B	S70-120XL	S125-150A	S25-40XM	S45-65XM	S135-155XL	
1	1	1	1	1	1	1	1	1	1.5	1.5	1.5	
H20-30E	H25-35XL	H30-60F/H	H40-60H/J	H40-60XL	H60-90C	H60-110E	H70-110XL	H110-150F	H135-155XL	H150-250E	H150-275H	H25-40XM
1	1	1	1	1	1	1	1	1	1	1	1	1.5
H45-65XM	H165-280XL	H300-360XL	H300-350B	KE	P40-50A	P60-80A						
1.5	NA	NA	NA	1	1	1						

MA - REBUILD CARBURETOR - LPG

S20-30A	S25-35XL	S30-50C	S30-60ES	S40-60XL	S60-100E	S60-100B	S70-120XL	S125-150A	S25-40XM	S45-65XM	S135-155XL	
2	2	2	2	2	2	2	2	2	2	2	2.5	
H20-30E	H25-35XL	H30-60F/H	H40-60H/J	H40-60XL	H60-90C	H60-110E	H70-110XL	H110-150F	H135-155XL	H150-250E	H150-275H	H25-40XM
2	2	2	2	2	2	2	2	2	2	2	2	2
H45-65XM	H165-280XL	H300-360XL	H300-350B	KE	P40-50A	P60-80A						
2	NA	NA	NA	2	2	2						

MC - REPLACE CHOKE CABLE

S20-30A	S25-35XL	S30-50C	S30-60ES	S40-60XL	S60-100E	S60-100B	S70-120XL	S125-150A	S25-40XM	S45-65XM	S135-155XL	
1	1	1	1	1	1	1	1	1	1	1	1	
H20-30E	H25-35XL	H30-60F/H	H40-60H/J	H40-60XL	H60-90C	H60-110E	H70-110XL	H110-150F	H135-155XL	H150-250E	H150-275H	H25-40XM
1	1	1	1	1	1	1	1	1	1	1	1	1
H45-65XM	H165-280XL	H300-360XL	H300-350B	KE	P40-50A	P60-80A						
1	NA	NA	NA	1	1	1						

MC - REPLACE KILL CABLE

S20-30A	S25-35XL	S30-50C	S30-60ES	S40-60XL	S60-100E	S60-100B	S70-120XL	S125-150A	S25-40XM	S45-65XM	S135-155XL	
1	1	1	1	1	1	1	1	1	1	1	1	
H20-30E	H25-35XL	H30-60F/H	H40-60H/J	H40-60XL	H60-90C	H60-110E	H70-110XL	H110-150F	H135-155XL	H150-250E	H150-275H	H25-40XM
1	1	1	1	1	1	1	1	1	1	1	1	1
H45-65XM	H165-280XL	H300-360XL	H300-350B	KE	P40-50A	P60-80A						
1	1	1	1	1	1	1						

MD - REPLACE FILTER - LPG

S20-30A	S25-35XL	S30-50C	S30-60ES	S40-60XL	S60-100E	S60-100B	S70-120XL	S125-150A	S25-40XM	S45-65XM	S135-155XL	
1	1	1	1	1	1	1	1	1	1	1	1	
H20-30E	H25-35XL	H30-60F/H	H40-60H/J	H40-60XL	H60-90C	H60-110E	H70-110XL	H110-150F	H135-155XL	H150-250E	H150-275H	H25-40XM
1	1	1	1	1	1	1	1	1	1	1	1	1
H45-65XM	H165-280XL	H300-360XL	H300-350B	KE	P40-50A	P60-80A						
1	NA	NA	NA	1	1	1						

MD - REBUILD FILTER - LPG

S20-30A	S25-35XL	S30-50C	S30-60ES	S40-60XL	S60-100E	S60-100B	S70-120XL	S125-150A	S25-40XM	S45-65XM	S135-155XL	
1.5	1.5	1.5	1.5	1.5	1.5	1.5	1.51	1.5	1.5	1.5	1.5	
H20-30E	H25-35XL	H30-60F/H	H40-60H/J	H40-60XL	H60-90C	H60-110E	H70-110XL	H110-150F	H135-155XL	H150-250E	H150-275H	H25-40XM
1.5	1.5	1.5	1.5	1.5	1.5	1.5	1.51	1.5	1.5	1.5	1.5	1.5
H45-65XM	H165-280XL	H300-360XL	H300-350B	KE	P40-50A	P60-80A						
1.5	NA	NA	NA	1.5	1.5	1.5						

ME - REPLACE LPG HOSE

TANK TO FILTER

S20-30A	S25-35XL	S30-50C	S30-60ES	S40-60XL	S60-100E	S60-100B	S70-120XL	S125-150A	S25-40XM	S45-65XM	S135-155XL	
.5	.5	.5	.5	.5	.5	.5	.5	.5	.5	.5	.5	
H20-30E	H25-35XL	H30-60F/H	H40-60H/J	H40-60XL	H60-90C	H60-110E	H70-110XL	H110-150F	H135-155XL	H150-250E	H150-275H	H25-40XM
.5	.5	.5	.5	.5	.5	.5	.5	.5	.5	.5	.5	.5
H45-65XM	H165-280XL	H300-360XL	H300-350B	KE	P40-50A	P60-80A						
.5	NA	NA	NA	.5	.5	.5						

MG - REPLACE LIFT PUMP - DIESEL

S20-30A	S25-35XL	S30-50C	S30-60ES	S40-60XL	S60-100E	S60-100B	S70-120XL	S125-150A	S25-40XM	S45-65XM	S135-155XL	
NA	1	1	1	1	1	1	1	1	1	1	1	
H20-30E	H25-35XL	H30-60F/H	H40-60H/J	H40-60XL	H60-90C	H60-110E	H70-110XL	H110-150F	H135-155XL	H150-250E	H150-275H	H25-40XM
NA	1	1	1	1	1	1	1	1	1	1	1	1
H45-65XM	H165-280XL	H300-360XL	H300-350B	KE	P40-50A	P60-80A						
1	1	1	1	1	1	1						

MG - REPLACE FUEL PUMP - GAS

S20-30A	S25-35XL	S30-50C	S30-60ES	S40-60XL	S60-100E	S60-100B	S70-120XL	S125-150A	S25-40XM	S45-65XM	S135-155XL	
1	1	1	1	1	1	1	1.5	1				
H20-30E	H25-35XL	H30-60F/H	H40-60H/J	H40-60XL	H60-90C	H60-110E	H70-110XL	H110-150F	H135-155XL	H150-250E	H150-275H	H25-40XM
1	1	1	1	1	1	1	1.5	1	1.5	1	1	1.5
H45-65XM	H165-280XL	H300-360XL	H300-350B	KE	P40-50A	P60-80A						
1.5	NA	NA	NA	1	1	1						

MJ - REPLACE TANK BRACKET - LPG

S20-30A	S25-35XL	S30-50C	S30-60ES	S40-60XL	S60-100E	S60-100B	S70-120XL	S125-150A	S25-40XM	S45-65XM	S135-155XL	
2	2	1	1	1	1	1	1	1	1	1	1	
H20-30E	H25-35XL	H30-60F/H	H40-60H/J	H40-60XL	H60-90C	H60-110E	H70-110XL	H110-150F	H135-155XL	H150-250E	H150-275H	H25-40XM
2	2	1	1	1	1	1	1	1	1.5	1.5	1.5	1
H45-65XM	H165-280XL	H300-360XL	H300-350B	KE	P40-50A	P60-80A						
1	NA	NA	NA	1	1	1						

MK - REPLACE MONOTROL PEDAL*

S20-30A	S25-35XL	S30-50C	S30-60ES	S40-60XL	S60-100E	S60-100B	S70-120XL	S125-150A	S25-40XM	S45-65XM	S135-155XL	
1.5	1.5	1.5	1.5	1.5	1.5	1.5	1.5	1.5	1.5	1.5	1.5	
H20-30E	H25-35XL	H30-60F/H	H40-60H/J	H40-60XL	H60-90C	H60-110E	H70-110XL	H110-150F	H135-155XL	H150-250E	H150-275H	H25-40XM
1.5	1.5	1.5	1.5	1.5	NA	1.5	1.5	1.5	1.5	1.5	1.5	1.5
H45-65XM	H165-280XL	H300-360XL	H300-350B	KE	P40-50A	P60-80A						
1.5	1.5	1.5	1.5	NA	NA	NA						

* .5 TO REPLACE PAD ONLY

MK - REPLACE THROTTLE PEDAL - STANDARD TRANSMISSION

S20-30A	S25-35XL	S30-50C	S30-60ES	S40-60XL	S60-100E	S60-100B	S70-120XL	S125-150A	S25-40XM	S45-65XM	S135-155XL	
1.5	1	1.5	1	NA	1	1.5	1	1.5	NA	NA	1	
H20-30E	H25-35XL	H30-60F/H	H40-60H/J	H40-60XL	H60-90C	H60-110E	H70-110XL	H110-150F	H135-155XL	H150-250E	H150-275H	H25-40XM
1.5	1.5	1	1	NA	1.5	1.5	1	1.5	1.5	1.5	1.5	NA
H45-65XM	H165-280XL	H300-360XL	H300-350B	KE	P40-50A	P60-80A						
NA	NA	NA	1.5	1	1	1						

MK - REPLACE THROTTLE PEDAL - FWD/REV LEVER - POWERSHIFT TRANSMISSION

S20-30A	S25-35XL	S30-50C	S30-60ES	S40-60XL	S60-100E	S60-100B	S70-120XL	S125-150A	S25-40XM	S45-65XM	S135-155XL	
1	1	1	1	1	1	1	1	1	1	1	1	
H20-30E	H25-35XL	H30-60F/H	H40-60H/J	H40-60XL	H60-90C	H60-110E	H70-110XL	H110-150F	H135-155XL	H150-250E	H150-275H	H25-40XM
1	1	1	1	1	1	1	1	1	1	1	1	1
H45-65XM	H165-280XL	H300-360XL	H300-350B	KE	P40-50A	P60-80A						
1	1.5	1.5	1.5	NA	NA	NA						

MP - REPLACE INJECTOR PUMP - DIESEL

S20-30A	S25-35XL	S30-50C	S30-60ES	S40-60XL	S60-100E	S60-100B	S70-120XL	S125-150A	S25-40XM	S45-65XM	S135-155XL	
NA	NA	3	3	3	3	3	3	3	3	3	3	
H20-30E	H25-35XL	H30-60F/H	H40-60H/J	H40-60XL	H60-90C	H60-110E	H70-110XL	H110-150F	H135-155XL	H150-250E	H150-275H	H25-40XM
NA	NA	3	3	3	3	3	3	3	3	3	3	3
H45-65XM	H165-280XL	H300-360XL	H300-350B	KE	P40-50A	P60-80A						
3	3	3	3	3	3	3						

MT - REPLACE VAPORIZER - LPG

S20-30A	S25-35XL	S30-50C	S30-60ES	S40-60XL	S60-100E	S60-100B	S70-120XL	S125-150A	S25-40XM	S45-65XM	S135-155XL	
1.5	1.5	1.5	1.5	1.5	1.5	1.5	1.5	1.5	1.5	1.5	1.5	
H20-30E	H25-35XL	H30-60F/H	H40-60H/J	H40-60XL	H60-90C	H60-110E	H70-110XL	H110-150F	H135-155XL	H150-250E	H150-275H	H25-40XM
1.5	1.5	1.5	1.5	1.5	1.5	1.5	1.5	1.5	1.5	1.5	1.5	1.5
H45-65XM	H165-280XL	H300-360XL	H300-350B	KE	P40-50A	P60-80A						
1.5	NA	NA	NA	1.5	1.5	1.5						

MT - REBUILD VAPORIZER - LPG

S20-30A	S25-35XL	S30-50C	S30-60ES	S40-60XL	S60-100E	S60-100B	S70-120XL	S125-150A	S25-40XM	S45-65XM	S135-155XL	
2	2	2	2	2	2	2	2	2	2	2	2	
H20-30E	H25-35XL	H30-60F/H	H40-60H/J	H40-60XL	H60-90C	H60-110E	H70-110XL	H110-150F	H135-155XL	H150-250E	H150-275H	H25-40XM
2	2	2	2	2	2	2	2	2	2	2	2	2
H45-65XM	H165-280XL	H300-360XL	H300-350B	KE	P40-50A	P60-80A						
2	NA	NA	NA	2	2	2						

MU - REPLACE THROTTLE CABLE - STANDARD TRANSMISSION

S20-30A	S25-35XL	S30-50C	S30-60ES	S40-60XL	S60-100E	S60-100B	S70-120XL	S125-150A	S25-40XM	S45-65XM	S135-155XL	
1	NA	1	1	NA	1	1	NA	1	NA	NA	1.5	
H20-30E	H25-35XL	H30-60F/H	H40-60H/J	H40-60XL	H60-90C	H60-110E	H70-110XL	H110-150F	H135-155XL	H150-250E	H150-275H	H25-40XM
1	NA	1	1	NA	1	1	1	1	1	1	1	NA
H45-65XM	H165-280XL	H300-360XL	H300-350B	KE	P40-50A	P60-80A						
NA	NA	NA	1.5	1	1	1						

MU - REPLACE THROTTLE CABLE - FWD/REV LEVER POWERSHIFT TRANSMISSION

S20-30A	S25-35XL	S30-50C	S30-60ES	S40-60XL	S60-100E	S60-100B	S70-120XL	S125-150A	S25-40XM	S45-65XM	S135-155XL	
1	1	1	1	1	1	1	1	1	1.5	1.5	1.5	
H20-30E	H25-35XL	H30-60F/H	H40-60H/J	H40-60XL	H60-90C	H60-110E	H70-110XL	H110-150F	H135-155XL	H150-250E	H150-275H	H25-40XM
1	1	1	1	1	1	1	1	1	1	1	1	1.5
H45-65XM	H165-280XL	H300-360XL	H300-350B	KE	P40-50A	P60-80A						
1.5	1.5	1.5	1.5	NA	NA	NA						

ELECTRIC LIFT TRUCKS

COMPONENT SECTION **PAGE**

TRANSMISSION AND DRIVE AXLE E-01

HYDRAULIC SYSTEM E-03

TILT CYLINDERS E-05

STEERING E-07

BRAKE SYSTEM E-11

CONTROL PANEL E-13

MOTORS E-15

This page left intentionally blank

TRANSMISSION and DRIVE AXLE

JOB DESCRIPTION	JOB CODE
OVERHAUL TRANSMISSION	DA
OVERHAUL FINAL DRIVE WHEEL HUB	DB
OVERHAUL DIFFERENTIAL	DC

DA - OVERHAUL TRANSMISSION

INCLUDES LABOR TO REMOVE UPRIGHT AND DRIVE TRAIN FROM UNIT, PULL AXLES, SEPARATE TRANSMISSION FROM DIFFERENTIAL HOUSING, DISASSEMBLE, INSPECT, REPLACE WORN PARTS, REASSEMBLE AND ADJUST AND INSTALL BACK IN UNIT. INCLUDES RING GEAR AND PINION ADJUSTMENTS.

A20 30XL													
22													
E20-30AS	**E20-30BS**	**E25-35XL**	**E30-60AC**	**E30-60AS**	**E30-60BC**	**E30-60BS**	**E40-60XL**	**E60-100AS**	**E60-120BS**	**E70-120XL**	**E30-50ER**	**E30-50FR**	**E45 65XM**
22	22	22	22	22	22	22	22	22	22	22	22	22	22
J25-35AS	**J25-35B**	**J40-60AS**	**J40-60XL**	**J30-40XMT**	**J40 60XM**								
22	22	22	22	23	22								

DB - OVERHAUL FINAL DRIVE WHEEL HUB

INCLUDES LABOR TO REMOVE HUB, DISASSEMBLE, INSPECT, REPLACE WORN PARTS, REPACK BEARINGS, REPLACE SEALS, INSTALL AND ADJUST BEARINGS. INCLUDES LABOR TO REMOVE AXLE AND BEARING, INSPECT AND REPLACE IF NECESSARY ON UNITS USING OUTBOARD FINAL DRIVE GEAR REDUCTION.

A20 30XL													
22													
E20-30AS	**E20-30BS**	**E25-35XL**	**E30-60AC**	**E30-60AS**	**E30-60BC**	**E30-60BS**	**E40-60XL**	**E60-100AS**	**E60-120BS**	**E70-120XL**	**E30-50ER**	**E30-50FR**	**E45 65XM**
22	22	22	22	22	22	22	22	22	22	22	NA	NA	NA
J25-35AS	**J25-35B**	**J40-60AS**	**J40-60XL**	**J30-40XMT**	**J40 60XM**								
22	22	22	22	NA	NA								

DC - OVERHAUL DIFFERENTIAL

INCLUDES LABOR TO REMOVE UPRIGHT AND DRIVE TRAIN, PULL AXLES, SEPARATE TRANSMISSION FROM DIFFERENTIAL HOUSING, REMOVE RING GEAR AND DIFFERENTIAL, DISASSEMBLE, INSPECT AND REPLACE PARTS AS NECESSARY, REASSEMBLE, ADJUST DIFFERENTIAL CARRIER BEARINGS AND RING GEAR BACKLASH AND INSTALL BACK IN UNIT.

A20 30XL													
22													
E20-30AS	**E20-30BS**	**E25-35XL**	**E30-60AC**	**E30-60AS**	**E30-60BC**	**E30-60BS**	**E40-60XL**	**E60-100AS**	**E60-120BS**	**E70-120XL**	**E30-50ER**	**E30-50FR**	**E45 65XM**
22	22	22	22	22	22	22	22	22	22	22	NA	NA	24
J25-35AS	**J25-35B**	**J40-60AS**	**J40-60XL**	**J30-40XMT**	**J40 60XM**								
22	22	22	22	6*	24								

*EACH SIDE

HYDRAULIC SYSTEM

JOB DESCRIPTION	JOB CODE
REPAIR HYDRAULIC CONTROL VALVE	EA
REPLACE HYDRAULIC OIL AND FILTER	EC
REPLACE MAIN HYDRAULIC PUMP	EH

EA - REPAIR HYDRAULIC CONTROL VALVE

INCLUDES LABOR TO REMOVE, DISASSEMBLE, INSPECT, POLISH SPOOLS AND BORES, REPLACE ALL SEALS, ASSEMBLE, INSTALL, ADJUST LINKAGES AND ADJUST RELIEF VALVE.

A20 30XL													
3													
4													
5													
E20-30AS	E20-30BS	E25-35XL	E30-60AC	E30-60AS	E30-60BC	E30-60BS	E40-60XL	E60-100AS	E60-120BS	E70-120XL	E30-50ER	E30-50FR	E45 65XM
NA	NA	3	3	NA	3	NA	3	NA	NA	3	3	3	3
6	5	4	4	5	4	4.5	4	5	4.5	4	4	4	4
7	6	5	5	6	5	5	5	6	5	5	5	5	5
J25-35AS	J25-35B	J40-60AS	J40-60XL	J30-40XMT	J40 60XM								
3	3	3	3	3	3								
4	4	4	4	4	4								
4.5	5	4.5	5	5	5								

\+ 2-W
\# 3-W
& 4-W

EC - REPLACE HYDRAULIC OIL AND FILTER

A20 30XL													
1.5													
E20-30AS	E20-30BS	E25-35XL	E30-60AC	E30-60AS	E30-60BC	E30-60BS	E40-60XL	E60-100AS	E60-120BS	E70-120XL	E30-50ER	E30-50FR	E45 65XM
1.5	1.5	1.5	1.5	1.5	1.5	1.5	1.5	1.5	1.5	1.5	1.5	1.5	1.5
J25-35AS	J25-35B	J40-60AS	J40-60XL	J30-40XMT	J40 60XM								
1.5	1.5	1.5	1.5	1.5	1.5								

EH - REPLACE MAIN HYDRAULIC PUMP

INCLUDES LABOR TO CHECK AND ADJUST RELIEF PRESSURE.

A20 30XL													
4													
E20-30AS	E20-30BS	E25-35XL	E30-60AC	E30-60AS	E30-60BC	E30-60BS	E40-60XL	E60-100AS	E60-120BS	E70-120XL	E30-50ER	E30-50FR	E45 65XM
5	5	4	4	6	4	6	4	6	6	5	3	3	4
J25-35AS	J25-35B	J40-60AS	J40-60XL	J30-40XMT	J40 60XM								
3	3	3	4	3	4								

TILT CYLINDERS

JOB DESCRIPTION	JOB CODE
REPACK TILT CYLINDER (ONE)	FA
REPLACE TILT CYLINDER (ONE)	FB

FA - REPACK TILT CYLINDER (ONE)

INCLUDES LABOR TO REPLACE PISTON AND ROD PACKING AND SEALS IN ONE CYLINDER WITHOUT REMOVING CYLINDER

A20 30XL													
2													
E20-30AS	E20-30BS	E25-35XL	E30-60AC	E30-60AS	E30-60BC	E30-60BS	E40-60XL	E60-100AS	E60-120BS	E70-120XL	E30-50ER	E30-50FR	E45 65XM
2	2	2	2	2	2	2	2	2	2	2	2	2	2
J25-35AS	J25-35B	J40-60AS	J40-60XL	J30-40XMT	J40 60XM								
2	2	2	2	2	2								

FB - REPLACE TILT CYLINDER (ONE)

A20 30XL													
1.5													
E20-30AS	E20-30BS	E25-35XL	E30-60AC	E30-60AS	E30-60BC	E30-60BS	E40-60XL	E60-100AS	E60-120BS	E70-120XL	E30-50ER	E30-50FR	E45 65XM
1.5	1.5	1.5	1.5	1.5	1.5	1.5	1.5	1.5	1.5	1.5	1.5	1.5	1.5
J25-35AS	J25-35B	J40-60AS	J40-60XL	J30-40XMT	J40 60XM								
1.5	1.5	1.5	1.5	1.5	1.5								

STEERING

JOB DESCRIPTION	JOB CODE
REBUILD STEERING AXLE	GA
REPLACE STEERING HAND PUMP	GC
REPACK STEERING CYLINDER	GD
REPLACE STEERING CYLINDER	GH
REPLACE STEERING PUMP	GJ

GA - REBUILD STEERING AXLE

INCLUDES LABOR TO REPLACE KING PINS AND BEARINGS, INSPECT ROD ENDS AND REPLACE AS NECESSARY, REPACK WHEEL BEARINGS AND ADJUST (POWER STEERING ONLY). DOES NOT INCLUDE AXLE REMOVAL OR REPACKING STEER CYLINDER.

A20 30XL													
4													
E20-30AS	E20-30BS	E25-35XL	E30-60AC	E30-60AS	E30-60BC	E30-60BS	E40-60XL	E60-100AS	E60-120BS	E70-120XL	E30-50ER	E30-50FR	E45 65XM
4	4	5	5	5	5	5	5	5	5	5	6	6	6
J25-35AS	J25-35B	J40-60AS	J40-60XL	J30-40XMT	J40 60XM								
NA	5	5	5	6	6								

* ADD 3 HOURS IF NECESSARY TO REMOVE AXLE.

GC - REPLACE STEERING HAND PUMP

A20 30XL													
2.5													
E20-30AS	E20-30BS	E25-35XL	E30-60AC	E30-60AS	E30-60BC	E30-60BS	E40-60XL	E60-100AS	E60-120BS	E70-120XL	E30-50ER	E30-50FR	E45 65XM
2.5	2.5	2.5	2.5	2.5	2.5	2.5	2.5	2.5	2.5	2.5	NA	NA	3
J25-35AS	J25-35B	J40-60AS	J40-60XL	J30-40XMT	J40 60XM								
2.5	2.5	2.5	3	3	3								

GD - REPACK STEERING CYLINDER IN TRUCK

A20 30XL													
NA													
E20-30AS	E20-30BS	E25-35XL	E30-60AC	E30-60AS	E30-60BC	E30-60BS	E40-60XL	E60-100AS	E60-120BS	E70-120XL	E30-50ER	E30-50FR	E45 65XM
6	6	6	6	6	6	6	6	6	6	6	NA	NA	6
J25-35AS	J25-35B	J40-60AS	J40-60XL	J30-40XMT	J40 60XM								
NA	5	6	6	6	6								

INCLUDES CYLINDER REMOVAL

A20 30XL													
4													
E20-30AS	E20-30BS	E25-35XL	E30-60AC	E30-60AS	E30-60BC	E30-60BS	E40-60XL	E60-100AS	E60-120BS	E70-120XL	E30-50ER	E30-50FR	E45 65XM
8	8	8	8	8	8	8	8	8	8	8	NA	NA	8
J25-35AS	J25-35B	J40-60AS	J40-60XL	J30-40XMT	J40 60XM								
4	4	8	8	8	8								

GH - REPLACE STEERING CYLINDER

A20 30XL													
4													
E20-30AS	E20-30BS	E25-35XL	E30-60AC	E30-60AS	E30-60BC	E30-60BS	E40-60XL	E60-100AS	E60-120BS	E70-120XL	E30-50ER	E30-50FR	E45 65XM
4	4	4	4	4	4	4	4	4	4	4	NA	NA	4
J25-35AS	J25-35B	J40-60AS	J40-60XL	J30-40XMT	J40 60XM								
2	3	4	4	4	4								

GJ - REPLACE STEERING PUMP

A20 30XL													
3													
E20-30AS	E20-30BS	E25-35XL	E30-60AC	E30-60AS	E30-60BC	E30-60BS	E40-60XL	E60-100AS	E60-120BS	E70-120XL	E30-50ER	E30-50FR	E45 65XM
3	3	3	3	3	3	3	3	3	3	3	3	3	3
J25-35AS	J25-35B	J40-60AS	J40-60XL	J30-40XMT	J40 60XM								
3	3	3	3	3	3								

NOTES

BRAKE SYSTEM

JOB DESCRIPTION	JOB CODE
OVERHAUL BRAKE SYSTEM	HA
ADJUST PARKING BRAKE	HB

HA - OVERHAUL BRAKE SYSTEM

INCLUDES LABOR TO INSTALL NEW SHOES AND LINING, WHEEL CYLINDERS AND MASTER CYLINDER. INSPECT AND REPLACE AS NEEDED - ADJUSTERS, BACKING PLATE, PARK BRAKE CABLES OR LINKAGE AND PARK BRAKE SHOES AND LINING. TIGHTEN BACKING PLATE MOUNTING HARDWARE. INSPECT AND REPACK WHEEL BEARINGS, REPLACE SEALS, INSPECT LINES AND FITTINGS AND BLEED SYSTEM. ADJUST BRAKES, PEDAL LINKAGE AND PARK BRAKE CABLES OR LINKAGE. ADD COST OF TURNING DRUMS IF NEEDED.

A20 30XL													
8													
E20-30AS	**E20-30BS**	**E25-35XL**	**E30-60AC**	**E30-60AS**	**E30-60BC**	**E30-60BS**	**E40-60XL**	**E60-100AS**	**E60-120BS**	**E70-120XL**	**E30-50ER**	**E30-50FR**	**E45 65XM**
8	8	8	8	8	8	8	8	8	8	8	7	7	8
J25-35AS	**J25-35B**	**J40-60AS**	**J40-60XL**	**J30-40XMT**	**J40 60XM**								
8	8	8	8	8	8								

HB - ADJUST PARKING BRAKE

INCLUDES LABOR TO ADJUST CABLES AND LINKAGE FOR HAND AND/OR ACTUATED PARK BRAKE.

A20 30XL													
2.5													
E20-30AS	**E20-30BS**	**E25-35XL**	**E30-60AC**	**E30-60AS**	**E30-60BC**	**E30-60BS**	**E40-60XL**	**E60-100AS**	**E60-120BS**	**E70-120XL**	**E30-50ER**	**E30-50FR**	**E45 65XM**
3	3	3	3	3	3	3	3	3	3	3	1.5	1.5	1.5
J25-35AS	**J25-35B**	**J40-60AS**	**J40-60XL**	**J30-40XMT**	**J40 60XM**								
3	3	3	3	1.5	1.5								

CONTROL PANEL

JOB DESCRIPTION	JOB CODE
REPLACE ALL CONTACT TIPS	TC

TC - REPLACE ALL CONTACT TIPS

A20 30XL													
2													
E20-30AS	E20-30BS	E25-35XL	E30-60AC	E30-60AS	E30-60BC	E30-60BS	E40-60XL	E60-100AS	E60-120BS	E70-120XL	E30-50ER	E30-50FR	E45 65XM
2	2	2	2	2	2	2	2	2	2	2	2.5	2.5	2.5
J25-35AS	J25-35B	J40-60AS	J40-60XL	J30-40XMT	J40 60XM								
2	2	2	2	2.5	2.5								

MOTORS

JOB DESCRIPTION	JOB CODE
REBUILD TRACTION MOTOR	UA
REPLACE TRACTION MOTOR BRUSHES	UB
REBUILD HOIST PUMP MOTOR	UE
REPLACE HOIST PUMP MOTOR BRUSHES	UG
REBUILD POWER STEERING MOTOR	UI
REPLACE POWER STEERING MOTOR BRUSHES	UJ

UA - REBUILD TRACTION MOTOR

INCLUDES LABOR TO REMOVE, REBUILD, INSTALL AND ADJUST CONTROLS.

A20 30XL													
6													
E20-30AS	E20-30BS	E25-35XL	E30-60AC	E30-60AS	E30-60BC	E30-60BS	E40-60XL	E60-100AS	E60-120BS	E70-120XL	E30-50ER	E30-50FR	E45 65XM
6	6	7	7	6	7	6	7	6	6	7	8	8	14
J25-35AS	J25-35B	J40-60AS	J40-60XL	J30-40XMT	J40 60XM								
6	7	6	7	6*	14								

*EACH SIDE

UB - REPLACE TRACTION MOTOR BRUSHES

INCLUDES LABOR TO REPLACE AND SEAT BRUSHES AND ADJUST CONTROLS.

A20 30XL													
3													
E20-30AS	E20-30BS	E25-35XL	E30-60AC	E30-60AS	E30-60BC	E30-60BS	E40-60XL	E60-100AS	E60-120BS	E70-120XL	E30-50ER	E30-50FR	E45 65XM
3	3	3	3	3	3	3	3	3	3	3	3	3	3
J25-35AS	J25-35B	J40-60AS	J40-60XL	J30-40XMT	J40 60XM								
3	3	3	3	2*	3								

*EACH SIDE

UE - REBUILD HOIST PUMP MOTOR

INCLUDES LABOR TO REMOVE, REBUILD AND INSTALL.

A20 30XL													
3.5													
E20-30AS	E20-30BS	E25-35XL	E30-60AC	E30-60AS	E30-60BC	E30-60BS	E40-60XL	E60-100AS	E60-120BS	E70-120XL	E30-50ER	E30-50FR	E45 65XM
3	3	3.5	3.5	3	3.5	3	3.5	3	3	3.5	4	4	4
J25-35AS	J25-35B	J40-60AS	J40-60XL	J30-40XMT	J40 60XM								
4	4	4	4	4	4								

UF - REPLACE HOIST PUMP MOTOR BRUSHES

INCLUDES LABOR TO REPLACE AND SEAT BRUSHES.

A20 30XL													
2													
E20-30AS	E20-30BS	E25-35XL	E30-60AC	E30-60AS	E30-60BC	E30-60BS	E40-60XL	E60-100AS	E60-120BS	E70-120XL	E30-50ER	E30-50FR	E45 65XM
1.5	1.5	2	2	1.5	2	1.5	2	1.5	1.5	2	2	2	2
J25-35AS	J25-35B	J40-60AS	J40-60XL	J30-40XMT	J40 60XM								
2	2	2	2	2	2								

UI - REBUILD POWER STEERING MOTOR

INCLUDES LABOR TO REMOVE, REBUILD AND INSTALL.

A20 30XL													
3													
E20-30AS	E20-30BS	E25-35XL	E30-60AC	E30-60AS	E30-60BC	E30-60BS	E40-60XL	E60-100AS	E60-120BS	E70-120XL	E30-50ER	E30-50FR	E45 65XM
3	3	3	3	3	3	3	3	3	3	3	4	4	5
J25-35AS	J25-35B	J40-60AS	J40-60XL	J30-40XMT	J40 60XM								
3	3	3	3	4	5								

UJ - REPLACE POWER STEERING MOTOR BRUSHES

INCLUDES LABOR TO REPLACE AND SEAT BRUSHES.

A20 30XL													
2													
E20-30AS	E20-30BS	E25-35XL	E30-60AC	E30-60AS	E30-60BC	E30-60BS	E40-60XL	E60-100AS	E60-120BS	E70-120XL	E30-50ER	E30-50FR	E45 65XM
2	2	2	2	2	2	2	2	2	2	2	2	2	2.5
J25-35AS	J25-35B	J40-60AS	J40-60XL	J30-40XMT	J40 60XM								
2	2	2	2	2.5	2.5								

NOTES

MODIFICATIONS

JOB DESCRIPTION	PAGE
CONVERT TO LPG	M-01
EXCHANGE AND RESHIM CARRIAGES BETWEEN UNITS	M-01
EXCHANGE AND RESHIM CARRIAGE WITH NON-INSTALLED CARRIAGE	M-01
REMOVE STANDARD LOAD ARM CARRIAGE AND INSTALL AND SHIM INTEGRAL SIDE-SHIFT CARRIAGE	M-02
EXCHANGE LOAD ARMS	M-02
EXCHANGE UPRIGHTS BETWEEN TWO TRUCKS	M-02
EXCHANGE UPRIGHT WITH NON-INSTALLED UPRIGHT	M-03
INSTALL UPRIGHT ON BASIC TRUCK	M-03
INSTALL BACK TILT LIMITERS	M-03
ADD AUXILIARY VALVE AND HOSE GROUP	M-04
REMOVE AUXILIARY VALVE AND HOSE GROUP	M-04
INSTALL "HANG-ON" SIDESHIFT	M-04
INSTALL COTTON OR CARTON CLAMP	M-05
INSTALL REVOLVING PAPER ROLL CLAMP	M-05
INSTALL PUSH/PULL ATTACHMENT	M-05
INSTALL FORGING CLAMP	M-06
INSTALL FORK POSITIONER	M-06
INSTALL CATALYTIC EXHAUST SYSTEM	M-06
INSTALL OVERHEAD AIR CLEANER	M-07
INSTALL AIR STARTER	M-07
INSTALL DIRECT READING GAUGES	M-07
INSTALL HEADLIGHTS (2)	M-07
INSTALL STOP LIGHT	M-08
INSTALL ROTATING LIGHT	M-08
INSTALL BACK-UP ALARM	M-08
INSTALL COLUMN MOUNTED FORWARD/REVERSE CONTROL	M-09
CONVERT FROM SINGLE TO DUAL DRIVE TIRES	M-09
CONVERT FROM DUAL DRIVE TO SINGLE DRIVE TIRES	M-09
SWAP DRIVE TIRES (DUALS)	M-09
SWAP DRIVE TIRES (SINGLES)	M-10
INSTALL WEIGHT INDICATOR	M-10

CONVERT TO LPG

S20-30A	S25-35XL	S30-50C	S30-60ES	S40-60XL	S60-100E	S60-100B	S70-120XL	S125-150A	S25-40XM	S45-65XM	S135-155XL		
6	6	6	6	6	6	6	6	6	6	6	8		
H20-30E	H25-35XL	H30-60F/H	H40-60H/J	H40-60XL	H60-90C	H60-110E	H70-110XL	H110-150F	H135-155XL	H150-250E	H150-275H	H25-40XM	
6	6	6	6	6	6	6	6	8	8	8	8	6	
H45-65XM	H165-280XL	H300-360XL	H300-350B	KE	P40-50A	P60-80A							
6	NA	NA	NA	6	6	6							

EXCHANGE AND RESHIM CARRIAGES BETWEEN UNITS

S20-30A	S25-35XL	S30-50C	S30-60ES	S40-60XL	S60-100E	S60-100B	S70-120XL	S125-150A	S25-40XM	S45-65XM	S135-155XL		
3	3	3	3	3	3	3	3	3	5	5	6		
H20-30E	H25-35XL	H30-60F/H	H40-60H/J	H40-60XL	H60-90C	H60-110E	H70-110XL	H110-150F	H135-155XL	H150-250E	H150-275H	H25-40XM	
3	3	3	3	3	3	3	3	4	4	5	5	5	
H45-65XM	H165-280XL	H300-360XL	H300-350B	KE	P40-50A	P60-80A							
5	6.5	6.5	6.5	NA	3	3							
A20 30XL													
3													
E20-30AS	E20-30BS	E25-35XL	E30-60AC	E30-60AS	E30-60BC	E30-60BS	E40-60XL	E60-100AS	E60-120BS	E70-120XL	E30-50ER	E30-50FR	E45 65XM
3	3	3	3	3	3	3	3	3	3	3	5	4.5	4.5
J25-35AS	J25-35B	J40-60AS	J40-60XL	J30-40XMT	J40 60XM								
3	3	3	3	4.5	4.5								

EXCHANGE AND RESHIM CARRIAGE WITH NON-INSTALLED CARRIAGE

S20-30A	S25-35XL	S30-50C	S30-60ES	S40-60XL	S60-100E	S60-100B	S70-120XL	S125-150A	S25-40XM	S45-65XM	S135-155XL		
3	3	3	3	3	3	3	3	3	4.5	4.5	5		
H20-30E	H25-35XL	H30-60F/H	H40-60H/J	H40-60XL	H60-90C	H60-110E	H70-110XL	H110-150F	H135-155XL	H150-250E	H150-275H	H25-40XM	
3	3	3	3	3	3	3	3	3	4	4	4	4.5	
H45-65XM	H165-280XL	H300-360XL	H300-350B	KE	P40-50A	P60-80A							
4.5	6	6.5	6.5	NA	3	3							
A20 30XL													
3													
E20-30AS	E20-30BS	E25-35XL	E30-60AC	E30-60AS	E30-60BC	E30-60BS	E40-60XL	E60-100AS	E60-120BS	E70-120XL	E30-50ER	E30-50FR	E45 65XM
3	3	3	3	3	3	3	3	3	3	3	4.5	4.5	4.5
J25-35AS	J25-35B	J40-60AS	J40-60XL	J30-40XMT	J40 60XM								
3	3	3	3	4.5	4.5								

REMOVE STANDARD LOAD ARM CARRIAGE AND INSTALL AND SHIM INTEGRAL SIDE-SHIFT CARRIAGE

DOES NOT INCLUDE VALVE AND HEADER HOIST ARRANGEMENT.

S20-30A	S25-35XL	S30-50C	S30-60ES	S40-60XL	S60-100E	S60-100B	S70-120XL	S125-150A	S25-40XM	S45-65XM	S135-155XL		
4	4	4	4	4	4	4	4	4	6	6	7		
H20-30E	H25-35XL	H30-60F/H	H40-60H/J	H40-60XL	H60-90C	H60-110E	H70-110XL	H110-150F	H135-155XL	H150-250E	H150-275H	H25-40XM	
4	4	4	4	4	4	4	4	4	4	4	4	6	
H45-65XM	H165-280XL	H300-360XL	H300-350B	KE	P40-50A	P60-80A							
6	7	7	7	NA	4	4							
A20 30XL													
4													
E20-30AS	E20-30BS	E25-35XL	E30-60AC	E30-60AS	E30-60BC	E30-60BS	E40-60XL	E60-100AS	E60-120BS	E70-120XL	E30-50ER	E30-50FR	E45 65XM
4	4	4	4	4	4	4	4	4	4	4	6	6	6
J25-35AS	J25-35B	J40-60AS	J40-60XL	J30-40XMT	J40 60XM								
4	4	4	4	6	6								

EXCHANGE LOAD ARMS

S20-30A	S25-35XL	S30-50C	S30-60ES	S40-60XL	S60-100E	S60-100B	S70-120XL	S125-150A	S25-40XM	S45-65XM	S135-155XL		
1	1	1	1	1	1	1	1	1	1	1	2		
H20-30E	H25-35XL	H30-60F/H	H40-60H/J	H40-60XL	H60-90C	H60-110E	H70-110XL	H110-150F	H135-155XL	H150-250E	H150-275H	H25-40XM	
1	1	1	1	1	1	1	1	2	2	2	2	1	
H45-65XM	H165-280XL	H300-360XL	H300-350B	KE	P40-50A	P60-80A							
1	2	2	2	NA	1	1							
A20 30XL													
1													
E20-30AS	E20-30BS	E25-35XL	E30-60AC	E30-60AS	E30-60BC	E30-60BS	E40-60XL	E60-100AS	E60-120BS	E70-120XL	E30-50ER	E30-50FR	E45 65XM
1	1	1	1	1	1	1	1	1	1	1	1	1	1
J25-35AS	J25-35B	J40-60AS	J40-60XL	J30-40XMT	J40 60XM								
1	1	1	1	1	1	1							

EXCHANGE UPRIGHTS BETWEEN TWO TRUCKS

DOES NOT INCLUDE HEADER HOSE ARRANGEMENT.

S20-30A	S25-35XL	S30-50C	S30-60ES	S40-60XL	S60-100E	S60-100B	S70-120XL	S125-150A	S25-40XM	S45-65XM	S135-155XL		
7	7	7	8	8	8	8	8	10	5.5	5.5	7		
H20-30E	H25-35XL	H30-60F/H	H40-60H/J	H40-60XL	H60-90C	H60-110E	H70-110XL	H110-150F	H135-155XL	H150-250E	H150-275H	H25-40XM	
7	7	8	8	8	7	8	8	8	8	8	8	5.5	
H45-65XM	H165-280XL	H300-360XL	H300-350B	KE	P40-50A	P60-80A							
5.5	8	8	8	NA	8	8							
A20 30XL													
7													
E20-30AS	E20-30BS	E25-35XL	E30-60AC	E30-60AS	E30-60BC	E30-60BS	E40-60XL	E60-100AS	E60-120BS	E70-120XL	E30-50ER	E30-50FR	E45 65XM
7	7	7	7	7	7	7	7	7	7	7	5	5	5
J25-35AS	J25-35B	J40-60AS	J40-60XL	J30-40XMT	J40 60XM								
7	7	7	7	5	5								

EXCHANGE UPRIGHT WITH NON-INSTALLED UPRIGHT

DOES NOT INCLUDE HEADER HOSE ARRANGEMENT

S20-30A	S25-35XL	S30-50C	S30-60ES	S40-60XL	S60-100E	S60-100B	S70-120XL	S125-150A	S25-40XM	S45-65XM	S135-155XL		
6	6	6	6	6	6	6	6	6	5	5	7		
H20-30E	H25-35XL	H30-60F/H	H40-60H/J	H40-60XL	H60-90C	H60-110E	H70-110XL	H110-150F	H135-155XL	H150-250E	H150-275H	H25-40XM	
6	6	6	6	6	6	6	6	6	6	6	6	5	
H45-65XM	H165-280XL	H300-360XL	H300-350B	KE	P40-50A	P60-80A							
5	7	7	7	NA	6	6							
A20 30XL													
6													
E20-30AS	E20-30BS	E25-35XL	E30-60AC	E30-60AS	E30-60BC	E30-60BS	E40-60XL	E60-100AS	E60-120BS	E70-120XL	E30-50ER	E30-50FR	E45 65XM
6	6	6	6	6	6	6	6	6	6	6	5	5	5
J25-35AS	J25-35B	J40-60AS	J40-60XL	J30-40XMT	J40 60XM								
6	6	6	6	5	5								

INSTALL UPRIGHT ON BASIC TRUCK

S20-30A	S25-35XL	S30-50C	S30-60ES	S40-60XL	S60-100E	S60-100B	S70-120XL	S125-150A	S25-40XM	S45-65XM	S135-155XL		
4	4	4	4	4	4	3	4	4	3.5	3.5	4		
H20-30E	H25-35XL	H30-60F/H	H40-60H/J	H40-60XL	H60-90C	H60-110E	H70-110XL	H110-150F	H135-155XL	H150-250E	H150-275H	H25-40XM	
4	4	3	3	3	3.5	3.5	4	4	4	4	4	3.5	
H45-65XM	H165-280XL	H300-360XL	H300-350B	KE	P40-50A	P60-80A							
3.5	5	5	5	NA	4	4							
A20 30XL													
4													
E20-30AS	E20-30BS	E25-35XL	E30-60AC	E30-60AS	E30-60BC	E30-60BS	E40-60XL	E60-100AS	E60-120BS	E70-120XL	E30-50ER	E30-50FR	E45 65XM
4	4	4	4	4	4	4	4	4	4	4	3.5	3.5	3.5
J25-35AS	J25-35B	J40-60AS	J40-60XL	J30-40XMT	J40 60XM								
4	4	4	4	3.5	3.5								

INSTALL BACK TILT LIMITERS

S20-30A	S25-35XL	S30-50C	S30-60ES	S40-60XL	S60-100E	S60-100B	S70-120XL	S125-150A	S25-40XM	S45-65XM	S135-155XL		
2	2	2	2	2	2	2	2	2	2	2	2		
H20-30E	H25-35XL	H30-60F/H	H40-60H/J	H40-60XL	H60-90C	H60-110E	H70-110XL	H110-150F	H135-155XL	H150-250E	H150-275H	H25-40XM	
2	2	2	2	2	2	2	2	2	2	2	2	2	
H45-65XM	H165-280XL	H300-360XL	H300-350B	KE	P40-50A	P60-80A							
2	2	2	2	NA	2	2							
A20 30XL													
2													
E20-30AS	E20-30BS	E25-35XL	E30-60AC	E30-60AS	E30-60BC	E30-60BS	E40-60XL	E60-100AS	E60-120BS	E70-120XL	E30-50ER	E30-50FR	E45 65XM
2	2	2	2	2	2	2	2	2	2	2	2	2	2
J25-35AS	J25-35B	J40-60AS	J40-60XL	J30-40XMT	J40 60XM								
2	2	2	2	2	2								

ADD AUXILIARY VALVE AND HOSE GROUP

INCLUDES VALVE, BRACKETS, LINKAGE, HOSES, SHEAVES, REELS AND JUNCTION BLOCKS.

S20-30A	S25-35XL	S30-50C	S30-60ES	S40-60XL	S60-100E	S60-100B	S70-120XL	S125-150A	S25-40XM	S45-65XM	S135-155XL		
7	8	7	8	8	8	7	8	7	7	7	8		
H20-30E	H25-35XL	H30-60F/H	H40-60H/J	H40-60XL	H60-90C	H60-110E	H70-110XL	H110-150F	H135-155XL	H150-250E	H150-275H	H25-40XM	
7	8	8	8	8	8	8	8	8	8.5	9	9	7	
H45-65XM	H165-280XL	H300-360XL	H300-350B	KE	P40-50A	P60-80A							
7	9	9	9	NA	7	7							
A20 30XL													
8													
E20-30AS	E20-30BS	E25-35XL	E30-60AC	E30-60AS	E30-60BC	E30-60BS	E40-60XL	E60-100AS	E60-120BS	E70-120XL	E30-50ER	E30-50FR	E45 65XM
10	10	8	10	10	10	10	9	10	10	9	7.5	7.5	7.5
J25-35AS	J25-35B	J40-60AS	J40-60XL	J30-40XMT	J40 60XM								
10	10	10	9	7.5	8								

REMOVE AUXILIARY VALVE AND HOSE GROUP

S20-30A	S25-35XL	S30-50C	S30-60ES	S40-60XL	S60-100E	S60-100B	S70-120XL	S125-150A	S25-40XM	S45-65XM	S135-155XL		
3	4.5	3	6	4.5	6	4	4.5	45.5	5.5	5.5	6.5		
H20-30E	H25-35XL	H30-60F/H	H40-60H/J	H40-60XL	H60-90C	H60-110E	H70-110XL	H110-150F	H135-155XL	H150-250E	H150-275H	H25-40XM	
3	4.5	6	6	6	3	5	5	4	5	4	4	5.5	
H45-65XM	H165-280XL	H300-360XL	H300-350B	KE	P40-50A	P60-80A							
5.5	7	7	7	NA	4	4							
A20 30XL													
4													
E20-30AS	E20-30BS	E25-35XL	E30-60AC	E30-60AS	E30-60BC	E30-60BS	E40-60XL	E60-100AS	E60-120BS	E70-120XL	E30-50ER	E30-50FR	E45 65XM
6	6	5	6	6	6	6	5.5	6	6	6	5	5	5.5
J25-35AS	J25-35B	J40-60AS	J40-60XL	J30-40XMT	J40 60XM								
5	5.5	5	6	5.5	5.5								

INSTALL "HANG-ON" SIDESHIFT

S20-30A	S25-35XL	S30-50C	S30-60ES	S40-60XL	S60-100E	S60-100B	S70-120XL	S125-150A	S25-40XM	S45-65XM	S135-155XL		
4	4	4	4	4	4	4	4	4	4	4	4.5		
H20-30E	H25-35XL	H30-60F/H	H40-60H/J	H40-60XL	H60-90C	H60-110E	H70-110XL	H110-150F	H135-155XL	H150-250E	H150-275H	H25-40XM	
4	4	4	4	4	4	4	4	4	4	4	4	4	
H45-65XM	H165-280XL	H300-360XL	H300-350B	KE	P40-50A	P60-80A							
4	6	6	6	NA	5.5	5.5							
A20 30XL													
4													
E20-30AS	E20-30BS	E25-35XL	E30-60AC	E30-60AS	E30-60BC	E30-60BS	E40-60XL	E60-100AS	E60-120BS	E70-120XL	E30-50ER	E30-50FR	E45 65XM
4	4	4	4	4	4	4	4	4	4	4	4	4	4
J25-35AS	J25-35B	J40-60AS	J40-60XL	J30-40XMT	J40 60XM								
4	4	4	4	4	4								

INSTALL COTTON OR CARTON CLAMP

S20-30A	S25-35XL	S30-50C	S30-60ES	S40-60XL	S60-100E	S60-100B	S70-120XL	S125-150A	S25-40XM	S45-65XM	S135-155XL		
3.5	4	3.5	3.5	4	3.5	3.5	4	3.5	4	4	4		
H20-30E	H25-35XL	H30-60F/H	H40-60H/J	H40-60XL	H60-90C	H60-110E	H70-110XL	H110-150F	H135-155XL	H150-250E	H150-275H	H25-40XM	
3.5	4	3.5	4	4	3.5	4	4	NA	4	NA	NA	4	
H45-65XM	H165-280XL	H300-360XL	H300-350B	KE	P40-50A	P60-80A							
4	NA	NA	NA	NA	NA	NA							
A20 30XL													
4													
E20-30AS	E20-30BS	E25-35XL	E30-60AC	E30-60AS	E30-60BC	E30-60BS	E40-60XL	E60-100AS	E60-120BS	E70-120XL	E30-50ER	E30-50FR	E45 65XM
4	4	4	4	4	4	4	4	4	4	4	4	4	4
J25-35AS	J25-35B	J40-60AS	J40-60XL	J30-40XMT	J40 60XM								
4	4	4	4	4	4								

INSTALL REVOLVING PAPER ROLL CLAMP

S20-30A	S25-35XL	S30-50C	S30-60ES	S40-60XL	S60-100E	S60-100B	S70-120XL	S125-150A	S25-40XM	S45-65XM	S135-155XL		
5	5	5	5	5	5	5	5	5	4	4	4		
H20-30E	H25-35XL	H30-60F/H	H40-60H/J	H40-60XL	H60-90C	H60-110E	H70-110XL	H110-150F	H135-155XL	H150-250E	H150-275H	H25-40XM	
5	5	5	5	5	5	5	5	5	5	NA	NA	4	
H45-65XM	H165-280XL	H300-360XL	H300-350B	KE	P40-50A	P60-80A							
4	NA	NA	NA	NA	5	5							
A20 30XL													
5													
E20-30AS	E20-30BS	E25-35XL	E30-60AC	E30-60AS	E30-60BC	E30-60BS	E40-60XL	E60-100AS	E60-120BS	E70-120XL	E30-50ER	E30-50FR	E45 65XM
5	5	5	5	5	5	5	5	5	5	5	4	4	4
J25-35AS	J25-35B	J40-60AS	J40-60XL	J30-40XMT	J40 60XM								
5	5	5	5	4	4								

INSTALL PUSH/PULL ATTACHMENT

S20-30A	S25-35XL	S30-50C	S30-60ES	S40-60XL	S60-100E	S60-100B	S70-120XL	S125-150A	S25-40XM	S45-65XM	S135-155XL		
5	5	5	5	5	5	5	5	5	4	4	4		
H20-30E	H25-35XL	H30-60F/H	H40-60H/J	H40-60XL	H60-90C	H60-110E	H70-110XL	H110-150F	H135-155XL	H150-250E	H150-275H	H25-40XM	
5	5	5	5	5	5	5	5	NA	5	NA	NA	5	
H45-65XM	H165-280XL	H300-360XL	H300-350B	KE	P40-50A	P60-80A							
5	NA	NA	NA	NA	NA	NA							
A20 30XL													
5													
E20-30AS	E20-30BS	E25-35XL	E30-60AC	E30-60AS	E30-60BC	E30-60BS	E40-60XL	E60-100AS	E60-120BS	E70-120XL	E30-50ER	E30-50FR	E45 65XM
5	5	5	5	5	5	5	5	5	5	5	4	4	4
J25-35AS	J25-35B	J40-60AS	J40-60XL	J30-40XMT	J40 60XM								
5	5	5	5	4	4								

INSTALL FORGING CLAMP

S20-30A	S25-35XL	S30-50C	S30-60ES	S40-60XL	S60-100E	S60-100B	S70-120XL	S125-150A	S25-40XM	S45-65XM	S135-155XL		
NA	6	NA	NA	6	NA	NA	6	6	6	6	6		
H20-30E	H25-35XL	H30-60F/H	H40-60H/J	H40-60XL	H60-90C	H60-110E	H70-110XL	H110-150F	H135-155XL	H150-250E	H150-275H	H25-40XM	
NA	6	NA	6	6	6	6	6	6	6	6	6	6	
H45-65XM	H165-280XL	H300-360XL	H300-350B	KE	P40-50A	P60-80A							
6	6.5	6.5	6.5	NA	NA	NA							
A20 30XL													
6													
E20-30AS	E20-30BS	E25-35XL	E30-60AC	E30-60AS	E30-60BC	E30-60BS	E40-60XL	E60-100AS	E60-120BS	E70-120XL	E30-50ER	E30-50FR	E45 65XM
6	6	6	6	6	6	6	6	6	6	6	NA	NA	NA
J25-35AS	J25-35B	J40-60AS	J40-60XL	J30-40XMT	J40 60XM								
6	6	6	6	NA	NA								

INSTALL FORK POSITIONER

S20-30A	S25-35XL	S30-50C	S30-60ES	S40-60XL	S60-100E	S60-100B	S70-120XL	S125-150A	S25-40XM	S45-65XM	S135-155XL		
5	5	5	5	5	5	5	5	5	5	5	6		
H20-30E	H25-35XL	H30-60F/H	H40-60H/J	H40-60XL	H60-90C	H60-110E	H70-110XL	H110-150F	H135-155XL	H150-250E	H150-275H	H25-40XM	
5	5	5	5	5	5	5	6	7	7	7	7	5	
H45-65XM	H165-280XL	H300-360XL	H300-350B	KE	P40-50A	P60-80A							
5	7	7	7	NA	5	5							
A20 30XL													
6													
E20-30AS	E20-30BS	E25-35XL	E30-60AC	E30-60AS	E30-60BC	E30-60BS	E40-60XL	E60-100AS	E60-120BS	E70-120XL	E30-50ER	E30-50FR	E45 65XM
5	5	5	5	5	5	5	5	5	5	5.5	5	5	5
J25-35AS	J25-35B	J40-60AS	J40-60XL	J30-40XMT	J40 60XM								
5	5	5	5	5	5								

INSTALL CATALYTIC EXHAUST SYSTEM

S20-30A	S25-35XL	S30-50C	S30-60ES	S40-60XL	S60-100E	S60-100B	S70-120XL	S125-150A	S25-40XM	S45-65XM	S135-155XL		
9	9	9	9	9	9	9	9	9	9	9	9		
H20-30E	H25-35XL	H30-60F/H	H40-60H/J	H40-60XL	H60-90C	H60-110E	H70-110XL	H110-150F	H135-155XL	H150-250E	H150-275H	H25-40XM	
9	9	9	9	9	9	9	9	9	9	9	9	9	
H45-65XM	H165-280XL	H300-360XL	H300-350B	KE	P40-50A	P60-80A							
9	NA	NA	NA	9	9	9							

INSTALL OVERHEAD AIR CLEANER

S20-30A	S25-35XL	S30-50C	S30-60ES	S40-60XL	S60-100E	S60-100B	S70-120XL	S125-150A	S25-40XM	S45-65XM	S135-155XL		
10	10	10	10	10	10	10	10	10	7.5	7.5	8.5		
H20-30E	H25-35XL	H30-60F/H	H40-60H/J	H40-60XL	H60-90C	H60-110E	H70-110XL	H110-150F	H135-155XL	H150-250E	H150-275H	H25-40XM	
10	10	12	12	12	10	10	10	8	10	NA	NA	7.5	
H45-65XM	H165-280XL	H300-360XL	H300-350B	KE	P40-50A	P60-80A							
7.5	NA	NA	NA	10	10	10							

INSTALL AIR STARTER

S20-30A	S25-35XL	S30-50C	S30-60ES	S40-60XL	S60-100E	S60-100B	S70-120XL	S125-150A	S25-40XM	S45-65XM	S135-155XL		
6	6	6	6	6	6	6	6	6	NA	NA	NA		
H20-30E	H25-35XL	H30-60F/H	H40-60H/J	H40-60XL	H60-90C	H60-110E	H70-110XL	H110-150F	H135-155XL	H150-250E	H150-275H	H25-40XM	
6	6	6	6	6	6	6	6	6	6	6	6	NA	
H45-65XM	H165-280XL	H300-360XL	H300-350B	KE	P40-50A	P60-80A							
NA	6	6	6	6	6	6							

INSTALL DIRECT READING GAUGES

S20-30A	S25-35XL	S30-50C	S30-60ES	S40-60XL	S60-100E	S60-100B	S70-120XL	S125-150A	S25-40XM	S45-65XM	S135-155XL		
4	4	4	4	4	4	4	4	4	4	4	4		
H20-30E	H25-35XL	H30-60F/H	H40-60H/J	H40-60XL	H60-90C	H60-110E	H70-110XL	H110-150F	H135-155XL	H150-250E	H150-275H	H25-40XM	
4	4	4	4	4	4	4	4	4	4	4	4	4	
H45-65XM	H165-280XL	H300-360XL	H300-350B	KE	P40-50A	P60-80A							
4	4	4	4	4	4	4							

INSTALL HEADLIGHTS (2)

S20-30A	S25-35XL	S30-50C	S30-60ES	S40-60XL	S60-100E	S60-100B	S70-120XL	S125-150A	S25-40XM	S45-65XM	S135-155XL		
4	4	4	4	4	4	4	4	4	3.5	3.5	4		
H20-30E	H25-35XL	H30-60F/H	H40-60H/J	H40-60XL	H60-90C	H60-110E	H70-110XL	H110-150F	H135-155XL	H150-250E	H150-275H	H25-40XM	
4	4	4	4	4	4	4	4	4	4	4	4	3.5	
H45-65XM	H165-280XL	H300-360XL	H300-350B	KE	P40-50A	P60-80A							
3.5	4	4	4	4	4	4							
A20 30XL													
4													
E20-30AS	E20-30BS	E25-35XL	E30-60AC	E30-60AS	E30-60BC	E30-60BS	E40-60XL	E60-100AS	E60-120BS	E70-120XL	E30-50ER	E30-50FR	E45 65XM
4	4	4	4	4	4	4	4	4	4	4	4	4	4
J25-35AS	J25-35B	J40-60AS	J40-60XL	J30-40XMT	J40 60XM								
4	4	4	4	4	4								

INSTAL STOP LIGHT

S20-30A	S25-35XL	S30-50C	S30-60ES	S40-60XL	S60-100E	S60-100B	S70-120XL	S125-150A	S25-40XM	S45-65XM	S135-155XL		
2.5	2.5	2.5	2.5	2.5	2.5	2.5	2.5	2.5	2.5	2.5	2.5		
H20-30E	H25-35XL	H30-60F/H	H40-60H/J	H40-60XL	H60-90C	H60-110E	H70-110XL	H110-150F	H135-155XL	H150-250E	H150-275H	H25-40XM	
2.5	2.5	2.5	2.5	2.5	2.5	2.5	2.5	2.5	2.5	2.5	2.5	2.5	
H45-65XM	H165-280XL	H300-360XL	H300-350B	KE	P40-50A	P60-80A							
2.5	2.5	2.5	2.5	2.5	2.5	2.5							
A20 30XL													
2.5													
E20-30AS	E20-30BS	E25-35XL	E30-60AC	E30-60AS	E30-60BC	E30-60BS	E40-60XL	E60-100AS	E60-120BS	E70-120XL	E30-50ER	E30-50FR	E45 65XM
2.5	2.5	2.5	2.5	2.5	2.5	2.5	2.5	2.5	2.5	2.5	2.5	2.5	2.5
J25-35AS	J25-35B	J40-60AS	J40-60XL	J30-40XMT	J40 60XM								
2.5	2.5	2.5	2.5	2.5	2.5								

INSTALL ROTATING LIGHT

S20-30A	S25-35XL	S30-50C	S30-60ES	S40-60XL	S60-100E	S60-100B	S70-120XL	S125-150A	S25-40XM	S45-65XM	S135-155XL		
2	2	2	2	2	2	2	2	2	2.5	2.5	2.5		
H20-30E	H25-35XL	H30-60F/H	H40-60H/J	H40-60XL	H60-90C	H60-110E	H70-110XL	H110-150F	H135-155XL	H150-250E	H150-275H	H25-40XM	
2	2	2	2	2	2	2	2	2	2	2	2	2.5	
H45-65XM	H165-280XL	H300-360XL	H300-350B	KE	P40-50A	P60-80A							
2.5	2.5	2.5	2.5	2	2	2							
A20 30XL													
3													
E20-30AS	E20-30BS	E25-35XL	E30-60AC	E30-60AS	E30-60BC	E30-60BS	E40-60XL	E60-100AS	E60-120BS	E70-120XL	E30-50ER	E30-50FR	E45 65XM
3	3	3	3	3	3	3	3	3	3	3	2.5	2.5	2.5
J25-35AS	J25-35B	J40-60AS	J40-60XL	J30-40XMT	J40 60XM								
3	3	3	3	2.5	2.5								

INSTALL BACK-UP ALARM

S20-30A	S25-35XL	S30-50C	S30-60ES	S40-60XL	S60-100E	S60-100B	S70-120XL	S125-150A	S25-40XM	S45-65XM	S135-155XL		
5	5	5	5	5	5	5	5	5	5	5	5		
H20-30E	H25-35XL	H30-60F/H	H40-60H/J	H40-60XL	H60-90C	H60-110E	H70-110XL	H110-150F	H135-155XL	H150-250E	H150-275H	H25-40XM	
5	5	5	5	5	5	5	5	5	5	5	5	5	
H45-65XM	H165-280XL	H300-360XL	H300-350B	KE	P40-50A	P60-80A							
5	5	5	5	5	5	5							
A20 30XL													
4													
E20-30AS	E20-30BS	E25-35XL	E30-60AC	E30-60AS	E30-60BC	E30-60BS	E40-60XL	E60-100AS	E60-120BS	E70-120XL	E30-50ER	E30-50FR	E45 65XM
4	4	4	4	4	4	4	4	4	4	4	4	4	4
J25-35AS	J25-35B	J40-60AS	J40-60XL	J30-40XMT	J40 60XM								
4	4	4	4	4	4								

INSTALL COLUMN-MOUNTED FORWARD/REVERSE CONTROL

S20-30A	S25-35XL	S30-50C	S30-60ES	S40-60XL	S60-100E	S60-100B	S70-120XL	S125-150A	S25-40XM	S45-65XM	S135-155XL		
8	8	8	8	8	8	8	8	NA	8	8	8		
H20-30E	H25-35XL	H30-60F/H	H40-60H/J	H40-60XL	H60-90C	H60-110E	H70-110XL	H110-150F	H135-155XL	H150-250E	H150-275H	H25-40XM	
8	8	8	8	NA	NA	8	8	NA	9	10	NA	8	
H45-65XM	H165-280XL	H300-360XL	H300-350B	KE	P40-50A	P60-80A							
8	NA	NA	NA	NA	NA	NA							
A20 30XL													
8													
E20-30AS	E20-30BS	E25-35XL	E30-60AC	E30-60AS	E30-60BC	E30-60BS	E40-60XL	E60-100AS	E60-120BS	E70-120XL	E30-50ER	E30-50FR	E45 65XM
8	8	8	8	8	8	8	8	8	8	8	NA	NA	8
J25-35AS	J25-35B	J40-60AS	J40-60XL	J30-40XMT	J40 60XM								
8	8	8	8	8	8								

CONVERT FROM SINGLE TO DUAL DRIVE TIRES

S20-30A	S25-35XL	S30-50C	S30-60ES	S40-60XL	S60-100E	S60-100B	S70-120XL	S125-150A	S25-40XM	S45-65XM	S135-155XL		
NA	NA	NA	NA	NA	NA	NA	NA	NA	NA	NA	NA		
H20-30E	H25-35XL	H30-60F/H	H40-60H/J	H40-60XL	H60-90C	H60-110E	H70-110XL	H110-150F	H135-155XL	H150-250E	H150-275H	H25-40XM	
NA	7	25	25	7	28	28	25	NA	25	NA	NA	7	
H45-65XM	H165-280XL	H300-360XL	H300-350B	KE	P40-50A	P60-80A							
7	NA	NA	NA	NA	NA	NA							

CONVERT FROM DUAL DRIVE TO SINGLE DRIVE TIRES

S20-30A	S25-35XL	S30-50C	S30-60ES	S40-60XL	S60-100E	S60-100B	S70-120XL	S125-150A	S25-40XM	S45-65XM	S135-155XL		
NA	NA	NA	NA	NA	NA	NA	NA	NA	NA	NA	NA		
H20-30E	H25-35XL	H30-60F/H	H40-60H/J	H40-60XL	H60-90C	H60-110E	H70-110XL	H110-150F	H135-155XL	H150-250E	H150-275H	H25-40XM	
NA	20	25	25	25	28	28	25	NA	25	NA	NA	11	
H45-65XM	H165-280XL	H300-360XL	H300-350B	KE	P40-50A	P60-80A							
11	NA	NA	NA	NA	NA	NA							

SWAP DRIVE TIRES (DUALS)

S20-30A	S25-35XL	S30-50C	S30-60ES	S40-60XL	S60-100E	S60-100B	S70-120XL	S125-150A	S25-40XM	S45-65XM	S135-155XL		
NA	NA	NA	NA	NA	NA	NA	NA	NA	NA	NA	NA		
H20-30E	H25-35XL	H30-60F/H	H40-60H/J	H40-60XL	H60-90C	H60-110E	H70-110XL	H110-150F	H135-155XL	H150-250E	H150-275H	H25-40XM	
NA	2	2	2	2	2	2	2	2	2	2	2	2	
H45-65XM	H165-280XL	H300-360XL	H300-350B	KE	P40-50A	P60-80A							
2	2	2	2	2	NA	NA							

SWAP DRIVE TIRES (SINGLES)

S20-30A	S25-35XL	S30-50C	S30-60ES	S40-60XL	S60-100E	S60-100B	S70-120XL	S125-150A	S25-40XM	S45-65XM	S135-155XL		
2	2	2	2	2	2	2	2	2	2	2	2		
H20-30E	H25-35XL	H30-60F/H	H40-60H/J	H40-60XL	H60-90C	H60-110E	H70-110XL	H110-150F	H135-155XL	H150-250E	H150-275H	H25-40XM	
2	2	1	1	1	1	1	2	NA	2	NA	NA	2	
H45-65XM	H165-280XL	H300-360XL	H300-350B	KE	P40-50A	P60-80A							
2	NA	NA	NA	NA	1	1							
A20 30XL													
2													
E20-30AS	E20-30BS	E25-35XL	E30-60AC	E30-60AS	E30-60BC	E30-60BS	E40-60XL	E60-100AS	E60-120BS	E70-120XL	E30-50ER	E30-50FR	E45 65XM
2	2	2	2	2	2	2	2	2	2	2	NA	NA	2
J25-35AS	J25-35B	J40-60AS	J40-60XL	J30-40XMT	J40 60XM								
2	2	2	2	2	2								

INSTALL WEIGHT INDICATOR

S20-30A	S25-35XL	S30-50C	S30-60ES	S40-60XL	S60-100E	S60-100B	S70-120XL	S125-150A	S25-40XM	S45-65XM	S135-155XL		
8	8	8	8	8	8	8	8	8	8	8	8		
H20-30E	H25-35XL	H30-60F/H	H40-60H/J	H40-60XL	H60-90C	H60-110E	H70-110XL	H110-150F	H135-155XL	H150-250E	H150-275H	H25-40XM	
8	8	8	8	8	8	8	8	8	8	8	8	8	
H45-65XM	H165-280XL	H300-360XL	H300-350B	KE	P40-50A	P60-80A							
8	9	9	9	8	8	8							
A20 30XL													
8													
E20-30AS	E20-30BS	E25-35XL	E30-60AC	E30-60AS	E30-60BC	E30-60BS	E40-60XL	E60-100AS	E60-120BS	E70-120XL	E30-50ER	E30-50FR	E45 65XM
8	8	8	8	8	8	8	8	8	8	8	8	8	8
J25-35AS	J25-35B	J40-60AS	J40-60XL	J30-40XMT	J40 60XM								
8	8	8	8	8	8								

NOTES

PERIODIC MAINTENANCE

INTERNAL COMBUSTION AND ELECTRIC TRUCKS

JOB DESCRIPTION	JOB CODE
PM BASIC (250 HR / 6 WKS) SERVICE	PB
PM BASIC + (1000 HR / 6 MOS) SERVICE	PC
PM COMPREHENSIVE (2000 HR /1 YR) SERVICE	PD

PB - BASIC (250 HR / 6 WKS) SERVICE*

S20-30A	S25-35XL	S30-50C	S30-60ES	S40-60XL	S60-100E	S60-100B	S70-120XL	S125-150A	S25-40XM	S45-65XM	S135-155XL		
1.5	1.5	1.5	1.5	1.5	1.5	1.5	1.5	2	1.5	1.5	2.5		
H20-30E	H25-35XL	H30-60F/H	H40-60H/J	H40-60XL	H60-90C	H60-110E	H70-110XL	H110-150F	H135-155XL	H150-250E	H150-275H	H25-40XM	
1.5	1.5	1.5	1.5	1.5	1.5	1.5	1.5	2	2	2	2	1.5	
H45-65XM	H165-280XL	H300-360XL	H300-350B	KE	P40-50A	P60-80A							
1.5	3.5	3.5	3.5	2	1.5	2							
A20 30XL													
1.5													
E20-30AS	E20-30BS	E25-35XL	E30-60AC	E30-60AS	E30-60BC	E30-60BS	E40-60XL	E60-100AS	E60-120BS	E70-120XL	E30-50ER	E30-50FR	E45 65XM
1.5	1.5	1.5	1.5	1.5	1.5	1.5	1.5	1.5	1.5	1.5	1.5	1.5	1.5
J25-35AS	J25-35B	J40-60AS	J40-60XL	J30-40XMT	J40 60XM								
1.5	1.5	1.5	1.5	1.5	1.5								

PC - BASIC + (1000 HR / 6 MOS) SERVICE*

S20-30A	S25-35XL	S30-50C	S30-60ES	S40-60XL	S60-100E	S60-100B	S70-120XL	S125-150A	S25-40XM	S45-65XM	S135-155XL		
2.5	2.5	2.5	2.5	2.5	2.5	2.5	3	3	3	3	3.5		
H20-30E	H25-35XL	H30-60F/H	H40-60H/J	H40-60XL	H60-90C	H60-110E	H70-110XL	H110-150F	H135-155XL	H150-250E	H150-275H	H25-40XM	
2.5	2.5	2.5	2.5	2.5	2.5	2.5	3	3	3	3	3	3	
H45-65XM	H165-280XL	H300-360XL	H300-350B	KE	P40-50A	P60-80A							
3	5	5	5	3	3	3							
A20 30XL													
2													
E20-30AS	E20-30BS	E25-35XL	E30-60AC	E30-60AS	E30-60BC	E30-60BS	E40-60XL	E60-100AS	E60-120BS	E70-120XL	E30-50ER	E30-50FR	E45 65XM
2	2	2	2	2	2	2	2	2	2	2.5	2.5	2.5	2.5
J25-35AS	J25-35B	J40-60AS	J40-60XL	J30-40XMT	J40 60XM								
2	2	2	2	2.5	2.5								

PD - COMPREHENSIVE (2000 HR / 1 YR) SERVICE*

S20-30A	S25-35XL	S30-50C	S30-60ES	S40-60XL	S60-100E	S60-100B	S70-120XL	S125-150A	S25-40XM	S45-65XM	S135-155XL		
8	8	8	8	8	8	8	8	8	8	8	10		
H20-30E	H25-35XL	H30-60F/H	H40-60H/J	H40-60XL	H60-90C	H60-110E	H70-110XL	H110-150F	H135-155XL	H150-250E	H150-275H	H25-40XM	
8	8	8	8	8	8	8	8	10	10	10	10	8	
H45-65XM	H165-280XL	H300-360XL	H300-350B	KE	P40-50A	P60-80A							
8	10	10	11	10	10	10							
A20 30XL													
8													
E20-30AS	E20-30BS	E25-35XL	E30-60AC	E30-60AS	E30-60BC	E30-60BS	E40-60XL	E60-100AS	E60-120BS	E70-120XL	E30-50ER	E30-50FR	E45 65XM
8	8	8	8	8	8	8	8	8	8	8	8	8	8
J25-35AS	J25-35B	J40-60AS	J40-60XL	J30-40XMT	J40 60XM								
8	8	8	8	8	8								

* SEE MAINTENANCE FORM NUMBER 852524

UPRIGHT and CARRIAGE

JOB DESCRIPTION **PAGE**

REPACK HOIST CYLINDER U-01

REPLACE ALL UPRIGHT ROLLERS AND WEAR PLATES U-07

REPLACE UPRIGHT MOUNTING BUSHINGS U-11

REPLACE ALL HOIST CHAINS U-13

REPLACE ALL CARRIAGE ROLLERS U-17

KARRY KRANE HOIST REPAIRS U-19

This page left intentionally blank

REPACK HOIST CYLINDER . . . LA

DESCRIPTION **PAGE**

STANDARD AND IFL UPRIGHTS -
SINGLE STAGE CYLINDER U-02

FREE-LIFT AND THREE-STAGE UPRIGHTS -
TWO-STAGE CYLINDER U-02

THREE- AND FOUR-STAGE UPRIGHTS -
DUAL SINGLE-STAGE CYLINDERS
FREE LIFT U-03
MAIN U-03

VISTA UPRIGHTS
VISTA FREE-LIFT U-04
VISTA TWO-STAGE U-04
VISTA THREE-STAGE FREE-LIFT CYLINDER ... U-05
VISTA THREE-STAGE MAIN CYLINDER U-05
VISTA FOUR-STAGE FREE-LIFT CYLINDER U-06
VISTA FOUR-STAGE MAIN CYLINDER U-06

LA - REPACK HOIST CYLINDER

INCLUDES LABOR TO REMOVE, DISASSEMBLE, INSPECT, REPLACE PACKING AND SEALS, REASSEMBLE AND INSTALL.

STANDARD AND IFL UPRIGHTS - SINGLE-STAGE CYLINDER

S20-30A	S25-35XL	S30-50C	S30-60ES	S40-60XL	S60-100E	S60-100B	S70-120XL	S125-150A	S25-40XM	S45-65XM	S135-155XL		
4	4	4	4	4	4	4	5	5	NA	NA	6		
H20-30E	H25-35XL	H30-60F/H	H40-60H/J	H40-60XL	H60-90C	H60-110E	H70-110XL	H110-150F	H135-155XL	H150-250E	H150-275H	H25-40XM	
4	4	4	4	4	4	7	6	8	7	10	10	NA	
H45-65XM	H165-280XL	H300-360XL	H300-350B	KE	P40-50A	P60-80A							
NA	NA	NA	10	5	4	4							
A20 30XL													
4													
E20-30AS	E20-30BS	E25-35XL	E30-60AC	E30-60AS	E30-60BC	E30-60BS	E40-60XL	E60-100AS	E60-120BS	E70-120XL	E30-50ER	E30-50FR	E45 65XM
4	4	4	4	4	4	4	4	5	5	6	NA	NA	NA
J25-35AS	J25-35B	J40-60AS	J40-60XL	J30-40XMT	J40 60XM								
4	4	4	4	NA	NA								

FREE-LIFT AND TREE- STAGE UPRIGHTS - TWO-STAGE CYLINDER

S20-30A	S25-35XL	S30-50C	S30-60ES	S40-60XL	S60-100E	S60-100B	S70-120XL	S125-150A	S25-40XM	S45-65XM	S135-155XL		
6	6	6	6	6.5	7	7	8	8	NA	NA	NA		
H20-30E	H25-35XL	H30-60F/H	H40-60H/J	H40-60XL	H60-90C	H60-110E	H70-110XL	H110-150F	H135-155XL	H150-250E	H150-275H	H25-40XM	
6	6	6	6	NA	7	7	8	NA	7	NA	NA	NA	
H45-65XM	H165-280XL	H300-360XL	H300-350B	KE	P40-50A	P60-80A							
NA	NA	NA	NA	NA	6	6							
A20 30XL													
6													
E20-30AS	E20-30BS	E25-35XL	E30-60AC	E30-60AS	E30-60BC	E30-60BS	E40-60XL	E60-100AS	E60-120BS	E70-120XL	E30-50ER	E30-50FR	E45 65XM
6	6	6	6	6	6	6	6	8	8	8	NA	NA	NA
J25-35AS	J25-35B	J40-60AS	J40-60XL	J30-40XMT	J40 60XM								
6	6	6	6	NA	NA								

THREE AND FOUR-STAGE UPRIGHTS - DUAL SINGLE-STAGE CYLINDERS

FREE-LIFT

S20-30A	S25-35XL	S30-50C	S30-60ES	S40-60XL	S60-100E	S60-100B	S70-120XL	S125-150A	S25-40XM	S45-65XM	S135-155XL		
4	5	4	4	5	6	5	6	NA	NA	NA	NA		
H20-30E	H25-35XL	H30-60F/H	H40-60H/J	H40-60XL	H60-90C	H60-110E	H70-110XL	H110-150F	H135-155XL	H150-250E	H150-275H	H25-40XM	
4	5	4	4	5	NA	NA	6.5	NA	6.5	NA	NA	NA	
H45-65XM	H165-280XL	H300-360XL	H300-350B	KE	P40-50A	P60-80A							
NA	NA	NA	NA	NA	6	6							
A20 30XL													
4													
E20-30AS	E20-30BS	E25-35XL	E30-60AC	E30-60AS	E30-60BC	E30-60BS	E40-60XL	E60-100AS	E60-120BS	E70-120XL	E30-50ER	E30-50FR	E45 65XM
4	4	6	5	5	5	5	6	6	6	7	NA	NA	NA
J25-35AS	J25-35B	J40-60AS	J40-60XL	J30-40XMT	J40 60XM								
4	4	5	6	NA	NA								

MAIN

S20-30A	S25-35XL	S30-50C	S30-60ES	S40-60XL	S60-100E	S60-100B	S70-120XL	S125-150A	S25-40XM	S45-65XM	S135-155XL		
6	6	6	6	6	7	7	7	NA					
H20-30E	H25-35XL	H30-60F/H	H40-60H/J	H40-60XL	H60-90C	H60-110E	H70-110XL	H110-150F	H135-155XL	H150-250E	H150-275H	H25-40XM	
6	6	6	6	6	NA	NA	7	NA	7.5	NA	NA	NA	
H45-65XM	H165-280XL	H300-360XL	H300-350B	KE	P40-50A	P60-80A							
NA	NA	NA	NA	NA	9	9							
A20 30XL													
6													
E20-30AS	E20-30BS	E25-35XL	E30-60AC	E30-60AS	E30-60BC	E30-60BS	E40-60XL	E60-100AS	E60-120BS	E70-120XL	E30-50ER	E30-50FR	E45 65XM
6	6	6	6	6	6	6	6	7	7	7	NA	NA	NA
J25-35AS	J25-35B	J40-60AS	J40-60XL	J30-40XMT	J40 60XM								
6	6	6	6	NA	NA								

VISTA UPRIGHTS

VISTA FREE-LIFT (ONE)

S20-30A	S25-35XL	S30-50C	S30-60ES	S40-60XL	S60-100E	S60-100B	S70-120XL	S125-150A	S25-40XM	S45-65XM	S135-155XL		
NA	4	NA	6	5	6	NA	7	NA	NA	NA	NA		
H20-30E	H25-35XL	H30-60F/H	H40-60H/J	H40-60XL	H60-90C	H60-110E	H70-110XL	H110-150F	H135-155XL	H150-250E	H150-275H	H25-40XM	
NA	4	NA	6	4	NA	NA	7	NA	7	NA	NA	NA	
H45-65XM	H165-280XL	H300-360XL	H300-350B	KE	P40-50A	P60-80A							
NA	NA	NA	NA	NA	NA	NA							
A20 30XL													
4													
E20-30AS	E20-30BS	E25-35XL	E30-60AC	E30-60AS	E30-60BC	E30-60BS	E40-60XL	E60-100AS	E60-120BS	E70-120XL	E30-50ER	E30-50FR	E45 65XM
NA	NA	4	6	6	5	5	5	NA	6	6	NA	NA	NA
J25-35AS	J25-35B	J40-60AS	J40-60XL	J30-40XMT	J40 60XM								
NA	4	6	5	NA	NA								

VISTA TWO-STAGE (ONE)

S20-30A	S25-35XL	S30-50C	S30-60ES	S40-60XL	S60-100E	S60-100B	S70-120XL	S125-150A	S25-40XM	S45-65XM	S135-155XL		
NA	4.5	NA	NA	7	NA	NA	7	NA	5	5	6		
H20-30E	H25-35XL	H30-60F/H	H40-60H/J	H40-60XL	H60-90C	H60-110E	H70-110XL	H110-150F	H135-155XL	H150-250E	H150-275H	H25-40XM	
NA	5	NA	4	4	NA	NA	7.5	NA	8	NA	NA	5	
H45-65XM	H165-280XL	H300-360XL	H300-350B	KE	P40-50A	P60-80A							
5	11	12	NA	NA	NA	NA							
A20 30XL													
4													
E20-30AS	E20-30BS	E25-35XL	E30-60AC	E30-60AS	E30-60BC	E30-60BS	E40-60XL	E60-100AS	E60-120BS	E70-120XL	E30-50ER	E30-50FR	E45 65XM
NA	5	4	6	6	5	6	5	NA	6	7	5	5	5
J25-35AS	J25-35B	J40-60AS	J40-60XL	J30-40XMT	J40 60XM								
NA	5	5	4	5	5								

VISTA THREE STAGE FREE-LIFT CYLINDER (ONE)

S20-30A	S25-35XL	S30-50C	S30-60ES	S40-60XL	S60-100E	S60-100B	S70-120XL	S125-150A	S25-40XM	S45-65XM	S135-155XL		
NA	4.5	NA	NA	5	NA	NA	6.5	NA	7.5	7.5	7.5		
H20-30E	H25-35XL	H30-60F/H	H40-60H/J	H40-60XL	H60-90C	H60-110E	H70-110XL	H110-150F	H135-155XL	H150-250E	H150-275H	H25-40XM	
NA	4.5	NA	5	5	NA	6	7	NA	8	NA	NA	7.5	
H45-65XM	H165-280XL	H300-360XL	H300-350B	KE	P40-50A	P60-80A							
7.5	NA	NA	NA	NA	NA	NA							
A20 30XL													
4													
E20-30AS	E20-30BS	E25-35XL	E30-60AC	E30-60AS	E30-60BC	E30-60BS	E40-60XL	E60-100AS	E60-120BS	E70-120XL	E30-50ER	E30-50FR	E45 65XM
NA	NA	4	NA	NA	5	6	5	6	6	8	7.5	7.5	7.5
J25-35AS	J25-35B	J40-60AS	J40-60XL	J30-40XMT	J40 60XM								
NA	4	6	6	7.5	7.5								

VISTA THREE STAGE MAIN CYLINDER (ONE)

S20-30A	S25-35XL	S30-50C	S30-60ES	S40-60XL	S60-100E	S60-100B	S70-120XL	S125-150A	S25-40XM	S45-65XM	S135-155XL		
NA	4	NA	NA	4.5	NA	NA	6	NA	6	6	6		
H20-30E	H25-35XL	H30-60F/H	H40-60H/J	H40-60XL	H60-90C	H60-110E	H70-110XL	H110-150F	H135-155XL	H150-250E	H150-275H	H25-40XM	
NA	4	NA	5	5	NA	6	6	NA	6.5	NA	NA	6	
H45-65XM	H165-280XL	H300-360XL	H300-350B	KE	P40-50A	P60-80A							
6	NA	NA	NA	NA	NA	NA							
A20 30XL													
4													
E20-30AS	E20-30BS	E25-35XL	E30-60AC	E30-60AS	E30-60BC	E30-60BS	E40-60XL	E60-100AS	E60-120BS	E70-120XL	E30-50ER	E30-50FR	E45 65XM
NA	5	4	5	NA	4	5	4	NA	6	5	6	6	6
J25-35AS	J25-35B	J40-60AS	J40-60XL	J30-40XMT	J40 60XM								
NA	5	5	4	6	6								

VISTA FOUR-STAGE FREE-LIFT CYLINDER (ONE)

S20-30A	S25-35XL	S30-50C	S30-60ES	S40-60XL	S60-100E	S60-100B	S70-120XL	S125-150A	S25-40XM	S45-65XM	S135-155XL		
NA	5	NA	5	5	8	NA	7	NA	NA	8	9		
H20-30E	H25-35XL	H30-60F/H	H40-60H/J	H40-60XL	H60-90C	H60-110E	H70-110XL	H110-150F	H135-155XL	H150-250E	H150-275H	H25-40XM	
NA	5	NA	6	5	NA	7	7	NA	7	NA	NA	NA	
H45-65XM	H165-280XL	H300-360XL	H300-350B	KE	P40-50A	P60-80A							
NA	NA	NA	NA	NA	NA	NA							
A20 30XL													
4													
E20-30AS	E20-30BS	E25-35XL	E30-60AC	E30-60AS	E30-60BC	E30-60BS	E40-60XL	E60-100AS	E60-120BS	E70-120XL	E30-50ER	E30-50FR	E45 65XM
NA	NA	4	4	NA	6	6	5	NA	NA	6	NA	8	8
J25-35AS	J25-35B	J40-60AS	J40-60XL	J30-40XMT	J40 60XM								
NA	4	6	5	NA	NA								

VISTA FOUR-STAGE MAIN CYLINDER (ONE)

S20-30A	S25-35XL	S30-50C	S30-60ES	S40-60XL	S60-100E	S60-100B	S70-120XL	S125-150A	S25-40XM	S45-65XM	S135-155XL		
NA	5	NA	5	5	NA	NA	7	NA	NA	6	7		
H20-30E	H25-35XL	H30-60F/H	H40-60H/J	H40-60XL	H60-90C	H60-110E	H70-110XL	H110-150F	H135-155XL	H150-250E	H150-275H	H25-40XM	
NA	5	NA	5	5	NA	6	6	NA	6	NA	NA	NA	
H45-65XM	H165-280XL	H300-360XL	H300-350B	KE	P40-50A	P60-80A							
NA	NA	NA	NA	NA	NA	NA							
A20 30XL													
4													
E20-30AS	E20-30BS	E25-35XL	E30-60AC	E30-60AS	E30-60BC	E30-60BS	E40-60XL	E60-100AS	E60-120BS	E70-120XL	E30-50ER	E30-50FR	E45 65XM
NA	5	5	5	5	5	5	5	NA	8	7	NA	6	6
J25-35AS	J25-35B	J40-60AS	J40-60XL	J30-40XMT	J40 60XM								
5	5	5	5	NA	NA								

REPLACE ALL UPRIGHT ROLLERS and WEAR PLATES . . . LB

DESCRIPTION	PAGE
STANDARD AND FREE-LIFT	U-08
THREE-STAGE	U-08
FOUR-STAGE	U-08
VISTA TWO-STAGE AND VISTA FREE LIFT	U-09
VISTA THREE-STAGE	U-09
VISTA FOUR-STAGE	U-09

LB - REPLACE ALL UPRIGHT ROLLERS AND WEAR PLATES

INCLUDES LABOR TO REMOVE AND REPLACE UPRIGHT WHEN REQUIRED

STANDARD AND FREE-LIFT

S20-30A	S25-35XL	S30-50C	S30-60ES	S40-60XL	S60-100E	S60-100B	S70-120XL	S125-150A	S25-40XM	S45-65XM	S135-155XL		
6	6	6	6	6	6	6	7	6	NA	NA	NA		
H20-30E	H25-35XL	H30-60F/H	H40-60H/J	H40-60XL	H60-90C	H60-110E	H70-110XL	H110-150F	H135-155XL	H150-250E	H150-275H	H25-40XM	
6	6	6	6	6	6	6	8	8	12	14	14	NA	
H45-65XM	H165-280XL	H300-360XL	H300-350B	KE	P40-50A	P60-80A							
NA	NA	NA	13	NA	6	6							
A20 30XL													
6													
E20-30AS	E20-30BS	E25-35XL	E30-60AC	E30-60AS	E30-60BC	E30-60BS	E40-60XL	E60-100AS	E60-120BS	E70-120XL	E30-50ER	E30-50FR	E45 65XM
6	6	7	6	6	6	6	8	6	7	9			
J25-35AS	J25-35B	J40-60AS	J40-60XL	J30-40XMT	J40 60XM								
6	6	6	6	NA	NA								

THREE-STAGE

S20-30A	S25-35XL	S30-50C	S30-60ES	S40-60XL	S60-100E	S60-100B	S70-120XL	S125-150A	S25-40XM	S45-65XM	S135-155XL		
12	12	12	12	12	13	13	13	15	NA	NA	NA		
H20-30E	H25-35XL	H30-60F/H	H40-60H/J	H40-60XL	H60-90C	H60-110E	H70-110XL	H110-150F	H135-155XL	H150-250E	H150-275H	H25-40XM	
12	12	12	12	12	13	12	14	NA	15	NA	NA	NA	
H45-65XM	H165-280XL	H300-360XL	H300-350B	KE	P40-50A	P60-80A							
NA	NA	NA	NA	NA	NA	13							
A20 30XL													
12													
E20-30AS	E20-30BS	E25-35XL	E30-60AC	E30-60AS	E30-60BC	E30-60BS	E40-60XL	E60-100AS	E60-120BS	E70-120XL	E30-50ER	E30-50FR	E45 65XM
12	12	12	12	12	12	12	14	13	13	14	NA	NA	NA
J25-35AS	J25-35B	J40-60AS	J40-60XL	J30-40XMT	J40 60XM								
12	12	12	14	NA	NA								

FOUR-STAGE

S20-30A	S25-35XL	S30-50C	S30-60ES	S40-60XL	S60-100E	S60-100B	S70-120XL	S125-150A	S25-40XM	S45-65XM	S135-155XL		
NA	16	14	14	16	NA	20	17	NA	NA	NA	NA		
H20-30E	H25-35XL	H30-60F/H	H40-60H/J	H40-60XL	H60-90C	H60-110E	H70-110XL	H110-150F	H135-155XL	H150-250E	H150-275H	H25-40XM	
NA	16	NA	NA	NA	NA	NA	16	NA	18.5	NA	NA	NA	
H45-65XM	H165-280XL	H300-360XL	H300-350B	KE	P40-50A	P60-80A							
NA	NA	NA	NA	NA	14	NA							
A20 30XL													
16													
E20-30AS	E20-30BS	E25-35XL	E30-60AC	E30-60AS	E30-60BC	E30-60BS	E40-60XL	E60-100AS	E60-120BS	E70-120XL	E30-50ER	E30-50FR	E45 65XM
16	16	16	16	16	16	16	17	16	16	18	NA	NA	NA
J25-35AS	J25-35B	J40-60AS	J40-60XL	J30-40XMT	J40 60XM								
16	16	16	16	NA	NA								

VISTA TWO-STAGE AND VISTA FREE-LIFT

S20-30A	S25-35XL	S30-50C	S30-60ES	S40-60XL	S60-100E	S60-100B	S70-120XL	S125-150A	S25-40XM	S45-65XM	S135-155XL		
NA	6	NA	6	6	6	NA	8	NA	8	8	9		
H20-30E	H25-35XL	H30-60F/H	H40-60H/J	H40-60XL	H60-90C	H60-110E	H70-110XL	H110-150F	H135-155XL	H150-250E	H150-275H	H25-40XM	
NA	7	NA	6	6	NA	6	8	NA	8	NA	NA	8	
H45-65XM	H165-280XL	H300-360XL	H300-350B	KE	P40-50A	P60-80A							
8	13	13	NA	NA	NA	NA							
A20 30XL													
7													
E20-30AS	E20-30BS	E25-35XL	E30-60AC	E30-60AS	E30-60BC	E30-60BS	E40-60XL	E60-100AS	E60-120BS	E70-120XL	E30-50ER	E30-50FR	E45 65XM
NA	8	7	NA	NA	8	8	8	NA	8	8	10	10	8
J25-35AS	J25-35B	J40-60AS	J40-60XL	J30-40XMT	J40 60XM								
NA	7	7	7	9	9								

VISTA THREE-STAGE

S20-30A	S25-35XL	S30-50C	S30-60ES	S40-60XL	S60-100E	S60-100B	S70-120XL	S125-150A	S25-40XM	S45-65XM	S135-155XL		
NA	14	NA	12	14	13	NA	14	NA	14	14	16		
H20-30E	H25-35XL	H30-60F/H	H40-60H/J	H40-60XL	H60-90C	H60-110E	H70-110XL	H110-150F	H135-155XL	H150-250E	H150-275H	H25-40XM	
NA	14	NA	13	14	NA	14	14	NA	16	NA	NA	14	
H45-65XM	H165-280XL	H300-360XL	H300-350B	KE	P40-50A	P60-80A							
14	NA	NA	NA	NA	NA	NA							
A20 30XL													
13													
E20-30AS	E20-30BS	E25-35XL	E30-60AC	E30-60AS	E30-60BC	E30-60BS	E40-60XL	E60-100AS	E60-120BS	E70-120XL	E30-50ER	E30-50FR	E45 65XM
NA	NA	14	NA	NA	13	13	14	NA	15	15	14	14	14
J25-35AS	J25-35B	J40-60AS	J40-60XL	J30-40XMT	J40 60XM								
NA	14	14	14	13	13								

VISTA FOUR-STAGE

S20-30A	S25-35XL	S30-50C	S30-60ES	S40-60XL	S60-100E	S60-100B	S70-120XL	S125-150A	S25-40XM	S45-65XM	S135-155XL		
NA	NA	NA	NA	17	NA	NA	NA	NA	NA	18	NA		
H20-30E	H25-35XL	H30-60F/H	H40-60H/J	H40-60XL	H60-90C	H60-110E	H70-110XL	H110-150F	H135-155XL	H150-250E	H150-275H	H25-40XM	
NA	NA	NA	NA	NA	NA	NA	NA	NA	NA	NA	NA	NA	
H45-65XM	H165-280XL	H300-360XL	H300-350B	KE	P40-50A	P60-80A							
NA	NA	NA	NA	NA	NA	NA							
A20 30XL													
NA													
E20-30AS	E20-30BS	E25-35XL	E30-60AC	E30-60AS	E30-60BC	E30-60BS	E40-60XL	E60-100AS	E60-120BS	E70-120XL	E30-50ER	E30-50FR	E45 65XM
NA	NA	NA	NA	NA	NA	NA	18	NA	NA	NA	18	18	18
J25-35AS	J25-35B	J40-60AS	J40-60XL	J30-40XMT	J40 60XM								
NA	NA	NA	NA	NA	NA								

NOTES

REPLACE UPRIGHT MOUNTING BUSHINGS . . . LE

DESCRIPTION	PAGE
ALL MODELS	U-12

LE - REPLACE UPTIGHT MOUNTING BUSHINGS

S20-30A	S25-35XL	S30-50C	S30-60ES	S40-60XL	S60-100E	S60-100B	S70-120XL	S125-150A	S25-40XM	S45-65XM	S135-155XL		
5	5	5	5	5	5	7	5	8	5	5	5		
H20-30E	H25-35XL	H30-60F/H	H40-60H/J	H40-60XL	H60-90C	H60-110E	H70-110XL	H110-150F	H135-155XL	H150-250E	H150-275H	H25-40XM	
5	5	5	5	4	4	4	5	8	6.5	8	8	5	
H45-65XM	H165-280XL	H300-360XL	H300-350B	KE	P40-50A	P60-80A							
5	8	8	8	NA	4	8							
A20 30XL													
5													
E20-30AS	E20-30BS	E25-35XL	E30-60AC	E30-60AS	E30-60BC	E30-60BS	E40-60XL	E60-100AS	E60-120BS	E70-120XL	E30-50ER	E30-50FR	E45 65XM
5	5	5	5	5	5	5	5	5	6	5	5	5	5
J25-35AS	J25-35B	J40-60AS	J40-60XL	J30-40XMT	J40 60XM								
5	5	5	5	5	5								

REPLACE
ALL HOIST CHAINS . . . LG

DESCRIPTION	PAGE
STANDARD-IFL UPRIGHTS	U-14
FREE-LIFT UPRIGHTS	U-14
THREE-STAGE UPRIGHTS	U-14
FOUR-STAGE UPRIGHTS	U-15
VISTA FREE-LIFT UPRIGHTS	U-15
VISTA TWO-STAGE UPRIGHTS	U-15
VISTA THREE-STAGE UPRIGHTS	U-16
VISTA FOUR-STAGE UPRIGHTS	U-16

LG - REPLACE ALL HOIST CHAINS

STANDARD - IFL UPRIGHTS

S20-30A	S25-35XL	S30-50C	S30-60ES	S40-60XL	S60-100E	S60-100B	S70-120XL	S125-150A	S25-40XM	S45-65XM	S135-155XL		
2	2	2	2	2	2	2	2.5	2.5	NA	NA	NA		
H20-30E	H25-35XL	H30-60F/H	H40-60H/J	H40-60XL	H60-90C	H60-110E	H70-110XL	H110-150F	H135-155XL	H150-250E	H150-275H	H25-40XM	
2	2	2	2	2	2	2	2.5	2.5	3	3	3	NA	
H45-65XM	H165-280XL	H300-360XL	H300-350B	KE	P40-50A	P60-80A							
NA	NA	NA	3	NA	2	2.5							
A20 30XL													
2													
E20-30AS	E20-30BS	E25-35XL	E30-60AC	E30-60AS	E30-60BC	E30-60BS	E40-60XL	E60-100AS	E60-120BS	E70-120XL	E30-50ER	E30-50FR	E45 65XM
2	2	2	2	2	2	2	2	2	2	2	NA	NA	NA
J25-35AS	J25-35B	J40-60AS	J40-60XL	J30-40XMT	J40 60XM								
2	2	2	2	NA	NA								

FREE-LIFT

S20-30A	S25-35XL	S30-50C	S30-60ES	S40-60XL	S60-100E	S60-100B	S70-120XL	S125-150A	S25-40XM	S45-65XM	S135-155XL		
3	3	3	3	3	3	3	3	3	NA	NA	NA		
H20-30E	H25-35XL	H30-60F/H	H40-60H/J	H40-60XL	H60-90C	H60-110E	H70-110XL	H110-150F	H135-155XL	H150-250E	H150-275H	H25-40XM	
3	3	3	3	3	3	3	3	NA	3	NA	NA	NA	
H45-65XM	H165-280XL	H300-360XL	H300-350B	KE	P40-50A	P60-80A							
NA	NA	NA	NA	NA	NA	NA							
A20 30XL													
3													
E20-30AS	E20-30BS	E25-35XL	E30-60AC	E30-60AS	E30-60BC	E30-60BS	E40-60XL	E60-100AS	E60-120BS	E70-120XL	E30-50ER	E30-50FR	E45 65XM
3	3	3	3	3	3	3	3	3	3	3	NA	NA	NA
J25-35AS	J25-35B	J40-60AS	J40-60XL	J30-40XMT	J40 60XM								
3	3	3	3	NA	NA								

THREE-STAGE

S20-30A	S25-35XL	S30-50C	S30-60ES	S40-60XL	S60-100E	S60-100B	S70-120XL	S125-150A	S25-40XM	S45-65XM	S135-155XL		
3.5	4	3.5	3.5	4	3.5	3.5	4	3.5	NA	NA	NA		
H20-30E	H25-35XL	H30-60F/H	H40-60H/J	H40-60XL	H60-90C	H60-110E	H70-110XL	H110-150F	H135-155XL	H150-250E	H150-275H	H25-40XM	
3.5	4	3.5	3.5	3.5	3.5	3.5	4	NA	4	NA	NA	NA	
H45-65XM	H165-280XL	H300-360XL	H300-350B	KE	P40-50A	P60-80A							
NA	NA	NA	NA	NA	3.5	3.5							
A20 30XL													
4													
E20-30AS	E20-30BS	E25-35XL	E30-60AC	E30-60AS	E30-60BC	E30-60BS	E40-60XL	E60-100AS	E60-120BS	E70-120XL	E30-50ER	E30-50FR	E45 65XM
3.5	3.5	4	3.5	3.5	3.5	3.5	4	3.5	3.5	4	NA	NA	NA
J25-35AS	J25-35B	J40-60AS	J40-60XL	J30-40XMT	J40 60XM								
3.5	3.5	3.5	3.5	NA	NA								

FOUR-STAGE

S20-30A	S25-35XL	S30-50C	S30-60ES	S40-60XL	S60-100E	S60-100B	S70-120XL	S125-150A	S25-40XM	S45-65XM	S135-155XL		
NA	4	4	4	4	NA	NA	4	NA	NA	NA	NA		
H20-30E	H25-35XL	H30-60F/H	H40-60H/J	H40-60XL	H60-90C	H60-110E	H70-110XL	H110-150F	H135-155XL	H150-250E	H150-275H	H25-40XM	
NA	4	NA	NA	NA	NA	NA	4	NA	4	NA	NA	NA	
H45-65XM	H165-280XL	H300-360XL	H300-350B	KE	P40-50A	P60-80A							
NA	NA	NA	NA	NA	NA	NA							
A20 30XL													
4													
E20-30AS	E20-30BS	E25-35XL	E30-60AC	E30-60AS	E30-60BC	E30-60BS	E40-60XL	E60-100AS	E60-120BS	E70-120XL	E30-50ER	E30-50FR	E45 65XM
4	4	4	4	4	4	4	4	4	4	4	NA	NA	NA
J25-35AS	J25-35B	J40-60AS	J40-60XL	J30-40XMT	J40 60XM								
4	4	4	4	NA	NA								

VISTA FREE-LIFT

S20-30A	S25-35XL	S30-50C	S30-60ES	S40-60XL	S60-100E	S60-100B	S70-120XL	S125-150A	S25-40XM	S45-65XM	S135-155XL		
NA	2	2.5	2	2.5	3	3.5	3	3.5	2.5	3	3.5		
H20-30E	H25-35XL	H30-60F/H	H40-60H/J	H40-60XL	H60-90C	H60-110E	H70-110XL	H110-150F	H135-155XL	H150-250E	H150-275H	H25-40XM	
NA	2	2	2	3	3.5	3	3	3.5	3.5	NA	NA	2.5	
H45-65XM	H165-280XL	H300-360XL	H300-350B	KE	P40-50A	P60-80A							
3	3.5	3.5	NA	NA	NA	NA							
A20 30XL													
3													
E20-30AS	E20-30BS	E25-35XL	E30-60AC	E30-60AS	E30-60BC	E30-60BS	E40-60XL	E60-100AS	E60-120BS	E70-120XL	E30-50ER	E30-50FR	E45 65XM
3	3	3	3	3	3	3	3	3	3	3.5	3	3	3
J25-35AS	J25-35B	J40-60AS	J40-60XL	J30-40XMT	J40 60XM								
3	3	3	3	3	3								

VISTA TWO-STAGE

S20-30A	S25-35XL	S30-50C	S30-60ES	S40-60XL	S60-100E	S60-100B	S70-120XL	S125-150A	S25-40XM	S45-65XM	S135-155XL		
NA	3	NA	3	3	3	NA	3	NA	4	4	4		
H20-30E	H25-35XL	H30-60F/H	H40-60H/J	H40-60XL	H60-90C	H60-110E	H70-110XL	H110-150F	H135-155XL	H150-250E	H150-275H	H25-40XM	
NA	3	3	3	3	NA	3	3	NA	3.5	NA	NA	3	
H45-65XM	H165-280XL	H300-360XL	H300-350B	KE	P40-50A	P60-80A							
3	4	4	NA	NA	NA	NA							
A20 30XL													
2													
E20-30AS	E20-30BS	E25-35XL	E30-60AC	E30-60AS	E30-60BC	E30-60BS	E40-60XL	E60-100AS	E60-120BS	E70-120XL	E30-50ER	E30-50FR	E45 65XM
2.5	3	3	3	3	3	3	3	3	3	3	4	4	4
J25-35AS	J25-35B	J40-60AS	J40-60XL	J30-40XMT	J40 60XM								
3	3	3	3	4	4								

VISTA THREE-STAGE

S20-30A	S25-35XL	S30-50C	S30-60ES	S40-60XL	S60-100E	S60-100B	S70-120XL	S125-150A	S25-40XM	S45-65XM	S135-155XL		
NA	5	NA	5	5	5	NA	5	NA	6	6	6		
H20-30E	H25-35XL	H30-60F/H	H40-60H/J	H40-60XL	H60-90C	H60-110E	H70-110XL	H110-150F	H135-155XL	H150-250E	H150-275H	H25-40XM	
NA	5	NA	5	5	NA	5	5	NA	6	NA	NA	5	
H45-65XM	H165-280XL	H300-360XL	H300-350B	KE	P40-50A	P60-80A							
5	NA	NA	NA	NA	NA	NA							
A20 30XL													
5													
E20-30AS	E20-30BS	E25-35XL	E30-60AC	E30-60AS	E30-60BC	E30-60BS	E40-60XL	E60-100AS	E60-120BS	E70-120XL	E30-50ER	E30-50FR	E45 65XM
5	5	5	5	5	5	5	5	5	5	5	6	6	6
J25-35AS	J25-35B	J40-60AS	J40-60XL	J30-40XMT	J40 60XM								
5	5	5	5	6	6								

VISTA FOUR-STAGE

S20-30A	S25-35XL	S30-50C	S30-60ES	S40-60XL	S60-100E	S60-100B	S70-120XL	S125-150A	S25-40XM	S45-65XM	S135-155XL		
NA	NA	NA	NA	6.5	NA	NA	NA	NA	NA	8	8		
H20-30E	H25-35XL	H30-60F/H	H40-60H/J	H40-60XL	H60-90C	H60-110E	H70-110XL	H110-150F	H135-155XL	H150-250E	H150-275H	H25-40XM	
NA	NA	NA	NA	NA	NA	NA	NA	NA	NA	NA	NA	NA	
H45-65XM	H165-280XL	H300-360XL	H300-350B	KE	P40-50A	P60-80A							
NA	NA	NA	NA	NA	NA	NA							
A20 30XL													
NA													
E20-30AS	E20-30BS	E25-35XL	E30-60AC	E30-60AS	E30-60BC	E30-60BS	E40-60XL	E60-100AS	E60-120BS	E70-120XL	E30-50ER	E30-50FR	E45 65XM
NA	NA	NA	NA	NA	NA	NA	7	NA	NA	NA	NA	8	8
J25-35AS	J25-35B	J40-60AS	J40-60XL	J30-40XMT	J40 60XM								
	NA	NA	NA	NA	NA								

REPLACE ALL CARRIAGE ROLLERS . . . LM

DESCRIPTION	PAGE
ALL MODELS	U-18

LM - REPLACE ALL CARRIAGE ROLLERS

INCLUDES LABOR TO REMOVE CARRIAGE, REPLACE ROLLERS, ADJUST AND INSTALL CARRIAGE.

ALL UPRIGHTS

S20-30A	**S25-35XL**	**S30-50C**	**S30-60ES**	**S40-60XL**	**S60-100E**	**S60-100B**	**S70-120XL**	**S125-150A**	**S25-40XM**	**S45-65XM**	**S135-155XL**		
4	3	3	3	3	3	3	3	3	3.5	3.5	4.5		
H20-30E	**H25-35XL**	**H30-60F/H**	**H40-60H/J**	**H40-60XL**	**H60-90C**	**H60-110E**	**H70-110XL**	**H110-150F**	**H135-155XL**	**H150-250E**	**H150-275H**	**H25-40XM**	
4	3	3	3	3	3	3	3	3	3	3	3	3.5	
H45-65XM	**H165-280XL**	**H300-360XL**	**H300-350B**	**KE**	**P40-50A**	**P60-80A**							
3.5	6	6	6	NA	3	3							
A20 30XL													
3													
E20-30AS	**E20-30BS**	**E25-35XL**	**E30-60AC**	**E30-60AS**	**E30-60BC**	**E30-60BS**	**E40-60XL**	**E60-100AS**	**E60-120BS**	**E70-120XL**	**E30-50ER**	**E30-50FR**	**E45 65XM**
3	3	3	3	3	3	3	3	3	3	3	4	4	3.5
J25-35AS	**J25-35B**	**J40-60AS**	**J40-60XL**	**J30-40XMT**	**J40 60XM**								
3	3	3	3	3.5	3.5								

KARRY KRANE
HOIST REPAIRS

JOB DESCRIPTION	JOB CODE
MAJOR ADJUSTMENT	LR
REBUILD	LR
REPLACE CLUTCH	LR

LR - MAJOR ADJUSTMENT

S20-30A	S25-35XL	S30-50C	S30-60ES	S40-60XL	S60-100E	S60-100B	S70-120XL	S125-150A	S25-40XM	S45-65XM	S135-155XL		
NA	NA	NA	NA	NA	NA	NA	NA	NA	NA	NA	NA		
H20-30E	H25-35XL	H30-60F/H	H40-60H/J	H40-60XL	H60-90C	H60-110E	H70-110XL	H110-150F	H135-155XL	H150-250E	H150-275H	H25-40XM	
NA	NA	NA	NA	NA	NA	NA	NA	NA	NA	NA	NA	NA	
H45-65XM	H165-280XL	H300-360XL	H300-350B	KE	P40-50A	P60-80A							
NA	NA	NA	NA	6	NA	NA							
A20 30XL													
NA													
E20-30AS	E20-30BS	E25-35XL	E30-60AC	E30-60AS	E30-60BC	E30-60BS	E40-60XL	E60-100AS	E60-120BS	E70-120XL	E30-50ER	E30-50FR	E45 65XM
NA	NA	NA	NA	NA	NA	NA	NA	NA	NA	NA	NA	NA	NA
J25-35AS	J25-35B	J40-60AS	J40-60XL	J30-40XMT	J40 60XM								
NA	NA	NA	NA	NA	NA								

LR - REBUILD

INCLUDES LABOR TO REMOVE WORM DRIVE AND CLUTCH ASSEMBLY, DISASSEMBLE, REPLACE WORN PARTS, ASSEMBLE, INSTALL AND ADJUST.

S20-30A	S25-35XL	S30-50C	S30-60ES	S40-60XL	S60-100E	S60-100B	S70-120XL	S125-150A	S25-40XM	S45-65XM	S135-155XL		
NA	NA	NA	NA	NA	NA	NA	NA	NA	NA	NA	NA		
H20-30E	H25-35XL	H30-60F/H	H40-60H/J	H40-60XL	H60-90C	H60-110E	H70-110XL	H110-150F	H135-155XL	H150-250E	H150-275H	H25-40XM	
NA	NA	NA	NA	NA	NA	NA	NA	NA	NA	NA	NA	NA	
H45-65XM	H165-280XL	H300-360XL	H300-350B	KE	P40-50A	P60-80A							
NA	NA	NA	NA	18	NA	NA							
A20 30XL													
NA													
E20-30AS	E20-30BS	E25-35XL	E30-60AC	E30-60AS	E30-60BC	E30-60BS	E40-60XL	E60-100AS	E60-120BS	E70-120XL	E30-50ER	E30-50FR	E45 65XM
NA	NA	NA	NA	NA	NA	NA	NA	NA	NA	NA	NA	NA	NA
J25-35AS	J25-35B	J40-60AS	J40-60XL	J30-40XMT	J40 60XM								
NA	NA	NA	NA	NA	NA								

LR - REPLACE CLUTCH

INCLUDES ALL LABOR TO REPLACE CLUTCH, BANDS, SEALS AND ADJUST

S20-30A	S25-35XL	S30-50C	S30-60ES	S40-60XL	S60-100E	S60-100B	S70-120XL	S125-150A	S25-40XM	S45-65XM	S135-155XL		
NA	NA	NA	NA	NA	NA	NA	NA	NA	NA	NA	NA		
H20-30E	H25-35XL	H30-60F/H	H40-60H/J	H40-60XL	H60-90C	H60-110E	H70-110XL	H110-150F	H135-155XL	H150-250E	H150-275H	H25-40XM	
NA	NA	NA	NA	NA	NA	NA	NA	NA	NA	NA	NA	NA	
H45-65XM	H165-280XL	H300-360XL	H300-350B	KE	P40-50A	P60-80A							
NA	NA	NA	NA	10	NA	NA							
A20 30XL													
NA													
E20-30AS	E20-30BS	E25-35XL	E30-60AC	E30-60AS	E30-60BC	E30-60BS	E40-60XL	E60-100AS	E60-120BS	E70-120XL	E30-50ER	E30-50FR	E45 65XM
NA	NA	NA	NA	NA	NA	NA	NA	NA	NA	NA	NA	NA	NA
J25-35AS	J25-35B	J40-60AS	J40-60XL	J30-40XMT	J40 60XM								
NA	NA	NA	NA	NA	NA								

HYSTER COMPANY
P.O. BOX 847
DANVILLE, ILLINOIS 61834-0847 USA

Hyster and are registered trademarks of Hyster Company
UNISOURCE and are trademarks of Hyster Company
Hyster products are subject to change without notice

© Hyster Company 1998
Printed in USA 7/98

Kalmar AC

LABOR STANDARD GUIDE

(FLAT RATE MANUAL)

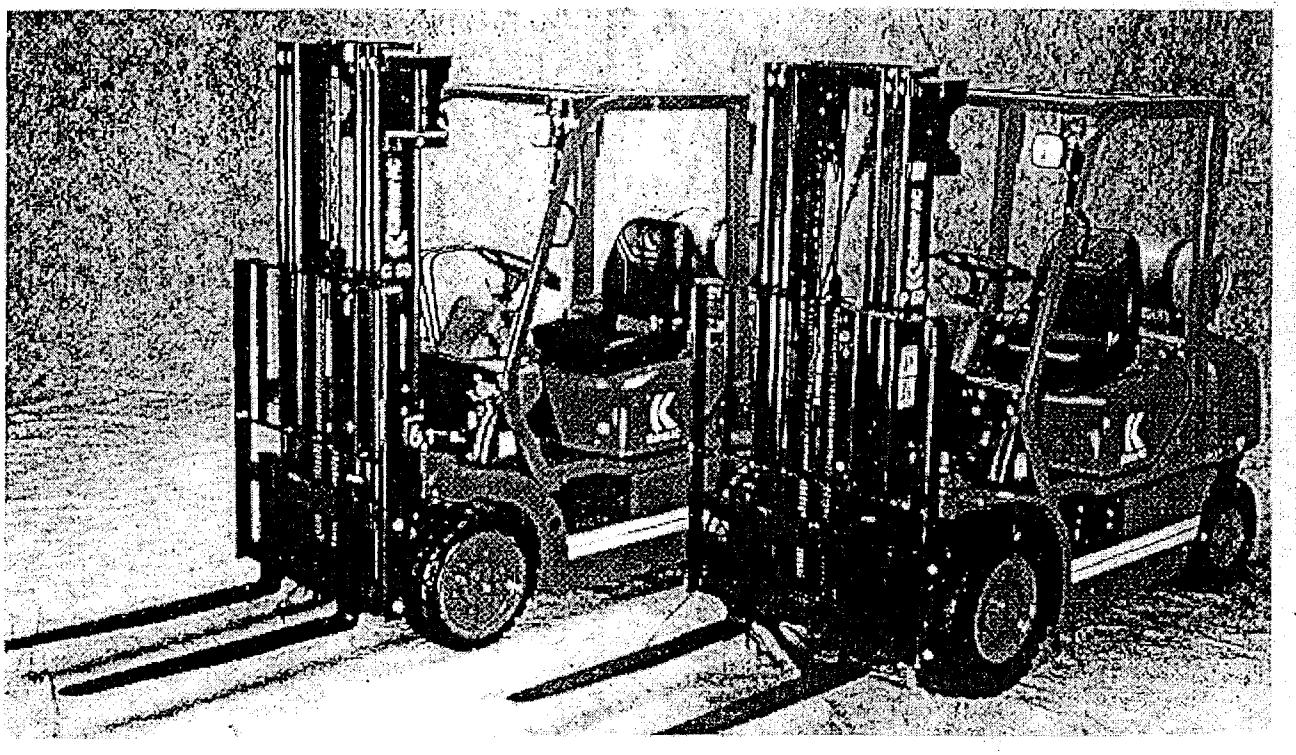

Manual No. FLR 1999
Issued June 1999
Revised March 2001

Kalmar AC

TO: Warranty Administrators
Parts Managers
Service Managers

Date: June, 1999

Subject: Warranty Labor Standard Guide (Flat Rate Guide) and updates for policy and procedures manual.

Enclosed in this packet is the new manual to be used for all warranty repairs on Kalmar AC trucks. Please discard the manuals you are currently using and replace with the manual. Also included is new pages for your policy and procedures manual, please insert in proper section.

All warranty reimbursement will be based on this manual. There may be circumstances when it will take more time to complete a repair due to unforeseen problems, when this happens please give a detailed explanation and the extra time will be considered and paid if justified.

When it is felt that a time is unfair please fill out the review sheet and a new study will be done and a revision done if deemed necessary by Kalmar AC.

When a suitable problem code cannot be found use the miscellaneous code and a new code will be assigned if necessary, in this case submit for actual repair time and the time will be reviewed for a standard and paid if not excessive.

NOTICE:
All warranty repairs over $1000.00 must have prior approval before work is done.

Kalmar AC

FLAT RATE REVIEW SHEET

Dealer Code. _____

Dealer Name. _____

Dealer Contact. _____

Truck Model. _____ Serial Number. _____

Problem Code. _____ Current Hours Allowed _____

Hours Recommended. _____

Detail repair and times (including special tools if needed).

_____

_____

_____

_____

_____

_____

_____

_____

_____

_____

Dealer signature _____

Mail to: **Kalmar AC, Inc.**
144181 Lochridge Blvd., Bldg 2
Covington, Georgia 30014
Attn: Warranty Department

Kalmar AC

MANDATORY RETURN LIST

When warranty repairs are done on a Kalmar AC lift truck, the following parts must be returned, prepaid to: use orange label or send to

Kalmar AC, Inc.
144181 Lochridge Blvd., Bldg 2
Covington, Georgia 30014
Attn: Warranty Department

The parts listed below must be returned within 30 days of completion of repair, with a copy of the warranty claim attached.

Any item with a dealer net cost of more then $50.00
All electronic parts if not rebuild able
Fuel system parts if not rebuild able
Engines if not rebuild able
Transmissions if not rebuild able
Steer axle if not rebuild able
Drive axles if not rebuild able
Transaxles if not rebuild able
Pumps if not rebuild able
Control valves or parts if not rebuild able
Cylinders or parts if not rebuild able
Brake parts if not rebuild able

NOTICE: All parts are to be rebuilt if more economical than replacing.

- The only exception to the above is when a part can be rebuilt or repaired. If it is more economical to rebuild than replace, Kalmar AC will reimburse the cost of rebuilding, or installing a rebuilt component. A copy of the vendor repair bill must be sent in with the warranty claim.

Any claim where the part is not returned within the 30 day limit will be rejected and not reopened.

All parts must have a copy of the claim attached.

All parts that are not to be return must be held until the claim is paid or the part is requested back.

Issued June 1999
Revised March 2001

Kalmar AC

Warranty Returns

The following procedures are to be used in determining if a failed part needs to be returned to Kalmar AC.

- Any part that is used on a warranty repair and is listed on the Mandatory Return List, must be returned to Kalmar AC within 30 days from the date the repair is completed. If the part is not returned within the claim will be rejected and will not be reopened.

- Any failed part that is used and is not on the Mandatory Return List must be held until the claim is paid, or the part is requested back. On any claim where the part is not available for return, the claim will be rejected and will not be reopened.

- The only exception to the above is when a part can be rebuilt or repaired. If it is more economical to rebuild than replace, Kalmar AC will reimburse the cost of rebuilding, or installing a rebuilt component. A copy of the vendor repair bill must be sent in with the warranty claim.

- Only Kalmar AC parts are allowed to be used on warranty repairs.

- However If you use a none Kalmar part you MUST reorder new stock from Kalmar AC within 5 days or the claim will be denied a copy of the parts order must accompany the claim.

Table of Contents

WF40 - WA30- WF45B - WA30B	
OPERATION DESCRIPTION	**PAGE NO.**
TRANSMISSION	8
ELECTRICAL	8
HYDRAULIC	9
FRAME	9

WF50/65/80 (B) - WA65/80 (B)	
OPERATION DESCRIPTION	**PAGE NO.**
TRANSMISSION	10
ELECTRICAL	10
HYDRAULIC	11
FRAME	12

OP30	
OPERATION DESCRIPTION	**PAGE NO.**
TRANSMISSION	13
ELECTRICAL	13
HYDRAULIC	14
FRAME	15
MAST	15

NR30/40	
OPERATION DESCRIPTION	**PAGE NO.**
TRANSMISSION	16
ELECTRICAL	16
HYDRAULIC	17
18	18
MAST	19
REACH	19

Table of Contents

NR45	
OPERATION DESCRIPTION	**PAGE NO.**
TRANSMISSION	20
ELECTRICAL	20
HYDRAULIC	22
FRAME	22
MAST	23
REACH	23

WB60/80 (B)	
OPERATION DESCRIPTION	**PAGE NO.**
TRANSMISSION	24
ELECTRICAL	24
HYDRAULIC	25
FRAME	25

WC20/30/40	
OPERATION DESCRIPTION	**PAGE NO.**
TRANSMISSION	27
ELECTRICAL	27
HYDRAULIC	28
FRAME	29
MAST	29

WT750 (B)	
OPERATION DESCRIPTION	**PAGE NO.**
TRANSMISSION	30
ELECTRICAL	30
FRAME	31

Table of Contents

WS22/30/40	
OPERATION DESCRIPTION	PAGE NO.
TRANSMISSION	32
ELECTRICAL	32
HYDRAULIC	33
FRAME	34
MAST	34

WR30	
OPERATION DESCRIPTION	PAGE NO.
TRANSMISSION	35
ELECTRICAL	35
HYDRAULIC	36
FRAME	37
MAST	37
REACH	37

NR35B	
OPERATION DESCRIPTION	PAGE NO.
TRANSMISSION	38
ELECTRICAL	38
HYDRAULIC	39
FRAME	40
MAST	40
REACH	41

Table of Contents

NR45B	
OPERATION DESCRIPTION	**PAGE NO.**
TRANSMISSION	42
ELECTRICAL	42
HYDRAULIC	43
FRAME	44
MAST	45
REACH	45

ND30B	
OPERATION DESCRIPTION	**PAGE NO.**
TRANSMISSION	46
ELECTRICAL	46
HYDRAULIC	47
FRAME	48
MAST	48
REACH	49

NS40B	
OPERATION DESCRIPTION	**PAGE NO.**
TRANSMISSION	50
ELECTRICAL	50
HYDRAULIC	51
FRAME	52
MAST	52

Table of Contents

NS50B	
OPERATION DESCRIPTION	PAGE NO.
TRANSMISSION	53
ELECTRICAL	53
HYDRAULIC	54
FRAME	55
MAST	55

ACNR30/40 - ACNM30/35 - NM30/35B	
OPERATION DESCRIPTION	PAGE NO.
BATTERY AND CONNECTIONS	56
BRAKE SYSTEM	56
DRIVE AXLE	56
ELECTRICAL SYSTEM	57
FRAME	57
HYDRAULIC SYSTEM	57
LIFT CYLINDER	58
MAST, CARRIAGE, AND FORKS	58
STEERING	58
REACH ASSEMBLY	59
ACCELERATOR	59
DRIVE MOTOR	59
PRIMARY ELECTRICAL CONTROLS	60
PUMP MOTOR	60

ET30/35 - E30/35 - E40/50/60 C/P30/35 - C/P 40/50/60 - C/P80/100 - P150/155	
OPERATION DESCRIPTION	**PAGE NO.**
01. ENGINE	61
02. ENGINE ELECTRICAL	63
03. EXHAUST SYSTEM	64
04. COOLING SYSTEM	65
05. FUEL SYSTEM (GASOLINE - DIESEL)	66
06. FUEL SYSTEM - LPG	67
10. CLUTCH	68
13. TORQUE CONVERTOR	69
14. TRANSMISSION (MANUAL SHIFT)	70
15. TRANSMISSION TORQUFLOW	71
16. TRANSFER CASE	72
17. DRIVE MOTOR	73
18. HYDRAULIC MOTOR	74
19. POWER STEER MOTOR	75
21. DRIVE AXLE	76
24. STEER AXLE	77
27. DRIVE WHEEL/TIRE	78
28. STEER WHEEL/TIRE	79
30. BRAKE SYSTEM	80
33. STEERING WHEEL ASSEMBLY	81
34. STEERING COLUMN ASSEMBLY	82
35. STEER COLUMN LINKAGE	83
36. PEDALS	84
37. ACCELERATOR PEDAL/CABLE	85
40. OVERHEAD GUARD	86
41. FRAME	87

CONTINUED ON NEXT PAGE

ET30/35 - E30/35 - E40/50/60 C/P30/35 - C/P 40/50/60 - C/P80/100 - P150/155	
47. SCR DRIVE CONTROL	88
48. CONTACTOR PANEL	89
50. OUTER PANEL	90
55. ELECTRICAL SYSTEM	91
60. HYDRAULIC PUMP	92
61. HYDRAULIC CONTROL VALVE	93
62. POWER STEERING PUMP	94
64. TILT CYLINDER	95
65. POWER STEER CYLINDER	96
66. HYDRAULIC SYSTEM	97
72. MAST	98
93. FORKS	99
94. ATTACHMENTS	100

WF40/WA30/WF45B/WA30B

TRANSMISSION

PROB. CODE	OPERATION DESCRIPTION	TIME
A1.001	REMOVE AND REPLACE	1.0
A1.002	REPLACE AXLE SEAL (ADD 0.5 WA)	1.0
A1.004	REBUILD/RECONDITION	4.5
A1.005	REPLACE CONTROL HANDLE HEAD	1.5
A1.006	REPLACE CONTROL HANDLE STEM	2.0
A1.007	REPLACE HAND GUARD	1.0
A1.008	REPLACE HANDLE SPRING	1.0
A1.009	REPLACE BRAKE SPRING	1.5
A1.011	ADJUST BRAKE	0.5
A1.012	REPLACE DRIVE TIRE (ADD 0.5 WA)	0.5
A1.013	REPLACE BRAKE SHOE	1.0

ELECTRICAL

PROB. CODE	OPERATION DESCRIPTION	TIME
A2.001	REPLACE HORN	0.3
A2.002	REPLACE BDI	0.5
A2.003	REPLACE HOURMETER	0.5
A2.004	REPLACE HANDRAIL WIRING HARNESS	1.0
A2.005	REPLACE KEY SWITCH	0.5
A2.006	REPLACE BRAKE SWITCH	0.5
A2.007	REPLACE EMERGENCY DISCONNECT SWITCH	0.5
A2.009	REPLACE HORN SWITCH	0.8
A2.010	REPLACE FORWARD/REVERSE SWITCH	0.5
A2.013	REPLACE LINE CONTACTOR	0.5
A2.014	REPLACE POTENTIOMETER	0.5
A2.015	REPLACE DRIVE MOTOR	1.5
A2.021	REPLACE LIFT PUMP CONTACTOR	0.5
A2.028	REPLACE TRANSISTOR CONTROLLER	0.8
A2.036	REPLACE BATTERY CONNECTOR	0.5
A2.037	REPLACE ONE POWER CABLE	1.0
A2.038	REPAIR OPEN WIRE	0.5
A2.039	REPLACE LIFT PUMP MOTOR	1.5
A2.042	RESEAL LIFT PUMP MOTOR	1.5
A2.045	REPLACE TIME DELAY	0.5
A2.050	REPLACE CIRCUIT BREAKER	0.5
A2.057	REPLACE LOWERING SOLENOID COIL	0.5
A2.059	REPLACE HANDLE HEAD HARNESS	1.0
A2.063	REPLACE HANDLE HARNESS	2.0

CONTINUED

WF40/WA30/WF45B/WA30B

ELECTRICAL CONTINUED		
PROB. CODE	OPERATION DESCRIPTION	TIME
A2.064	REPLACE LIFT SWITCH	0.5
A2.065	REPLACE LOWER SWITCH	0.5
A2.066	REPLACE REVERSER SWITCH	1.0
A2.068	REPLACE ONE DRIVE MOTOR CABLE	2.0
A2.069	REPLACE LIFT LIMIT SWITCH	0.5
A2.073	REPLACE DRIVE MOTOR BRUSHES	1.0
A2.074	REPLACE PUMP MOTOR BRUSHES	1.5
A2.077	REPLACE BATTERY	0.5
A2.078	REPLACE BATTERY CHARGER	1.0
A2.080	REPLACE THERMOSTAT	0.5
A2.081	REPLACE HEATER	1.0

HYDRAULIC

PROB. CODE	OPERATION DESCRIPTION	TIME
A3.001	REPLACE RESERVOIR	1.5
A3.011	REPLACE ANY HYDRAULIC HOSE	0.5
A3.013	REPLACE LIFT PUMP	2.0
A3.017	REPLACE LIFT PUMP CHECK VALVE	0.5
A3.018	REPLACE LIFT CYLINDER	1.0
A3.019	RESEAL LIFT CYLINDER (R&R INCLUDED)	2.0
A3.021	REPLACE LIFT PUMP/MOTOR ASSY	1.0
A3.022	REPLACE LOWERING VALVE	0.5

FRAME

PROB. CODE	OPERATION DESCRIPTION	TIME
A4.009	REPLACE PIVOT BEARING	2.5
A4.013	REPLACE LOAD WHEEL	0.5
A4.017	REPLACE STABILIZING SUPPORT	0.5
A4.018	REPLACE PULL ROD	1.0
A4.019	REPLACE WHEEL FORK	1.0
A4.020	REPLACE LIFT FRAME	4.5
A4.021	REPLACE LOWER LINK/LIFT FRAME	1.5
A4.023	REPLACE STABILIZER CASTER	0.8
A4.024	REPLACE CASTER WHEEL	0.5
A4.026	REPLACE RIDER PLATFORM CUSHION BUMPER	0.8
A4.029	REMOVE AND REPLACE RIDER PLATFORM	0.5
A4.030	REPLACE RIDER PLATFORM CASTER	0.5
A4.031	REPLACE RIDER PLATFORM CASTER WHEEL	0.5

WF50/65/80(B)/WA65/80(B)

TRANSMISSION

PROB. CODE	OPERATION DESCRIPTION	TIME
B1.001	REMOVE AND REPLACE	1.5
B1.002	REPLACE AXLE SEAL	1.0
B1.003	REPLACE DRIVE AXLE	2.5
B1.004	REBUILD/RECONDITION	4.5
B1.006	REPLACE CONTROL HANDLE HEAD	1.5
B1.007	REPLACE CONTROL HANDLE STEM	1.0
B1.008	REPLACE HAND GUARD	0.7
B1.009	REPLACE HANDLE SPRING	0.7
B1.010	REPLACE BRAKE SPRING	1.0
B1.011	ADJUST BRAKE	0.3
B1.012	REPLACE DRIVE TIRE	0.5
B1.013	REPLACE BRAKE SHOE	1.0
B1.014	REPLACE HANDLE BUMPER	0.3

ELECTRICAL

PROB. CODE	OPERATION DESCRIPTION	TIME
B2.001	REPLACE HORN	0.3
B2.002	REPLACE BDI	0.5
B2.003	REPLACE HOURMETER	0.5
B2.004	REPLACE HANDRAIL WIRING HARNESS	1.0
B2.005	REPLACE KEY SWITCH	0.5
B2.006	REPLACE INTERLOCK BRAKE SWITCH	1.0
B2.007	REPLACE EMERGENCY DISCONNECT SWITCH	0.5
B2.008	REPLACE HANDRAIL HORN SWITCH	0.8
B2.009	REPLACE HORN SWITCH	0.8
B2.010	REPLACE FORWARD/REVERSE SWITCH	0.5
B2.013	REPLACE LINE CONTACTOR	0.5
B2.014	REPLACE POTENTIOMETER	0.5
B2.015	REPLACE DRIVE MOTOR	2.0
B2.018	REPLACE FORWARD/REVERSE CONTACTOR	1.0
B2.021	REPLACE LIFT PUMP CONTACTOR	0.5
B2.028	REPLACE TRANSISTOR CONTROLLER	0.8
B2.036	REPLACE BATTERY CONNECTOR	0.6
B2.037	REPLACE ONE POWER CABLE	1.0
B2.038	REPAIR ONE OPEN WIRE	0.5
B2.039	REPLACE LIFT PUMP MOTOR	1.5
B2.042	RESEAL LIFT PUMP MOTOR	1.8
B2.043	REPLACE HIGH SPEED HANDRAIL SWITCH	0.8

CONTINUED

WF50/65/80(B)/WA65/80(B)

ELECTRICAL CONTINUED

PROB. CODE	OPERATION DESCRIPTION	TIME
B2.044	REPLACE HANDRAIL HORN SWITCH	0.8
B2.045	REPLACE TIME DELAY	0.3
B2.050	REPLACE CIRCUIT BREAKER	0.3
B2.053	REPLACE 1A SPEED CONTACTOR	1.0
B2.055	REPLACE FORWARD SPEED CONTACTOR	1.0
B2.057	REPLACE LOWERING SOLENOID COIL	0.3
B2.058	REPLACE REVERSER RELAY	0.5
B2.059	REPLACE HANDLE HEAD HARNESS	1.0
B2.063	REPLACE HANDLE HARNESS	1.5
B2.064	REPLACE LIFT SWITCH	0.5
B2.065	REPLACE LOWER SWITCH	0.5
B2.066	REPLACE REVERSER SWITCH	1.0
B2.067	REPLACE LIFT SWITCH (HANDRAIL)	0.5
B2.068	REPLACE LOWER SWITCH (HANDRAIL)	0.5
B2.069	REPLACE LIFT LIMIT SWITCH	0.5
B2.073	REPLACE DRIVE MOTOR BRUSHES	1.5
B2.074	REPLACE PUMP MOTOR BRUSHES	1.5
B2.080	REPLACE COLD STORAGE THERMOSTAT	0.3
B2.081	REPLACE COLD STORAGE HEATER	1.0

HYDRAULIC

PROB. CODE	OPERATION DESCRIPTION	TIME
B3.001	REPLACE RESERVOIR	1.5
B3.011	REPLACE ANY HYDRAULIC HOSE	0.7
B3.013	REPLACE LIFT PUMP	2.0
B3.017	REPLACE LIFT PUMP CHECK VALVE	0.5
B3.018	REPLACE LIFT CYLINDER	2.0
B3.019	RESEAL LIFT CYLINDER	2.5
B3.021	REPLACE LIFT PUMP / MOTOR ASSY	1.5
B3.022	REPLACE LOWERING VALVE	0.5

WF50/65/80(B)/WA65/80(B)

FRAME

PROB.		
CODE	**OPERATION DESCRIPTION**	**TIME**
B4.009	REPLACE PIVOT BEARING	3.5
B4.013	REPLACE LOAD WHEEL	0.5
B4.018	REPLACE PULL ROD	2.5
B4.019	REPLACE WHEEL FORK	1.0
B4.020	REPLACE LIFT FRAME	4.0
B4.021	REPLACE LOWER LINK/LIFT FRAME	2.0
B4.022	REPLACE CARRIER FRAME	4.0
B4.023	REPLACE STABILIZER CASTER	0.6
B4.024	REPLACE CASTER WHEEL	0.5
B4.025	REPLACE STABILIZER CASTER SPRING	0.7
B4.026	REPLACE PLATFORM CUSHION BUMPER	0.5

OP30

TRANSMISSION

PROB. CODE	OPERATION DESCRIPTION	TIME
C1.001	REMOVE AND REPLACE	3.0
C1.002	REPLACE AXLE SEAL	1.0
C1.003	REPLACE DRIVE AXLE	4.5
C1.004	REBUILD/RECONDITION	6.5
C1.005	REPLACE BRAKE SEPERATORS / DISCS	4.5
C1.008	REPLACE SLAVE CYLINDER	0.8
C1.009	REBUILD SLAVE CYLINDER	1.0
C1.010	REPLACE BRAKE HYDRAULIC HOSE	1.0
C1.012	REPLACE DRIVE TIRE	0.6

ELECTRICAL

PROB. CODE	OPERATION DESCRIPTION	TIME
C2.001	REPLACE HORN	0.5
C2.002	REPLACE BDI	0.8
C2.003	REPLACE HOURMETER	0.8
C2.004	REPLACE ACCESSORY WIRING HARNESS	2.0
C2.005	REPLACE KEY SWITCH	1.0
C2.006	REPLACE BRAKE INTERLOCK SWITCH	0.5
C2.007	REPLACE START SWITCH	1.0
C2.009	REPLACE HORN SWITCH	1.0
C2.010	REPLACE MASTER CONTROL SWITCH	2.0
C2.011	REPLACE EMERGENCY DISCONNECT BUTTON	1.0
C2.012	REPLACE EMERGENCY DISCONNECT INTERLOCK	0.5
C2.013	REPLACE EMERGENCY DISCONNECT CONTACTOR	1.0
C2.014	REPLACE POTENTIOMETER	1.0
C2.015	REPLACE DRIVE MOTOR	2.5
C2.018	REPLACE FORWARD / REVERSE CONTACTOR	0.7
C2.020	REPLACE 1A CONTACTOR	0.7
C2.021	REPLACE LIFT PUMP CONTACTOR	0.7
C2.022	REPLACE STEERING CONTACTOR	0.7
C2.023	REPLACE FORWARD CONTACTOR COIL	1.0
C2.024	REPLACE REVERSE CONTACTOR COIL	1.0
C2.025	REPLACE 1A CONTACTOR COIL	1.0
C2.026	REPLACE LIFT PUMP CONTACTOR COIL	1.0
C2.027	REPLACE STEER PUMP CONTACTOR COIL	1.0
C2.028	REPLACE EV100 LX CARD	1.5
C2.029	REPLACE NUMBER 1 SCR	1.0
C2.030	REPLACE NUMBER 2 SCR	0.8

CONTINUED

ELECTRICAL CONTINUED

PROB. CODE	OPERATION DESCRIPTION	TIME
C2.031	REPLACE NUMBER 5 SCR	0.8
C2.032	REPLACE NUMBER 3 SCR	0.6
C2.033	REPLACE NUMBER 4 SCR	0.6
C2.034	REPLACE CAPACITOR	1.1
C2.035	REPLACE REACTOR	1.1
C2.036	REPLACE BATTERY CONNECTOR	0.5
C2.037	REPLACE ONE POWER CABLE	0.7
C2.038	REPAIR ONE OPEN WIRE	1.0
C2.039	REPLACE LIFT PUMP MOTOR	1.5
C2.043	REPLACE LIFT PUMP VALVE COIL	0.5
C2.046	REPLACE BRAKE VALVE COIL	0.5
C2.058	REPLACE MAST CABLE	2.5
C2.059	REPLACE 24" LIMIT SWITCH	1.0
C2.060	REPLACE 150" LIMIT SWITCH	1.0
C2.061	REPLACE 226" LIMIT SWITCH	1.0
C2.062	REPLACE TURN ANGLE LIMIT SWITCH	0.5
C2.063	REPLACE CHAIN TENISION SWITCH	0.5
C2.064	REPLACE GATE SWITCH	1.0
C2.065	REPLACE LIFT / LOWER SWITCH	1.5
C2.074	REPLACE DRIVE MOTOR BRUSHES	1.0
C2.075	REPLACE PUMP MOTOR BRUSHES	1.0
C2.076	REPLACE STEER MOTOR BRUSHES	1.0
C2.077	REPLACE STEER PUMP MOTOR	2.0
C2.079	REPLACE STORBE LIGHT	0.5
C2.080	REPLACE WORK LIGHT	0.5
C2.081	REPLACE DOME LIGHT	0.5
C2.082	REPLACE FAN	0.7

HYDRAULIC

PROB. CODE	OPERATION DESCRIPTION	TIME
C3.001	REPLACE RESERVOIR	2.0
C3.002	REPLACE LIFT PUMP SOLENOID VALVE	1.0
C3.006	REPLACE FREE LIFT CYLINDER	3.5
C3.007	RESEAL FREE LIFT CYLINDER	1.0
C3.008	REPLACE STAGING CYLINDER	3.5
C3.009	RESEAL STAGING CYLINDER	1.2
C3.011	REPLACE ANY HYDRAULIC HOSE	1.3
C3.012	REPLACE VELOCITY FUSE	0.8

CONTINUED

OP30

HYDRAULIC CONTINUED

PROB. CODE	OPERATION DESCRIPTION	TIME
C3.013	REPLACE LIFT PUMP	2.0
C3.014	REPLACE LOWERING VALVE	1.0
C3.015	REPLACE TORQUE GNERATOR	2.2
C3.017	REPLACE BRAKE VALVE	0.8
C3.022	REPLACE STEER PUMP	2.0

FRAME

PROB. CODE	OPERATION DESCRIPTION	TIME
C4.003	REPLACE CONTROL HANDLE	2.0
C4.004	REPLACE CONTROL HANDLE SUPPORT	1.5
C4.007	REPLACE TRANSIMSSION ECCENTRIC BEARING (ONE)	1.0
C4.008	EACH ADDITIONAL BEARING	0.3
C4.009	REPLACE PIVOT BEARING	1.5
C4.010	ADJUST STEER CABLE	0.5
C4.011	ADJUST STEER CHAIN	0.5
C4.012	REPLACE STEER CABLE	2.5
C4.013	REPLACE LOAD WHEEL	0.8
C4.014	REPLACE STEER CHAIN (TORQUE GENERATOR TO SHAFT)	1.0
C4.015	REPLACE STEER CHAIN (SHAFT TO CABLE)	1.0
C4.016	REPLACE STEER CHAIN (TORQUE GENERATOR TO TRANS-MISSION)	1.2

MAST

PROB. CODE	OPERATION DESCRIPTION	TIME
C5.001	SHIM CARRIAGE	3.5
C5.002	SHIM INNER COLUMN	4.5
C5.003	SHIM INTERMEDIATE COLUMN	5.0
C5.004	REPLACE CARRIAGE ROLLER	3.5
C5.005	REPLACE INNER COLUMN ROLLER	4.5
C5.006	REPLACE INTERMEDIATE COLUMN ROLLER	5.0
C5.007	INSTALL MAST AND PLATFORM	2.5
C5.008	REPLACE CARRIAGE ROLLER	3.5
C5.009	REPLACE INNER COLUMN ROLLER	4.5
C5.010	REPLACE INTERMEDIATE COLUMN ROLLER	5.0

NR30/40

TRANSMISSION

PROB. CODE	OPERATION DESCRIPTION	TIME
D1.001	REMOVE AND REPLACE	2.5
D1.002	REPLACE AXLE SEAL	1.6
D1.003	REPLACE DRIVE AXLE	5.5
D1.004	REBUILD/RECONDITION	10.0
D1.005	REPLACE SUPPORT YOKE BEARING	3.0
D1.011	ADJUST BRAKE	0.8
D1.012	REPLACE DRIVE TIRE	0.6
D1.013	REPLACE BRAKE SHOES	1.2
D1.014	REPLACE SUPPORT YOKE	3.0
D1.016	REPLACE BRAKE PEDAL	1.0
D1.017	REPLACE BRAKE CABLE	1.5

ELECTRICAL

PROB. CODE	OPERATION DESCRIPTION	TIME
D2.001	REPLACE HORN	0.5
D2.002	REPLACE BDI	0.5
D2.003	REPLACE HOURMETER	0.5
D2.004	REPLACE ACCESSORY WIRING HARNESS	1.0
D2.005	REPLACE KEY SWITCH	0.5
D2.006	REPLACE BRAKE SWITCH	0.5
D2.007	REPLACE LIFT VALVE SWITCH	1.5
D2.008	REPLACE AUXILIARY VALVE SWITCH	1.5
D2.009	REPLACE HORN SWITCH	1.0
D2.010	REPLACE MASTER CONTROL SWITCH	1.2
D2.014	REPLACE POTENTIOMETER	1.0
D2.015	REPLACE DRIVE MOTOR	2.5
D2.016	REPLACE DRIVE MOTOR ARMATIURE	3.5
D2.017	REPLACE DRIVE MOTOR FIELDS	3.5
D2.018	REPLACE FORWARD / REVERSE CONTACTOR	0.7
D2.020	REPLACE 1A CONTACTOR	0.7
D2.021	REPLACE LIFT PUMP CONTACTOR	0.7
D2.022	REPLACE AUXILIARY PUMP CONTACTOR	0.7
D2.023	REPLACE FORWARD CONTACTOR COIL	1.0
D2.024	REPLACE REVERSE CONTACTOR COIL	1.0
D2.025	REPLACE 1A CONTACTOR COIL	1.0
D2.027	REPLACE STEER PUMP CONTACTOR COIL	1.0
D2.028	REPLACE EV100 LX CARD	1.5
D2.029	REPLACE NUMBER 1 SCR	1.0

CONTINUED

NR30/40

ELECTRICAL CONTINUED

PROB. CODE	OPERATION DESCRIPTION	TIME
D2.030	REPLACE NUMBER 2 SCR	0.8
D2.031	REPLACE NUMBER 5 SCR	0.8
D2.032	REPLACE NUMBER 3 SCR	0.6
D2.033	REPLACE NUMBER 4 SCR	0.6
D2.034	REPLACE CAPACITOR	1.1
D2.035	REPLACE REACTOR	1.1
D2.036	REPLACE BATTERY CONNECTOR	0.6
D2.037	REPLACE ONE POWER CABLE	1.0
D2.038	REPAIR ONE OPEN WIRE	1.0
D2.039	REPLACE LIFT PUMP MOTOR	1.5
D2.040	REPLACE LIFT PUMP MOTOR ARMATURE	1.8
D2.041	REPLACE LIFT PUMP MOTOR FIELDS	1.8
D2.042	REPLACE SPEED LIMIT SWITCH	1.0
D2.043	REPLACE MAST ELECTRICAL CABLE	3.5
D2.044	REPLACE CHASSIS WIRING HARNESS	3.5
D2.045	REPLACE ONE HYDRAULIC SOLENOID COIL	0.5
D2.046	REPLACE REACH WIRING HARNESS	1.5
D2.047	REPLACE STEER PUMP MOTOR	1.5
D2.048	REPLACE STEER MOTOR ARMATURE	2.0
D2.049	REPLACE STEER MOTOR FIELD COIL	2.0
D2.050	REPLACE AUXILIARY VALVE COIL	1.0
D2.051	REPLACE SELECTOR SWITCH	1.5
D2.052	REPLACE AUXILIARY SWITCH	1.5
D2.053	REPLACE INDICATOR LIGHTS	0.5
D2.070	REPLACE FORWARD / REVERSE CONTACTOR TIPS	1.0
D2.071	REPLACE 1A CONTACTOR TIPS	0.5
D2.072	REPLACE PUMP MOTOR CONTACTOR TIPS	0.5
D2.073	REPLACE AUXILIARY PUMP MOTOR CONTACTOR TIPS	0.5
D2.074	REPLACE DRIVE MOTOR BRUSHES	2.0
D2.075	REPLACE PUMP MOTOR BRUSHES	2.0
D2.076	REPLACE AUXILIARY MOTOR BRUSHES	1.0

HYDRAULIC

PROB. CODE	OPERATION DESCRIPTION	TIME
D3.001	REPLACE RESERVOIR	1.5
D3.002	REPLACE LIFT VALVE	1.5
D3.003	RESEAL LIFT VALVE	2.0
D3.004	REPLACE TILT CYLINDER	1.0

CONTINUED

HYDRAULIC CONTINUED

PROB. CODE	OPERATION DESCRIPTION	TIME
D3.005	RESEAL TILT CYLINDER	2.0
D3.006	REPLACE FREE LIFT CYLINDER	3.0
D3.007	RESEAL FREE LIFT CYLINDER	1.0
D3.008	REPLACE STAGING CYLINDER	3.5
D3.009	RESEAL STAGING CYLINDER	1.2
D3.011	REPLACE ANY HYDRAULIC HOSE	1.3
D3.012	REPLACE VELOCITY FUSE	0.8
D3.013	REPLACE LIFT PUMP	3.0
D3.014	RESEAL LIFT PUMP	3.5
D3.015	REPLACE AUXILIARY PUMP	1.5
D3.016	RESEAL AUXILIARY PUMP	2.0
D3.017	REPLACE TORQUE GENERATOR	1.5
D3.018	RESEAL TORQUE GENERATOR	2.0
D3.019	REPLACE HYDRAULIC SOLENOID VALVE	1.0
D3.020	REPLACE REACH CYLINDER	1.5
D3.021	RESEAL REACH CYLINDER	2.0
D3.022	REPLACE SIDE SHIFT CYLINDER	1.5
D3.023	RESEAL SIDE SHIFT CYLINDER	2.0
D3.024	REPLACE AUXILIARY VALVE	1.5

FRAME

PROB. CODE	OPERATION DESCRIPTION	TIME
D4.003	REPLACE CONTROL HANDLE	1.0
D4.006	REPLACE CASTER WHEEL	1.5
D4.007	REPLACE UPPER / LOWER SHAFT SPROCKET	2.5
D4.008	REPLACE TRANSMISSION SPROCKET	2.0
D4.013	REPLACE LOAD WHEEL	1.2
D4.027	REPLACE UPPER STEER CHAIN	1.5
D4.028	REPLACE LOWER STEER CHAIN	1.5

NR30/40

MAST

PROB. CODE	OPERATION DESCRIPTION	TIME
D5.001	SHIM CARRIAGE	2.5
D5.002	SHIM INNER COLUMN	4.0
D5.003	SHIM INTERMEDIATE COLUMN	4.5
D5.004	REPLACE CARRIAGE ROLLER	2.5
D5.005	REPLACE INNER COLUMN ROLLER	4.0
D5.006	REPLACE INTERMEDIATE COLUMN ROLLER	4.5
D5.007	INSTALL MAST	2.5

REACH

PROB. CODE	OPERATION DESCRIPTION	TIME
D5.008	REPLACE CENTER PIVOT BEARING	3.0
D5.010	REPLACE FRONT FRAME	3.0
D5.011	REPLACE REAR FRAME	5.0
D5.012	REPLACE ARM ROLLER	2.0
D5.013	RECONDITION SINGLE REACH	6.0
D5.014	INSTALL SIDE SHIFT	3.0
D5.015	RECONDITION DEEP REACH	8.0

NR45

TRANSMISSION

PROB. CODE	OPERATION DESCRIPTION	TIME
E1.001	REMOVE AND REPLACE	2.5
E1.002	REPLACE AXLE SEAL	1.6
E1.003	REPLACE DRIVE AXLE	5.5
E1.004	REBUILD/RECONDITION	10.0
E1.005	REPLACE SUPPORT YOKE BEARING	3.0
E1.006	REPLACE MASTER CYLINDER	1.2
E1.007	REBUILD MASTER CYLINDER	1.7
E1.008	REPLACE SLAVE CYLINDER	1.5
E1.009	REBUILD SLAVE CYLINDER	2.0
E1.010	REPLACE BRAKE HYDRAULIC HOSE	1.2
E1.011	ADJUST BRAKE	0.5
E1.012	REPLACE DRIVE TIRE	0.6
E1.013	REPLACE BRAKE SHOES	1.2
E1.014	REPLACE SUPPORT YOKE	3.0
E1.016	REPLACE BRAKE PEDAL	1.0

ELECTRICAL

PROB. CODE	OPERATION DESCRIPTION	TIME
E2.001	REPLACE HORN	0.5
E2.002	REPLACE BDI	0.5
E2.003	REPLACE HOURMETER	0.5
E2.004	REPLACE ACCESSORY WIRING HARNESS	1.0
E2.005	REPLACE KEY SWITCH	0.5
E2.006	REPLACE BRAKE SWITCH	0.5
E2.007	REPLACE LIFT VALVE SWITCH	1.5
E2.008	REPLACE AUXILIARY VALVE SWITCH	1.5
E2.009	REPLACE HORN SWITCH	1.0
E2.010	REPLACE MASTER CONTROL SWITCH	1.2
E2.011	REPLACE Z-LIFT SWITCH	1.0
E2.014	REPLACE POTENTIOMETER	1.0
E2.015	REPLACE DRIVE MOTOR	2.5
E2.016	REPLACE DRIVE MOTOR ARMATIURE	3.5
E2.017	REPLACE DRIVE MOTOR FIELDS	3.5
E2.018	REPLACE FORWARD / REVERSE CONTACTOR	0.7
E2.020	REPLACE 1A CONTACTOR	0.7
E2.021	REPLACE LIFT PUMP CONTACTOR	0.7
E2.022	REPLACE AUXILIARY PUMP CONTACTOR	0.7
E2.023	REPLACE FORWARD CONTACTOR COIL	1.0

CONTINUED

NR45

ELECTRICAL CONTINUED		
PROB. CODE	OPERATION DESCRIPTION	TIME
E2.024	REPLACE REVERSE CONTACTOR COIL	1.0
E2.025	REPLACE 1A CONTACTOR COIL	1.0
E2.026	REPLACE LIFT PUMP CONTACTOR COIL	1.0
E2.027	REPLACE STEER PUMP CONTACTOR COIL	1.0
E2.028	REPLACE EV100 LX CARD	1.5
E2.029	REPLACE NUMBER 1 SCR	1.0
E2.030	REPLACE NUMBER 2 SCR	0.8
E2.031	REPLACE NUMBER 5 SCR	0.8
E2.032	REPLACE NUMBER 3 SCR	0.6
E2.033	REPLACE NUMBER 4 SCR	0.6
E2.034	REPLACE CAPACITOR	1.1
E2.035	REPLACE REACTOR	1.1
E2.036	REPLACE BATTERY CONNECTOR	0.6
E2.037	REPLACE ONE POWER CABLE	1.0
E2.038	REPAIR ONE OPEN WIRE	1.0
E2.039	REPLACE LIFT PUMP MOTOR	1.5
E2.040	REPLACE LIFT PUMP MOTOR ARMATURE	1.8
E2.041	REPLACE LIFT PUMP MOTOR FIELDS	1.8
E2.042	REPLACE SPEED LIMIT SWITCH	1.0
E2.043	REPLACE MAST ELECTRICAL CABLE	3.5
E2.044	REPLACE CHASSIS WIRING HARNESS	3.5
E2.045	REPLACE ONE HYDRAULIC SOLENOID COIL	0.5
E2.046	REPLACE REACH WIRING HARNESS	1.5
E2.047	REPLACE STEER PUMP MOTOR	1.5
E2.048	REPLACE STEER MOTOR ARMATURE	2.0
E2.049	REPLACE STEER MOTOR FIELD COIL	2.0
E2.050	REPLACE AUXILIARY VALVE COIL	1.0
E2.051	REPLACE SELECTOR SWITCH	1.5
E2.052	REPLACE AUXILIARY SWITCH	1.5
E2.053	REPLACE INDICATOR LIGHTS	0.5
E2.070	REPLACE FORWARD / REVERSE CONTACTOR TIPS	1.0
E2.071	REPLACE 1A CONTACTOR TIPS	0.5
E2.072	REPLACE PUMP MOTOR CONTACTOR TIPS	0.5
E2.073	REPLACE AUXILIARY PUMP MOTOR CONTACTOR TIPS	0.5
E2.074	REPLACE DRIVE MOTOR BRUSHES	2.0
E2.075	REPLACE PUMP MOTOR BRUSHES	2.0
E2.076	REPLACE AUXILIARY MOTOR BRUSHES	1.0

NR45

HYDRAULIC

PROB. CODE	OPERATION DESCRIPTION	TIME
E3.001	REPLACE RESERVOIR	1.5
E3.002	REPLACE LIFT VALVE	1.5
E3.003	RESEAL LIFT VALVE	2.0
E3.004	REPLACE TILT CYLINDER	1.0
E3.005	RESEAL TILT CYLINDER	2.0
E3.006	REPLACE FREE LIFT CYLINDER	3.0
E3.007	RESEAL FREE LIFT CYLINDER	1.0
E3.008	REPLACE STAGING CYLINDER	3.5
E3.009	RESEAL STAGING CYLINDER	1.2
E3.011	REPLACE ANY HYDRAULIC HOSE	1.3
E3.012	REPLACE VELOCITY FUSE	0.8
E3.013	REPLACE LIFT PUMP	3.0
E3.014	RESEAL LIFT PUMP	3.5
E3.015	REPLACE AUXILIARY PUMP	1.5
E3.016	RESEAL AUXILIARY PUMP	2.0
E3.017	REPLACE STEER CYLINDER	3.0
E3.018	RESEAL STEER CYLINDER	3.5
E3.019	REPLACE HYDRAULIC SOLENOID VALVE	1.0
E3.020	REPLACE REACH CYLINDER	1.5
E3.021	RESEAL REACH CYLINDER	2.0
E3.022	REPLACE SIDE SHIFT CYLINDER	1.5
E3.023	RESEAL SIDE SHIFT CYLINDER	2.0
E3.024	REPLACE AUXILIARY VALVE	1.5

FRAME

PROB. CODE	OPERATION DESCRIPTION	TIME
E4.001	REPLACE ARTICULATING FRAME	6.5
E4.002	ADJUST ARTICULATING STOPS	0.5
E4.003	REPLACE CONTROL HANDLE	1.0
E4.004	REPLACE IDLER WHEEL	1.0
E4.013	REPLACE LOAD WHEEL	1.2
E4.014	RECONDITION STEER AXLE	7.5

NR45

MAST

PROB. CODE	OPERATION DESCRIPTION	TIME
E5.001	SHIM CARRIAGE	2.5
E5.002	SHIM INNER COLUMN	4.0
E5.003	SHIM INTERMEDIATE COLUMN	4.5
E5.004	REPLACE CARRIAGE ROLLER	2.5
E5.005	REPLACE INNER COLUMN ROLLER	4.0
E5.006	REPLACE INTERMEDIATE COLUMN ROLLER	4.5
E5.007	INSTALL MAST	2.5

REACH

PROB. CODE	OPERATION DESCRIPTION	TIME
E5.008	REPLACE CENTER PIVOT BEARING	3.0
E5.010	REPLACE FRONT FRAME	3.0
E5.011	REPLACE REAR FRAME	5.0
E5.012	REPLACE ARM ROLLER	2.0
E5.013	RECONDITION SINGLE REACH	6.0
E5.014	INSTALL SIDE SHIFT	3.0
E5.015	RECONDITION DEEP REACH	8.0

WB60-80(B)

TRANSMISSION

PROB. CODE	OPERATION DESCRIPTION	TIME
F1.001	REMOVE AND REPLACE	1.5
F1.002	REPLACE AXLE SEAL	1.0
F1.003	REPLACE DRIVE AXLE	2.5
F1.004	REBUILD/RECONDITION	4.5
F1.006	REPLACE CONTROL HANDLE HEAD	1.0
F1.007	REPLACE CONTROL HANDLE STEM	1.0
F1.008	REPLACE HAND GUARD	0.7
F1.010	REPLACE BRAKE SPRING	1.0
F1.011	ADJUST BRAKE	0.3
F1.012	REPLACE DRIVE TIRE	0.5
F1.013	REPLACE BRAKE SHOE	1.0

ELECTRICAL

PROB. CODE	OPERATION DESCRIPTION	TIME
F2.001	REPLACE HORN	0.3
F2.002	REPLACE BDI	0.5
F2.003	REPLACE HOURMETER	0.5
F2.004	REPLACE BACKREST WIRING HARNESS	1.0
F2.005	REPLACE KEY SWITCH	0.5
F2.006	REPLACE BRAKE SWITCH	0.5
F2.007	REPLACE EMERGENCY DISCONNECT SWITCH	0.3
F2.009	REPLACE HORN SWITCH	0.8
F2.010	REPLACE FORWARD/REVERSE SWITCH	0.5
F2.013	REPLACE LINE CONTACTOR	0.5
F2.014	REPLACE POTENTIOMETER	0.5
F2.015	REPLACE DRIVE MOTOR	2.0
F2.021	REPLACE LIFT PUMP CONTACTOR	0.5
F2.028	REPLACE TRANSISTOR CONTROLLER	0.8
F2.036	REPLACE BATTERY CONNECTOR	0.6
F2.037	REPLACE ONE POWER CABLE	1.0
F2.038	REPAIR ONE OPEN WIRE	0.5
F2.039	REPLACE LIFT PUMP MOTOR	1.5
F2.042	RESEAL LIFT PUMP MOTOR	1.8
F2.045	REPLACE TIME DELAY	0.3
F2.050	REPLACE CIRCUIT BREAKER	0.3
F2.058	REPLACE HIGH SPEED RELAY	0.5
F2.059	REPLACE HANDLE HEAD HARNESS	1.0
F2.063	REPLACE HANDLE HARNESS	1.5

CONTINUED

WB60-80(B)

ELECTRICAL CONTINUED

PROB. CODE	OPERATION DESCRIPTION	TIME
F2.064	REPLACE LIFT SWITCH	0.5
F2.065	REPLACE LOWER SWITCH	0.5
F2.068	REPLACE BACKREST LIFT/LOWER SWITCH	0.5
F2.069	REPLACE LIFT LIMIT SWITCH	0.5
F2.073	REPLACE DRIVE MOTOR BRUSHES	1.5
F2.074	REPLACE PUMP MOTOR BRUSHES	1.5
F2.080	REPLACE COLD STORAGE THERMOSTAT	0.3
F2.081	REPLACE COLD STORAGE HEATER	1.0
F2.082	REPLACE PLATFORM SWITCH	0.7
F2.083	REPLACE K-TRAK TOGGLE SWITCH	0.3
F2.084	REPLACE K-TRAK LIMIT SWITCH	0.3
F2.085	REPLACE K-TRAK SOLENOID COIL	0.3
F2.086	REPLACE K-TRAK PUMP CONTACTOR	0.3

HYDRAULIC

PROB. CODE	OPERATION DESCRIPTION	TIME
F3.001	REPLACE RESERVOIR	1.5
F3.011	REPLACE ANY HYDRAULIC HOSE	0.7
F3.013	REPLACE LIFT PUMP	2.0
F3.017	REPLACE LIFT PUMP CHECK VALVE	0.5
F3.018	REPLACE LIFT CYLINDER	2.0
F3.019	RESEAL LIFT CYLINDER	2.5
F3.021	REPLACE LIFT PUMP / MOTOR ASSY	1.5
F3.022	REPLACE LOWERING VALVE	0.3
F3.025	REPLACE K-TRAK CYLINDER	1.0
F3.026	RESEAL K-TRAK CYLINDER	1.5
F3.027	REPLACE K-TRAK PUMP	1.5
F3.028	REPLACE K-TRAK SOLENOID VALVE	0.8

WB60-80(B)

FRAME

PROB.		
CODE	**OPERATION DESCRIPTION**	**TIME**
F4.009	REPLACE PIVOT BEARING	3.5
F4.013	REPLACE LOAD WHEEL	0.5
F4.018	REPLACE PULL ROD	2.5
F4.019	REPLACE WHEEL FORK	1.0
F4.020	REPLACE LIFT FRAME	4.0
F4.021	REPLACE LOWER LINK/LIFT FRAME	2.0
F4.022	REPLACE CARRIER FRAME	4.0
F4.023	REPLACE STABILIZER CASTER	0.6
F4.024	REPLACE CASTER WHEEL	0.5
F4.025	REPLACE STABILIZER CASTER SPRING	0.7
F4.026	REPLACE PLATFORM CUSHION BUMPER	0.5

WC20/30/40

TRANSMISSION

PROB. CODE	OPERATION DESCRIPTION	TIME
G1.001	REMOVE AND REPLACE	1.5
G1.002	REPLACE AXLE SEAL	1.0
G1.003	REPLACE DRIVE AXLE	2.5
G1.004	REBUILD/RECONDITION	4.5
G1.006	REPLACE CONTROL HANDLE HEAD	1.5
G1.007	REPLACE CONTROL HANDLE STEM	1.0
G1.008	REPLACE HAND GUARD	0.7
G1.009	REPLACE HANDLE SPRING	0.7
G1.010	REPLACE BRAKE SPRING	1.0
G1.011	ADJUST BRAKE	0.3
G1.012	REPLACE DRIVE TIRE	0.5
G1.013	REPLACE BRAKE SHOE	1.0
G1.014	REPLACE HANDLE BUMPER	0.3

ELECTRICAL

PROB. CODE	OPERATION DESCRIPTION	TIME
G2.001	REPLACE HORN	0.3
G2.002	REPLACE BDI	0.5
G2.003	REPLACE HOURMETER	0.5
G2.005	REPLACE KEY SWITCH	0.5
G2.006	REPLACE BRAKE SWITCH	0.5
G2.007	REPLACE EMERGENCY DISCONNECT SWITCH	0.5
G2.010	REPLACE DIRECTIONAL CONTROL SWITCH	0.5
G2.013	REPLACE LINE CONTACTOR	0.5
G2.014	REPLACE POTENTIOMETER	0.5
G2.015	REPLACE DRIVE MOTOR	2.0
G2.021	REPLACE LIFT PUMP CONTACTOR	0.5
G2.023	REPLACE CONTROL VALVE SWITCH	0.5
G2.028	REPLACE TRANSISTOR CONTROLLER	0.8
G2.036	REPLACE BATTERY CONNECTOR	0.6
G2.037	REPLACE ONE POWER CABLE	1.0
G2.038	REPAIR ONE OPEN WIRE	0.5
G2.039	REPLACE LIFT PUMP MOTOR	1.5
G2.044	REPLACE HYDRAULIC CONTROL HANDLE SWITCH	0.8
G2.045	REPLACE HYDRAULIC SOLENOID COIL	0.5
G2.050	REPLACE CIRCUIT BREAKER	0.5
G2.057	REPLACE LOWERING SOLENOID COIL	0.3
G2.059	REPLACE HANDLE HEAD HARNESS	1.0

CONTINUED

ELECTRICAL CONTINUED

PROB. CODE	OPERATION DESCRIPTION	TIME
G2.063	REPLACE HANDLE HARNESS	1.5
G2.064	REPLACE LIFT SWITCH	0.5
G2.065	REPLACE LOWER SWITCH	0.5
G2.066	REPLACE REVERSER SWITCH	1.0
G2.073	REPLACE DRIVE MOTOR BRUSHES	1.5
G2.074	REPLACE PUMP MOTOR BRUSHES	1.0
G2.080	REPLACE COLD STORAGE THERMOSTAT	0.3
G2.081	REPLACE COLD STORAGE HEATER	1.0

HYDRAULIC

PROB. CODE	OPERATION DESCRIPTION	TIME
G3.001	REPLACE RESERVOIR	2.0
G3.002	REPLACE CONTROL VALVE	2.5
G3.004	REPLACE TWO STAGE LIFT CYLINDER	2.5
G3.005	RESEAL TWO STAGE LIFT CYLINDER	1.2
G3.006	REPLACE FREE LIFT CYINDER	2.5
G3.007	RESEAL FREE LIFT CYLINDER	1.2
G3.008	REPLACE STAGING CYLINDER	3.5
G3.009	RESEAL STAGING CYLINDER	1.2
G3.010	REPLACE HYDRAULIC FILTER	0.5
G3.011	REPLACE ANY HYDRAULIC HOSE	1.0
G3.012	REPLACE VELOCITY FUSE	1.0
G3.013	REPLACE LIFT PUMP	2.0
G3.014	REPLACE HYDRAULIC SOLENOID VALVE	0.5
G3.015	REPLACE COMPENSATOR CYLINDER	1.5
G3.016	RESEAL COMPENSATOR CYLINDER	2.0
G3.017	REPLACE LIFT PUMP CHECK VALVE	0.5
G3.018	REPLACE HYDRAULIC SOLENOID VALVE	0.5
G3.021	REPLACE LIFT PUMP/MOTOR ASSY	1.5
G3.024	REPLACE TILT CYLINDER	1.0
G3.025	RESEAL TILT CYLINDER	1.5
G3.026	REPLACE SIDE SHIFT CYLINDER	1.0
G3.027	RESEAL SIDE SHIFT CYLINDER	1.5

WC20/30/40

FRAME

PROB. CODE	OPERATION DESCRIPTION	TIME
G4.009	REPLACE TRANSMISSION PIVOT BEARING	1.5
G4.013	REPLACE LOAD WHEEL	0.5
G4.023	REPLACE STABILIZER CASTER	0.6
G4.024	REPLACE CASTER WHEEL	0.5
G4.025	REPLACE STABILIZER CASTER SPRING	0.7
G4.026	REPLACE PLATFORM CUSHION BUMPER	0.5

MAST

PROB. CODE	OPERATION DESCRIPTION	TIME
G5.001	SHIM CARRIAGE	2.0
G5.002	SHIM INNER COLUMN	3.0
G5.003	SHIM INTERMEDIATE COLUMN	3.0
G5.004	REPLACE CARRIAGE ROLLER	2.5
G5.005	REPLACE INNER COLUMN ROLLER	3.5
G5.006	REPLACE INTERMEDIATE COLUMN ROLLER	3.5
G5.014	INSTALL SIDESHIFTER	3.0

WT750(B)

TRANSMISSION

PROB. CODE	OPERATION DESCRIPTION	TIME
H1.001	REMOVE AND REPLACE	1.5
H1.002	REPLACE AXLE SEAL	1.0
H1.003	REPLACE DRIVE AXLE	2.5
H1.004	REBUILD/RECONDITION	4.5
H1.006	REPLACE CONTROL HANDLE HEAD	1.5
H1.007	REPLACE CONTROL HANDLE STEM	1.5
H1.008	REPLACE HAND GUARD	1.0
H1.010	REPLACE BRAKE SPRING	1.0
H1.011	ADJUST BRAKE	0.3
H1.012	REPLACE DRIVE TIRE	0.5
H1.013	REPLACE BRAKE SHOE	1.0

ELECTRICAL

PROB. CODE	OPERATION DESCRIPTION	TIME
H2.001	REPLACE HORN	0.3
H2.002	REPLACE BDI	0.5
H2.003	REPLACE HOURMETER	0.5
H2.005	REPLACE KEY SWITCH	0.5
H2.006	REPLACE BRAKE SWITCH	0.3
H2.007	REPLACE EMERGENCY DISCONNECT SWITCH	0.5
H2.009	REPLACE HORN SWITCH	0.8
H2.010	REPLACE FORWARD/REVERSE SWITCH	0.5
H2.013	REPLACE LINE CONTACTOR	0.5
H2.014	REPLACE POTENTIOMETER	0.5
H2.015	REPLACE DRIVE MOTOR	1.5
H2.028	REPLACE TRANSISTOR CONTROLLER	0.8
H2.036	REPLACE BATTERY CONNECTOR	0.6
H2.037	REPLACE ONE POWER CABLE	1.0
H2.038	REPAIR ONE OPEN WIRE	0.5
H2.045	REPLACE TIME DELAY	0.5
H2.050	REPLACE CIRCUIT BREAKER	0.5
H2.053	REPLACE 1A FORWARD CONTACTOR	1.0
H2.055	REPLACE FORWARD SPEED CONTACTOR	0.8
H2.058	REPLACE HIGH SPEED RELAY	0.5
H2.059	REPLACE HANDLE HEAD HARNESS	1.0
H2.062	REPLACE PLATFORM SWITCH	0.7
H2.063	REPLACE HANDLE HARNESS	1.5

CONTINUED

WT750(B)

ELECTRICAL CONTINUED

PROB. CODE	OPERATION DESCRIPTION	TIME
H2.073	REPLACE DRIVE MOTOR BRUSHES	1.5
H2.080	REPLACE COLD STORAGE THERMOSTAT	0.3
H2.081	REPLACE COLD STORAGE HEATER	1.0

FRAME

PROB. CODE	OPERATION DESCRIPTION	TIME
H4.009	REPLACE TRANSMISSION PIVOT BEARING	3.5
H4.013	REPLACE LOAD WHEEL	0.5
H4.026	REPLACE PLATFORM CUSHION BUMPER	0.5

WS22/30/40

TRANSMISSION

PROB. CODE	OPERATION DESCRIPTION	TIME
J1.001	REMOVE AND REPLACE	1.5
J1.002	REPLACE AXLE SEAL	1.0
J1.003	REPLACE DRIVE AXLE	2.5
J1.004	REBUILD/RECONDITION	4.5
J1.006	REPLACE CONTROL HANDLE HEAD	1.5
J1.007	REPLACE CONTROL HANDLE STEM	1.0
J1.008	REPLACE HAND GUARD	0.7
J1.009	REPLACE HANDLE SPRING	0.7
J1.010	REPLACE BRAKE SPRING	0.5
J1.011	ADJUST BRAKE	0.3
J1.012	REPLACE DRIVE TIRE	0.5
J1.013	REPLACE BRAKE SHOE	1.0
J1.014	REPLACE HANDLE BUMPER	0.3

ELECTRICAL

PROB. CODE	OPERATION DESCRIPTION	TIME
J2.001	REPLACE HORN	0.3
J2.002	REPLACE BDI	0.5
J2.003	REPLACE HOURMETER	0.5
J2.005	REPLACE KEY SWITCH	0.5
J2.006	REPLACE BRAKE SWITCH	1.0
J2.007	REPLACE EMERGENCY DISCONNECT SWITCH	0.5
J2.010	REPLACE DIRECTIONAL CONTROL SWITCH	0.5
J2.013	REPLACE LINE CONTACTOR	0.5
J2.014	REPLACE POTENTIOMETER	0.5
J2.015	REPLACE DRIVE MOTOR	2.0
J2.021	REPLACE LIFT PUMP CONTACTOR	0.5
J2.023	REPLACE CONTROL VALVE SWITCH	0.5
J2.028	REPLACE TRANSISTOR CONTROLLER	0.8
J2.036	REPLACE BATTERY CONNECTOR	0.6
J2.037	REPLACE ONE POWER CABLE	1.0
J2.038	REPAIR ONE OPEN WIRE	0.5
J2.039	REPLACE LIFT PUMP MOTOR	2.0
J2.044	REPLACE HYDRAULIC CONTROL HANDLE SWITCH	0.5
J2.045	REPLACE HYDRAULIC SOLENOID COIL	0.5
J2.050	REPLACE CIRCUIT BREAKER	0.5
J2.057	REPLACE LOWERING SOLENOID COIL	0.5
J2.059	REPLACE HANDLE HEAD HARNESS	1.0

CONTINUED

ELECTRICAL CONTINUED

PROB. CODE	OPERATION DESCRIPTION	TIME
J2.063	REPLACE HANDLE HARNESS	1.5
J2.064	REPLACE LIFT SWITCH	0.5
J2.065	REPLACE LOWER SWITCH	0.5
J2.066	REPLACE REVERSER SWITCH	1.0
J2.073	REPLACE DRIVE MOTOR BRUSHES	1.0
J2.074	REPLACE PUMP MOTOR BRUSHES	1.0
J2.080	REPLACE COLD STORAGE THERMOSTAT	0.3
J2.081	REPLACE COLD STORAGE HEATER	1.0

HYDRAULIC

PROB. CODE	OPERATION DESCRIPTION	TIME
J3.001	REPLACE RESERVOIR	2.0
J3.002	REPLACE CONTROL VALVE	2.5
J3.004	REPLACE TWO STAGE LIFT CYLINDER	2.5
J3.005	RESEAL TWO STAGE LIFT CYLINDER	1.2
J3.006	REPLACE FREE LIFT CYINDER	2.5
J3.007	RESEAL FREE LIFT CYLINDER	1.2
J3.008	REPLACE STAGING CYLINDER	3.5
J3.009	RESEAL STAGING CYLINDER	1.2
J3.010	REPLACE HYDRAULIC FILTER	0.5
J3.011	REPLACE ANY HYDRAULIC HOSE	1.3
J3.012	REPLACE VELOCITY FUSE	1.0
J3.013	REPLACE LIFT PUMP	2.0
J3.014	REPLACE HYDRAULIC SOLENOID VLAVE	0.5
J3.015	REPLACE COMPENSATOR CYLINDER	1.5
J3.016	RESEAL COMPENSATOR CYLINDER	2.0
J3.017	REPLACE LIFT PUMP CHECK VALVE	0.5
J3.018	REPLACE HYDRAULIC SOLENOID VALVE	0.5
J3.021	REPLACE LIFT PUMP MOTOR ASSY	1.5
J3.024	REPLACE TILT CYLINDER	0.5
J3.025	RESEAL TILT CYLINDER	1.0
J3.026	REPLACE SIDE SHIFT CYLINDER	0.5
J3.027	RESEAL SIDE SHIFT CYLINDER	1.0

WS22/30/40

FRAME

PROB. CODE	OPERATION DESCRIPTION	TIME
J4.009	REPLACE TRANSMISSION PIVOT BEARING	1.5
J4.013	REPLACE LOAD WHEEL	0.5
J4.023	REPLACE STABILIZER CASTER	0.6
J4.024	REPLACE CASTER WHEEL	0.5
J4.025	REPLACE STABILIZER CASTER SPRING	0.7
J4.026	REPLACE PLATFORM CUSHION BUMPER	0.5

MAST

PROB. CODE	OPERATION DESCRIPTION	TIME
J5.001	SHIM CARRIAGE	2.0
J5.002	SHIM INNER COLUMN	3.0
J5.003	SHIM INTERMEDIATE COLUMN	3.0
J5.004	REPLACE CARRIAGE ROLLER	2.5
J5.005	REPLACE INNER COLUMN ROLLER	3.5
J5.006	REPLACE INTERMEDIATE COLUMN ROLLER	3.5
J5.014	INSTALL SIDESHIFTER	3.0

WR30

TRANSMISSION

PROB. CODE	OPERATION DESCRIPTION	TIME
K1.001	REMOVE AND REPLACE	1.5
K1.002	REPLACE AXLE SEAL	1.0
K1.003	REPLACE DRIVE AXLE	2.5
K1.004	REBUILD/RECONDITION	4.5
K1.006	REPLACE CONTROL HANDLE HEAD	1.5
K1.007	REPLACE CONTROL HANDLE STEM	1.0
K1.008	REPLACE HAND GUARD	0.7
K1.009	REPLACE HANDLE SPRING	0.7
K1.010	REPLACE BRAKE SPRING	0.5
K1.011	ADJUST BRAKE	0.3
K1.012	REPLACE DRIVE TIRE	0.5
K1.013	REPLACE BRAKE SHOE	1.0
K1.014	REPLACE HANDLE BUMPER	0.3

ELECTRICAL

PROB. CODE	OPERATION DESCRIPTION	TIME
K2.001	REPLACE HORN	0.3
K2.002	REPLACE BDI	0.5
K2.003	REPLACE HOURMETER	0.5
K2.005	REPLACE KEY SWITCH	0.5
K2.006	REPLACE BRAKE SWITCH	0.5
K2.007	REPLACE EMERGENCY DISCONNECT SWITCH	0.5
K2.010	REPLACE DIRECTIONAL CONTROL SWITCH	0.5
K2.013	REPLACE LINE CONTACTOR	0.5
K2.014	REPLACE POTENTIOMETER	0.5
K2.015	REPLACE DRIVE MOTOR	2.0
K2.021	REPLACE LIFT PUMP CONTACTOR	0.5
K2.023	REPLACE CONTROL VALVE SWITCH	0.5
K2.028	REPLACE TRANSISTOR CONTROLLER	0.8
K2.036	REPLACE BATTERY CONNECTOR	0.6
K2.037	REPLACE ONE POWER CABLE	1.0
K2.038	REPAIR ONE OPEN WIRE	0.5
K2.039	REPLACE LIFT PUMP MOTOR	2.0
K2.044	REPLACE HYDRAULIC CONTROL HANDLE SWITCH	0.5
K2.045	REPLACE HYDRAULIC SOLENOID COIL	0.5
K2.050	REPLACE CIRCUIT BREAKER	0.5
K2.057	REPLACE LOWERING SOLENOID COIL	0.5
K2.059	REPLACE HANDLE HEAD HARNESS	1.0

CONTINUED

ELECTRICAL CONTINUED

PROB. CODE	OPERATION DESCRIPTION	TIME
K2.063	REPLACE HANDLE HARNESS	1.5
K2.064	REPLACE LIFT SWITCH	0.5
K2.065	REPLACE LOWER SWITCH	0.5
K2.066	REPLACE REVERSER SWITCH	1.0
K2.073	REPLACE DRIVE MOTOR BRUSHES	1.0
K2.074	REPLACE PUMP MOTOR BRUSHES	1.0
K2.080	REPLACE COLD STORAGE THERMOSTAT	0.3
K2.081	REPLACE COLD STORAGE HEATER	1.0

HYDRAULIC

PROB. CODE	OPERATION DESCRIPTION	TIME
K3.001	REPLACE RESERVOIR	2.0
K3.002	REPLACE CONTROL VALVE	2.5
K3.004	REPLACE TWO STAGE LIFT CYLINDER	2.5
K3.005	RESEAL TWO STAGE LIFT CYLINDER	1.2
K3.006	REPLACE FREE LIFT CYINDER	2.5
K3.007	RESEAL FREE LIFT CYLINDER	1.2
K3.008	REPLACE STAGING CYLINDER	3.5
K3.009	RESEAL STAGING CYLINDER	1.2
K3.010	REPLACE HYDRAULIC FILTER	0.5
K3.011	REPLACE ANY HYDRAULIC HOSE	1.3
K3.012	REPLACE VELOCITY FUSE	1.0
K3.013	REPLACE LIFT PUMP	2.0
K3.014	REPLACE HYDRAULIC SOLENOID VLAVE	0.5
K3.015	REPLACE COMPENSATOR CYLINDER	1.5
K3.016	RESEAL COMPENSATOR CYLINDER	2.0
K3.017	REPLACE LIFT PUMP CHECK VALVE	0.5
K3.018	REPLACE HYDRAULIC SOLENOID VALVE	0.5
K3.021	REPLACE LIFT PUMP MOTOR ASSY	1.5
K3.022	REPLACE REACH CYLINDER	1.0
K3.023	RESEAL REACH CYLINDER	1.5
K3.024	REPLACE TILT CYLINDER	1.0
K3.025	RESEAL TILT CYLINDER	1.5
K3.026	REPLACE SIDE SHIFT CYLINDER	1.0
K3.027	RESEAL SIDE SHIFT CYLINDER	1.5

WR30

FRAME

PROB. CODE	OPERATION DESCRIPTION	TIME
K4.009	REPLACE TRANSMISSION PIVOT BEARING	1.5
K4.013	REPLACE LOAD WHEEL	0.5
K4.023	REPLACE STABILIZER CASTER	0.6
K4.024	REPLACE CASTER WHEEL	0.5
K4.025	REPLACE STABILIZER CASTER SPRING	0.7
K4.026	REPLACE PLATFORM CUSHION BUMPER	0.5

MAST

PROB. CODE	OPERATION DESCRIPTION	TIME
K5.001	SHIM CARRIAGE	2.0
K5.002	SHIM INNER COLUMN	3.0
K5.003	SHIM INTERMEDIATE COLUMN	3.0
K5.004	REPLACE CARRIAGE ROLLER	2.5
K5.005	REPLACE INNER COLUMN ROLLER	3.5
K5.006	REPLACE INTERMEDIATE COLUMN ROLLER	3.5

REACH

PROB. CODE	OPERATION DESCRIPTION	TIME
K5.008	REPLACE CENTER PIVOT BEARING	3.0
K5.009	REMOVE AND INSTALL REACH ASSY	2.0
K5.010	REPLACE FRONT FRAME	3.0
K5.011	REPLACE REAR FRAME	3.0
K5.012	REPLACE ARM ROLLER	2.0
K5.013	RECONDITION SINGLE REACH	4.5
K5.014	INSTALL SIDE SHIFT	3.0
K5.015	RECONDITION DEEP REACH	8.0

NR35B

TRANSMISSION

PROB. CODE	OPERATION DESCRIPTION	TIME
L1.001	REMOVE AND REPLACE	2.0
L1.002	REPLACE AXLE SEAL	3.0
L1.003	REPLACE DRIVE AXLE	3.0
L1.004	REBUILD/RECONDITION	8.0
L1.005	REPLACE STEER BEARING	2.2
L1.010	REPLACE DRIVE MOTOR BRAKE DISC	1.5
L1.011	ADJUST BRAKES	0.5
L1.012	REPLACE DRIVE TIRE	0.5
L1.016	REPLACE BRAKE PEDAL	2.0

ELECTRICAL

PROB. CODE	OPERATION DESCRIPTION	TIME
L2.001	REPLACE HORN	0.3
L2.002	REPLACE EMERGENCY DISCONNECT	0.8
L2.003	ADJUST BRAKE SWITCH	0.7
L2.004	REPLACE ACCESSORY WIRING HARNESS	1.0
L2.005	REPLACE KEY SWITCH	1.0
L2.006	REPLACE BRAKE SWITCH	0.7
L2.007	REPLACE LIFT POTENTIOMETER	1.0
L2.008	REPLACE REACH/TILT/SIDESHIFT POTENTIOMETER	1.0
L2.009	REPLACE HORN BUTTON	1.0
L2.010	REPLACE DIRECTION/SPEED POTENTIOMETER	1.0
L2.011	REPLACE BRAKE TRANSDUCER	0.1
L2.014	ADJUST BRAKE TRANSDUCER	0.7
L2.015	REPLACE DRIVE MOTOR	1.5
L2.018	REPLACE K11/K13 CONTACTOR	1.5
L2.020	REPLACE STEER TACHOMETER	1.5
L2.021	REPLACE MAIN CONTACTOR	1.0
L2.024	REPLACE DRIVE MOTOR FAN	0.7
L2.025	REPLACE LIFT PUMP BY PASS CONTACTOR	0.7
L2.027	REPLACE ELECTRONIC FAN	0.7
L2.028	REPLACE A5 MAIN LOGIC CARD	1.0
L2.029	REPLACE A1 DRIVE TRANSISTOR REGULATOR	1.0
L2.030	REPLACE A2 LIFT TRANSISTOR REGULATOR	1.0
L2.031	REPLACE A6 DASH DISPLAY	0.5
L2.032	REPLACE A7 PRESET HEIGHT CARD	1.0
L2.033	REPLACE A8 HEIGHT INDICATOR CARD	0.5
L2.034	REPLACE A22 PRESET HEIGHT KEY PAD	1.5

CONTINUED

NR35B

ELECTRICAL CONTINUED

PROB. CODE	OPERATION DESCRIPTION	TIME
L2.035	REPLACE MAST UPPER POSITION SWITCH	0.5
L2.036	REPLACE BATTERY CONNECTOR	0.6
L2.037	REPLACE ONE POWER CABLE	1.0
L2.038	REPAIR ONE OPEN WIRE	0.5
L2.039	REPLACE LIFT PUMP MOTOR	3.5
L2.042	REPLACE SPEED LIMIT SWITCH	0.7
L2.043	REPLACE MAST ELECTRICAL CABLE	2.0
L2.044	REPLACE CHASSIS WIRING HARNESS	3.5
L2.045	REPLACE HYDRAULIC SOLENOID COIL	0.5
L2.046	REPLACE REACH WIRING HARNESS	1.0
L2.047	REPLACE STEER MOTOR	0.7
L2.048	REPLACE STEER SENSOR	1.0
L2.049	ADJUST STEER SENSOR	0.5
L2.050	REPLACE A/B VALVE COIL	0.5
L2.051	REPLACE PULSE SENSOR	0.8
L2.052	REPLACE DRIVE MOTOR SPEED SENSOR	0.3
L2.053	REPLACE DRIVE MOTOR DIRECTION SENSOR	0.3
L2.054	REPLACE DRIVE MOTOR BRAKE COIL	1.0
L2.055	REPLACE RIGHT FOOT SWITCH	0.7
L2.070	REPLACE K11/K13 CONTACTOR TIPS	1.5
L2.071	REPLACE FAN/LIGHT SWITCH	1.0
L2.072	REPLACE LIFT BYPASS CONTACTOR TIPS	1.5
L2.073	REPLACE MAIN CONTACTOR TIPS	1.5
L2.074	REPLACE DRIVE MOTOR BRUSHES	1.5
L2.075	REPLACE PUMP MOTOR BRUSHES	1.5
L2.076	REPLACE STEER MOTOR BRUSHES	0.5

HYDRAULIC

PROB. CODE	OPERATION DESCRIPTION	TIME
L3.001	REPLACE RESERVOIR	2.0
L3.002	REPLACE LIFT VALVE	2.0
L3.003	RESEAL LIFT VALVE	1.0
L3.004	REPLACE TILT CYLINDER	0.5
L3.005	RESEAL TILT CLINDER	1.0
L3.006	REPLACE FREE LIFT CYINDER	2.5
L3.007	RESEAL FREE LIFT CYLINDER	1.2
L3.008	REPLACE STAGING CYLINDER	3.5
L3.009	RESEAL STAGING CYLINDER	1.2

CONTINUED

HYDRAULIC CONTINUED

PROB. CODE	OPERATION DESCRIPTION	TIME
L3.011	REPLACE ANY HYDRAULIC HOSE	1.3
L3.012	REPLACE VELOCITY FUSE	0.8
L3.013	REPLACE LIFT PUMP	3.5
L3.015	REPLACE LOWERING PROPORTIONAL VALVE	1.0
L3.016	RESEAL LOWERING PROPORTIONAL VALVE	0.5
L3.017	REPLACE A/B VALVE	0.8
L3.018	RESEAL A/B VALVE	0.8
L3.019	REPLACE HYDRAULIC SOLENOID VALVE	0.7
L3.020	REPLACE REACH CYLINDER	1.0
L3.021	RESEAL REACH CYLINDER	1.5
L3.022	REPLACE SIDE SHIFT CYLINDER	0.5
L3.023	RESEAL SIDE SHIFT CYLINDER	1.0

FRAME

PROB. CODE	OPERATION DESCRIPTION	TIME
L4.001	REPLACE CASTER PIVOT	2.0
L4.002	ADJUST ARTICULATING STOPS	0.5
L4.003	REPLACE CASTER BRACKET	2.0
L4.004	REPLACE CASTER WHEEL	0.5
L4.013	REPLACE TWO LOAD WHEELS	0.5

MAST

PROB. CODE	OPERATION DESCRIPTION	TIME
L5.001	SHIM CARRIAGE	2.5
L5.002	SHIM INNER COLUMN	4.0
L5.003	SHIM INTERMEDIATE COLUMN	4.5
L5.004	REPLACE CARRIAGE ROLLER	2.5
L5.005	REPLACE INNER COLUMN ROLLER	4.0
L5.006	REPLACE INTERMEDIATE COLUMN ROLLER	4.5
L5.007	INSTALL MAST	1.0
L5.017	REPLACE HEIGHT INDICATOR CABLE	0.5

NR35B

REACH

PROB. CODE	OPERATION DESCRIPTION	TIME
L5.008	REPLACE CENTER PIVOT BEARING	3.0
L5.009	REMOVE AND INSTALL REACH ASSEMBLY	1.5
L5.010	REPLACE FRONT FRAME	3.0
L5.011	REPLACE REAR FRAME	3.0
L5.012	REPLACE ARM ROLLER	2.0
L5.013	RECONDITION SINGLE REACH	4.5
L5.014	INSTALL SIDE SHIFT	3.0

NR45B

TRANSMISSION

PROB. CODE	OPERATION DESCRIPTION	TIME
M1.001	REMOVE AND REPLACE	2.0
M1.002	REPLACE AXLE SEAL	3.0
M1.003	REPLACE DRIVE AXLE	3.0
M1.004	REBUILD/RECONDITION	8.0
M1.005	REPLACE STEER BEARING	2.2
M1.010	REPLACE DRIVE MOTOR BRAKE DISC	1.5
M1.011	ADJUST BRAKES	0.5
M1.012	REPLACE DRIVE TIRE	0.5
M1.013	REPLACE CASTER BRAKE SHOES	2.0
M1.014	ADJUST CASTER BRAKE	0.5
M1.016	REPLACE BRAKE PEDAL	2.0

ELECTRICAL

PROB. CODE	OPERATION DESCRIPTION	TIME
M2.001	REPLACE HORN	0.3
M2.002	REPLACE EMERGENCY DISCONNECT	0.8
M2.003	ADJUST BRAKE SWITCH	0.7
M2.004	REPLACE ACCESSORY WIRING HARNESS	1.0
M2.005	REPLACE KEY SWITCH	1.0
M2.006	REPLACE BRAKE SWITCH	0.7
M2.007	REPLACE LIFT POTENTIOMETER	1.0
M2.008	REPLACE REACH/TILT/SIDESHIFT POTENTIOMETER	1.0
M2.009	REPLACE HORN BUTTON	1.0
M2.010	REPLACE DIRECTION/SPEED POTENTIOMETER	1.0
M2.011	REPLACE BRAKE TRANSDUCER	0.7
M2.014	ADJUST BRAKE TRANSDUCER	0.7
M2.015	REPLACE DRIVE MOTOR	1.5
M2.018	REPLACE K11/K13 CONTACTOR	1.5
M2.020	REPLACE STEER TACHOMETER	1.5
M2.021	REPLACE MAIN CONTACTOR	1.0
M2.024	REPLACE DRIVE MOTOR FAN	0.7
M2.025	REPLACE LIFT PUMP BY PASS CONTACTOR	1.0
M2.027	REPLACE ELECTRONIC FAN	1.0
M2.028	REPLACE A5 MAIN LOGIC CARD	1.0
M2.029	REPLACE A1 DRIVE TRANSISTOR REGULATOR	1.0
M2.030	REPLACE A2 LIFT TRANSISTOR REGULATOR	1.0
M2.031	REPLACE A6 DASH DISPLAY	0.5
M2.032	REPLACE A7 PRESET HEIGHT CARD	1.0

CONTINUED

ELECTRICAL CONTINUED

PROB. CODE	OPERATION DESCRIPTION	TIME
M2.033	REPLACE A8 HEIGHT INDICATOR CARD	0.5
M2.034	REPLACE A22 PRESET HEIGHT KEY PAD	1.5
M2.035	REPLACE MAST UPPER POSITION SWITCH	0.7
M2.036	REPLACE BATTERY CONNECTOR	0.6
M2.037	REPLACE ONE POWER CABLE	1.0
M2.038	REPAIR ONE OPEN WIRE	0.5
M2.039	REPLACE LIFT PUMP MOTOR	3.5
M2.042	REPLACE SPEED LIMIT SWITCH	0.5
M2.043	REPLACE MAST ELECTRICAL CABLE	2.0
M2.044	REPLACE CHASSIS WIRING HARNESS	3.5
M2.045	REPLACE HYDRAULIC SOLENOID COIL	0.5
M2.046	REPLACE REACH WIRING HARNESS	1.0
M2.047	REPLACE STEER MOTOR	0.7
M2.048	REPLACE STEER SENSOR	1.0
M2.049	ADJUST STEER SENSOR	0.5
M2.050	REPLACE A/B VALVE COIL	0.5
M2.051	REPLACE PULSE SENSOR	0.8
M2.052	REPLACE DRIVE MOTOR SPEED SENSOR	0.3
M2.053	REPLACE DRIVE MOTOR DIRECTION SENSOR	0.3
M2.054	REPLACE DRIVE MOTOR BRAKE COIL	1.0
M2.055	REPLACE RIGHT FOOT SWITCH	0.7
M2.070	REPLACE K11/K13 CONTACTOR TIPS	1.5
M2.071	REPLACE FAN/LIGHT SWITCH	1.0
M2.072	REPLACE LIFT BYPASS CONTACTOR TIPS	1.5
M2.073	REPLACE MAIN CONTACTOR TIPS	1.5
M2.074	REPLACE DRIVE MOTOR BRUSHES	1.5
M2.075	REPLACE PUMP MOTOR BRUSHES	2.0
M2.076	REPLACE STEER MOTOR BRUSHES	0.5

HYDRAULIC

PROB. CODE	OPERATION DESCRIPTION	TIME
M3.001	REPLACE RESERVOIR	2.0
M3.002	REPLACE LIFT VALVE	2.0
M3.003	RESEAL LIFT VALVE	1.0
M3.004	REPLACE TILT CYLINDER	0.5
M3.005	RESEAL TILT CLINDER	1.0
M3.006	REPLACE FREE LIFT CYINDER	2.5
M3.007	RESEAL FREE LIFT CYLINDER	1.2

CONTINUED

HYDRAULIC CONTINUED

PROB. CODE	OPERATION DESCRIPTION	TIME
M3.008	REPLACE STAGING CYLINDER	3.5
M3.009	RESEAL STAGING CYLINDER	1.2
M3.011	REPLACE ANY HYDRAULIC HOSE	1.3
M3.012	REPLACE VELOCITY FUSE	0.8
M3.013	REPLACE LIFT PUMP	3.5
M3.015	REPLACE LOWERING PROPORTIONAL VALVE	1.0
M3.016	RESEAL LOWERING PROPORTIONAL VALVE	0.5
M3.017	REPLACE A/B VALVE	0.8
M3.018	RESEAL A/B VALVE	0.8
M3.019	REPLACE HYDRAULIC SOLENOID VALVE	0.7
M3.020	REPLACE REACH CYLINDER	1.0
M3.021	RESEAL REACH CYLINDER	1.5
M3.022	REPLACE SIDE SHIFT CYLINDER	0.5
M3.023	RESEAL SIDE SHIFT CYLINDER	1.0

FRAME

PROB. CODE	OPERATION DESCRIPTION	TIME
M4.001	REPLACE CASTER PIVOT	2.0
M4.002	ADJUST ARTICULATING STOPS	0.8
M4.003	REPLACE CASTER BRACKET	2.0
M4.004	REPLACE CASTER WHEEL	0.5
M4.013	REPLACE TWO LOAD WHEELS	0.5

NR45B

MAST

PROB. CODE	OPERATION DESCRIPTION	TIME
M5.001	SHIM CARRIAGE	2.5
M5.002	SHIM INNER COLUMN	4.0
M5.003	SHIM INTERMEDIATE COLUMN	4.5
M5.004	REPLACE CARRIAGE ROLLER	2.5
M5.005	REPLACE INNER COLUMN ROLLER	4.0
M5.006	REPLACE INTERMEDIATE COLUMN ROLLER	4.5
M5.007	INSTALL MAST	1.0
M5.017	REPLACE HEIGHT INDICATOR CABLE	0.5

REACH

PROB. CODE	OPERATION DESCRIPTION	TIME
M5.008	REPLACE CENTER PIVOT BEARING	3.0
M5.009	REMOVE AND INSTALL REACH ASSEMBLY	1.5
M5.010	REPLACE FRONT FRAME	3.0
M5.011	REPLACE REAR FRAME	3.0
M5.012	REPLACE ARM ROLLER	2.0
M5.013	RECONDITION SINGLE REACH	6.0
M5.014	INSTALL SIDE SHIFT	3.0

ND30B

TRANSMISSION

PROB. CODE	OPERATION DESCRIPTION	TIME
N1.001	REMOVE AND REPLACE	2.0
N1.002	REPLACE AXLE SEAL	3.0
N1.003	REPLACE DRIVE AXLE	3.0
N1.004	REBUILD/RECONDITION	8.0
N1.005	REPLACE STEER BEARING	2.2
N1.010	REPLACE DRIVE MOTOR BRAKE DISC	1.5
N1.011	ADJUST BRAKES	0.5
N1.012	REPLACE DRIVE TIRE	0.5
N1.013	REPLACE CASTER BRAKE SHOES	2.0
N1.014	ADJUST CASTER BRAKE	0.5
N1.016	REPLACE BRAKE PEDAL	2.0

ELECTRICAL

PROB. CODE	OPERATION DESCRIPTION	TIME
N2.001	REPLACE HORN	0.3
N2.002	REPLACE EMERGENCY DISCONNECT	0.8
N2.003	ADJUST BRAKE SWITCH	0.7
N2.004	REPLACE ACCESSORY WIRING HARNESS	1.0
N2.005	REPLACE KEY SWITCH	1.0
N2.006	REPLACE BRAKE SWITCH	0.7
N2.007	REPLACE LIFT POTENTIOMETER	1.0
N2.008	REPLACE REACH/TILT/SIDESHIFT POTENTIOMETER	1.0
N2.009	REPLACE HORN BUTTON	1.0
N2.010	REPLACE DIRECTION/SPEED POTENTIOMETER	1.0
N2.011	REPLACE BRAKE TRANSDUCER	0.7
N2.014	ADJUST BRAKE TRANSDUCER	0.7
N2.015	REPLACE DRIVE MOTOR	1.5
N2.018	REPLACE K11/K13 CONTACTOR	1.5
N2.020	REPLACE STEER TACHOMETER	1.5
N2.021	REPLACE MAIN CONTACTOR	1.0
N2.024	REPLACE DRIVE MOTOR FAN	0.7
N2.025	REPLACE LIFT PUMP BY PASS CONTACTOR	1.0
N2.027	REPLACE ELECTRONIC FAN	1.0
N2.028	REPLACE A5 MAIN LOGIC CARD	1.0
N2.029	REPLACE A1 DRIVE TRANSISTOR REGULATOR	1.0
N2.030	REPLACE A2 LIFT TRANSISTOR REGULATOR	1.0
N2.031	REPLACE A6 DASH DISPLAY	0.5
N2.032	REPLACE A7 PRESET HEIGHT CARD	1.0

CONTINUED

ND30B

ELECTRICAL CONTINUED

PROB. CODE	OPERATION DESCRIPTION	TIME
N2.033	REPLACE A8 HEIGHT INDICATOR CARD	0.5
N2.034	REPLACE A22 PRESET HEIGHT KEY PAD	1.5
N2.035	REPLACE MAST UPPER POSITION SWITCH	0.7
N2.036	REPLACE BATTERY CONNECTOR	0.6
N2.037	REPLACE ONE POWER CABLE	1.0
N2.038	REPAIR OPEN WIRE	0.5
N2.039	REPLACE LIFT PUMP MOTOR	3.5
N2.042	REPLACE SPEED LIMIT SWITCH	0.7
N2.043	REPLACE MAST ELECTRICAL CABLE	2.0
N2.044	REPLACE CHASSIS WIRING HARNESS	3.5
N2.045	REPLACE HYDRAULIC SOLENOID COIL	0.5
N2.046	REPLACE REACH WIRING HARNESS	1.0
N2.047	REPLACE STEER MOTOR	0.7
N2.048	REPLACE STEER SENSOR	1.0
N2.049	ADJUST STEER SENSOR	0.5
N2.050	REPLACE A/B VALVE COIL	0.5
N2.051	REPLACE PULSE SENSOR	0.8
N2.052	REPLACE DRIVE MOTOR SPEED SENSOR	0.3
N2.053	REPLACE DRIVE MOTOR DIRECTION SENSOR	0.3
N2.054	REPLACE DRIVE MOTOR BRAKE COIL	1.0
N2.055	REPLACE RIGHT FOOT SWITCH	0.7
N2.070	REPLACE K11/K13 CONTACTOR TIPS	1.5
N2.071	REPLACE FAN/LIGHT SWITCH	1.0
N2.072	REPLACE LIFT BYPASS CONTACTOR TIPS	1.5
N2.073	REPLACE MAIN CONTACTOR TIPS	1.5
N2.074	REPLACE DRIVE MOTOR BRUSHES	1.5
N2.075	REPLACE PUMP MOTOR BRUSHES	1.5
N2.076	REPLACE STEER MOTOR BRUSHES	0.5

HYDRAULIC

PROB. CODE	OPERATION DESCRIPTION	TIME
N3.001	REPLACE RESERVOIR	2.0
N3.002	REPLACE LIFT VALVE	2.0
N3.003	RESEAL LIFT VALVE	1.0
N3.004	REPLACE TILT CYLINDER	0.5
N3.005	RESEAL TILT CYLINDER	1.0
N3.006	REPLACE FREE LIFT CYLINDER	2.5
N3.007	RESEAL FREE LIFT CYLINDER	1.2

CONTINUED

HYDRAULIC CONTINUED

PROB. CODE	OPERATION DESCRIPTION	TIME
N3.008	REPLACE STAGING CYLINDER	3.5
N3.009	RESEAL STAGING CYLINDER	1.2
N3.011	REPLACE ANY HYDRAULIC HOSE	1.3
N3.012	REPLACE VELOCITY FUSE	0.8
N3.013	REPLACE LIFT PUMP	3.5
N3.015	REPLACE LOWERING PROPORTIONAL VALVE	1.0
N3.016	RESEAL LOWERING PROPORTIONAL VALVE	1.5
N3.017	REPLACE A/B VALVE	0.8
N3.018	RESEAL A/B VALVE	0.8
N3.019	REPLACE HYDRAULIC SOLENOID VALVE (EACH)	0.7
N3.020	REPLACE REACH CYLINDER	1.0
N3.021	RESEAL REACH CYLINDER	1.5
N3.022	REPLACE SIDE SHIFT CYLINDER	0.5
N3.023	RESEAL SIDE SHIFT CYLINDER	1.0

FRAME

PROB. CODE	OPERATION DESCRIPTION	TIME
N4.001	REPLACE CASTER PIVOT	2.0
N4.002	ADJUST ARTICULATING STOPS	0.8
N4.003	REPLACE CASTER BRACKET	2.0
N4.004	REPLACE CASTER WHEEL	0.5
N4.013	REPLACE TWO LOAD WHEELS	0.5

MAST

PROB. CODE	OPERATION DESCRIPTION	TIME
N5.001	SHIM CARRIAGE	2.5
N5.002	SHIM INNER COLUMN	4.0
N5.003	SHIM INTERMEDIATE COLUMN	4.5
N5.004	REPLACE CARRIAGE ROLLER	2.5
N5.005	REPLACE INNER COLUMN ROLLER	4.0
N5.006	REPLACE INTERMEDIATE COLUMN ROLLER	4.5
N5.007	INSTALL MAST	1.0
N5.017	REPLACE HEIGHT INDICATOR CABLE	0.5

ND30B

REACH

PROB.		
CODE	**OPERATION DESCRIPTION**	**TIME**
N5.009	REMOVE AND INSTALL REACH ASSEMBLY	1.5
N5.010	REPLACE FRONT FRAME	3.0
N5.011	REPLACE REAR FRAME	3.0
N5.012	REPLACE ARM ROLLER	2.0
N5.014	INSTALL SIDE SHIFT	3.0
N5.015	RECONDITION DEEP REACH	8.0
N5.016	REPLACE REAR ARM CENTER BEARING	3.0
N5.017	REPLACE FRONT ARM CENTER BEARING	3.0

NS40B

TRANSMISSION

PROB. CODE	OPERATION DESCRIPTION	TIME
P1.001	REMOVE AND REPLACE	2.0
P1.002	REPLACE AXLE SEAL	3.0
P1.003	REPLACE DRIVE AXLE	3.0
P1.004	REBUILD/RECONDITION	8.0
P1.005	REPLACE STEER BEARING	2.2
P1.010	REPLACE DRIVE MOTOR BRAKE DISC	1.5
P1.011	ADJUST BRAKES	0.5
P1.012	REPLACE DRIVE TIRE	0.5
P1.016	REPLACE BRAKE PEDAL	2.0

ELECTRICAL

PROB. CODE	OPERATION DESCRIPTION	TIME
P2.001	REPLACE HORN	0.3
P2.002	REPLACE EMERGENCY DISCONNECT	0.8
P2.003	ADJUST BRAKE SWITCH	0.7
P2.004	REPLACE ACCESSORY WIRING HARNESS	1.0
P2.005	REPLACE KEY SWITCH	1.0
P2.006	REPLACE BRAKE SWITCH	0.7
P2.007	REPLACE LIFT POTENTIOMETER	1.0
P2.008	REPLACE REACH/TILT/SIDESHIFT POTENTIOMETER	1.0
P2.009	REPLACE HORN BUTTON	1.0
P2.010	REPLACE DIRECTION/SPEED POTENTIOMETER	1.0
P2.011	REPLACE BRAKE TRANSDUCER	0.7
P2.014	ADJUST BRAKE TRANSDUCER	0.7
P2.015	REPLACE DRIVE MOTOR	1.5
P2.018	REPLACE K11/K13 CONTACTOR	1.5
P2.020	REPLACE STEER TACHOMETER	1.5
P2.021	REPLACE MAIN CONTACTOR	1.0
P2.024	REPLACE DRIVE MOTOR FAN	0.7
P2.025	REPLACE LIFT PUMP BY PASS CONTACTOR	1.0
P2.027	REPLACE ELECTRONIC FAN	1.0
P2.028	REPLACE A5 MAIN LOGIC CARD	1.0
P2.029	REPLACE A1 DRIVE TRANSISTOR REGULATOR	1.0
P2.030	REPLACE A2 LIFT TRANSISTOR REGULATOR	1.0
P2.031	REPLACE A6 DASH DISPLAY	0.5
P2.032	REPLACE A7 PRESET HEIGHT CARD	1.0
P2.033	REPLACE A8 HEIGHT INDICATOR CARD	0.5
P2.034	REPLACE A22 PRESET HEIGHT KEY PAD	1.5

CONTINUED

NS40B

ELECTRICAL CONTINUED		
PROB. CODE	OPERATION DESCRIPTION	TIME
P2.035	REPLACE MAST UPPER POSITION SWITCH	0.7
P2.036	REPLACE BATTERY CONNECTOR	0.6
P2.037	REPLACE ONE POWER CABLE	1.0
P2.038	REPAIR ONE OPEN WIRE	0.5
P2.039	REPLACE LIFT PUMP MOTOR	3.5
P2.042	REPLACE SPEED LIMIT SWITCH	0.5
P2.043	REPLACE MAST ELECTRICAL CABLE	2.0
P2.044	REPLACE CHASSIS WIRING HARNESS	3.5
P2.045	REPLACE HYDRAULIC SOLENOID COIL	0.5
P2.046	REPLACE REACH WIRING HARNESS	1.0
P2.047	REPLACE STEER MOTOR	0.7
P2.048	REPLACE STEER SENSOR	1.0
P2.049	ADJUST STEER SENSOR	0.5
P2.050	REPLACE A/B VALVE COIL	0.5
P2.051	REPLACE PULSE SENSOR	1.0
P2.052	REPLACE DRIVE MOTOR SPEED SENSOR	0.3
P2.053	REPLACE DRIVE MOTOR DIRECTION SENSOR	0.3
P2.054	REPLACE DRIVE MOTOR BRAKE COIL	1.0
P2.055	REPLACE RIGHT FOOT SWITCH	0.7
P2.070	REPLACE K11/K13 CONTACTOR TIPS	1.5
P2.071	REPLACE FAN/LIGHT SWITCH	1.0
P2.072	REPLACE LIFT BYPASS CONTACTOR TIPS	1.5
P2.073	REPLACE MAIN CONTACTOR TIPS	1.5
P2.074	REPLACE DRIVE MOTOR BRUSHES	1.5
P2.075	REPLACE PUMP MOTOR BRUSHES	1.5
P2.076	REPLACE STEER MOTOR BRUSHES	0.5

HYDRAULIC

PROB. CODE	OPERATION DESCRIPTION	TIME
P3.001	REPLACE RESERVOIR	2.0
P3.002	REPLACE LIFT VALVE	2.0
P3.003	RESEAL LIFT VALVE	1.0
P3.004	REPLACE TILT CYLINDER	0.5
P3.005	RESEAL TILT CLINDER	1.0
P3.006	REPLACE FREE LIFT CYINDER	2.5
P3.007	RESEAL FREE LIFT CYLINDER	1.2
P3.008	REPLACE STAGING CYLINDER	3.5
P3.009	RESEAL STAGING CYLINDER	1.2

CONTINUED

HYDRAULIC CONTINUED

PROB. CODE	OPERATION DESCRIPTION	TIME
P3.011	REPLACE ANY HYDRAULIC HOSE	1.3
P3.012	REPLACE VELOCITY FUSE	0.8
P3.013	REPLACE LIFT PUMP	3.5
P3.015	REPLACE LOWERING PROPORTIONAL VALVE	1.0
P3.016	RESEAL LOWERING PROPORTIONAL VALVE	1.5
P3.017	REPLACE A/B VALVE	0.8
P3.018	RESEAL A/B VALVE	0.8
P3.019	REPLACE HYDRAULIC SOLENOID VALVE	0.7
P3.020	REPLACE REACH CYLINDER	1.0
P3.021	RESEAL REACH CYLINDER	1.5
P3.022	REPLACE SIDE SHIFT CYLINDER	0.5
P3.023	RESEAL SIDE SHIFT CYLINDER	1.0

FRAME

PROB. CODE	OPERATION DESCRIPTION	TIME
P4.001	REPLACE CASTER PIVOT	2.0
P4.002	ADJUST ARTICULATING STOPS	0.8
P4.003	REPLACE CASTER BRACKET	2.0
P4.004	REPLACE CASTER WHEEL	0.5
P4.013	REPLACE TWO LOAD WHEELS	0.5

MAST

PROB. CODE	OPERATION DESCRIPTION	TIME
P5.001	SHIM CARRIAGE	2.5
P5.002	SHIM INNER COLUMN	4.0
P5.003	SHIM INTERMEDIATE COLUMN	4.5
P5.004	REPLACE CARRIAGE ROLLER	2.5
P5.005	REPLACE INNER COLUMN ROLLER	4.0
P5.006	REPLACE INTERMEDIATE COLUMN ROLLER	4.5
P5.007	INSTALL MAST	1.0
P5.017	REPLACE HEIGHT INDICATOR CABLE	0.5

NS50B

TRANSMISSION

PROB. CODE	OPERATION DESCRIPTION	TIME
Q1.001	REMOVE AND REPLACE	2.0
Q1.002	REPLACE AXLE SEAL	3.0
Q1.003	REPLACE DRIVE AXLE	3.0
Q1.004	REBUILD/RECONDITION	8.0
Q1.005	REPLACE STEER BEARING	2.2
Q1.010	REPLACE DRIVE MOTOR BRAKE DISC	1.5
Q1.011	ADJUST BRAKES	0.5
Q1.012	REPLACE DRIVE TIRE	0.5
Q1.013	REPLACE CASTER BRAKE	2.0
Q1.014	ADJUST CASTER BRAKE	0.5
Q1.016	REPLACE BRAKE PEDAL	2.0

ELECTRICAL

PROB. CODE	OPERATION DESCRIPTION	TIME
Q2.001	REPLACE HORN	0.3
Q2.002	REPLACE EMERGENCY DISCONNECT	0.8
Q2.003	ADJUST BRAKE SWITCH	0.7
Q2.004	REPLACE ACCESSORY WIRING HARNESS	1.0
Q2.005	REPLACE KEY SWITCH	1.0
Q2.006	REPLACE BRAKE SWITCH	0.7
Q2.007	REPLACE LIFT POTENTIOMETER	1.0
Q2.008	REPLACE REACH/TILT/SIDESHIFT POTENTIOMETER	1.0
Q2.009	REPLACE HORN BUTTON	1.0
Q2.010	REPLACE DIRECTION/SPEED POTENTIOMETER	1.0
Q2.011	REPLACE BRAKE TRANSDUCER	0.7
Q2.014	ADJUST BRAKE TRANSDUCER	0.7
Q2.015	REPLACE DRIVE MOTOR	1.5
Q2.018	REPLACE K11/K13 CONTACTOR	1.5
Q2.020	REPLACE STEER TACHOMETER	1.5
Q2.021	REPLACE MAIN CONTACTOR	1.0
Q2.024	REPLACE DRIVE MOTOR FAN	0.7
Q2.025	REPLACE LIFT PUMP BY PASS CONTACTOR	1.0
Q2.027	REPLACE ELECTRONIC FAN	1.0
Q2.028	REPLACE A5 MAIN LOGIC CARD	1.0
Q2.029	REPLACE A1 DRIVE TRANSISTOR REGULATOR	1.0
Q2.030	REPLACE A2 LIFT TRANSISTOR REGULATOR	1.0
Q2.031	REPLACE A6 DASH DISPLAY	0.5
Q2.032	REPLACE A7 PRESET HEIGHT CARD	1.0

CONTINUED

ELECTRICAL CONTINUED

PROB. CODE	OPERATION DESCRIPTION	TIME
Q2.033	REPLACE A8 HEIGHT INDICATOR CARD	0.5
Q2.034	REPLACE A22 PRESET HEIGHT KEY PAD	1.5
Q2.035	REPLACE MAST UPPER POSITION SWITCH	0.7
Q2.036	REPLACE BATTERY CONNECTOR	0.6
Q2.037	REPLACE ONE POWER CABLE	1.0
Q2.038	REPAIR ONE OPEN WIRE	0.5
Q2.039	REPLACE LIFT PUMP MOTOR	3.5
Q2.042	REPLACE SPEED LIMIT SWITCH	0.5
Q2.043	REPLACE MAST ELECTRICAL CABLE	2.0
Q2.044	REPLACE CHASSIS WIRING HARNESS	3.5
Q2.045	REPLACE HYDRAULIC SOLENOID COIL	0.5
Q2.046	REPLACE REACH WIRING HARNESS	1.0
Q2.047	REPLACE STEER MOTOR	0.7
Q2.048	REPLACE STEER SENSOR	1.0
Q2.049	ADJUST STEER SENSOR	0.5
Q2.050	REPLACE A/B VALVE COIL	0.5
Q2.051	REPLACE PULSE SENSOR	0.8
Q2.052	REPLACE DRIVE MOTOR SPEED SENSOR	0.3
Q2.053	REPLACE DRIVE MOTOR DIRECTION SENSOR	0.3
Q2.054	REPLACE DRIVE MOTOR BRAKE COIL	1.0
Q2.055	REPLACE RIGHT FOOT SWITCH	0.7
Q2.070	REPLACE K11/K13 CONTACTOR TIPS	1.5
Q2.071	REPLACE FAN/LIGHT SWITCH	1.0
Q2.072	REPLACE LIFT BYPASS CONTACTOR TIPS	1.5
Q2.073	REPLACE MAIN CONTACTOR TIPS	1.5
Q2.074	REPLACE DRIVE MOTOR BRUSHES	1.5
Q2.075	REPLACE PUMP MOTOR BRUSHES	1.5
Q2.076	REPLACE STEER MOTOR BRUSHES	0.5

HYDRAULIC

PROB. CODE	OPERATION DESCRIPTION	TIME
Q3.001	REPLACE RESERVOIR	2.0
Q3.002	REPLACE LIFT VALVE	2.0
Q3.003	RESEAL LIFT VALVE	1.0
Q3.004	REPLACE TILT CYLINDER	0.5
Q3.005	RESEAL TILT CYLINDER	1.0
Q3.006	REPLACE FREE LIFT CYLINDER	2.5
Q3.007	RESEAL FREE LIFT CYLINDER	1.2

CONTINUED

NS50B

HYDRAULIC CONTINUED

PROB. CODE	OPERATION DESCRIPTION	TIME
Q3.008	REPLACE STAGING CYLINDER	3.5
Q3.009	RESEAL STAGING CYLINDER	1.2
Q3.011	REPLACE ANY HYDRAULIC HOSE	1.3
Q3.012	REPLACE VELOCITY FUSE	0.8
Q3.013	REPLACE LIFT PUMP	3.5
Q3.015	REPLACE LOWERING PROPORTIONAL VALVE	1.0
Q3.016	RESEAL LOWERING PROPORTIONAL VALVE	0.5
Q3.017	REPLACE A/B VALVE	0.8
Q3.018	RESEAL A/B VALVE	0.8
Q3.019	REPLACE HYDRAULIC SOLENOID VALVE	0.7
Q3.020	REPLACE REACH CYLINDER	1.0
Q3.021	RESEAL REACH CYLINDER	1.5
Q3.022	REPLACE SIDE SHIFT CYLINDER	0.5
Q3.023	RESEAL SIDE SHIFT CYLINDER	1.0

FRAME

PROB. CODE	OPERATION DESCRIPTION	TIME
Q4.001	REPLACE CASTER PIVOT	2.0
Q4.002	ADJUST ARTICULATING STOPS	0.8
Q4.003	REPLACE CASTER BRACKET	2.0
Q4.004	REPLACE CASTER WHEEL	0.5
Q4.013	REPLACE TWO LOAD WHEELS	0.5

MAST

PROB. CODE	OPERATION DESCRIPTION	TIME
Q5.001	SHIM CARRIAGE	2.5
Q5.002	SHIM INNER COLUMN	4.0
Q5.003	SHIM INTERMEDIATE COLUMN	4.5
Q5.004	REPLACE CARRIAGE ROLLER	2.5
Q5.005	REPLACE INNER COLUMN ROLLER	4.0
Q5.006	REPLACE INTERMEDIATE COLUMN ROLLER	4.5
Q5.007	INSTALL MAST	1.0
Q5.017	REPLACE HEIGHT INDICATOR CABLE	0.5

ACNR30/40 ACNM30/35 NM30/35B

BATTERY AND CONNECTIONS

PROB.		ACNR	ACNM/ NM
CODE	OPERATION DESCRIPTION	TIME	TIME
100	BATTERY, REMOVE CLEAN, TEST AND INSTALL	1.0	1.0
100	BATTERY, CLEAN, TEST-VOLTAGE & SPECIFIC GRAVITY	0.5	0.5
100	CABLE, BATTERY REPAIR, REMOVE AND INSTALL	0.7	0.7
100	CONNECTORS, BATTERY, REPAIR OR REMOVE AND INSTALL	1.0	1.0
100	BATTERY REMOVE AND INSTALL	0.5	0.5

BRAKE SYSTEM

PROB.		ACNR	ACNM/ NM
CODE	OPERATION DESCRIPTION	TIME	TIME
105	BRAKE DISC, REMOVE AND INSTALL	1.0	1.0
105	BRAKE PAD, REMOVE AND INSTALL	0.4	0.4
105	BRAKE CALIPER, REPLACE UPPER	0.5	0.5
105	BRAKE CALIPER, REPLACE LOWER	1.0	1.0
105	BRAKE CAM BOLT, REPLACE	0.1	0.1
105	BRAKE CAM, REPLACE	0.2	0.2
105	BRAKE PEDAL SPRING, REPLACE	0.2	0.2
105	BRAKE LINKAGE, REMOVE AND INSTALL	1.0	1.0

DRIVE AXLE

PROB.		ACNR	ACNM/ NM
CODE	OPERATION DESCRIPTION	TIME	TIME
110	DRIVE UNIT AY, REMOVE AND INSTALL	3.0	3.0
110	UPPER LINK, AND/OR UNDER LINK, REPLACE	NA	0.3
110	UPPER LINK BUSHING, REPLACE	NA	0.2
110	UPPER SPRING AND/OR LINK PIN, REPLACE	NA	0.4
110	UNDER SPRING AND/OR LINK PIN, REPLACE	NA	0.4
110	UPPER AND/OR UNDER SPRING BOLT, REPLACE	0.2	0.2
110	GEAR CASE ASSEMBLY, REMOVE AND REPLACE ANY GEAR OR SHAFT AND REPLACE	1.2	1.2
110	LOWER GEAR CASE, R&R RING AND PINION GEAR	2.5	2.5
110	DRIVE WHEEL, DRIVE SHAFT OR OIL SEAL, REPLACE	0.2	0.2
110	DRIVE WHEEL BEAING, REPLACE	0.4	0.4
110	CASTER WHEEL ARM, REPLACE	NA	0.7
110	CASTER WHEEL ARM BUSHING AND/OR PIN, REPLACE	NA	0.3
110	SWING AXLE, REPLACW	NA	0.8
110	SWING AXLE PIN AND BUSHING, REPLACE	NA	0.9
110	CASTER WHEEL BEARING, REPLACE	0.3	0.7
110	CASTER, REPLACE	0.7	NA
110	CASTER, REPAIR OR REPLACE ANY ONE ITEM	1.0	NA

ACNR30/40 ACNM30/35 NM30/35B

ELECTRICAL SYSTEM (INCLUDING INSTRUMENT PANEL)

PROB.		ACNR	ACNM/ NM
CODE	OPERATION DESCRIPTION	TIME	TIME
115	BRAKE SWITCH, REPLACE	0.3	0.3
115	WIRING HARNESS, REMOVE AND REPLACE ALL	5.0	5.0
115	WIRING HARNESS, REMOVE AND REPLACE ONE	2.0	2.0
115	HORN, REPLACE	0.3	0.3
115	HORN BUTTON AND CABLE, REPLACE	0.5	0.5
115	REMOTE LIFT SWITCH, REPLACE	0.3	0.3
115	POWER CYLINDER, REPLACE	0.7	0.7
115	INSTRUMENT PANEL, REPLACE	1.3	1.3
115	KEY SWITCH	0.3	0.3
115	LCD DISPLAY	0.8	0.8
115	FUSE HOLDER	0.2	0.2
115	HORN SWITCH, REPLACE	0.3	0.3
115	FUSE, REPLACE	0.2	0.2
115	ROTARY SWITCH, REPLACE	0.3	0.3

FRAME

PROB.		ACNR	ACNM/ NM
CODE	OPERATION DESCRIPTION	TIME	TIME
120	BATTERY CARRIER ROLLER, REPLACE ONE	0.3	0.3
120	COVERS, REOMVE AND REPAIR AND REPLACE	0.5	0.5
120	OVERHEAD GUARD, REPLACE	0.5	0.5

HYDRAULIC SYSTEM

PROB.		ACNR	ACNM/ NM
CODE	OPERATION DESCRIPTION	TIME	TIME
125	HYDRAULIC TANK, REPLACE	1.8	1.8
125	HYDRAULIC TANK CLEAN	1.0	1.0
125	HYDRAULIC HOSE, TUBE OR LINE, REPLACE ONE	0.5	0.5
125	HYDRAULIC PUMP REPLACE & SET PRESSURE	3.0	3.0
125	HYDRAULIC PUMP R&R AND REBUILD	4.5	4.5
125	CONTROL VALVE, REPLACE	0.8	0.8
125	CONTROL VALVE R&R AND CLEAN	2.8	2.8
125	SEAL, CONTROL VALVE PLUNGER	1.0	1.0
125	FITTING, REPLACE (OIL LEAK)	0.5	0.5
125	FILTER, REPLACE AND FLUSH TANK	1.3	1.3
125	FILTER, REPLACE	0.8	0.8
125	HYDRAULIC, BOARD REPLACE	0.7	0.7
125	SOLENOID VALVE, REPLACE	0.3	0.3
125	HYDRAULIC LINKAGE, REPLACE	0.5	0.5

ACNR30/40 ACNM30/35 NM30/35B

LIFT CYLINDER

PROB.		ACNR	ACNM/ NM
CODE	OPERATION DESCRIPTION	TIME	TIME
135	PRIMARY CYL. REPACK INCLUDES R&R	1.5	1.5
135	PRIMARY CYL. REMOVE AND CLEAN	2.5	2.5
135	PRIMARY CYL. ASSMBLE AND INSTALL	1.0	1.0
135	R&R FITTING	1.0	1.0
135	SECONDARY CYL. REPACK INCLUDES R&R	1.5	1.5
135	SECONDARY CYL. REMOVE AND CLEAN	2.5	2.5
135	SECONDARY CYL. ASSEMBLE AND INSTALL	2.5	2.5
135	FITTING R&R	1.0	1.0

MAST, CARRIAGE, AND FORKS

PROB.		ACNR	ACNM/ NM
CODE	OPERATION DESCRIPTION	TIME	TIME
140	MAST AND CARRIAGE R&R	1.5	1.5
140	MAST AND CARRIAGE INSTALL	1.0	1.0
140	SHIM AND ADJUST CHANNELS (ALL)	3.0	3.0
140	INNER CHANNEL R&R	1.4	1.4
140	CARRIAGE R&R	NA	1.5
140	BEARING, CARRIAGE R&R ONE ADD 0.2 FOR SECOND	1.5	1.5
140	CHAIN MAST R&R ONE	0.5	.05
140	CROSSHEAD REPLACE	0.8	0.8
140	CROSSHEAD ROLLER, BUSHING OR BEARING REPLACE	0.8	0.8
140	FORK LOCK REPLACE	0.2	0.2
140	FORK REPLACE	0.5	0.5
140	CARRIAGE, ADJUST	1.5	1.5
140	REACH ASSEMBLE, REPLACE	1.5	NA
140	REACH, DISSAMBLE AND ASSEMBLE	4.5	NA

STEERING SYSTEM

PROB.		ACNR	ACNM/ NM
CODE	OPERATION DESCRIPTION	TIME	TIME
145	STEERING WHEEL, REPLACE	0.2	0.2
145	STEERING GEAR, REPLACE	0.7	0.7
145	STEERING SHAFT, REPLACE	3.0	3.0
145	STEER MOTOR, REPLACE	0.4	0.4
145	EPS UNIT, REPLACE	0.8	0.8
145	STEERING GERA BOX POTENTIOMETER, REPLACE	0.3	0.3
145	TEST EPS SYSTEM	1.0	1.0

ACNR30/40 ACNM30/35 NM30/35B

REACH ASSEMBLY

PROB.		ACNR	ACNM/ NM
CODE	OPERATION DESCRIPTION	TIME	TIME
150	REACH R&R	1.5	NA
150	REACH, REBUILD	4.5	NA
150	REACH CYLINDER, REPLACE	0.5	0.5
150	REACH CYLINDER, REBUILD INCLUDER R&R	1.5	1.5
150	FITTING, REPLACE	0.2	0.2
150	TILT CYLINDER, REPLACE	0.4	0.4
150	TILT CYLINDER, REBUILD INCLUDES R&R	1.5	1.5
150	HOSE, REPLACE ONE	0.5	0.5
150	SPACERS ADD OR REMOVE TO ADJUST TILT DEGREE	0.5	0.5
150	REACH PINS, REPLACE	0.2	0.2

ACCELERATOR

PROB.		ACNR	ACNM/ NM
CODE	OPERATION DESCRIPTION	TIME	TIME
700	ACCERERATOR, REPLACE	0.5	0.5
700	MICROSWITCH, REPLACE	0.2	0.2
700	REPAIR ACCELERATOR	0.8	0.8
700	ALLELERATOR PC BOARD, REPLACE	0.3	0.3

CONTACTORS

PROB.		ACNR	ACNM/ NM
CODE	OPERATION DESCRIPTION	TIME	TIME
710	CONTACTOR TIPS, REPLACE	0.3	0.3
710	CONTACTOR, REPLACE	0.8	0.8
710	CONTACTOR COIL, REPLACE	0.6	0.6

DRIVE MOTOR

PROB.		ACNR	ACNM/ NM
CODE	OPERATION DESCRIPTION	TIME	TIME
715	DRIVE MOTOR, REPLACE	0.8	0.8
715	BRUSHES, REPLACE	0.5	0.5
715	REBUILD MOTOR	1.5	1.5
715	BRUSH HOLDER, REPLACE	0.3	0.3

ACNR30/40 ACNM30/35 NM30/35B

PRIMARY ELECTRICAL CONTROLS

PROB.		ACNR	ACNM/ NM
CODE	OPERATION DESCRIPTION	TIME	TIME
725	SYSTEM CHECK OUT	1.5	1.5
725	STARTING CURRENT ADJUST	0.5	0.5
725	CURRENT LIMIT ADJUST	0.5	0.5
725	MPU BOARD, REPLACE AND SET	0.5	0.5
725	FET UNIT , REPLACE	0.5	0.5
725	CAPACITORS, REPLACE	0.2	0.2
725	BATTERY SENSOR, REPLACE	0.2	0.2
725	DIODE, REPLACE	0.2	0.2

PUMP MOTOR

PROB.		ACNR	ACNM/ NM
CODE	OPERATION DESCRIPTION	TIME	TIME
740	PUMP MOTOR, REPLACE	1.0	1.0
740	BRUSHES, REPLACE	0.8	0.8
740	REBUILD MOTOR	1.5	1.5

ELECTRIC/GAS/LPG/DIESEL SIT DOWN TRUCKS

01. ENGINE

PROB.		C/P 30-35	C/P 40-60	C/P 80-100	P 150 155	ET 30-35	E 30-35	E 40-60
CODE	OPERATION DESCRIPTION	TIME	TIME	TIME	TIME	TIME	TIME	TIME
01.1000	ENGINE ASSEMBLY R&R - GASOLINE	7.0	7.0	7.2	7.2	0.0	0.0	0.0
01.1010	ENGINE ASSEMBLY R&R - DIESEL	0.0	6.5	6.9	6.9	0.0	0.0	0.0
01.1110	LONG BLOCK R&R - GASOLINE	10.0	10.0	10.2	10.2	0.0	0.0	0.0
01.1110	LONG BLOCK R&R - DIESEL	0.0	9.3	9.7	9.7	0.0	0.0	0.0
01.1200	SHORT BLOCK R&R - GASOLINE	13.5	13.5	13.9	13.9	0.0	0.0	0.0
01.1210	SHORT BLOCK R&R - DIESEL	0.0	13.3	13.7	13.7	0.0	0.0	0.0
01.1300	BARE BLOCK R&R - GASOLINE	20.0	20.0	20.2	20.2	0.0	0.0	0.0
01.1310	BARE BLOCK R&R - DIESEL	0.0	17.8	18.2	18.2	0.0	0.0	0.0
01.2000	FREEZE PLUG/COOLANT LEAK R&R	1.0	1.0	1.0	1.0	0.0	0.0	0.0
01.2010	FREEZE PLUG/COOLANT LEAK R&R ALL	2.0	2.0	2.0	2.0	0.0	0.0	0.0
01.2020	FREEZE PLUG/COOLANT LEAK INCL. ENGINE R&R	7.0	7.0	7.2	7.2	0.0	0.0	0.0
01.2100	PISTON/RING SET R&R (FIRST SET)	10.0	10.0	10.5	10.5	0.0	0.0	0.0
01.2110	PISTON/RING SET R&R (ALL)	10.7	10.7	12.5	12.5	0.0	0.0	0.0
01.2200	CONECTING ROD R&R (FIRST ONE)	10.0	10.0	10.5	10.5	0.0	0.0	0.0
01.2210	CONNECTING ROD R&R (ALL)	12.1	12.1	14.0	14.0	0.0	0.0	0.0
01.2300	CRANKSHAFT OR BEARING R&R	12.0	12.0	12.9	12.9	0.0	0.0	0.0
01.2400	CRANKSHAFT SEAL REAR MAIN R&R	10.0	10.0	10.5	10.5	0.0	0.0	0.0
01.2500	OIL PUMP/DISTRIBUTOR DRIVE R&R	0.7	0.7	0.7	0.7	0.0	0.0	0.0
01.2600	FRONT PULLEY R&R (CRANK)	20.	2.0	2.5	2.5	0.0	0.0	0.0
01.2700	FLYWHEEL/FLYWHEEL RING GEAR R&R	6.7	6.7	6.9	6.9	0.0	0.0	0.0
01.2800	CYLINDER HEAD/GASKET R&R	4.3	4.3	5.2	5.2	0.0	0.0	0.0
01.2850	CAMSHAFT R&R	5.7	5.7	6.4	6.4	0.0	0.0	0.0
01.2860	CAMSHAFT INCL. BEARINGS R&R	6.7	6.7	6.7	6.7	0.0	0.0	0.0
01.2900	CAM GEAR R&R	5.1	5.1	5.6	5.6	0.0	0.0	0.0
01.3000	FLWHELL BEARING R&R	0.2	0.2	0.2	0.2	0.0	0.0	0.0
01.3010	FLYWHEEL BEARING INCL. ENGINE R&R	6.2	6.2	6.4	6.4	0.0	0.0	0.0
01.3100	FLYWHEEL HOUSING R&R	0.7	0.7	0.7	0.7	0.0	0.0	0.0
01.3110	FLWHEEL HOUSING INCL. ENGINE R&R	6.7	6.7	6.9	6.9	0.0	0.0	0.0
01.3150	FLEX PLATE R&R	6.4	6.4	6.6	6.6	0.0	0.0	0.0
01.3200	INPUT GUIDE R&R	6.4	6.4	7.0	7.0	0.0	0.0	0.0
01.3300	VALVE GUID R&R (FIRST)	0.5	0.5	0.5	0.5	0.0	0.0	0.0
01.3310	VALVE GUIDE R&R (ALL)	1.0	1.0	1.4	1.4	0.0	0.0	0.0
01.3350	VALVE SEAT R&R (FIRST)	0.5	0.5	0.5	0.5	0.0	0.0	0.0
01.3400	VALVE COVER/GASKET R&R	0.8	0.8	0.8	0.8	0.0	0.0	0.0
01.3410	ROCKER SHAFT/ARM R&R	1.8	1.8	1.8	1.8	0.0	0.0	0.0
01.3420	VALVE R&R (FIRST)	0.5	0.5	0.5	0.5	0.0	0.0	0.0
01.3430	VALVE R&R (ALL)	1.1	1.1	1.5	1.5	0.0	0.0	0.0
01.3440	VALVE SPRING/SEAL R&R (FIRST)	0.9	0.9	1.0	1.0	0.0	0.0	0.0
01.3450	VALVE SPRING/SEAL R&R (ALL)	1.5	1.5	2.0	2.0	0.0	0.0	0.0
01.3460	VALVE LIFTER R&R ALL	5.4	5.4	6.1	6.1	0.0	0.0	0.0
01.3500	BROKEN MOUNT BOLTS IN ENGINE BLOCK R&R	7.0	7.0	7.9	7.9	0.0	0.0	0.0
01.3520	ENGINE MOUNT R&R (EACH)	1.0	1.0	1.0	1.0	0.0	0.0	0.0

CONTINUED

ELECTRIC/GAS/LPG/DIESEL SIT DOWN TRUCKS

01. ENGINE CONTINUED

PROB.		C/P 30-35	C/P 40-60	C/P 80-100	P 150 155	ET 30-35	E 30-35	E 40-60
CODE	OPERATION DESCRIPTION	TIME	TIME	TIME	TIME	TIME	TIME	TIME
01.3530	ENGINE MOUNT R&R RUBBER	0.7	0.7	0.7	0.7	0.0	0.0	0.0
01.3600	FRONT COVER/GASKET OIL LEAK	3.5	3.5	4.5	4.5	0.0	0.0	0.0
01.3610	FRONT COVER SEAL R&R	6.0	2.1	2.6	2.6	0.0	0.0	0.0
01.3620	PUMP DRIVE CHAIN/SPROCKET/BEARING R&R	5.0	5.0	0.0	0.0	0.0	0.0	0.0
01.3630	TIMING CHAIN/CRANK AND CAM GEAR R&R	6.0	6.0	7.0	7.0	0.0	0.0	0.0
01.3800	OIL PAN/GASKET R&R	3.0	3.2	6.8	6.8	0.0	0.0	0.0
01.3810	DRAIN PLUG/GASKET	0.5	0.5	0.5	0.5	0.0	0.0	0.0
01.3820	OIL PUMP R&R	4.0	4.2	8.0	8.0	0.0	0.0	0.0
01.3830	OIL FILTER HOUSING GASKET R&R	06.	0.6	0.6	0.6	0.0	0.0	0.0
01.3850	PCV VALVE R&R	0.5	0.5	0.5	0.5	0.0	0.0	0.0
01.3860	PCV VALVE HOSE R&R	0.5	0.5	0.5	0.5	0.0	0.0	0.0
01.3870	AIR FILTER ASSEMBLY R&R	0.5	0.5	0.5	0.5	0.0	0.0	0.0
01.3880	AIR FILTER ELEMENT R&R	0.5	0.5	0.5	0.5	0.0	0.0	0.0
01.3890	AIR FILTER HOSE R&R	0.5	0.5	0.5	0.5	0.0	0.0	0.0
01.3900	GOVERNOR ASSEMBLY R&R	1.0	1.0	1.0	1.0	0.0	0.0	0.0
01.3910	GOVERNOR - CAM BAND KIT R&R	1.2	1.2	1.2	1.2	0.0	0.0	0.0
01.3920	GOVERNOR - LEVER/SPRING R&R	0.0	0.5	0.5	0.5	0.0	0.0	0.0
01.3930	GOVERNOR - LINKAGE FAILURE/MISC.	0.7	0.7	0.7	0.7	0.0	0.0	0.0
01.3990	ENGINE MISCELLANEOUS	0.0	0.0	0.0	0.0	0.0	0.0	0.0
01.7000	ENGINE ASSEMBLY OVERHAUL - GASOLINE	21.8	21.8	22.6	22.6	0.0	0.0	0.0
01.7010	ENGINE ASSEMBLY OVERHAUL - DIESEL	0.0	22.4	23.2	23.2	0.0	0.0	0.0
01.7100	TORQUE CYLINDER HEAD BOLTS	0.6	0.6	0.8	0.8	0.0	0.0	0.0
01.7200	CYLINDER HEAD OVERHAUL	6.2	6.2	7.4	7.4	0.0	0.0	0.0
01.7300	VALVE ADJUSTMENT	1.2	1.2	1.6	1.6	0.0	0.0	0.0

ELECTRIC/GAS/LPG/DIESEL SIT DOWN TRUCKS

02. ENGINE ELECTRICAL

PROB.		C/P 30-35	C/P 40-60	C/P 80-100	P 150 155	ET 30-35	E 30-35	E 40-60
CODE	OPERATION DESCRIPTION	TIME	TIME	TIME	TIME	TIME	TIME	TIME
02.3990	ENGINE ELECTRICAL MISC.	0.0	0.0	0.0	0.0	0.0	0.0	0.0
02.6000	GLOW PLUG R&R	0.0	0.8	0.8	0.8	0.0	0.0	0.0
02.6010	SOLENOID SHUT OFF VALVE R&R	1.0	1.0	1.0	1.0	0.0	0.0	0.0
02.6020	HEATER RIBBON R&R	0.0	0.0	0.9	0.9	0.0	0.0	0.0
02.6100	TEMPERATURE SENDING UNIT R&R	0.5	0.5	0.5	0.5	0.0	0.0	0.0
02.6010	OIL PRESSURE SENDING UNIT R&R	0.5	0.5	0.5	0.5	0.0	0.0	0.0
02.6120	STARTER R&R	1.0	1.0	1.0	1.0	0.0	0.0	0.0
02.6130	STARTER REBUILD INCL. R&R	1.8	1.8	1.8	1.8	0.0	0.0	0.0
02.6140	ALTERNATOR R&R	1.0	1.0	1.0	1.0	0.0	0.0	0.0
02.6160	VOLTAGE REGULATOR R&R	0.5	0.5	0.5	0.5	0.0	0.0	0.0
02.6200	DISTRIBUTOR ASSEMBLY R&R	0.8	0.8	0.8	0.8	0.0	0.0	0.0
02.6210	SPARK PLUG WIRES	0.5	0.5	0.5	0.5	0.0	0.0	0.0
02.6220	SPARK PLUGS R&R	0.5	0.5	0.5	0.5	0.0	0.0	0.0
02.6230	IGNITION COIL R&R	0.5	0.5	0.5	0.5	0.0	0.0	0.0
02.6240	IGNITOR/ELECTRONIC R&R	1.0	1.0	1.0	1.0	0.0	0.0	0.0
02.6250	RESISTOR R&R	0.5	0.5	0.0	0.0	0.0	0.0	0.0
02.6260	QUICK GLOW SYSTEM R&R	0.0	1.0	0.0	0.0	0.0	0.0	0.0
02.6270	TEMPERATURE SENSOR (QUICK GLOW) R&R	0.0	0.0	0.0	0.0	0.0	0.0	0.0
02.8000	STARTER FOR 6D95L NEW STYLE (ONLY)	0.0	0.0	1.5	0.0	0.0	0.0	0.0

ELECTRIC/GAS/LPG/DIESEL SIT DOWN TRUCKS

03. EXHAUST SYSTEM

PROB.		C/P 30-35	C/P 40-60	C/P 80-100	P 150 155	ET 30-35	E 30-35	E 40-60
CODE	OPERATION DESCRIPTION	TIME	TIME	TIME	TIME	TIME	TIME	TIME
03.1000	MANIFOLD AND/OR GASKET R&R	2.0	2.0	2.2	2.2	0.0	0.0	0.0
03.1100	MUFLER R&R	1.5	1.5	1.7	1.7	0.0	0.0	0.0
03.2000	EXHAUST PIPE R&R	1.0	1.0	1.0	1.0	0.0	0.0	0.0
03.3000	LOOSE CONNECTION/TIGHTEN BOLTS	0.5	0.5	0.5	0.5	0.0	0.0	0.0
03.3990	EXHAUST MISC.	0.0	0.0	0.0	0.0	0.0	0.0	0.0

ELECTRIC/GAS/LPG/DIESEL SIT DOWN TRUCKS

04. COOLING SYSTEM

PROB.		C/P 30-35	C/P 40-60	C/P 80-100	P 150 155	ET 30-35	E 30-35	E 40-60
CODE	OPERATION DESCRIPTION	TIME	TIME	TIME	TIME	TIME	TIME	TIME
04.1000	RADIATOR R&R	3.0	3.0	3.0	3.0	0.0	0.0	0.0
04.1010	RADIATOR LEAK R&R	3.0	3.0	3.0	3.0	0.0	0.0	0.0
04.1020	RADIATOR SHROUD R&R	1.0	1.0	1.0	1.0	0.0	0.0	0.0
04.1030	RADIATOR CAP R&R	0.5	0.5	0.5	0.5	0.0	0.0	0.0
04.1040	RADIATOR DRAIN PETCOCK R&R	0.5	0.5	0.5	0.5	0.0	0.0	0.0
04.1050	RADIATOR HOSES - UPPER R&R	0.5	0.5	0.5	0.5	0.0	0.0	0.0
04.1060	RADIATOR HOSES - LOWER R&R	0.6	0.6	0.6	0.6	0.0	0.0	0.0
04.1070	RADIATOR RECORE	3.0	2.0	2.0	2.0	0.0	0.0	0.0
04.1100	WATER PUMP R&R	2.0	2.0	2.0	2.0	0.0	0.0	0.0
04.2000	FAN BLADE/PULLEY R&R	0.5	0.5	0.5	0.5	0.0	0.0	0.0
04.2010	THERMOSTAT R&R	1.0	1.0	1.0	1.0	0.0	0.0	0.0
04.2030	FAN BELT R&R	0.5	0.5	1.0	1.0	0.0	0.0	0.0
04.3000	HOSE CLAMP R&R	0.5	0.5	0.5	0.5	0.0	0.0	0.0
04.3300	T/M COOLER LINE R&R (ONE)	0.6	0.6	0.6	0.6	0.0	0.0	0.0
04.3350	T/M COOLER HOSE R&R (ONE)	0.5	0.5	0.5	0.5	0.0	0.0	0.0
04.3990	COOLING MISC.	0.0	0.0	0.0	0.0	0.0	0.0	0.0

ELECTRIC/GAS/LPG/DIESEL SIT DOWN TRUCKS

05. FUEL SYSTEM - GASOLINE/DIESEL

PROB.		C/P 30-35	C/P 40-60	C/P 80-100	P 150 155	ET 30-35	E 30-35	E 40-60
CODE	OPERATION DESCRIPTION	TIME	TIME	TIME	TIME	TIME	TIME	TIME
05.1000	CARBURETOR R&R	1.0	1.0	1.0	1.0	0.0	0.0	0.0
05.1100	INJECTION PUMP R&R	0.0	2.1	2.5	2.5	0.0	0.0	0.0
05.1110	SHUT OFF SOLENOID R&R	0.0	1.0	1.0	1.0	0.0	0.0	0.0
05.1120	DSL FEED PUMP R&R (INTERNAL TYPE)	0.0	2.6	2.6	2.6	0.0	0.0	0.0
05.1130	DSL FEED PUMP R&R (EXTERNAL TYPE)	0.0	1.0	1.0	1.0	0.0	0.0	0.0
05.1210	INJECTOR NOZZLE R&R (EACH)	0.0	0.5	0.5	0.5	0.0	0.0	0.0
05.1300	GAS FUEL PUMP/GASKET R&R	0.5	0.5	0.7	0.7	0.0	0.0	0.0
05.1500	INTAKE MANIFOLD R&R	1.4	1.4	1.6	1.6	0.0	0.0	0.0
05.3000	FUEL TANK COVER GASKET R&R	0.7	0.7	0.7	0.7	0.0	0.0	0.0
05.3100	FUEL PICK UP TUBE R&R	0.9	0.9	0.9	0.9	0.0	0.0	0.0
05.3150	FUEL PETCOCK R&R	0.5	0.5	0.5	0.5	0.0	0.0	0.0
05.3200	DASHPOT R&R	0.5	0.5	0.5	0.5	0.0	0.0	0.0
05.3250	FUEL SHUT OFF VALVE R&R	0.5	0.5	0.5	0.5	0.0	0.0	0.0
05.3260	RETURN SPRING R&R	0.5	0.5	0.5	0.5	0.0	0.0	0.0
05.3300	FUEL FILTER R&R	0.5	0.5	0.5	0.5	0.0	0.0	0.0
05.3350	FUEL LINE/HOSE R&R	0.5	0.5	0.5	0.5	0.0	0.0	0.0
05.3400	ENGINE SHUT DOWN CABLE R&R	0.0	0.5	0.5	0.5	0.0	0.0	0.0
05.3450	CHOKE CABLE R&R	0.6	0.6	0.6	0.6	0.0	0.0	0.0
05.3500	INTAKE MANIFOLD GASKET R&R	1.2	1.2	1.2	1.2	0.0	0.0	0.0
05.3510	INTAKE MANIFOLD HOSE R&R	0.5	0.5	0.5	0.5	0.0	0.0	0.0
05.3520	INTAKE STUD/BOLT R&R	0.5	0.5	0.5	0.5	0.0	0.0	0.0
05.3990	FUEL MISC.	0.0	0.0	0.0	0.0	0.0	0.0	0.0
05.7000	CARBURETOR REPAIR/REBUILD INCL. R&R	1.5	1.5	1.5	1.5	0.0	0.0	0.0
05.7100	CARBURETOR LINKAGE ADJUSTMENT	0.5	0.5	0.5	0.5	0.0	0.0	0.0

ELECTRIC/GAS/LPG/DIESEL SIT DOWN TRUCKS

06. FUEL SYSTEM - LPG

PROB.		C/P 30-35	C/P 40-60	C/P 80-100	P 150 155	ET 30-35	E 30-35	E 40-60
CODE	OPERATION DESCRIPTION	TIME	TIME	TIME	TIME	TIME	TIME	TIME
06.1000	CARBURETOR R&R	1.0	1.0	1.0	1.0	0.0	0.0	0.0
06.1010	CARBURETOR REBUILD INCL. R&R	1.5	1.5	1.5	1.5	0.0	0.0	0.0
06.1100	REGULATOR R&R	0.8	0.8	0.8	0.8	0.0	0.0	0.0
06.1200	LOCKOFF R&R	0.8	0.8	0.8	0.8	0.0	0.0	0.0
06.1300	AV1 DIAPHRAM R&R	0.6	0.6	0.6	0.6	0.0	0.0	0.0
06.2000	RELIEF VALVE R&R	0.5	0.5	0.5	0.5	0.0	0.0	0.0
06.3000	FUEL HOSE/LINE R&R	0.5	0.5	0.5	0.5	0.0	0.0	0.0
06.3050	HOSE COOLANT R&R	0.5	0.5	0.5	0.5	0.0	0.0	0.0
06.3100	TANK BRACKET R&R	0.5	0.5	0.5	0.5	0.0	0.0	0.0
06.3200	REGULATOR/LOCKOFF BRACKET R&R	0.5	0.5	0.5	0.5	0.0	0.0	0.0
06.3250	SPRING R&R	0.5	0.5	0.5	0.5	0.0	0.0	0.0
06.3990	FUEL MISC.	0.0	0.0	0.0	0.0	0.0	0.0	0.0
06.7000	REGULATOR REBUILD INCL. R&R	1.2	1.2	1.2	1.2	0.0	0.0	0.0
06.7100	LOCKOFF REBUILD INCL. R&R	1.1	1.1	1.1	1.1	0.0	0.0	0.0
06.7200	FUEL LEAK REPAIR	0.5	0.5	0.5	0.5	0.0	0.0	0.0

ELECTRIC/GAS/LPG/DIESEL SIT DOWN TRUCKS

10. CLUTCH

PROB.		C/P 30-35	C/P 40-60	C/P 80-100	P 150 155	ET 30-35	E 30-35	E 40-60
CODE	OPERATION DESCRIPTION	TIME	TIME	TIME	TIME	TIME	TIME	TIME
10.1000	PRESSURE PLATE/DISC R&R	2.0	2.0	2.0	0.0	0.0	0.0	0.0
10.2000	THROWGHT BEARING/SLEEVE R&R	2.0	2.0	2.0	0.0	0.0	0.0	0.0
10.2100	CLUTCH HOUSING COVER PLATE R&R	0.5	0.5	0.5	0.0	0.0	0.0	0.0
10.2200	CLUTCH MASTER CYLINDER R&R	1.2	1.2	1.2	0.0	0.0	0.0	0.0
10.2250	CLUTCH RELEASE CYLINDER R&R	1.2	1.2	1.2	0.0	0.0	0.0	0.0
10.2300	CLUTCH ROD/CLEVIS	0.5	0.5	0.5	0.0	0.0	0.0	0.0
10.3000	CLUTCH PEDAL/BUSHING/SHAFT R&R	1.5	1.5	1.5	0.0	0.0	0.0	0.0
10.3100	CLUTCH PEDAL RETURN SPRING R&R	0.5	0.5	0.5	0.0	0.0	0.0	0.0
10.3990	CLUTCH MISC.	0.0	0.0	0.0	0.0	0.0	0.0	0.0

ELECTRIC/GAS/LPG/DIESEL SIT DOWN TRUCKS

13. TORQUE CONVERTOR

PROB.		C/P 30-35	C/P 40-60	C/P 80-100	P 150 155	ET 30-35	E 30-35	E 40-60
CODE	OPERATION DESCRIPTION	TIME	TIME	TIME	TIME	TIME	TIME	TIME
13.1000	CONVERTOR ASSMEBLY R&R	8.0	8.0	8.5	5.0	0.0	0.0	0.0
13.1100	CONVERTOR CASE R&R	9.5	9.5	10.0	6.5	0.0	0.0	0.0
13.1300	GEAR PUMP R&R	9.5	9.5	10.0	6.5	0.0	0.0	0.0
13.2000	OIL LEAK/RESEAL TC	9.0	9.0	9.5	6.0	0.0	0.0	0.0
13.3000	FLEX PLATE R&R	6.4	6.4	6.6	5.0	0.0	0.0	0.0
13.3990	CONVERTOR MISC.	0.0	0.0	0.0	0.0	0.0	0.0	0.0
13.7000	CONVERTOR ASSEMBLY OVERHAUL	9.5	9.5	10.0	5.5	0.0	0.0	0.0
13.7010	CONVERTOR RESEAL (WITH ENGINE OUT)	2.0	2.0	2.0	2.0	0.0	0.0	0.0

ELECTRIC/GAS/LPG/DIESEL SIT DOWN TRUCKS

14. TRANSMISSION MANUAL SHIFT

PROB.		C/P 30-35	C/P 40-60	C/P 80-100	P 150 155	ET 30-35	E 30-35	E 40-60
CODE	OPERATION DESCRIPTION	TIME	TIME	TIME	TIME	TIME	TIME	TIME
14.1000	TRANSMISSION ASSEMBLY R&R	11.0	11.0	11.5	0.0	0.0	0.0	0.0
14.1100	TRANSMISSION CASE R&R	22.5	22.5	25.0	0.0	0.0	0.0	0.0
14.2000	SHIFT FORK/SHAFT R&R	1.5	1.5	1.7	0.0	0.0	0.0	0.0
14.2100	SHIFT LEVER ASSEMBLY R&R	0.7	0.7	0.7	0.0	0.0	0.0	0.0
14.3000	OIL LEAK/GASKET/SEAL	1.0	1.0	1.0	0.0	0.0	0.0	0.0
14.3100	LINKAGE MISC. R&R	1.0	1.0	1.0	0.0	0.0	0.0	0.0
14.3990	TRANSMISSION MISC.	0.0	0.0	0.0	0.0	0.0	0.0	0.0
14.7000	TRANSMISSION ASSEMBLY OVERHAUL	22.0	22.0	22.5	0.0	0.0	0.0	0.0

ELECTRIC/GAS/LPG/DIESEL SIT DOWN TRUCKS

15. TRANSMISSION TORQUFLOW

PROB.		C/P 30-35	C/P 40-60	C/P 80-100	P 150 155	ET 30-35	E 30-35	E 40-60
CODE	OPERATION DESCRIPTION	TIME	TIME	TIME	TIME	TIME	TIME	TIME
15.1000	TRANSMISSION ASSEMBLY R&R	11.0	11.0	11.5	8.5	0.0	0.0	0.0
15.1100	CLUTCH PACK ASSEMBLY RESEAL/REPLACE	20.5	20.5	20.5		0.0	0.0	0.0
15.2000	CONTROL VALVE ASSEMBLY R&R	1.1	1.1	1.1		0.0	0.0	0.0
15.2050	CONTROL VALVE GASKET R&R	1.0	1.0	1.0		0.0	0.0	0.0
15.2100	CONTROL VALVE SPOOL SEAL R&R (ONE)	1.6	1.6	1.6		0.0	0.0	0.0
15.2150	INCHING LINKAGE/PIN R&R	0.5	0.5	0.5		0.0	0.0	0.0
15.2200	NETURAL SWITCH R&R	0.5	0.5	0.5		0.0	0.0	0.0
15.2210	FILTER R&R (INTERNAL)	1.0	1.0	1.0		0.0	0.0	0.0
15.3000	PINION SEAL R&R	23.5	23.5	23.5		0.0	0.0	0.0
15.3100	SEAL RINGS/RETAINER R&R	7.5	7.5	8.0	8.0	0.0	0.0	0.0
15.3110	RETAINER/O-RING INTERNAL LEAKAGE R&R	7.5	7.5	7.5	7.5	0.0	0.0	0.0
15.3200	SIDE COVER GASKET R&R	1.2	1.2	1.2	0.0	0.0	0.0	0.0
15.3400	OIL LEAK EXTERNAL O-RING/PLUG/GASKET R&R	0.5	0.5	0.5	0.5	0.0	0.0	0.0
15.3990	TRANSMISSION MISC.	0.0	0.0	0.0	0.0	0.0	0.0	0.0
15.7000	TRANSMISSION ASSEMBLY OVER HAUL	24.5	24.5	24.5	0.0	0.0	0.0	0.0
15.7010	TRANSMISSION ASSEMBLY OVERHAUL - 2 SPEED	0.0	25.5	25.5	25.5	0.0	0.0	0.0
15.7020	TRANSMISSION CASE R&R	24.5	24.5	24.5	24.5	0.0	0.0	0.0
15.7100	CONTROL VALVE OVER HAUL	2.0	2.0	2.0	2.5	0.0	0.0	0.0

ELECTRIC/GAS/LPG/DIESEL SIT DOWN TRUCKS

16. TRANSFER CASE

PROB.		C/P 30-35	C/P 40-60	C/P 80-100	P 150 155	ET 30-35	E 30-35	E 40-60
CODE	OPERATION DESCRIPTION	TIME	TIME	TIME	TIME	TIME	TIME	TIME
16.1300	RING/PINION R&R	0.0	0.0	0.0	0.0	9.3	10.8	10.8
16.1400	TRANSFER CASE R&R	0.0	0.0	0.0	0.0	10.3	11.3	11.3
16.1450	TRANSFER GEARS R&R (ALL)	0.0	0.0	0.0	0.0	6.0	10.0	10.0

ELECTRIC/GAS/LPG/DIESEL SIT DOWN TRUCKS

17. DRIVE MOTOR

PROB.		C/P 30-35	C/P 40-60	C/P 80-100	P 150 155	ET 30-35	E 30-35	E 40-60
CODE	OPERATION DESCRIPTION	TIME	TIME	TIME	TIME	TIME	TIME	TIME
17.1000	MOTOR R&R	0.0	0.0	0.0	0.0	3.0	4.0	4.2
17.2000	BRUSHES R&R	0.0	0.0	0.0	0.0	1.0	1.2	1.2
17.3000	BEARING R&R	0.0	0.0	0.0	0.0	4.0	5.2	5.4
17.3100	SEAL R&R	0.0	0.0	0.0	0.0	3.5	4.5	4.7
17.3990	MOTOR MISC.	0.0	0.0	0.0	0.0	0.0	0.0	0.0
17.7000	MOTOR OVERHAUL INCL. R&R	0.0	0.0	0.0	0.0	5.0	6.0	6.2

ELECTRIC/GAS/LPG/DIESEL SIT DOWN TRUCKS

18. HYDRAULIC MOTOR

PROB.		C/P 30-35	C/P 40-60	C/P 80-100	P 150 155	ET 30-35	E 30-35	E 40-60
CODE	OPERATION DESCRIPTION	TIME	TIME	TIME	TIME	TIME	TIME	TIME
18.1100	MOTOR R&R	0.0	0.0	0.0	0.0	1.3	1.5	1.5
18.2100	BRUSHES R&R	0.0	0.0	0.0	0.0	1.1	1.2	1.2
18.3100	BEARING R&R	0.0	0.0	0.0	0.0	3.3	3.5	3.5
18.3990	MOTOR MISC.	0.0	0.0	0.0	0.0	0.0	0.0	0.0
18.7100	MOTOR OVERHAUL INC. R&R	0.0	0.0	0.0	0.0	3.3	3.5	3.5

ELECTRIC/GAS/LPG/DIESEL SIT DOWN TRUCKS

19. POWER STEER MOTOR

PROB.		C/P 30-35	C/P 40-60	C/P 80-100	P 150 155	ET 30-35	E 30-35	E 40-60
CODE	OPERATION DESCRIPTION	TIME	TIME	TIME	TIME	TIME	TIME	TIME
19.1200	MOTOR R&R	0.0	0.0	0.0	0.0	1.0	1.1	1.1
19.2200	BRUSHES R&R	0.0	0.0	0.0	0.0	1.6	1.1	1.1
19.3200	BEARING R&R	0.0	0.0	0.0	0.0	2.0	2.5	2.5
19.3990	MOTOR MISC.	0.0	0.0	0.0	0.0	0.0	0.0	0.0
19.7200	MOTOR OVERHAUL INCL. R&R	0.0	0.0	0.0	0.0	2.0	2.5	2.5

ELECTRIC/GAS/LPG/DIESEL SIT DOWN TRUCKS

21. DRIVE AXLE

PROB.		C/P 30-35	C/P 40-60	C/P 80-100	P 150 155	ET 30-35	E 30-35	E 40-60
CODE	OPERATION DESCRIPTION	TIME	TIME	TIME	TIME	TIME	TIME	TIME
21.1000	RING/PINION GEAR R&R	22.0	22.0	22.5	22.5	11.5	12.5	12.5
21.1100	DIFFERENTIAL CASE GASKET R&R	5.5	5.5	5.8	5.8	2.0	5.5	5.5
21.1200	DIFFERENTIAL HOUSING R&R	7.0	7.0	7.3	7.3	9.2	7.0	7.0
21.2000	HUB ASSEMBLY R&R	1.8	1.8	1.9	1.9	3.1	1.8	1.8
21.2100	AXLE R&R	1.0	1.0	1.0	1.0	0.0	1.0	1.0
21.3000	WHEEL BEARING R&R	1.2	1.2	1.3	1.3	5.0	1.2	1.2
21.3100	HUB BOLT R&R	2.0	2.0	2.1	2.1	2.0	2.0	2.0
21.3200	OIL SEAL R&R (ONE SIDE)	1.5	1.5	1.5	1.5	0.0	1.5	1.5
21.3300	OIL SEAL R&R	0.0	0.0	0.0	0.0	3.1	0.0	0.0
21.3990	DIFFERENTIAL MISC.	0.0	0.0	0.0	0.0	0.0	0.0	0.0

ELECTRIC/GAS/LPG/DIESEL SIT DOWN TRUCKS

24. STEER AXLE

PROB.		C/P 30-35	C/P 40-60	C/P 80-100	P 150 155	ET 30-35	E 30-35	E 40-60
CODE	OPERATION DESCRIPTION	TIME	TIME	TIME	TIME	TIME	TIME	TIME
24.1000	AXLE ASSEMBLY R&R	2.0	2.0	2.0	2.0	2.5	2.0	2.0
24.2000	LINK R&R	1.0	1.0	1.0	1.0	1.0	1.0	1.0
24.2050	LINK BUSHING CYLINDER ROD SIDE R&R	1.5	1.5	1.5	1.5	0.0	1.5	1.5
24.2051	LINK BUSHING KNUCKLE SIED R&R	1.0	1.0	1.0	1.0	1.0	1.0	0.0
24.2100	KING PIN R&R	1.5	1.5	1.3	1.3	0.0	1.5	1.5
24.2200	BELLCRANK/BEARINGS R&R	1.9	1.9	1.9	1.9	0.0	0.0	0.0
24.2300	HUB R&R	1.9	1.9	1.9	1.9	0.0	1.9	1.9
24.2400	BALL STUD R&R	1.3	1.3	1.3	1.3	0.0	0.0	0.0
24.3000	STEER AXLE SUPPORT BEARINGS	1.8	1.8	1.8	1.8	2.5	1.8	1.8
24.3100	HUB BEARING R&R	1.0	1.0	1.0	1.0	1.0	1.0	1.0
24.3200	HUB BOLT R&R (ONE)	0.9	0.9	0.9	0.9	0.9	0.9	0.9
24.3210	HUB BOLT R&R (ALL)	1.4	1.4	1.4	1.4	1.4	1.4	1.4
24.3300	GREASE SEAL R&R	0.8	0.8	0.8	0.8	0.8	0.8	0.8
24.3400	AXLE SWING LIMIT PLATE	0.0	0.8	0.8	0.8	0.0	0.8	0.8
24.3500	STOPPER BOLT REPAIR/REPLACE/ADJUST	0.5	0.5	0.5	0.5	0.5	0.5	0.5
24.3990	AXLE MISC.	0.0	0.0	0.0	0.0	0.0	0.0	0.0
24.7000	SHIM STEER AXLE ASSEMBLY	1.5	1.5	1.5	1.5	0.0	1.5	1.5
24.7100	ADJUST ROD END ALIGNMENT	0.6	0.6	0.6	0.6	0.0	0.6	0.6

ELECTRIC/GAS/LPG/DIESEL SIT DOWN TRUCKS

27. DRIVE TIRE/WHEEL

PROB.		C/P 30-35	C/P 40-60	C/P 80-100	P 150 155	ET 30-35	E 30-35	E 40-60
CODE	OPERATION DESCRIPTION	TIME	TIME	TIME	TIME	TIME	TIME	TIME
27.1000	RIM R&R	1.0	1.0	1.0	1.0	1.0	1.0	1.0
27.1100	TIRE COUSHION R&R	1.0	1.0	1.0	0.0	1.0	1.0	1.0
27.1110	TIRE PNEUMATIC R&R	1.0	1.0	1.0	1.0	1.0	0.0	0.0
27.1120	TIRE R&R DUAL (INNER)	1.2	1.2	1.2	1.2	0.0	0.0	0.0
27.3990	DRIVE TIRE/WHEEL MISC.	0.0	0.0	0.0	0.0	0.0	0.0	0.0

ELECTRIC/GAS/LPG/DIESEL SIT DOWN TRUCKS

28. STEER TIRE/WHEEL

PROB.		C/P 30-35	C/P 40-60	C/P 80-100	P 150 155	ET 30-35	E 30-35	E 40-60
CODE	OPERATION DESCRIPTION	TIME	TIME	TIME	TIME	TIME	TIME	TIME
28.1000	RIM R&R	1.0	1.0	1.0	1.0	1.0	1.0	1.0
28.1100	TIRE CUSHION R&R	1.0	1.0	1.0	0.0	1.0	1.0	1.0
28.1110	TIRE PNEUMATIC	1.0	1.0	1.0	1.0	1.0	0.0	0.0
28.3990	STEER TIRE/WHEEL MISC.	0.0	0.0	0.0	0.0	0.0	0.0	0.0

ELECTRIC/GAS/LPG/DIESEL SIT DOWN TRUCKS

30. BRAKE SERVICE/PARKING

PROB.		C/P 30-35	C/P 40-60	C/P 80-100	P 150 155	ET 30-35	E 30-35	E 40-60
CODE	OPERATION DESCRIPTION	TIME	TIME	TIME	TIME	TIME	TIME	TIME
30.1000	DRUM/DISC R&R (ONE)	1.5	1.5	1.5	1.5	1.3	1.5	1.5
30.1010	DRUM/DISC R&R (BOTH SIDES)	2.5	2.5	2.5	2.5	2.3	2.5	2.5
30.1100	BRAKE BACKING PLATE ASSEMBLY R&R (ONE)	2.0	2.0	2.0	2.0	0.0	2.0	2.0
30.1110	BRAKE BACKING PLATE ASSEMBLY R&R (BOTH)	3.0	3.0	3.0	3.0	0.0	4.0	4.0
30.1200	BRAKE SHOES R&R	1.5	1.5	1.5	1.5	0.0	1.5	1.5
30.1300	WHEEL CYLINDER R&R	2.0	2.0	2.1	2.1	0.0	2.0	2.0
30.1500	CALIPER ASSEMBLY R&R	0.0	0.0	1.0	1.0	1.5	0.0	0.0
30.2000	BRAKE COMPONENT SPRING/ADJUSTER R&R	1.2	1.2	1.2	1.2	1.2	1.2	1.2
30.2100	MASTER CYLIDER R&R	1.0	1.0	1.2	1.2	1.2	1.0	1.0
30.2110	MASTER CYLINDER POWER BRAKES R&R	0.0	0.0	1.7	1.7	0.0	0.0	0.0
30.2200	ACCUMULATOR R&R	0.0	0.0	1.1	1.1	0.0	0.0	0.0
30.2500	BRAKE PADS R&R	0.0	0.0	1.3	1.3	1.3	0.0	0.0
30.2600	ROTOR R&R	0.0	0.0	1.5	1.5	1.5	0.0	0.0
30.3000	BACKING PLATE BOLTS R&R	1.5	1.5	1.5	1.5	0.0	1.5	1.5
30.3050	PARKING BRAKE HANDLE R&R	0.7	0.7	0.7	0.7	0.7	0.7	0.7
30.3100	PARKING BRAKE CABLE LOWER R&R	2.0	2.0	2.0	2.0	1.5	2.0	2.0
30.3110	PARKING BRAKE CABLE UPPER R&R	1.0	1.0	1.0	1.0	1.0	1.0	1.0
30.3200	BRAKE PIPE R&R (ONE)	1.0	1.0	1.0	1.0	1.0	1.0	1.0
30.3300	BRAKE RESERVOIR R&R	0.6	0.6	0.0	0.0	0.0	0.6	0.6
30.3400	ACCUMULATOR PRESSURE SWITCH R&R	0.0	0.0	0.5	0.5	0.0	0.0	0.0
30.3450	ACCUMULATOR CHECK VALVE R&R	0.0	0.0	0.7	0.7	0.0	0.0	0.0
30.3990	BRAKE MISC.	0.0	0.0	0.0	0.0	0.0	0.0	0.0
30.7000	BLEED BRAKES	0.5	0.5	0.5	0.5	0.5	0.5	0.5
30.7100	MASTER CYLINDER OVERHAUL INCL. R&R	1.5	1.5	1.5	1.5	1.5	1.5	1.5

ELECTRIC/GAS/LPG/DIESEL SIT DOWN TRUCKS

33. STEERING WHEEL ASSEMBLY

PROB.		C/P 30-35	C/P 40-60	C/P 80-100	P 150 155	ET 30-35	E 30-35	E 40-60
CODE	OPERATION DESCRIPTION	TIME	TIME	TIME	TIME	TIME	TIME	TIME
33.1000	HYDROSTATIC UNIT R&R	1.8	1.8	1.8	1.8	1.8	1.8	1.8
33.2000	GEAR BOX VALVE R&R	2.8	2.8	3.1	0.0	0.0	0.0	0.0
33.3990	STEERING MISC.	0.0	0.0	0.0	0.0	0.0	0.0	0.0
33.7000	HYDROSTATIC UNIT REBUILB INCL. R&R	2.5	2.5	3.2	3.2	3.2	2.5	2.5

ELECTRIC/GAS/LPG/DIESEL SIT DOWN TRUCKS

34. STEERING COLUMN ASSEMBLY

PROB.		C/P 30-35	C/P 40-60	C/P 80-100	P 150 155	ET 30-35	E 30-35	E 40-60
CODE	OPERATION DESCRIPTION	TIME	TIME	TIME	TIME	TIME	TIME	TIME
34.3300	FLOW CONTROL VALVE R&R	0.0	0.0	1.0	1.0	0.0	0.0	0.0
34.3350	COLUMN/UNIVERSAL JOINT R&R	1.0	1.0	1.0	1.0	1.0	1.0	1.0
34.3400	COLUMN BUSHINGS R&R	1.0	1.0	1.0	1.0	1.0	1.0	1.0
34.3450	COLUMN SEAL R&R	1.0	1.0	1.0	1.0	1.0	1.0	1.0
34.3990	COLUMN MISC.	0.0	0.0	0.0	0.0	0.0	0.0	0.0

ELECTRIC/GAS/LPG/DIESEL SIT DOWN TRUCKS

35. STEER COLUMN LINKAGE

PROB.		C/P 30-35	C/P 40-60	C/P 80-100	P 150 155	ET 30-35	E 30-35	E 40-60
CODE	OPERATION DESCRIPTION	TIME	TIME	TIME	TIME	TIME	TIME	TIME
35.1000	SHIFT SHAFT R&R	0.6	0.6	0.6	0.6	0.0	0.0	0.0
35.1500	SHIFT CABLE ADJUSTMENT	1.5	1.5	1.5	0.0	0.0	0.0	0.0
30.1501	SHIFT CABLE R&R	1.0	1.0	1.0	0.0	0.0	0.0	0.0
30.2000	SHIFT SHAFT BUSHING R&R	0.8	0.8	0.8	0.0	0.0	0.0	0.0
30.3990	LINKAGE MISC.	0.0	0.0	0.0	0.0	0.0	0.0	0.0

ELECTRIC/GAS/LPG/DIESEL SIT DOWN TRUCKS

36. PEDALS

PROB.		C/P 30-35	C/P 40-60	C/P 80-100	P 150 155	ET 30-35	E 30-35	E 40-60
CODE	OPERATION DESCRIPTION	TIME	TIME	TIME	TIME	TIME	TIME	TIME
36.2100	ACCELERATOR/BRAKE/INCHING PEDAL R&R	0.9	0.9	0.9	0.9	0.9	0.9	0.9
36.3000	ROD END R&R	0.5	0.5	0.5	0.5	0.5	0.5	0.5
36.3100	CLEVIS PIN R&R	0.5	0.5	0.5	0.5	0.5	0.5	0.5
36.3200	RETURN SPRING R&R	0.5	0.5	0.5	0.5	0.5	0.5	0.5
36.3990	PEDAL MISC.	0.0	0.0	0.0	0.0	0.0	0.0	0.0

ELECTRIC/GAS/LPG/DIESEL SIT DOWN TRUCKS

37. ACCELERATOR PEDAL

PROB.		C/P 30-35	C/P 40-60	C/P 80-100	P 150 155	ET 30-35	E 30-35	E 40-60
CODE	OPERATION DESCRIPTION	TIME	TIME	TIME	TIME	TIME	TIME	TIME
37.2200	ACCELERATOR CABLE R&R	1.0	1.0	1.0	1.0	0.0	0.0	0.0
37.3990	ACCELERATOR MISC.	0.0	0.0	0.0	0.0	0.0	0.0	0.0

ELECTRIC/GAS/LPG/DIESEL SIT DOWN TRUCKS

40. OVERHEAD GUARD

PROB.		C/P 30-35	C/P 40-60	C/P 80-100	P 150 155	ET 30-35	E 30-35	E 40-60
CODE	OPERATION DESCRIPTION	TIME	TIME	TIME	TIME	TIME	TIME	TIME
40.1000	OVERHEAD GUARD ASSEMBLY R&R	1.0	2.0	1.0	2.5	2.0	2.0	2.0
40.1050	BOLTS R&R (ONE)	0.2	0.2	0.2	0.2	0.2	0.2	0.2
40.1100	STAY R&R	1.0	1.0	0.5	0.5	1.0	1.0	1.0
40.3990	GUARD MISC.	0.0	0.0	0.0	0.0	0.0	0.0	0.0

ELECTRIC/GAS/LPG/DIESEL SIT DOWN TRUCKS

41. FRAME CHASSIS

PROB.		C/P 30-35	C/P 40-60	C/P 80-100	P 150 155	ET 30-35	E 30-35	E 40-60
CODE	OPERATION DESCRIPTION	TIME	TIME	TIME	TIME	TIME	TIME	TIME
41.1200	COUNTER WEIGHT R&R	0.8	0.8	0.8	0.7	0.8	0.8	0.8
41.3000	FUEL/HYDRAULIC DRAIN PLUG R&R	0.6	0.6	0.6	0.6	0.6	0.6	0.6
41.3100	FUEL/HYDRAULIC COVER PLATE	1.0	1.0	1.0	1.0	1.0	1.0	1.0
41.3200	FUEL CAP LEAKING	0.5	0.5	0.5	0.5	0.0	0.0	0.0
41.3300	FUEL/HYDRAULIC TANK LEAK (WELDING)	2.0	2.0	2.0	2.0	2.0	2.0	2.0
41.3990	FRAME MISC.	0.0	0.0	0.0	0.0	0.0	0.0	0.0
41.5001	PAINT POOR FINISH	0.0	0.0	0.0	0.0	0.0	0.0	0.0

ELECTRIC/GAS/LPG/DIESEL SIT DOWN TRUCKS

47. SCR DRIVE CONTROL

PROB.		C/P 30-35	C/P 40-60	C/P 80-100	P 150 155	ET 30-35	E 30-35	E 40-60
CODE	OPERATION DESCRIPTION	TIME	TIME	TIME	TIME	TIME	TIME	TIME
47.1000	MAIN CONTROLLER ASSEMBLY R&R	0.0	0.0	0.0	0.0	2.0	2.0	2.2
47.1200	SCR TEST	0.0	0.0	0.0	0.0	1.0	1.0	1.0
47.1300	DIODE R&R	0.0	0.0	0.0	0.0	1.0	1.0	1.0
47.1400	CONDENSOR R&R	0.0	0.0	0.0	0.0	1.0	1.0	1.0
47.1500	REACTOR R&R	0.0	0.0	0.0	0.0	1.0	1.0	1.0
47.2000	#1 REC. R&R	0.0	0.0	0.0	0.0	1.5	1.0	1.0
47.2010	#2 REC. R&R	0.0	0.0	0.0	0.0	1.2	0.7	0.7
47.2020	#3 REC. R&R	0.0	0.0	0.0	0.0	1.2	0.7	0.7
47.2030	#4 REC. R&R	0.0	0.0	0.0	0.0	1.2	0.7	0.7
47.2040	#5 REC.R&R	0.0	0.0	0.0	0.0	1.2	0.7	0.7
47.2050	SHUNT R&	0.0	0.0	0.0	0.0	1.0	1.0	1.0
47.2100	#22 SNUBBER R&R	0.0	0.0	0.0	0.0	1.2	0.7	0.7
47.2110	#23 SNUBBER R&R	0.0	0.0	0.0	0.0	1.2	0.7	0.7
47.2120	#24 SNUBBER R&R	0.0	0.0	0.0	0.0	1.2	0.7	0.7
47.2030	#25 SNUBBER R&R	0.0	0.0	0.0	0.0	1.2	0.7	0.7
47.2200	THERMAL PROTECTOR R&R	0.0	0.0	0.0	0.0	1.5	1.0	1.0
47.2210	MAIN FUSE R&R	0.0	0.0	0.0	0.0	0.5	0.5	0.5
47.2300	SENSOR R&R	0.0	0.0	0.0	0.0	1.2	0.7	0.7
47.2400	CAPACITOR R&R	0.0	0.0	0.0	0.0	1.2	0.7	0.7
47.2500	MAIN CARD R&R	0.0	0.0	0.0	0.0	1.5	1.0	1.0
47.3000	TMM1 CARD R&R	0.0	0.0	0.0	0.0	1.0	0.8	0.8
47.3050	TMM2 CARD R&R	0.0	0.0	0.0	0.0	1.0	0.8	0.8
47.3100	DRIVER/TIME DELAY R&R	0.0	0.0	0.0	0.0	1.0	1.0	1.0
47.3990	SCR MISC.	0.0	0.0	0.0	0.0	0.0	0.0	0.0
47.7000	LOOSE CONNECTIONS	0.0	0.0	0.0	0.0	0.5	0.5	0.5

ELECTRIC/GAS/LPG/DIESEL SIT DOWN TRUCKS

48. CONTACTOR PANEL

PROB.		C/P 30-35	C/P 40-60	C/P 80-100	P 150 155	ET 30-35	E 30-35	E 40-60
CODE	OPERATION DESCRIPTION	TIME	TIME	TIME	TIME	TIME	TIME	TIME
48.1000	CONTACTOR PANEL R&R	0.0	0.0	0.0	0.0	1.5	1.5	1.5
48.1050	MAIN WIRING HARNESS R&R	0.0	0.0	0.0	0.0	1.7	1.7	1.7
48.2000	FOR/REV CONTACTOR R&R	0.0	0.0	0.0	0.0	0.8	0.8	0.8
48.2010	FOR/REV CONTACTOR TIPS R&R	0.0	0.0	0.0	0.0	0.5	0.5	0.5
48.2020	FOR/REV CONTACTOR COIL R&R	0.0	0.0	0.0	0.0	0.6	0.6	0.6
48.2050	1A CONTACTOR TIPS R&R	0.0	0.0	0.0	0.0	0.5	0.5	0.5
48.2100	1A CONTACTOR R&R	0.0	0.0	0.0	0.0	0.8	0.8	0.8
48.2120	1A CONTACTOR COIL R&R	0.0	0.0	0.0	0.0	0.6	0.6	0.6
48.2200	HYDRAULIC PUMP CONTACTOR R&R	0.0	0.0	0.0	0.0	0.8	0.8	0.8
48.2210	HYD. PUMP CONTACTOR TIPS R&R	0.0	0.0	0.0	0.0	0.5	0.5	0.5
48.2220	HYD. PUMP CONTACTOR COIL R&R	0.0	0.0	0.0	0.0	0.6	0.6	0.6
48.2230	REGEN CONTACTOR COIL R&R	0.0	0.0	0.0	0.0	0.0	0.8	0.8
48.2240	REGEN CONTACTOR TIPS R&R	0.0	0.0	0.0	0.0	0.0	0.5	0.5
48.2250	REGEN CONTACTOR R&R	0.0	0.0	0.0	0.0	0.8	0.8	0.8
48.2290	POWER STEERING FUSE R&R	0.0	0.0	0.0	0.0	0.5	0.5	0.5
48.2300	POWER STEERING PUMP CONTACTOR R&R	0.0	0.0	0.0	0.0	0.8	0.8	0.8
48.2310	P/S STEERING CONTACTOR TIPS R&R	0.0	0.0	0.0	0.0	0.5	0.5	0.5
48.2320	P/S STEERING PUMP CONTACTOR COIL R&R	0.0	0.0	0.0	0.0	0.6	0.6	0.6
48.3000	POTENTIOMETER R&R	0.0	0.0	0.0	0.0	0.8	0.8	0.8
48.3050	SEAT/BRAKE SWITCH R&R	0.0	0.0	0.0	0.0	0.5	0.5	0.5
48.3100	ACCELERATOR R&R	0.0	0.0	0.0	0.0	1.0	1.0	1.0
48.3200	VOLTMETER R&R	0.0	0.0	0.0	0.0	0.5	0.5	0.5
48.3300	DIRECTIONAL SWITCH R&R	0.0	0.0	0.0	0.0	0.5	0.5	0.5
48.3310	MICROSWITCH R&R	0.0	0.0	0.0	0.0	0.7	0.7	0.7
48.3320	WIRING HARNESS R&R	0.0	0.0	0.0	0.0	0.5	0.5	0.5
48.3330	WIRING HARNESS REPAIR	0.0	0.0	0.0	0.0	1.0	1.0	1.0
48.3990	PANEL MISC.	0.0	0.0	0.0	0.0	0.0	0.0	0.0
48.4000	BATTERY INDICATOR GUAGE R&R	0.0	0.0	0.0	0.0	0.5	0.5	0.5
48.4100	BATTERY INNDICATOR CONTROLLER R&R	0.0	0.0	0.0	0.0	0.6	0.6	0.6
48.7000	LOOSE WIRE/CONNETCIONS	0.0	0.0	0.0	0.0	0.5	0.5	0.5

ELECTRIC/GAS/LPG/DIESEL SIT DOWN TRUCKS

50. OUTER PANEL

PROB.		C/P 30-35	C/P 40-60	C/P 80-100	P 150 155	ET 30-35	E 30-35	E 40-60
CODE	OPERATION DESCRIPTION	TIME	TIME	TIME	TIME	TIME	TIME	TIME
50.1000	BONNET R&R	1.0	1.0	1.0	1.0	0.0	0.0	0.0
50.1100	BATTERY COVER R&R	0.0	0.0	0.0	0.0	1.0	1.0	1.0
50.2000	HOOD DAMPER R&R	0.5	0.5	0.5	0.5	0.0	0.0	0.0
50.2040	HOOD HINGE R&R	0.5	0.5	0.5	0.5	0.5	0.5	0.5
50.2050	HOOD LATCH R&R	0.5	0.5	0.5	0.5	0.5	0.5	0.5
50.2100	SEAT ASSEMBLY R&R	0.5	0.5	0.5	0.5	0.5	0.5	0.5
50.2200	SEAT BACK R&R	0.5	0..5	0.5	0.5	0.5	0.5	0.5
50.2300	SEAT RAIL R&R	0.5	0.5	0.5	0.5	0.6	0.6	0.6
50.2400	DASH PANEL R&R	1.5	1.5	1.5	1.5	1.2	1.5	1.5
50.2450	DASH ASSEMBLY R&R	2.5	2.5	2.5	2.5	2.5	2.5	2.5
50.2500	RADIATOR COVER R&R	0.5	0.5	0.5	0.5	0.0	0.0	0.0
50.3990	OUTER PANEL MISC.	0.0	0.0	0.0	0.0	0.0	0.0	0.0

ELECTRIC/GAS/LPG/DIESEL SIT DOWN TRUCKS

55. ELECTRICAL SYSTEM

PROB.		C/P 30-35	C/P 40-60	C/P 80-100	P 150 155	ET 30-35	E 30-35	E 40-60
CODE	OPERATION DESCRIPTION	TIME	TIME	TIME	TIME	TIME	TIME	TIME
55. 1050	WIRE HARNESS DASH R&R	1.5	1.5	1.5	1.5	1.5	1.5	1.5
55.1100	WIRE HARNESS CHASSIS R&R	1.0	1.0	1.0	1.0	1.0	1.0	1.0
55.1110	WIRE HARNESS BOTH R&R	2.5	2.5	2.5	2.5	2.5	2.5	2.5
55.1111	WIRE HARNESS DISCONNECTED - RECONNECT	0.5	0.5	0.5	0.5	0.5	0.5	0.5
55.1120	REPLACE ONE POWER CABLE	0.0	0.0	0.0	0.0	0.8	0.8	0.8
55.1150	DASH PANEL CIRCUIT BOARD R&R	1.2	1.2	1.2	1.2	1.2	1.2	1.2
55.1200	BATTERY R&R	0.7	0.7	0.7	0.7	0.7	0.7	0.7
55.2000	FUSE BLOCK R&R	0.8	0.8	0.8	0.8	0.8	0.8	0.8
55.2010	DASH CIRCUIT BOARD R&R	1.0	1.0	1.0	1.0	1.0	1.0	1.0
55.2030	BATTERY CONNECTOR R&R	0.0	0.0	0.0	0.0	0.5	0.5	0.5
55.2050	IGNITION SWITCH R&R	0.5	0.5	0.5	0.5	0.5	0.5	0.5
55.2100	LIGHT SWITCH R&R	0.5	0.5	0.5	0.5	0.5	0.5	0.5
55.2150	TURN SIGNAL SWITCH R&R	0.5	0.5	0.5	0.5	0.5	0.5	0.5
55.2160	CONTROL VALVE SWITCH R&R	0.0	0.0	0.0	0.0	1.0	1.0	1.0
55.2160	CONTROL VALVE SWITCH ADJUST	0.0	0.0	0.0	0.0	0.5	0.5	0.5
55.2200	FLASHER R&R	0.5	0.5	0.5	0..5	0.5	0.5	0.5
55.2250	HEAD LAMP ASSEMBLY R&R	0.5	0.5	0.5	0.5	0.5	0.5	0.5
55.2300	TAIL.BLINKER LAMP ASSEMBLY R&R	0.5	0.5	0.5	0.5	0.5	0.5	0.5
55.2350	BRAKE SWITCH R&R	0.5	0.5	0.5	0.5	0.5	0.5	0.5
55.2400	BACKUP LIGHT SWITCH R&R	0.5	0.5	0.5	0.5	0.5	0.5	0.5
55.2450	NETURAL SWITCH R&R	0.8	0.8	0.8	0.8	0.0	0.0	0.0
55.250	HORN ASSEMBLY R&R	0.8	0.8	0.8	0.8	0.8	0.8	0.8
55.2550	FUEL TANK SENDOR R&R	1.0	1.0	1.0	1.0	0.0	0.0	0.0
55.2600	DASH HEATER SIGNAL R&R	0.0	0.5	0.5	0.5	0.0	0.0	0.0
55.2650	SAFETY DISCONNECT R&R (GS/LPS)	0.5	0.5	0.5	05	0.0	0.0	0.0
55.2700	HOUR METER/FUEL/WATER TEMPERATURE GUAGE R&R	1.0	1.0	1.0	1.0	0.7	0.7	0.7
55.2750	TEMPERATURE SENDOR TO GLOW BOX R&r	0.0	1.0	0.0	1.0	0.0	0.0	0.0
55.2850	TRANSMISSION TEMPERATURE SENDER R&R	0.8	0.8	0.8	0.8	0.0	0.0	0.0
55.3060	PARKING BRAKE SWITCH R&R	0.0	0.0	0.0	0.0	0.7	0.7	0.7
55.3100	HORN BUTTON/SPRING/CONTACT R&R	0.5	0.5	0.5	0.5	0.5	0.5	0.5
55.3990	ELECTRICAL MISC.	0.0	0.0	0.0	0.0	0.0	0.0	0.0
55.5100	LOW FUEL WARNING FLOAT SWITCH	0.0	1.0	0.0	1.0	0.0	0.0	0.0
55.5200	LOW FUEL WARNING LIGHT R&R	0.0	0.5	0.0	1.0	0.0	0.0	0.0
55.7000	REPAIR WIRING HARNESS	0.8	0.8	0.8	0.8	0.8	0.8	0.8

ELECTRIC/GAS/LPG/DIESEL SIT DOWN TRUCKS

60. HYDRAULIC PUMP

PROB.		C/P 30-35	C/P 40-60	C/P 80-100	P 150 155	ET 30-35	E 30-35	E 40-60
CODE	OPERATION DESCRIPTION	TIME	TIME	TIME	TIME	TIME	TIME	TIME
60.1000	PUMP ASSEMBLY R+&R	1.5	1.5	2.0	2.0	1.5	1.5	1.5
61.3990	PUMP MISC.	0.0	0.0	0.0	0.0	0.0	0.0	0.0
60.7000	PUMP RESEAL INCL. R&R	2.5	2.5	3.0	3.5	2.5	2.5	2.5
60.7400	GASKET/O-RING/OIL LEAK R&R	1.0	1.0	1.0	1.0	0.0	0.0	0.0

ELECTRIC/GAS/LPG/DIESEL SIT DOWN TRUCKS

61. HYDRAULIC CONTROL VALVE

PROB.		C/P 30-35	C/P 40-60	C/P 80-100	P 150 155	ET 30-35	E 30-35	E 40-60
CODE	OPERATION DESCRIPTION	TIME	TIME	TIME	TIME	TIME	TIME	TIME
61.1100	CONTROL VALVE ASSEMBLY R&R	1.5	1.5	2.0	2.0	1.5	1.5	1.5
61.1200	FLOW DIVIDER/FLOW CONTROL R&R	2.0	2.0	1.0	1.0	1.0	2.0	2.0
61.1250	CONTROL VALVE LEVER R&R	0.6	0.6	0.6	0.6	0.6	0.6	0.6
61.1300	CONTROL VALVE CONTAMINATION	2.5	2.5	2.5	2.5	2.5	2.5	2.5
61.2000	CONTROL VALVE SECTION R&R	2.0	2.0	2.1	2.1	2.0	2.0	2.0
61.2100	RELIEF VALVE ASSEMBLY R&R	0.5	0.5	0.5	0.5	0.5	0.5	0.5
61.3300	CONTROL VALE CLEVIS PIN R&R	0.5	0.5	0.5	0.5	0.5	0.5	0.5
61.3990	CONTROL VALVE MISC.	0.0	0.0	0.0	0.0	0.0	0.0	0.0
61.7100	CONTROL VALVE SECTION RESEAL INCL. R&R	2.0	2.0	2.0	2.0	2.0	2.0	2.0
61.7200	CONTROL VALE SPOOL RESEAL	1.0	1.0	1.0	1.0	1.0	1.0	1.0
61.7300	SET/CHECK HYDRAULIC PRESSURE	0.6	0.6	0.6	0.6	0.6	0.6	0.6
61.7400	FITTING/O-RING/OIL LEAK R&R	0.8	0.8	0.8	0.8	0.8	0.8	0.8

ELECTRIC/GAS/LPG/DIESEL SIT DOWN TRUCKS

62. POWER STEERING PUMP

PROB.		C/P 30-35	C/P 40-60	C/P 80-100	P 150 155	ET 30-35	E 30-35	E 40-60
CODE	OPERATION DESCRIPTION	TIME	TIME	TIME	TIME	TIME	TIME	TIME
62.1000	P/S PUMP ASSEMBLY R&R	0.0	0.0	0.0	0.0	1.5	1.5	1.5
62.3990	P/S PUMP MISC.	0.0	0.0	0.0	0.0	0.0	0.0	0.0
62.7000	P/S PUMP RESEAL INCL. R&R	0.0	0.0	0.0	0.0	2.5	2.5	2.5

ELECTRIC/GAS/LPG/DIESEL SIT DOWN TRUCKS

64. TILT CYLINDER

PROB.		C/P 30-35	C/P 40-60	C/P 80-100	P 150 155	ET 30-35	E 30-35	E 40-60
CODE	OPERATION DESCRIPTION	TIME	TIME	TIME	TIME	TIME	TIME	TIME
64.1000	CYLINDER ASSEMBLY R&R (ONE)	0.8	0.8	0.8	0.8	0.8	0.8	0.8
64.1010	CYLINDER ASSEMBLY R&R (BOTH)	1.2	1.2	1.2	1.2	1.2	1.2	1.2
64.2000	CYLINDER ROD R&R	1.6	1.6	1.6	1.6	1.6	1.6	1.6
64.2100	CYLINDER GLAND HEAD R&R	1.0	1.0	1.0	1.0	1.0	1.0	1.0
64.2200	CYLINDER TUBE R&R	1.4	1.4	1.4	1.4	1.4	1.4	1.4
64.3000	SPACER R&R	0.7	0.7	0.7	0.7	0.7	0.7	0.7
64.3100	ROD END R&R	0.5	0.5	0.5	0.5	0.5	0.5	0.5
64.3200	ROD END BUSHING R&R	0.7	0.7	0.7	0.7	0.7	0.7	0.7
64.3250	FITTING/O-RING/OIL LEAK	0.5	0.5	0.5	0.5	0.5	0.5	0.5
64.3990	CYLINDER MISC.	0.0	0.0	0.0	0.0	0.0	0.0	0.0
64.7000	CYLINDER ASSEMBLY RESEAL INCL. R&R (ONE)	1.3	1.3	1.3	1.3	1.3	1.3	1.3
64.7100	CYLINDER ASSEMBLY RESEAL INCL. R&R (BOTH)	2.3	2.3	2.3	2.3	2.3	2.3	2.3

ELECTRIC/GAS/LPG/DIESEL SIT DOWN TRUCKS

65.POWER STEERING CYLINDER

PROB.		C/P 30-35	C/P 40-60	C/P 80-100	P 150 155	ET 30-35	E 30-35	E 40-60
CODE	OPERATION DESCRIPTION	TIME	TIME	TIME	TIME	TIME	TIME	TIME
65.1000	CYLINDER ASSEMBLE R&R	1.5	1.5	1.5	1.5	1..5	2.0	2.0
65.2000	CYLINDER ROD R&R	1.7	1.7	1.7	1.7	1.7	1.7	1.7
65.2100	CYLINDER GLAND HEAD R&R	1.7	1.7	1.7	1.7	1.7	1.7	1.7
65.3000	FITTING/O-RING R&R	0.8	0.8	0.8	0.8	0.8	0.8	0.8
65.3990	CYLINDER MISC.	0.0	0.0	0.0	0.0	0.0	0.0	0.0
65.7000	CYLINDER RESEAL INCL. R&R	1.9	1.9	1.9	1.9	1.9	1.9	1.9
65.7100	BROKEN OR LOOSE BOLTS REPAIR	0.0	0.0	0.0	0.0	0.0	0.0	0.0

ELECTRIC/GAS/LPG/DIESEL SIT DOWN TRUCKS

66. HYDRAULIC SYSTEM

PROB.		C/P 30-35	C/P 40-60	C/P 80-100	P 150 155	ET 30-35	E 30-35	E 40-60
CODE	OPERATION DESCRIPTION	TIME	TIME	TIME	TIME	TIME	TIME	TIME
66.2000	STRAINER R&R	0.9	0.9	0.9	0.9	0.9	0.9	0.9
66.2100	RETURN FILTER R&R	0.8	0.8	0.8	0.8	0.8	0.8	0.8
66.3000	MAIN HYDRAULIC PIPING R&R	1.0	1.0	1.0	1.0	1.0	1.0	1.0
66.3050	STEERING HOSE R&R	0.9	0.9	0.9	0.9	0.9	0.9	0.9
66.3060	LOOSE HOSE/LEAKING FITTING OR CLAMPS	0.5	0.5	0.5	0.5	0.5	0.5	0.5
66.3100	TILT PIPING R&R	0.8	0.8	0.8	0.8	0.8	0.8	0.8
66.3150	TILT HOSE R&R	0.5	0.5	0.5	0.5	0.5	0.5	0.5
66.3200	POWER STEERING HOSE R&R	0.8	0.8	0.8	0.8	0.8	0.8	0.8
66.3210	POWER STEERING HOSE LEAK	0.5	0.5	0.5	0.5	0.5	0.5	0.5
66.3260	HYDRAULIC HOSE R&R	0.8	0.8	0.8	0.8	0.8	0.8	0.8
66.3400	FITTING/O-RING LEAK R&R	0.8	0.8	0.8	0.8	0.8	0.8	0.8
66.3450	RETURN HOSE (MAST)	0.5	0.5	0.5	0.5	0.5	0.5	0.5
66.3500	SUCTION HOSE R&R	1.2	1.2	1.2	1.2	1.2	1.2	1.2
66.3550	BREATHER R&R	0.5	0.5	0.5	0.5	0.5	0.5	0.5
66.3600	DRAIN PLUG R&R	0.5	0.5	0.5	0.5	0.5	0.5	0.5
66.3990	HYDRAULIC MISC.	0.0	0.0	0.0	0.0	0.0	0.0	0.0
66.6000	CONTAMINATION	1.0	1.0	1.0	1.0	1.0	1.0	1.0
66.7500	PRESSURE TESTING	0.5	0.5.	0.5	0.5	0.5	0.5	0.5

ELECTRIC/GAS/LPG/DIESEL SIT DOWN TRUCKS

72. MAST

PROB.		C/P 30-35	C/P 40-60	C/P 80-100	P 150 155	ET 30-35	E 30-35	E 40-60
CODE	OPERATION DESCRIPTION	TIME	TIME	TIME	TIME	TIME	TIME	TIME
72.1000	MAST ASSEMBLY R&R	1.5	1.5	1.5	1.5	1.5	1.5	1.5
72.1010	FRONT LIFT CYLINDER R&R	1.1	1.1	1.3	1.3	1.1	1.1	1.1
72.1020	REAR CYLINDER R&R	1.5	1.6	2.1	2.1	1.5	1.6	1.5
72.1050	RAIL R&R (2 STAGE)	2.8	2.8	2.9	2.9	2.9	2.8	2.8
72.1100	RAIL R&R (3 STAGE)	3.7	3.7	3.9	3.9	3.9	3.7	3.7
72.2000	HOSE WHEEL R&R	0.5	0.5	0.5	0.5	0.5	0.5	0.5
72.2100	CHAIN WHEEL R&R	0.5	0.5	0.5	0.5	0.5	0.5	0.5
72.2200	CHAIN R&R (ONE)	0.6	0.6	0.6	0.6	0.6	0.6	0.6
72.2250	CHAIN R&R (BOTH)	1.1	1.1	1.1	1.1	1.1	1.1	1.1
72.2300	CARRIAGE R&R	1.0	1.0	1.0	1.0	1.0	1.0	1.0
72.2400	CARRIAGE ROLLERS R&R	1.5	1.5	1.5	1.5	1.5	1.5	1.5
72.2500	CARRIAGE SIDE ROLLERS R&R	0.5	0.5	0.5	0.5	0.5	0.5	0.5
72.2600	CROSS HEAD R&R	1.0	1.0	1.0	1.0	1.0	1.0	1.0
72.3000	WEAR STRIP R&R	2.0	2.0	2.5	2.5	2.5	2.0	2.0
72.3010	DOWN SAFETY VALVE R&R	1.0	1.0	1.0	1.0	1.0	1.0	1.0
72.3050	HOIST CYLINDER FITTING/O-RING IL LEAK	0.8	0.8	0.8	0.8	0.8	0.8	0.8
72.3100	PIPE ASSEMBLY R&R	0.8	0.8	0.8	0.8	0.8	0.8	0.8
72.3400	CUSHION RETURN R&R	0.5	0.5	0.5	0.5	0.5	0.5	0.5
72.3500	BACKREST R&R	0.5	0.5	0.5	0.5	0.5	0.5	0.5
72.3750	RETURN HOSE R&R	0.5	0.5	0.5	0.5	0.5	0.5	0.5
72.3850	TRUNION CAP R&R	0.5	0.5	0.5	0.5	0.5	0.5	0.5
72.3900	TRUNION BUSHING R&R	1.8	1..8	1.8	1.8	1.8	1.8	1.8
72.3990	MAST MISC.	0.0	0.0	0.0	0.0	0.0	0.0	0.0
72.7010	FREELIFT CYLINDER RESEAL INCL. R&R (ONE)	2.0	2.0	2.2	2.2	2.0	2.0	2.0
72.7040	FREELIFT CYLINDER RESEAL INCL. R&R (BOTH)	3.5	3.5	3.5	3.5	3.5	3.5	3.5
72.7050	REAR CYLINDER RESEAL	2.5	2.5	2.7	2.7	2.5	2.5	2.5
72.7100	SIDE ROLLER ADJUST	0.5	0.5	0.5	0.5	0.5	0.5	0.5
72.7150	CYLINDER GLAND HEAD RESEAL	1.3	1.3	1.3	1.3	1.3	1.3	1.3

ELECTRIC/GAS/LPG/DIESEL SIT DOWN TRUCKS

93. FORKS

PROB.		C/P 30-35	C/P 40-60	C/P 80-100	P 150 155	ET 30-35	E 30-35	E 40-60
CODE	OPERATION DESCRIPTION	TIME	TIME	TIME	TIME	TIME	TIME	TIME
93.3600	FORKS R&R (BOTH)	0.5	0.5	0.5	0.5	0.5	0.5	0.5
93.3700	FORK PIN R&R	0.5	0.5	0.5	0.5	0.5	0.5	0.5
93.3990	FORK MISC.	0.0	0.0	0.0	0.0	0.0	0.0	0.0

ELECTRIC/GAS/LPG/DIESEL SIT DOWN TRUCKS

94. ATTACHMENTS

PROB.		C/P 30-35	C/P 40-60	C/P 80-100	P 150 155	ET 30-35	E 30-35	E 40-60
CODE	OPERATION DESCRIPTION	TIME	TIME	TIME	TIME	TIME	TIME	TIME
94.3990	FORK MISC.	0.0	0.0	0.0	0.0	0.0	0.0	0.0
94.4000	SIDESHIFTE HOSE R&R	0.5	0.5	0.5	0.5	0.5	0.5	0.5
94.4010	INTERNAL HOSE TAKE UP GUIDE ROLLERS R&R	0.5	0.5	0.5	0.5	0.5	0.5	0.5

Kalmar AC

Kalmar AC, Inc.
14481 Lochridge Blvd., Bldg 2
Covington, Georgia 30014

REPAIR TIME SCHEDULE
Internal Combustion

This repair labor guide pertains to Liftking straight mast Forklift trucks.
The number of labor hours assigned to each job is a multiplying factor for your warranty labor rate. The number of hours shown is the average length of time taken by Liftking servicemen. Many of these times have been verified and/or influenced by many dealer servicemen. If your time to complete a task varies significantly from the specified time, report the variance separately and describe the circumstances which may have caused the variance
The time allowed to complete a job includes normal troubleshooting and testing procedures. Tasks which are incidental to a service job should be considered to be included in the main job even if the incidental task is not specifically listed.

DESCRIPTION	M Series	P Series	K Series	TMF
Mast and Carriage	All times are divided into tenths of an hour Example 0.1 = 6 minutes			
Forks Without Fork Positioners R & R	0.4	0.4	1.0	0.3
Forks With Fork Positioners R & R	1.0	1.0	1.5	N/A
Carriage Assembly R & R Without Fork Positioners	0.3	0.3	0.7	0.3
Carriage Assembly R & R With Fork Positioners	0.6	0.6	1.4	N/A
Carriage Bearings (4) R & R	0.5	0.5	1.5	0.5
Carriage Thrust Bearings (2) R & R	0.5	0.5	1.3	0.4
Fork Positioning Chain R & R	0.5	0.5	0.5	N/A
Fork Positioning Sprocket	0.5	0.5	0.5	N/A
Mast Assembly 2 Stage R & R	1.0	1.0	2.0	1.0
Mast Assembly 3 Stage R & R	1.0	1.0	2.0	N/A
Mast Chain R & R each	0.5	0.5	0.7	0.5
Mast Chain Roller R & R each	1.0	1.0	1.0	0.5
Chain Bolt R & R each	0.5	0.5	0.7	0.5
Chain Adjustment	0.5	0.5	0.5	0.5
Mast Bearings (4) 2 Stage R & R	2.0	2.0	2.5	2.0
Mast Bearings (8) 3 Stage R & R	4.0	4.0	4.0	N/A
Hose Reel R & R	1.0	1.0	1.0	N/A
Lift Cylinder 2 Stage Single Cylinder R & R	1.0	1.0	1.0	0.5
Lift Cylinder 2 Stage Clearview R & R each	0.5	0.5	0.5	N/A
Lift Cylinder 3 Stage Single Cylinder R & R	0.5	0.5	0.5	N/A
Lift Cylinder 3 Stage Clearview R & R each	1.5	1.5	3.0	N/A
Free Lift Cylinder R & R	1.0	1.0	2.0	N/A
Tilt Cylinder R & R each	1.0	1.0	1.5	0.5
Side Shift Cylinder R & R	0.5	0.5	0.5	0.5
Fork Positioning Cylinder R & R each	0.5	0.5	0.5	N/A
Note all engine Warranty repair must be completed by an authorized dealer of the EngineOEM				
Engine				
Engine Assembly R & R Perkins	8.0	6.5	6.5	6.0
Engine Assembly R & R Cummins	8.0	6.5	6.5	N/A
Engine Mounting Rubber change (both sides)	1.5	1.5	1.5	1.5
Air Induction and Exhaust System				
Air Cleaner Assembly R & R	0.5	0.5	0.5	0.5
Air Intake Pipe with Elbows	0.3	0.3	0.3	0.3
Tailpipe on Engine Cover R & R	0.3	0.3	0.3	0.3
Muffler Assembly R & R	0.3	0.3	0.3	0.3

DESCRIPTION	M Series	P Series	K Series	TMF
Fuel System	All times are divided into tenths of an hour Example 0.1 = 6 minutes			
Fuel Tank Assembly R & R	1.5	1.5	1.5	1.5
Fuel Tank Cap and Strainer R & R	0.2	0.2	0.2	0.2
Fuel Hose Tank to Water Separator R & R	0.3	0.3	0.3	0.3
Fuel Hose Water Separator to Fuel Feed Pump	0.3	0.3	0.3	0.3
Fuel Feed Pump R & R	0.4	0.4	0.4	0.4
Water Separator Assembly R & R	0.3	0.3	0.3	0.3
Fuel Filter Assembly	0.4	0.4	0.4	0.4
Accelerator Cable Assembly R & R	0.5	0.5	0.5	0.5
Accelerator Pedal Assembly R & R	0.5	0.5	0.5	0.5
Engine Shut-off Solenoid	0.3	0.3	0.3	0.3
Cooling System				
Radiator Assembly R & R including: Engine Hood R & R, Refilling with coolant, and Shroud R & R	2.0	2.0	2.0	2.0
Radiator pressure test	0.5	0.5	0.5	0.5
Pressure Cap change	0.1	0.1	0.1	0.1
Radiator Lower (outlet) Hose change	0.5	0.5	0.5	0.5
Radiator Upper (inlet) Hose change	0.3	0.3	0.3	0.3
Bypass Hose change	0.4	0.4	0.4	0.4
Thermostat change. Including refilling with coolant	0.5	0.5	0.5	0.5
Fan R & R or change	0.5	0.5	0.5	0.5
Fan Belt change	0.3	0.3	0.3	0.3
Radiator Shroud change	0.3	0.3	0.3	0.3
Heater Hose change Including refilling with coolant	1.0	1.0	1.0	1.0
Transmission Cooler R & R Including oil refill	0.8	0.8	0.8	0.8
Electrical System				
Positive Battery Cable R & R	0.2	0.2	0.2	0.2
Negative Battery Cable R & R	0.2	0.2	0.2	0.2
Battery dismounting/mounting R & R	0.3	0.3	0.3	0.3
Starter Motor R & R	0.5	0.5	0.5	0.5
Alternator R & R	0.5	0.5	0.5	0.5
Key/Switch (Ignition Switch) change	1.0	1.0	1.0	1.0
Brake Stop Light Switch change	0.2	0.2	0.2	0.2
Headlamp Switch change	0.2	0.2	0.2	0.2
Battery Disconnect Switch change	0.2	0.2	0.2	0.2
Headlamp Assembly Lens/Bulb change (each side)	0.2	0.2	0.2	0.2
Rear Working Lamp Assembly Lens/Bulb change	0.2	0.2	0.2	0.2
Front Turn Signal or Combination Lamp Assembly Lens/Bulb change (each side)	0.2	0.2	0.2	0.2
Rear Turn Signal Lamp Assembly Lens/Bulb change (each side)	0.2	0.2	0.2	0.2
Tail/Stop or Rear Combination Lamp Assembly Lens/Bulb change (each side)	0.2	0.2	0.2	0.2
Wire Harness change - on chassis	1.0	1.0	1.0	1.0

DESCRIPTION	M Series	P Series	K Series	TMF
Protection Devices	All times are divided into tenths of an hour Example 0.1 = 6 minutes			
Horn Assembly change	0.2	0.2	0.2	0.2
Horn Button Assembly change	1.0	1.0	1.0	0.3
Turn Signal/Hazard Flasher Unit change	0.2	0.2	0.2	0.2
Turn Signal Switch	1.0	1.0	1.0	N/A
Rotating Light Assembly change	0.5	0.5	0.5	N/A
Rotating Light Switch	1.0	1.0	1.0	N/A
Back-Up Alarm change	0.2	0.2	0.2	N/A
Back-Up Alarm Switch change	1.0	1.0	1.0	N/A
Neutral Safety Switch change	1.0	1.0	1.0	N/A
Gauges and Indicators				
Instrument Panel Assembly change	0.3	0.3	0.3	N/A
Oil Pressure Gauge change (Panel Assembly)	0.3	0.3	0.3	0.2
Oil Pressure Warning Lamp change (Panel Assembly)	0.3	0.3	0.3	0.2
Transmission Oil Temperature Warning Lamp change (Panel Assembly)	0.3	0.3	0.3	N/A
Alternator Warning Lamp (Panel Assembly)	0.3	0.3	0.3	0.2
Water Temperature Warning Light change(Panel Assembly)	0.3	0.3	0.3	0.2
Fuel Gauge Unit change (Panel Assembly)	0.3	0.3	0.3	0.3
Hour Meter change (Panel Assembly)	0.3	0.3	0.3	0.3
Air Pressure Gauge change	0.3	0.3	0.3	N/A
Sending Units (Water, Oil) R & R	0.3	0.3	0.3	0.2
Fuel Sending Unit R & R	0.3	0.3	0.3	0.3
Air Cleaner Indicator change	0.2	0.2	0.2	N/A
Vehicle Body and Cab				
Engine Hood R & R	0.4	0.4	0.4	0.4
Engine Hood Gas Spring change	0.3	0.3	0.3	0.3
Floor Plate R & R	0.5	0.3	0.3	N/A
Front Cover R & R	0.3	N/A	N/A	0.3
Drivers Seat R & R	0.5	0.5	0.5	0.5
Cab Heater Unit R & R	1.5	1.5	1.5	N/A
Rear-view Mirror Assembly R & R	0.3	0.3	0.3	0.3
Rear View Mirror Head R & R	0.2	0.2	0.2	0.2
Dome Lamp Assembly/Lens/Bulb change	0.3	0.3	0.3	N/A
Cab/Dome Lamp Switch R & R	0.3	0.3	0.3	N/A
Front Windshield Wiper Motor assembly R & R	1.0	1.0	1.0	N/A
Front Windshield Wiper Switch R & R	0.3	0.3	0.3	N/A
Rear Windshield Wiper Motor assembly R & R	1.0	1.0	1.0	N/A
Rear Windshield Wiper Switch R & R	0.3	0.3	0.3	N/A
Windshield Washer Pump/Motor Assembly R & R	0.5	0.5	0.5	N/A
Windshield Washer Tank change	0.3	0.3	0.3	N/A
Windshield Washer Switch change	0.3	0.3	0.3	N/A

DESCRIPTION	M Series	P Series	K Series	TMF
Torque Converter/Transmission	All times are divided into tenths of an hour Example 0.1 = 6 minutes			
Transmission Assy R & R	5.0	4.0	4.0	N/A
Torque Converter R & R	5.5	4.5	4.5	N/A
Drive Plate R & R	5.5	4.5	4.5	N/A
Flywheel R & R	6.0	5.0	5.0	N/A
Complete rebuild 2WD	11.25	N/A	12.5	N/A
Complete rebuild 4WD	13.25	14.0	N/A	N/A
Drain and Refill Transmission including filter change	0.75	1.0	1.0	N/A
Charge Pump and Seals R & R	4.25	N/A	N/A	N/A
Dipstick and tube R & R	0.5	0.2	0.2	N/A
Pressure regulated valve and charging pump R & R	N/A	1.5	1.5	N/A
Converter relief valve R & R plus pressure test	1.0	N/A	N/A	N/A
Control Valve Assembly R & R	N/A	1.5	1.5	N/A
F & R solenoid and reseal	1.0	N/A	N/A	N/A
Pressure Maintenance Valve Assy. R & R	1.0	N/A	N/A	N/A
Pressure Maintenance Valve clean	0.5	N/A	N/A	N/A
Hose Transmission to cooler R & R	1.0	1.0	1.0	N/A
Hose Cooler to Transmission	1.0	1.0	1.0	N/A
Transmission Rubber Mounts R & R	1.0	1.0	1.0	N/A
Transmission Oil Pressure Test	1.0	1.0	1.0	N/A
Rear oil seal R & R	1.0	1.0	1.0	N/A
Gear lever assy and gasket R & R	1.5	N/A	N/A	N/A
4WD Solenoid R & R	.75	N/A	N/A	N/A
4WD Hyd Clutch Rebiuld	3.5	N/A	N/A	N/A
4WD selector seal	.5	N/A	N/A	N/A
Stall Test RPM Measurement	.5	.5	.5	N/A
Wheels and Tires				
Front Wheel Assembly R & R (each)	0.5	0.5	1.0	0.5
Front Tire change (each side), including Front Wheel Assembly R & R	1.0	1.0	1.5	1.0
Rear Wheel Assembly R & R (each)	0.5	0.5	0.5	0.5
Rear Tire change (each side), including Rear Wheel Assembly R & R	1.0	1.0	1.0	1.0
Wheel Studs R & R (1 pc.)	0.3	0.3	0.3	0.3
Wheel Nut retightening (all wheels)	0.4	0.4	0.4	0.3
Front Drive Axle and Drive Line (Non Steering)				
Front Drive Axle R & R	4.0	N/A	6.0	N/A
Front Drive Shaft Assembly R & R	0.5	N/A	0.5	N/A
Drive Shaft Universal Joint R & R each	0.3	N/A	0.3	N/A
Front Drive Axle Overhaul including R & R	12.5	N/A	16.5	N/A
Drain and Refill	0.5	N/A	0.5	N/A
Pinion oil seal R & R	1.0	N/A	1.0	N/A
Planetary Gear Assembly R & R (each side), including: Wheel Assembly	1.5	N/A	2.5	N/A
Axle Shaft R & R (each side)	1.8	N/A	2.0	N/A
Wheel Hub R & R (each side) including Bearings, Seals	3.0	N/A	3.5	N/A
Differential Assy. R & R	7.0	N/A	8.0	N/A

DESCRIPTION	M Series	P Series	K Series	TMF
Rear Steer Axle (Non Driving)	All times are divided into tenths of an hour Example 0.1 = 6 minutes			
Steer Axle R & R including wheels	2.5	N/A	3.0	N/A
Tie Rod Assembly R & R	0.5	N/A	0.5	N/A
King Pin R & R	1.5	N/A	2.0	N/A
Steer Cylinder R & R	1.0	N/A	1.0	N/A
Center Bushing and Pin R & R	3.0	N/A	3.5	N/A
Front or Rear Steer Axle and Drive Line				
Steer Axle R & R	3.0	4.0	N/A	N/A
Drive Shaft Assembly R & R	0.5	0.5	N/A	N/A
Drive Shaft Universal Joint R & R each	0.3	0.3	N/A	N/A
Pinion oil seal R & R	1.0	1.0	N/A	N/A
Planetary Gear Assembly R & R (each side), including: Wheel Assembly	1.5	2.5	N/A	N/A
Wheel Hub R & R (each side) including Bearings, Seals	3.0	3.0	N/A	N/A
Axle Shaft R & R (each side)	1.8	2.0	N/A	N/A
Tie Rod Assembly R & R	1.0	1.0	N/A	N/A
Tie Rod End R & R	0.5	0.5	N/A	N/A
Braking System				
Front Axle Brake overhaul (each side)	2.5	3.0	3.5	N/A
Rear Axle Brake overhaul (each side)	N/A	3.0	N/A	N/A
Master Cylinder Assembly R & R, including bleeding	0.6	N/A	N/A	N/A
Master Cylinder Assembly overhaul, excl. R & R	0.5	N/A	N/A	N/A
Pedal R & R	0.5	N/A	N/A	N/A
Pedal play adjustment	0.2	N/A	N/A	N/A
Brake Pedal Control Valve Assembly R & R	N/A	0.6	0.6	N/A
Steering System				
Steering Wheel change	0.3	0.3	0.3	0.3
Steering Column R & R	1.0	1.0	1.0	1.0
Orbitrol Control Valve Assembly R & R	2.0	2.0	2.0	2.0
Steering Cylinder Assembly R & R (1 pc.)	1.0	1.0	2.0	N/A
Steering Cylinder Assembly overhaul (1 pc.), excl. R & R	1.5	1.5	2.0	N/A
Steering Actuator	N/A	N/A	N/A	2.5

DESCRIPTION	M Series	P Series	K Series	TMF
Hydraulic System) All times are divided into tenths of an hour Example 0.1 = 6 minutes				
Hydraulic Pump (main) Assembly R & R	1.0	1.0	1.0	1.0
Control Valve Assembly R & R – 3 Block Control Valve	1.6	1.6	1.6	N/A
Control Valve Assembly R & R – 4 Block Control Valve	1.7	1.7	1.7	1.7
Control Valve Assembly R & R – 5 Block Control Valve	1.8	1.8	1.8	N/A
Control Valve Assembly overhaul – 3 Block Control Valve, excl. R & R	1.0	1.0	1.0	N/A
Control Valve Assembly overhaul – 4 Block Control Valve, excl. R & R	1.1	1.1	1.1	1.1
Control Valve Assembly overhaul – 5 Block Control Valve, excl. R & R	1.2	1.2	1.2	N/A
Main Relief Valve Assembly R & R incl. Oil Pressure adjustment	0.8	0.8	0.8	0.8
Hydraulic Tank Filler Cap change	0.3	0.3	0.3	0.3
Hydraulic Tank Suction Strainer cleaning or change, including: Hydraulic Tank Cover R & R or change	1.0	1.0	1.0	1.0
Hydraulic Oil change, including: Oil Screen cleaning or change and Return Filter Element change	1.5	1.5	1.5	1.5
Suction Hose change – between tank and pump	0.3	0.3	0.3	0.3
Return Hose change – between control valve, filter and tank (2 pc)	0.5	0.5	0.5	0.5
Hose Reel R & R	1.0	1.0	1.0	N/A
Hydraulic Manifold R & R	N/A	N/A	N/A	2.0
Hydraulic Motors R & R	N/A	N/A	N/A	2.5
Hydraulic Cylinders				
Lift Cylinder Overhaul	2.5	3.0	3.0	2.5
Free Lift Cylinder Overhaul	3.0	N/A	N/A	N/A
Tilt Cylinder Overhaul	1.5	1.5	2.0	1.5
Sideshift Cylinder Overhaul	1.0	1.0	1.0	1.0
Fork Positioning Cylinder Overhaul	1.0	1.0	1.0	N/A
Oscillation Cylinder Overhaul	1.0	1.0	1.0	1.0
Extension Cylinder R & R	N/A	N/A	N/A	1.0
Extension Cylinder Overhaul	N/A	N/A	N/A	1.0
Outrigger Cylinder R & R	N/A	N/A	N/A	1.0
Outrigger Cylinder Overhaul	N/A	N/A	N/A	1.0

This page left intentionally blank

(Insert Classification of TMDER Here) CLASSIFICATION

NAVSUP TECHNICAL MANUAL DEFICIENCY/EVALUATION REPORT (TMDER)			
INSTRUCTION: Continue on 8 1/2" x 11" paper if additional space is needed.			
1. USE THIS REPORT TO INDICATE DEFICIENCIES, PROBLEMS, AND RECOMMENDATIONS RELATION TO PUBLICATIONS. 2. FOR CLASSIFIED TMDERS, SEE OPNAVINST 5510H FOR MAILING CLASSIFIED TMDERS.			
1. PUB NO. **NAVSUP PUB 538**	2. VOL/PART	3. REV. NO./DATE OR TM CH. NO./DATE **First Revision, 15 November 2002**	4. SYSTEM/EQUIPMENT IDENTIFICATION
5. TITLE **Management of Materials Handling Equipment (MHE)**			6. REPORT CONTROL NUMBER

7. RECOMMENDED CHANGES TO PUBLICATION		
PAGE NO. A	PARA-GRAPH B	C. RECOMMENDED CHANGES AND REASONS

8. ORIGINATOR'S NAME AND WORK CENTER (Please Print)	9. DATE	10. DSN/COMM NO.	11. TRANSMITTED TO
12. SHIP HULL NO. AND/OR STATION ADDRESS (Do Not Abbreviate)			

NAVSEA 4160/1 (REV 8-95)(Destroy Old Stock)

PLEASE CLOSE WITH TAPE - DO NOT STAPLE - THANK YOU

FOLD HERE

DEPARTMENT OF THE NAVY

==========

Official Business

COMMANDER
NAVAL INVENTORY CONTROL POINT
ATTN: CODE 058133
5450 CARLISLE PIKE
P.O. BOX 2020
MECHANICSBURG, PA 17055-0788

FOLD HERE

To begin, place your cursor in the "**Issuing Activity's Name**" field. Then "tab" to complete other fields. After completing the information, print this page, cut at the dashed lines, and sign (as appropriate). Fold in half vertically down the dotted line in the middle, then fold across (above date issued/date expires/licensed to operate). If possible, laminate each license prior to issue.

Reset All License Fields

Operating Notes.
1. Use "**Space Bar**" or **"Mouse"** to mark boxes.
2. Type all dates as follows (with no Slashes): Example - For July 1, 1962, enter "1 July 1962".

FOLD HERE

MHE OPERATOR'S LICENSE

Issuing Activity's Name

Operator's Name | Sex

Date of Birth | Local Card Number

Height | Weight | Hair | Eyes

Physical Limitations *(e.g., requires corrective lenses, requires hearing aid, etc.)*

Other Local Requirements

Date Issued | Date Expires

LICENSED TO OPERATE

General Supply Authorized YES ☐

Explosives Authorized YES ☐

Issuing Authority's Signature

Operator's Signature

Medical Certificate:

On File ☐ On Person ☐

Class/ Lift Code	SWL	Type Designations

FOLD HERE

*The MHE Operator's License shall serve as the **Official License** for the purpose of handling general supplies with industrial Navy MHE at U.S. Navy Activities.*

Class	Lift Code	Description
1	1	Electric, Counterbalanced Rider-Type, Stand Up
	4	Three Wheel Electric Truck, Sit Down
	5	Electric, Counterbalanced Rider, Solid Tires, Sit Down
	6	Electric, Counterbalanced Rider, Pneumatic Tires, Sit Down
2	1	High Lift Straddle
	2	Order Picker
	3	Reach Type Outrigger (e.g., Reaching and Tiering)
	4	Sideloader, Turret Trucks, Swingmast and Convertible Turret/Stock Pickers
	6	Low Lift, Electric Pallet and Platform Truck (Rider)
3	1	Low Lift, Electric Walkie Platform Truck
	2	Low Lift, Electric Walkie Pallet Truck
4	3	Internal Combustion, Counterbalanced Forklift Truck (Solid Tires)
5	4	Internal Combustion, Counterbalanced Forklift Truck (Pneumatic Tires)
6	1	Electric and Internal Combusion, Sit Down Rider Tractor (Solid and Pneumatic Tires)
7	1	Rough Terrain Forklift Truck (Pneumatic Tires)

FOLD HERE

MHE OPERATOR'S LICENSE

Issuing Activity's Name

Operator's Name | Sex

Date of Birth | Local Card Number

Height | Weight | Hair | Eyes

Physical Limitations *(e.g., requires corrective lenses, requires hearing aid, etc.)*

Other Local Requirements

Date Issued | Date Expires

LICENSED TO OPERATE

General Supply Authorized YES ☐

Explosives Authorized YES ☐

Issuing Authority's Signature

Operator's Signature

Medical Certificate:

On File ☐ On Person ☐

Class/ Lift Code	SWL	Type Designations

FOLD HERE

*The MHE Operator's License shall serve as the **Official License** for the purpose of handling general supplies with industrial Navy MHE at U.S. Navy Activities.*

Class	Lift Code	Description
1	1	Electric, Counterbalanced Rider-Type, Stand Up
	4	Three Wheel Electric Truck, Sit Down
	5	Electric, Counterbalanced Rider, Solid Tires, Sit Down
	6	Electric, Counterbalanced Rider, Pneumatic Tires, Sit Down
2	1	High Lift Straddle
	2	Order Picker
	3	Reach Type Outrigger (e.g., Reaching and Tiering)
	4	Sideloader, Turret Trucks, Swingmast and Convertible Turret/Stock Pickers
	6	Low Lift, Electric Pallet and Platform Truck (Rider)
3	1	Low Lift, Electric Walkie Platform Truck
	2	Low Lift, Electric Walkie Pallet Truck
4	3	Internal Combustion, Counterbalanced Forklift Truck (Solid Tires)
5	4	Internal Combustion, Counterbalanced Forklift Truck (Pneumatic Tires)
6	1	Electric and Internal Combusion, Sit Down Rider Tractor (Solid and Pneumatic Tires)
7	1	Rough Terrain Forklift Truck (Pneumatic Tires)

Adobe Reader doesn't allow to save completed licenses. Please print a copy of all completed licenses to issue and maintain in appropriate files.