PACIFIC BEACH ANNEX
NAVAL STATION EVERETT
PACIFIC BEACH, WASHINGTON

INTEGRATED NATURAL RESOURCES MANAGEMENT PLAN

2016

Acknowledgements

This document was prepared by Linda Wagoner, Natural Resources Manager, Naval Station Everett with assistance from Jackie Queen, Installation Environmental Program Director; Jennifer Sullivan, Cultural Resources Manager; and Jim Thompson, Environmental Protection Specialist, all of Naval Station Everett. Assistance was also provided by Cindi Kunz, Senior Natural Resources Specialist at NAVFAC Northwest, and by staff from Commander, Navy Region Northwest. Also, Commander, Navy Installations Command (CNIC) and NAVFAC Headquarters staff reviewed this document and provided input to improve it, as did NAVFAC Northwest and CNIC Northwest legal staff. Technical review was provided Mr. Jim Muck, Fish & Wildlife Biologist, U.S. Fish and Wildlife Service; and Mr. Anthony, Novak District Wildlife Biologist, Washington Department of Fish and Wildlife.

This page intentionally left blank

Commander, Navy Region Northwest

Signature Page

This Integrated Natural Resources Management Plan meets the requirements of the Sikes Act (16 U.S.C. 670a et. seq., as amended); Department of Defense Instruction 4715.3 *Environmental Conservation Program*; and OPNAV M-5090.1 *Environmental Readiness Program Manual*.

Approved by:

_____ _____

J. S. RUTH Date
Rear Admiral, U.S. Navy
Commander, Navy Region Northwest

This page intentionally left blank

Commanding Officer

Signature Page

This Integrated Natural Resources Management Plan meets the requirements of the Sikes Act (16 U.S.C. 670a et. seq., as amended); Department of Defense Instruction 4715.3 *Environmental Conservation Program*; and OPNAV M-5090.1 *Environmental Readiness Program Manual*.

Approved by:

_____ _____

MARK A. LAKAMP Date
Captain, U.S. Navy
Commanding Officer, Naval Station Everett

This page intentionally left blank

Washington Department of Fish and Wildlife

Signature Page

This Integrated Natural Resources Management Plan meets the requirements of the Sikes Act (16 U.S.C. 670a et. seq., as amended) and supports Washington Department of Fish and Wildlife policies, management goals and objectives.

Approved by:

_____ _____

MICHELE CULVER Date
Regional Director
WDFW Region 6

This page intentionally left blank

U.S. Fish and Wildlife Service

Signature Page

This Integrated Natural Resources Management Plan meets the requirements of the Sikes Act (16 U.S.C. 670a et. seq., as amended) and supports U.S. Fish and Wildlife policies, management goals and objectives.

Approved by:

_____ _____

ERIC V. RICKERSON Date
State Supervisor, Washington Fish & Wildlife Office
U.S. Fish & Wildlife Service

This page intentionally left blank

Natural Resources Staff

Signature Page

This Integrated Natural Resources Management Plan meets the requirements of the Sikes Act (16 U.S.C. 670a et. seq., as amended); Department of Defense Instruction 4715.3 *Environmental Conservation Program*; and OPNAV M-5090.1 *Environmental Readiness Program Manual*.

Approved by:

_____ _____

CYNTHIA KUNZ Date
Sr. Natural Resources Specialist
NACFAC NW

Approved by:

_____ _____

LINDA WAGONER Date
Natural Resources Manager
Naval Station Everett

This page intentionally left blank

Changes and updates recorded here will be compiled and included each year in Annex 1-5 as part of the annual review (see Section 1.9).

DATE	SECTION/PAGE	CHANGE/MODIFICATION	RATIONALE

This page intentionally left blank

Executive Summary

This Integrated Natural Resources Management Plan (INRMP) is a revision of the Natural Resources Management Plan, Naval Station Puget Sound, Pacific Beach Annex dated 1991. The Pacific Beach installation encompasses about 52 acres on the Pacific Coast of Western Washington (Figure ES1) and is within the Area of Responsibility (AOR) of Naval Station Everett (NSE). This INRMP was developed separately from the NSE INRMP, as a stand-alone document to guide natural resources management specifically at the Pacific Beach location. Presently the military mission at Pacific Beach consists of establishing and operating a fixed emitter integral to an Electronic Warfare Tactical Training Range used by Pacific Fleet assets for training. Non-mission related recreational activities also occur at Pacific Beach.

Consistent with OPNAV M-5090.1, the Navy's Environmental Readiness Program Manual (2014), this INRMP focuses to the maximum extent practicable on ecosystem-based management and the interrelationships between individual components of natural resources conservation (e.g., migratory bird management, land management, outdoor recreation) and mission requirements and recreational uses of the Pacific Beach property. The primary purpose of this INRMP is to ensure that natural resources management and military operations occurring on the installation are integrated and carried out consistent with environmental stewardship, laws and regulations. This will ensure that installation lands are available to support the military mission with no net loss in capabilities, and that lands are maintained in good condition to do so.

This INRMP was prepared in cooperation with the U.S. Fish and Wildlife Service (USFWS) and the Washington Department of Fish and Wildlife (WDFW), as required and authorized by the Conservation Programs on Military Installations (Sikes Act), as amended; Public Law 86-797, 16 United States Code (USC) § 670(a) et seq. This INRMP will be implemented when it is approved by all cooperators. It will be reviewed annually for relevance and effectiveness and updates will be appended to this document. Changes in the military mission, training activities, or technology at Pacific Beach will be analyzed to assess their impact on natural resources, and the INRMP modified as needed to ensure continued natural resource conservation while supporting military activities. A review for operation and effect will be completed and documented with the cooperators at least every five years.

This INRMP is a significant revision of the previous version and thus requires an analysis under the National Environmental Policy Act (NEPA). The NEPA analysis, in the form of an environmental assessment (EA), will be conducted to analyze the effects on the human environment of implementing this revised INRMP, and will document a decision of whether to formally adopt the INRMP. The INRMP and the NEPA document will be made available for public review and comment. The NEPA analysis will be included as Appendix B of this INRMP when completed.

This INRMP is organized according to Department of the Navy guidance issued in April 2006 and was developed consistent with guidance in OPNAV M-5090.1. Also, the Department of Defense 4715.03 INRMP implementation manual (2013) provides procedures to prepare, review, update and implement INRMPs and was used in preparing this document.

Actions contemplated in this INRMP are subject to the availability of appropriated funds, and no provision herein shall be interpreted to require obligation or payment of funds in violation of the Anti-Deficiency Act, 31 U.S.C. §1341.

Figure ES1. The Pacific Beach Annex encompasses about 52 acres.

This page intentionally left blank

Table of Contents

See the Pacific Beach INRMP crosswalk to the Department of Defense template following this Table of Contents

1. Overview 1
1.1 Purpose 1
1.2 Scope 1
1.3 Goals and Objectives 3
1.3.1 General INRMP Goals 3
1.3.2 INRMP Objectives 3
1.4 Responsibilities 4
1.4.1 Installation Commanding Officer 4
1.4.2 Regional Commander 4
1.4.3 Commander, Naval Facilities Engineering Command (NAVFAC) 5
1.4.4 Commander, Navy Installations Command 6
1.4.5 Chief of Naval Operations, Environmental Readiness Division 6
1.4.6 Natural Resources Manager 6
1.4.7 Public Affairs Officer 7
1.4.8 Morale, Welfare and Recreation 7
1.4.9 Other Mission-Related Navy Personnel 7
1.4.10 Other Internal Stakeholders 8
1.5 External Stakeholders 8
1.5.1 U.S. Fish and Wildlife Service 8
1.5.2 Washington Department of Fish and Wildlife 9
1.5.3 Native American Tribes 10
1.6 Authority 10
1.7 Military Mission 12
1.8 Stewardship and Compliance 17
1.9 Review and Revision Process 17
1.9.1 Annual INRMP Review and Conservation Metrics 18
1.9.2 Review for Operation and Effect 19
1.10 Management Strategy 19

1.11 Integration with other Plans 20
1.11.1 Installation Integrated Cultural Resources Management Plan 20
1.11.2 Integrated Pest Management Plan 20
1.11.3 Encroachment Action Plan 21
1.11.4 Strategic Plan for Amphibian and Reptile Conservation and Management on Department of Defense Lands 21
1.11.5 Partners in Flight (PIF) Strategic Plan for Bird Conservation and Management on Department of Defense Lands 21
1.11.6 National Environmental Policy Act Compliance 22
1.11.7 Northwest Training Range Complex EIS and EA 23
1.11.8 Keyport Range Complex EIS 23
1.11.9 Northwest Training and Testing Final EIS/OEIS 23
2. Current Conditions and Use 24
2.1 Installation Information 24
2.1.1 General Description 24
2.1.2 Regional Land Uses 26
2.1.3 Abbreviated History and Pre-Military Land Use 27
2.1.4 Non-Military Operations 30
2.1.5 Operations and Activities 30
2.1.6 Natural Resources Constraints 34
2.1.7 Natural Resources Opportunities 34
2.2 General Physical Environment 35
2.2.1 Climate/Weather 35
2.2.2 Climate Change 36
2.2.3 Geology 37
2.2.4 Hydrology 38
2.3 General Biotic Environment 38
2.3.1 Threatened and Endangered Species and Species of Concern. 39
2.3.2 Wetlands 41
2.3.3 Fauna; Other Fish and Wildlife Species 42
2.3.4 Vegetation 42

3. Environmental Management Strategy and Mission Sustainability 45
3.1 Cooperative Management 45
3.2 Supporting Sustainability of the Mission and the Natural Environment 45
3.3 Natural Resources Consultation Requirements 45
3.4 NEPA Compliance 46
3.5 Beneficial Partnerships and Collaborative Resource Planning 47
3.6 Public Access and Outreach 48
3.7 Encroachment Partnering 49
4. Natural Resource Management 50
4.1 Threatened and Endangered Species, Critical Habitat, and Species of Concern 50
4.1.1 Marbled Murrelet 50
4.1.2 Snowy Plover 54
4.1.3 Streaked horned lark 56
4.1.4 Bull Trout and designated critical habitat 58
4.2 Wetlands Management 60
4.3 Law Enforcement of Natural Resource Laws and Regulations 60
4.4 Fish and Wildlife Management 60
4.4.1 State Comprehensive Wildlife Plans/State Wildlife Action Plans 60
4.4.2 Pollinators 61
4.5 Forestry Management 61
4.6 Vegetation Management 61
4.7 Migratory Birds Management 63
4.7.1 Bald and Golden Eagle Protection Act 64
4.8 Invasive Species Management 66
4.9 Pest Management 66
4.10 Land Management (erosion) 67
4.11 Agricultural Outleasing 67
4.12 GIS Management, Data Integration, Access and Reporting 68
4.13 Management & Protection Plans for Outdoor Recreation 69
4.14 Bird/AnimalAircraft Strike Hazard 69
4.15 Wildland Fire Management 69

4.16 Training of Natural Resources Personnel 69
4.17 Coastal/Marine Management 70
4.18 Floodplains Management 71
4.19 Other Leases 71
4.20 Climate Change Initiatives 71
5. Implementation 73
5.1 Summary of process 73
5.2 Achieving No Net Loss 73
5.3 Use of Cooperative Agreements 74
5.4 Other Agreements 74
5.5 Priority Setting and Funding Classification 75
5.5.1 Description of Funding Process: 77

Pacific Beach INRMP crosswalk to the Department of Defense Template	
DoD Template	Pacific Beach INRMP
Cover Page	Cover Page
Signature Page	Signature Pages
Executive Summary	Executive Summary
Table of Contents	Table of Contents
Chapter 1 – Overview	Chapter 1. Overview
1.a. Purpose	1.1 - Purpose
1.b – Scope	1.2 - Scope
1.c. – Goals and Objectives Summary	1.3 - Goals and Objectives
1.d – Responsibilities of Stakeholders	1.4 - Responsibilities
1.e – Commitment of Regulatory Agencies	1.5 - External Stakeholders
1.f – Authority	1.6 - Authority
1.g – Stewardship of Compliance Statement	1.8 - Stewardship and Compliance
1.h – Review and Revision Process	1.9 - Review and Revision Process
1.i – Management Strategies	1.10 - Management Strategy
1.j – Integration with other Plans	1.11 - Integration with Other Plans
Chapter 2 – Current Condition and Use	Chapter 2 – Current Condition and Use
2.0 – Installation Information	2.1 - Installation Information
2.a.1 – Location Statement (concise)	2.1.1 - General Description
2.a.2 – Regional Land Use	2.1.2 - Regional Land Uses
2.a.3 – History and Pre-Military Land Use (abbreviated)	2.1.3 - Abbreviated History and Pre-Military Land Use
2.a.4 – Military Mission	1.7 - Military Mission
2.a.5 – Operations and Activities	2.1.4, 2.1.5 - Operations and Activities
2.a.6 – Constraints Map	2.1.6 - Natural Resources Constraints
2.a.7 – Opportunities Map	2.1.7 - Natural Resources Opportunities
2.b – General Physical Environment and Ecosystems	2.2 - General Physical Environment
2.c – General Biotic Environment	2.3 - General Biotic Environment
2.c.1 – Threatened and Endangered Species and Species of Concern	2.3.1 - Threatened and Endangered Species and Species of Concern
2.c.2 – Wetlands and Deep Water Habitats	2.3.2 - Wetlands
2.c.3 – Fauna	2.3.3 – Fauna; Other Fish and Wildlife Species

2.c.4 – Flora	2.3.4 – Vegetation
Chapter 3 – Environmental Management Strategy and Mission Sustainability	3 - Environmental Management Strategy and Mission Sustainability
3.a – Supporting Sustainability of the Military Mission and the Natural Environment	3.2 - Supporting Sustainability of the Military Mission and the Natural Environment
3.a.1 – Integrate Military Mission and Sustainability Land Use	3.2- Supporting Sustainability of the Military Mission and the Natural Environment
3.a.2 – Define Impact to the Military Mission	3.2- Supporting Sustainability of the Military Mission and the Natural Environment
3.a.3 – Describe Relationship to Range Complex Management Plan or other Operational Area Plans	NA
3.b – Natural Resources Consultation Requirements (Section 7, EFH)	3.3 - Natural Resources Consultation Requirements
3.c. – NEPA Compliance	3.4 - NEPA Compliance
3.d – Opportunities for Beneficial Partnerships and Collaborative Resource Planning	3.5 - Beneficial Partnerships and Collaborative Resource Planning
3.e – Public Access and Outreach	3.6 - Public Access and Outreach
3.e.1 – Public Access and Outdoor Recreation	3.6 - Public Access and Outreach
3.e.2 – Public Outreach	3.6 - Public Access and Outreach
3.e.3 – Encroachment Partnering	3.7 – Encroachment Partnering
3.e.4 – State Comprehensive Wildlife Plans Integration	4.4.1 - State Comprehensive Wildlife Plans Integration
Chapter 4 – Program Elements	Chapter 4 – Natural Resource Management
4.a. – Threatened and Endangered Species and Species Benefit, Critical Habitat, Species of Concern Management	4.1. – Threatened and Endangered Species, Critical Habitat, and Species of Concern
4.b – Wetlands and Deep Water Habitats	4.2 – Wetlands Management
4.c – Law Enforcement	4.3 – Law Enforcement of Natural Resource Laws and Regulations
4.d – Fish and Wildlife	4.4 - Fish and Wildlife Management
4.e – Forestry	4.5 Forestry Management
4.f. – Vegetation	4.6 – Vegetation Management
4.g – Migratory Birds	4.7 – Migratory Bird Management
4.h – Invasive Species	4.8 – Invasive Species Management
4.i – Pest Management	4.9 – Pest Management
4.j – Land Management	4.10 – Land Management (erosion)
4.k – Agricultural Outleasing	4.11 - Agricultural Outleasing
4.l – GIS Management, Data Integration, Access, and Reporting	4.12 - GIS Management, Data Integration, Access, and Reporting
4.m – Outdoor Recreation	4.13 – Management and Protection Plans for Outdoor Recreation
4.n – Bird Aircraft Strike Hazard	4.14 – Bird/Animal Aircraft Strike Hazard
4.o – Wildland Fire	4.15 – Wildland Fire Management

4.p – Training of Natural Resource Personnel	4.16 – Training of Natural Resource Personnel
4.q – Coastal/Marine	4.17 – Coastal/Marine Management
4.r – Floodplains	4.18 – Floodplain Management
4.s – Other Leases	4.19 – Other Leases
Chapter 5 – Implementation	Chapter 5 – Implementation
5.a – Summary of Project Prescription Development Process	5.1 – Summary of Process
5.b – Achieving No Net Loss	5.2 – Achieving No Net Loss
5.c - Use of Cooperative Agreements	5.3 – Use of Cooperative and Interagency Agreements
5.d – Funding Process	5.5 - Funding
Appendix 1. Acronyms	Appendix E. Acronyms
Appendix 2. Detailed Natural Resource Prescriptions	NA – none proposed
Appendix 3. List of Projects	Appendix D – Project List
Appendix 4. Surveys; Results of Planning Level Surveys	Appendix F – to be added when available
Appendix 5. Research Requirements	NA – none required
Appendix 6. Migratory Bird Management	NA – covered within document
Appendix 7. Benefits for Endangered Species	NA – covered within document
Appendix 8. Critical Habitat	NA – covered within document
	Appendix A – Natural Resource Manager Designation Letter
	Appendix B – EA for the INRMP
	Appendix C – MOU for Fire Suppression and Emergency Services

This page intentionally left blank

1. Overview

A Note on Naming Convention

The term "Pacific Beach" has been used to refer to the location within Washington State, the Navy-owned property of the Pacific Beach facility and to the community from which the installation derives its name. Within this Integrated Natural Resources Management Plan (INRMP), the Navy's Pacific Beach installation will be referred to as "Pacific Beach" or "the installation."

1.1 Purpose

Pacific Beach is a Navy installation on the Pacific Coast of Western Washington that is under the command of Naval Station Everett (NSE). This INRMP was developed separately from the NSE INRMP, as a stand-alone document to guide natural resources management specifically at the Pacific Beach location. This INRMP is a long-term planning document that will inform and assist the NSE Command with the management of natural resources at Pacific Beach. The purpose of this plan is to identify and evaluate natural resources at Pacific Beach, and to integrate natural resources management with the military mission and recreational activities that occur at the installation. The intent of the INRMP is protect and enhance natural resources in a manner consistent with the military mission and recreational activities, and to ensure activities are conducted in compliance with stewardship and legal requirements.

Additionally, OPNAV M-5090.1, Chapter 12 (12-3.3) requires INRMP development to follow these principles:

(1) A shift from single species to multiple species conservation;
(2) Formation of partnerships necessary to consider and manage ecosystems that cross installation boundaries; and
(3) Use of the best available scientific information and scientifically sound strategies for adaptive management.

1.2 Scope

This INRMP was developed specifically for the Navy-owned property located within the unincorporated community of Pacific Beach in Grays Harbor County, Washington (Figure 1).

Figure 1. The Pacific Beach Annex encompasses about 52 acres.

1.3 Goals and Objectives

1.3.1 General INRMP Goals

A successfully implemented natural resources program at Pacific Beach will meet two basic goals which are closely related and not mutually exclusive:

- Ensure the sustainability of ecosystems that encompass the installation; and
- Ensure no net loss in the capability of installation lands to support the military mission at Pacific Beach.

1.3.2 INRMP Objectives

The Pacific Beach natural resources program objectives are to:

- Meet the general Navy INRMP Goals stated above. ,
- Protect, conserve, and manage the watersheds, wetlands, natural landscapes, fish and wildlife and other natural resources, as vital elements of a natural resources program.
- Protect threatened, endangered, and sensitive (TES) species and critical habitats regulated through the Endangered Species Act (ESA).
- Use and care for natural resources in the combination best serving present and future needs.
- Provide for the optimum use of land and water areas, and access thereto while maintaining safety, security and ecological integrity.
- Ensure installation land-use planning is consistent with ecosystem and species management plans; incorporate findings of surveys and assessments, including climate change analyses into development of installation land-use/activity-siting criteria.
- Assign professionally trained personnel to this program and provide natural resource personnel the opportunity to participate in Natural Resources Management (NRM) job-training activities and professional meetings.
- Provide natural resource oversight to proposed military and Morale, Welfare, and Recreation (MWR) projects and activities on the installation; address concerns and provide solutions on a project-specific basis.
- Implement projects that promote the maintenance and restoration of natural conditions.
- Implement projects that manage stormwater runoff and reduce erosion.
- Promote awareness of migratory birds to visitors of Pacific Beach.

1.4 Responsibilities

1.4.1 Installation Commanding Officer

The NSE CO holds the highest-ranking position at the installation and ultimately is responsible for all aspects of the installation and its many functions. This includes ensuring that the INRMP is developed, implemented, and fully supported. The CO can facilitate the implementation of the INRMP by encouraging support down the chain of command. The CO must ensure that processes are established for early coordination with the MWR staff at Pacific Beach and with personnel performing mission-related activities (described below in Sections 1.7 and 2.1.5). The NRM and the CO must also ensure that natural resources management is integrated with mission-related military training and testing, and other activities that occur on the Pacific Beach property (Sections 1.7, 2.1.4 and 2.1.5).

Installation Commanding Officers (CO) of shore activities holding Class 1 plant accounts shall:

a) Act as stewards of natural resources under their jurisdiction.
b) Integrate natural resources requirements into the day-to-day decision-making process.
c) Ensure the preparation and implementation of an INRMP and systematically apply the conservation practices set forth in plan.
d) Appoint, by letter, an installation Natural Resources Manager.
e) Implement programs to reduce the potential for collisions between aircraft and birds or other animals if the installation supports a flying mission.
f) Ensure that current and planned mission activities are effectively coordinated in a timely manner with the installation Natural Resource Manager.
g) Ensure incorporation of soil and water conservation measures and landscaping in the preliminary engineering, design, and construction of facilities involving ground disturbance.
h) Review all non-excess land to identify areas that may be suitable and available for agricultural outleasing or commercial forestry.
i) Enter into fish and wildlife and outdoor recreation cooperative agreements developed on behalf of the Secretary of Defense as required by the Sikes Act.
j) Sign the final version of the installation INRMP and new signature pages subsequent to each review for operation and effect.

1.4.2 Regional Commander

Navy Region Northwest Regional Commander shall:

a) Ensure that installations comply with DoD, DON, and CNO policy on INRMP and associated National Environmental Policy Act (NEPA) document preparation, revision, and implementation.
b) Ensure that installations under their control undergo annual informal reviews as well as formal five-year evaluations.
c) Ensure the programming of resources necessary to maintain and implement INRMPs, which involves:

1) The evaluation and validation of Environmental Program Requirements (EPR)-web project proposals.
2) The funding of installation natural resources management staff.

d) Participate in the development and revision of INRMPs, which involves:
   1) Maintenance of a close liaison with the local/regional USFWS and appropriate state fish and wildlife Agency and other INRMP stakeholders.
   2) Endorsement of the INRMP by Regional Commander signature.

1.4.3 Commander, Naval Facilities Engineering Command (NAVFAC)

NAVFAC shall serve as the technical and contracting support command to N45, CNIC, regions, and installations. NAVFAC and their field offices shall, as requested by the above commands:

a) Provide technical and contractual support to Regional and Installation Commanders for the preparation, development and implementation of INRMPs and associated NEPA documents.
b) Facilitate and coordinate the issuance of INRMP related NEPA documentation.
c) Represent and/or assist N45 with the Sikes Act Coordination Group.
d) Evaluate and disseminate information concerning new technology, methods, policies, and procedures for use in the development and implementation of INRMPs.
e) Assist with the development of the INRMP Project Implementation Table, EPR and Legacy project proposals.
f) Provide technical and administrative support for the execution and acquisition of contracts and cooperative agreements to develop and implement INRMPs.
g) Facilitate the acquisition of INRMP mutual or cooperating agreements between the Navy, USFWS, and state fish and wildlife agencies.
h) Facilitate resolution of conflicts between the Navy, USFWS, and state fish and wildlife agencies and other stakeholders if necessary.

Independent of command requests, NAVFAC shall:

a) Provide technical oversight and resources for forest management and agricultural outlease projects.
b) Provide technical oversight and budget approval of installation fish and wildlife/hunting and fishing fee and permit projects.
c) Compile, track, and maintain INRMP metrics on the Natural Resources Data Call Station.
d) Review and sign INRMPs via Facilities Engineering Command (FEC) Natural Resources Managers to ensure technical sufficiency.

Commander, NAVFAC Northwest shall:

a) Provide professional natural resources management staffing to the installation via the installation's Public Works Department (PWD).
b) Provide regional coordination for:
   1) NRM requirements with other Federal, State or local professional authorities, including section 7 consultations under the ESA.

2) Provide technical assistance to regional commanders and installations in carrying out their responsibilities.
3) Provide the technical and administrative guidance for the development of cooperative agreements to implement natural resources plans and execute cooperative agreements on behalf of installation commanders upon request.

c) Develop, manage and execute agricultural out-leasing programs, provide appropriate technical expertise and conservation planning, prepare reports, documents and contracts.
d) Provide regional coordination of natural resources program funding.

1.4.4 Commander, Navy Installations Command

CNIC shall ensure that installations under their command develop, revise, and implement INRMPs as required, and shall:

a) Ensure that appropriate Department of Defense (DoD)/Department of the Navy (DON) and CNO policy guidance is utilized by installations to develop, revise, and implement INRMPs.
b) Ensure the programming of resources necessary to maintain and implement INRMPs, which involves:
   1) The review and endorsement of projects recommended for INRMP implementation prior to submittal for signature.
   2) The evaluation and validation of INRMP actions and project proposals in the Navy funding system (Environmental Programming Requirements (EPR) Web).

1.4.5 Chief of Naval Operations, Environmental Readiness Division

Chief of Naval Operations (CNO) shall serve as the principal leader and overall Navy program manager for the development, update, and implementation of INRMPs and shall:

a) Provide policy, guidance, and resources for the development, update, and implementation of INRMPs and associated NEPA documents.
b) Represent the Navy on issues regarding development and implementation of INRMPs and delegate responsibility in writing.
c) Resolve high-level conflicts associated with development and implementation of INRMPs.
d) Approve all INRMP projects before INRMPs are submitted to regulatory agencies for signature.

1.4.6 Natural Resources Manager

The Natural Resources Manager (NRM) responsible for Pacific Beach is a member of the NSE Public Works Department (PWD) Environmental Division in Everett and is administratively a NAVFAC employee. The NRM is designated by the Commanding Officer (Appendix A). The NRM duties include ensuring that the CO is informed about natural resources issues, conditions of natural resources, objectives of the INRMP, and potential or actual conflicts between mission

requirements and natural resources mandates. Further the NRM is responsible for the preparation, revision, implementation, and funding for INRMPs. The NRM is primarily responsible for implementing this INRMP and coordinating natural resources management with other personnel at the installation. Some of the implementation responsibilities include identifying personnel, internal or external to the installation, with expertise to perform the work identified; identifying the appropriate funding sources to carry out projects; and ensuring installation personnel are familiar with the contents of this INRMP. The NRM is also responsible for ensuring this plan is reviewed in coordination with the U.S. Fish and Wildlife Service (USFWS) and the Washington Department of Fish and Wildlife (WDFW).

1.4.7 Public Affairs Officer

The Public Affairs Office (PAO) provides a significant link between the INRMP and the on- and off-installation communities. The PAO can facilitate communication between offices across the installation and nearby communities regarding environmental management initiatives. Any proposed communications outside the installation should be discussed with the PAO.

1.4.8 Morale, Welfare and Recreation

The Commander, Navy Installations Command establishes, executes, and oversees the Navy's military Morale, Welfare and Recreation (MWR) program. At Pacific Beach, the MWR program operates the Resort and Conference Center and provides a daily presence for visitors. Morale, Welfare, and Recreation staff are the interface with the public that uses the resort facilities. Since there is not a NRM on site, coordination with MWR staff is important in communicating natural resource concerns or promoting specific projects or events. MWR staff will communicate with visitors regarding specific natural resource topics as provided to them by the NRM.

1.4.9 Other Mission-Related Navy Personnel

Personnel and contractors from the Navy's Pacific Fleet will be on-site to operate the Electronic Warfare (EW) Tactical Training Range (TTR) consisting of fixed and mobile emitter systems in and around Building 104 (See 1.7 Military Mission below). Personnel from the Naval Sea Systems Command, Naval Undersea Warfare Center maybe on site, associated with surf zone activities conducted in support of the Quinault Underwater Tracking Range. These personnel will be responsible for communicating with the Everett CO and NRM as needed concerning natural resource issues associated with their activities on the Pacific Beach installation. In addition, they are responsible for coordinating with the NRM on any proposed changes to their activities at Pacific Beach.

1.4.10 Other Internal Stakeholders

The CNIC Regional Environmental staff shall:

- Inform the NRM of new conservation regulatory requirements (i.e. proposed listings of threatened and endangered species, proposed critical habitat restrictions, biological opinions, NEPA mitigation measures, etc.,) that may impact Naval readiness and sustainability at Pacific Beach.

- Assist in compliance with DoD, DON, and CNO policies on INRMP and NEPA document preparation, revision, and implementation and coordinate an ecosystems approach with the NRM and INRMP development with other military services.

- Maintain involvement in the development and revision of this INRMP by maintaining a close liaison with the local/regional USFWS office and appropriate state fish and wildlife agencies and other INRMP stakeholders, and assisting in obtaining endorsement of this INRMP by Regional Commander signature.

Other internal stakeholders include **NAVFAC Everett Facility Planning** and **NAVFAC Everett Facilities Engineering and Acquisition Division**. These divisions are responsible for providing early awareness to the NRM of proposed activities and projects at Pacific Beach. They will work with the NRM during project development to ensure proposed projects are consistent with this INRMP, and ensure that appropriate environmental analyses are conducted and protective measures included in project design prior to on-the-ground activities.

1.5 External Stakeholders

1.5.1 U.S. Fish and Wildlife Service

The Sikes Act directs DoD to prepare INRMPs in cooperation with the U.S. Fish and Wildlife Service (USFWS). The goal is to gain mutual agreement with respect to the entire INRMP, but agreement is only required with respect to conservation, protection, and management of fish and wildlife resources. The USFWS, along with the Navy and the Washington Department of Fish and Wildlife (WDFW), has signature approval authority for this INRMP and USFWS biologists may be called upon to provide assistance and support to the NRM, if necessary.

1.5.2 Washington Department of Fish and Wildlife

The Sikes Act also directs DoD to prepare INRMPs in cooperation with the appropriate state fish and wildlife office; in this case the Washington Department of Fish and Wildlife. The goal is to gain mutual agreement with respect to the entire INRMP, but agreement is only required with respect to conservation, protection, and management of fish and wildlife resources. The Washington Department of Fish and Wildlife, along with the Navy and USFWS, has signature approval authority for this INRMP. WDFW biologists may be called upon to provide assistance and support to the NRM, if necessary.

The WDFW manages wildlife and habitat under its State Wildlife Action Plan (SWAP); a comprehensive plan for conserving Washington's fish and wildlife and the natural habitats on which they depend. One guiding principle of the SWAP planning process is to identify actions needed to conserve wildlife and their habitats before species become too rare and restoration efforts too costly. Washington's SWAP is nearing completion of a 10-year update. The WDFW and the NRM will coordinate to ensure natural resource management at Pacific Beach meets the intent of the SWAP in conserving, protecting, and managing fish and wildlife resources.

Commitment of the U.S. Fish and Wildlife Service and the State - The USFWS and WDFW agree to cooperate in the development of the INRMP and to review the INRMP as to operation and effect at least once every five years. In addition to the formal five-year review, DoD policy calls for annual INRMP reviews that are conducted in coordination with the Sikes Act partners.

No element of the Sikes Act (as amended) is intended to either enlarge or diminish the existing responsibility and authority of the USFWS or WDFW concerning fish and wildlife responsibilities on military lands. An INRMP reflects a mutual agreement of the parties concerning the conservation, protection, and management of fish and wildlife resources. Per the MOU between the U.S. Department of Defense, U.S. Fish and Wildlife Service and the Association of Fish and Wildlife Agencies. (July 29 2013) a comprehensive, joint review by all parties as to operation and effect will be conducted no less often than every five years. While once every five years is required, an annual review is also expected.

National Marine Fisheries Service - The Sikes Act does not require NMFS to participate in the development of INRMPs but coordination with this agency may be appropriate when listed species under NMFS jurisdiction would benefit from INRMP implementation. The NMFS is not required to review INRMPs for operation and effect but their participation is recommended when appropriate. In the case of this INRMP for Pacific Beach, participation by NMFS was not sought because neither species under their jurisdiction or habitats for such species exist on the Pacific Beach property.

1.5.3 Native American Tribes

Pursuant to SECNAVINST 11010.14A, COMNAVREGNWINST 11010.14, and OPNAV M-5090.1, the Navy consults with federally recognized American Indian Tribes if Navy proposed actions could potentially affect Indian resources. Pacific Beach is included in property ceded to the United States by the Quinault Tribe pursuant to the Quinault Treaty of 1856. In accordance with Navy policy, the Quinault Tribe as well as the Hoh Tribe, Makah Tribe, and Quileute Nation will be invited to review and comment on the INRMP and annual updates.

1.6 Authority

The Sikes Act is one of the primary drivers behind the development of this INRMP. According to the Sikes Act, the purposes of a military conservation program are conservation and rehabilitation of natural resources, sustainable multipurpose use of those resources, and public access to military lands, subject to safety requirements and military security. Moreover, the conservation program must be consistent with the mission-essential use of the installation and its lands. The Sikes Act requires the preparation of an INRMP to facilitate the conservation program: "the Secretary of each military department shall prepare and implement an integrated natural resources management plan for each military installation in the United States under the jurisdiction of the Secretary, unless the Secretary determines that the absence of significant natural resources on a particular installation makes preparation of such a plan inappropriate."

In addition to the Sikes Act, this INRMP has been prepared consistent with guidance and regulations provided in DoD Instruction 4715.03, OPNAV M-5090.1, associated Navy Guidance (2006), and DoD Sikes Act and INRMP guidance. Collectively these guiding documents require a management approach that integrates mission support, multiple use, natural resource conservation, ecosystem management and environmental compliance and stewardship:

- *DODINST 4715.03, Department of Defense Instruction (18 March 2011).* This instruction: a)Reissues and renames Department of Defense Instruction 4715.3 to establish policy and assign responsibilities for compliance with applicable Federal, State, and local statutory and regulatory requirements, Executive Orders (E.O.s), Presidential memorandums, and Department of Defense policies for the integrated management of natural resources including lands, air, waters, coastal, and nearshore areas managed or controlled by DoD, b) Develops new policy and updates policy for the integrated management of natural resources (including biological and earth resources) on property and lands managed or controlled by DoD, c) Implements new Natural Resources Conservation metrics, and d) Provides procedures for DoD Components and installations for developing, implementing, and evaluating effective natural resources management programs.

- *DODINST 4715.03, Department of Defense Manual (25 November 2013) INRMP Implementation Manual.* This manual pertains to both natural and cultural resources management on DoD lands. It includes budgeting classifications for funding priorities and detailed information on the intent of INRMPs. Exhibit 1–1 of this manual lists the specific contents required in an INRMP document.
- *Memorandum of Understanding (MOU) between the U.S. Department of Defense, U.S. Fish and Wildlife Service and the Association of Fish and Wildlife Agencies. (July 29 2013)*. This Tripartite MOU furthers a cooperative integrated natural resource management program on military installations and furthers cooperative relationships between the U.S. Department of Defense, U.S. Department of the Interior Fish and Wildlife Service, and state fish and wildlife agencies acting through the Association of Fish and Wildlife Agencies in preparing, reviewing, revising, updating and implementing Integrated Natural Resource Management Plans for military installations.
- *Memorandum on Implementation of Sikes Act Improvement Amendment: Updated Guidance*. This Memorandum of the Under Secretary of Defense, issued on 10 October 2002, provides guidance for implementing the requirements of the Sikes Act in a consistent manner throughout DoD and replaces 21 September 1998 guidance. The October 2002 memorandum and its supplement issued in November 2004 emphasize implementing and improving the overall INRMP coordination process and focus on coordinating with stakeholders, reporting requirements and metrics, budgeting for INRMP projects, using the INRMP as a substitute for critical habitat designation, supporting military training and testing needs, and the INRMP review process.
- *The Implementation of Sikes Act Improvement Amendment:* Supplemental Guidance Concerning Leased Lands, 17 May 2005. This document provides supplemental guidance for implementing Sikes Act requirements consistently throughout the Department of Defense. The guidance covers lands occupied by tenants or lessees or being used by others pursuant to a permit, license, right of way, or any other form of permission. Installation Commanding Officers may require tenants to accept responsibility for performing appropriate natural resource management actions as a condition of their occupancy or use, but this does not preclude the requirement to address the natural resource management needs of leased lands in the installation INRMP.
- *OPNAV M-5090.1, Environmental Readiness Program Manual 2014* - Establishes broad policy and assigns responsibilities for the Naval Natural Resources Program. Naval Facilities Engineering Command is assigned overall program management responsibility with authority to establish, coordinate, and promulgate the program; to issue appropriate instructions to the Navy installations for implementation of the various natural resources programs; and to provide

professional natural resources services and technical assistance, through Engineering Field Activities, to Navy and Marine Corps Installations. It also directs major claimants and intermediate commands to ensure that subordinate commands support natural resources programs on installations under their control. Installation Commanding Officers are tasked with:

- Acting as stewards of natural resources under their jurisdiction, developing and maintaining an effective conservation program as outlined in this instruction, and using technical assistance from NAVFAC as necessary.
- Providing funding to ensure adequate support of the natural resources program.
- Applying practices set forth in approved natural resources management plans.
- Assigning specific responsibilities, centralized supervision, and qualified personnel to the natural resources program.

Guidance in OPNAV M-5090.1 that is pertinent to this INRMP in incorporated herein by reference.

- *Guidelines for Preparing Integrated Natural Resources Management Plans for Navy Installations (April 2006).* This guidance provides natural resources managers at Navy installations with an interpretation of what processes are needed to prepare INRMPs, including the INRMP template. This document is divided into three sections. The first section suggests a process to develop an INRMP. The second section addresses traditional technical areas to be included in the INRMP. The third section includes a discussion on implementing the INRMP. Of particular value within this guidance is a comprehensive list of Laws, Regulations, Executive Orders, templates and instructions applicable to this INRMP.

1.7 Military Mission

The current military mission at Pacific Beach consists of providing an operational support location for nearby training activities. The Transmitter Support Building (B 104) (Figure 2), towered fixed emitter system within the fenced area around B 104 of about 1.5 acres, and possibly other locations at the installation will be used to support training exercises conducted in and over the Pacific Ocean by Pacific Fleet and NAVSEA Naval Undersea Warfare Center.

Mission support at Pacific Beach includes the installation and operation of TTR instrumentation to support Fleet EW training requirements. Training and testing occur within the Northwest

Training Range Complex, including the Quinault Underwater Tracking Range which is part of the Keyport Range Complex.

Northwest Training Range Complex – Navy training exercises occur in the air, on the ocean surface, and subsurface in the Pacific Ocean within the Northwest Training Range Complex (NWTRC), including Federal Aviation Administration-designated Special Use Airspace over the Olympic Peninsula and adjacent air and water spaces extending westward from the Pacific Coast.

A 2010 EIS analyzed an increase in training activities over then current levels, in order to address shortfalls in the training range complex that affected the quality of training. Details of these activities are in the EIS (U.S. Navy 2010a). The Navy is presently analyzing the effects of current, emerging, and future military readiness training and testing activities in the Northwest Training and Testing EIS (U.S. Navy 2015).

Figure 2. Building 104 would be used for operational support of training that occurs in the NWTRC and Pacific ocean.

Electronic Warfare Range – Northwest Training Range Complex activities covered in the 2010 EIS included a proposal to install and operate an Electronic Warfare (EW) Tactical Training Range in Washington. The NWTRC EIS analyzed the concept of a fixed emitter placed on the Olympic Peninsula to enhance electronic combat training. Pacific Beach was chosen as the operational location for the fixed emitter (Figures 3 and 4), which will support the EA-18G "Growler" aircraft stationed at Naval Air Station Whidbey Island and other Fleet assets. The emitter will be about 66 feet tall (40-foot tower and 26-foot diameter emitter) and will be installed within the fenced perimeter of Building 104.

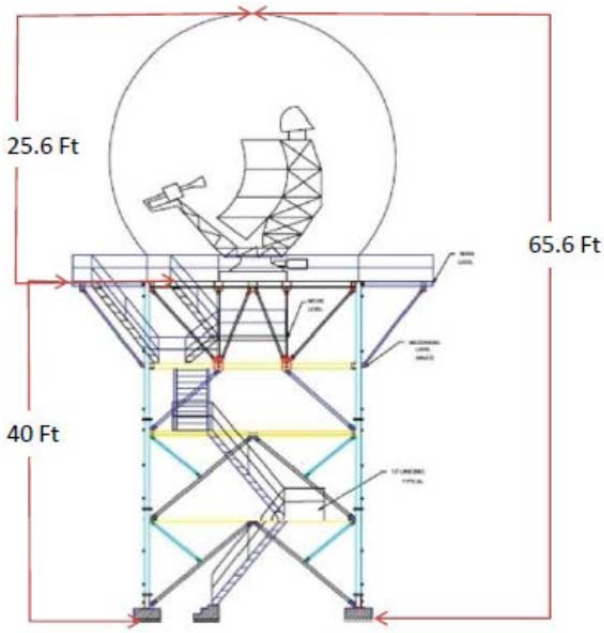

Figure 3. Dimensions of the fixed emitter (From U.S. Navy 2014)

An EA was prepared in 2014 to analyze the effects of previously unanalyzed components of operating the proposed EW range, including the installation and operation of a fixed emitter at Pacific Beach, and including renovations to Building 104. The purpose of the Proposed Action is to sustain and enhance the level and type of EW training currently being conducted by assets using the NWTRC and to provide the ability to accommodate growth in future training requirements while maximizing the ability of local units to achieve their training requirements on local ranges (U.S. Navy 2014). A FONSI was signed for the Proposed Action on 28 August 2014.

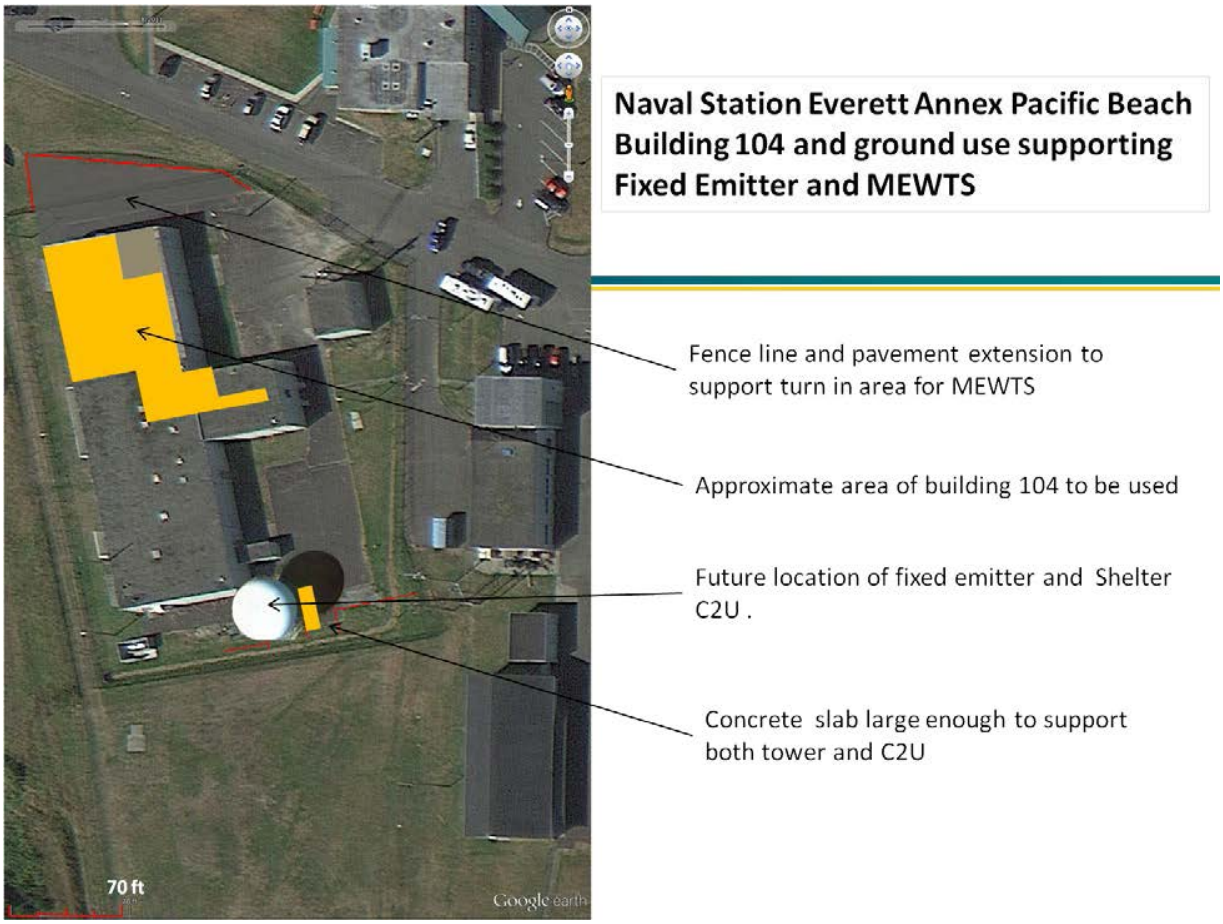

Figure 4. Location of fixed emitter at Building 104, Pacific Beach (From U.S. Navy 2014).

Keyport Range Complex - The NAVSEA Naval Undersea Warfare Center (NUWC) Keyport Division is extending the Keyport Range Complex and completed an environmental analysis with public involvement under NEPA in 2010. The full scope of Keyport Range Complex activities, including the extension of the Range Complex were included in the Northwest Training Range Complex EIS discussed above (U.S.Navy 2010b).

Keyport Range training activities include establishing a 10 mi^2 surf zone on the beach below the Pacific Beach installation as part of operations conducted in the adjacent Quinault Underwater Tracking Range. About 1 mile of shoreline, and a surf zone from 0 to 100 ft. water depth would be used in support of training exercises.

Activities in the surf zone can include shore deployment system testing, remote operation and surveillance of Unmanned Undersea Vehicles, shallow water bathymetry sensing, sub-bottom profiling, Unmanned Aerial Systems testing, and testing a bottom-crawling robotic vehicle in the surf-zone area.

A small boat and divers would potentially be used as a backup for launch and retrieval of the robotic crawler vehicle. The target shapes, crawler vehicle, and associated support hardware may be transported overland from NUWC Keyport to the surf-zone test area, deployed from a truck, and recovered during low tide.

1.8 Stewardship and Compliance

The Navy is responsible for complying with all appropriate environmental laws and regulations. OPNAV M-5090.1 identifies these and provides guidance on compliance. Naval Station Everett has an environmental compliance program that includes Pacific Beach, which is administered through the NAVFAC Public Works Department, Environmental Division.

Further, the Navy has a mandate to implement programs for the conservation of natural resources. To be successful, natural resource programs must integrate with military activities to ensure there is no net loss to the military mission; ensure sustainable, multipurpose use of natural resources, provide public access when appropriate; and develop positive community involvement, participation, and education opportunities with the surrounding communities.

As a steward of military land, the Navy recognizes that installation lands in Navy Region Northwest are part of diverse, functioning ecosystems. Sustainability ensures the integrity of natural ecosystems over time while meeting the needs of the military mission. Stewardship goes beyond regulatory compliance. Natural resource stewardship considerations are integrated into the planning phase of projects by requiring environmental review of projects proposed at Pacific Beach.

The Commanding Officer, operational personnel, and other installation personnel have an influence on environmental conditions. At Pacific Beach they become part of the solution by working with the Natural Resources Manager and integrating their perspectives within the management process of the installation and through implementation of this INRMP.

1.9 Review and Revision Process

An evaluation of natural resource management at Pacific Beach will be performed each year using this INRMP as the basis for the evaluation. This will include participation by representatives from USFWS and WDFW, and will use the Navy's internet-based Conservation Metrics tool (see below) to evaluate the plan's relevance, operation, and effectiveness. These annual evaluations are the venue for assessing the effectiveness of the INRMP, and also serve to ensure regular interagency coordination.

1.9.1 Annual INRMP Review and Conservation Metrics

Per DoD Instruction 4715.03 and OPNAV M-5090.1, Natural Resources Conservation Metrics (Metrics) must be completed by each Navy installation with natural resources. The Metrics ensure that Navy installations are in compliance with the Sikes Act (16 USC 670(a)) and that each region or installation is preparing, maintaining, and implementing its Integrated Natural Resources Management Plan (INRMP). The metrics also support Endangered Species Act (ESA) expenditure reporting to Congress by the US Fish & Wildlife Service (USFWS). Furthermore, the Metrics contribute to information collected for the Defense Environmental Program Annual Report to Congress (DEPARC) and the Office of Secretary of Defense's (OSD) Environmental Management Review (EMR). Data collected during the Metrics exercise also informs briefings up the DoD and Navy chains of command regarding the status of the Navy's Natural Resources Programs. As required by DoD and Navy policy, the Metrics are to be completed with the US Fish and Wildlife Service, state fish and wildlife agencies, and, when appropriate, NOAA Fisheries and other stakeholders and partners.
The annual INRMP review utilizes seven focus areas documented within the U.S. Navy's Environmental Portal
(https://eprportal.cnic.navy.mil/eprwebnet/logon.aspx). Access requires a CAC and login.

The evaluation considers seven focus areas:

1) Natural Resources Management (Ecosystem Integrity)
2) Listed Species and Critical Habitat
3) Recreational Use and Access
4) Sikes Act Cooperation (Partnership Effectiveness)
5) Team Adequacy
6) INRMP Implementation
7) INRMP (Natural Resource Program) Support of the Installation Mission

Use of the web-based Conservation Metrics generates Navy conservation program metrics which annually provide information on the status of the installation's Natural Resource Program, and the status of the Navy's relationship with USFWS and WDFW.

The annual evaluation must be completed in cooperation with the appropriate field offices of the USFWS and WDFW and will measure successes and identify issues resulting from INRMP implementation. Minor updates will be compiled each year from this review and from the change page at the beginning of this INRMP and appended to the INRMP as Annexes 1-5. The NRM at Naval Station Everett will maintain the controlled version of this INRMP and associated data within the installation's electronic and hardcopy file system.

1.9.2 Review for Operation and Effect

Consistent with guidance and references in the Natural Resources chapter of OPNAV M-5090.1, the NRM will review this INRMP for operation and effect cooperatively with USFWS and WDFW at least once every 5 years. This review is the statutory responsibility of these agencies and Navy funds may not be used to pay for their participation in this requirement. The review for operation and effect is conducted during the annual INRMP metrics review. Mutual agreement on operation and effect will be documented in writing in the form of a new signature page for the INRMP. The new signature page will be appended to this INRMP and uploaded to the Navy's internal Conservation Web site: https:// www.eprportal .cnic.navy.mil/

1.10 Management Strategy

Essentially, the natural resources management strategy for Pacific Beach consists of:

- Knowledge of the natural resources that are present, where they are, and for some species, when they are at the installation or in the vicinity of the installation.
- Early review by the NRM of planned actions and projects, identification of potential environmental impacts, and the development of alternatives or project design features to reduce, avoid and/or minimize impacts.
- Effective communication between those proposing future actions at Pacific Beach and the Natural Resource Manager to develop ways to minimize or eliminate potential environmental impacts.
- Identification of restoration or enhancement opportunities, prioritization of the opportunities, and seeking the funding to carry them out within the constraints of the military mission at the installation.

The NRM stationed at Naval Station Everett is responsible for natural resources management at Pacific Beach. The natural resource "program" at Pacific Beach will primarily consist of providing close oversight of MWR and mission-related activities in order to protect existing environmental conditions. Individual proposed projects will be reviewed and requirements imposed as needed to protect natural resources.

NAVFAC at Everett uses a Work Induction Board (WIB) to introduce new projects to the Public Works Department (including the Environmental Division) and to obtain initial input concerning possible impacts, including natural resource impacts. If there are concerns, further review and involvement in the project occurs through an established procedure within the Environmental Division where a scope of work and all available project details are submitted by the project proponent along with an Environmental Checklist. Environmental Division staff document regulatory and other requirements, suggestions and provide other comments on the Checklist and route it back to the project proponent. This process brings projects to the attention of the NRM so that potential effects can be identified, avoidance and minimization measures can be

added to the project design, and the proper level of NEPA analysis conducted. The process also is a mechanism to provide input, in writing, to the project proponent. This allows environmental considerations to be addressed up front and potential effects reduced by altering designs, adding Best Management Practices, adjusting project timing, etc. for projects that do not rise to the level of requiring an environmental assessment or environmental impact statement.

1.11 Integration with other Plans

1.11.1 Installation Integrated Cultural Resources Management Plan

An Integrated Cultural Resources Management Plan for Naval Station Everett includes Pacific Beach (U.S. Navy 2013). The Naval Station Everett CRM and NRM have responsibility for the Pacific Beach location and are able to coordinate on management of both cultural and natural resources in an integrated manner.

1.11.2 Integrated Pest Management Plan

Pacific Beach is included in the 2014 Integrated Pest Management Plan for Naval Station Everett (Naval Facilities Engineering Command 2014). The integrated approach to pest management is a planned program incorporating education, continuous surveillance, record keeping, and communication to prevent pests and disease vectors from causing unacceptable damage to operations, people, property, materiel, or the environment. This approach uses targeted, sustainable (effective, economical, environmentally sound) methods.

Generally herbicides are not used by MWR staff or groundskeeping staff at Pacific Beach. The Navy requires State-certified applicators for applying these products. Pest problems (e.g., mice, rats) are referred to the Navy's Base Operating Services Contract (BOSC) for resolution. The BOSC must follow the Integrated Pest Management Plan.

The Pacific Beach Resort manager is required to ensure that pest management is performed effectively by pest management service providers, and to ensure pest management records are reported.

The Integrated Pest Management Plan requires review and signed approval by the Installation Environmental Program Director and the NRM, providing a mechanism for maintaining awareness of the program.

1.11.3 Encroachment Action Plan

Naval Station Everett has an Encroachment Action Plan (2008) that includes encroachment concerns at Pacific Beach. This plan identified a possible risk to the Navy related to Navy-owned out-of service communication cables. The cables are oriented east-west, originate at Building 104 and cross private land before entering the ocean. This risk has since been remedied through establishment of an easement agreement with the private landowner so that the private land can be accessed to inspect the cables.

Along the western edge of the property, a loss of land due to erosion of the bluff on which the property sits is a risk, in terms of lost landbase (See cover photo). Another risk the Encroachment Action Plan identified was that of additional erosion, should privately-held land at the bottom of the bluff be developed.

Pacific Beach is also susceptible to encroachment due to the development of adjacent properties. Installation perimeter fences were installed inside the property boundary. Adjacent landowners assumed the fence was the property boundary and inadvertently built on Navy property that was outside the fence.

1.11.4 Strategic Plan for Amphibian and Reptile Conservation and Management on Department of Defense Lands

This is a strategic plan that summarizes current reptile and amphibian-related challenges and concerns on Department of Defense (DoD) lands. This plan provides a framework for accomplishing DoD-wide conservation objectives related to the protection of amphibians, reptiles, and their habitats as part of a comprehensive effort to manage natural resources in ways that preclude mission conflicts and loss of training capabilities that can result from conservation-based regulatory restrictions. To the extent applicable natural resources management at Pacific Beach will be conducted consistent with this strategic plan. Presently there are no constraints on mission activities at Pacific Beach related to amphibian or reptile regulatory restrictions.

1.11.5 Partners in Flight (PIF) Strategic Plan for Bird Conservation and Management on Department of Defense Lands

This plan identifies actions that support and enhance military missions while working to secure bird populations. It also provides a scientific basis for maximizing the effectiveness of resource management, enhancing the biological integrity of DoD lands, and ensuring continued use of these lands to fulfill military training requirements.

Military commanders must comply with the Migratory Bird Treaty Act (MBTA), Bald and Golden Eagle Protection Act, Executive Order 13186 (Responsibilities of Federal Agencies to

Protect Migratory Birds) and its associated Memorandum of Understanding, and the Final Rule on Take of Migratory Birds by the Armed Forces.

The PIF strategic plan presents a compilation of current best management practices and suggested focus areas to assist in compliance, and recognizes that one of the best ways to comply with the above legal requirements is to continue ongoing conservation efforts at the installation level. This helps protect and conserve birds and their habitats via implementation of INRMPs, as well as to build and maintain partnerships with other agencies and conservation entities.

In the strategic plan, DoD established goals to identify key bird conservation priorities and guide the actions of its natural resource management activities, including:

- Bird/Wildlife Aircraft Strike Hazard (BASH)
- Encroachment Minimization
- Stewardship
- Habitat and Species Management
- Monitoring
- Research
- Partnership/Cooperation
- Communication and Education
- Enhancing the Quality of Life

These goals will be pursued to the extent they are applicable for conservation of birds at Pacific Beach. Presently there are no constraints on mission activities at Pacific Beach related to bird regulatory restrictions.

1.11.6 National Environmental Policy Act Compliance

An INRMP is considered a major Federal action and as such, is subject to NEPA. An Environmental Assessment (EA) was conducted to evaluate the potential environmental effects associated with adopting this INRMP (Appendix B).

It is foreseeable that actions proposed by the Navy under an INRMP may be minor in nature and may have been adequately addressed under previous NEPA analyses. In such instances an updated INRMP may not necessarily require a new EA and may rely upon the determinations of previous EAs, if the updated INRMP is within the scope of that analysis.

Individual projects that are proposed at Pacific Beach, but that are not part of this INRMP will be assessed to determine the type of NEPA analysis needed. In most cases, projects are categorically excluded. Examples of such projects include:

- Inspection of the out-of-service communication cables.
- Surface drainage improvements and bluff erosion minimization.
- Routine real estate transactions with no on-the-ground changes.
- Various building repairs and upgrades.

1.11.7 Northwest Training Range Complex EIS and Electronic Warfare Range EA

Proposed mission-related activities at Pacific Beach in support of the Northwest Training Range Complex were analyzed within a September 2010 EIS, and a September 2014 Environmental Assessment . See Military Mission section for more information.

1.11.8 Keyport Range Complex EIS

Proposed mission-related activities at Pacific Beach in support of the Keyport Range Complex (Keyport Division of the Naval Undersea Warfare Center) were analyzed in a May, 2010 EIS. See Military Mission section for more information.

1.11.9 Northwest Training and Testing Final EIS/OEIS

The Navy identified the need to support and conduct current, emerging, and future training and testing activities in the Northwest Training and Testing and has analyzed these activities in an EIS (Final 2016). The proposed action includes mission-related support activities at Pacific Beach that are the same as those included in the above-referenced NEPA documents and described in the Military Mission section.

2. Current Conditions and Use

2.1 Installation Information

2.1.1 General Description

The Pacific Beach installation is located on the Pacific coast of Washington State. The property covers about 52 acres within the unincorporated town of Pacific Beach, Grays Harbor County. Approximately 300 people live in the town of Pacific Beach. The community of Moclips is 2.3 miles to the north (population 207). Other nearby cities are Aberdeen and Hoquiam (combined population of about 26,000), located approximately 30 miles to the southeast. Seattle is approximately 120 miles to the northeast.

The Pacific Beach property sits on an exposed coastal bluff, and consists of three separate parcels of Navy-owned land (Figure 5). The largest fenced parcel is 31.66 acres bounded to the east by 1st Street, to the west by the installation boundary on the bluff above the ocean, and to the south by an old Northern Pacific Railroad cut, which is privately owned. Ten rental houses, a hotel, RV parking, Navy administrative buildings, and maintenance facilities are on this parcel.

The second fenced parcel consists of 5.07 acres south of the first parcel and south of the old Northern Pacific Railroad cut. There are six rental houses on this parcel. The third fenced parcel consists of 5.35 acres on the east side of 1st Street along Chandler Avenue with fourteen rental houses.

The three fenced parcels of the Pacific Beach property are developed; characterized by buildings and houses, paved single-lane roads and parking areas, and large expanses of lawn. Along the western side of the installation, the property boundary extends partway down the bluff face, beyond the existing perimeter fence. This area is steep and heavily vegetated, with bare patches where the ground has eroded and sloughed off. This undeveloped land encompasses about 10 acres in total in two separate parcels north and south of the railroad cut (Cover and Figure 6).

Lands adjacent to the installation are developed residential properties containing private homes.

The Navy does not own or have easements on the beach or on the submerged lands immediately west of the installation; the Pacific Beach installation is entirely an upland property.

Figure 5. The Pacific Beach property consists of three separate parcels.

Figure 6. Steep, vegetated bluffs exist beyond the installation perimeter fence.

2.1.2 Regional Land Uses

The Pacific Coast in Washington is relatively undeveloped with expanses of commercial forest land, a few small towns, state parks, and accessible ocean beaches.

Ocean beaches – Recreational use focusing on ocean beaches is popular along the entire coast. Beach homes, vacation rentals, and private year-round homes are adjacent to the installation. A State Park with beach access is about ½ mile south of the installation within the town of Pacific Beach.

Other state parks with beach access and recreational facilities, RV parks, and campgrounds characterize the region. The MWR-operated Pacific Beach Resort is a destination in large part because of the nearby ocean beach.

Seashore Conservation Area and Designated Highway – Ocean beaches in Washington, including the beach directly west of the Pacific Beach installation, are within the state's designated Seashore Conservation Area, a designation making the area available to the public for a wide variety of recreational uses. This area is under the jurisdiction of the Washington state parks and recreation commission. The commission designated ocean beaches within the Seashore Conservation Area as public highways, open to the use of the public (with some restrictions) (RCW 79A.05.605, RCW 79A.05.610, RCW 79A.05.693). Vehicles must travel along the extreme upper limit of the hard sand. The speed limit is 25 mph.

Marine Sanctuary – The Olympic Coast National Marine Sanctuary is to the west of Pacific Beach. This Sanctuary encompasses 2408 square miles of marine waters off the Olympic Peninsula coastline. The sanctuary extends 25 to 50 miles seaward from the shore and northward along the Pacific Coast.

The sanctuary includes a productive upwelling zone important to marine mammals and seabirds and protects a variety of other marine life and habitats. All of the offshore islands, rocks, and reefs in the ocean adjacent to Pacific Beach are located within the Olympic National Marine Wildlife Sanctuary.

Private timber land – Inland, the main land use is commercial timber harvest from private lands managed by the state Department of Natural Resources, and harvest from public lands managed by the U.S. Forest Service.

Inland recreation – On the Olympic Peninsula northeast of Pacific Beach, the Olympic National Forest and Olympic National Park are recreational destinations. These areas contain rainforests used for hiking, fishing, and hunting.

2.1.3 Abbreviated History and Pre-Military Land Use

The first European-American settlement of the area began around 1862. By 1905, the Northern Pacific Railroad completed a rail line from Aberdeen to Moclips, which went through the town of Pacific Beach (Sackett 2012). With the arrival of the railroad and convenient access to the shores of the Pacific Ocean, people started coming to Pacific Beach for vacations and day-trips. The Quinault Inn, which became the Pacific Beach Hotel in 1911, was built on the bluff overlooking the Pacific Ocean where the current installation is. The hotel and surrounding communities continued to grow and prosper as a resort area (Figure 7) (Sackett 2012).

The Navy acquired the Pacific Beach property in 1942 for use during World War II (WWII) as an anti-aircraft training facility. The Pacific Beach Hotel and adjacent areas along the beach supported initial training of Navy personnel and Naval Armed Guard Service members (USNBY&D 1947; Morris 2008). Barracks and supporting buildings such as fire control towers, ammunition storage, and a live firing range were built in the area immediately north of the railroad cut to fulfill the core military mission of providing training operations (Figure 8.). Training at Pacific Beach ended with the end of WWII and the military offered the facility to the town of Pacific Beach for the sum of one dollar. The sale fell through because the town of Pacific Beach was unincorporated so did not have the mechanism to complete the transaction. The Navy retained ownership of the property (Sackett 2012).

Figure 7. Prior to military use, Pacific Beach prospered as a resort destination ca. 1915.
(Source, Museum of the North Beach, Moclips, WA)

Figure 8. The Navy acquired the Pacific Beach property for use during WWII.
In this photo, barracks are under construction ca. 1943.
(Source, Museum of the North Beach, Moclips, WA)

In 1948 the U.S. Air Force developed a stop-gap radar site at Pacific Beach as part of their Early Warning System. Late in the Cold War era (1958-2011), the Navy returned to Pacific Beach to establish an onshore facility in support of an offshore cable array which was part of the Sound Surveillance System (SOSUS) on the west coast. The SOSUS was an extensive underwater surveillance system used to track Soviet submarines during the Cold War. The system was developed in secret and consisted of a network of hydrophone arrays placed on the ocean bottom throughout the Pacific and Atlantic oceans. The hydrophones were connected by underwater cables. Low-frequency sound generated by submarines could be detected at long ranges by the hydrophone arrays located on continental slopes and seamounts. The undersea cables transmitted the data to onshore facilities where they could be analyzed. Near Pacific Beach, these SOSUS line arrays were located at the edge of the continental shelf looking out into the deep ocean.

The SOSUS was an active military operation under the command of Commander, Submarine Forces Pacific (COMNAVSUBPAC) until 2012; operating from Building 104. When these operations ended in 2012, COMNAVSUBPAC removed all supporting equipment and components from Building 104. The decision was made to leave the out-of-service underwater cables in place for potential future military missions, consistent with current Navy practice.

In order to provide SOSUS family housing, the Capehart Housing units were constructed at Pacific Beach in 1959 and were used for military family housing until 1962. Starting in 1987, the Navy began developing Pacific Beach for recreational use. This included converting the military family Capehart Housing units to vacation rental houses. Under the guidance of Naval Station Everett, the facility became part of Fleet & Family Readiness under the Morale, Welfare and Recreation (MWR) program. As a recreational facility, the Pacific Beach Resort is open to active and retired military and DoD civilian employees. Today most buildings at Pacific Beach are utilized for visitor accommodations and services, recreational activities, and support functions (e.g., carpentry shop, grounds maintenance shop, storage).

Additional details on the history of Pacific Beach and its buildings and structures are in Sackett (2012).

Cultural and Tribal Considerations – Prior to European-American settlement of Pacific Beach, the Quinault Tribe may have utilized the general area for hunting, fishing, or shellfish harvesting. There are no known traditional cultural or sacred sites on the Pacific Beach property, or in the immediate vicinity. No archaeological sites have been found on the surface of Pacific Beach because of previous, extensive ground disturbance associated with development of the site. Subsurface archaeological sites may exist in undisturbed pockets of soil (U.S. Navy 2013).

2.1.4 Non-Military Operations

Morale, Welfare, Recreation – The majority of the landbase at Pacific Beach is devoted to recreational amenities and activities for active duty and retired Military personnel and DoD civilian employees. Moral, Welfare, and Recreation operates the Pacific Beach Resort and Conference Center, which includes a hotel and individual suites providing 39 rooms total, RV parking pads for 43 units, a designated tent camping area with 26sites (Figure 9), 30 rental houses, and various recreational, administrative, and support buildings. July and August have the highest visitor use, with these facilities at 80-90% occupancy. In winter months (December-March) occupancy falls to 20-30%.

Figure 9. Tent camping at Pacific Beach.

2.1.5 Operations and Activities

Military mission operations and activities - Operation of a fixed emitter at Building 104: Prior to occupation, renovations were performed to the Transmitter Support Building (B 104). Repairs, upgrades, and modifications addressed deficiencies, in order to prepare the building for occupancy. This included exterior concrete wall repairs, demolition and removal of some interior components, and installation of new components (doors, walls, ceiling), repairs and upgrades to existing plumbing, and repairs and upgrades to the HVAC system.

A geotechnical study was conducted on the grounds around Building 104 to determine soil bearing capacity and water table information. This involved a series of bores 6 inches and 18 inches deep and one 40 foot-deep bore and was a one-time event.

Building 104 will be occupied by Navy personnel and contractors operating the fixed and mobile emitter systems, which would be located next to, and housed within, the building. Operation of the emitter could occur up to 9 hours/day. Only established roads at Pacific Beach would be used to access Building 104.

Keyport Division NUWC surf zone testing support: The Keyport Division of the Naval Undersea Warfare Center intends to use the grounds at Pacific Beach for equipment and personnel staging, in support of the surf zone operating area on the beach below the installation. They would use various buildings, the fenced area at Building 104, and a helicopter landing pad at Pacific Beach for staging equipment and personnel for surf zone activities. Existing roads at either end of the installation, but not on the Pacific Beach property will be used for beach and surf zone access. The average number of days that Pacific Beach would be used for surf zone activities will be about 30 per year.

Morale, Welfare, and Recreation (MWR) program operations and activities - Aside from Building 104, Building 105 and the fenced area around these buildings, the installation lands are devoted to recreation and associated support functions provided by MWR. This includes hotel and rental house overnight visits, RV camping, tent camping, dining at a restaurant, a basketball court, bowling alley and recreational center. Morale, Welfare, and Recreation sponsors various events throughout the year such as a Veteran's Day dinner, kids carnival, Thanksgiving dinner and other seasonal activities.

Guests staying at Pacific Beach can access the ocean beach on foot through gates at the north and south ends of the installation. The south gate leads to the Pacific Beach State Park, the north gate leads to a road off the installation that goes to the beach.

The installation is used as a central base for recreationists pursuing activities on the beach or in the general area such as clam digging, whale watching, fishing on nearby rivers or ocean surf fishing, hunting, day trips to the Olympic Peninsula rainforest and to the Grays Harbor Shorebird Festival in Hoquiam. The town of Pacific Beach holds recreational events and festivals throughout the year and qualifying guests can stay at the installation while participating in these events.

The grounds are maintained; the lawn is regularly mowed and vegetation trimmed as needed.

Other activities - Perimeter brush cutting – Every 4 to 5 years, the salal, blackberry, salmonberry, and other vegetation along the fenceline bordering the bluff is cut back to prevent encroachment onto the installation grounds (Figure 10). The general prescription is to trim vegetation to 48 inches high as far out as necessary to maintain a level plane of trimming towards the Pacific Ocean and to cut vegetation to ground level in the first 18 inches behind the fence. Plant roots are left intact so that the vegetation grows back and the potential for erosion is reduced.

Figure 10. Vegetation encroaches along the installation's fence.

Periodic examination of the communication cables – The cables are not in service and are not presently part of a military mission. They are generally inspected every 4 to 5 years, however the portion inspected is not on the Pacific Beach property. The cable segments from the shore out to about the 100ft water depth are checked using landbased and submarine diver surveys. The scope of this work includes determining the cables' buried depth and identifying compromising conditions of the cable such as abrasion, corrosion, deterioration, breaks, etc. This work requires diving for visual inspection, use of a tracking instrument and side scan sonar, and hand removal of rocks or other objects around the protective bird cage armor to verify the cable's condition underneath.

The cables are under the purview of the U.S. Navy Seafloor Cable Protection Office (NSCPO). Future inspections or other actions concerning the cables would originate from this office.

The cables were last inspected in 2010. Prior to the inspection, Naval Station Everett communicated with the Olympic Coast National Marine Sanctuary on this activity and a CATEX was prepared. (Documents on file at NAVFAC Public Works Environmental office, Everett, WA).

The cables at Pacific Beach have not been extensively studied because there are no proposals to remove them, replace them, or use them for a different purpose; all reasons that would prompt focused study. The environmental effects of other Navy undersea cables and other similar cables (e.g., telecommunication cables, acoustic research cables) have been studied. Continued research on the fate of seafloor cables in the environment, including combined field and laboratory studies are planned for Navy cables, along with more detailed examinations of cables in the environment and their associated biological communities (NAVFAC 2010).

Conclusions from environmental studies note that whether an undersea cable is active, failed, or decommissioned, there is no known risk or damage caused by the cable to the in situ benthic environment. Submerged cables that are not buried in sediment but are otherwise stable over time tend to become encrusted with a community of marine organisms resembling that which occurs on natural hard-bottom and artificial structures under equivalent conditions in the same region (NAVFAC 2010). Leaving cables in place provides habitat for marine organisms, and cable removal can do more harm than good by removing and damaging attached sea growth and

the sea floor (NAVFAC 2010). A study by Kogan et al. (2003) found overall numbers of marine organisms (ribbon worms, segmented worms, starfish, urchins, shrimp, etc.) to be significantly greater on or immediately adjacent to a cable than in comparable areas away from the cable. Underwater tracking range cables at St. Croix, which were installed between 1964 and 2001, were found to be heavily encrusted with coral reef organisms and to provide habitat for plants, invertebrates, and fishes (NAVFAC 2004).

Kogan et al. (2006) studied a cable placed for scientific research (acoustic) purposes in California eight years after installation. There were very few effects of that cable on epifaunal or infaunal organisms from the continental shelf to the deep-sea, including sediment-dominated and rocky sites. Kogan et al. (2006) noted accumulations of shell hash near the cable, which were possibly due to subtle hydrodynamic effects of the cable on the local environment.

Potential long term impacts of cables left on the sea floor can include:

- Likely continued abrasion of nearshore rock outcrops by the cable.
- Continued colonization of the cable by organisms, especially anemones in soft-bottom habitats.
- Potential entanglement with fishing gear.
- Potential impacts of repair operations, including risks of entanglement to marine mammals. (Kogan 2003, NAVFAC 2010)

If the removal or use of the cables at Pacific Beach is proposed in the future, the environmental effects would be analyzed, including specifically effects to bull trout and the bull trout designated critical habitat encompassing the nearshore below the Pacific Beach installation, and the appropriate level of NEPA analysis conducted.

Facilities maintenance – Buildings and facility infrastructure at Pacific Beach are repaired and maintained as deficiencies are identified and funding is available.

Typical work includes:

- Access door and exterior door replacements
- Interior renovations to address leaks and mold
- Roof and gutter repairs and replacement
- Removal of asbestos-containing abandoned piping
- Installation of a propane heating tank
- Repair of non-working street lights,
- Installation of heat pumps on the rental houses.
- Repairs to water supply lines at the RV parking area
- Inspection of the sanitary sewer line
- Repairs to electrical systems

Stormwater management – Work was conducted most recently in 2010 to address surface water runoff and deficiencies in the storm drain system. Activities were undertaken to reduce surface runoff down the face of the bluff, which contributes to erosion. This work included:

- Repairs to storm drain pipes; and installation of new sections of storm drain pipe.
- Visual inspection and cleaning of the entire storm drain system.
- Installation of catch basins and piping to route runoff downslope to the flat area at the railroad grade.
- Creation of a swale along the top of the bluff to capture runoff.
- Installation of erosion control fabric.
- Planting of native vegetation where ground disturbance occurred.

Work of this nature could occur in the future, should additional measures be needed to address surface water runoff and erosion.

2.1.6 Natural Resources Constraints

There are no locations at Pacific Beach where the limited extent of military activities or the current recreational activities are restricted because of natural resource issues. Under current environmental conditions, there will be no net loss to the Navy mission or training exercises attributable to natural resource conditions on the Pacific Beach property, including the proposed installation and operation of a fixed emitter and upland support activities related to the surf zone testing described in Sections 1.7 and 2.1.5.

The out-of-service communication cables extending into the Pacific Ocean are available for future use. The cables will be left in-place, so that existing conditions along the upland and submerged length of the cables will not be affected.

Should the bluff continue eroding, it could eventually cause a loss of landbase to the extent that activities on the installation are affected.

2.1.7 Natural Resources Opportunities

Most of the open land at the installation is potentially available for natural resource opportunities, provided adequate habitat is available, however aside from the bluff face, all lands are developed with buildings, lawns, and ornamental vegetation. There are opportunities to plant native vegetation or establish designated garden areas at the installation and to promote awareness of migratory birds to visitors.

Figure 11. A gazebo offers a protected location for wildlife viewing.

An existing gazebo/observation platform equipped with "big eyes" binoculars creates an opportunity to look for migrating shorebirds, whales and other wildlife on the beach below and in the ocean (Figure 11).

2.2 General Physical Environment

The 52-acre Pacific Beach property sits on an exposed coastal bluff approximately 40 to 60 feet above the tidelands of the Pacific Ocean (see cover photo). The developed portion of the property within the fenceline is essentially flat; sloping gradually towards the south. To the west, beyond the fence, the Navy-owned property extends part way down the steep bluff face. This area (about 10 acres) is heavily vegetated, but is also prone to erosion.

2.2.1 Climate/Weather

The maritime climate of western Washington is characterized by heavy rainfall and mild temperatures. Point Grenville, about 9 miles north of Pacific Beach, receives an average of 86.15 inches of precipitation per year (http://www.wrcc.dri.edu/cgi-bin/cliMONtpre.pl?wa6584) and has an average annual temperature range between 42.6 and 55.5 degrees Fahrenheit. Grays Harbor County receives an average of 3.5 inches of snow per year.

At Pacific Beach:

- On average, the warmest month is August.
- The highest recorded temperature was 101°F in 1988.
- The average coolest month is February.
- The lowest recorded temperature was 4°F in 1989.
- The maximum average precipitation occurs in November.

http://www.weather.com/weather/wxclimatology/monthly/graph/98571

2.2.2 Climate Change

Climate can be considered the "average weather" in a given place, including the patterns of temperature, precipitation (rain or snow), humidity, wind and seasons. Climate patterns play a fundamental role in shaping natural ecosystems and the human economies and cultures that depend on them. It is widely recognized that the earth's climate is rapidly changing, resulting in disruptive impacts, and past climate patterns are no longer reliable predictors of the future climate. Climate change is progressing faster now than that experienced in the last 2,000 years (WDOE 2012).

Climate change is the result of rising levels of carbon dioxide and other heat-trapping gases (greenhouse gasses) in the Earth's atmosphere. These increased levels are warming the Earth, resulting in rising sea levels; melting snow and ice; more extreme air temperature events, fires and drought; and more extreme storms, rainfall and floods. Scientists project that these trends will continue and in some cases accelerate, posing significant risks to human health, Washington's forests, agriculture, freshwater supplies, coastlines, and other natural resources vital to the state's economy, environment, and quality of life (WDOE 2012).

In Washington, physical and chemical effects of climate change, particularly sea level rise, are expected to manifest themselves in 5 primary ways (from Littell et al. 2009):

Inundations – regular flooding of the lowest lying areas by high tides.

Flooding – more extensive flooding due to the compounding of sea level rise on storm surges.

Erosion and Landslides – an acceleration of bluff and beach erosion caused when sea level rise exacerbates erosion that occurs naturally during storm events.

Saltwater Intrusion – an intrusion of salt water into coastal freshwater aquifers as sea level rises.

Increased Ocean Surface Temperature and Acidity – increase in ocean temperatures due to warmer air temperatures, and the absorption of carbon dioxide by ocean waters leading to increased acidity.

On Washington's outer coast including the Pacific Beach area, sea level rise, more extreme ocean storms and wave energy (storm surge), and the effect these can have in accelerating bluff erosion are significant impacts of climate change. On the Pacific coast of Washington there is evidence that shifting storm tracks and increased wave heights have begun eroding beaches south of Point Grenville (Littell et al. 2009 citing others).

2.2.3 Geology

Pacific Beach is located within an active earthquake and tsunami zone and is within an area considered to be at moderate risk for earthquakes. The location of the property; on a bluff above the ocean, would afford some protection from a tsunami. A modeled tsunami inundation map created by Washington Department of Natural Resources (Walsh et al. 2000) indicates that the beach below the bluff and lower elevation areas south of the installation would be inundated with water in a tsunami but the bluff where the installation sits would not.

Erosion Hazards - There are erosion hazards in terms of public safety and loss of installation land, because the bluff on which the installation was constructed is susceptible to natural erosion processes which may be exacerbated by surface runoff from the installation. Slope failures have occurred along the western edge of the property (Figure 12).

Figure 12. Erosion and slope failures on the bluff.

On the steep portions of the cliff, shallow earth masses occasionally detach and slough off due to the constant weathering forces of wind and rain. On the relatively flat installation surface, downward percolation of rain is arrested by a thick layer of clay with slow permeability. This causes soil saturation and subsequent weakening of the overlying soil structure. Erosion occurs when the top soil layers become oversaturated and fail.

Over the years, studies have been undertaken and projects have occurred to improve surface drainage and address bluff erosion (e.g., NAVFAC 1976, Twelker and Associates 1978, USDA-SCS 1982). Most recently, in 2010, work was performed (described above) to collect surface runoff and convey it downslope in a manner that reduces erosion of the bluff face.

Soils - The Soil Conservation Service published a "Soil Survey of Grays Harbor County Area, Pacific County, and Wahkiakum County Washington" in 1986 (Pringle 1986). Only the soil series Halbert muck, is found within the Pacific Beach property. This soil series is characterized as shallow and poorly drained. Typically, in undisturbed conditions, the surface is covered with a mat of needles and twigs about 5 inches thick. The upper layer is black muck about 11 inches thick. The next layer is silty clay loam about 15 inches thick over a indurated, continuous iron

pan about 1 inch thick. The next layer is silty clay loam about 7 inches thick. Below this to a depth of 60 inches or more is extremely gravelly sandy loam. Depth to the iron pan ranges from 20 to 40 inches below the surface of the muck. Permeability of this soil series is moderately slow above the iron pan and very slow through it. Available water capacity is high. Runoff is slow or ponded.

The majority of the fertile upper layer of Halbert muck soil was removed during the original construction of the installation, leaving infertile subsoil as the topsoil.

2.2.4 Hydrology

Surface water – There are no lakes, ponds, or streams on the property. Rainfall runoff from buildings and impervious surfaces such as roads and parking lots discharges directly onto the ground and becomes overland flow, infiltrates the ground, or becomes standing water which ultimately infiltrates slowly.

Surface runoff is managed through foundation drains on some buildings which are connected to the storm/sewer system. The sewer system also receives surface water runoff from the main access road, and other roads. Building 104 has a foundation drain and sump drains which collect runoff and are routed to an outfall which daylights on the bluff face near the private railroad grade.

Groundwater - The majority of surface runoff infiltrates to a depth of 15-20 feet, where there is a clay layer that slows the infiltration of water; causing it to accumulate and flow in one direction. Groundwater flows east to west, following the land contour. A zone of saturated, weakened soil exists in the bluff along the west boundary of the installation.

2.3 General Biotic Environment

The installation by itself does not provide large, unaltered landscapes, vegetation, or habitat for key indicator species or populations of species. The immediate surrounding area has not been identified as containing unique coastal features or areas of special ecological value beyond that of the larger coastal area.

Using the classification developed by NatureServe (Comer et al. 2003) the installation is within the North Pacific Seasonal Sitka Spruce Forest ecosystem (unique identifier CES204.841).

Because the installation is about 52 acres in size and the land developed with no remaining natural vegetation, it does not contribute intrinsically to the ecosystem, nor does it negatively influence or alter its function.

2.3.1 Threatened and Endangered Species and Species of Concern.

No Threatened or Endangered species or species of concern occupy lands on the installation; no suitable habitat exists because installation lands are all developed. No critical habitat has been designated by the USFWS on the installation.

Several species described by WDFW (2013) could be occasional visitors to the installation or the adjacent coastal waters:

Marbled Murrelets (Federal and State Threatened) could fly over the installation during nesting season when the birds are traveling between inland nesting sites and nearshore waters to forage for fish to feed their young. The nesting period was recently evaluated specifically for Washington, and is defined as extending from April 1 to September 23 (USFWS 2012). During the winter non-nesting period, the birds are at sea and feed generally on fish and invertebrates in nearshore marine waters (USFWS 1997).

Marbled murrelet designated critical habitat. Critical habitat has been designated for the marbled murrelet and was revised in 2011 (76 FR 61599). The nearest designated critical habitat is about 14 miles northeast of Pacific Beach.

Snowy Plover (Federal Threatened, State Endangered). The Pacific coast population of the snowy plover breeds primarily above the high tide line on coastal beaches. Less common nesting habitats include bluff-backed beaches, dredged material disposal sites, salt pond levees, dry salt ponds, and river bars. In winter, snowy plovers are found on many of the beaches used for nesting as well as on beaches where they do not nest, in man-made salt ponds, and on estuarine sand and mud flats.

Snowy plover population numbers are very low. A range-wide breeding season survey in 2012 counted 1,855 adult western snowy plovers along the U.S. Pacific Coast. In 2013, the breeding adult population for the state of Washington was estimated at 43 birds (Pearson et al. 2014).

Southern Washington coastal areas represent the northernmost extent of current snowy plover distribution. Historically, five areas supported nesting snowy plovers in Washington, but that number has slowly declined to just two or three areas since 2009. The nearest occupied nesting areas documented in recent surveys (2011-2013) are in the Willapa Bay vicinity, more than 30 miles south of Pacific Beach. This is the northern extent of the species range.

Snowy plovers do not occur on the beaches below the Pacific Beach installation. Should populations increase in the future there may be potential nesting habitat on these beaches that could be used by this species.

Snowy plover designated critical habitat. Critical Habitat has been designated for the snowy plover (77 FR 36727). The nearest designated critical habitat is about 5 miles south of Pacific Beach at Copalis Spit however this area has not been used for nesting in recent years (Pearson et al. 2014).

Streaked Horned Lark (Federal Threatened, State Endangered). The streaked horned lark is a rare endemic subspecies found only in western Washington and Oregon. It is a distinct subspecies of the horned lark, a ground- dwelling passerine that prefers open grassland habitat. In Washington, the streaked horned lark nests on grasslands and sparsely vegetated areas at airports, sandy islands and coastal spits. The streaked horned lark was once abundant on Puget Sound prairies, but has become increasingly rare with the decline in habitat and is now restricted to a few large open grassland sites in Washington.

Current known nesting areas on the Washington coast are in the Willapa Bay and Grays Harbor areas; about 15 miles or more from Pacific Beach. This represents the northern most distribution of the species on the Washington coast. Population estimates indicate that there are probably fewer than 1,000 streaked horned larks remaining, with about 330 birds breeding in Washington (WDFW 2013).

Streaked horned larks do not occur at the Pacific Beach installation, nor on the beaches below. Should populations increase in the future there may be potential nesting habitat on the beaches that could be used by this species.

Streaked horned lark designated critical habitat. Critical habitat has been designated for the streaked horned lark (76 FR 61506). This includes specific areas at Grays Harbor and Willapa Bay, at least 15 miles south of Pacific Beach.

Chinook Salmon, Steelhead, Bull Trout (Federal Threatened, State Candidate). During the ocean phase of their life cycle, these species would occur in the ocean waters west of the installation boundary. There are no streams on the installation, so no occurrence of these species.

Bull trout designated critical habitat. Critical habitat has been designated for bull trout and was revised in 2010 (75 FR 63898). It includes the marine nearshore areas west of the installation and a stream (Joe's Creek) about ½ mile south of the installation. There is no designated critical habitat on the installation because there are no streams. The out-of-service communication cables extend west from the installation into the nearshore and beyond; within the designated marine critical habitat for bull trout.

Leatherback Sea Turtles (Federal and State Endangered) regularly occur off the coast of Washington during the summer and fall when large aggregations of jellyfish form; on which the turtles feed.

Brown Pelicans (Federal Species of Concern, State Endangered) occur on Washington's outer coastal waters, mainly from late April through October.

Common loons (State Sensitive) winter on Washington's coastal marine waters. Most of these birds nest in Alaska and Canada.

Peregrine Falcon (Federal Species of Concern, State Sensitive) distribution in Washington includes coastal areas just north of Pacific Beach.

Bald Eagles (Federal Species of Concern, State Sensitive) can be found year round in forested environments. They have been observed perched in trees to the north of the installation.

Gray Whales (Eastern North Pacific stock, State Sensitive) can occasionally be viewed from the installation. In Washington, the southbound migration peaks in December, and the northbound in late March to early April, then again in May through early June (when most females with calves pass by).

2.3.2 Wetlands

Indicators of wetlands are hydric soils (soils that are saturated, flooded, or ponded long enough during the growing season to develop anaerobic conditions that favor the growth and regeneration of hydrophytic vegetation), hydrophytic vegetation (vegetation that has adapted to living in aquatic environments and that occur where at least the root zone of plants are seasonally or continually found in saturated or submerged soil) and hydrologic characteristics (areas that are periodically inundated or have soils saturated to the surface at some time during the growing season, and areas with evident characteristics of wetland hydrology, i.e., those where the presence of water has an overriding influence on characteristics of vegetation and soils due to anaerobic and reducing conditions, respectively). Such characteristics are usually present in areas that are inundated or have soils that are saturated to the surface for sufficient duration to develop hydric soils and support vegetation typically adapted for life in periodically anaerobic soil conditions (U.S. Corps of Engineers 1987).

Wetlands generally include swamps, marshes, bogs, and similar areas such as sloughs, potholes, wet meadows, river overflows, mud flats, and natural ponds. The Navy has not conducted a wetlands classification of the Pacific Beach property however the land within the fenced portion of the installation consists of established expanses of lawn grass and do not contain wetland indicators; there are no areas that exhibit characteristics of wetlands. The portion of the installation property that is outside the fence is in a more natural state than that within the fence and could potentially contain conditions indicative of wetlands.

2.3.3 Fauna; Other Fish and Wildlife Species

Because the installation is developed, there are not habitat conditions suitable for supporting populations of wildlife. Staff working at the Pacific Beach Resort report seeing deer, raccoons, mountain beaver, Canada geese, gulls, herons, bald eagles, hawk species, American crows, robins, Stellar jays, and barn swallows on the property.

Whales of several species can occasionally be sighted along the coast from the installation during their migrations.

Migratory birds - Pacific Beach is within the Pacific flyway; a north-south route for many migrating bird species traveling between northern breeding grounds and southern wintering areas. Pacific Beach lies to the south of the Olympic Peninsula, which is dominated by 60–100-year-old Douglas fir forests with some trees well over 150 years old. A number of neotropical migratory birds breed primarily in these conifer forests and may be occasional visitors to Pacific Beach as they migrate between this breeding habitat their and southern wintering areas. These species include olive-sided flycatchers, Cassin's vireo, Townsend's warbler, and the western tanager. Black-headed grosbeak, rufous hummingbirds, Pacific-slope flycatchers, Swainson's thrush, house wrens and other species could also potentially be transient visitors to the installation because of nearby habitat. Birds that have been observed on the installation are listed above.

The most recent Birds of Conservation Concern (BCC) list, published by USFWS (2008) identifies 32 bird species in the Northern Pacific Forest Region, which includes Pacific Beach. Some of these species may fly over or be occasional visitors to the installation.

There is little suitable cover or perching vegetation for birds at Pacific Beach. The trees and vegetation along the western and northern perimeter of the installation are likely used to some extent by migrating birds. The vegetation outside the fence may provide nesting habitat for songbirds. Migrating shorebirds such as Western sandpiper, Dunlin, short-billed and long-billed dowitchers and plover species use the ocean beaches adjacent to the installation during their migrations.

2.3.4 Vegetation

Pacific Beach is located in the North Pacific Seasonal Sitka Spruce Forest ecosystem (Comer et al. 2003). Sitka spruce, lodgepole pine, shore pine, and red alder are the predominant tree species in this ecosystem. Understory vegetation includes salmonberry, wax myrtle, salal, and native and non-native blackberry. Native trees and vegetation were removed from the Pacific Beach property longbefore there was a military presence (Figure 7). The majority of the trees were cut down in the early 1900's during construction of the Pacific Beach Hotel.

Vegetation on the installation presently consists mostly of lawn grass (Figure 13). Ornamental trees, shrubs, and grasses have been planted. Shore pines separate the individual RV sites in the RV camping area (Figure 14). At the north end of the installation there are a few tall spruce and pine trees (Figure 15). Within the main resort compound and housing areas there are no trees. There are ornamental plants (e,g, pampas grass)and evergreen shrubs near the buildings.

Figure 13. Most of the vegetation at Pacific Beach is lawngrass.

Figure 14. Shore pines separate RV parking sites.

A heavy growth of blackberries, fern species, salal, small pine and spruce trees, and other vegetation occurs outside the fenceline on the bluff bordering the coastal edge of the installation, in the ravines, and on adjacent lands (Figure 6).

In 2010, sitka spruce trees, salal, Pacific wax myrtle and evergreen huckleberry were planted in a work area along the top of the bluff outside the fence, where excavation occurred to address surface runoff and erosion.

Other than non-native blackberry, no evidence is apparent of invasive plants, such as Scot's Broom. The regular lawn mowing, maintenance of landscape plants, and perimeter brush cutting likely prevent invasive plants from becoming established within the installation fenceline.

Figure 15. Spruce and pine trees at the north end; mostly outside the installation boundary.

3. Environmental Management Strategy and Mission Sustainability

3.1 Cooperative Management

The Sikes Act allows for DoD to enter into cooperative agreements with the USFWS for the management of natural resources on DoD installations. The USFWS, the Navy and the WDFW each have mutual agreement signature authority for this INRMP. At the installation level, cooperative management is enabled via the annual INRMP review process, through the incorporation of technical information, integration of methods and goals from specific resource management and recovery plans. At the field level, cooperative management is facilitated through consultation on a project-by-project basis and through mitigation and monitoring agreements.

3.2 Supporting Sustainability of the Mission and the Natural Environment

No special natural resource management actions are presently needed to integrate the military mission and sustain existing and proposed military land use of Pacific Beach. There are no existing natural resource features within the installation property that impact the limited scope of proposed mission-related activities described in Sections 1.7 and 2.1.5. Implementation of this INRMP will ensure proper management of natural resources while sustaining the military mission activities that support to the Northwest Training Range Complex.

The Environmental Division of NAVFAC's Public Works Department at Naval Station Everett will continue to provide technical oversight of mission-related activities at Pacific Beach. Supporting the elements of this plan will require not only that the INRMP be implemented, but that future growth and development is conducted in an environmentally sensitive way with cooperation between environmental, engineering, operational, and planning personnel.

3.3 Natural Resources Consultation Requirements

There are no threatened or endangered species, or designated critical habitat on the installation, which precludes, in most cases, the need for consultations under Section 7 of the ESA. Federal agencies are required by the ESA to manage federally listed threatened and endangered species and their habitat in a manner promoting conservation consistent with plans for recovery of such species. Section 7 of the ESA requires federal agencies to consult the USFWS and NMFS whenever proposed actions "may effect" ESA- listed species. The Migratory Bird Treaty Act provides regulations prohibiting the taking, selling, transporting, and importing migratory birds, nests, parts, or products, and provides enforcement and penalties for violations. This protection extends to all species of waterfowl, shorebirds, raptors, woodpeckers, etc. and nearly all songbirds. In North America the European starling, rock dove, and house sparrow are not protected under this Act.

Marbled murrelets, snowy plover, streaked horned lark and other migratory birds could potentially be exposed while in flight to effects of some activities (e.g., testing and operating the fixed emitter). Future proposed projects, operations, or other actions (those not already covered in existing NEPA documents and consultation records) that would potentially affect birds listed under the ESA or migratory birds would be evaluated through a formal review process in consultation with the USFWS under Section 7 of the ESA and the Migratory Bird Treaty Act. Otherwise, written documentation that there are no effects to TES species will be generated by the Natural Resources Manager and kept with the project files.

This INRMP can be used as a tool to identify the extent of natural resource conditions and potential impacts of planned Navy actions on endangered or threatened species at an early stage and to provide a basis for altering the action to prevent or minimize those impacts.

The USFWS may require changes or mitigation that could result in delays and additional costs. Because of this, it is imperative that the Command initiate early environmental/natural resources review of proposed actions, in order to assess risks, develop alternatives, and correctly identify mitigation costs both in terms of time and dollars.

3.4 NEPA Compliance

The NSE Public Works Department's Environmental Division will review individual projects proposed at Pacific Beach to determine the appropriate level of analysis under NEPA, whether a categorical exclusion (CATEX), an Environmental Assessment (EA), or an Environmental Impact Statement (EIS).

NEPA (42 USC § 4321 et seq.) requires that federal agencies evaluate the impacts of their proposed actions on the quality of the human environment. The Navy's policies regarding NEPA, including OPNAV M-5090.1, the Secretary of the Navy Instruction 5090.6A, Environmental Planning for Department of the Navy Actions (26 April, 2004), and the Navy's Supplemental Environmental Planning Policy (23 September 2004), emphasize that environmental planning is necessary and most effective at the earliest stages of project development. The Navy recognizes the NEPA process includes the systematic examination of the likely environmental consequences of implementing a proposed action. To be an effective decision-making tool, the Navy integrates the process with other Navy project planning at the earliest possible time. This ensures that planning and decision-making reflect environmental values, avoid unnecessary impacts, avoid delays, and avoid potential conflicts.

Project planning and review is achieved through an environmental review process which requires all new projects, programs, and operations, or changes to existing projects, programs, and operations, be reviewed by the NRM for potential impacts to the environment. The NRM reviews planned actions, identifies the risks to natural resources, and provides comments and/or

alternatives to the action proponents that will minimize or eliminate the risks, if possible. The early review process also allows the NRM an opportunity to identify the appropriate level of NEPA analysis.

An established procedure is in place within NAVFAC NW Environmental Division at NSE which requires the project proponent to complete and submit an "Environmental Checklist" and provide adequate detail to discern potential impacts. Depending on the scope of the proposed project, more information may be collected from the project proponent via phone and email, beyond that provided initially.

Requirements (prescriptions/conditions of approval) for projects or plans are prepared and documented, including media-specific Best Management Practices (BMP) and prudent limitations. Environmental Protection Plans are generally required for projects, and reviewed by Environmental Division staff to verify environmental compliance and standards are met. The NRM consults with other agencies in order to obtain necessary approvals, permits and concurrences, and incorporates conditions and limitations imposed by agencies as requirements to the projects.

3.5 Beneficial Partnerships and Collaborative Resource Planning

The Coastal Observation and Seabird Survey Team (http://depts.washington.edu/coasst/) organizes coastal residents to monitor beach-cast seabird carcasses at over 350 sites in California, Oregon, Washington and Alaska, including sites near Pacific Beach. Resulting data advances the science of coastal ecology and contributes to natural resources management. There is an opportunity to coordinate with this team, periodically participate in the counts in the vicinity of Pacific Beach, and use data for local management.

At the installation level, collaborative planning is achieved through the annual INRMP Review and Revision process described in Section 1.9. Additionally, as appropriate, the Navy may incorporate technical information, methods, and goals from specific species or resource management and recovery plans originating with USFWS and WDFW.

Aside from the existing partnerships with USFWS and WDFW in implementing the Sikes Act through development of this INRMP, there have been a number of relationships built over time which have contributed to improved natural resources management on the installation:

Partners in Flight: The NRM will maintain contact with the DoD Partners in Flight program in order to remain aware of project and program opportunities as they develop.

Partners in Amphibian and Reptile Conservation (PARC): The NRM will maintain contact with PARC in order to remain aware of project and program opportunities as they develop.

Native American Tribes: The NRM will coordinate with the NSE's Cultural Resources PM in order to maintain contact with the Hoh Tribe, Makah Tribe, Quileute Nation, and Quinault Indian Nation and their staff. This will promote a positive relationship and cooperation regarding cultural and natural resources issues.

Grays Harbor County Public Work, Surface Water Division: The NRM will maintain contact with the County Public Works Department in order to remain aware of project and program opportunities as they develop, or how allowing on-going access to the installation may continue to assist in this effort.

The Installation Commanding Officer, tenants, operations personnel, and other installation personnel have an influence on environmental conditions at Pacific Beach; they become part of the solution by working with the NRMs and integrating their perspectives within the management process of the installations and implementation of this INRMP.

The Olympic Coast National Marine Sanctuary is part of the Pacific Northwest Marine Mammal Stranding Network, and there are two USFWS National Wildlife Refuges located north and south of Pacific Beach. Although Pacific Beach has limited habitat availability, the Navy will coordinate with USFWS to protect migratory species that may land at the Pacific Beach installation.

3.6 Public Access and Outreach

Aside from the public review component of the NEPA process related to Northwest Training Range Complex proposed actions, opportunities and the need for public outreach regarding mission-related operations or natural resources management at Pacific Beach are limited.

The Pacific Beach installation is not gated or secured, so is accessible to the general public, however guests using the resort amenities must be active duty or retired military personnel, or DoD civilian employees. The only restricted area is in the vicinity of Building 104, which is fenced, where the sound surveillance system mission previously occurred and where new operational activities are proposed in support the Northwest Training Range Complex.

Since there is no Natural Resource Manager on-site, there are limited opportunities for public outreach efforts to promote natural resources. However the NRM at Naval Station Everett will periodically coordinate with MWR staff at Pacific Beach to add natural resource components to MWR-sponsored events. Through MWR programming efforts, the NRM and Everett Environmental Division will work to promote various events, including:

- International Migratory Bird Day
- The Great Backyard Bird Count
- Pacific Coast Whale Migration Watching

- Annual Spring/Fall Bird Migrations
- Grays Harbor Shorebird Festival

A project is proposed in this INRMP to create and maintain environmental education signs or brochures that promote natural resources awareness (EPR # 68967NR010).

3.7 Encroachment Partnering

With the existing and proposed levels of mission-related activities, no encroachments by the Navy at Pacific Beach are expected that would affect adjacent lands or require specific partnering. There is no known situation where Navy encroachment onto neighboring lands would occur. Nor are there situations where others are encroaching on the Pacific Beach property, to the point that it is putting mission activities at risk.

At the north end of the installation, there are encroachment concerns from private residential development. In 2010, a commercial developer built approximately 5 homes partially on the Navy boundary. This affected surface stormwater runoff; flooding the Navy property within the RV parking area.

The railroad grade bisecting the property to the south and along the western boundary is privately owned. There may be concerns with future property development in this area along the base of the bluff, which would exacerbate existing erosion.

4. Natural Resource Management

4.1 Threatened and Endangered Species, Critical Habitat, and Species of Concern

Table 1. Four threatened species can potentially be found in the general vicinity of the Pacific Beach installation.

Species	Status	Citation	Designated Critical Habitat	Primary Habitat
Marbled Murrelet (*Brachyramphus marmoratus*)	Federal - Threatened State - Threatened	10/01/1992 (57 FR 45328)	10/05/2011 (76 FR 61599)	Open ocean; inland in old growth forests
Western Snowy Plover (*Charadrius alexandrinus nivosus)*	Federal - Threatened State - Endangered	03/05/1993 (58 FR 12864)	06/19/2012 (77 FR 36727)	Broad open beaches, salt flats, dry mud flats
Streaked Horned Lark (*Eremophila alpestris strigata)*	Federal - Threatened State - Endangered	10/03/2013 (78 FR 61451)	10/03/2013 (78 FR 61505)	Fields, prairies, upper beaches, areas with sparse grass vegetation
Bull Trout (*Salvelinus confluentus*)	Federal - Threatened State - Candidate	11/1/1999 (64 FR 58910)	10/18/2010 (75 FR 63898)	Marine waters, freshwater rivers and streams

4.1.1 Marbled Murrelet

The marbled murrelet is a small alcid with sooty brown to brownish-black upper parts, rusty margins on the back feathers, and reddish scapulars (Carter and Stein 1995). During the breeding season it has dark brown to blackish upper parts and a white belly and throat that are greatly mottled. In winter the upper parts become gray, dark marks form on the sides of the breast and a white ring develops around the eye. Males and females are similar in appearance and size. Juveniles are similar to adults in winter plumage, but with dusky mottling on the under parts (NatureServe 2014).

The marbled murrelet spends the majority of its life on the north Pacific Ocean across a range extending from the Aleutian archipelago across southern Alaska and south as far as Santa Cruz County in central California (NatureServe 2014). Nesting occurs inland from the Aleutian Islands south through British Columbia, Washington, and Oregon, and into central California (U.S. Fish and Wildlife Service 2011d).

Marbled murrelets forage in near-shore areas for small fish, invertebrates and other small prey. They generally forage in waters within 1 mile of the shore (Kuletz and Marks 1997) out to depths of about 1,300 feet and are reported to dive at least 90 feet deep, based on their capture in a gillnets set at this depth (U.S. Fish and Wildlife Service 1997). The species' wintering range is poorly documented but includes most of the marine areas used for foraging during the breeding season (Nelson 1997). Physical and biological oceanographic processes that concentrate prey (such as upwelling and rip currents) influence the foraging distribution of marbled murrelets (Ainley et al. 1995, Burger 1995, 2001, Day and Nigro 2000, International Union for the Conservation of Nature and Natural Resources 2010).

Marbled murrelets are unique among alcids in their use of old-growth forest stands for nesting. During nesting season (April into September) marbled murrelets travel inland to old growth, heavily forested areas (U.S. Fish and Wildlife 2009). Nesting habitat is characterized by large trees, multiple canopy layers, and moderate to high canopy closure. Marbled murrelets do not construct nests but use natural features such as moss, branch deformities, clumps of mistletoe, or piles of needles as nest sites on tree limbs (International Union for the Conservation of Nature and Natural Resources 2010). The presence of these features for nesting platforms is the most important characteristic of their nesting habitat, which is found in large conifers such as coastal redwood and western hemlock in areas close enough to the ocean for the birds to fly to and from nest sites; typically within 35 miles of marine waters. Nests have been found as far as 50 miles inland in Washington. The female lays a single egg and both adults alternate incubating the egg for about 30 days. After hatching, the young fledge after about 28 days and appear to fly directly to the sea.

Marbled murrelet populations are experiencing significant population declines in the Pacific Northwest, primarily because of the removal of essential forest nesting habitat by logging and coastal development (Wahl et al. 2005). Gill-net fisheries and oil spills have also contributed to population declines.

Six marbled murrelet conservation zones have been designated by the USFWS. The murrelet population on the Olympic Peninsula is a part of Conservation Zone 2 which encompasses the outer coast of Washington. In Conservation Zones 1 through 5 combined, which includes northern California, Oregon, and Washington, there are an estimated 17,800 birds, with the

lowest average at-sea density among the five zones located on the outer coast of Washington (Conservation Zone 2) (U.S. Fish and Wildlife Service 2009; Falxa et al. 2009).

The marbled murrelet is listed as threatened under ESA, and critical habitat has been designated on the Olympic Peninsula (Figure 16). WDFW has detected birds during the breeding season approximately 3,280.8 ft. from Pacific Beach (Washington Department of Fish and Wildlife 2013).

No specific conservation management is proposed because neither marbled murrelets nor marbled murrelet habitat occur on the installation. However, because they could potentially be exposed to effects from certain mission-related activities when they are in flight (e.g., testing and operating radar emitting equipment), individual projects will be evaluated for potential effects to marbled murrelets and appropriate consultations conducted with USFWS under Section 7 of the ESA.

Effects from installation and operation of the proposed fixed emitter at Building 104 were analyzed in the Pacific Northwest Electronic Warfare Range EA (U.S. Navy 2014). Consultation with USFWS under Section 7 of the ESA will determine if avoidance, minimization, or mitigation measures are needed.

Effects to marbled murrelet from Navy training and testing were analyzed in documents prepared under NEPA for the Northwest Training Range Complex (U.S. Navy 2015), Pacific Northwest Electronic Warfare Range (U.S. Navy 2014), and the Keyport Range Complex Extension (U.S. Navy 2010b).

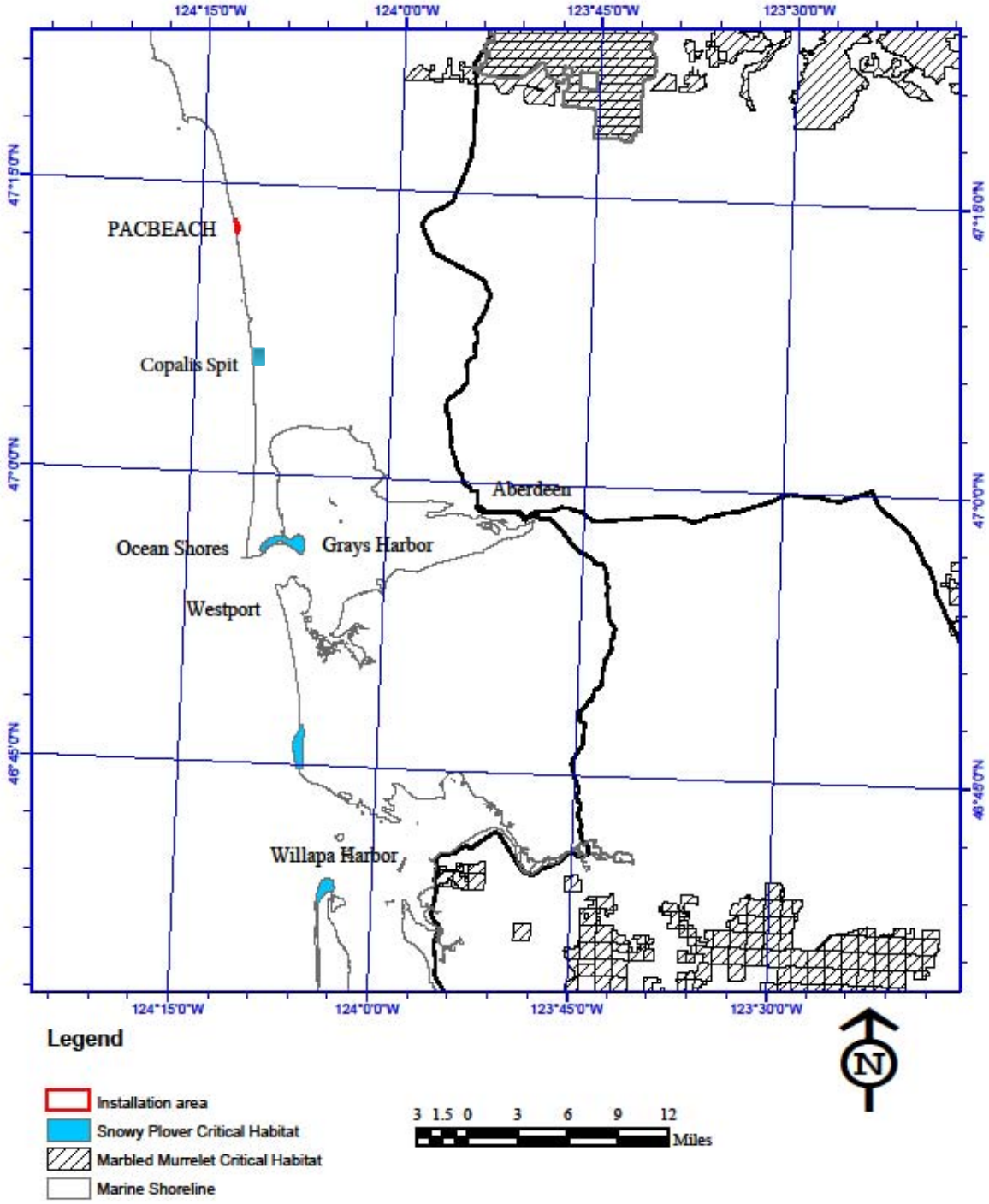

Figure 16. Snowy Plover and Marbled Murrelet Designated Critical Habitat near Pacific Beach.

4.1.2 Snowy Plover

The western snowy plover is a small wading shorebird with a sand-colored back, white underside, thin dark bill, dark or grayish feet and legs, and (in adults) a partial breast band and dark ear patch (females may lack the black areas in the plumage); immature plovers have light edges on the back body feathers, resulting in a scaly pattern. These birds eat insects, crustaceans, mollusks, worms, and other minute invertebrates. They pick food items from the substrate, probe in sand or mud in or near shallow water, and sometimes use their foot to stir up prey in shallow water (NatureServe 2015).

Western snowy plovers have a large but discontinuous range extending from North America to South America; populations are scattered and declining in many areas due to habitat degradation and loss, disturbance by humans, and/or impacts of non-native and native predators. Much of the plover's current overall population is concentrated in relatively few areas.

The Pacific coast population of the western Snowy Plover breeds from southern Washington to southern Baja, California. The Pacific coast population is defined as those individuals that nest within 50 miles of the Pacific Ocean on the mainland coast, peninsulas, offshore islands, bays, estuaries, or rivers of the United States and Baja California, Mexico. In winter the birds may remain at their breeding sites or move north or south to other locations along the Pacific coast. Coastal beaches are the primary habitat used by these birds for breeding, foraging, and wintering (U.S. Fish and Wildlife Service 2007).

Nesting birds can be either year-round residents or migrants. In southern Washington, migrants begin arriving in early March and birds may continue arriving until early June. The nesting season extends from March to late September. In Washington, most adults arrive in late April with maximum numbers of birds present from mid-May to late June. Fledging occurs from late June through August (USFWS 2007).

The plover nests typically are established in flat, open areas where vegetation and driftwood are sparse or absent. The plover does not construct a nest, rather the eggs are laid in a "scrape"

constructed by the males in the sand or substrate. The male leans forward on his breast and scratches his feet while rotating his body, creating a depression. The depression is lined with beach debris (pebbles, shell fragments, plant debris).

The historical breeding and winter range for the Pacific coast population extended south from Copalis Spit in southern Washington along the Pacific Coast of Oregon and California to southern Baja California. Historically, five areas supported nesting plovers in Washington (Pearson et al. 2013), with Copalis Spit being the northernmost location. The Copalis Spit area historically supported 6–12 nesting pairs of plovers. However, as of spring 2012, nesting has not been documented here since 1984 (Pearson et al. 2013). Western snowy plovers were not documented at Copalis Point during winter surveys conducted from 2006 through 2012 (Pearson et al. 2012, 2013).

Habitat features important to the western snowy plover are sandy beaches, dune systems immediately inland of an active beach face, salt flats, mud flats, seasonally exposed gravel bars, artificial salt ponds and adjoining levees, and dredge spoil sites.

The snowy plover is listed as a threatened species under ESA. Critical habitat has been designated for the snowy plover (77 FR 36727). The nearest designated critical habitat is about 5 miles south of Pacific Beach at Copalis Spit (Figure 16) however this area has not been used for nesting in recent years (Pearson et al. 2014).

No specific conservation management is proposed because neither the species nor suitable habitat occur on the installation, and presently the nearest occupied nesting areas are 30 miles south of Pacific Beach.

Should populations increase to the point where the ocean beaches in the vicinity of Pacific Beach are used for nesting, individual projects would be evaluated for potential effects to snowy plovers and appropriate consultations conducted with USFWS under Section 7 of the ESA, and through the INRMP review process conservation measures would be developed in cooperation with USFWS.

Effects to snowy plovers specifically from Navy training and testing activities, including operational support activities at Pacific Beach, were analyzed in documents prepared under NEPA for the Northwest Training Range Complex (U.S. Navy 2014 and 2015).

4.1.3 Streaked horned lark

The streaked horned lark is a rare bird, endemic to the Pacific Northwest, and is a subspecies of the wide-ranging horned lark. Horned larks are small, ground-dwelling birds, approximately 6−8 inches in length. The streaked horned lark has a dark brown back, yellowish underparts, a walnut brown nape and yellow eyebrow stripe and throat. This subspecies is conspicuously more yellow beneath and darker on the back than almost all other subspecies of horned lark. The combination of small size, dark brown back, and yellow on the underparts distinguishes this subspecies from all adjacent forms.

Most Washington streaked horned larks over-winter in Oregon and begin to arrive at nesting grounds in late February. Nesting begins in late March and continues into June. Streaked horned larks nest on the ground in sparsely vegetated sites dominated by grasses and forbs in habitats such as native prairies, coastal dunes, fallow and active agricultural fields, wetland mudflats, sparsely vegetated edges of grass fields, and disturbed areas such as grazed pastures, gravel roads or gravel shoulders of lightly traveled roads, and airports. Nests consist of shallow depressions built in the open or near a grass clump and lined with fine dead grass. Habitat important for the streaked horned lark includes croplands, hedgerows, herbaceous grasslands and sand dunes. Habitat consists of large expanses of bare or thinly vegetated land, including fields, prairies, dunes, upper beaches, airports, and similar areas with low/sparse grassy vegetation (NatureServe 2015).

This subspecies of horned lark historically bred in prairie and open coastal habitats from the southwestern corner of British Columbia (southeastern Vancouver Island, lower Fraser River Valley) through the Puget trough and Willamette Valley (as far south as Eugene, Oregon) and into the Rogue River Valley; it was also found on open coastal habitats in western Washington.

Available evidence suggests that birds in the Puget lowlands are migrating south for the winter; multiple observations of banded birds throughout the winter in the Willamette Valley, Columbia River and on the Washington Coast suggest that some of these birds are staying in these regions throughout the winter (Pearson and Altman 2005).

The streaked horned lark has been extirpated as a breeding species throughout much of its range, including all of its former range in British Columbia, the San Juan Islands, the northern Puget

Trough, the Washington coast north of Grays Harbor, the Oregon coast, and the Rogue and Umpqua Valleys in southwestern Oregon (Pearson and Altman 2005). Recent site visits suggest that streaked horned larks in Washington currently breed on six sites in the Puget lowlands (one site on McChord Air Force Base, three sites on Ft. Lewis, Olympia Airport, and Shelton Airport), four sites on the coast (Damon Point, Midway Beach, Graveyard Spit, and Leadbetter Point and two sites on islands in the lower Columbia River (U.S. Fish and Wildlife Service 2010c).

An analysis of recent data estimates the current rangewide population of streaked horned larks to be about 1,170–1,610 individuals (Altman 2011). The largest known populations of streaked horned larks occur in Oregon in the southern Willamette Valley at the Corvallis Municipal Airport and on USFWS' Willamette Valley National Wildlife Refuge Complex.

The streaked horned lark is listed as threatened under ESA. Critical habitat has been designated for the streaked horned lark (76 FR 61506). This includes specific areas at Grays Harbor and Willapa Bay, at least 15 miles south of Pacific Beach.

No specific conservation management is proposed because neither the species nor suitable habitat occur on the installation, and presently the nearest occupied nesting areas are 15 miles south of Pacific Beach.

Should populations increase to the point where the beaches below the installation are used for nesting, individual projects would be evaluated for potential effects to the streaked horned lark and appropriate consultations conducted with USFWS under Section 7 of the ESA, and through the INRMP review process conservation measures would be developed in cooperation with USFWS.

Effects to streaked horned larks specifically from Navy training and testing activities, including operational support activities at Pacific Beach, were analyzed in documents prepared for the Northwest Training Range Complex (U.S. Navy 2014 and 2015).

4.1.4 Bull Trout and designated critical habitat

The bull trout is a wide-ranging trout native to Western North America. It is found in coastal rivers and high mountain streams in the Yukon Territory, British Columbia, the Pacific Northwest (Washington, Oregon Idaho, Montana), and extending into the headwaters of the Columbia River drainage in northern Nevada (Nature serve 2015).

This species generally has the most specific habitat requirements of Pacific Northwest salmonids, with a need for cold and clean water, complex habitats, and migratory connections between headwater streams, rivers, lakes and ocean habitats. This includes cold water temperatures (often less than 54 ^{o}F), complex stream habitat with deep pools, overhanging banks and large woody debris, and connectivity between spawning and rearing areas and downstream foraging, migration, and overwintering habitats (USFWS 2014). Freshwater habitat includes the bottom of deep pools in cold rivers and large tributary streams, often in moderate to fast currents with temperatures of 45-50 ^{o}F. Areas with large woody debris and rubble substrate are important as juvenile rearing habitat (Spahr et al. 1991).

Bull trout exhibit resident and migratory life history strategies. Resident and migratory forms are found together but whether they represent a single population or separate populations is unknown. Either form may produce offspring exhibiting either resident or migratory behavior. Non-migrating resident populations often occur in small headwater streams and complete their life cycle in the streams where they spawn and rear (Rieman and McIntyre 1993).

Migratory bull trout reside for 1 to 4 years in their natal streams before migrating to lakes (adfluvial), larger rivers (fluvial), or in certain coastal areas, to the ocean (anadromous) (USFWS 2010). The fish grow and mature in these areas for several years before returning to tributary streams to spawn (Rieman and McIntyre 1993).

Bull trout using coastal streams and Pacific Ocean waters are part of the Coastal-Puget Sound population and some are anadromous (USFWS 2014). These fish that enter the marine environment are termed amphidromous. Unlike strictly anadromous species, such as Pacific salmon, amphidromous bull trout often return seasonally to fresh water as subadults, sometimes for several years, before returning to spawn (USFWS 2010, citing others). The amphidromous life history form of bull trout is unique to the Coastal–Puget Sound population.

Bull trout spawn in late summer or fall, when falling stream temperatures are between 39-51 ^{o}F. The eggs hatch in late winter or early spring and fry emerge from the stream substrate in April or May. Some juvenile fish move to larger rivers or lakes by mid-summer, while others stay in the spawning tributaries for 2-4 years (Spahr et al. 1991). Bull trout may spawn each year or in alternate years. Spawning usually occurs in gravel riffles of small tributary streams.

Depending on their size and life stage, bull trout eat other fish and fish eggs, small invertebrates, terrestrial and aquatic insects, and zooplankton. (Nature Serve 2015)

Bull trout have declined in their overall range and in numbers of fish. Though still widespread, there have been numerous local extirpations reported throughout the Columbia River basin. Based on a 2008 5-year status review, the USFWS reported in their most recent recovery report to Congress that bull trout were "stable" overall range-wide (species status neither improved nor declined during the reporting year), with some core area populations decreasing, some stable, and some increasing (USFWS 2014).

Threats to the survival of bull trout include destruction, modification or curtailment of habitat; overutilization for various purposes (e.g., commercial, scientific, educational); disease or predation, and other factors (USFWS 2014).

No specific conservation management is proposed for bull trout because neither the species nor suitable habitat occur on the installation. The nearest habitats are the marine waters west of the installation and a stream (Joe's Creek) about ½ mile south of the installation. Managing stormwater (See Section 2.1.6) by addressing surface runoff and deficiencies in the storm drain system will provide a conservation benefit by reducing a source of erosion and potentially polluted runoff to the nearshore environment.

Should Navy activities be proposed at Pacific Beach that could affect bull trout or critical habitat outside the installation boundary, they would be evaluated for potential effects and appropriate consultations conducted with USFWS under Section 7 of the ESA, and through the INRMP review process conservation measures would be developed in cooperation with USFWS.

Effects to bull trout specifically from Navy training and testing activities, were analyzed in documents prepared for the Northwest Training Range Complex (U.S. Navy 2014 and 2015). Support activities at Pacific Beach (i.e., operation of the fixed emitter for training purposes) would not affect bull trout.

The out-of-service communication cables intersect marine waters used by bull trout. Should the cables be proposed for removal or for use, effects to bull trout and designated critical habitat would be analyzed and the appropriate consultation conducted with USFWS under Section 7 of the ESA.

4.2 Wetlands Management

Not applicable: there are no wetland indicators within the fenced portion of Pacific Beach. No special management or programs are needed.

The small portions (~ 10 acres total) of the installation property that are outside the fence are not maintained (aside from periodic brush cutting along the fence) are heavily vegetated, and could contain conditions that would support wetlands. This area is not currently used for either mission or recreation activities. Should projects be proposed in these areas, a wetland delineation would be conducted prior to ground disturbance and appropriate protection measures applied.

4.3 Law Enforcement of Natural Resource Laws and Regulations

No special management or law enforcement programs specific to natural resource laws and regulations are needed; hunting and fishing do not occur, so there is not an active conservation law enforcement program.

4.4 Fish and Wildlife Management

There is no natural habitat for fish or wildlife on the installation so an active management program is not anticipated. Since there is not a NRM on site, direct management of wildlife, birds, reptiles, or amphibians does not occur, but such management isn't needed as the installation provides little if any functioning habitat, aside from trees that can be used for nesting, roosting and cover by birds.

The small portions (~ 10 acres total) of the installation property that are outside the fence are not maintained (aside from periodic brush cutting along the fence) are heavily vegetated, and could contain habitat for bird species, mountain beavers, raccoons, and other wildlife. This area is not used by either mission or recreation operations. Should projects be proposed in these areas, a survey for wildlife would be conducted and appropriate management initiated.

4.4.1 State Comprehensive Wildlife Plans/State Wildlife Action Plans

Washington Department of Fish and Wildlife published a Comprehensive Wildlife Conservation Strategy (CWCS) in 2005. An update of this plan is nearly complete; now called a State Wildlife Action Plan (SWAP). Actions at Pacific Beach will take into account and, where possible, support the conservation and management goals and strategies documented in the SWAP and its coordinated, subordinate plans. The Washington SWAP can be found at: http://wdfw.wa.gov/conservation/cwcs/. In developing this INRMP in coordination with WDFW, no specific projects or actions were identified for implementation at Pacific Beach to support the SWAP. The NRM

will continue to coordinate with WDFW on potential wildlife management that could be conducted at Pacific Beach in support of the SWAP.

4.4.2 Pollinators

Pollinators are insects, birds, bats and even small mammals that transfer pollen grains from flower to flower. Pollinators are responsible for pollinating 80 percent of the world's food crops, as well as the majority of plants and fruits consumed by wildlife. Locally, pollinators are important to berry crops in Grays Harbor county and neighboring Pacific county. Many pollinator populations are declining, to the point that the President issued a Memorandum in 2014 "Creating a Federal Strategy to Promote the Health of Honey Bees and other Pollinators." The DoD has identified ways to advance the President's Memorandum, building on existing land stewardship activities, through a Memorandum to Military Services (September 2014). This includes use of native landscaping, avoiding use of herbicides, and coordinating with other agencies and organizations on habitat and pollinator issues (Pollinator Health Task Force 2015). More information on DoD's work to support pollinators is at http://www.DoDpollinators.org.

At Pacific Beach, promoting pollinator protection and management will include reducing herbicide use by following the IPMP, controlling invasive species through groundskeeping efforts, and promoting the use of native vegetation in landscaping; transitioning to pollinator landscapes when opportunities occur.

Some plants for pollinators are identified in Section 4.6 below. A more extensive list is in the Regional Guide for Farmers, Land Managers, and Gardeners in Washington and Oregon:

http://pollinator.org/PDFs/Guides/CascadeMixedrx8FINAL.pdf

4.5 Forestry Management

Not applicable; there are no forested lands on the Pacific Beach property so forestry management would not occur.

4.6 Vegetation Management

When opportunities arise, the NRM will promote the use of native plants as replacement or rejuvenation of existing landscaping plants. Environmentally and economically beneficial landscaping reduces adverse impacts to the natural environment. Also, certain ornamental shrubs are not suited to the coastal environment where they are subjected to salt spray and do not survive. The NRM will work with MWR to identify plants appropriate for the installation's maritime climate for future landscaping.

GreatPlantPicks.org has assembled a list of native garden plants appropriate for the Pacific Northwest region: http://www.greatplantpicks.org/plantlists/nw_native/yes

The Washington Native Plant Society website contains lists of native ground cover, trees, and shrubs appropriate for the maritime climate: http://www.wnps.org/landscaping/herbarium/index.html

The following plants are acceptable for use at Pacific Beach. Note that this is not an all-inclusive list; There are many other plants appropriate for specific locations and conditions at the installation. These can be found on the above websites.

Evergreen trees:

Shore pine (*Pinus contorta*)
Madrone (*Arbutus menziesii*)
Sitka spruce (*Picea sitchensis*)

Evergreen shrubs:

Everegreen huckleberry (*Vaccinium ovatum*)
Pacific Wax Myrtle (*Myrica californica*)
Kinnikinnick, Bearberry (*Arctostaphylos uva-ursi*)

Deciduous shrubs:

Nootka Rose (*Rose nutkana*)
Lowbush penstemon (*Penstemon fruticosus*)
Oceanspray (*Holodiscus discolor*)

Native plants for wet areas:

Vine Maple (*Acer circinatum*)
Wild Ginger (*Asarum caudatum*)
Douglas Aster (*Aster subspicatus*)

Plants for pollinators (hummingbirds and butterflies):

Red Columbine (*Aquilegia formosa*)
Lowbush penstemon (*Penstemon fruticosus*)
Mock Orange (*Philadelphus lewisii*)
Oceanspray (*Holodiscus discolor*)

Sound Native Plants, Inc. in Olympia, and Coolamon Gardens Nursery in Ocean Shores are two local sources for native plants.

Also, the NRM will coordinate with MWR staff on the periodic fenceline perimeter brush cutting. The general prescription will be to trim vegetation to 48 inches high as far out as necessary to maintain a level plane of trimming towards the Pacific Ocean and to cut vegetation to ground level only in the first 18 inches behind the fence. Plant roots are to be left intact so that the vegetation grows back and the potential for erosion is reduced. This work will be conducted in late summer or early fall, when nesting birds are not present.

4.7 Migratory Birds Management

Migratory birds are protected under the Migratory Bird Treaty Act (MBTA). The MBTA prohibits the taking of most birds, nests, and eggs, except as permitted by the USFWS. In addition, a MOU between USFWS and DoD (2014) identifies specific activities where cooperation between the two agencies will contribute to the conservation of migratory birds and their habitats. The MOU describes actions that should be taken by DoD to advance migratory bird conservation, avoid or minimize the take of migratory birds, and ensure DoD activities (other than military readiness activities) are consistent with the MBTA. The MOU describes how DoD and USFWS will work together cooperatively to achieve conservation of migratory birds. The 2008 Birds of Conservation Concern list (USFWS 2008) identifies 32 species in the Northern Pacific Forest Region, which includes Pacific Beach. Migratory birds and specifically those on the BCC list may fly over or be occasional visitors to the installation.

While in flight, migratory birds could potentially be exposed to effects from certain types of mission activities (e.g., testing and operating radar emitting equipment). Although migratory birds may fly over, or briefly stop at the installation, there is little suitable cover or roosting habitat on the property. The vegetation outside the fence may provide seasonal cover and nesting habitat for songbirds.

The NRM will ensure compliance with the MBTA and meet the intent of the 2014 MOU. Individual projects will be evaluated for potential effects to migratory birds and appropriate consultations conducted with USFWS. One mechanism to accomplish this will be to identify proposed projects that could potentially affect migratory birds and discuss them at the annual INRMP evaluation and conservation metrics meeting (described in Section 1.9).

Services to perform the periodic vegetation trimming along the installation perimeter fence (described in Section 2.1.5) are generally acquired by MWR via local landscaping businesses. Prior to conducting this activity, a scope of work and Environmental Checklist would be routed to the NAVFAC Environmental Division for review and comment, following the process described above in Section 1.10 - Management Strategy. The NRM will identify acceptable time periods to conduct the work that will avoid take of migratory birds. Should other vegetation treatment be proposed, e.g., tree trimming, the same process would be followed.

Proposed building modifications and construction, maintenance, energy projects, etc. will be reviewed following the process described in Section 1.10 - Management Strategy. This will allow the NRM to evaluate these projects for compliance with the MBTA, and require design features to avoid take, or mitigate for potential impacts in accordance the MBTA and other applicable requirements.

For projects requiring an EA or EIA under NEPA, the effects to migratory birds and compliance with the MBTA would be evaluated during the NEPA process.

Resort staff mentioned that during the Grays Harbor Shorebird Festival, visitors to that event stay at Pacific Beach. There is an opportunity to provide education and promote migratory bird awareness, using the Grays Harbor Shorebird Festival as a focal point. Outreach and educational materials will be developed and distributed to personnel, operators and visitors to Pacific Beach.

Marbled Murrelet winter density surveys - Starting in fall of 2012, winter density surveys of marbled murrelets have been conducted on the ocean to the west of Pacific Beach under cooperative agreement with WDFW. Survey results will be used in management of marbled murrelets at Pacific Beach. The full scope of the study estimates on-the-water densities of murrelets during the fall-spring seasons (September-April) adjacent to six Navy installations (Pacific Beach, Naval Air Station Whidbey Island-Crescent Harbor, Manchester Fuel Depot, Naval Base Kitsap [5 locations], Naval Magazine Indian Island and Naval Station Everett). Transects are surveyed within designated nearshore and offshore Primary Sampling Units in fall and again in spring. Densities have been <1 bird/km2. Surveyors saw around 100 birds in the Pacific Beach sampling units in 2014 during each of the survey events (Pearson and Lance 2015).

4.7.1 Bald and Golden Eagle Protection Act

Bald Eagles - Bald eagles have been observed in the forested areas adjacent to the installation and on the beach below. Bald eagles are protected under the Bald and Golden Eagle Protection Act, and the Migratory Bird Treaty Act. Bald eagles are also protected as a Washington state sensitive species (WAC 232-12-011). The Bald and Golden Eagle Protection Act prohibits the taking or possession of, and commerce in, bald and golden eagles, parts, feathers, nests, or eggs with limited exceptions. The definition of take includes pursue, shoot, shoot at, poison, wound, kill, capture, trap, collect, molest or disturb. Bald eagles may not be taken for any purpose unless a permit is issued prior to the taking.

Recovery of bald eagles has been especially successful in Washington State; the number of occupied nests increased from 104 in 1980 to 840 in 2005. Washington State also supports the largest wintering population of bald eagles in the continental U.S. (Stinson et al 2007). Nesting, foraging, and perching habitat for bald eagles is typically associated with water features such as

rivers, lakes, and coastal shorelines where eagles prey on fish, waterfowl, and seabirds. During the breeding season from January 1 to August 15, eagles establish and maintain territories. Nests are built in large dominant trees, primarily Douglas fir, within 3,000 ft. of open water. They are usually seen foraging in open areas having wide views. Perch sites may be used for hunting, consumption of prey, and resting. Foraging and roosting habitat in winter is typically the same as that used during the nesting season. During the winter, bald eagles often congregate in the evening in communal roosts that are chosen for a favorable microclimate that protects eagles from harsh weather (Stinson et al. 2007).

Bald eagles occur year-round on the Washington coast, and are considered common from November through July, and fairly common from August through October (Birdweb.org) They are common breeders along salt and fresh water at lower elevations throughout western Washington, including the north coast of the Olympic Peninsula.

Should bald eagles establish nests near Pacific Beach, the NRM will work with USFWS and WDFW to determine if special protective measures are needed. Information about the Bald and Golden Eagle Protection Act will be provided to Pacific Beach visitors.

Peregrine Falcon - The peregrine falcon was listed as an endangered species by the U.S. Fish and Wildlife Service in 1970 and by the Washington State Fish and Wildlife Commission in 1980. The banning of DDT along with peregrine reintroduction programs and the protection of nest sites allowed the population to increase over the last 20 years. Presently peregrines are a Federal Species of Concern and a State Sensitive species.

Prior to 1980, 12 traditional breeding sites were known in Washington, although historical accounts may have greatly underestimated population size. Washington Department of Fish & Wildlife began monitoring the population in the late 1970s and found only 5 pairs in the state by 1980. The population has increased substantially since that time and in 2001 there were 72 pairs and 89 known territories. Peregrines are now well distributed in Washington however the population remains vulnerable due to its small numbers (Hays and Buchanan 2002).

In the spring, sightings of migrant peregrines are common at Grays Harbor (approximately 22 miles south of Pacific Beach), Willapa Bay (approximately 50 miles south of Pacific Beach), coastal beaches and a number of the larger Puget Sound estuaries (Anderson et al. 1988). These locations are important staging areas for shorebirds. Peregrines prey on migrant shorebirds at many of these sites, and likely focus on this resource while making their way to northern breeding areas.

Autumn migration of peregrines occurs principally along the outer coast and the Puget Sound basin. Peregrine falcons have been observed along the outer coast in September and October.

Western Washington is noted for its high density of wintering peregrines (Anderson and DeBruyn 1979, Anderson et al. 1980, Anderson et al. 1984). The mild maritime climate and

extensive habitat that supports high densities of prey, including shorebirds and waterfowl, attract large numbers of raptors to the region. Peregrine wintering areas near Pacific Beach include Grays Harbor, Willapa Bay, and outer coastal beaches (Dobler and Spencer 1989, Buchanan 1996, Varland 2001).

Nesting sites include the outer northern coast of western Washington. Peregrines nest on islands, "seastacks", or shoreline cliffs. They often select cliff sites that are adjacent to broad valleys, lakes, streams or other geographical settings that allow for a commanding view of the surrounding terrain (Ratcliffe 1993). Coastal and estuarine habitats include beaches, tidal flats, islands, and marshes.

Should peregrine falcons establish nests near Pacific Beach, the NRM will work with USFWS and WDFW to determine if special protective measures are needed. Information about peregrine falcons, as well as other migratory birds will be provided to Pacific Beach visitors.

4.8 Invasive Species Management

Invasive plants are controlled by routine maintenance of the lawns and shrubs within the installation fenceline. Vegetation just outside the fence is not allowed to invade the existing landscaping, which limits the potential for invasive plants to become established on the installation. Presently there is no problem with noxious weeds or invasive plants at the installation due to existing aggressive groundskeeping efforts.

Required grounds maintenance actions will be coordinated to eradicate Class A Noxious Weeds, where present. The Washington State Noxious Weed Control Board describes Class A noxious weeds as noxious weeds not native to the state that are of limited distribution or are unrecorded in the state and that pose a serious threat to the state. These weeds are a threat to all counties of the state and eradication is required.

There are no invasive wildlife concerns requiring special management programs.

4.9 Pest Management

Pacific Beach pest management activities are coordinated through the NAVSTA Everett Integrated Pest Management (IPM) Coordinator and must be consistent with the IPMP.

The IPM program is to be managed to prevent adverse environmental impacts and integrated pest management requires a preventative strategy. As stated in the IPMP, one objective of an integrated pest management program is the reduction of the use and dependence on pesticides.

Consistent with OPNAVINST 6250.4C, the pest management approach must use targeted sustainable methods including habitat modification, biological, genetic, cultural, mechanical, physical and regulatory controls and, when necessary, the judicious use of least hazardous pesticides. Methods must be those least hazardous to non-target organism and the general environment. The IPMP recognizes that the first criteria in selecting a pesticide is determining the need for a pesticide v. a different control method.

Generally herbicides are not used by MWR staff or groundskeeping staff at Pacific Beach. The Navy requires State-certified applicators for applying these products. No chronic pest problems are known but periodically pests such as rats, mice and insects occur and are referred to the Navy's Base Operating Services Contract (BOSC) for resolution. The BOSC must follow the Integrated Pest Management Plan.

The on-site Pacific Beach Resort manager is required to ensure that pest management is performed effectively by pest management service providers, and to ensure pest management records are reported.

Overall pest management strategy, pest control methods, pesticides permitted for use, pesticide safety and pest survey techniques are identified in the Naval Station Everett IPMP (which includes Pacific Beach). The IPMP is reviewed annually and updated as needed.

The Integrated Pest Management Plan is reviewed and signed by the Installation Environmental Program Director and the NRM, providing a mechanism for maintaining awareness of the program and for providing updates to address environmental concerns. During annual reviews, the IEPD and NRM will verify the IPMP includes consideration of migratory bird impacts related to pesticide use.

4.10 Land Management (erosion)

Erosion of the bluff face below the installation is an ongoing process, and of frequent concern due to the loss of installation land and safety issues. The NAVFAC PWD has taken measures (described in Section 2.1.5) to contain and route surface runoff in an effort to slow the rate of erosion. Any future projects to further address the erosion will include a review of the proposed work by the NRM.

4.11 Agricultural Outleasing

Not applicable: there are no agricultural outleases at Pacific Beach.

4.12 GIS Management, Data Integration, Access and Reporting

NAVFAC Northwest manages the local GeoReadiness Center (GRC), which is responsible to CNIC for managing all Geographic Information Systems (GIS) data for installations within the Navy Region Northwest (NRNW) AOR. In addition to the NAVFAC Environmental group, user groups include facilities, utilities, public works, public safety, and others.

The NRNW GRC supports the development of natural resources data reflecting the land and sea habitats of rare and endangered species, migratory birds and marine mammals. These data are critical for the maintenance and management of the environmental business line infrastructure and helps with the installations' efforts to comply with environmental laws and ensures the protection of sensitive resources while supporting military operations. GIS provides the framework for the acquisition, analysis, synthesis, and application of inventory and monitoring data for the Environmental Business Line.

The NAVFAC NW Natural Resources Branch is responsible for preserving biodiversity and ensuring the integrity of natural ecosystems over time while meeting the needs of the military mission and complying with applicable regulations. This requires identifying, analyzing and mapping existing and historic conditions, and species presence and distribution. This information is vital in establishing a foundation for the preparation of INRMPs.

Data coverage of Natural Resource media in general is limited, and it is necessary to "data mine" for datasets and coverage from public sources in order to improve the utility of GIS as a natural resource management tool for informed decision making. Data development, mining and integration are on-going efforts. However the NAVFAC NW Natural Resources Branch has developed a Scope of Work to obtain GIS data development services from the NRNW GRC. The intent is to develop NAVFAC-approved ESRI features, geodatabases and maps that support NAVFAC NW Natural Resource Business Line. This geospatial information will conform to Spatial Data Standards for Facilities, Infrastructure and Environment (SDSFIE, version 3.x) and final deliverables are to be stored and accessible in the GeoReadiness Explorer (GRX), which is the primary web-based viewing tool that provides views of geospatial map date at Navy Installations. Data collected to meet this intent can include field surveys, extraction from reports/imagery, or extraction from existing geospatial data.

As this INRMP is reviewed and improved to accommodate new information and objectives, data requirements and surveys will be identified. Planning level surveys proposed under this INRMP will be scoped to require the submittal of data in an appropriate format and sufficient standard to enable spatial inquiries and use of the data within a greater GIS suite as developed by the GRC. The GRC will be consulted when developing survey scopes to ensure sufficient data fidelity for integration into GRX. Updates to this INRMP will include data and visual representations of data that have been compiled and stored by the GRC.

Survey results, reports, and other non-GIS documents and products originating with NSE that support this INRMP are maintained at Naval Station Everett, within the Environmental Management Division office. Electronic copies are within the shared folder system: W:\Region_Env\Everett\Natural Resources. Where such items are part of a larger, Regional effort, documents are maintained by the NAVFAC Northwest Senior Natural Resource Specialist at Bangor.

4.13 Management & Protection Plans for Outdoor Recreation

Though the main activity at Pacific Beach is outdoor recreation, there is not a formal Outdoor Recreation Plan originating with MWR. Outdoor recreation at Pacific Beach consists of RV and tent camping, and use of the grounds for whale watching, Frisbee throwing, kite flying and similar activities. These activities do not pose a risk, given the lack of natural resource features at the installation and no special management or protection measures are warranted.

4.14 Bird/AnimalAircraft Strike Hazard

Not applicable; no air flights originate at the installation; Pacific Beach does not have an airstrip.

4.15 Wildland Fire Management

No special wildland fire management is needed. The installation is on the coast, with cooler temperatures and more precipitation than inland areas. Also, the installation is not in a wildland area; there are no forest stands, built up fuels, or other dry vegetation on the installation that would fuel a wildland fire.

A Memorandum of Understanding exists between Commander, Navy Region Northwest and Grays Harbor Fire District No. 8 for fire protection and emergency medical services at Pacific Beach. The current MOU, signed in 2010 was established for a 6-year period and contains clauses for renewal (Appendix C).

4.16 Training of Natural Resources Personnel

The Sikes Act requires that, to the extent practicable, military departments ensure professionally trained natural resources management personnel are available and assigned responsibility to implement the Sikes Act, including the preparation and implementation of INRMPs.

DoD Instruction 4715.03; *Natural Resources Conservation Program* requires that sufficient numbers of professionally trained natural resources management personnel are available and assigned responsibility to manage their installations' natural resources. It recognizes that

necessary supplemental training to ensure the proper and efficient management of those resources needs to be provided in a timely manner (e.g., Naval Civil Engineer Corps Officers School's Natural Resources Compliance Course, DoD Sikes Act Training Course).

Training requirements for the NRM position responsible for implementing Sikes Act and DoD requirements are in Chapters 3 and 12 of OPNAV M-5090.1

Another local training opportunity is the Padilla Bay National Estuarine Research Reserve in Bayview, WA. The reserve hosts several training sessions annually in coordination with the Washington State Department of Ecology under the title of "Coastal Training Program Washington." Info available at http://www.coastaltraining-wa.org

4.17 Coastal/Marine Management

The coastal and marine environment adjacent to Pacific Beach is outside the installation boundary. There are no coastal shorelines or marine waters on the installation therefore no special management of these types of environments occurs.

Management of the Olympic Coast National Marine Sanctuary (Section 2.1.2) is guided by the National Marine Sanctuaries Act and a site-specific mission statement. Day-to-day management is delegated to Sanctuary staff located in Port Angeles, Washington. The Sanctuary is adjacent to Pacific Beach but does not overlap with installation property.

Management of the Seashore Conservation Area (Section 2.1.2), which encompasses the ocean beaches, is under the jurisdiction of the Washington state parks and recreation commission. The ocean beaches do not overlap with the installation property.

Although management of coastal shorelines and marine waters is outside the Navy's purview at Pacific Beach, stormwater runoff from the installation can exacerbate natural erosion processes that influence the shoreline below and is managed to reduce and prevent erosion. Surface water management at Pacific Beach is an ongoing process. As described in Section 2.1.5, actions include repairing storm drain pipes; installing new sections of storm drain pipe; cleaning the entire storm drain system; installing catch basins; cleaning and flushing catch basins; creating swales along the top of the bluff to capture runoff; and planting native vegetation where ground disturbance occurred.

Additional planned work includes site grading and drainage elevation adjustments to achieve long-term drainage solutions for problem areas, addressing surface water ponding by draining water towards catch basins, establishing additional French drains, and investigating and addressing subsurface flow that exits on the bluff face.

The Coastal Zone Management Act (CZMA) calls for effective management, beneficial use, protection, and development of the nation's coastal zone. The CZMA requires coastal states, including Washington, to develop management programs that demonstrate how states carry out their obligations and responsibilities in managing their coastal areas. In Washington, the Department of Ecology (DOE) is responsible for implementing Washington's Coastal Zone Management Program. Pacific Beach is located in a coastal county (Grays Harbor County) and thus is subject to the Coastal Zone Management Act as implemented by DOE. Federal activities and development at Pacific Beach will be reviewed to verify compliance to the maximum extent practicable with Washington's Coastal Zone Management Program.

4.18 Floodplains Management

Not applicable: The Pacific Beach property sits on a coastal bluff; it is not within a floodplain.

4.19 Other Leases

A real estate agreement is in place between the Navy and the North Beach Business Association which permits a gazebo and a brick-paved area of about 400 ft^2 on the south end of the Pacific Beach property.

An easement exists for the out-of-service cables that originate on the installation and cross private land before entering the ocean. The easement was obtained from the private landowner of the old railroad cut for that portion of the railroad cut that lies at the foot of the bluff below the installation. The easement allows the Navy to enter the property to inspect and maintain the cables.

4.20 Climate Change Initiatives

Predicted effects of climate change indicate they are relatively gradual. Timeframes of 30 to 100 years are used to characterize predicted changes. For example an average annual temperature increase of 3.2°F by the 2040s, a 37-44% decline in spring snowpack by the 2040s, and a mid-range estimate of 11 inches in sea level rise by 2100 for the Central and Southern Coast are predicted in Littell et al. (2009, citing others). It can be expected that climate change effects that impact the physical environment at Pacific Beach will occur incrementally over long timeframes. During implementation, update, and reviews of this INRMP, consideration of local changes attributable to climate change will be made so that natural resources management can be adjusted as appropriate.

The recommended management actions in this INRMP are based on current and near-term foreseeable conditions. Adaptive management of natural resources at Pacific Beach will occur as

climate change-related issues develop. Most notably is the potential for increased erosion of the bluff face below the installation.

At a broader scale, the Federal government is implementing climate change management strategies through a number of policies. To implement its climate policy, the Federal government is using voluntary and incentive-based programs to reduce emissions and has also established programs to promote climate technology and science:

EO 13514**:** Oct 2009**.** Energy (Greenhouse gas reduction), Water, Waste conservation and reduction goals

- Requires agency Strategic Sustainability Performance Plans
- "…evaluate agency climate-change risks and vulnerabilities to manage the effects of climate change on the agency's operations and mission in both the short and long term…"

Whitehouse Council on Environmental Quality (CEQ): Mar 2011. "Federal Agency Climate Change Adaptation Planning, Implementing Instructions" require federal agencies to:

- Assess likely effect of climate change on agency's ability to achieve its mission & strategic goals, Sept 30, 2011
- Identify priority adaptation actions to be implemented, Sept 30, 2011
- Submit publically-available agency climate change adaptation plans

The Quadrennial Defense Review: Feb 2010. "DoD will need to adjust to the impacts of climate change on our facilities and military capabilities... The Department must complete a comprehensive assessment of all installations to assess the potential impacts of climate change on its missions and adapt as required."

Department of Defense Strategic Sustainability Performance Plan: August 2010. Identifies planning actions in accordance with EO13514.

Department of Defense Instruction 4715.03: Feb 2011. Requires integration of climate change impact assessment and adaptation planning in INRMPs.

To the extent they apply at Pacific Beach, these and other ongoing Federal and DON energy initiatives will be incorporated into management of the installation. The Navy will monitor, coordinate with, and integrate actions and recommendations from appropriate Federal and Department of Defense guidance as they pertain to natural resource management at Pacific Beach.

5. Implementation

Projects to implement this INRMP are in Appendix D.

This INRMP reflects a strategy that addresses legal, regulatory, DoD, DON, and CNO directives and policy requirements regarding funding and manpower. "Implementation" anticipates the execution of all Environmental Readiness Level (ERL) 4 projects and activities within the timeframes identified in the INRMP. However, all actions contemplated in this INRMP are subject to the availability of funds properly authorized and appropriated under Federal law. Nothing in this INRMP is intended to be nor must be construed to be a violation of the Anti-Deficiency Act (31 U.S.C. 1341 et seq.)

5.1 Summary of process

The process to implement this INRMP consists of funding and executing specific projects or conducting work with in-house staff, which also requires specific funding. Implementation further includes NRM input to military and MWR activities and proposed projects in order to ensure they are consistent with natural resource requirements and with this INRMP.

The INRMP is considered implemented once the installation:

- Requests, receives, and uses funds for all Level 4 projects and activities (definition described below in Section 5.5 Funding);
- Ensures that sufficient numbers of professionally trained natural resources management staff are available to perform the tasks required by the INRMP.
- Coordinates annually with all cooperating agencies; and
- Documents specific INRMP accomplishments each year.

5.2 Achieving No Net Loss

No net loss to the military mission at Pacific Beach or to the capability of lands to support the mission is anticipated. Mission activities are of a very limited scope, and there are no natural resource conditions on-site that would constrain mission activities.

The NRM will stay cognizant of activities and environmental conditions at the installation, in order to identify potential future constraints on the military mission related to natural resources.

5.3 Use of Cooperative Agreements

Under the Sikes Act, the Navy can enter into Cooperative Agreements to accomplish natural resource management projects. Further, per a 20 June, 2014 memo from DoD to the Assistant Secretary of the Navy (Energy, Installations and Environment), priority is to be given to federal and state agencies responsible for conservation or management of fish and wildlife when contracting for projects identified in INRMPs.

Cooperative agreements have been used successfully to conduct INRMP projects in other locations within NSE's Area of Responsibility, for example conducting marbled murrelet and American pika surveys at Naval Radio Station (T) Jim Creek. Cooperative agreements will be considered as a mechanism to conduct specific surveys or natural resource projects, should they be identified at Pacific Beach to further the implementation of this INRMP.

5.4 Other Agreements

On a larger scale, DoD has entered into partnerships and collaborative agreements to assist with natural resources management and Pacific Beach, as part of DoD, benefits from these agreements:

- January 2006 MOU between DoD, USFWS and the International Association of Fish and Wildlife Agencies for a Cooperative Integrated Natural Resources Management Program on Military Installations.
- July 2014 MOU between the USFWS and DoD to Promote the Conservation of Migratory Birds. This MOU promotes the conservation of migratory bird populations while sustaining the use of military lands and airspace for testing, training, and operations.
- November 2006 MOU between DoD and US Department of Agriculture Natural Resources Conservation Service. Both agencies signed an MOU agreeing to coordinate activities to preserve land and improve water quality on lands surrounding government-owned military bases.
- 1996 MOU between the US Environmental Protection Agency and DoD for coordinating of Integrated Pest Management activities.
- 1996 cooperative agreement between DoD and The Nature Conservancy for conducting natural resources inventories at installations.

5.5 Priority Setting and Funding Classification

Project priority within this INRMP is initially determined by funding classification as defined in Department of Defense Instruction 4715.03, *Natural Resources Conservation Program* (DoD 2011). This instruction identifies recurring and non-recurring requirements:

Recurring Requirements:

a. Administrative, personnel, and other costs associated with managing the DoD Natural Resources Conservation Program that are necessary to meet applicable compliance requirements in Federal and state laws, regulations, Executive Orders (Eos), and DoD policies, or in direct support of the military mission.

b. DoD components shall give priority to recurring natural resources conservation management requirements associated with the operation of facilities, installations, and deployed weapons systems. These activities include day-to-day costs of sustaining an effective natural resources management program, as well as annual requirements, including manpower, training, supplies, permits, fees, testing and monitoring, sampling and analysis, reporting and recordkeeping, maintenance of natural resources conservation equipment, and compliance self-assessments.

Non-Recurring Requirements:

Current Compliance - Includes installation projects and activities to support:

a. Installations currently out of compliance (e.g., received an enforcement action from an authorized Federal or state agency or local authority).
b. Signed compliance agreement or consent order.
c. Meeting requirements with applicable Federal or state laws, regulations, standards, EOs, or DoD policies.
d. Immediate and essential maintenance of operational integrity or military mission sustainment.
e. Projects or activities that will be out of compliance if not implemented in the current program year. Those activities include:
i. Environmental analyses for natural resources conservation projects, and monitoring and studies required to assess and mitigate potential impacts of the military mission on conservation resources.
ii. Planning documentation, master plans, compatible development planning, and INRMPs.
iii. Natural resources planning-level surveys.
iv. Reasonable and prudent measures included in incidental take statements of biological opinions, biological assessments, surveys, monitoring, reporting of assessment results, or habitat protection for listed, at-risk, and candidate species so that proposed or continuing actions can be modified in consultation with the USFWS or NMFS.
v. Mitigation to meet existing regulatory permit conditions or written agreements.

vi. Nonpoint source pollution or watershed management studies or actions needed to meet compliance dates cited in approved state coastal nonpoint source pollution control plans, as required to meet consistency determinations consistent with Coastal Zone Management.
vii. Wetlands delineation critical for the prevention of adverse impacts to wetlands, so that continuing actions can be modified to ensure mission continuity.
viii. Compliance with missed deadlines established in DoD-executed agreements.

Maintenance Requirements - Includes those projects and activities needed to meet an established deadline beyond the current program year and maintain compliance. Examples include:

a. Compliance with future deadlines.
b. Conservation, GIS mapping, and data management to comply with Federal, state, and local regulations, EOs, and DoD policy.
c. Efforts undertaken in accordance with non-deadline specific compliance requirements of leadership initiatives.
d. Wetlands enhancement to minimize wetlands loss and enhance existing degraded wetlands.
e. Conservation recommendations in biological opinions issued pursuant to the ESA.

Enhancement Actions - Beyond Compliance. Includes those projects and activities that enhance conservation resources or the integrity of the installation mission, or are needed to address overall environmental goals and objectives, but are not specifically required by law, regulation, or EO, and are not of an immediate nature. Examples include:

a. Community outreach activities, such as International Migratory Bird Day, Earth Day, National Public Lands Day, Pollinator Week, and Arbor Day activities.
b. Educational and public awareness projects, such as interpretive displays, oral histories, Watchable Wildlife areas, nature trails, wildlife checklists, and conservation teaching materials.
c. Restoration or enhancement of natural resources when no specific compliance requirement dictates a course or timing of action.
d. Management and execution of volunteer and partnership programs.

Environmental Readiness Levels (ERL) (OPNAV M-5090.1 CH 2):

ERL 4:

- Supports all actions specifically required by law, regulation or Executive Order (DoD Class 1 and 2 requirements) just in time.
- Supports all DoD Class 0 requirements as they relate to a specific statute such as hazardous waste disposal, permits, fees, monitoring, sampling and analysis, reporting and record keeping.
- Supports recurring administrative, personnel and other costs associated with managing environmental programs that are necessary to meet applicable compliance requirements (DoD Class 0).

- Supports DoD policy requirement to comply with overseas Final Governing Standards (FGS) and Overseas Environmental Baseline Guidance Document (OEBGD).
- Supports minimum feasible Navy executive agent responsibilities, participation in Office of the Secretary of Defense (OSD) sponsored inter-department and inter-agency efforts, and OSD mandated regional coordination efforts.

ERL 3:

- Supports all capabilities provided by ERL4.
- Supports existing level of Navy executive agent responsibilities, participation in OSD sponsored inter-department and inter-agency efforts, and OSD mandated regional coordination efforts.
- Supports proactive involvement in the legislative and regulatory process to identity and mitigate requirements that will impose excessive costs or restrictions on operations and training.
- Supports proactive initiatives critical to the protection of Navy operational readiness.

ERL 2:

- Supports all capabilities provided under ERL3.
- Supports enhanced proactive initiatives critical to the protection of Navy operational readiness.
- Supports all Navy and DoD policy requirements.
- Supports investments in pollution reduction, compliance enhancement, energy conservation and cost reduction.

ERL 1:

- Supports all capabilities provided under ERL2.
- Supports proactive actions required to ensure compliance with pending/strong anticipated laws and regulations in a timely manner and/or to prevent adverse impact to Navy mission.
- Supports investments that demonstrate Navy environmental leadership and proactive environmental stewardship.

5.5.1 Description of Funding Process:

Once validated, INRMP projects are entered into EPR-web; the Navy's Environmental Program Requirements website and the correct ERL assigned to each project. Typically, funding for all ERL Level 3 and 4 projects will be programmed in this manner. Projects that are ERL 1 and 2 should seek alternate funding sources, listed below. Executed funding will be entered into EPR-web. There are restrictions on how different Navy funding sources for natural resources management can be used. It is important, therefore, that appropriate funding sources are used and that EPR entries clearly justify funding requests so that: (1) natural resource funds are

distributed wisely and (2) funding levels are not threatened by the use of funds in ways that are inconsistent with funding program rules. The following are primary funding sources for Navy natural resources programs:

(1) *O&MN Environmental Funds.* The majority of natural resource projects are funded with Operations and Maintenance, Navy (O&MN) environmental funds. These appropriated funds are the primary source of resources to support must-fund, just-in-time environmental compliance (i.e., Navy ERL 4 projects). O&MN funds are generally not available for Navy Environmental Readiness Level 3 - 1 projects. In addition to the restriction to Environmental Readiness Level 4 requirements, there are other limitations placed on the use of O&MN funds:

Only the initial procurement, construction, and modification of a facility or project are considered valid environmental funding requirements. The subsequent operation, modification due to mission requirements, maintenance, repair, and eventual replacement is considered a Real Property Maintenance (RPM) funding requirement. For example, the cost of initially installing a best management practice (BMP) can be funded through O&MN, but future maintenance or repair of that BMP must be paid by RPM funds.

When natural resource requirements are tied to a specific construction project or other action, funds for the natural resource requirements should be included in the overall project costs. For example, if a permit for filling wetlands is required as part of a military construction (MILCON) project, the costs of obtaining the permit and implementing required mitigation should be paid by MILCON funds as part of the overall construction project costs.

(2) *The Legacy Resource Management Program (Legacy Program):* is an initiative to fund military conservation projects. The program assists DoD in protecting and enhancing resources while supporting military readiness. A Legacy project may involve regional ecosystem management initiatives, habitat preservation efforts, archaeological investigations, invasive species control, Native American consultations, and/or monitoring and predicting migratory patterns of birds and animals. Three principles guide the Legacy program: stewardship, leadership, and partnership. *Stewardship* initiatives assist DoD in safeguarding its irreplaceable resources for future generations. By embracing a *leadership* role as part of the program, the Department serves as a model for respectful use of natural and cultural resources. Through *partnerships*, the program strives to access the knowledge and talents of individuals outside of DoD. Legacy Program funds are subject to the following caveats:

- The availability of Legacy funds is generally uncertain early in the year.
- Pre-proposals for Legacy projects are due in March and submitted using the Legacy Tracker Website: https://www.dodlegacy.org .
- Project proposals are reviewed by the Navy chain of command before being submitted to the DoD Legacy Resources Management Office for final project selection.
- The Legacy Website provides further guidance on the proposal process and types of projects requested.

(3) *Forestry Revenues.* There are no opportunities for commercial harvest or the sale of other forest products at Pacific Beach, so this is not a potential revenue source

(4) *Agricultural Outleasing.* There are no agricultural outleases at Pacific Beach, so this is not a potential revenue source.

(5) *Fish and Wildlife Fees.* There are no hunting or fishing opportunities at Pacific Beach , so this is not a potential revenue source.

(6) *Recycling Funds.* An installation with a Qualified Recycling Program (QRP) may use proceeds for some types of natural resource projects. Proceeds must first be used to cover QRP costs. Up to 50 percent of net proceeds may then be used for pollution abatement, pollution prevention, composting, alternative fueled vehicle infrastructure support, vehicle conversion, energy conversion, or occupational safety and health projects, with first consideration given to projects included in the installation's pollution-prevention plans. Remaining funds may be transferred to the non-appropriated MWR account for approved programs, or retained to cover anticipated future program costs. Natural resource projects can be funded as pollution prevention/abatement (e.g., wetlands or riparian forest restoration) or MWR projects (e.g., trail construction and maintenance).

(7) *Strategic Environmental Research and Development Program (SERDP) Funds*:
SERDP is DoD's corporate environmental research and development (R&D) program, planned and executing in full partnership with the Department of Energy (DOE) and Environmental Protection Agency (EPA), with participation by numerous other Federal and non-Federal organizations. SERDP funds for environmental and conservation are allocated through a competitive process. Within its broad areas of interest the SERDP focuses on Cleanup, Compliance, Conservation, and Pollution Preventions technologies. The purpose of the conservation technology program is to use research and development to provide improved inventory and monitoring capabilities; develop more effective impact and risk assessment techniques; and provide improved mitigation and rehabilitation capabilities. Recently, the program solicited Statements of Need for conservation technology proposals to research indicators of stress on threatened and endangered species and to develop techniques to inventory and monitor threatened and endangered species in accessible areas.

(8) *Non-DoD Funds.* Many grant programs are available for natural resources management projects, such as watershed management and restoration, habitat restoration, and wetland and riparian area restoration. When Federally funded, these programs typically require non-Federal matching funds. However, installations may partner with other groups to propose eligible projects.

INRMPs should include valid ERL 1 and 2 projects and actions that would enhance an installation's natural resources. Nontraditional sources of funding for natural resources programs include non-appropriated reimbursable funds (i.e., agricultural out-leasing, forestry, hunting and fishing fees), and appropriated reimbursable funds (e.g., DoD Legacy Program, U.S. Department of Agriculture (USDA) Pest Management Program). These

accounts are sources of funds for ERL 3 projects. Installations, however, should not depend on reimbursable programs to fund their natural resources management programs.

REFERENCES

Ainley, D. G., Allen, S. G., & Spear, L. B. 1995. Offshore occurrence patterns of marbled murrelets in central California. In C. J. Ralph, G. L. Hunt, Jr., M. G. Raphael and J. F. Piatt (Eds.), Ecology and Conservation of the Marbled Murrelet. (General Technical Report PSW-GTR-152, pp. 361-369). Albany, CA: Pacific Southwest Research Station, Forest Service, U.S. Department of Agriculture.

Altman, B. 2011. Historical and current distribution and populations of bird species in prairie-oak habitats in the Pacific Northwest. Northwest Science, 85(2), 194-222.

Anderson, C. M., P.M. DeBruyn , T. Ulm, and B. Gaussoin. 1980. Behavior and ecology of peregrine falcons wintering on the Skagit Flats, Washington: a report on the 1980 field season for the state of Washington Department of Game.Unpubl. Rep. Wash. Dept. Game, Olympia, Washington.

Anderson, C. M., R. K. Knapp, and J. K. Fackler. 1984. The behavior and ecology of fall peregrine falcons at Lummi Bay and vicinity, Whatcom county, Washington. Unpubl. Report.

Anderson, C. M., D. G. Roseneau, B. J. Walton, and P. J. Bente. 1988. New evidence of a peregrine migration along the west coast of North America. Pages 507-516 in T. J. Cade, J. H. Enderson, C. G. Thelander, and C. M. White, editors. Peregrine falcon populations: their management and recovery. The Peregrine Fund, Boise, Idaho.

Anderson, C. M. and P.M. DeBruyn. 1979. Behavior and ecology of peregrine falcons wintering on the Skagit Flats, Washington: a report on the 1979 field season. Report to Washington Department of Game, Olympia, Washington.

Buchanan, J. B. 1996. A comparison of merlin and peregrine falcon hunting success in two coastal habitats. Journal of Raptor Research 30:93-98.

Burger, A. E. 1995. Marine distribution, abundance, and habitat of marbled murrelets in British Columbia. In C. J. Ralph, G. L. Hunt, M. G. Raphael, and J. F. Piatt (Eds.), Ecology and conservation of the marbled murrelet (pp. 295-312). General Technical Report. PSW-GTW-152. Pacific Southwest Experimental Station, U.S. Forest Service, Albany, California.

Burger, A. E. 2001. Diving depths of shearwaters. The Auk, 118(3), 755-759. Retrieved from http://www.jstor.org/stable/4089940.

Carter, H.R., & Stein, J. L. 1995. Molts and plumages in the annual cycle of the marbled murrelet. In Ralph, C. J., G. L. Hunt, Jr., M. G. Raphael, and J. F. Piatt (Eds.), Ecology and conservation of the marbled murrelet (pp. 99-109). USDA Forest Service General Technical Report PSW-152.

Comer, P., D. Faber-Langendoen, R. Evans, S. Gawler, C. Josse, G. Kittel, S. Menard, M. Pyne, M. Reid, K. Schulz, K. Snow, and J. Teague. 2003. Ecological Systems of the United States: A Working Classification of U.S. Terrestrial Systems. NatureServe, Arlington, Virginia.

Day, R. H., & Nigro, D. A. 2000. Feeding ecology of Kittlitz's and marbled murrelets in Prince William Sound, Alaska. Waterbirds 23(1), 1-14.

Dobler, F. C. and R. D. Spencer. 1989. Wintering peregrine falcon *Falco peregrinus* habitat utilization in Grays Harbor, Washington. Pages 71-78 in B-U. Meyburg and R. D. Chancellor, editors. Raptors in the modern world: proceedings of the III world conference on birds of prey and owls. WWGBP, Berlin, Germany.

Falxa, G.A., J. Baldwin, D. Lynch, S.K. Nelson, S.L. Miller, S.F. Pearson, M.G. Raphael, C. Strong, T. Bloxton, B. Galleher, B. Hogoboom, M. Lance, and R. Young. 2009. Marbled murrelet effectiveness monitoring, Northwest Forest Plan: 2008 summary report. 19 p.

Hayes, G. E. and J. B. Buchanan. 2002. Washington State status report for the Peregrine Falcon. Washington Dept. Fish and Wildlife, Olympia. 77 pp.

International Union for the Conservation of Nature and Natural Resources. 2010. The IUCN red list of threatened species. Version 2010.1. International Union for the Conservation of Nature and Natural Resources. Retrieved from http://www.iucnredlist.org/ as accessed on 2010, 25 June.

Kuletz, K. J. & D. K. Marks. 1997. Post-fledging behavior of a radio-tagged juvenile marbled murrelet. Journal of Field Ornithology, 68, 421-425.

Littell, J., M.M. Elsner, S.W. Binder, and A. Snover. 2009. The Washington climate change impacts assessment: Evaluating Washington's future in a changing climate. Chapter 11. Seattle, WA. University of Washington.

Morris, Michael R. 2008. Naval Facility (NAVFAC) Station History. Accessed at: http://www.navycthistory.com/NAVFACStationsHistory.txt.

NatureServe. 2014. NatureServe Explorer: An online encyclopedia of life [web application]. Version 7.1. NatureServe, Arlington, Virginia. Available http://explorer.natureserve.org. (Accessed: October 20, 2014).

NatureServe. 2015. NatureServe Explorer: An online encyclopedia of life [web application]. Version 7.1. NatureServe, Arlington, Virginia. Available http://explorer.natureserve.org. (Accessed: February 9 2015).

Naval Facilities Engineering Command (NAVFAC). 1976. Report on Inspection and Evaluation of Slope Erosion. Department of the Navy. Western Division. April, 1976.

Naval Facilities Engineering Command (NAVFAC) 2010. Technical Report TR-2326-ENV, Environmental Analysis of Navy Seafloor Cables. 0817 Pollution Abatement Ashore Program. Engineering Service Center, Port Hueneme, CA. 46 pages plus appendices.

Naval Facilities Engineering Command (NAVFAC) 2014. Integrated Pest Management Plan. Naval Station Everett, Washington State. Prepared by Naval Facilities Engineering Command, Atlantic. Norfolk VA.

Nelson, S. K. 1997. The birds of North America, No. 276 - marbled murrelet (Brachyramphus marmoratus). In A. Poole and F. Gill (Eds.), The birds of North America: Life histories for the 21st century (pp. 1-32). The Academy of Natural Sciences & The American.

Pearson, S.F., Sundstrom, C., Ritchie, W., & Peterson, S. 2012. Washington State snowy plover population monitoring, research, and management: 2011 nesting season research progress report. Washington Department of Fish and Wildlife, Wildlife Science Division, Olympia, WA.

Pearson, S.F., Sundstrom, C., Ritchie, W., & Peterson, S. 2013. Washington State snowy plover population monitoring, research, and management: 2012 nesting season research progress report. Washington Department of Fish and Wildlife, Wildlife Science Division, Olympia, WA.

Pearson, S.F., C. Sundstrom, B. Hoenes, and W. Ritchie. 2014. Washington State Snowy Plover Population Monitoring, Research, and Management: 2013 Nesting Season Research Progress Report. Washington Department of Fish and Wildlife, Wildlife Science Division, Olympia.

Pearson, S.F. and M.M. Lance. 2015. Fall-spring 2014/2015 Marbled Murrelet At-Sea Densities for Four Strata Associated with U.S. Navy Facilities: Annual Research Progress Report. Washington Department of Fish and Wildlife, Wildlife Science Division, Olympia,

WA.Pollinator Health Task Force. 2015. National strategy to promote the health of honey bees and other pollinators. May 19, 2015. 58 pp.

Pringle, Russell F. 1986. Soil Survey of Grays Harbor County area, Pacific County, and Wahkiakum County, Washington. USDA, Soil Conservation Service.

Ratcliffe, D. A. 1993. The peregrine falcon. Second edition. T& A D Poyser, London, England.

Rieman, B. E. and J. D. McIntyre. 1993. Demographic and Habitat Requirements for Conservation of Bull trout. USDA. Forest Service. Intermountain Research Station General Technical Report INT-302. September 1993. 34 p. plus Appendices.

Sackett, Russell, R.A. 2012. Inventory and Evaluation: The Navy's Pacific Beach Facilities, Pacific Beach, Washington. Naval Facilities Engineering Command (NAVFAC) Northwest; Silverdale, Washington. 109 pp.

Spahr, R., L. Armstrong, D. Atwood, and M. Rath. 1991. Threatened, endangered, and sensitive species of the Intermountain Region. U.S. Forest Service, Ogden, Utah.

Stinson, D. W., J. W. Watson, and Kelly R. McAllister. 2007. Washington State Status Report for the Bald Eagle. Washington Department of Fish and Wildlife, Olympia. 86 + viii pp.

Twelker, Neil H. and Associates. 1978. Memo to Mr. Jan Kiaer, Architect, regarding cliff stability at U.S. Naval Oceanographic Base, Pacific Beach, Washington.

U.S. Corps of Engineers. 1987. Corps of Engineers Wetlands Delineation Manual. Technical Report Y-87-1. Environmental Laboratory, Corps of Engineers, Vicksburg, MS. 92 pages plus appendices.

USDA Soil Conservation Service (SCS). 1982. Shoreline Erosion Control Plan. August, 1982.

U.S. Fish and Wildlife Service. 1997. Recovery Plan for the Threatened Marbled Murrelet (*Brachyramphus marmoratus*) in Washington, Oregon, and California. Portland, Oregon. 203 pp.

U.S. Fish and Wildlife Service. (2007). Recovery plan for the Pacific Coast population of the western snowy plover (Charadrius alexandrinus nivosus). Volume I: Recovery plan. Region 1, Portland, OR. September.

U.S. Fish and Wildlife Service. 2008. Birds of Conservation Concern 2008. United States Department of Interior, Fish and Wildlife Service, Division of Migratory Bird

Management, Arlington, Virginia. 85 pp. [Online version available at <http://www.fws.gov/migratorybirds/>]

U.S. Fish and Wildlife Service. 2012. Marbled Murrelet Nesting Season and Analytical Framework for Section 7 Consultation in Washington. June 20, 2012. U.S. Fish and Wildlife Service, Washington Fish and Wildlife Office, Lacey, WA.

U.S. Navy Bureau of Yards and Docks (USNBY&D). 1947. Building the Navy's Bases in World War II: History of the Bureau of Yards and Docks and the Civil Engineer Corps, 1940-1956. Washington, D.C.: United States Government Printing Office.

U.S. Navy 2010a. Final Northwest Training Range Complex Environmental Impact Statement.

US Navy 2010b. NAVSEA NUWC Keyport Range Complex Extension Final Environmental Impact Statement/Overseas Environmental Impact Statement.

U.S. Navy. 2013. Integrated Cultural Resources Management Plan. Naval Station Everett and Special Areas. Volumes 1 and 2.

U.S. Navy 2014. Pacific Northwest Electronic Warfare Range. Final Environmental Assessment. September 2014.

U.S. Navy 2016. Northwest Training and Testing. Final Environmental Impact Statement/ Overseas Environmental Impact Statement.

Varland, D.E. 2001. Raptor surveys and banding on coastal beaches of western Washington: 2000 annual report. Unpublished report to Washington State Parks and Recreation Commission, Olympia, Washington.

Wahl, T. R., Tweit, B., and Mlodinow, D.G., eds. 2005. Birds of Washington: Status and Distribution. Oregon State University Press, Corvallis.

Walsh, Timothy J., et.al. 2000. Tsunami Hazard Map of the southern Washington Coast: Modeled Tsunami Inundation from a Cascadia Subduction Zone Earthquake. Washington Department of Natural Resources, Division of Geology and Earth Resources Geologic Map GM-49 October 2000.

WDFW. 2013. Threatened and Endangered Wildlife in Washington; 2012 Annual Report: Listing and Recovery Section, Wildlife Program, WDFW, Olympia, WA 251 pp.

This page intentionally left blank

APPENDICES:

Appendix A – Natural Resource Manager Designation Letter

Appendix B – Environmental Assessment for implementation of Pacific Beach INRMP

Appendix C – Memorandum of Understanding for Fires Suppression and Emergency Medical Services

Appendix D – Project List

Appendix E – List of Acronyms

Appendix F – Terms and Definitions

Annexes:

Annual INRMP Evaluations and Updates

This page intentionally left blank

APPENDIX A

NATURAL RESOURCE MANAGER DESIGNATION LETTER

DEPARTMENT OF THE NAVY
NAVAL STATION EVERETT
2000 WEST MARINE VIEW DRIVE
EVERETT, WA 98207-5001

IN REPLY REFER TO:

5090
N4
5 Nov 14

From: Commanding Officer, Naval Station Everett
To: Ms. Linda J. Wagoner

Subj: APPOINTMENT AS INSTALLATION NATURAL RESOURCES MANAGER

Ref: (a) OPNAVINST 5090.1C
(b) OPNAV M-5090.1

1. Per reference (a), you are hereby designated as the Installation Natural Resources Manager for all facilities and special areas covered by the Naval Station Everett Area of Responsibility (AOR). You will familiarize yourself with the policies and procedures of references (a) and (b) in the performance of your duties.

2. This designation remains in effect until rescinded in writing or upon your transfer from this command, whichever occurs first.

M. J. COURY

Copy to:
NAVSTA Everett (N4)

APPENDIX B

ENVIRONMENTAL ASSESSMENT AND FONSI FOR THE INRMP

Document will be inserted when NEPA analysis is complete.

APPENDIX C

MEMORANDUM OF UNDERSTANDING FOR FIRE SUPPRESSION AND EMERGENCY MEDICAL SERVICES

DEPARTMENT OF THE NAVY
COMMANDER, NAVY REGION NORTHWEST
1100 HUNLEY RD., SILVERDALE, WA 98315

GRAYS HARBOR FIRE DISTRICT NO. 8
SR 109, PO BOX 357, PACIFIC BEACH, WA 98571

COMNAVREG NW
4000
Ser /4459
17 Dec 10

MEMORANDUM OF UNDERSTANDING
BETWEEN
COMMANDER, NAVY REGION NORTHWEST
AND
GRAYS HARBOR FIRE DISTRICT NO.8

Subj: FIRE PROTECTION AND EMERGENCY MEDICAL SERVICES

Ref: (a) DOD Instruction 4000.19
(b) CNICINST 4000.1
(c) 44 Code of Federal Regulations, Section 151

1. Purpose. This Memorandum of Understanding (MOU) between Commander, Navy Region Northwest and Grays Harbor Fire District No.8, hereinafter referred to as Grays Harbor, is prepared in accordance with *References (a) and (b)* establishing an agreement for the provision of fire control/suppression and emergency medical services at the Navy's Pacific Beach Resort and Conference Center located in Pacific Beach, WA, hereinafter referred to as Pac Beach.

2. Background. Pac Beach does not have personnel or equipment onboard to provide suppression of fires or emergency medical services. Grays Harbor has the responsibility to provide fire protection/suppression and emergency medical services in the geographic area where Pac Beach is located.

3. Scope. It is the intent of both parties that Grays Harbor be allowed access to the federal property of Pac Beach to perform the same level of fire protection/suppression and emergency medical services provided to the district residents.

4. Period of Performance. This MOU shall be in effect for six (6) years from date of last signature unless modified or terminated in accordance with paragraph 8. This MOU supersedes

all previous agreements concerning fire protection and emergency medical services between the U.S. Navy and Grays Harbor.

5. Responsibilities.

a. Pac Beach will:

(1) Contact Grays Harbor County 911 to effect the response of Grays Harbor for fire protection/suppression and emergency medical services.

2) Be responsible for cleanup and disposal of debris resulting from any fire at Pac Beach.

3) Perform annual fire alarm inspection and maintenance at Pac Beach in accordance with United Facilities Criteria (UFC) 3-600-02, "Operations and Maintenance: Inspection, Testing, and Maintenance of Fire Protection Systems".

4) Notify Grays Harbor at least 120 days prior to MOU expiration thereby assuring continuous coverage.

b. Grays Harbor will:

1) Upon notification of requested services, dispatch apparatus and personnel as in the judgment of the fire district official receiving the notification should be sent, with instruction as to their mission.

6. Other Provisions.

a. It is mutually agreed that nothing herein will be construed as obligating either party to violate existing laws or regulations.

b. All services provided by the parties are subject to the constraints of available resources (personnel, funds, and equipment).

c. In accordance with reference (c), Grays Harbor may request reimbursement for direct expenses and losses that are additional fire protection and emergency medical services costs above the normal operating costs incurred while rendering assistance under this agreement.

d. The parties hereto waive all claims against each party for compensation for any loss, damage, personal injury, or death occurring as a consequence of the performance of this agreement.

e. Grays Harbor emergency services personnel shall maintain such insurance for medical malpractice and liability as required by Washington State Law and local municipal ordinances.

f. There are currently no hazards at Pac Beach that are outside the limits of the response expectations for Grays Harbor that require specialty equipment or training. Should future hazards be mutually identified as outside the limits of the response expectations for Grays Harbor that require specialty equipment or training, Pac Beach will procure and stage the specialty equipment on the facility and provide any specialty training.

7. Points of Contact.

a) For Grays Harbor: JOHN COLLUM, Fire Chief, Grays Harbor Fire District No.8, (360) 276-4807.

b) For Pac Beach: Regional Support Agreement Manager, (360) 396-1935.

8. Effective Date. This MOU is effective upon signatures and shall remain in force until renewal, modification, or termination by mutual consent of the parties concerned. Requests for renewal, modification, or termination by either party shall be in writing, at least 120 days in advance of the proposed effective date. This agreement may also be terminated by either party upon giving at least 180 days written notice to the other party. Each party shall conduct an annual review of this agreement to evaluate its effectiveness and determine the need for renewal, continuation or modification. Review shall be initiated, by either party, 120 days prior to annual effective date. Termination by either party shall not provide the basis for any claim against the other party.

1-11-10		12 DEC 2010	
John Collum Fire Chief Grays Harbor Fire District No.8	Date	A. P. VERHOFSTADT, P.E. Executive Director Commander, Navy Region Northwest	Date

APPENDIX D

PROJECTS

EPR Number/ Project Title	INRMP Section	Funding Source	ERL *	Legal Drivers	Implementation Frequency	Year	Natural Resources/ INRMP Metrics Focus Area	Project Goals	Project Cost Estimate ($)
68967NR009	1.7	O&MN	4	Sikes Act ESA MBTA	Annual	2016 2017 2018 2019 2020	4. Sikes Act Cooperation 6. INRMP Implementation 7. INRMP Support of Installation Mission	Maintain an updated INRMP in compliance with the Sikes Act	
CHS NW NSE. **Pacific Beach Annex INRMP**. Annual review and update of the INRMP including review for operation and effect at least every 5 years.									
68967NR010		O&MN	4	MMPA ESA MBTA	Create one time. Maintain as needed	2020	3. Recreational use and access	Educate visitors regarding local natural resources	
MMPA NW NSE. **Pacific Beach Annex NR Interpretive Signs**. Create and maintain environmental education/interpretive signs or brochures describing the natural resources existing off the Pacific Beach Annex shorelines.									
68967NR011		O&MN	4	Sikes Act ESA CWA	Periodic	2017 2020	2. Listed Species and Critical Habitat 6. INRMP Implementation	Establish and maintain baseline natural resource maps.	
CHS NW NSE **Pacific Beach Annex INRMP Mapping.** Develop GIS documentation and data in support of the INRMP.									

EPR Number/ Project Title	INRMP Section	Funding Source	ERL *	Legal Drivers	Implementation Frequency	Year	Natural Resources/ INRMP Metrics Focus Area	Project Goals	Project Cost Estimate ($)
Native Landscaping	4.6				As opportunities arise			Establish native vegetation	
Landscaping. When possible and as opportunities arise, incorporate native vegetation into landscaping.									
68742CN001	4.3.2	O&MN	4	ESA MBTA Sikes Act	Periodic	2016 2017 2019 2021	2. Listed Species & Critical Habitat	Gather winter density data useful to ESA consultations and filling data gaps	
1CR NRNW **Marbled murrelet density surveys**. Continue Region-wide commitment to collect winter density date to contribute to at-sea winter population estimates and population trends. Costs reflect total, regional cost.									
TBD	4.10	TBD		OPNAV M-5090.1	As needed	TBD	6. INRMP Implementation 7. INRMP Support of Installation Mission	Reduce damage resulting from stormwater runoff and erosion.	
Stormwater and erosion control. Through Facilities Engineering Acquisition Division, evaluate erosion problems and implement projects to address stormwater runoff and bluff erosion. Projects occur periodically through facilities maintenance actions.									

EPR Number/ Project Title	INRMP Section	Funding Source	ERL *	Legal Drivers	Implementation Frequency	Year	Natural Resources/ INRMP Metrics Focus Area	Project Goals	Project Cost Estimate ($)
TBD	4.8	TBD		E.O. 13112 OPNAV M-5090.1	As needed		6. INRMP Implementation	Encourage native vegetation and eliminate non-native plants.	
Native and non-native vegetation management. Establish native species and develop growing conditions that deter invasive species. The intent is to rehabilitate natural diverse habitat and establish native plant species while controlling invasive species.									
68742NWTJ 1	4.4, 4.6	O&MN	4	MBTA E.O. 13186	Periodic		6. INRMP Implementation	General habitat management.	
Manage for habitat. Reduce fragmentation, increase habitat diversity, maintain wildlife travel corridors etc. Decrease or mitigate habitat damaging agents to reduce habitat degradation (e.g. reduce the spread of disease, mitigate susceptibility to windthrow, etc.) contribute to developing quality habitat for a variety of species.									

* Described in Section 5.4

APPENDIX E

LIST OF ACRONYMS

BASH	Bird/Animal Aircraft Strike Hazard
BMP	Best Management Practices
CEQ	Council on Environmental Quality
CO	Commanding Officer
CNIC	Chief of Naval Installations
CNO	Chief of Naval Operations
CWA	Clean Water Act
CZMA	Coastal Zone Management Act
DoD	U.S. Department of Defense
DON	Department of the Navy (includes U.S. Navy and U.S. Marine Corps)
EA	Environmental Assessment
EFH	Essential Fish Habitat
EIS	Environmental Impact Statement
EO	Executive Order
EPA	U.S. Environmental Protection Agency
EPR	Environmental Program Requirements
ERL	Environmental Readiness Level
ESA	Endangered Species Act
FGS	Final Governing Standards
FONSI	Finding of No Significant Impact
FR	Federal Register
GIS	Geographical Information System(s)
INRMP	Integrated Natural Resources Management Plan
MBTA	Migratory Bird Treaty Act
MILCON	Military Construction
MOU	Memorandum of Understanding
MMPA	Marine Mammal Protection Act
MWR	Morale, Welfare and Recreation
NAVFAC	Naval Facilities Engineering Command
NEPA	National Environmental Policy Act
NMFS	National Marine Fisheries Service
NOAA	National Oceanic and Atmospheric Administration
NRM	Natural Resources Manager
O&MN	Operations and Maintenance, Navy

OPNAV	Office of the Chief of Naval Operations
OPNAVINST	Chief of Naval Operation Instruction
OSD	Office of the Secretary of Defense
QRP	Qualified Recycling Program
PIF	Partners In Flight
RCRA	Resource Conservation and Recovery Act
R&D	Research and Development
RPM	Real Property Maintenance *or* Remedial Project Manager
RV	Recreational Vehicle
SERDP	Strategic Environmental Research and Development Program
TES	Threatened or Endangered Species
USC	United States Code
USDA	United States Department of Agriculture
USGS	United States Geological Survey
USN	United States Navy
USFWS	United States Fish and Wildlife Service
WDFW	Washington Department of Fish and Wildlife

APPENDIX F

TERMS AND DEFINITIONS

Action. A program, activity, project, official policy (such as a rule or regulation), or formal plan directly carried out by a Federal agency (EO 13186.)

Agricultural outleasing. Agricultural outleasing is the use of non-excess DoD lands under a lease to an agency, organization, or person generally for growing crops or grazing domestic animals. The term "agriculture" includes activities related to producing, harvesting, processing, or marketing an agricultural, aquaculture, maricultural, or horticultural commodity, including the breeding, raising, shearing, feeding, caring for, training, and management of livestock, bees, poultry, fish, shellfish, and fur-bearing animals and wildlife, and the planting, cultivating for harvest, or processing short rotation (less than 15 years) forest products (OPNAV M-5090.1, Chapter 12).

Best management practices (BMPs). BMPs are resources management decisions based on the latest professional and technical standards for the protection, enhancement, and rehabilitation of natural resources. BMPs include schedules of activities, prohibitions of practices, maintenance procedures, treatment requirements, operating procedures, control practices, and other management practices to prevent or reduce pollution (OPNAV M-5090.1, Chapter 12).

Biodiversity. Biodiversity is the variety of life forms and the ecological processes that sustain it, including living organisms; the genetic differences among them; the communities and ecosystems in which they occur; and the ecological and evolutionary processes which keep them functioning, yet ever changing and adapting, for a given geographic area (OPNAV M-5090.1, Chapter 12).

Biological Assessment (BA). The information prepared by or under the direction of a Federal agency concerning proposed or listed species, as well as proposed or designated critical habitat that may present in the action area and the evaluation potential effects of the action on such species and habitat during consultation under the ESA (16 U. S. C. 1531 *et seq.*). The purpose of the BA is to determine whether or not the proposed action is likely to (1) adversely affect listed species or designated critical habitat; (2) jeopardize the continued existence of species proposed for listing; or (3) adversely modify proposed critical habitat (Per 50 CFR Part 02).

Bird/Animal Aircraft Strike Hazard (BASH) Prevention Program. An integrated program, based on a BASH Plan, to support the Navy's flying mission. This program promotes land management practices to minimize bird and other animal attractants, and safety procedures to recognize, control, and avoid hazardous bird concentrations. Due to the potential impact on natural resources by a command's BASH Program, natural resources managers shall provide biological expertise to assist naval air installations, air operations, and aviation safety officers in preparing and implementing BASH plans where necessary. BASH plans should be reviewed to ensure consistency and compliance with installation INRMPs and applicable natural resources laws and regulations (OPNAV M-5090.1, Chapter 12).

Candidate species. Plants and animals for which the USFWS has sufficient information on their biological status and threats to propose them as endangered or threatened under the ESA (16 U. S. C.

1531 *et seq.*), but for which development of a listing regulation is precluded by other higher-priority listing activities. The most current list of candidate species can be found at http://endangered.fws.gov/candidates/index.html (Section 4 of the ESA (16 U. S. C. 1531 *et seq*)).

Coastal zone. The coastal zone is the coastal waters (including lands lying in coastal waters and submerged there under and adjacent shore lands) within the meaning of section 304(1) of reference (a) and as more fully defined and described in each coastal state's federally approved CMP. Excluded from the coastal zone is any Navy facility or real estate owned, held in trust, or used by Navy in performance of its mission (OPNAV M-5090.1, Chapter 14).

Conservation. Conservation is the planned management, use, and protection of natural resources that best reflect sustainable use and continued benefit for present and future generations, and the prevention of exploitation, destruction, waste, and neglect (OPNAV M-5090.1, Chapter 12).

Consistent to the Maximum Extent Practicable. The Navy is required by the CZMA to ensure its activities affecting any coastal use or resource to the "maximum extent practicable," which is defined in Section 930.32(a)(1) of 15 CFR Part 930.58(a) (2006), as amended, (71 Fed. Reg. 787-831, 828 (January 5, 2006)), "Coastal Zone Management Act Federal Consistency Regulations" as "fully consistent" with the enforceable policies of the CMP unless Navy compliance is prohibited by law.

The Navy action proponent will not use a general claim of lack of funding or insufficient funds or failure to include the cost of being fully consistent in the federal budget and planning process as a basis for not being consistent to the maximum extent practicable with an enforceable policy of a federally approved state CMP. The presidential exemption described in CZMA is the only circumstance in which the Navy action proponent may rely on a lack of funding as a limitation on full consistency with an enforceable policy (OPNAV M-5090.1, Chapter 14).

Consultation under Section 7 of the Endangered Species Act (16 U. S. C. 1531 *et seq.*).

a) *Formal.* Formal consultation is a process between the USFWS or NMFS and the Federal agency that commences with the Federal agency's written request for consultation under Section 7(a) (2) of the ESA and concludes with the USFWS or NMFS issuance of a Biological Opinion under Section 7(b) (3) of the ESA (50 CFR Part 402).
b) *Informal.* Informal consultation is an optional process that includes all discussions, correspondence, etc., between the USFWS or NMFS and the Federal agency or the designated non-Federal representative prior to formal consultation, if required (Per 50 CFR Part 402).

Cooperative agreement. A cooperative agreement is an assistance vehicle used to acquire goods or services or stimulate an activity undertaken for the public good. Cooperative agreements assume substantial involvement between the Federal agency and recipient during performance of the activity. They may be used to accomplish work identified in the INRMP, and may be entered into with states, local governments, non-governmental organizations, and individuals to provide for the maintenance and improvement of natural resources, or to benefit natural resources research on DoD installations (OPNAV M-5090.1, Chapter 12).

Critical habitat (CH). These are the "(i) the specific areas within the geographical area occupied by the species, at the time it is listed in accordance with the provisions of Section 4 of this Act, on which are found those physical or biological features (I) essential to the conservation of the species and (II) which may require special management considerations or protection; and (ii) specific areas outside the geographical area occupied by the species at the time it is listed in accordance with the provisions of Section 4 of this Act, upon a determination by the Secretary that such areas are essential for the conservation of the species. (B) Critical habitat may be established for those species now listed as threatened or endangered species for which no critical habitat has heretofore been established as set forth in subparagraph (A) of this paragraph. (C) Except in those circumstances determined by the Secretary, critical habitat must not include the entire geographical area that can be occupied by the threatened or endangered species." (Per ESA (16 U. S. C. 1531 *et seq.*)

DoD Partners in Flight (PIF). DoD lands represent a critical network of habitats for neotropical migratory birds, offering these birds migratory stopover areas for resting and feeding, and suitable sites for nesting and rearing their young. DoD has, therefore, developed a policy to promote and support a partnership role in the protection and conservation of resident and migratory birds by protecting vital habitats, enhancing biodiversity, and maintaining healthy and productive natural systems on our lands consistent with the military mission. See the DoD PIF Strategic Plan at http://www.dodpif.org/strategic_plan/index.htm .

Ecosystem. An ecosystem is a dynamic and natural complex of living organisms interacting with each other and their associated physical environment (OPNAV M-5090.1, Chapter 12).

Endangered or Threatened species. A species of fauna or flora that has been listed by USFWS or NMFS for special protection and management under the ESA (16 U. S. C. 1531 *et seq.*).

Environmentally and economically beneficial landscaping. Landscaping, construction, and design practices that support EO 13148, Greening the Government through Leadership in Environmental Management.

Essential fish habitat (EFH). The water and substrates necessary to fish for spawning, feeding, or growth to maturity. (Per the Magnuson-Stevens Fishery Conservation and Management Act (16 USC 1801-1883)

Facility. Any building, installation, structure, land, and other property owned or operated by, or constructed or manufactured and leased to, the Federal Government, where the Federal Government is formally accountable for compliance under environmental regulation (e.g., permits, reports/records and/or planning requirements) with requirements pertaining to discharge, emission, release, spill, or management of any waste, contaminant, hazardous chemical, or pollutant. This includes a group of facilities at a single location managed as an integrated operation, as well as Government-owned contractor-operated facilities (EO 13148).

Federal agency. An executive department or agency that does not include independent establishments, as defined by 5 USC 104.

Fish and wildlife. Any member of the animal kingdom, including without limitation any mammal, fish, bird (including migratory, non-migratory, or endangered bird for which protection is also afforded by

treaty or other international agreement), amphibian, reptile, mollusk, crustacean, arthropod, or other invertebrate, and any part, product, egg, or offspring, thereof, or the dead body or parts thereof (ESA (16 U. S. C. 1531 *et seq.*).

Floodplain. The lowland and relatively flat areas adjoining inland and coastal waters including flood-prone areas of offshore islands, including at a minimum, that area subject to a 1 - percent or greater chance of flooding in any given year. (EO 11988) (NOTE: This is the 100-year floodplain reference, not the 500-year floodplain.) Adverse impacts on floodplains are avoided when possible. The direct or indirect support of floodplain development must be avoided where there is a practicable alternative (DoD Instruction 4715.03).

Forest products. Forest products are those items produced from a forest such as sawtimber, veneer logs, poles, piles, posts, pulpwood, pine straw, stumpwood, bark and other mulch, cones, seeds, mistletoe, firewood, and wood chips (OPNAV M-5090.1, Chapter 12).

Geographic information system (GIS). GISs are an organized collection of computer hardware, software, and geographic data designed to efficiently capture, store, update, manipulate, analyze, and display all forms of geographically referenced data (OPNAV M-5090.1, Chapter 12).

Habitat. Habitat is an area where a plant or animal species lives, grows, and reproduces, and the environment that satisfies its life requirements (OPNAV M-5090.1, Chapter 12).

Invasive species. An alien (exotic, non-native, non-indigenous, or introduced) species whose introduction does or is likely to cause economic or environmental harm or harm to human health (EO 13112).

Jeopardize the continued existence (or Jeopardy). To engage in an action that reasonably would be expected, directly or indirectly, to reduce appreciably the likelihood of both the survival and recovery of a listed species in the wild by reducing the reproduction, numbers, or distribution of that species (50 CFR Part 402).

Land management. Land management are programs and techniques to manage lands, wetlands, and water quality, including soil conservation; erosion control and non-point source pollution; surface and subsurface waters; habitat restoration; control of noxious weed and poisonous plants; agricultural outleasing; range management; identification and protection of wetlands, watersheds, floodplains management, landscaping, and grounds maintenance (OPNAV M-5090.1, Chapter 12).

Listed species. Any species of a fish, wildlife, or plant that has been determined to be endangered or threatened under Section 4 of the ESA (16 U. S. C. 1531 *et seq.*) (50 FR Prt 402) Listed species are found in 50 CFR 17.11-17.12.

Marine environment. Areas of coastal and ocean waters, the Great Lakes, and their connecting waters, and submerged lands there under, over which the United States exercises jurisdiction, consistent with international law (EO 13158).

Migratory bird. A bird with a seasonal and somewhat predictable pattern of movement. (A general definition.) Any bird, whatever its origin and whether or not raised in captivity, which belongs to a species listed in 50 CFR 10.13, or which is a mutation or a hybrid of any such species, including any part,

nest, or egg of any such bird, or any product, whether or not manufactured, which consists, or is composed in whole or part, of any such bird or any part, nest, or egg thereof. (The Migratory Bird Treaty Act (16 U. S. C. 703 *et seq.*) Any of the over 800 species listed in 50 CFR 10.13, including many common ones like Canada geese, barn swallows, and two kinds of starling (EO 13186).

Migratory bird resources. Migratory birds and the habitats upon which they depend (EO 13186).

Mitigation. Lessening the adverse effects an undertaking may cause relative to natural or cultural resources. Mitigation can include limiting the magnitude of the action; repairing, rehabilitating, or restoring the affected resource; avoiding the effect altogether; reducing or eliminating the effect over time by preservation and maintenance operations during the life of the action; and/or compensating for the effect by providing substitute resources or environments (DoD Instruction 4715.03).

Mitigation banking, Actions taken to compensate for future adverse effects of undertakings by providing substitute resources or environments in advance of any specific undertaking (DoD Instruction 4715.03).

Native species. All species of plants and animals naturally occurring, either currently or historically, in any U.S. ecosystem (EO 11987). With respect to a particular ecosystem, species that other than as a result of an introduction historically occurred or currently occurs in that ecosystem (EO 13112).

Natural resources. Natural resources are all elements of nature and their environments of soils, sediments, air, and water. They consist of earth resources (nonliving resources such as minerals and soil components) and biological resources (living resources such as plants and animals) (OPNAV M-5090.1, Chapter 12).

Natural Resources Manager/Coordinator. A natural resources manager is an individual assigned the responsibility of managing installation natural resources on a regular basis and who keeps the chain of command informed of natural resources issues (OPNAV M-5090.1, Chapter 12).

No net loss of military mission. Each INRMP must, to the extent appropriate and applicable, and consistent with the use of the installation to ensure the preparedness of the Armed Forces, provide for "no net loss in the capability of military installation lands to support the military mission of the installation." (Per Section 101(b)(1)(I) of the SAIA). INRMPs are intended principally to help installation commanders manage natural resources more effectively so as to ensure that installation lands remain available and in good condition to support the installation's military mission, i.e., ensure "no net loss in the capability of military installation lands to support the military mission of the installation." Furthermore, appropriate management objectives to protect mission capabilities of installation lands should be clearly articulated in the planning process and should be high in INRMP resourcing priorities. Mission requirements and priorities identified in the INRMP will, where applicable, be integrated in other environmental programs and policies. It is not the intent that natural resources are to be consumed by mission requirements, but sustained for the use of mission requirements. To achieve this, environmental programs and policies must have the goal of preserving the environment for the purpose of the mission (Deputy Under Secretary of Defense (I&E) Memorandum, 10 October 2002, Implementation of Sikes Act Improvement Act: Updated Guidance).

Noxious weeds. Noxious weeds are plant species identified by Federal or state agencies as requiring control or eradication (OPNAV M-5090.1, Chapter 12).

Outdoor recreation. Outdoor recreation is a program, activity, or opportunity dependent on the natural environment, including picnicking, bird-watching, hiking, wild and scenic river use, hunting, fishing, and primitive camping that will not impair or degrade natural resources (OPNAV M-5090.1, Chapter 12).

Recovery of a listed species. The improvement in the status of a listed species to the point at which listing is no longer appropriate under the criteria set out in Section 4(a)(1) of the ESA (16 U. S. C. 1531 *et seq.*) (50 CFR Part 402).

Species. A group of organisms, all of which have a high degree of physical and genetic similarity, generally interbreed only among themselves, and show persistent differences from members of allied groups of organisms (EO 13112).

Species of concern. Species listed in the periodic report, "Migratory Nongame Birds of Management Concern in the United States," priority migratory bird species as documented by established plans (such as Bird Conservation Regions in the North American Bird Conservation Initiative or Partners in Flight physiographic areas), and those species listed in 50 C.F.R. 17.11 (EO 13186).

Stewardship. Stewardship is the responsibility to inventory, manage, conserve, protect, and enhance the natural resources entrusted to one's care in a way that enhances the resources and their benefits for present and future generations (OPNAV M-5090.1, Chapter 12).

Take of listed species. To harass, hunt, harm, pursue, hunt, shoot, wound, kill, trap, capture, or collect, or attempt to engage in any such conduct, per the ESA (16 U. S. C. 1531 *et seq.*), of which Section 9 prohibits "take."

a) *Harass*, in the definition of "take," means an intentional or negligent act or omission that creates the likelihood of injury to wildlife by annoying it to such an extent as to significantly disrupt normal behavior patterns, which include, but are not limited to, breeding, feeding, or sheltering.
b) *Harm*, in the definition of "take," means an act that actually kills or injures wildlife. Such act may include significant habitat modification or degradation where it actually kills or injures wildlife by significantly impairing essential behavior patterns, including breeding, feeding, or sheltering.

Taking, killing, or possessing migratory birds. It is unlawful to pursue, hunt, take, capture, kill; attempt to take, capture, or kill; possess, offer for sale, sell offer to barter, barter offer to purchase, purchase, deliver for shipment, ship, export, import, cause to be shipped, exported, or imported; deliver for transportation, transport, or cause to be transported; carry or cause to be carried; or receive for shipment, transportation, carriage, or export any migratory bird, any part, nest, or egg of any such bird or any part, nest or egg, thereof. To "take" is to pursue, hunt, shoot, wound, kill, trap, capture, or collect; or attempt to pursue, hunt, shoot, wound kill, trap, capture, or collect (Migratory Bird Treaty Act (16 USC 706 et seq.). Furthermore, both "intentional" and "unintentional" take are defined in 50 CFR 10.12:

> *Intentional take.* Take that is the purpose of the activity in question. (As defined in EO 13186.)
>
> *Unintentional take.* Take that results from, but is not the purpose of, the activity in question (As defined in EO 13186). The list of migratory birds protected under the Migratory Bird Treaty Act can be found in 50 CFR Section 10.13. Violations can result in a misdemeanor conviction and a fine up to $15,000.

Threatened species. Any species that is likely to become an endangered species within the foreseeable future throughout all or a significant portion of its range (Per the ESA (16 U. S. C. 1531 *et seq*).

Watershed. A watershed is a geographic area of land, water, and biota within the confines of a drainage divide (OPNAV M-5090.1, Chapter 12).

Wetlands. Wetlands are those areas inundated or saturated by surface or ground water at a frequency and duration sufficient to support a prevalence of vegetation typically adapted for life in saturated soil conditions, such as swamps, marshes, and bogs. Jurisdictional wetlands are those that meet criteria established by the U.S. Environmental Protection Agency regulations and U.S. EPA and Department of the Army guidance (OPNAV M-5090.1, Chapter 12).

ANNEX 1

ANNUAL INRMP EVALUATIONS and UPDATES