INCH-POUND

MIL-HDBK-1013/11
10 February 1995

MILITARY HANDBOOK

INSTRUCTION FOR PLANNING AND DESIGN OF HIGH SECURITY MAGAZINE DOOR CONSTRUCTION PROJECTS

AMSC N/A

AREA FACR

DISTRIBUTION STATEMENT A. APPROVED FOR PUBLIC RELEASE: DISTRIBUTION IS UNLIMITED.

ABSTRACT

This handbook provides criteria for the planning and design of high security magazine door construction projects. This handbook covers upgrades of High Security Naval Facilities Engineering Command (NAVFACENGCOM) Standard Type C and D Box Magazines. It also covers both new construction and upgrade of High Security NAVFAC Standard E and F Box Magazines.

FOREWORD

This manual furnishes planning, design, and construction guidance for military construction projects for upgrading types C, D, E, and F and constructing new types E and F Naval Facilities Engineering Command (NAVFACENGCOM) Standard Box Magazines with high security doors. Government personnel and contractors involved in planning, designing, and implementing high security door installations on box magazines should use the design and performance guidance in this manual.

High security magazine door locking hardware installation guidance and design data are discussed in detail. This handbook is not intended to be a guide in the fabrication of locking hardware, but it does reference design information and points of contact needed to determine price and availability of locking system hardware furnished by the Government.

In addition, this manual furnishes performance and design data for high security magazine door drive systems. It also furnishes design and construction data needed to build high security magazine doors and reinforced magazine headwalls that provide substantial delay times against sophisticated forced entry and explosive attacks.

USE THIS DOCUMENT AS A REFERENCE DOCUMENT FOR PROCUREMENT OF FACILITIES DESIGN AND CONSTRUCTION. DO NOT REFERENCE IT IN MILITARY OR FEDERAL SPECIFICATIONS OR OTHER PROCUREMENT DOCUMENTS.

INSTRUCTION FOR PLANNING AND DESIGN OF HIGH SECURITY MAGAZINE DOOR CONSTRUCTION PROJECTS

CONTENTS

		Page
Section 1	INTRODUCTION	1
1.1	Scope	1
1.1.1	Basic Concept	1
1.1.2	Locking Systems	1
1.2	Application Guidance	2
1.2.1	Applicable Codes Not Covered in this Handbook	2
Section 2	APPLICABLE DOCUMENTS	5
2.1	Government Documents	5
2.1.1	Specifications, Standards and Handbooks	5
2.1.2	Other Government Documents, Drawings, and Publications	5
2.2	Non-Government Documents	7
Section 3	DEFINITIONS	8
3.1	Acronyms Used in this Handbook	8
Section 4	PROJECT PLANNING	10
4.1	Shore Facilities Planning System (SFPS)	10
4.1.1	Shore Facilities Planning Process	10
4.1.2	Planning Services	10
4.2	High Security Magazine Door Installation Planning Guidance	10
4.2.1	Secure Magazine Door Installation Program (SMDIP)	10
4.2.2	Project Initiation	10
4.2.3	Concept Study Funds	11
4.2.4	Final Project Documentation	11
4.2.5	MCs Authorize EFDs to Award MILCON Contracts	11
4.2.6	Estimated Time to Award Contracts	11
4.3	Site Approval	13
4.3.1	General	13
4.3.2	Site Approval for High Security Magazine Installations	13
4.3.3	Site Approval Responsibility	13
4.3.4	Submission of Site Approval Requests	13
4.3.5	Department of Defense Explosive Safety Board (DDESB)	13
4.4	Contents of a Successful Site Approval Request	13
Section 5	SECURE DOOR SYSTEM AND GENERAL REQUIREMENTS	15
5.1	Basic Concept	15
5.2	Magazine Door System	15
5.2.1	Magazine Door	15

		Page
5.2.1.1	Door Fill Material	15
5.2.2	Headwall Structural Components	16
5.2.2.1	Introduction	16
5.2.2.2	High Security NAVFAC Standard Box Magazines (Types C through F)	16
5.3	High Security Magazine Door Drive System	17
5.3.1	Tractor	17
5.3.1.1	Tractor Motors	22
5.3.1.2	Gear Reduction	22
5.3.1.3	Brake	23
5.3.1.4	Disk Brakes	23
5.3.1.5	Self-Braking Motors	23
5.3.1.6	Dynamic and Regenerative Braking Options	23
5.3.2	Drive System Control	24
5.3.2.1	Variable Speed Motor Controllers	24
5.3.2.2	Drive Enclosure	25
5.3.2.3	Control Circuits	25
5.3.2.4	Power Circuits	25
5.3.2.5	Door Position Sensor General Requirements	25
5.3.2.6	Full Travel Position Sensors	25
5.3.2.7	Using Sensors to Change Midspan Door Speed	26
5.3.2.8	HSIL Position Sensor	26
5.3.2.9	Operator Station	26
5.3.2.10	Time Allowed to Open and Close Magazine Doors	28
5.4	Explosive Safety Electrical Requirements	28
5.5	Closing and Opening Doors Manually	28
5.5.1	Manual Disengagement of Brake and Drive Systems	28
5.5.2	Padeye for Manual Door Operation	28
5.6	Cable Reels	28
5.7	Monorail and Related Equipment	29
5.7.1	Monorail Strength	29
5.7.2	Monorail Hardness	29
5.7.3	Monorail Construction	29
5.7.4	Hardness of Monorail Rail Treads	31
5.7.5	Carriers	31
5.7.5.1	Carrier Wheels	31
5.7.5.2	Carrier Lubrication	31
5.7.5.3	Derating Carrier Components	31
5.8	Physical Security Hardware	31
5.8.1	Externally Operated Magazine Doors	31
5.8.1.1	HSIL Modular Box	31
5.8.1.2	Protective Key-Guide	35
5.8.1.3	HSIL MIL-HDBK-1013/6	36
5.8.2	Internally Operated Magazine Doors	36
5.8.2.1	Internally Operated Lock (IOL)	36
5.8.3	Bolt-Work Interlock Subsystem for High Security Magazine Doors	36

			Page
	5.8.3.1	Protecting Bolt-Work Interlock Subsystem from Damage ..	41
	5.8.3.2	Door Indexer	41
	5.8.3.3	Door Stop	43
	5.8.4	Plating Physical Security Hardware with Yellow Dichromate	44
	5.9	Protective Pilaster	44
	5.9.1	Relationship of Pilasters to Doors	44
	5.10	Maximum Magazine Door Beam Spacing	44
	5.11	Electronic Security	44
	5.11.1	Intrusion Detection System	44
	5.11.2	NISEEAST Design Control	45
	5.11.3	IDS Interface with HSIL	45
	5.11.4	Balanced Magnetic Switch (BMS)	45
	5.12	Door Seal	45
	5.13	Monorail and Tractor Canopy	46
	5.14	Operating Instructions	46
Section 6		STRUCTURAL DESIGN CRITERIA	48
	6.1	Introduction	48
	6.2	Design Loads	48
	6.2.1	Explosives Safety	48
	6.2.2	Physical Security	50
	6.3	Door	53
	6.3.1	General	53
	6.3.2	Design Stresses	53
	6.3.3	Allowable Deflections	54
	6.3.4	Design Procedure	56
	6.4	Headwall	58
	6.4.1	Design Stresses	59
	6.4.1.1	Reinforcing Steel	59
	6.4.1.2	Concrete	59
	6.4.2	Allowable Deflections	60
	6.4.3	Design Procedure	61
	6.5	Computer Programs	63
	6.5.1	SHOCK	63
	6.5.2	SOLVER	63
Section 7		QUALITY CONTROL	65
	7.1	Locking Door Edge	65
	7.1.1	Door Flatness	65
	7.2	Adjustability of Carrier Links	65
	7.3	Vertical Adjustment of Monorails	65
	7.4	Horizontal Adjustment of Monorails	65
	7.5	Rebound Trench Clearance	65
	7.6	Cycling the Locking System	66

			Page
Section	8	DESIGN CHECKLIST	71
	8.1	Drive System Electrical Requirements Checklist	71
	8.2	Tractor Requirements Checklist	72
	8.3	Physical Security Requirements Checklist	72
	8.4	General Mechanical Checklist	73

FIGURES

Figure	1	Front Cutaway View of High Security Magazine Door Equipped with an HSIL	3
	2	View of Bolt-Work Interlock Assembly Mounted on High Security Magazine Door Equipped with an HSIL	4
	3	High Security Magazine Door Cross Section	16
	4	Conceptual Design of Door Restraint System for High Security Magazine Door	18
	5	High Security Magazine Door Top Rebound System and Canopy	19
	6	Tractor Attributes	20
	7	Secure Magazine Door Drive System Components	21
	8	Weather Resistant Magazine Door Drive System Control Station	27
	9	Monorail Characteristics	30
	10	HSIL Modular Box	32
	11	Two Key HSIL Opening Procedure	33
	12	Two Key HSIL Securing Procedure	34
	13	Protective Key-Guide	35
	14	Internally Operated Lock	37
	15	Internally Operated Lock (IOL) Shown in Locked Mode	38
	16	IOL Unlock Procedure	39
	17	Bolt-Work Interlock Components	40
	18	Door Indexer	42
	19	Internally Operated Door as Seen From Inside a Magazine	43
	20	Externally Operated High Security Magazine	47
	21	Definition of Design Blast Loading	49
	22	Description of Input Parameters for Shock	51
	23	Reduced Surface Parameter for Shock	52
	24	Dynamic Increase Factor for Yield Stress of ASTM A-36 Steel at Various Strain Rates	55
	25	Using an Imaginary Horizontal Reference Plane to Ensure that Magazine Doors Hang Vertically	66
	26	Locking Edge Flatness	67
	27	Door Flatness	68
	28	Side to Side Adjustsability of Carrier Link Plates	69
	29	Trench Clearances	70

TABLES

			Page
Table	1	Sample Schedule for High Security Magazine Door Design	12
	2	Explosives Safety Design Blast Loads for NAVFAC Standard Box Magazines	48
	3	Physical Security Design Blast Loads for NAVFAC Standard Earth-Covered Box Magazines	50
	4	Dynamic Design Stresses for ASTM A36 Steel	55
	5	Physical Security Design Blast Loads for Doors of NAVFAC Standard Box Magazines	60
REFERENCES			74

Section 1: INTRODUCTION

1.1 Scope. This document covers physical security, operational, and explosive safety door design requirements for the High Security Naval Facilities Engineering Command (NAVFAC) Standard Box Magazine Designs. Design, planning, and initiation of high security magazine upgrade and new construction projects are covered. Magazine door and headwall designs based on this document will provide forced entry delay times consistent with those for box magazine walls and roofs. The forced entry design threat includes unlimited hand, power, and thermal tools, and limited explosives. The door system design will withstand attacks with unlimited hand, power, and thermal tools for 20 minutes, and will withstand a single attack using limited explosives. The high security magazine door will also meet explosive safety requirements. In addition to improving the physical security of a box magazine, application of the information in this handbook will provide a reliable door system.

1.1.1 Basic Concept. The high security magazine door has been designed to provide 20 minutes of delay against sophisticated, high threat, forced entry attacks. Magazine door system designs based on this handbook will meet applicable safety and operational requirements and provide substantial physical security. Each high security magazine door system includes:

a) a door with internal I-beam reinforcement that is filled with lightweight refractory concrete;

b) a high security lock and bolt-work interlock subsystem;

c) an Intrusion Detection System (IDS);

d) a Pulse Wave Modulated (PWM) programmable three-phase motor controller;

e) a motorized tractor;

f) a monorail beam;

g) components required to restrain the door following exposure to an explosion.

1.1.2 Locking Systems. There are two possible high security locks that can be used on magazine doors; both are covered in this handbook. This handbook does not cover padlock and hasp hardware used on Standard NAVFAC Earth-Covered Magazines that do not incorporate high security doors. High security doors equipped with a High Security Internal Lock (HSIL) can only be locked and unlocked from outside a magazine and will be referred to as externally operated locks. Doors that are equipped with the Internally

Operated Lock (IOL) can only be locked and unlocked from inside a magazine. The IOL is intended for use only on multibay magazines. Equip at least one door on each multibay magazine with the HSIL. Some features of a high security magazine door are illustrated in Figures 1 and 2; the illustrations describe a door equipped with the HSIL. The access ports shown in Figures 1 and 2 would not be present if the door were equipped with the IOL. The modular lock box shown in Figure 1 would also be different for a door equipped with the IOL.

1.2 Application Guidance. Use this handbook to guide the design and planning of high security magazine door system construction projects. This handbook gives physical security, drive system, and explosives safety design guidance. Navy designers, design agencies, weapons officers, and others will benefit from the information contained herein. This handbook is directed toward people designing and planning high security magazine projects. Design agencies like Engineering Field Divisions (EFDs) and Public Works Centers (PWCs) can use this handbook to help manage the design and construction high security magazine project contracts.

1.2.1 Applicable Codes Not Covered in this Handbook. Do not ignore applicable building and structural codes that this handbook does not address. Ensure that high security magazine door systems based on this handbook meet all applicable building and structural codes not covered herein.

1.2.2 Additional Information. For additional information and guidance, contact the Naval Facilities Engineering Service Center, Security Engineering Division (ESC 66), 560 Center Drive, Port Hueneme, CA 93043-4328; telephone commercial (805) 982-1581, DSN 551-1581, fax (805) 982-1253.

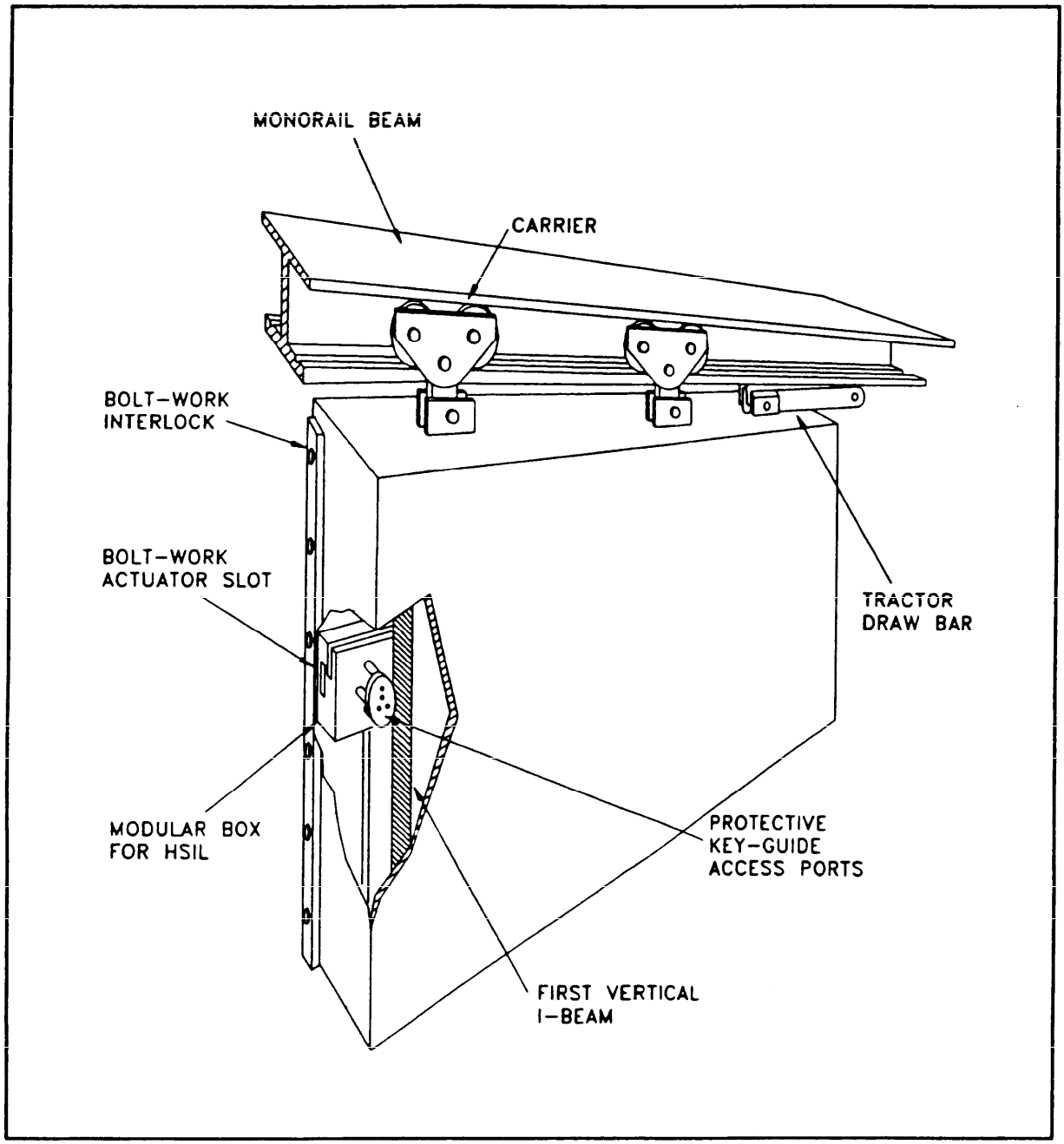

Figure 1
Front Cutaway View of High Security
Magazine Door Equipped with an HSIL

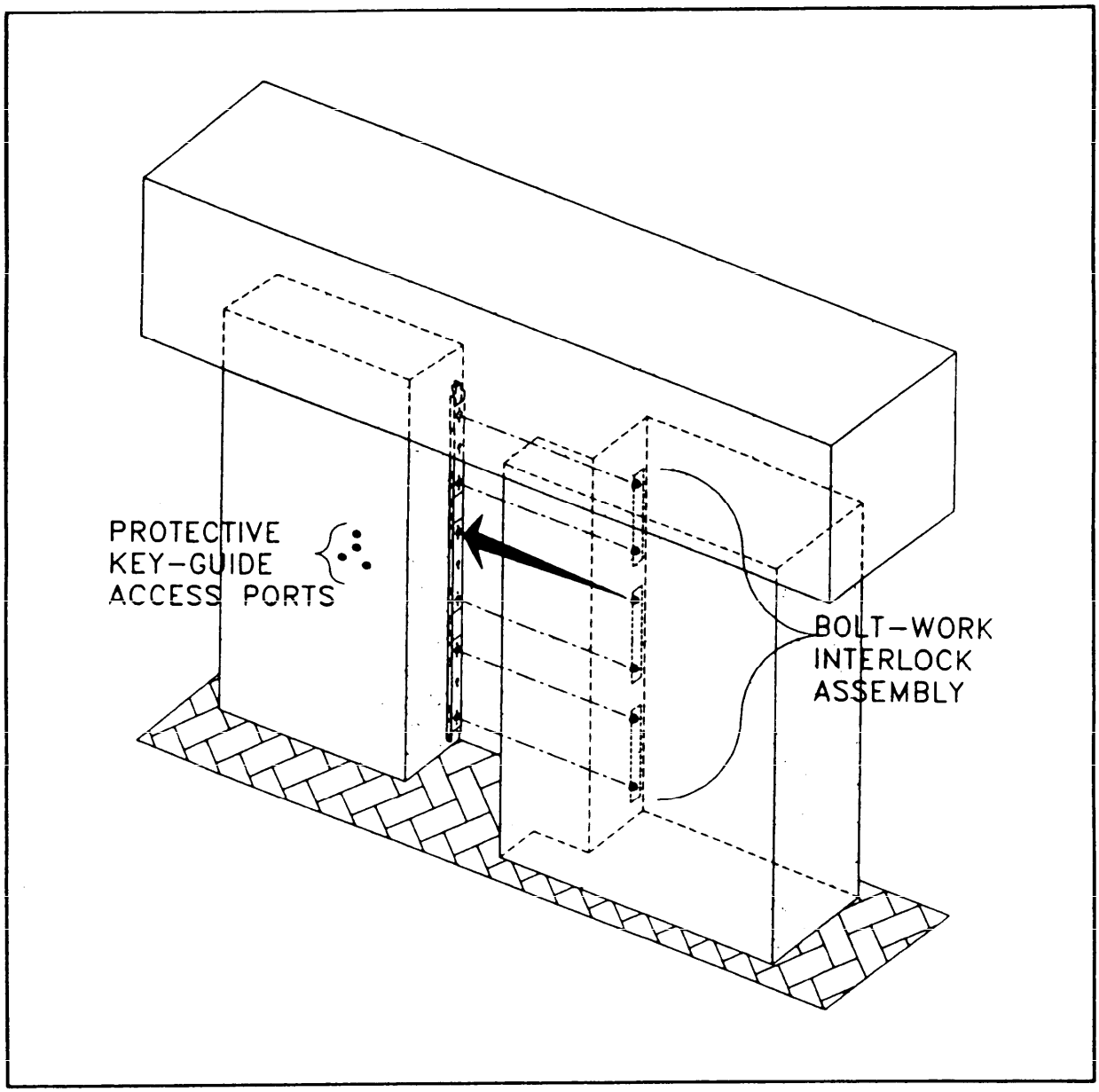

Figure 2
View of Bolt-Work Interlock Assembly Mounted on
High Security Magazine Door Equipped with an HSIL

Section 2: APPLICABLE DOCUMENTS

2.1 Government Documents

2.1.1 Specifications, Standards, and Handbooks. The following specifications, standards, and handbooks form a part of this document to the extent specified herein. Unless otherwise specified, the issues of these documents are listed in the Department of Defense Index of Specifications and Standards (DODISS) and supplement thereto, cited in the solicitation.

Military Handbook (MIL-HDBK) 1013/6, High Security Internal Lock (HSIL) Description, Operation, and Maintenance (in publication, scheduled for completion January 1995).

NAVFAC P-397, Structures to Resist the Effects of Accidental Explosions.

NAVFAC Standard Specification, Lightweight Concrete Door Fill Material.

NAVSEA OP-5, Ammunition and Explosives Ashore, Safety Regulations for Handling, Storage, Production, Renovation, and Shipping.

2.1.2 Other Government Documents, Drawings, and Publications.

Naval Facilities Engineering Service Center:

UG-0020, SOLVER User's Guide, Version 2.2, Dynamic Response Analysis of Single Degree of Freedom Systems, Aug 1989.

SHOCK Program User's Manual, Version 1.0, Jan 1988.

List of AutoCad Version 12 Drawings. These AutoCad Version 12 drawing files are available from Naval Surface Warfare Center (NAVSURFWARCEN), Louisville, Kentucky, Code 304.

File Names	Drawing Titles
89-9-11F.DWG	Lock, Details
91-21-1F.DWG	Inactive Door Locking System, Box-Out and Installation, Assemblies and Details
91-26-1F.DWG	Inactive Door Locking System, Lock System, Assemblies and Details
91-26-2F.DWG	Inactive Door Locking System, Lock Box, Assembly and Details

91-26-3F.DWG	Inactive Door Locking System, Door-Track Assemblies and Details
91-26-4F.DWG	Inactive Door Locking System, Knob and Miscellaneous Assembly and Details
91-36-1F.DWG	Active/Inactive Doors, Bolt-work System, Assembly and Details
91-36-2F.DWG	Active/Inactive Doors, Bolt-work System, Assemblies and Details
91-37-1F.DWG	Active Door Locking System, HSIL Box-out, Assembly and Details
91-37-2F.DWG	Active Door Locking System, HSIL Box-out, Installation Details
91-43-1F.DWG	Active Door, IDS System, Assembly and Details
91-44-1F.DWG	Active/Inactive Doors, Doorstops & BMS, Assemblies and Details
91-44-2F.DWG	Active/Inactive Doors, Door Indexer/Mounting Channel, Assembly and Details
92-4-1F.DWG	Active Door (Vertical Framing), High Security Magazine Door, Active Lock System
92-4-2F.DWG	Inactive Door (Vertical Framing), High Security Magazine Door, Inactive Lock System

Naval Facilities Engineering Command:

Naval Facilities Engineering Command Instruction (NAVFACINST), 11010.44, Shore Facilities Planning Manual.

Naval Facilities Engineering Command Instruction (NAVFACINST), 11010.63, Planning Services for Navy and Marine Corps Shore Activities.

NAVFAC form, 11014/64A, Special Projects Request (interim). NAVFAC form 11010/31, Site Approval Request.

NAVFAC form 11014/66, Annual Inspection Summary.

List of Standard NAVFAC drawings.

Magazine	Drawing Numbers
Type C Box	1404430 through 1404444, Sep 1985
Type D Box	1404465A through 1404478, Sep 1985
Type E Box	14023 through 14037, Jun 1987
Type F Box	14041 through 14055, Jun 1987

Definitive	Drawing Numbers
Nuclear Weapons Storage	1404126 through 1404131

2.2 Non-Government Documents.

National Fire Protection Association (NFPA) 70, National Electric Code (NEC); Article 430 - Motors, Motor circuits, Controllers; Article 500 - Hazardous Locations; Article 725 - Remote-Control Signaling Circuits; most recent edition.

American National Standards Institute, Inc, ANSI MH 27.1 1981, American National Standard for Underhung Cranes and Monorail Systems.

Section 3: DEFINITIONS

3.1 Acronyms Used in this Handbook.

AA&E	Arms Ammunition and Explosives
ACI	American Construction Institute
AE	Architectural Engineering Firm
AIS	Annual Inspection Summary
AISC	American Institute of Steel Construction
AISI	American Iron and Steel Institute
ANSI	American National Standards Institute
ASTM	American Society of Testing and Materials
AWG	American Wire Gauge
BHN	Brinell Hardness Number
BMS	Balanced Magnetic Switch
CBD	Commerce Business Daily
CCB	Construction Criteria Base
CNO	Chief of Naval Operations
COMNAVFACENGCOM	Commander, Naval Facilities Engineering Command
DDESB	Department of Defense Explosive Safety Board
DIF	Dynamic Increase Factor
DOD	Department of Defense
DODISS	Department of Defense Index of Specifications and Standards
EFD	Engineering Field Division
EFDs	Engineering Field Divisions
EMI	Electromagnetic Interference
EMR	Electromagnetic Radiation
FPM	Feet per Minute
HERF	Hazards of Electromagnetic Radiation to Fuel
HERO	Hazards of Electromagnetic Radiation to Ordnance
HERP	Hazards of Electromagnetic Radiation to Personnel
HSIL	High Security Internal Lock
IOL	Internally Operated Lock
IDS	Intrusion Detection System
MC	Major Claimant
MILCON	Military Construction
MRP	Maintenance of Real Property
NAF	Non-Appropriated Funds
NAVAIRSYSCOM	Naval Air Systems Command
NAVFAC	Naval Facilities Engineering Command
NAVFACENGCOM	Naval Facilities Engineering Command
NAVFACINST	Naval Facilities Engineering Command Instruction
NAVSEA	Naval Sea Systems Command
NAVSEACENANT	Naval Sea Support Center, Atlantic
NAVSEACENPAC	Naval Sea Support Center, Pacific
NAVSEASYSCOM	Naval Sea Systems Command
NAVSURFWARCEN	Naval Surface Warfare Center
NCIS	Naval Criminal Investigative Service

NEC	National Electric Code
NEMA	National Electric Manufacturers Association
NEW	Net Explosive Weight
NFESC	Naval Facilities Engineering Service Center
NFGS	Naval Facilities Engineering Command Guide Specification
NFPA	National Fire Protection Association
NIF	Navy Industrial Funds
NISEEAST	Naval Command, Control and Ocean Surveillance Center, In-Service Engineering, East Coast Division, Charleston
NISEWEST	Naval Command, Control and Ocean Surveillance Center, In-Service Engineering, West Coast Division, Detachment Pearl
O&M,N	Operation and Maintenance, Navy (funds)
ORDSTA	Ordnance Station
PWM	Pulse Width Modulated
RL	Requirements List
SAE	Society of Automotive Engineers
SECNAV	Secretary of the Navy
SFPS	Shore Facilities Planning Process
SMDIP	Secure Magazine Door Installation Program
SPAWARSYSCOM	Space and Naval Surface Warfare System Center
UDP	User Data Package
UG	User Guide
UL	Underwriters Laboratories
UV	Ultra-Violet
VAC	Voltage, Alternating Current

Section 4: PROJECT PLANNING

4.1 Shore Facilities Planning System (SFPS). The Chief of Naval Operations (CNO) assigned responsibility to establish and implement a global planning process for Navy and Marine Corp Shore Facilities to NAVFAC. The CNO's goal was to ensure that the current and future mission requirements of Navy and Marine Corp Shore Activities were met. Consequently, NAVFAC established the Shore Facilities Planning System (SFPS). The SFPS is a data exchange and analysis network made of data bases and data evaluation processes. NAVFAC ensures that the independent data bases are maintained. To ensure that data is available for the SFPS, NAVFAC provides services to activities and claimants. These services produce data for the SFPS.

4.1.1 Shore Facilities Planning Process. NAVFACINST 11010.44, Shore Facilities Planning Manual, guides the preparation of Military Construction (MILCON) and Non-Appropriated Funded (NAF) project documentation. It also explains the actions and documentation needed to get site approvals for MILCON and NAF projects. NAVFAC planning processes are complex. Projects covered by this handbook will not be funded with NAF. They will be funded with MILCON funds. Do not depend solely on this document for NAVFAC planning information.

4.1.2 Planning Services. NAVFACINST 11010.63, Planning Services for Navy and Marine Corps Activities, describes installation planning services available to activities. The services are provided to help activities identify their present and future mission requirements and also to provide interrelated NAVFAC SFPS data bases with accurate input. NAVFAC offers several services. To obtain specific information on services offered, refer to NAVFACINST 11010.44.

4.2 High Security Magazine Door Installation Planning Guidance. Use the following to guide the preparation of documentation needed to upgrade or build new magazines that will feature high security magazine doors. This guidance complements the SFPS.

4.2.1 Secure Magazine Door Installation Program (SMDIP). CNO (N09N) appointed the Naval Surface Warfare Center (NSWC), Ordnance Station (ORDSTA), Louisville, Kentucky, Code 304 as the Program Manager for the high security magazine door installation program. This appointment became effective on April 10, 1992. NSWC ORDSTA Louisville, Code 304 will rank MILCON requirements for upgrade and new construction of high security magazines. They will advise CNO and Major Claimants (MCs) of the relative ranks of scheduled high security magazine installations. Activities identified as sites for high security magazines must send copies of all funding, design, criteria, and site approval documentation to NSWC ORDSTA Louisville and jurisdictional EFDs.

4.2.2 Project Initiation. Activities must complete a Project Data Sheet (PDS) for each high security magazine upgrade and new construction project. Submit the PDS up the chain of command to the MC. Send copies of the PDS to NSWC ORDSTA and your jurisdictional EFD. After submission of the PDS, list

the lack of new or upgraded magazines as deficiencies. To do this, add a description of the deficiency to your activity's NAVFAC form 11014/66, Annual Inspection Summary, until project completion.

4.2.3 Concept Study Funds. After the PDS has been submitted, use Operations and Maintenance, Navy (O&M,N) funds or Navy Industrial Funds (NIF) to conduct a concept study. You cannot use MILCON funds to pay for the concept study or preparation of MILCON project documentation.

4.2.4 Final Project Documentation. If no concept study is required, or if a concept study has already been conducted with O&M,N funds, the activity should prepare the final project documentation and forward it to the MC. The activity's Weapons Officer should assist his activity with final MILCON project documentation. The activity must complete and forward DD form 1390, Military Construction Data, to the MC. DD form 1390 is the means to get the project listed on the MILCON Requirements List (RL). Activity public works offices are tasked to provide technical certification of final MILCON project documentation. If an activity does not staff engineering personnel qualified to prepare and certify the submission, then help should be sought from the jurisdictional EFD. Once completed, forward final documentation to the MC. Send final MILCON project documentation to the MC and send copies to the jurisdictional EFD and NSWC ORDSTA Louisville.

4.2.5 MCs Authorize EFDs to Award MILCON Contracts. MCs will take 1 to 2 weeks to review final project documentation. If the MC approves the project a message will be sent to the requesting activity and the jurisdictional EFD. The message will authorize the jurisdictional EFD to go out for design or design and construction bid for the amount of funding specified in the final documentation.

4.2.6 Estimated Time to Award Contracts. Funding documents will be sent to a selected design agency by the MC. The design agency will probably be the jurisdictional EFD but on occasion may be a public works office. When a funding document is received by a design agency, an advertisement will be placed in the Commerce Business Daily (CBD). CBD advertisements can be used to attract qualified design and construction contractors. CBD advertisements will run for 45 to 60 days. It will take approximately 1 week to process bids and award contracts, 15 days to start the work, and 3 to 6 months to complete the project. Table 1 is a typical time table for a high security magazine design.

Table 1
Sample Schedule for High Security Magazine Door Design

Who	Action	Task Days	Total Elapsed Days
Activity	prepares PDS.	7	7
Activity	submits PDS to MC and sends EFD copies.	7	14
EFD	forwards PDS to NSWC ORDSTA, Code 304.	7	21
MC	funds concept study.	14	35
EFD	receives funding and authorization to proceed with concept study.	5	40
EFD	prepares CBD advertisement.	2	42
EFD	awards AE contract for concept study using O&M,N or NIF funds.	50	92
AE	completes study.	60	152
Activity	prepares final MILCON project documentation.	14	166
Activity	submits MILCON project documentation to MC and sends copies to jurisdictional EFD.	1	167
EFD	forwards copies of MILCON project documentation NSWC ORDSTA and CNO/OP-09N.	7	174
NCIS & MC	approve concept and enters project into MILCON RL.	14	188
EFD	awards AE MILCON design contract	60	248
AE	sends MILCON 35 percent design to EFD.	30	278
EFD	reviews 35 percent MILCON design and furnishes comments to AE.	14	292
AE	sends 100 percent MILCON design to EFD.	60	352
EFD	reviews 100 percent MILCON design and sends comments to AE.	14	366
AE	sends final MILCON design to EFD.	14	380
EFD	releases final MILCON design.	7	387

4.3 Site Approval

4.3.1 General. The site approval process is used to ensure that safety, operational, functional, and land planning practices and criteria have been properly applied to Navy construction projects. Safety certifications are an important part of site approval evaluations for safety and security encumbered projects. Copies of site approval requests for construction projects must be submitted with the final MILCON project documentation. MILCON projects are reviewed prior to sending MILCON budgets to Congress. This assures that a current site approval is in effect.

4.3.2 Site Approval for High Security Magazine Installations. High Security NAVFAC Standard Box Magazines will be used to store conventional Arms, Ammunition, and Explosives (AA&E) as well as special weapons. Projects that include construction and upgrade of high security magazines will be categorized as special projects. These projects will be encumbered with safety criteria due to the war materials that are stored in Navy magazines. Therefore, high security magazine construction and repair projects require site approvals. Site approvals for these projects will require Washington level review.

4.3.3 Site Approval Responsibility. The EFD that has jurisdiction over proposed upgrade and new construction of high security magazine sites is responsible for managing and granting site approvals.

4.3.4 Submission of Site Approval Requests. Submit NAVFAC 11010/31, Site Approval Request Form, to the EFD that has jurisdiction over the proposed high security magazine site. Submit this site approval request with the final MILCON documentation.

4.3.5 Department of Defense Explosive Safety Board (DDESB). CNO is the official point of contact to the DDESB. EFDs should submit explosive safety certification requests to Naval Sea Systems Command (NAVSEASYSCOM), Code 6651. After review, NAVSEASYSCOM forwards their comments to CNO. CNO decides if explosive safety site certification requests need to be forwarded to the DDESB for explosive safety certification. In some cases, it is within the authority of CNO to grant explosive safety certifications. However, it is unlikely that this will happen for high security magazine projects. Typically, CNO will forward the safety certification requests to the DDESB. EFDs will use input from NAVSEASYSCOM and the DDESB to decide if the site approval request meets explosive safety criteria. Safety criteria is defined in NAVSEA OP-5, Ammunition and Explosives Ashore Safety Regulations for Handling, Storing, Production, Renovation and Shipping.

4.4 Contents of a Successful Site Approval Request

a) 100 percent drawings;

b) 100 percent specifications;

c) design calculations;

d) current area maps that describe the nature and location of existing base operations, especially airfields, AA&E and special weapons storage sites, fuel storage and distribution centers, and radiation emitting devices;

e) maps and documentation that describe location and nature of future base installations, especially airfields, AA&E and special weapons storage sites, fuel storage and distribution centers, and radiation emitting devices; and

f) completed NAVFAC form 11010/31, Part one and Part two divisions A, B, and C.

Section 5: SECURE DOOR SYSTEM AND GENERAL REQUIREMENTS

5.1 Basic Concept. The main concept is to provide protection against forced entry threats. The magazine doors and their supporting elements must be designed to withstand a forced entry attack. Threats include the use of unlimited hand, power, and thermal tools and limited explosives. The physical security objective is to provide a magazine door with security equivalent to the other magazine structural elements. Most threats can be neutralized by providing a door cross section resistant to these threats and pilaster that prevents access to the door lock. Protecting against the explosive threat requires that a door cross section and door supports be designed to resist loads resulting from an external explosion.

5.2 Magazine Door System

5.2.1 Magazine Door. The minimum door cross section is shown in Figure 3. Due to design constraints the door thickness must be held constant at 10.75±0.125 inches. Furnish each magazine door with ASTM A36 steel plates for both faces of each door. Install ASTM A36 I-beams in each door. Hold I-beam depth constant at 10 inches. If a stronger cross section is required to resist the blast load, the door can be strengthened by increasing the weight per foot of the 10-inch deep I-beams or by placing beams closer together than 15 inches O.C. Hold the distance between the locking edge of each magazine door, where the bolt-work interlock subsystem is mounted, and the C channel constant at 15 inches (see Figure 3). Do not change the thickness of the inner or outer steel plates that contain the beams; do not change the depth of the beams. The locking systems that are used with high security magazine doors require that beam depth and door skin thickness are held constant at the values specified in Figure 3. Refer to Figure 3 for detailed door cross-section information. The HSIL or IOL modular box, door carrier reinforcements, and expanded metal must be installed in each door before it is filled with lightweight concrete. Use C 10x20 channel on the locking door edge as specified in Figure 3. The channel used around the remaining perimeter can be altered as long as the magazine door global stiffness modulus is maintained (see Chapter 6).

5.2.1.1 Door Fill Material. Fill doors with lightweight non-asbestos concrete with a density of 59 to 71 pound (mass)/cubic foot. The lightweight door fill material is specified in a NAVFAC standard specification that is currently in publication. To get copies of the NAVFAC standard specification for Lightweight Concrete Door Fill Material, contact NAVSURFWARCEN, Louisville, Kentucky, Code 304. By 1996, the standard specification will be available on the National Institute of Building Science Construction Criteria Base (CCB). The NAVFAC standard specification, Lightweight Concrete Door Fill

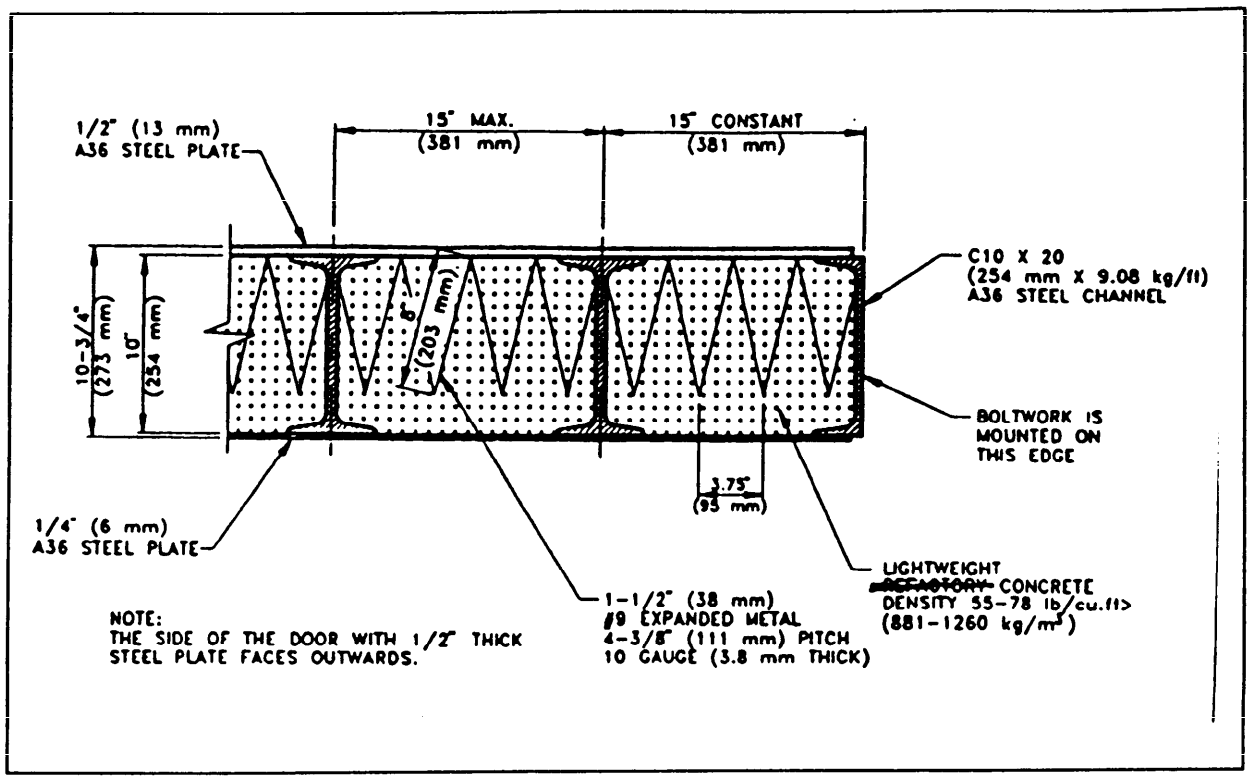

Figure 3
High Security Magazine Door Cross Section

Material, designates the recipe for the lightweight concrete and also describes mixing, pouring, and curing procedures for the material. In addition, it specifies required wet densities and strength of the lightweight concrete.

5.2.2 Headwall Structural Components

5.2.2.1 Introduction. The magazine doors are located in the magazine headwall. The headwalls of box magazines are reinforced with pilasters and header beams. Evaluate concrete headwall components to determine if they can support blast loads and subsequent explosive rebound loads. These structural elements must support the door during both physical security and explosive safety blast loads. For specifics on explosive blast loading, refer to Section 6.

5.2.2.2 High Security NAVFAC Standard Box Magazines (Types C through F). NAVFAC is currently supporting four standard high security box magazines. The only difference between high security box magazines and regular box magazines is the door system. High Security NAVFAC Standard Box Magazines are an option

in the standard design. All NAVFAC box magazines have interior width, number of interior bays, number of doors, width of door openings, and external door dimensions in common. Some of the characteristics of NAVFAC Standard Box Magazines, Types C through F are:

a) Type C - Interior width = 96 feet, 8 inches; three bays; three doors; and 25-foot wide door openings.

b) Type D - Interior width = 160 feet, 8 inches; five bays; five doors; and 25-foot wide door openings.

c) Type E - Interior width = 96 feet, 8 inches; three bays; three doors; and 16-foot wide door openings.

d) Type F - Interior width = 160 feet, 8 inches; five bays; five doors; and 16-foot wide door openings.

The doors are constructed with vertical I-beam stiffeners and are treated as one-way members simply supported at the top (header beam) and bottom (trench). The direct blast loads acting on the door are thus transmitted to the trench and header beam. The door reaction loads going into the trench are directly transmitted into the foundation. This trench must be capable of resisting both positive and negative (rebound) door reaction loads. The door reaction load going into the header beam is transmitted into the adjacent pilasters and then into the foundation and magazine roof. This header beam must also be capable of resisting both positive and negative door reaction loads. The conceptual design for restraining the door is shown in Figures 4 and 5.

5.3 High Security Magazine Door Drive System

5.3.1 Tractor. Figure 6 describes a typical tractor and Figure 7 shows the conceptual relationship between a magazine door and its tractor, carriers, and tractor control cable reel. Figure 1 shows a draw bar used to connect a magazine door to its tractor. Tractors must conform to the standards set forth in American National Standards Institute (ANSI) MH 27.1, American National Standard for Underhung Cranes and Monorail Systems. In addition, comply to the following directions:

a) Select tractors that can support their own weight.

b) Connect tractors to magazine doors with draw bars.

c) Design tractor to door draw bar connections to compensate for lateral movement of doors relative to tractors.

d) Select tractors that have sealed hydraulic couples that transmit power from motors to mechanical gear reduction units.

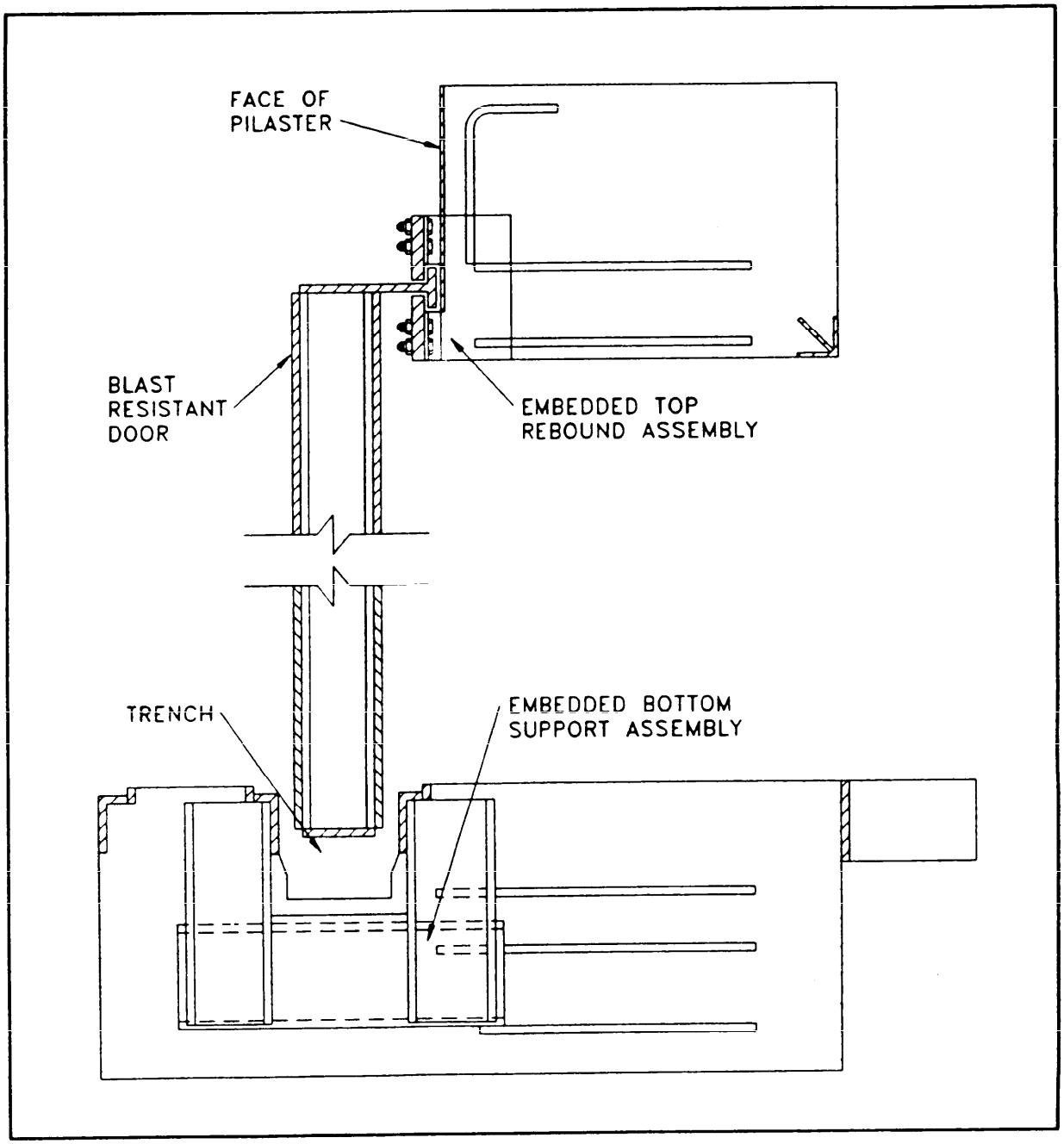

Figure 4
Conceptual Design of Door Restraint
System for High Security Magazine Door

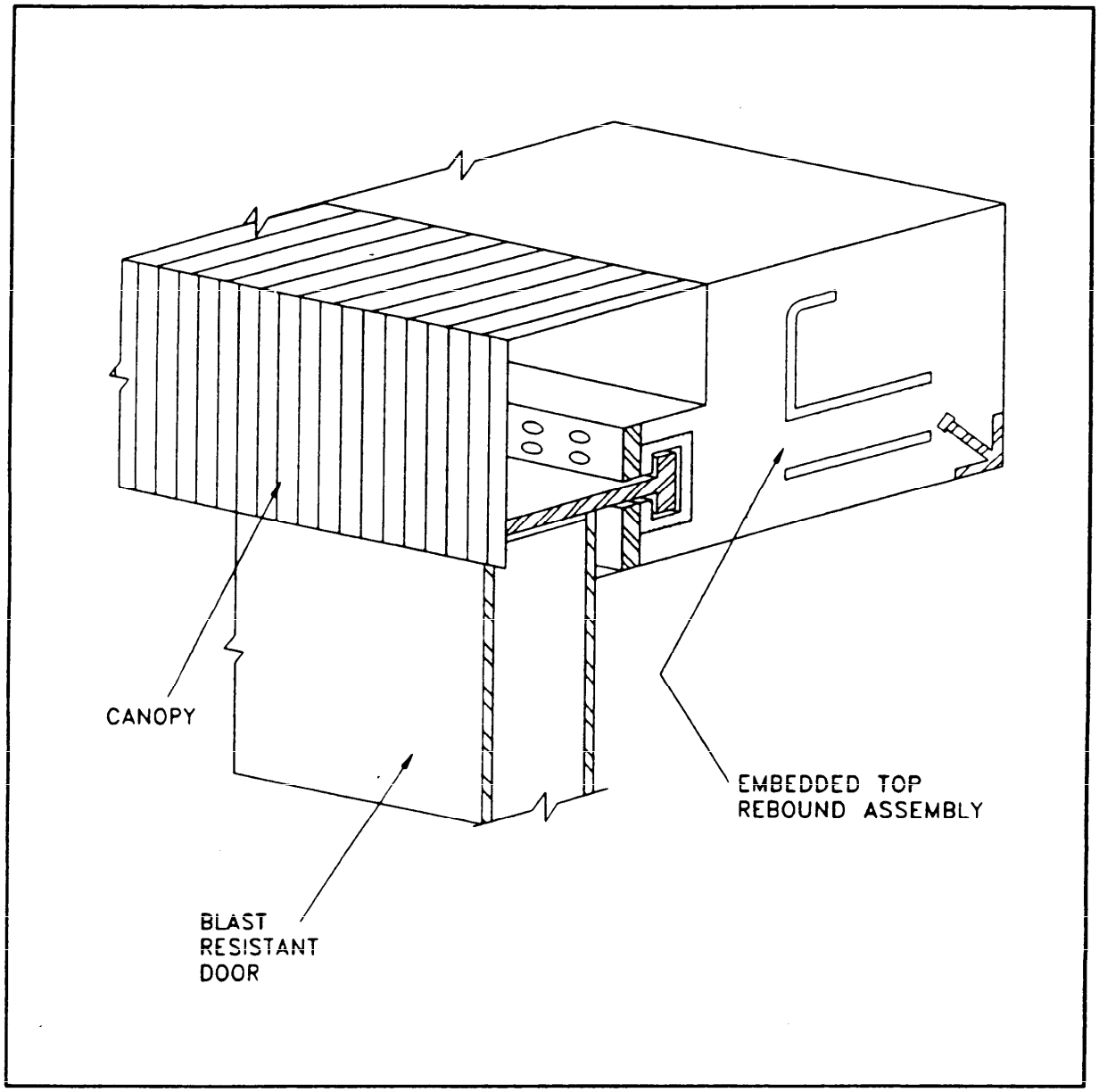

Figure 5
High Security Magazine Door Top Rebound System and Canopy

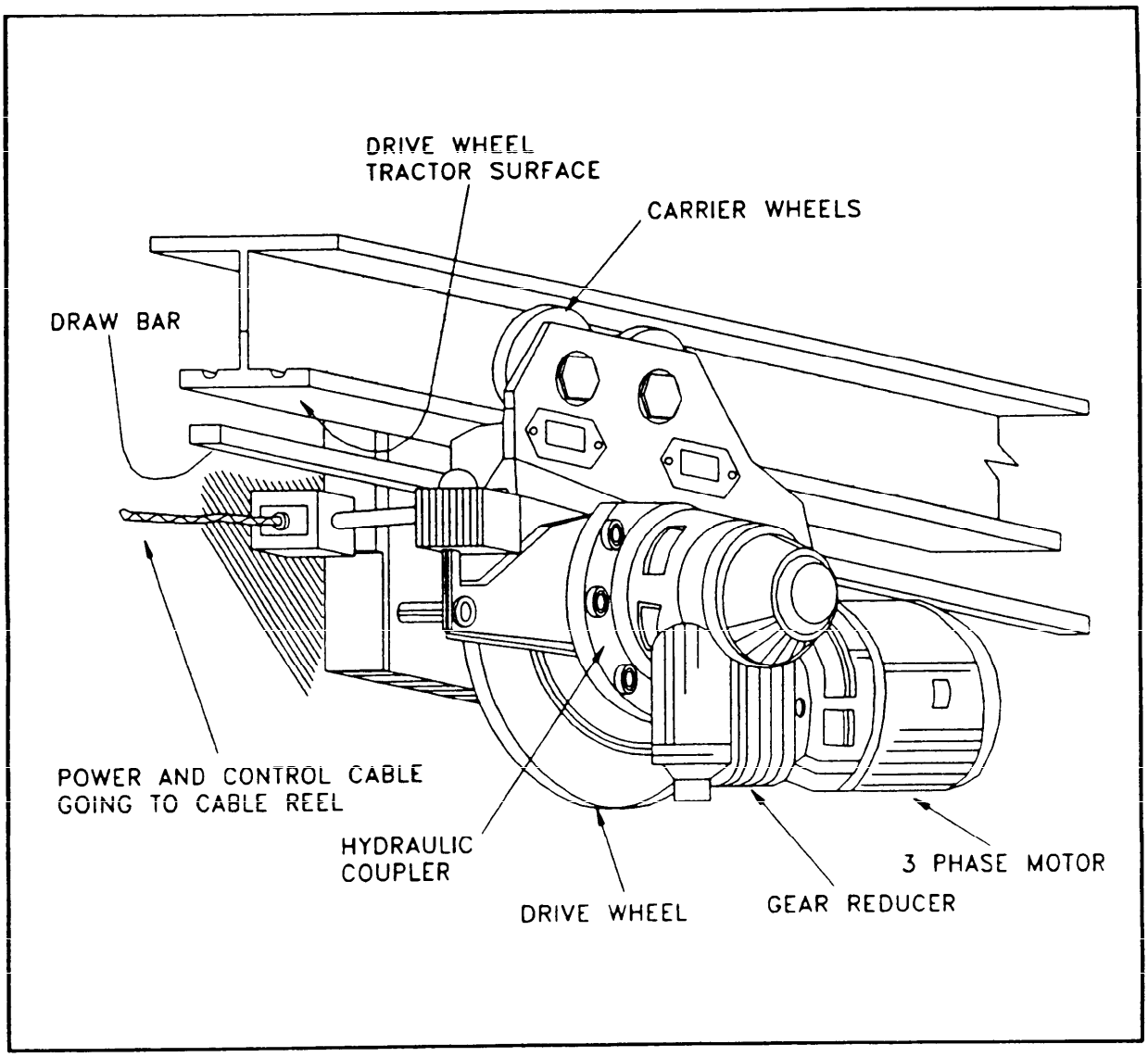

Figure 6
Tractor Attributes

licenses to cover the type which is normally procured to meet

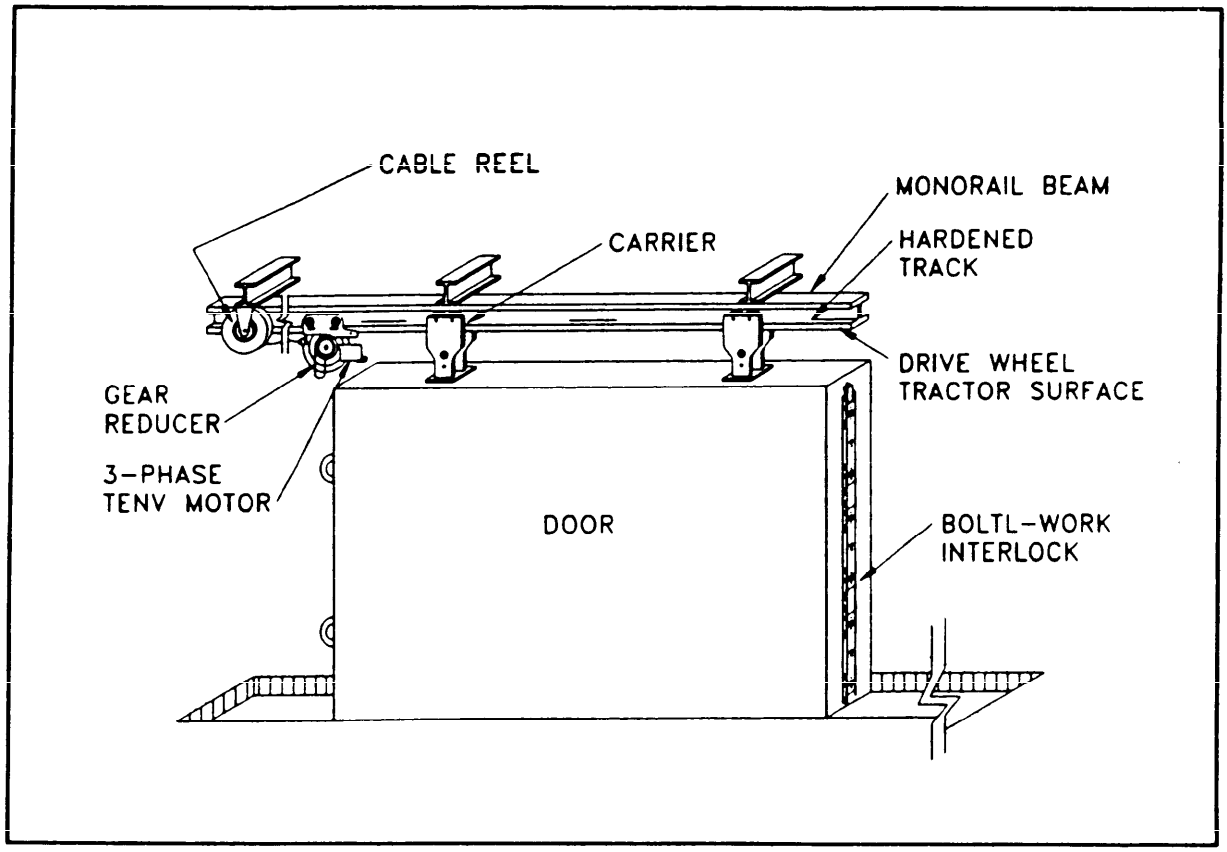

Figure 7
Secure Magazine Door Drive System Components

e) Select tractors that have at least four carrier wheels that run along the top flange of a monorail track.

f) Select tractors that have sufficient power to open and close a magazine door for 10 years while exposed to ANSI MH 27.1, Class C service conditions.

g) DO NOT USE exposed drive chains and drive belts to directly or indirectly transmit mechanical shaft work to tractor drive wheels.

h) Select tractors that use the underside of a monorail track as the friction surface for their drive wheels.

i) Protect tractors from exposure to outdoor conditions.

j) Specify that tractors be made with materials and coatings that will slow degradation occurring as a result of salt spray, moisture, heat, and wind blown sand.

k) Shelter all rubber and plastic drive wheels from ultraviolet radiation or select drive wheels that are made from materials that will resist the effects of prolonged exposure to ultraviolet radiation.

l) Equip each door with one tractor.

m) Select tractors that use hard rubber or plastic drive wheels to propel the door system.

n) Do not use tractors to support magazine doors.

5.3.1.1 Tractor Motors. Select motors based on calculations that take mechanical losses resulting from inefficiencies of power transmission into account. Select tractor motors that have:

a) stainless steel drive shafts,

b) double sealed ball bearings,

c) high pressure wash down integrity,

d) thermal overload protection designed in accordance with Article 430-32 of the NFPA-70 National Electric Code (i.e., National Electrical Manufacturers Association (NEMA) B style torque characteristics),

e) NEMA Class F insulation,

f) Class C service ratings as defined in ANSI MH 27.1,

g) the ability to accelerate the mass of the tractor, magazine door, carriers, and locking system to a speed of 15 feet per minute in no more than 3 seconds without overloading,

h) the ability to operate from 208/230 or 460 VAC three-phase power supplied by a Pulse Width Modulated (PWM) variable frequency drive,

i) a continuous duty rating,

j) protection against harsh outdoor environments.

5.3.1.2 Gear Reduction. Select tractors that have gear reduction units comprised of spur and beveled gears arranged in a sealed housings. In addition, assure that gear reduction units are:

a) provided with an oil bath or are splash lubricated;

b) manufactured from materials of adequate strength, toughness, and surface durability to meet class C service requirements as defined in ANSI MH 27.1;

c) furnished with input and output shafts made of American Iron and Steel Institute (AISI), 304 or 316 stainless steel;

d) furnished with input and output shafts sized to withstand stress reversals imposed on them as a result of loads changing direction;

e) furnished with bearing mounts and bearings and constructed to withstand radial and thrust loads imposed on them during 10 years of class C service as defined in ANSI MH 27.1;

f) designed to mate with AC drive motor shafts and hydraulically coupled tractor drive wheels;

g) double sealed to prevent loss of lubricating fluid.

5.3.1.3 Brake. A mechanical brake is required. Ensure that brakes engage whenever an operator is not depressing the open or close pushbutton switches housed in the control station supplied for each door system.

5.3.1.4 Disk Brakes. If disk brakes that operate outside of motor housings are selected make sure that they are equipped with springs or hydraulic means that will store enough energy to force friction surfaces against the disk; this will occur when power is not supplied to a solenoid that overpowers stored energy to disengage brakes.

5.3.1.5 Self-Braking Motors. Self-braking motors that employ conical rotors and stators to create an axial magnetic field may be used instead of more conventional disk brakes, as discussed previously. At rest, such a motor is braked by spring pressure. When energized, an axial force acts on the motor, induced by its own magnetic field. This force moves the motor rotor subsystem along its axis and disengages a disk brake by overpowering an axial rotor return spring.

5.3.1.6 Dynamic and Regenerative Braking Options. Dynamic AC or regenerative braking may be incorporated into the PWM control systems to assist mechanical brakes in decelerating the mass of magazine doors traveling at or below rated speed along a monorail; do not use this type of brake as the sole means of stopping a door but to assist internal or external mechanical AC motor brakes. Before selecting dynamic or regenerative braking options, ensure compatibility with, or that the option be part of, the PWM AC drive system. If a regenerative or dynamic braking option is selected, supply explanatory circuit schematics and instructions on how to set up AC PWM drive and electrical equipment settings to control system attributes.

5.3.2 Drive System Control

5.3.2.1 Variable Speed Motor Controllers. Adjustable frequency PWM AC drives must be used to run AC tractor motors. For a desired drive output, power single-phase supply voltage will require drives to be derated. This will enable the PWM drive to withstand the increased input current needed to generate the same output power as three-phase input drives do. Some suppliers recommend use of certain three-phase drives with single-phase power or manufacture drives expressly designed to run from single-phase power. Unless a manufacturer recommends a drive be powered from a single-phase source, it may not be used for this purpose. In addition, ensure that PWM drives:

a) have a supply voltage trip that is activated when input voltage varies by more than 10 percent of nominal;

b) run from single- or three-phase 208/230 AC power;

c) output a three-phase, sine weighted, PWM, 208/230 VAC peak output wave form at 50/60 hertz;

d) are equipped with output over-current protection that will discontinue output if the current exceeds more than 150 percent of the output nameplate rating, when operating at a frequency over 25 hertz;

e) regulate rotational acceleration or deceleration of output tractor motor shafts by varying rate of change of output frequency;

f) have programmable settings that allow a range of at least 0.1 to 30.0 seconds for drive output frequency to increase or decrease to a set magnitude;

g) have at least 90 percent efficient power conversion ratings;

h) are properly derated when used at elevations exceeding 3,000 feet;

i) can maintain maximum output frequencies of 50 and 60 hertz in Europe and the United States, respectively;

j) are factory set with, or adjustable to, a maximum frequency of 50 or 60 hertz;

k) will maintain defined maximum frequency within plus or minus 0.5 percent;

l) have input control terminals - these terminals must allow a remote pushbutton station to disengage mechanical drive brakes and start and stop the magazine door in two directions;

m) display an indicator of the most recent fault condition - such a display is not required at pushbutton stations or any other remote location; instead, such indicators need only be displayed inside of drive enclosures; and

n) do not use variable voltage to change motor speed.

5.3.2.2 Drive Enclosure. Some PWM drives come equipped with outdoor ratings. If a drive comes factory equipped with a NEMA 3R, 4, or 4X rating and fulfills all other drive requirements, it may be preferable to choose it over an alternative that must be mounted in an enclosure subsequent to its manufacture. Drives that come with outdoor NEMA ratings are usually engineered with cooling fins outside of drive enclosures and should adequately dissipate generated thermal energy for a given set of ambient temperature extremes. It is less expensive to purchase a drive with an outdoor NEMA rated enclosure than it is to mount a drive in an outdoor enclosure. Mounting drives in aftermarket enclosures may cause thermal cooling problems and create a requirement for coolers, fans, or heat exchangers that may sacrifice the environmental integrity of the outdoor enclosure. If a drive is mounted in a NEMA 3R, 4, or 4X enclosure, cutting holes in the enclosure and mounting cooling equipment may ruin the outdoor enclosure integrity.

5.3.2.3 Control Circuits. Furnish doors with operator stations, Intrusion Detection Systems (IDS), and balanced magnetic alarm switches that are designed according to National Electric Code (NEC) Article 725.

5.3.2.4 Power Circuits. Design tractor motors, tractor brakes, and programmable motor controller circuits according to National Electric Code (NEC) Article 430.

5.3.2.5 Door Position Sensor General Requirements. All position sensors should be mounted outside of magazines and should have outdoor NEMA 3R, 4, or 4X rated enclosures. Position sensors can be magnetic, photoelectric, or lever actuated. Select position sensors that have at least one normally open and one normally closed set of contacts rated for 10 continuous amperes at 600 volts. If an electrical design requires more sets of contacts, the designer should specify the appropriate number of sensor contacts. Design all sensor actuators to adjust plus or minus 2 inches in a plane parallel to the motion of the door. This range of adjustment is a requirement regardless of the type or function of the sensor.

5.3.2.6 Full Travel Position Sensors. Due to deployment of PWM programmable drives, full travel limit sensors should be mounted to signal programmable drives to decelerate doors into final resting positions. Mount these sensors where they will be tripped 6 to 18 inches prior to a magazine door's full open and closed positions.

5.3.2.7 Using Sensors to Change Midspan Door Speed. Changing a door's speed might be desirable in the midspan of its travel. This might be done to decrease a door's speed as it closes, or to increase its speed while it opens: for example, a door might be slowed while it moves toward a closed position to prevent the door from hitting personnel or cargo entering or exiting the magazine.

5.3.2.8 HSIL Position Sensor. Install position sensors that indicate when the HSIL is locked on each high security magazine door equipped with the HSIL. Set up each sensor so that it causes a red light on the pushbutton control station to be illuminated when the HSIL is locked (see Figure 8). This can be done by reading the positions of bolt-work interlock assemblies. Locate position sensors for this purpose on magazine doors. Mount sensors near the top of magazine doors. Select sensors, design sensor brackets, and install them both so that each sensor is actuated by the uppermost slide of a bolt-work interlock assembly. Make sure that these position sensors are compatible with drive and control system components. Install 3/8-inch liquid tight conduit from position sensors to electrical junction boxes on each tractor. Route two appropriately sized stranded conductors in the conduit. Connect conductors to position sensors as recommended by manufacturers. Connect these conductors to conductors that are supplied in the multiconductor tractor control and power cables that are fed on and off of a reel as the doors are opened and closed. Ensure that all conductors that move with doors meet in the same junction box.

5.3.2.9 Operator Station. Locate operator stations to control the motion of externally locked magazine doors outside of magazines; select outdoor pushbutton stations that are NEMA 3R, 4, or 4X rated enclosures. Locate operator stations to control the motion of internally operated doors inside magazines; select explosion proof pushbutton stations (see subparagraph 5.4). Select pushbutton stations that have four factory cutout spaces: use one cutout for a light that signals personnel when the HSIL is locked; use one cutout for a flush-mount deadman style switch that opens the door; use one cutout for a flush-mount deadman style switch that closes the door; and use one cutout for a key switch that can enable or disable the drive system. Design control circuits so that when a pushbutton is not being held down, the drive will not be energized and the primary mechanical drive brake will be engaged. Refer to Figure 8 for a conceptual picture of a magazine door operator station. Design control circuits going to pushbutton stations so that when a pushbutton is being held down the drive brake will not be energized and doors will either be closing or opening. When the HSIL indicator light is on, the door close pushbutton will not close the door. Personnel must place the locking system in an unlocked mode before closure of the door can resume.

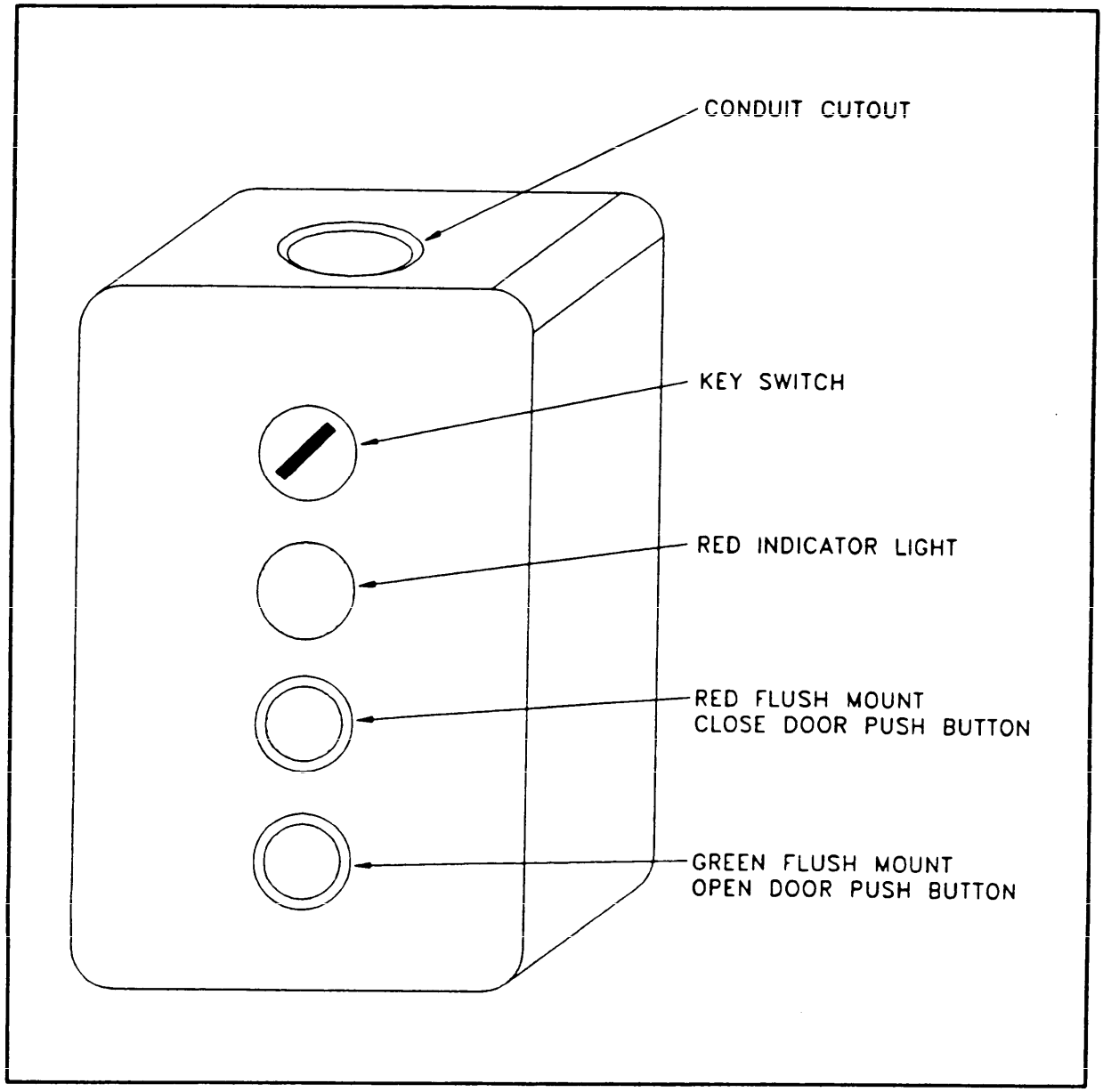

Figure 8
Weather Resistant Magazine Door Drive
System Control Station

5.3.2.10 Time Allowed to Open and Close Magazine Doors. Two minutes are allowed to open each magazine door and 2 minutes are allowed to close each door. A total of 4 minutes is allowed for one complete cycle of the door (i.e., open-close). Select steady-state door speeds that do not exceed 18 feet per minute and are at least 12.5 feet per minute. Choose steady-state door speeds that take acceleration and deceleration rates of doors into account. Program acceleration and deceleration rates into PWM variable frequency drives.

5.4 Explosive Safety Electrical Requirements. Select interior magazine electrical equipment that is approved by Underwriters Laboratory (UL) or Factory Mutual Insurance Corporation for use in hazardous locations as defined in NEC Article 725. Specifically, interior electrical equipment must be rated for use in NEC Class I, Division 2, group D, and Class II, Division 2 group G hazardous locations. If an electrical component is approved for one of these types of locations, it does not necessarily mean it will be safe in the other. Do not specify that open power strips be used to power tractors. Open power strips constitute a possible explosive safety problem as well as an electrical safety hazard for maintenance personnel. Where possible, locate magazine door drive system electrical equipment outside magazines. Equipment mounted outside must be installed in NEMA 3, 4, and 4X enclosures, or enclosures with equivalent industrial ratings.

5.5 Closing and Opening Doors Manually

5.5.1 Manual Disengagement of Brake and Drive Systems. In case of equipment failure or power outage, select drive brakes and motors that can be disengaged. This will enable magazine doors to be moved without the use of the door drive system. Provide each door with a means, that requires one action or movement, to disengage drive brakes and motors. Place equipment intended to disengage drive motors and brakes in positions accessible to personnel standing on the ground in front of the magazine. Post instructions explaining how and when to bypass motors and brakes in plain view. These instructions must be painted on the door or pilaster or alternately displayed on weatherproof stickers or decals. Such instructions may contain illustrations as deemed necessary.

5.5.2 Padeye for Manual Door Operation. Weld a padeye to the opening edge of each magazine door. Design padeyes that allow cable or rope to pull doors open and closed when drive brakes and motors have been disengaged. Take steps that will prevent a cable or rope from placing side loads, that are not parallel to the monorail, on a magazine door while it's being pulled.

5.6 Cable Reels. Control and power circuits must be maintained to mobile drive tractors. An isolated lightning ground must also be provided for each door; the lightning ground is not the same as the equipment ground contained in the cable that powers and controls tractors. Use cable reels to maintain electrical circuits to mobile doors and tractors. Mount lightning

ground and equipment power and control reels at stationary locations. In addition, comply to the following guidelines:

a) Provide a stationary cable reel that will maintain power and control circuits to tractors.

b) Furnish each tractor cable reel with multiconductor, stranded AWG 10-gauge wires. Provide enough conductors to power, control, and ground tractor motors.

c) Provide each door with a stationary lightning ground cable reel to feed a AWG 1/0 lightning ground strap or cable in and out as a door translates from opened to closed.

d) Connect lightning grounds to isolated ground girdles.

e) Select reels that employ precision bearings at axle mounting points.

f) Install cable reels so that their motors are accessible for maintenance and repair.

g) Furnish tractors and doors with reels capable of supplying cable to them for their entire range of motion.

h) Select reels made from corrosion-resistant materials and shelter them from exposure to harsh outdoor conditions.

5.7 Monorail and Related Equipment. Select monorails designed out of one rolled or fabricated section.

5.7.1 Monorail Strength. Select monorails with track that will not deflect more than 1/450 of the span between its supports. Select monorails so that design loads will not induce top flange compressive stresses in excess of 60 percent of the yield strength of the material used. For spans over 16 feet, the ratio of span to top flange width shall not exceed 60:1.

5.7.2 Monorail Hardness. Select T-sections that are hardened to a Brinell Hardness Number (BHN) between 195 and 229 (see Figure 9). Under no circumstances should the entire beam be hardened; severe reduction of the ductility in the upper section of a monorail would compromise its ability to act as a structural member.

5.7.3 Monorail Construction. Select monorails with T-sections that are welded continuously along both sides of the web with full penetration welds. Select monorails with T-sections constructed from ASTM A36 or equivalent structural steel. Ensure that monorails are made as indicated in Figure 9.

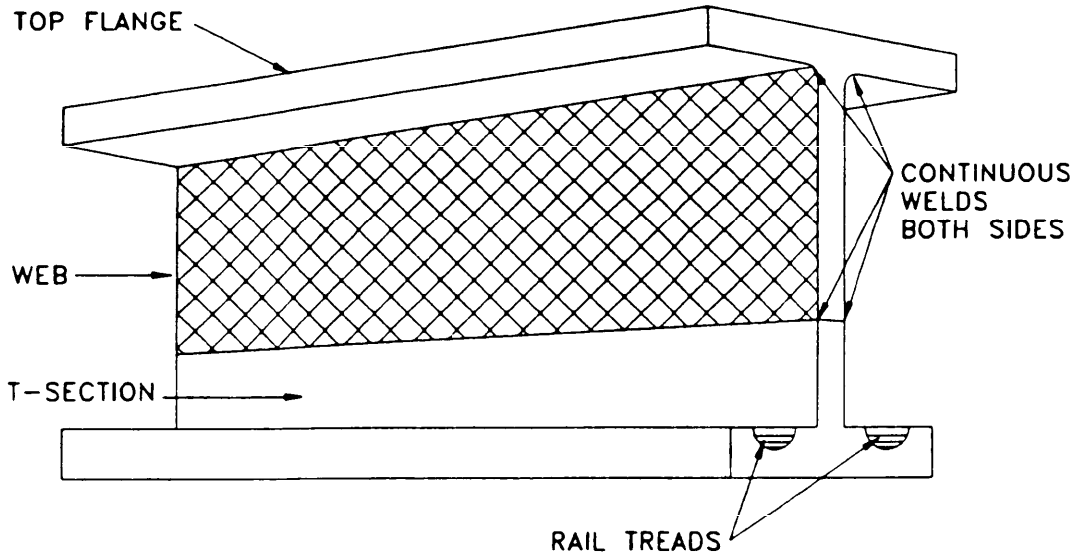

T-SECTION MADE FROM HIGH CARBON MANGANESE STEEL WITH THE FOLLOWING PROPERTIES:

CARBON CONTENT	0.55/0.65
TENSIL STRENGTH	NOMINAL 125,000 PSI
BRINELL HARDNESS	229
MANGANESE	0.80/1.10
PHOSPHOROUS	0.040
SULFER	0.050
SILICON	0.20
MAXIMUM DECARB.	0.020
T-SECTION RAIL WEIGHT(APPROX.)	11.51 LB/FT

Figure 9
Monorail Characteristics

5.7.4 Hardness of Monorail Rail Treads. Select monorails that have a rail tread hardness of at least 195 BHN and not more than 229 BHN.

5.7.5 Carriers. Select carriers that conform to requirements in ANSI MH 27.1. Provide each magazine door with at least two carriers that are independent from tractors. Select carriers with at least four wheels. The purpose of these carriers is to support the magazine door and to allow each door to translate along a monorail when propelled by a tractor. Select carriers with swiveling type yokes. The sum of the load ratings of the carriers that support each door must be at least as large as the weight of the magazine door and all hardware mounted on the door. Manufacturers provide a stamped maximum load rating on all carriers.

5.7.5.1 Carrier Wheels. Select carriers with wheels made from drop forged or rolled steel that have heat-treated treads and flanges; treads should have a minimum hardness of 425 BHN. Wheels must have double row precision bearings manufactured to withstand radial and thrust design loads. Ensure that wheel bearings are properly lubricated.

5.7.5.2 Carrier Lubrication. Select carrier wheels with grease fittings and seals. Grease fittings make it possible to lubricate the wheel bearings without disassembly. Seals must retain grease in the bearings. Select carriers that have lubrication fittings that are readily accessible to maintenance personnel. Supply carriers with standard Society of Automotive Engineers (SAE) grease fittings, serviceable with standard grease guns. Select carrier wheel bearings that are made from materials that will not be harmed by general purpose soap-based SAE automotive type grease.

5.7.5.3 Derating Carrier Components. Select bearings that will provide a B-10 life under expected loading conditions for 5,000 hours of operation. Select carriers that have a rated capacity large enough to ensure safe operation during a 10-year life of class C duty as defined in ANSI MH 27.1.

5.8 Physical Security Hardware

5.8.1 Externally Operated Magazine Doors. This handbook refers to door locks that are operated from outside the magazine as externally operated. Furnish each multi-bay box magazine with at least one externally operated door.

5.8.1.1 HSIL Modular Box. Furnish each externally operated magazine door with the HSIL. Mount the HSIL in its modular box. Fabricate HSIL modular boxes according to Naval Facilities Engineering Service Center (NFESC), Drawings 91-37-1F and 91-37-2F. Install HSIL modular boxes in doors before they are filled with lightweight fiber-reinforced concrete. The HSIL modular box is configured to allow access to the HSIL from outside of a secured door. Four tubular ports, visible from the outside of the magazine, allow access to a shutter pivot shaft, a hexagonal actuator socket, two key-ways, a bolt-work interlock subsystem, and a hexagonal actuator socket. Figure 10 shows the

concept of the modular box used to house the HSIL and Figure 11 shows the unlocking procedure for a dual key controlled HSIL. Reverse the order of the steps and the direction of all key and wrench rotations to lock the HSIL: for example, the first step to locking the HSIL is step five, Figure 12 shows the securing procedure for the HSIL. Figures 11 and 12 show HSILs that are operated with two unique keys, each supplied with a protective key-guide. HSILs controlled by a single key are not approved for use on high security magazine door systems that protect special weapons.

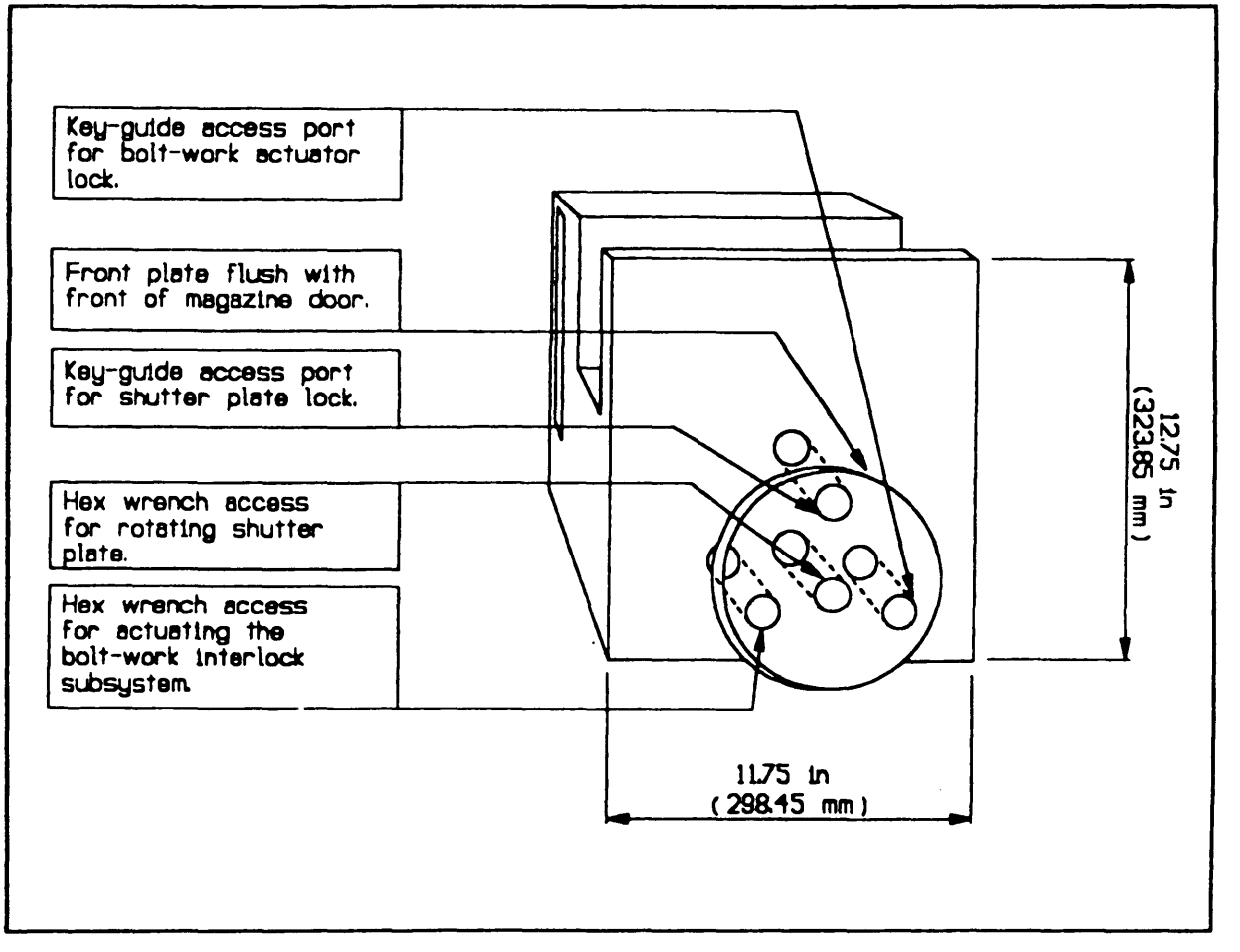

Figure 10
HSIL Modular Box

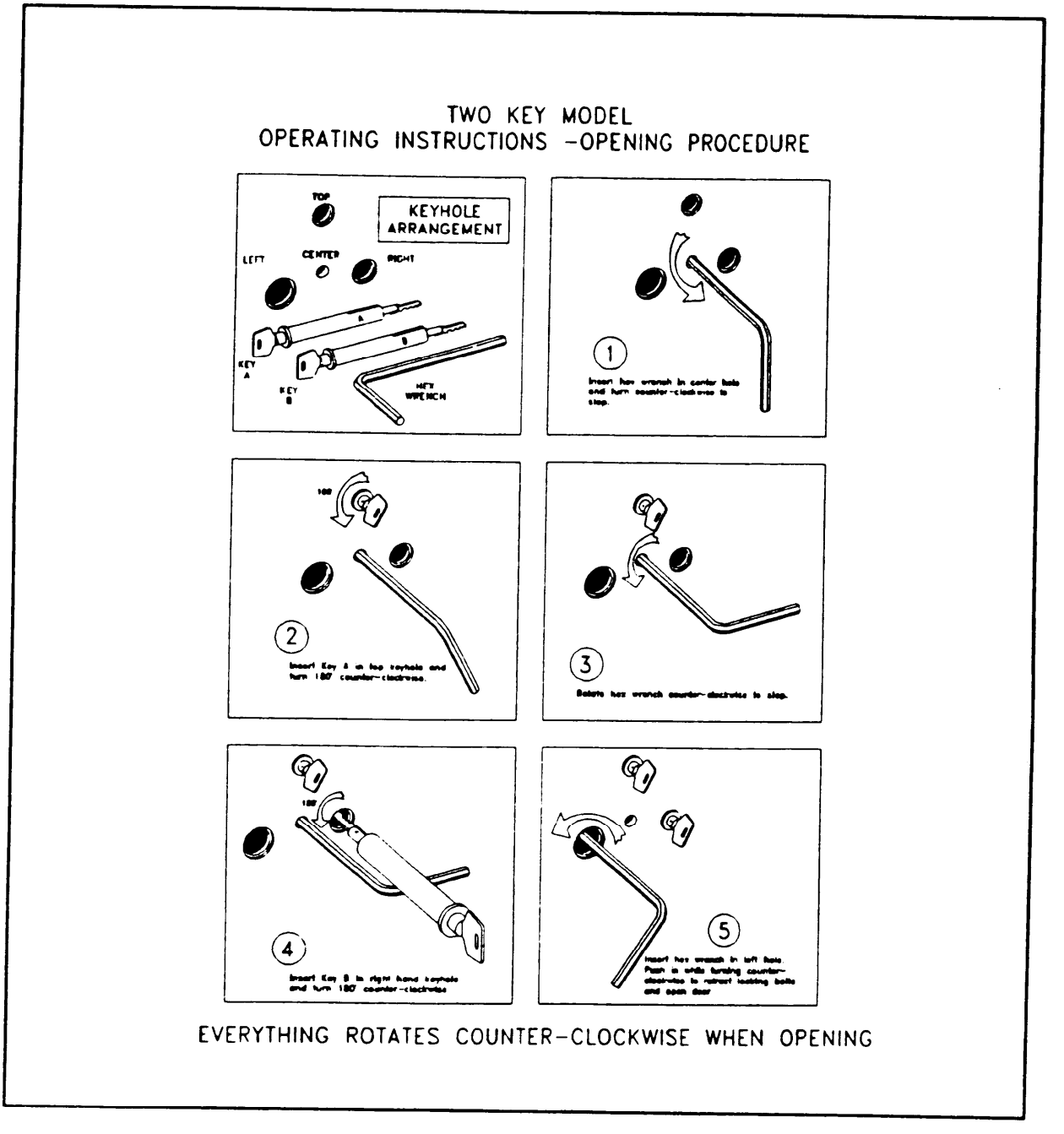

Figure 11
Two Key HSIL Opening Procedure

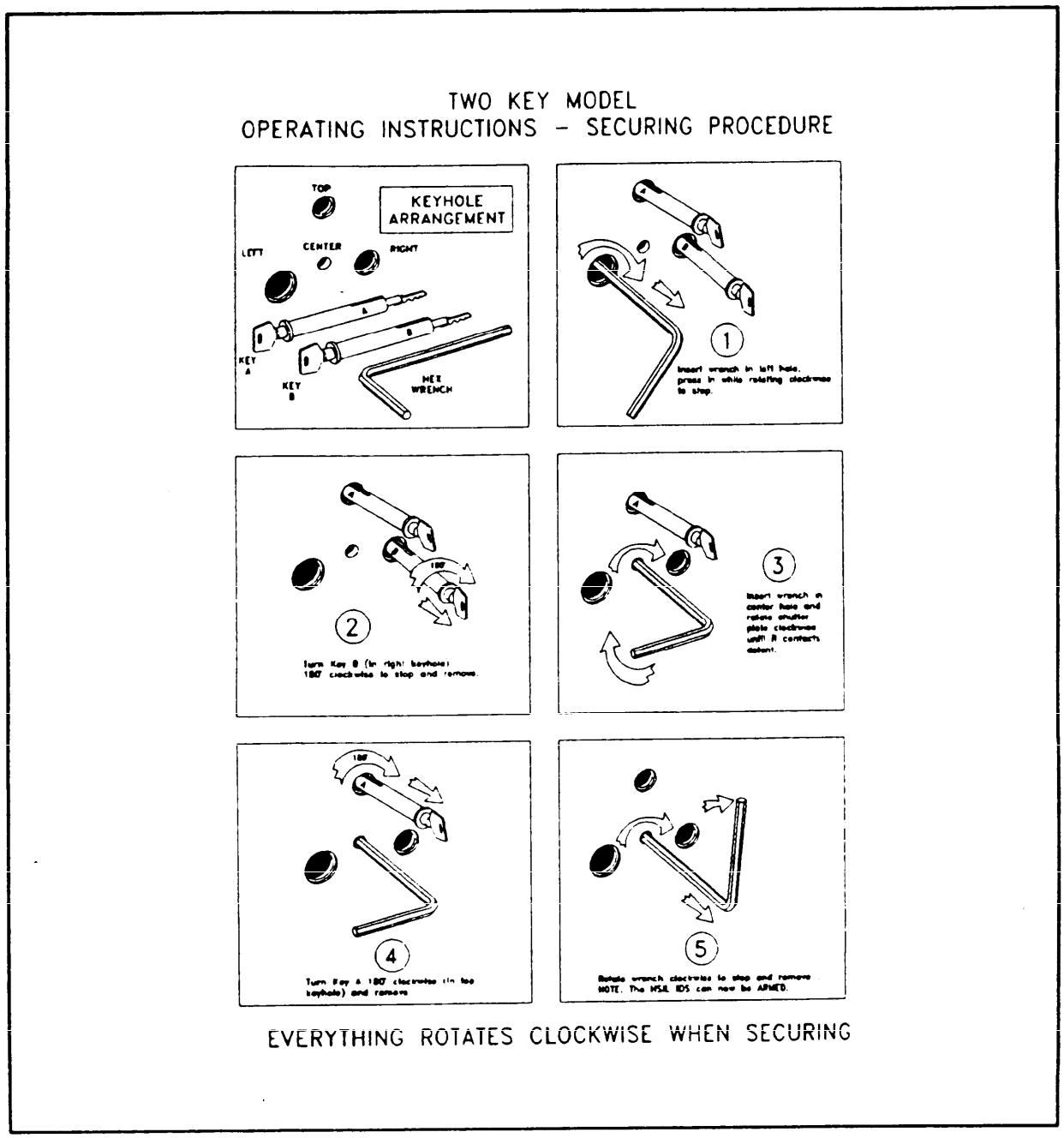

Figure 12
Two Key HSIL Securing Procedure

5.8.1.2 Protective Key-Guide. Each HSIL coupled with its modular box is designed to work with a protective key-guide. The key-guide concept is illustrated in Figure 13. Furnish each HSIL with a protective key-guide. Protective key-guides ensure that human operators cannot turn the HSIL key before it is completely inserted into a key-way, or misalign a key while it is being inserted into the HSIL key-way. The protective key-guide also ensures that HSIL keys and their long extensions are not bent when not in service. When the protective key-guide is not in use the key retracts into a cylindrical sleeve similar to the way an ink cartridge retracts into a ball point pen's housing when it is not in use. Protective key-guides should be made according to NFESC Drawing 89-9-11F.

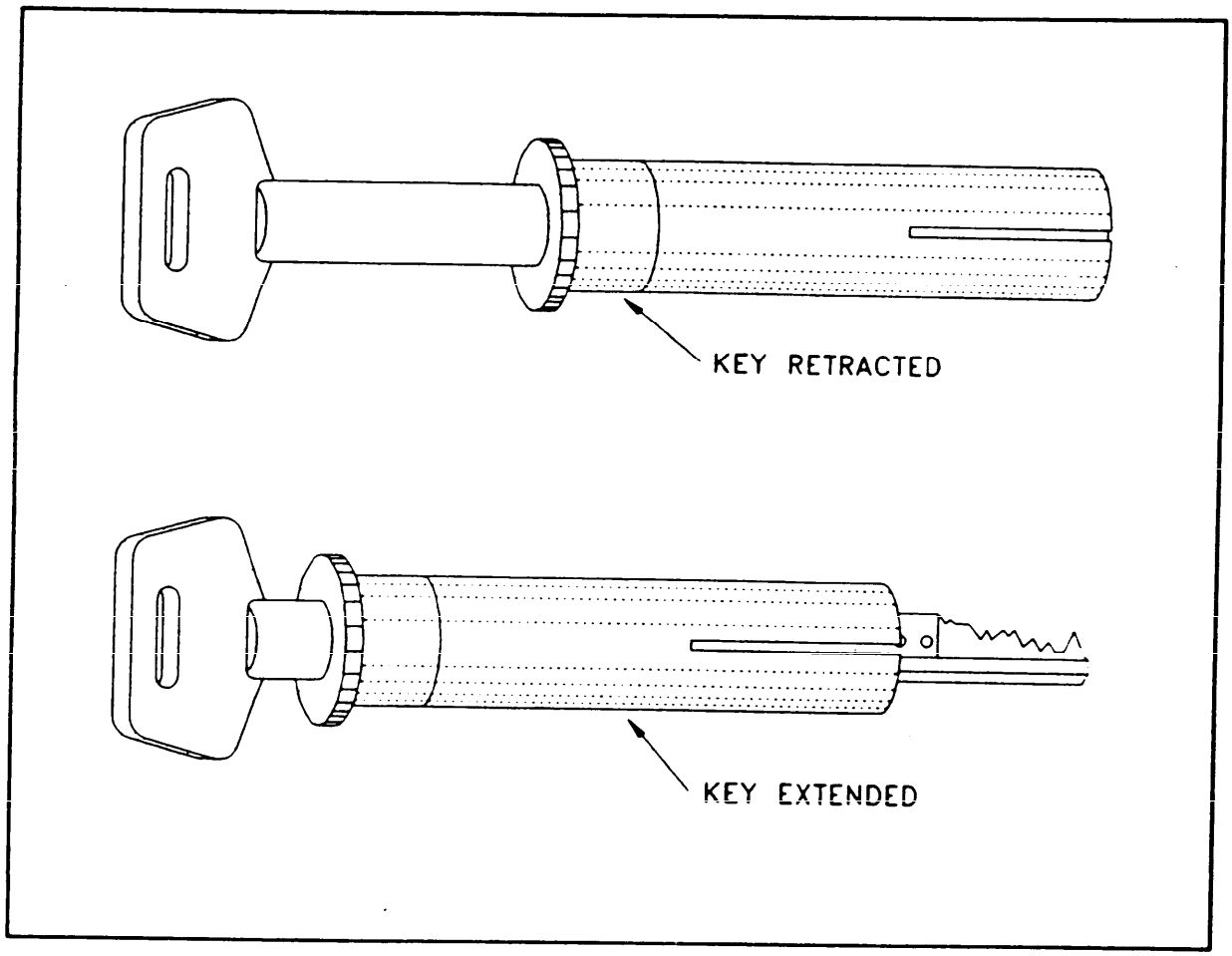

Figure 13
Protective Key-Guide

5.8.1.3 HSIL MIL-HDBK-1013/6. The HSIL Military Handbook, MIL-HDBK-1013/6, High Security Internal Lock Description, Operation, and Maintenance, features the list of the drawings needed to fabricate the HSIL, and operational and maintenance instructions for the HSIL. Do not depend solely on this handbook (i.e., MIL-HDBK-1013/11) for information regarding the HSIL. The HSIL is complex enough that you should refer to MIL-HDBK-1013/6 (in publication) for detailed operational and maintenance information. The HSIL will be government furnished and contractor or government installed. Contact NFESC, Port Hueneme, California, Code 66, to determine the cost and availability of HSIL units.

5.8.2 Internally Operated Magazine Doors. High security magazine doors may be configured so that they cannot be opened from the outside. Magazines that have more than one door leading to a common area are candidates for internally operated locks; ensure that there is at least one externally operated door per common magazine storage area.

5.8.2.1 Internally Operated Lock (IOL). The IOL, like the HSIL, must be mounted in its own unique modular box. Figure 14 shows that the IOL is made of an inner box that contains the lock and an outer modular box that the lock mounts in. The outer modular box must be mounted in a high security magazine door. Install the outer modular box before filling the magazine door with concrete. NFESC Drawings 91-21-1F, 91-26-1F, 91-26-2F, 91-26-3F, 91-26-4F give design and installation details for the IOL subsystem. IOLs will be fabricated by the government and installed by government or contractor personnel. Contact the NFESC, Port Hueneme, California, for IOL cost and availability data. IOLs are not available through the Navy supply system. Unlike the HSIL, the IOL may only be locked or unlocked from inside of a magazine and can only be used on a multibay box magazine. Figure 15 shows the IOL in a locked mode. Figure 16 shows the operating steps to unlock internally operated doors furnished with the IOL. Reverse the procedure to lock the IOL.

5.8.3 Bolt-Work Interlock Subsystem for High Security Magazine Doors. A bolt-work interlock subsystem has been developed for use with the HSIL and IOL. Externally and internally operated magazine door locks use the same bolt-work interlock. Locate the bolt-work interlock subsystem on the locking edge of magazine doors as indicated on NFESC Drawings 92-4-1F and 92-4-2F; the position of the bolt-work interlock subsystem for externally operated high security locks will be different than for internally operated high security locks. The drive link pickup point for externally operated locks will be different than for internally operated locks. Make bolt-work interlock subsystems according to NFESC Drawings 91-36-1F and 91-36-2F. Figure 17 shows isometric views of the components that make up a bolt-work interlock.

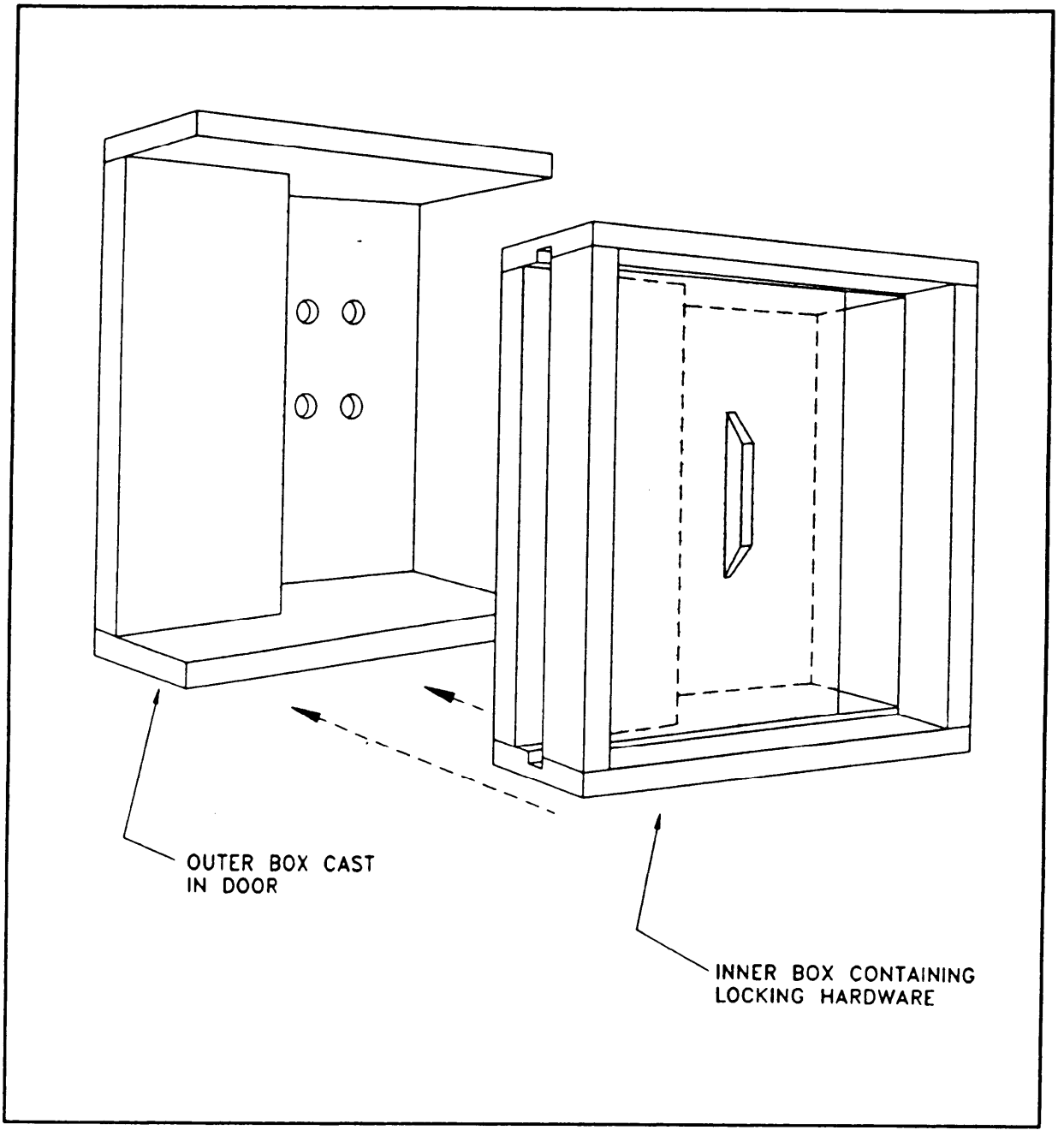

Figure 14
Internally Operated Lock

4.4.1.1 Unbonded Concrete Overlays. Unbonded concrete overlays are

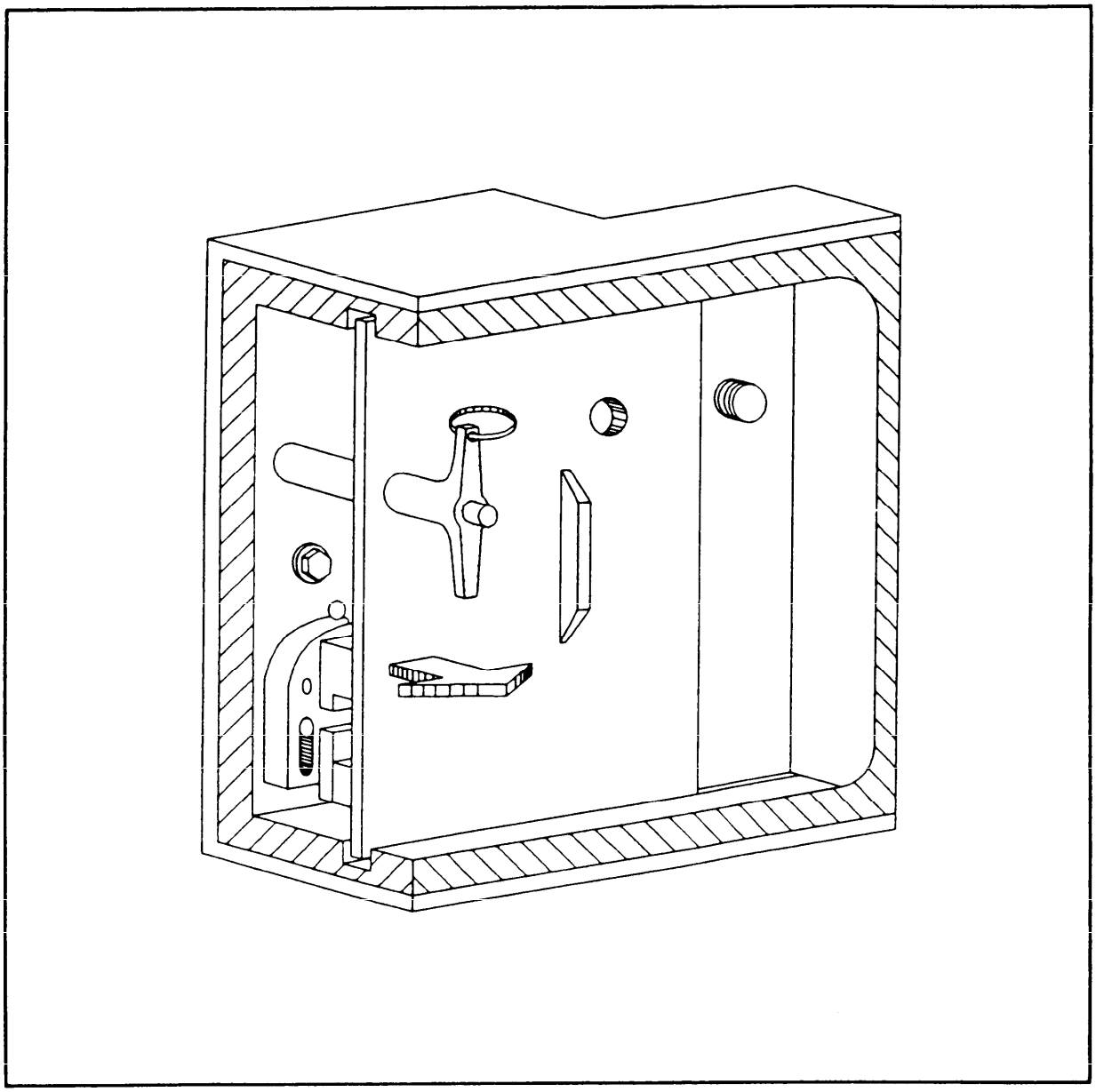

Figure 15
Internally Operated Lock (IOL) Shown in Locked Mode

full-depth repair include blowups, corner breaks, D cracking, spalling,

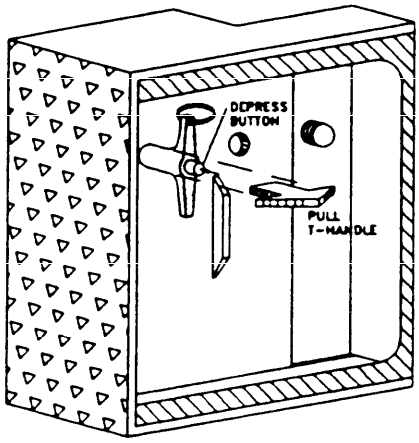

STEP 1
Depress button in the middle of the T-handled lock bolt and pull the lock bolt out of the IOL.

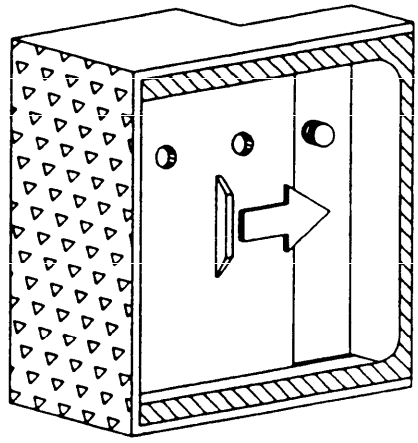

STEP 2
Grab door handle and slide cover open(i.e. away from locking edge of the magazine door).

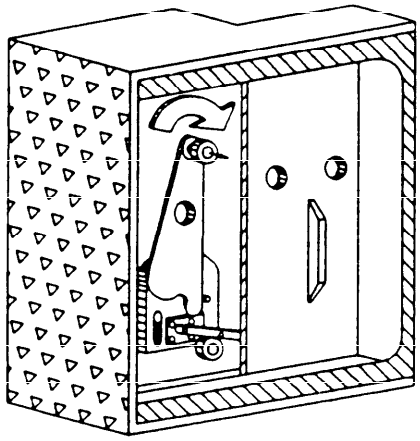

STEP 3
Pull the knob toward yourself(i.e. away from the magazine door)and rotate the pivot plate approximately 27.5 degrees clockwise until it hits its physical stop. Release spring loaded knob.
NOTE:The pivot plate is shown in its unlocked position after it has been rotated.

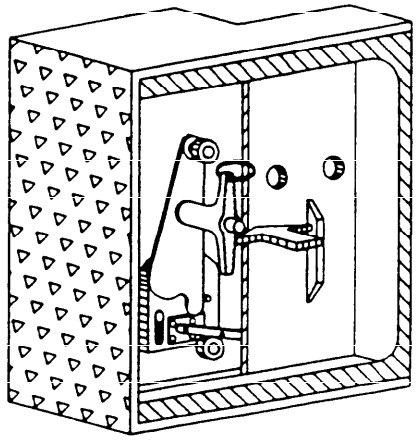

Step 4
Place T-handled lock bolt back in hole to hold bolt-work in unlocked position.

Figure 16
IOL Unlock Procedure

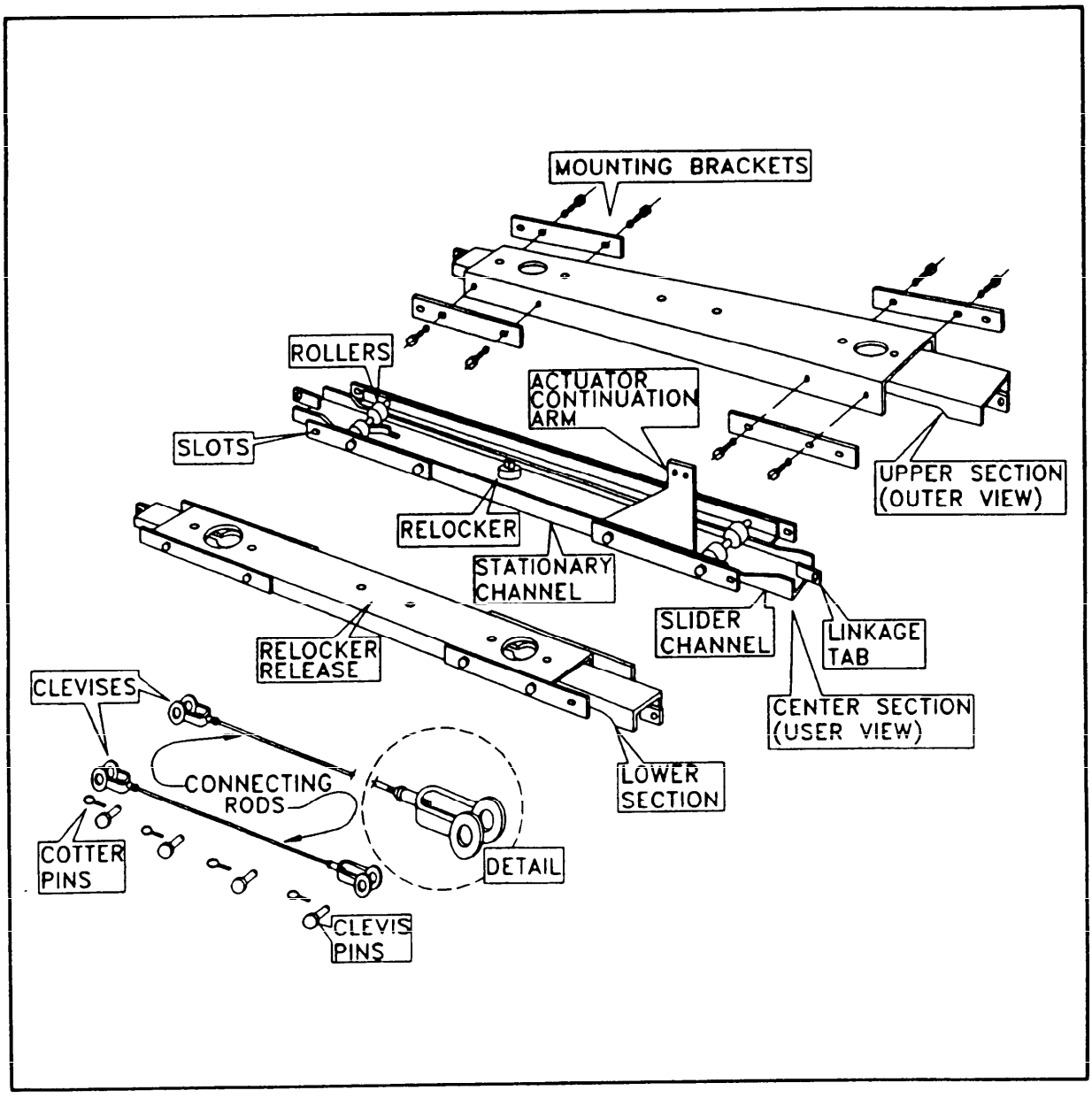

Figure 17
Bolt-Work Interlock Components

5.8.3.1 Protecting Bolt-Work Interlock Subsystem from Damage. The bolt-work interlock must be aligned properly with the mushroom bolts mounted on the pilaster. Properly align the bolt-work interlock with its stationary mushroom bolts. Position monorail vertical and horizontal adjustments as near as possible to the middle of their ranges before mounting the bolt-work interlock. Adjust the carrier link plate so that the doors hang vertically prior to mounting the bolt-work interlock. Mount the bolt-work interlock so that its encasement channel is vertical and parallel to the rear door surface. Refer to Section 7 for information regarding the types of adjustability that must be provided for each door. Section 7 uses true horizontal and vertical reference planes to ensure that doors hang properly. Follow all instructions in Section 7. Proper adjustment of the door before installation of the locking system is critical. If the door is not properly aligned the locking system could be damaged.

After the door has been aligned and before mounting the bolt-work interlock, it should be run back and forth along the monorail at least 100 times. At the end of 100 cycles, inspect the door to see if it still hangs vertically. Ensure that there is equal clearance on both sides of the door with respect to top and bottom rebound restraint substructures, and ensure that monorails are level. Adjust the door if necessary and cycle it 100 additional times; repeat the procedure until the door maintains proper position with respect to true horizontal and vertical references planes defined in Section 7. When you are absolutely sure that a magazine door is hanging properly install the bolt-work interlock.

5.8.3.2 Door Indexer. Install door index receptacles on pilasters below the mushroom bolts. Align the index receptacle with the index post mounted on the locking edge of the door. Mount a door index post, a half cylindrical steel part, at the bottom of the bolt-work interlock subsystem located on the locking edge of the door. Properly align it with the index receptacle. Figure 18 is a conceptual isometric drawing of the indexer. Its conceptual relationship to the door system is depicted in Figure 19. For door indexer design details refer to NFESC Drawing 91-44-2F. Do not use the indexer subsystem to compensate for large errors in bolt-work interlock alignment. The indexer will align the door as it closes making up for minor misalignment of the bolt-work interlock. Ensure that this feature is provided; it will compensate for misalignment occurring subsequent to initial setup to avoid damaging the bolt-work interlock. If the indexer starts compensating for misalignment, the door should be adjusted so that it maintains proper alignment, thus avoiding use of the indexer that is intended as a backup means of ensuring bolt-work interlock alignment. In short, the indexer is a device that is intended to prevent in-service failure that could cause a lock out, damage to the bolt-work interlock, or prevent the high security magazine doors from being locked. It is only an interim fix for aligning the moving bolt-work interlock and stationary mushroom bolts mounted in the pilaster.

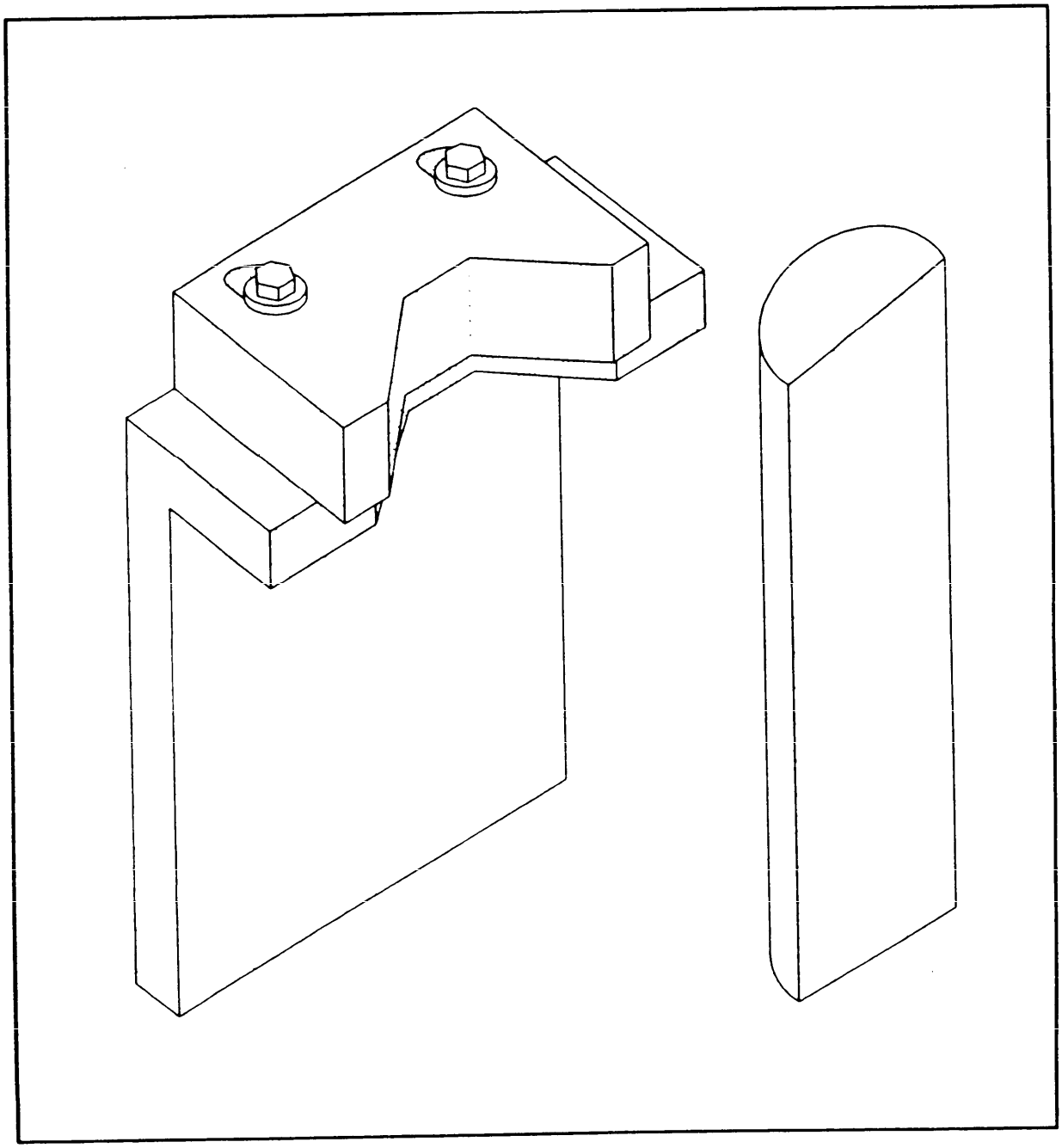

Figure 18
Door Indexer

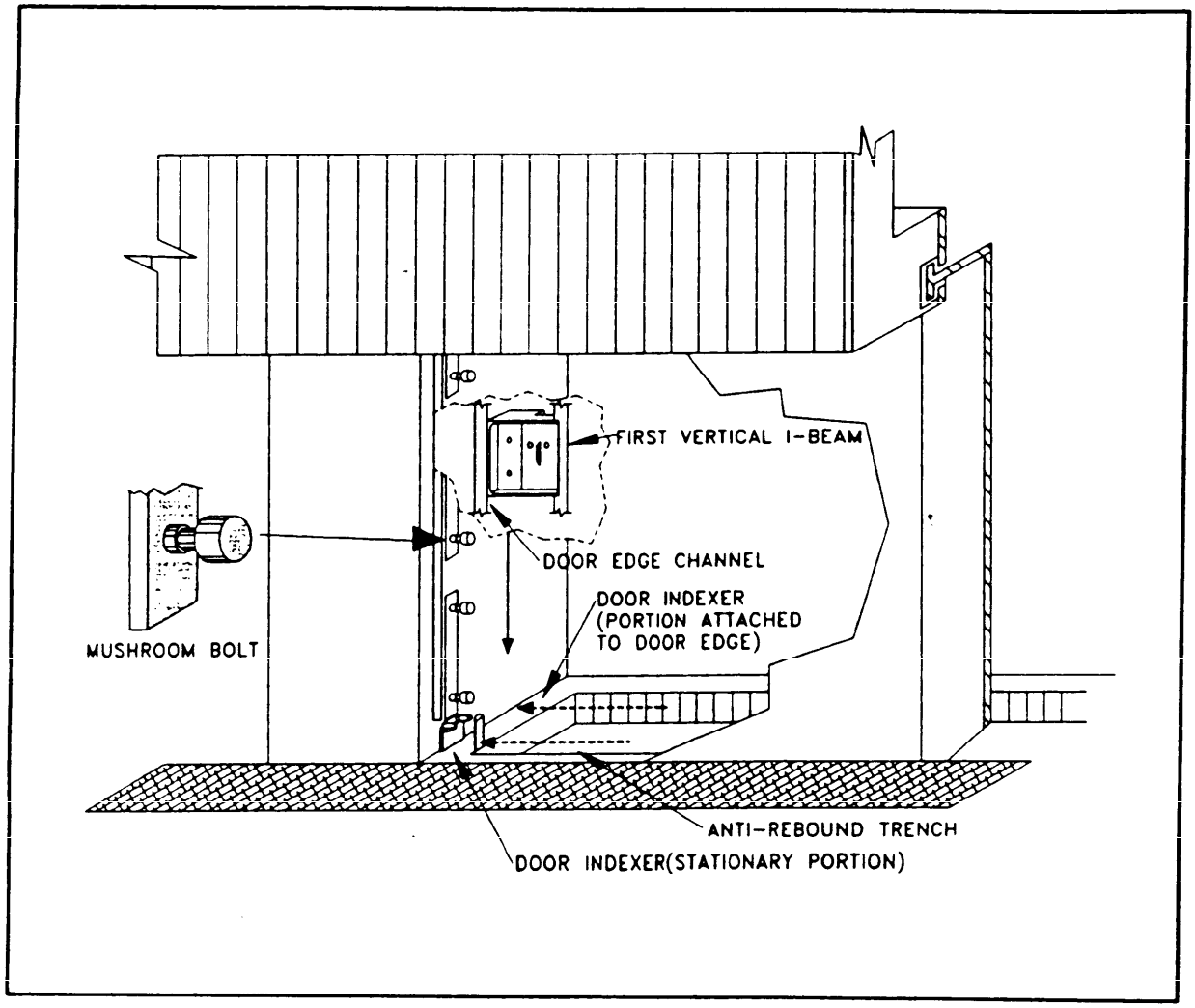

Figure 19
Internally Operated Door as Seen From Inside a Magazine

5.8.3.3 Door Stop. The door stop prevents a magazine door from reaching a fully closed position when the bolt-work interlock is in a locked mode; it will complement the electrical cutout feature discussed in Section 5, subparagraph 5.3.2.9. The door stop is part of the bolt-work interlock subsystem; design details for the door stop are furnished on NFESC Drawings 91-36-1F and 91-44-1F. If a bolt-work interlock is in a locked mode and the electrical cutout malfunctions, or if the door is being manually closed, the mechanical door stop will prevent the door from completely closing, thus preventing damage to the bolt-work interlock or mushroom bolts.

without mixing the two materials

5.8.4 Plating Physical Security Hardware with Yellow Dichromate. Physical security hardware mounted on high security magazine doors will be exposed to corrosive outdoor environments. To prevent security hardware from corroding make sure that all steel security hardware, except for parts made of ASTM 316 stainless steel, are plated with yellow dichromate. Yellow dichromate plating must be done according to ASTM B177, Practice for Chromium Electro-Plating on Steel for Engineering Use.

5.9 Protective Pilaster. Box magazines have doors with vertical I-beams. Rebound restraint is built into a high security box magazine door at both the top and bottom of each door. The restraint is built into each high security magazine door to counter explosive threats. Protective pilasters are not intended to restrain high security box magazine doors from rebounding after an explosive charge has been set off in front of a magazine. However, pilasters can serve to strengthen magazine headwalls by transmitting loads created by explosions. Pilasters also increase the forced entry resistance of a magazine door.

5.9.1 Relationship of Pilasters to Doors. Pilasters provide security against sophisticated forced entry methods. Pilasters must prevent access to a bolt-work interlock. Construct an L-shaped pilaster on the locking side of each door. Pilasters must have an elevation as high or higher than the magazine doors. The L-shaped cross section must be 6.0 inches deep in the direction parallel to the door front (see NFESC Drawings 92-4-2F and 92-4-1F). When a bolt-work interlock subsystem is installed and the locking edge of a door is recessed in the L-shaped pilaster, in a locked mode, the pilaster must overlap the door front by 3.0 inches.

5.10 Maximum Magazine Door Beam Spacing. Maintain a 15-inch on-center space between adjacent I-beams. This distance must always be less than or equal to 15 inches. Ensure that there is enough space between the locking door edge and the first vertical I-beam for proper placement of modular HSIL and IOL boxes (see Figure 3). If beam spacing is greater than 15 inches on center, the door will be vulnerable to forced entry attacks.

5.11 Electronic Security

5.11.1 Intrusion Detection System. Furnish each magazine door system with an integrated Intrusion Detection System (IDS). The system must be isolated from all other magazine electrical equipment. All IDS wiring and components, located inside magazines, must be rated for hazardous explosive environments as required by NAVSEA OP-5 and paragraph 5.4. Ensure that alarm system input and output power and signal wiring is tamper proof. Furnish externally operated doors with two IDS sensors: a balanced magnetic switch and an HSIL tamper switch. Ensure that a balanced magnetic switch is integrated into both internally and externally operated high security magazine doors. High security magazine doors require specific physical placement of BMS and IDS switches. See NFESC drawings 92-4-1F and 92-4-2F for data that indicates the required locations of HSIL tamper detection switches and door

BMSs. For more specific details on BMS and HSIL tamper detection switch assemblies, please refer to NFESC drawings 91-43-1F and 91-44-1F. With the exception of the placement of BMSs and HSIL tamper switches, there are not any special IDS requirements for high security magazine doors. All IDSs for Navy magazines must comply to applicable OPNAV design criteria. IDSs for Navy magazines that store conventional arms, ammunition, and explosives must comply to applicable criteria in Physical Security Instruction for Arms, Ammunition, and Explosives, OPNAVINST 5530.14. IDSs for Navy magazines that store nuclear weapons must comply to applicable criteria in Navy Nuclear Security Manual, OPNAVINST C8126.1.

5.11.2 Naval Command, Control and Ocean Surveillance Center, In-Service Engineering, East Coast Division, Charleston (NISEEAST) Design Control. NISEEAST Charleston, South Carolina, Code 413AM is responsible for designing and installing IDSs for magazines. Notify NISEEAST when a contract to design or construct a high security magazine has been let. NISEEAST will ensure that high security magazine doors are equipped with IDSs that meet applicable electronic security criteria. Paragraphs 5.11.3 through 5.11.4 describe design attributes that are unique to high security magazine doors equipped with externally or internally operated locks.

5.11.3 IDS Interface with HSIL. Equip each externally operated magazine door with the HSIL tamper detection switch. The switch should be wired so that it is normally opened and maintained closed when the alarm is activated and the HSIL is locked. The HSIL shutter plate must be positioned in a secure mode to set up the alarm. Rotating the HSIL shutter plate to access the primary key-way moves a mechanical control cable that in turn moves a ferrous plug out of alignment with the tamper detection switch. If the alarm is set, this will cause it to go off. The ferrous plug moves up and down inside an enclosure located in the door above the HSIL. Install the HSIL tamper detection sensor in a fixed position on the concrete header that goes over the door opening; align it with the enclosure cast into the door when the door is closed and locked. Position the sensor so that it won't easily be hit by cargo and equipment moving in or out of the magazine. Place a physical guard around the tamper detection sensor to protect if from physical harm. For information regarding the placement of the HSIL tamper detection switch, refer to NFESC drawing 92-4-1F.

5.11.4 Balanced Magnetic Switch (BMS). Furnish each internally and externally operated magazine door with a BMS. The BMS is part of the integrated magazine IDS; it will alert the guard force when a magazine door has been open. Make sure that NISEEAST has approved the BMS and its circuitry for use on the high security magazine doors. For information regarding the placement of BMSs for high security box magazines, refer to NFESC drawings 92-4-1F and 92-4-2F.

5.12 Door Seal. Design seals to keep moisture out of magazines. The top, bottom, and sides of each door should form a seal with the magazine

structure when doors are closed and locked. Use material and a design that will last for a prolonged period of time in harsh outdoor environments.

5.13 Monorail and Tractor Canopy. Include canopies to protect carriers, tractors, and monorails in each design. A typical canopy is shown in Figures 5 and 20. Design canopies that provide protection to equipment that might otherwise be subject to ultraviolet light, wind blown sand, and salt spray. Design canopies that allow access to tractor motors, tractor drive wheels, gear reduction units, hydraulic couplings, and door carriers. Design canopies that do not prevent or impede personnel from maintaining equipment.

5.14 Operating Instructions. Mount operating instructions for each externally and internally operated high security door. Mount instructions in clear view of personnel. The instructions must clearly indicate:

a) lock and unlock procedures for doors equipped with the IOL or the HSIL,

b) procedures to manually open and close doors,

c) procedures to open and close the doors using the electrically powered drive system.

In addition, the instructions must explain that when the indicator light on a pushbutton station is illuminated, the locking system is in a secure mode, and the electric conveyance system will not function until the lock is unlocked.

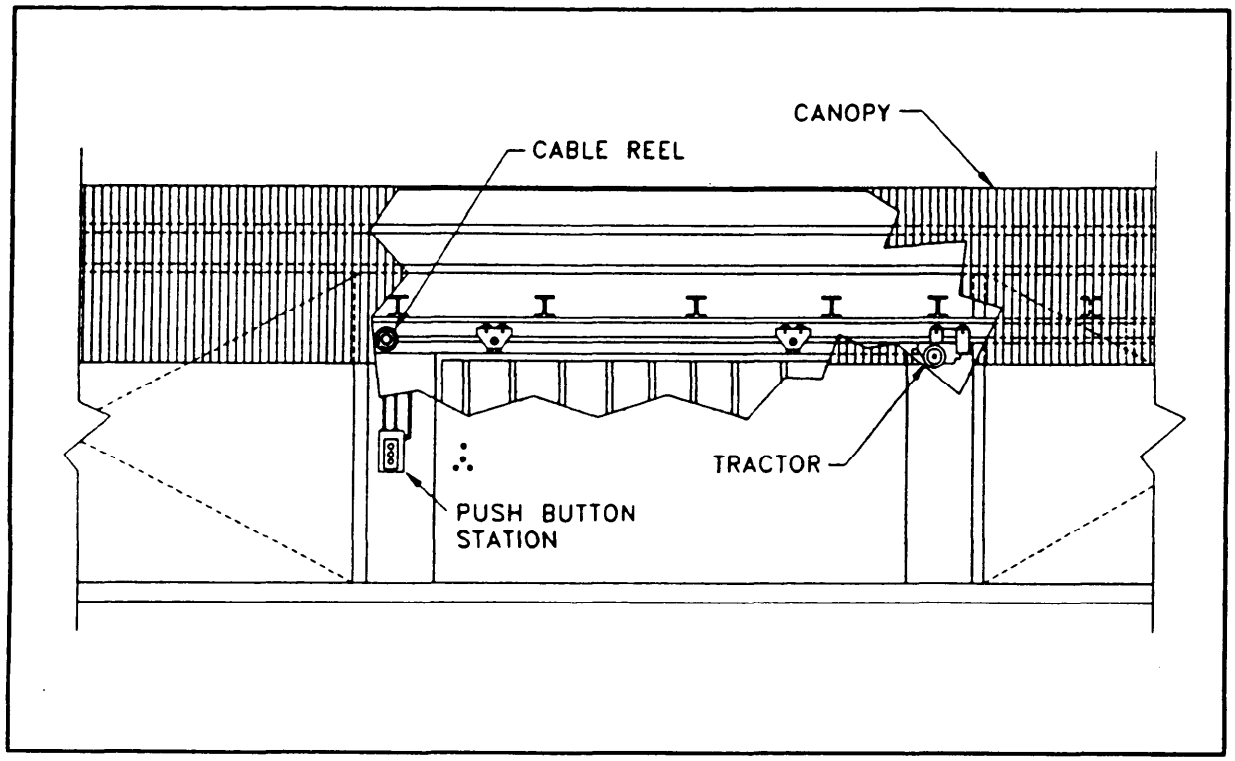

Figure 20
Externally Operated High Security Magazine

Section 6: STRUCTURAL DESIGN CRITERIA

6.1 Introduction. Defending against the physical security explosive threat requires proper response of magazine structural elements. These elements include the door, headwall, header beams, roof, and trench supports. The effect of concern is blast overpressure. In addition to meeting the minimum door cross section, base the design of structural elements on the design blast loads. Use the structural criteria and procedures that follow to provide a safe balanced design for the physical security threat:

a) The door and supporting elements must also meet the blast load requirements for explosive safety. An analysis of the secure magazine door designs based on this handbook must show that the secure door and its supports will not be blown into the magazine by an accidental explosion in an adjacent donor magazine.

b) Structural blast load design of the magazine doors and supports shall comply with NAVFAC P-397, Structures to Resist the Effects of Accidental Explosions. NAVFAC P-397 should be used in conjunction with the structural criteria provided in this handbook.

6.2 Design Loads

6.2.1 Explosives Safety. The standard earth-covered box magazines have been approved to store up to 350,000 pounds NEW. Placing magazines at the minimum intermagazine distance permitted in Table 7-22 of NAVSEA OP-5 will prevent explosion communication. Table 2 also lists the equivalent triangular loads used in the designs of the box magazines. The loading terms used in Table 2 are defined in Figure 21.

Table 2
Explosives Safety Design Blast Loads for NAVFAC Standard Box Magazines

Element	Pressure B_1 (lbf/ sq in.)	Duration T_1 (ms)	Impulse i_1 (lbf/sq in.-ms)	Pressure B_2 (lbf/ sq in.)	Duration T_2 (ms)	Impulse i_2 (lbf/sq in.-ms)
Headwall and Door	360	10.0	1,800	80	17.6	705
Roof	108	25.0	1,350	-	-	-

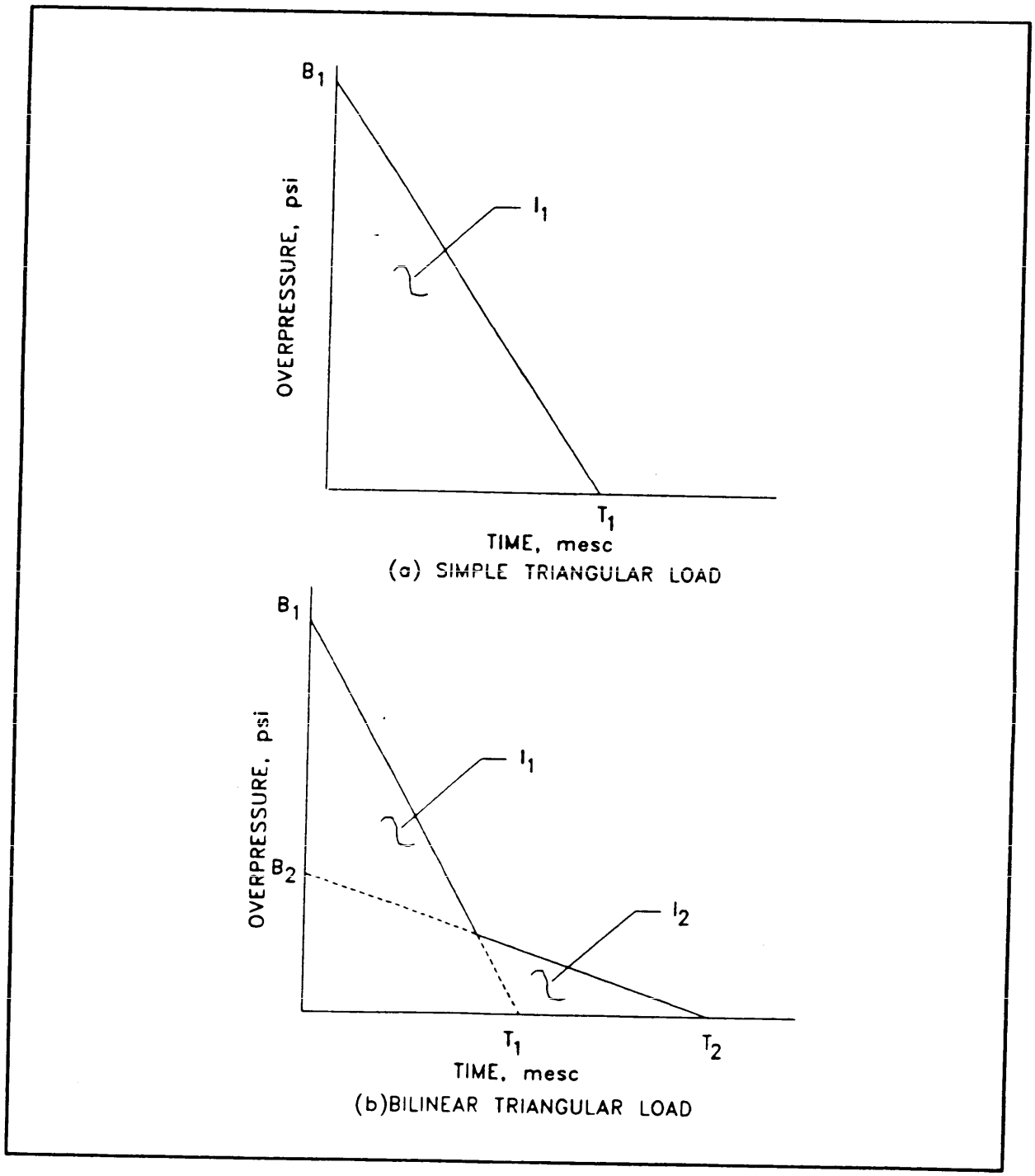

Figure 21
Definition of Design Blast Loading

6.2.2 Physical Security. The weapon threat must be converted to structural design loads in engineering terms. Blast overpressures versus time, fragment weight and velocity, and ground shock are the common load parameters used for structural design. For design purposes consider only the reflected loads striking external headwall and door surfaces. Determine these design loads by using the SHOCK blast load analysis program. SHOCK will calculate the impulse and pressure on all or part of a blast surface bounded by 1 to 4 reflecting surfaces. The required SHOCK program inputs are the length and width of the blast surface, the number and location of the reflecting surfaces, and the location and explosive weight of the charge. A description of the SHOCK input parameters is shown in Figures 22 and 23. To account for uncertainties in the design and construction processes, the charge weight was increased by 20 percent as recommended in NAVFAC P-397.

Because the box magazines have two different door size openings, a design load for each size door had to be calculated. These triangular door loads are shown in Table 3 along with the critical location of the explosive charge.

To complete a design, it will be necessary for the designer to also calculate the unique loading on the individual headwall structural elements (i.e., pilasters and header beams) using the program SHOCK for the dimensions selected by the designer.

Table 3
Physical Security Design Blast Loads for NAVFAC
Standard Earth-Covered Box Magazines

Door Opening W x H (ftxft)	Critical Charge* Location		Pressure B_1 (lbf/sq in.)	Design Load Duration T_1' (ms)	Impulse i_1' (lbf/ sq in.-ms)
	R_a (ft)	S_h (ft)			
16 x 11	2.56	2.55	1,799	0.49	440.7 - 334.4
25 x 11	2.56	2.55	1,194	0.56	

*R_a = Charge standoff distance from door.
S_h = Charge height above floor.

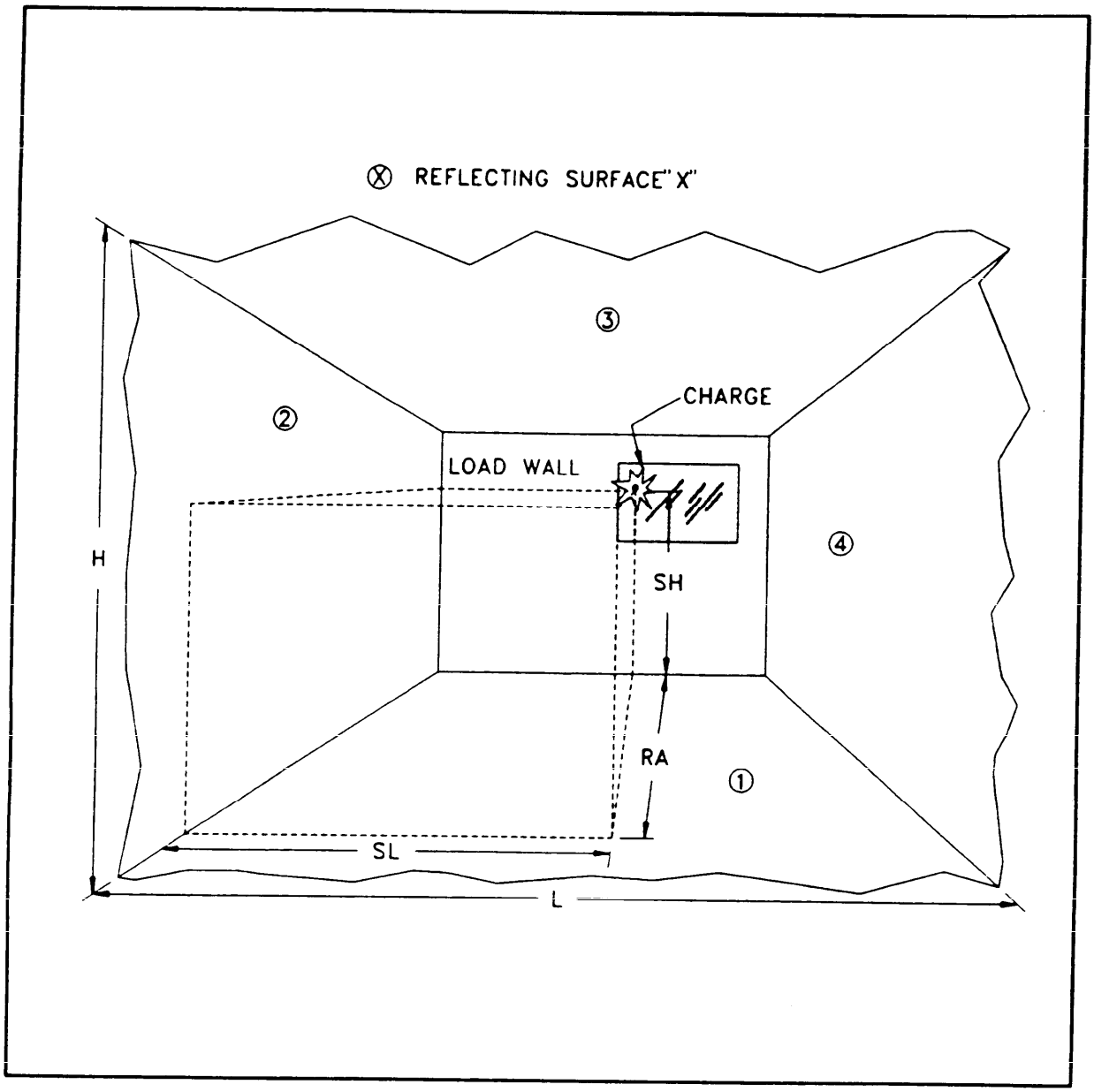

Figure 22
Description of Input Parameters for Shock

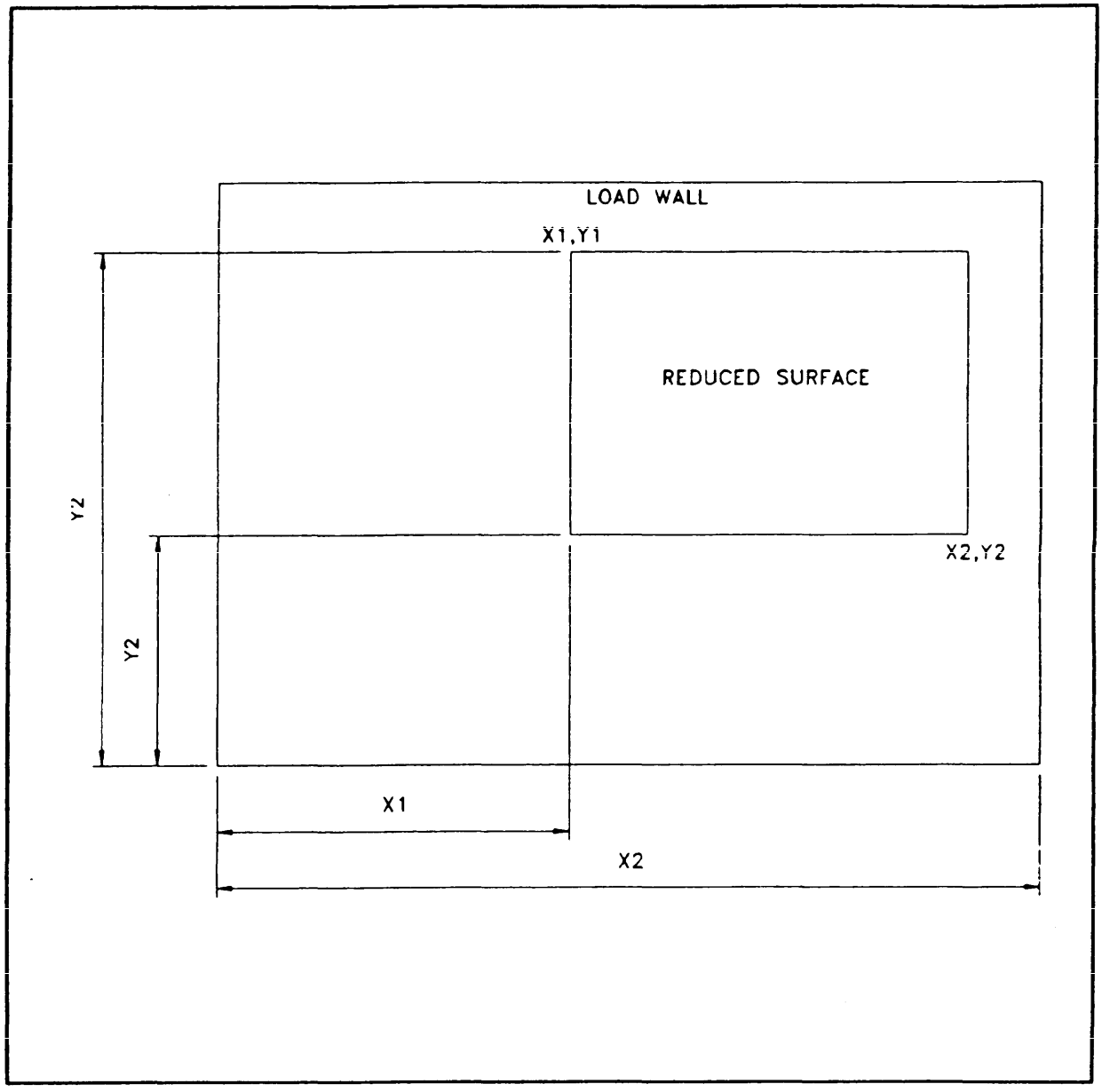

Figure 23
Reduced Surface Parameter for Shock

6.3 Door

6.3.1 General. This section outlines procedures for the design of the horizontal sliding built-up steel blast doors. The minimum door cross-section and material requirements are specified in Section 5, subparagraph 5.2.1. However, the door must also meet the requirements specified below. This door is designed to act as a one-way simply-supported member, spanning vertically for the box magazines. The yield capacity of the webs of the I-beams in shear, as well as web crippling, have to be considered in the design. The door must be designed to accommodate the rebound that results from the physical security explosive loads in subparagraph 6.2.2. There is no rebound requirement for the explosive safety design loads in subparagraph 6.2.1.

6.3.2 Design Stresses. The dynamic design stress, f_{ds}, for bending shall be:

EQUATION: $$f_{ds} = f_{dy} \qquad (\text{for } X_m/X_E \leq 10) \qquad (1)$$

or

EQUATION: $$f_{ds} = f_{dy} + (f_{du} - f_{dy})/4 \qquad (\text{for } X_m/X_E > 10) \qquad (2)$$

where

EQUATION: $$f_{dy} = a\, c_y\, f_y \qquad (3)$$

EQUATION: $$f_{du} = c_u\, f_u \qquad (4)$$

where

f_y = static yield stress

f_u = static ultimate tensile stress

a = average strength increase factor (= 1.1 for ASTM A36 steel)

c_y = dynamic increase factor on the yield stress

c_u = dynamic increase factor on the ultimate stress

Use the following values for ASTM A36 steel:

f_y = 36,000-lbf/in.^{2}

f_u = 58,000-lbf/in.^{2}

a = 1.1

c_u = 1.1

The value of c_y is dependent on the rate of strain. The design curve for ASTM A36 steel is shown in Figure 24. The strain rate, assumed to be a constant from zero strain to yielding, may be determined according to Equation 5:

EQUATION: $$\epsilon = f_{ds}/(E_s\ t_E) \quad (5)$$

where

ϵ = average strain rate in the elastic range of the steel (inch/inch/second)

T_e = time to yield (s)

f_{ds} = dynamic design stress

The dynamic design stress for shear shall be:

EQUATION: $$f_{dv} = 0.55\ f_{ds} \quad (6)$$

The response of structures to blast load is expressed in NAVFAC P-397 in terms of design ranges according to the pressure intensity, namely, high pressure (>> 100 pound-force/square inch), and low pressure (<< 100 pound-force/square inch). The dynamic increase factors, c_y, for yield stress of ASTM A36 steel in the bending mode are as follows:

Low Pressure: $c_y = 1.29$

High Pressure: $c_y = 1.36$

These values assume a strain rate of 0.10 inch/inch/second in the low pressure design range and 0.30 inch/inch/second in the high pressure design range. Based on these assumed strain rates, the design stresses for ASTM A36 steel are given in Table 4. It is anticipated that the dynamic response of secure doors will fall within the high pressure design range. It is recommended that a trial design using the design stresses in Table 4 be used, and then a more accurate design be obtained using Figure 24 once the strain rate has been determined.

6.3.3 Allowable Deflections. The maximum allowable deflection, X_u, is defined in terms of the maximum allowable support rotation, θ_u, following formation of the yield line mechanism. An additional constraint is imposed on the maximum allowable deflection, X_u, by limiting the ductility factor, X_u/X_E, where X_E is the equivalent elastic yield deflection. Since flange buckling of I-beams is prohibited in the presence of the outer and inner plates acting as braces, the maximum allowable deflections for the built-up door are:

$\theta_u = 12$ degrees

$X_u/X_E = 15$

Table 4
Dynamic Design Stresses for ASTM A36 Steel

Pressure Level	$X_m/X_E \leq 10$		$X_m/X_E > 10$	
	f_{ds} (lbf/sq in.)	f_{dv} (lbf/sq in.)	f_{ds} (lbf/sq in.)	f_{dv} (lbf/sq in.)
Low (ϵ=0.1 in./in./sec)	51,080	28,090	54,260	29,840
High (ϵ=0.3 in./in./sec)	53,860	29,620	56,350	30,990

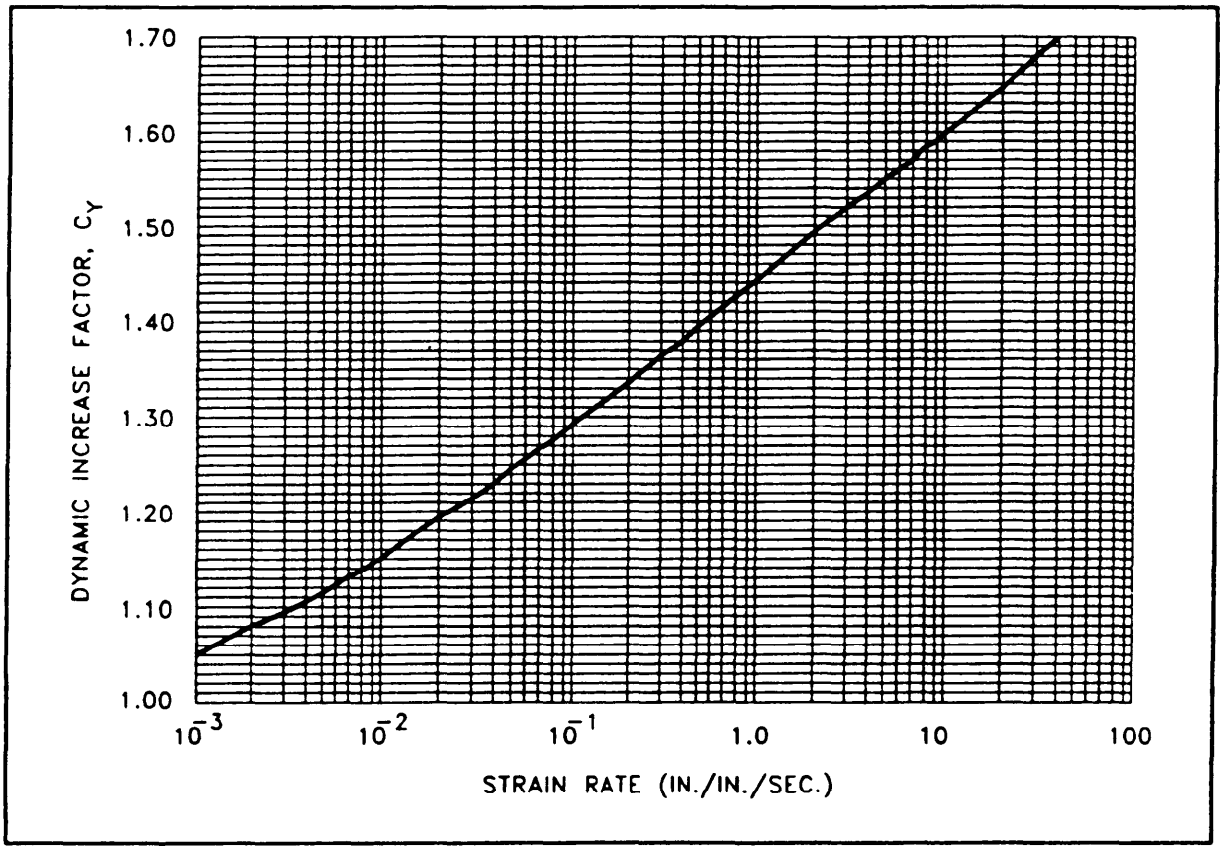

Figure 24
Dynamic Increase Factor for Yield Stress
of ASTM A-36 Steel at Various Strain Rates

A door design shall be considered adequate for resistance to blast loads provided the maximum dynamic deflection, X_m, is such that $X_m \geq X_u$ based on the support rotation and the ductility factor.

6.3.4 Design Procedure. The following procedure is recommended for selecting the required door cross section for both the explosives safety and physical security loads:

Step 1: Choose a cross section for the door. For the initial analysis, use the minimum cross section specified in subparagraph 5.2.1. Establish support conditions for the door. A box magazine door is simply supported at top and bottom.

Step 2: Calculate the effective flange width of the compression flange for both positive and negative (rebound) response:

$$b_e = \left[326 \times \frac{t}{\sqrt{f_y}}\right] \times \left[1 - \frac{71.3}{\left[\frac{w}{t}\right] \times \sqrt{f_y}}\right]$$

where

b_e - effective flange width in inches

t - compression plate thickness in inches

f_y - yield stress in 1000 pound-force/square inch (i.e., ksi)

w - spacing of the I-beam stiffeners within the door in inches

Step 3: With the effective flange width, calculate the positions of the elastic and plastic neutral axis. Next, calculate the elastic moment of inertia (I), the elastic section modulus (S), and the plastic section modulus (Z) of the door for both positive and rebound response.

Step 4: Obtain dynamic design stress, fds. For the initial analysis, use Table 4 (assume $X_m/X_E \leq 10$ and $\epsilon = 3$ inch/inch/second). Otherwise, use value of fds calculated in Step 12c.

Step 5: Calculate the ultimate unit positive moment capacity at midspan, M_p. For a door with a ductility ratio less than or equal to three:

$$M_p = f_{ds}(S + Z)/2$$

For a door with a ductility ratio greater than three:

$$M_p = f_{ds}\ Z$$

Step 6: Calculate the ultimate unit resistance of the simply supported door, r_u:

$$r_u = 8*M_p/L^2$$

where

L = span length of door between supports

Step 7: Calculate the equivalent elastic stiffness of the simply supported door, KE:

$$K_E = (384\ E\ I)/(5\ L^4)$$

Step 8: Calculate the effective unit mass of the door, m_e:

$$m_e = K_{LM}\ m$$

where

m = unit mass of the door, including the mass of the lightweight concrete door fill

K_{LM} = load-mass factor obtained from NAVFAC P-397, Table 3-12.

Step 9: Calculate the effective natural period of vibration, T_n, of the door:

$$T_n = 2\ \pi\ (m_e/K_E)^{1/2}$$

Step 10: Calculate the equivalent maximum elastic deflection, X_E:

$$X_E = r_u/K_E$$

Step 11: Calculate the maximum allowable deflection, X_u, of the door for the constraints imposed in subparagraph 6.3.3 on the maximum allowable ductility factor, X_u/X_E, and the maximum allowable rotation at supports, Πu.

Step 12a: Calculate the maximum positive deflection, X_m, time to reach maximum elastic deflection, T_e, and the time when the

maximum deflection occurs, t_m, of the door produced by the design blast loads given in subparagraphs 6.2.1 and 6.2.2. Use the response charts in Chapter 3 of NAVFAC P-397 or the computer program SOLVER.

Step 12b: Calculate the strain rate, ϵ, from Equation 5 and the ductility ratio, X_m/X_E.

Step 12c: Determine the dynamic increase factor, c_y, from Figure 24 and then calculate f_{ds} from appropriate Equation 1 or 2.

Step 12d: Compare the value of fds used in the design with the value calculated in Step 12c. If two values are within 2 percent of each other, go to Step 13. Otherwise, repeat steps 5 through 12 using the value of fds calculated in step 12c.

Step 13: Compare X_u with X_m. Go to Step 14 if $X_m \leq X_u$. Otherwise, modify the initial cross section and repeat steps 1 through 12. The revised cross section must meet the minimum properties specified in subparagraph 5.2.1.

Step 14: Calculate the support reaction, V_s. Check the shear stress in the door at its supports and repeat the above steps if the shear stress exceeds the design allowable given in Table 4.

Step 15: Design the door supports for the positive dynamic response of the door. In lieu of a dynamic analysis, the door support reaction, V_s, may be used as an equivalent static load for designing the door supports.

Step 16: Design the door restraints to safely resist rebound forces introduced during the rebound phase of the dynamic response from the physical security loads. The restraints are not required to resist rebound forces resulting from the explosives safety loads. Use the computer program SOLVER to determine the maximum negative resistance, r_{m^-}. Damping of 3 percent critical may be used in the elastic regions of the positive and negative resistance-deflection function.

Step 17: Design the casing and connections for the door to safely resist the forces at supports produced by the static uniform loads r_u obtained in Step 6 and r_{m^-} obtained in Step 16.

Step 18: Given an acceptable door design, design the "pilaster/header beam" system to support the door using the procedure described in paragraph 6.4.

6.4 Headwall. The magazine doors will be located in the reinforced concrete headwall. The headwall opening and supports for the blast-resistant

doors shall be reinforced with pilasters and header beams. These members shall be designed as reinforced concrete beams and must meet the requirements specified below. Some requirements for the box magazine pilasters, that are subjected to axial load from the roof, will differ.

6.4.1 Design Stresses

6.4.1.1 Reinforcing Steel. Use A615 (Grade 60) steel to reinforce structural concrete. A statistical analysis of the static yield strength of A615 (Grade 60) reinforcing bars shows that the average yield strength is 10 percent greater than the minimum value required by the ASTM specification. Consequently, the static yield stress, f_y, shall be:

$$f_y = 1.10 \times 60{,}000 = 66{,}000 \text{ lbf/in.}^2$$

The static ultimate stress, f_u, for A615 (Grade 60) shall be:

$$f_u = 90{,}000 \text{ lbf/in.}^2$$

To account for effects of strain rate on the strength properties of materials, use the following Dynamic Increase Factors (DIF) for close-in detonation:

Type of Stress	Dynamic Increase Factor (DIF)	
	f_{dy}/f_y	f_{du}/f_u
Bending	1.23	1.05
Diagonal Tension	1.10	1.00
Direct Shear	1.10	1.00
Tension	1.23	1.05

The dynamic design stress, f_{ds}, shall be as shown in Table 5.

6.4.1.2 Concrete. The static ultimate compressive strength of concrete, f_c', shall be:

$$4{,}000 \leq f_c' \leq 5{,}000 \text{ lbf/in.}^2$$

Table 5
Physical Security Design Blast Loads for Doors of
NAVFAC Standard Box Magazines

Maximum Support Rotation, θ_m (degrees)(a)	Type Stress	Dynamic Design Stress, f_{ds} (psi)(b)
$0 < \theta_m \leq 2$	Bending Diagonal tension Direct shear Tension	81,200 72,600 72,600 81,200
$2 < \theta_m \leq 5$	Bending Diagonal tension Direct shear Tension	84,500(c) 72,600 77,000(c) 84,500(c)
$5 < \theta_m \leq 8$	Bending Diagonal tension Direct shear Tension	87,800(d) 72,600 81,300(d) 87,800(d)

(a) Subparagraph 6.4.2 defines conditions for θ_m.
(b) $f_{ds} = f_{dy}$
(c) $f_{ds} = f_{dy} + f_{du} - f_{dy})/4$
(d) $f_{ds} = f_{dy} + f_{du})/2$

The dynamic ultimate compressive strength of structural concrete, f_{dc}', shall be:

$$f_{dc}' = \text{DIF } f_c'$$

where

DIF = 1.25, compression
DIF = 1.00, diagonal tension and bending
DIF = 1.10, direct shear

6.4.2 Allowable Deflections. For reinforced concrete beams, the maximum allowable deflection, X_u, is defined in terms of the maximum allowable rotation at supports, θ_u, following formation of the yield line mechanism. Beams may be designed to attain limited or large deflections (i.e., deflections corresponding to incipient failure). Under flexural action, a beam may attain deflections corresponding to 2 degrees support rotation with a Type I-beam cross section to provide the ultimate moment capacity. The flexural

action may be extended to 4 degrees support rotation if equal tension and compression reinforcement is furnished. A Type II or III cross section provides the ultimate moment capacity and the required closed ties (shear reinforcement) restrain the compression reinforcement. If sufficient lateral restraint is provided, the beam may attain 8 degrees support rotation under tension membrane action. However, it is likely that the box magazine will not be capable of providing sufficient lateral restraint. Therefore, the maximum allowable deflections for the pilasters and header beams are:

$$\theta_u = 4 \text{ degrees}$$

However, unless a beam is simply supported, diagonal bars will be required at supports to prevent direct shear failure when the support rotation exceeds 2 degrees. Diagonal bars are not typically practical in beams. Therefore, it is recommended that pilasters and header beams that are treated as fixed-end beams should be designed for 2 degrees support rotation and with an adequate cross-sectional area for the direct shear capacity of the concrete, V_d, to exceed the ultimate direct shear force, V_s. Since the box magazine pilaster is a primary member that is subjected to an axial load, it is not permitted to attain large plastic deformations. Therefore, the lateral deflection must be limited to a maximum ductility (X_u/X_E) of 3. For reference purposes, it is noted that the following allowable deflections were used in the current box magazine designs:

Pilaster: $X_u/X_E = 3$ (limited deflection)

Header Beam: $\theta_u = 2$ degrees

6.4.3 Design Procedure. The following procedure is recommended as a safe practical design procedure for pilasters and header beams subjected to the explosives safety and physical security loadings. For any magazine design, the headwall member that directly supports the door must be designed first, followed by the design of the other member.

Step 1: Design the door to safely resist the design blast loads. The box magazine door is simply supported at top (header beam) and bottom (trench). Assume the door and slabs in the headwall are supported on nondeflecting supports. Draw the hinge line collapse mechanism for adjoining members.

Step 2: Calculate the equivalent uniformly distributed design blast load. For explosives safety design, assume the loading provided in subparagraph 6.2.1 acts over the entire headwall area. For physical security design, assume the loading provided in subparagraph 6.2.2 is only valid for the door area. Determine the loadings on the remaining headwall area by using the program SHOCK (utilize the reduced area option) for the specific dimensions of the trial design. The final total load consists of the blast load

that acts directly on the headwall member plus the blast load that is transferred from "contributing areas" of adjacent surfaces.

Step 2a: Headwall Member. Use direct blast load acting on surface of member.

Step 2b: Adjacent Monolithic Elements. Either of the following two methods are acceptable:

a) Treat contributing area of adjacent surfaces as rigid plates that transfer all their blast load to the member. Convert this load to an equivalent uniform blast load applied along the entire length of the member.

b) Assume contributing area of adjacent surfaces produces a dynamic line load equal to the ultimate support shear, V_s, produced by the dynamic ultimate flexural resistance, r_u, of the surface acting over the tributary area. V_s for one- and two-way elements is computed using procedures outlined in NAVFAC P-397. Treat the load as a rectangular pulse of constant magnitude, V_s, for a duration equal to the time (t_m) calculated for the adjacent element to reach its maximum displacement. At this time, the loading then linearly decays to zero in a time interval equal to $T_N/4$, where T_N equals the effective natural period of vibration for adjacent element.

Step 2c: Adjacent Non-Monolithic Elements (i.e., door). Use one of the two methods outlined in Step 2b, or treat the load as a uniformly distributed design static load, r_e, according to method outlined in Step 3.

Step 3: Calculate the equivalent uniformly distributed design static load, r_e. If elected in Step 2c, the contributing area of adjacent surfaces not cast monolithic (i.e., door) with the member produces a static line load on the member. This load is equal to the ultimate support shear, V_s, produced by the dynamic ultimate flexural resistance, r_u, of the surface acting over the tributary area.

Step 4: Calculate the maximum torsion, T_u, in the member resulting from: (a) the ultimate negative moments applied by adjacent elements that are cast monolithic, and (b) the door line load applied eccentrically to the member. Design of the member to resist the effects of torsion should follow guidelines established in NAVFAC P-397 and the ACI code.

Step 5: Select a trial cross section for the design of the headwall member. In most cases, shear and torsion, not bending, will control dimensions of the cross section.

Step 6: Analyze the adequacy of the trial design selected in Step 5 to prevent failure in shear, torsion, and bending. The design blast load computed in Step 2 is assumed to act in combination with the design static load, r_s, found in Step 3. Consider the following factors in the design/analysis process:

a) Bending. Assume failure in bending if the maximum angle of support rotation (θ_m) exceeds the allowable deflection established in subparagraph 6.4.2.

b) Shear. Limit the maximum shear stress on the critical section to that allowed for deep beams by the ACI code. Account for the effects of torsion on the shear capacity, v_c, of the concrete, using procedures in NAVFAC P-397. Design the size and spacing of closed stirrups to carry the excess shear stress, $v_u - v_c$, using procedures in NAVFAC P-397. Design the size and spacing of diagonal bars (truss bars) to resist the direct shear at the face supports using the criteria in NAVFAC P-397.

c) Torsion. Design the size and spacing of closed ties to resist the torsion, using the criteria in NAVFAC P-397.

Step 7: Repeat Steps 5 and 6 until the trial design meets the requirements of NAVFAC P-397 and the ACI code for bending, shear, and torsion.

6.5 Computer Programs

6.5.1 SHOCK. The User's Manual for the computer program SHOCK is available from NFESC. SHOCK is a blast load analysis program that will calculate the impulse and pressure on all or part of a blast surface that is bounded by 1 to 4 reflecting surfaces. The required input is the length and width of the blast surface, the number and location of the reflecting surfaces, and the explosive weight and location of the charge. SHOCK calculates the impulse and pressure on either all or part of the blast surface from the incident blast wave and from the waves reflecting off of each adjacent surface. SHOCK uses these results to calculate the maximum average pressure on the blast surface from each incident and reflected wave, and the total average impulse from the sum of all waves. SHOCK also calculates the impulse duration on the blast surface.

6.5.2 SOLVER. The User's Manual UG-0020, SOLVER User's Guide, Version 2.2, Dynamic Response Analysis of Single Degree of Freedom Systems, for the computer program SOLVER is available from NFESC. Inputs to SOLVER are a

series of parameters describing the resistance-deflection function and damping factor for the trial design, and the design blast loading. Outputs from SOLVER are the deflection-time history, including the maximum positive deflection, X_m; the maximum negative (rebound) deflection, X_m -; the maximum negative (rebound) resistance, r_m -; the time to reach maximum elastic deflection, T_e; and the time at which the maximum deflection occurs, t_m. SOLVER is strongly recommended to support the design of the doors and reinforced concrete support members.

Section 7: QUALITY CONTROL

7.1 Locking Door Edge. Define a true horizontal reference plane that passes through the magazine. This plane also passes through the magazine door. Erect and adjust magazine doors so that their locking edges (i.e., the door edge that the bolt-work interlock is fastened to) are perpendicular to the horizontal reference plane (see Figure 25). Ensure that when erected the plane surface of each locking door edge lies between two vertical planes that are parallel to one another and perpendicular to the defined horizontal reference plane. Maintain no more than 0.30 inch between these parallel planes (see Figure 26).

7.1.1 Door Flatness. When the door is installed ensure that its inside and outside door surfaces are perpendicular to the horizontal reference plane defined in paragraph 7.1. Define two more imaginary planes; these planes must be parallel to each other and must be defined as perpendicular to the reference plane. These planes are between 10-3/4 inches and 11-1/4 inches apart. They contain the entire magazine door (see Figure 27). The vertical reference planes shown in Figure 26 are perpendicular to the vertical reference planes shown in Figure 27 and the horizontal reference plane shown in Figure 25.

7.2 Adjustability of Carrier Links. For a magazine door to hang vertically, the forces that act between door connections and carrier link members must pass through the center of gravity of each door. Due to uncertainties in calculating the center of gravity for any given magazine door, it is necessary to design carrier link member to door connections so that they have a plus or minus 1-inch adjustment. This adjustability must be in a direction perpendicular to the directions that a door translates in while opening and closing (see Figure 28).

7.3 Vertical Adjustment of Monorails. Ensure that monorails can be leveled subsequent to installation. Mount monorails with hanger rods, clamps, fittings, and other hardware that will provide a means to raise and lower the monorail to maintain its level during a lifetime of service.

7.4 Horizontal Adjustment of Monorails. Mount monorails with hanger rods, clamps, fittings, and other hardware that will provide horizontal adjustability. Once erected, the hardware must allow adjustment perpendicular to the monorail and parallel to the horizontal reference plane defined in paragraph 7.1. Choose an adjustment range that allows for the maximum movement of a magazine door, toward and away from the headwall, while in a closed position (see paragraph 7.5).

7.5 Rebound Trench Clearance. Maintain no more than 1/8 inch of clearance between front and rear magazine door surfaces, and parallel adjacent rebound trench surfaces (see Figure 29). The clearances cited can be achieved via monorail adjustment specified in paragraph 7.4 and by maintaining door flatness as discussed in subparagraph 7.1.1.

7.6 Cycling the Locking System. Following construction of high security magazine door systems, cycle the HSIL or IOL lock through 100 complete operational cycles. Do this following complete installation of the drive and locking subsystems. This will ensure that all of the locking subsystems, including the bolt-work, function properly.

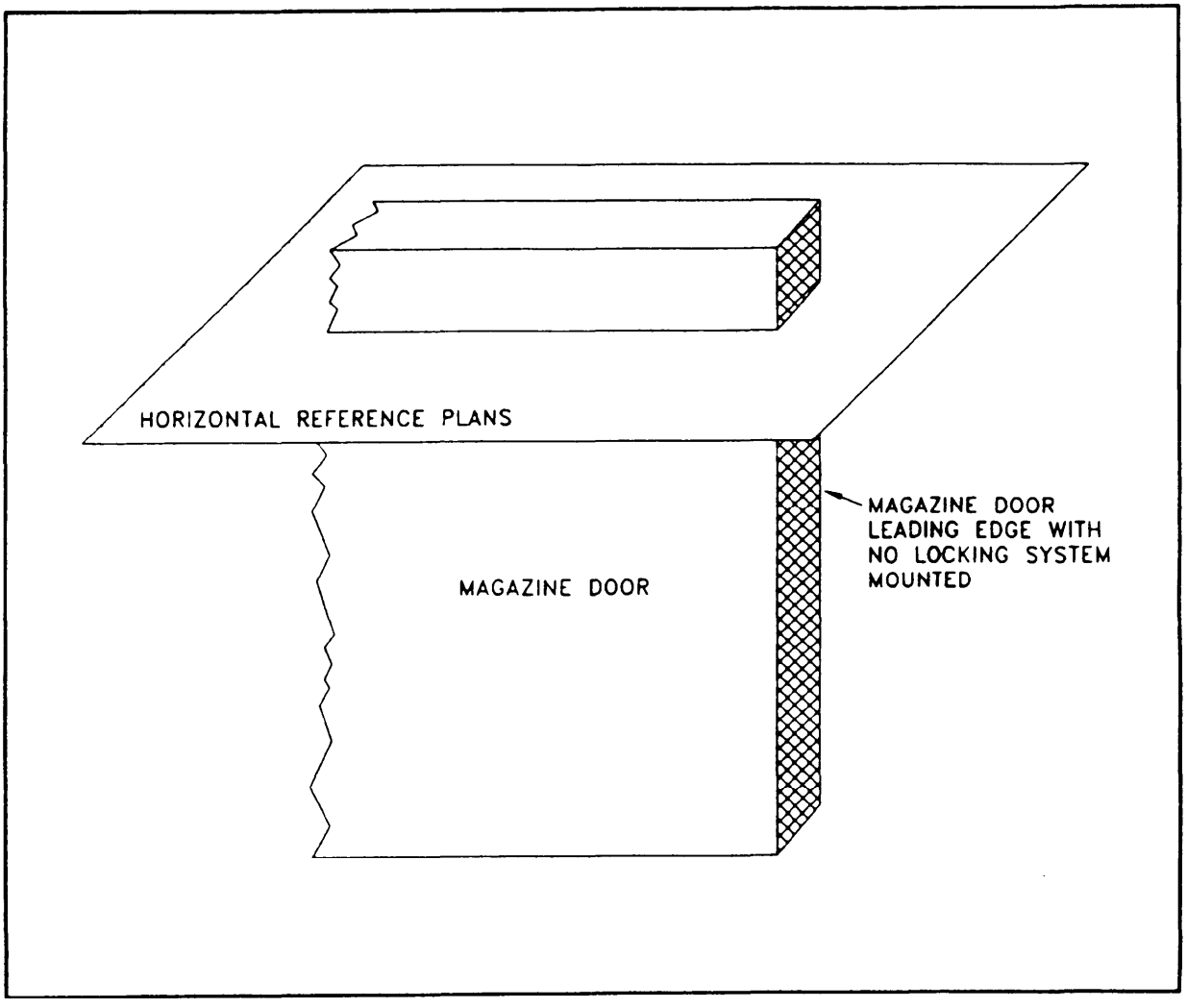

Figure 25
Using an Imaginary Horizontal Reference Plane
to Ensure that Magazine Doors Hang Vertically

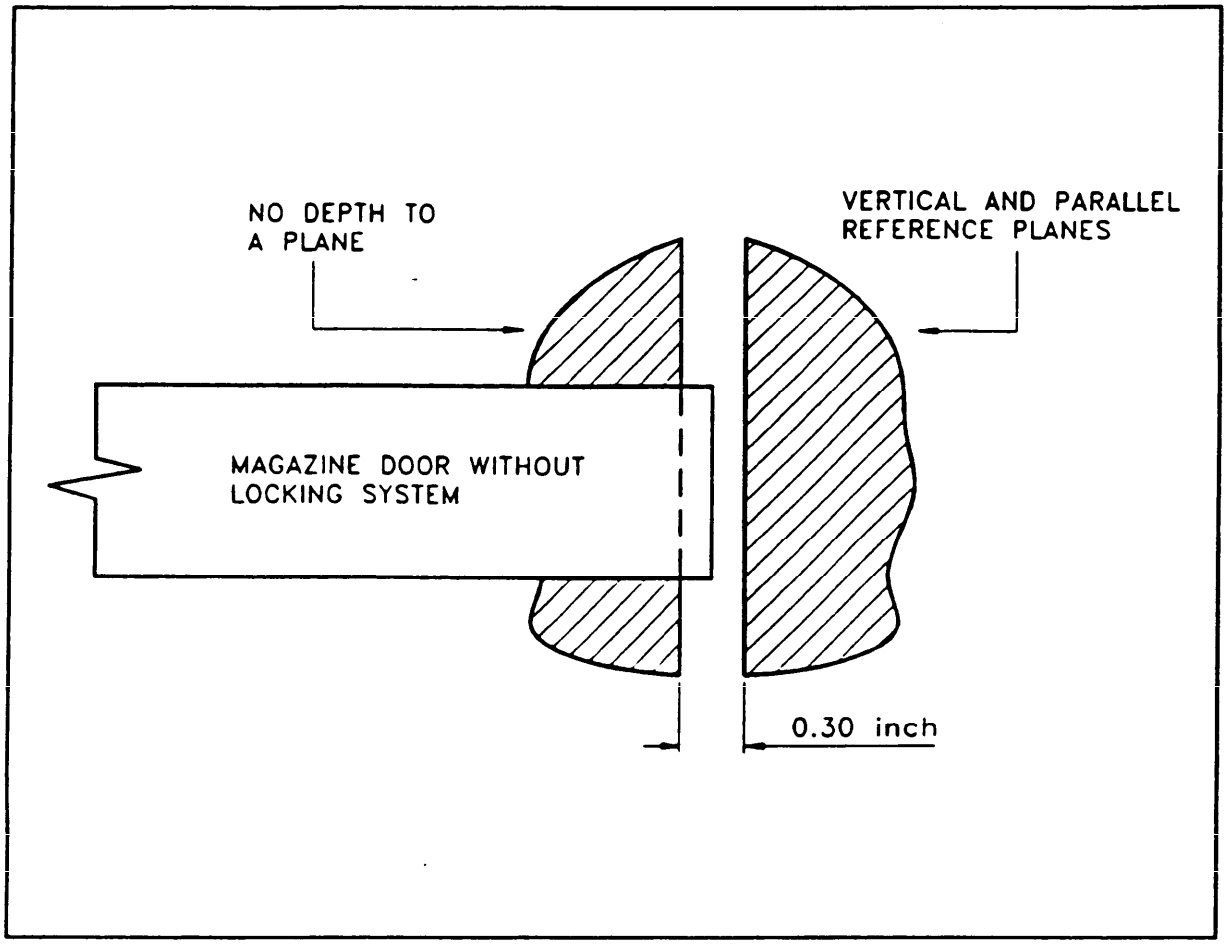

Figure 26
Locking Edge Flatness

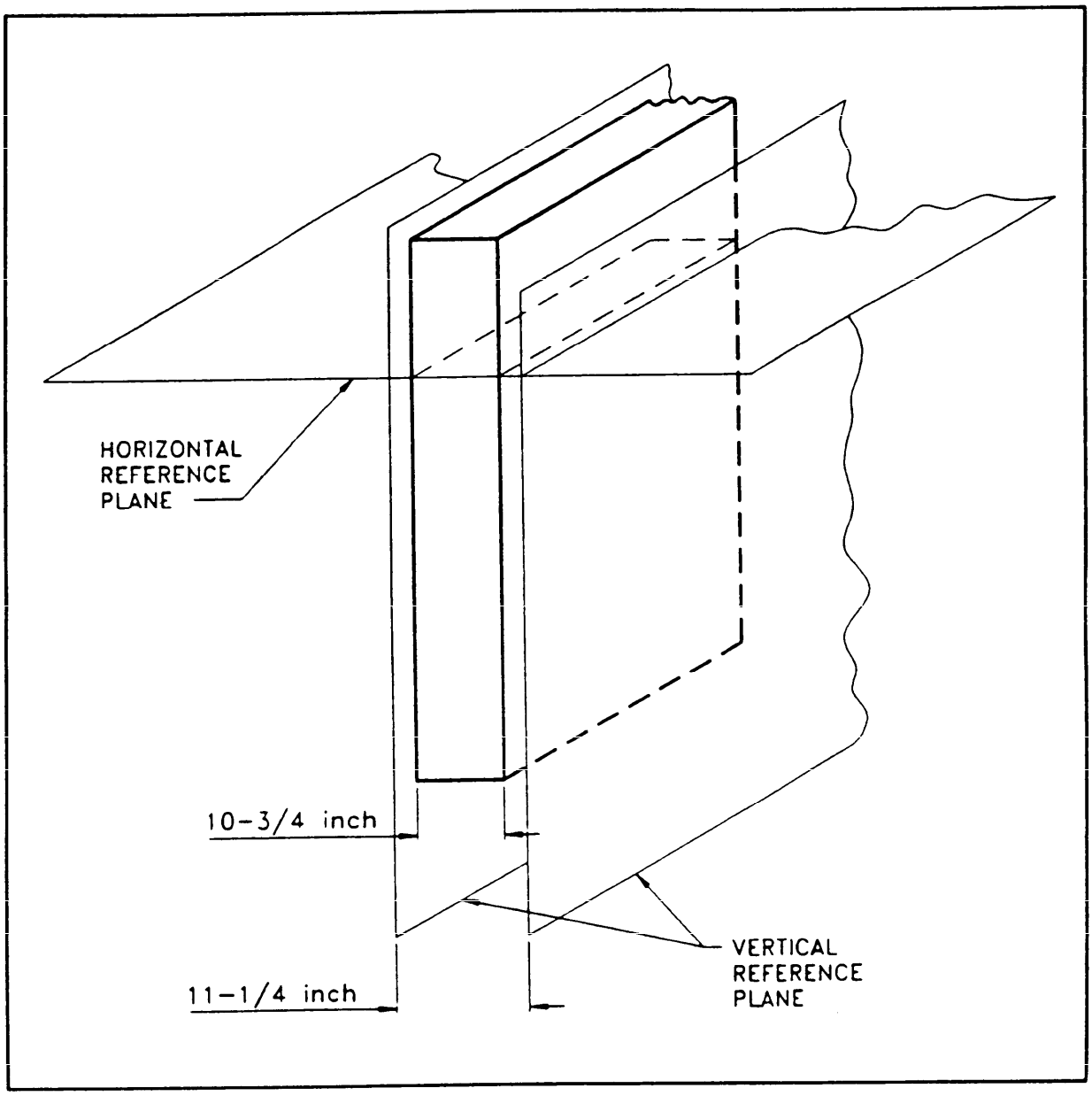

Figure 27
Door Flatness

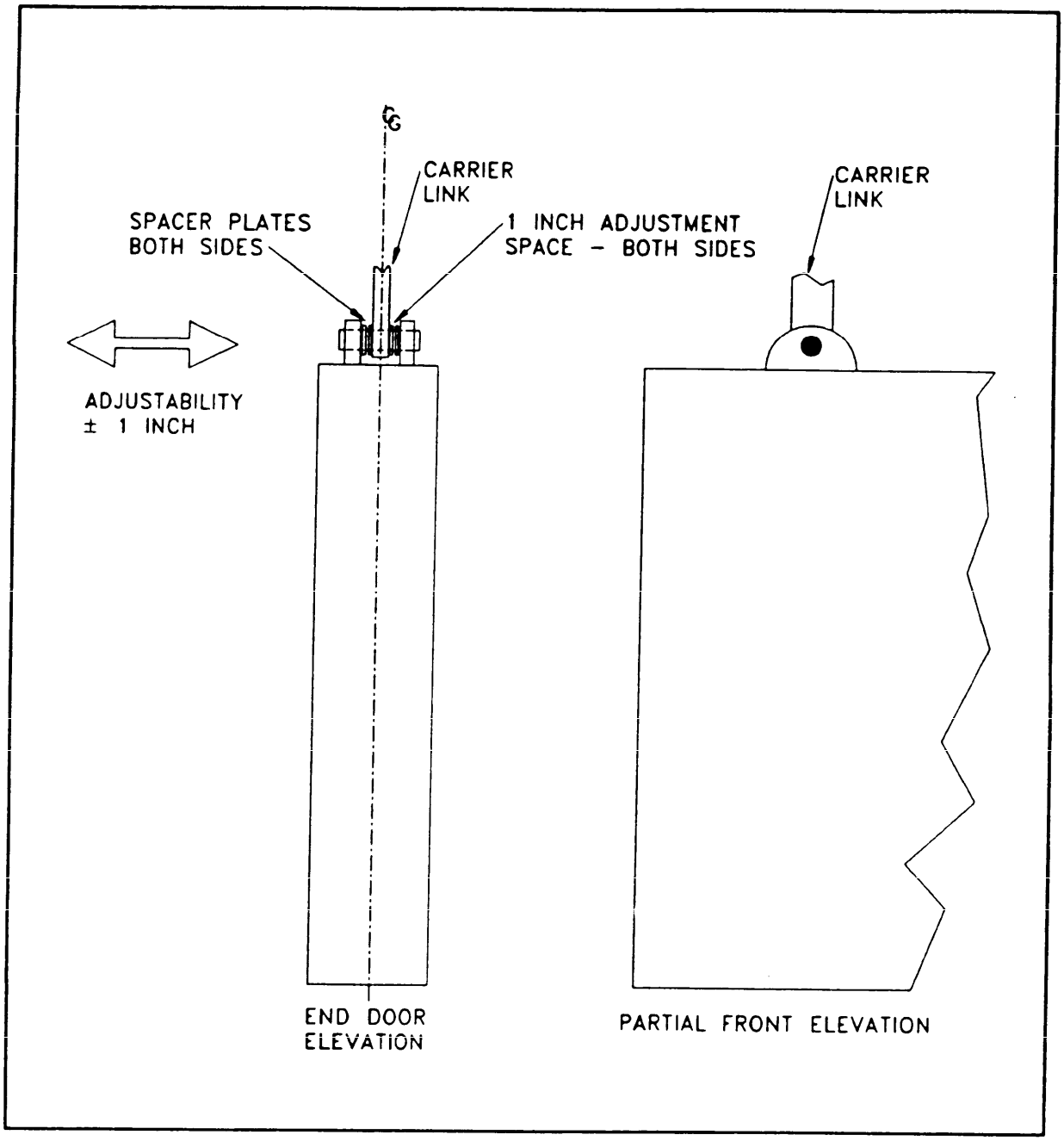

Figure 28
Side to Side Adjustability of Carrier Link Plates

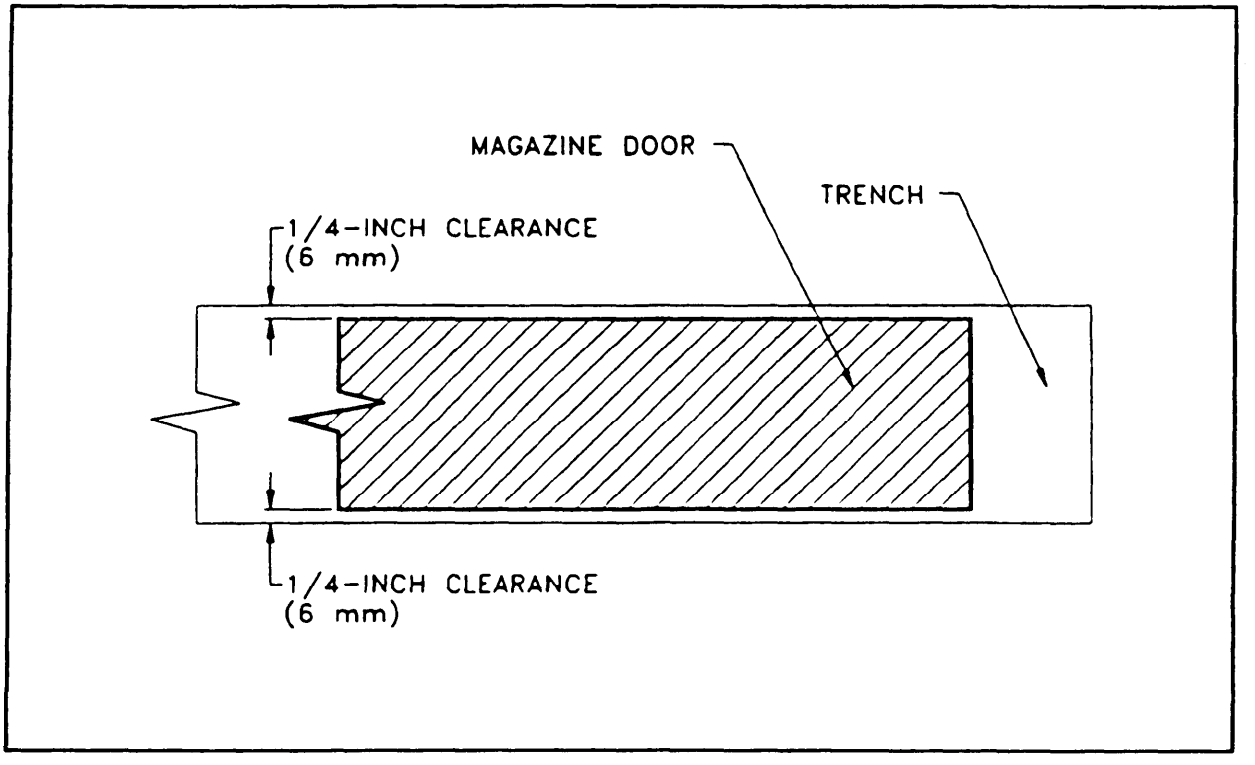

Figure 29
Trench Clearances

Section 8: DESIGN CHECKLIST

8.1 Drive System Electrical Requirements Checklist

a) Select outdoor electrical pushbutton stations that are rated NEMA 3R, 4, or 4X.

b) Ensure that all internal magazine electrical equipment is approved by UL or Factory Mutual Insurance Company for use in Class I, Division 2, Group D, and Class II, Division 2, Group G hazardous locations as defined in NEC Article 725.

c) Maintain control and power circuits to translating tractor motors via multiconductor cables with 10-AWG insulated conductors.

d) Select tractor motors designed for continuous duty.

e) Select tractor motors designed to withstand high pressure wash down.

f) Select tractor motors designed to be powered by three-phase 208/230 or 460 VAC.

g) Select PWM programmable AC controllers.

h) Select PWM programmable controllers that change the speed of tractor motors by changing AC output frequency.

i) Select tractor motors that meet Class C service requirements defined in ANSI MH 27.1.

j) House magazine drive controls for externally operated doors in NEMA 3R, 4, or 4X four station pushbutton enclosures.

k) Design tractor motor controller power input and output circuits according to NEC Article 430.

l) Design control circuits that go to pushbutton stations according to NEC Article 725.

m) Do not use variable voltage controllers.

n) Do not use the lightning ground girdle as an equipment ground

o) Use stranded conductors in cable that is rolled on and off of cable reels.

8.2 Tractor Requirements Checklist

a) Furnish one tractor per door.

b) Connect tractors to doors with draw bars designed to compensate for lateral movement of the door.

c) Select tractors that have a hydraulic coupling and a gear reduction unit.

d) Select tractors with four or more carrier wheels that ride along the top flange of a monorail.

e) Select tractors that have a drive wheel that uses the underside of the bottom monorail flange as its tracking surface.

f) Equip each magazine door with at least two carriers as defined in ANSI MH 27.1.

g) Provide tractors with components that meet the requirements for Class C service as defined in ANSI MH 27.1.

h) Select tractor motors that will supply sufficient power to move doors from closed to open in no more than 2 minutes.

i) Take friction caused by weather seals and rebound mechanisms into account when sizing motors.

j) Protect tractors from exposure to harsh outdoor environments by specifying that their components are made from or coated with corrosion-resistant materials. Harsh outdoor elements may include: wind blown sand, ultraviolet radiation, salt spray, and fog.

k) Shelter rubber or plastic drive wheels from exposure to UV radiation.

l) Do not use tractors to support magazine doors; use separate carriers to support magazine doors.

m) Do not use exposed drive chains or belts to directly or indirectly transmit shaft work to hydraulic tractor couplings or gear reduction units.

8.3 Physical Security Requirements Checklist

a) Ensure that locked pilasters overlap the front of doors on the lock side by 3.0 inches plus or minus 1/8 inch.

b) Install modular lock boxes in doors before they are filled with lightweight concrete.

c) Ensure that door reinforcement I-beams are no more than 15 inches on center.

d) Ensure that IDS and BMS subassemblies are installed and operate properly.

e) Counter the prospect of explosive rebound as required by Section 6.0 of this handbook.

f) Install physical security hardware as specified in Section 5, paragraph 5.8.

8.4 General Mechanical Checklist

a) Furnish each door system with a monorail as specified in Figure 9.

b) Furnish monorails with a means to adjust their elevation and level.

c) Provide monorails with adjustment toward and away from the magazine headwall as specified in Section 7, paragraph 7.4.

d) Install a canopy over each magazine door and drive system.

e) Supply magazines with trench covers so that vehicles, equipment, and personnel can easily go in and out of magazines.

REFERENCES

NOTE: THE FOLLOWING REFERENCED DOCUMENTS FORM A PART OF THIS HANDBOOK TO THE EXTENT SPECIFIED HEREIN. USERS OF THIS HANDBOOK SHOULD REFER TO THE LATEST REVISIONS OF CITED DOCUMENTS UNLESS OTHERWISE DIRECTED.

FEDERAL/MILITARY INSTRUCTIONS

Unless otherwise indicated, copies are available from the Naval Publishing and Printing Service (NPPSO), Standardization Document Order Desk, Building 4D, 700 Robbins Avenue, Philadelphia, PA 19111-5094.

INSTRUCTIONS

NAVFACINST 11012.134b	Security Measures in the Planning and Design of Nuclear Weapons Facilities
OPNAVINST C8126.1	Navy Nuclear Security Manual
OPNAVINST 5530.14	Physical Security Instruction for Arms, Ammunition, and Explosives

NON-GOVERNMENT PUBLICATIONS

AMERICAN SOCIETY FOR TESTING AND MATERIALS (ASTM)

ASTM B177	Practice for Chromium Electroplating on Steel for Engineering Use

(Unless otherwise directed, copies are available from American Society for Testing and Materials (ASTM), Philadelphia, PA 19103.)

AMMANN & WHITNEY CONSULTING ENGINEERS

4-11012	Redesign of Standard Design for Box Magazines

(Unless otherwise directed, copies are available from Ammann & Whitney Consulting Engineers, 6715 E. Church St, Douglasville, GA, 30134.)

CUSTODIAN
NAVY - YD1

PREPARING ACTIVITY
NAVY - YD1

PROJECT NO.
FACR-1132

STANDARDIZATION DOCUMENT IMPROVEMENT PROPOSAL

INSTRUCTIONS

1. The preparing activity must complete blocks 1, 2, 3, and 8. In block 1, both the document number and revision letter should be given.
2. The submitter of this form must complete blocks 4, 5, 6, and 7.
3. The preparing activity must provide a reply within 30 days from receipt of the form.

NOTE: This form may not be used to request copies of documents, nor to request waivers, or clarification of requirements on current contracts. Comments submitted on this form do not constitute or imply authorization to waive any portion of the referenced document(s) or to amend contractual requirements.

I RECOMMEND A CHANGE:	1. DOCUMENT NUMBER	2. DOCUMENT DATE (YYMMDD)
	MIL-HDBK-1013/11	950210

3. DOCUMENT TITLE
INSTRUCTION FOR PLANNING AND DESIGN OF HIGH SECURITY MAGAZINE DOOR CONSTRUCTION PROJECTS

4. NATURE OF CHANGE *(Identify paragraph number and include proposed rewrite, if possible. Attach extra sheets as needed.)*

5. REASON FOR RECOMMENDATION

6. SUBMITTER

a. NAME (Last, First, Middle Initial)	b. ORGANIZATION	
c. ADDRESS (Include Zip Code)	d. TELEPHONE (Include Area Code) (1) Commercial (2) AUTOVON (If applicable)	7. DATE SUBMITTED (YYMMDD)

8. PREPARING ACTIVITY

a. NAME	b. TELEPHONE (Include Area Code)	
COMMANDING OFFICER NAVAL FACILITIES ENGINEERING SERVICE CENTER	(1) Commercial (805) 982-1562	(2) AUTOVON 551-1562
c. ADDRESS (Include Zip Code) ATTN ESC 66 560 CENTER DRIVE PORT HUENEME, CA 93043-4328	IF YOU DO NOT RECEIVE A REPLY WITHIN 45 DAYS, CONTACT: Defense Quality and Standardization Office 5203 Leesburg Pike, Suite 1403, Falls Church, VA 22041-3466 Telephone (703) 756-2340 AUTOVON 289-2340	