INCH-POUND

MIL-HDBK-1013/12
10 MARCH 1997

MILITARY HANDBOOK

# EVALUATION AND SELECTION ANALYSIS OF SECURITY GLAZING FOR PROTECTION AGAINST BALLISTIC, BOMB, AND FORCED ENTRY TACTICS

AMSC N/A AREA FACR

DISTRIBUTION STATEMENT A. Approved for public release; distribution is unlimited.

## ABSTRACT

This handbook provides guidance to ensure that appropriate physical security considerations are included in the selection of glazing systems. The handbook is divided into two main parts: the introduction and analysis, and includes six supporting appendixes.

The introduction begins with a section on the purpose and scope of the handbook and explains how to use it. A second section describes the different types of security glazings available. The final section characterizes aggressor threats and tactics that are applicable to glazing selection.

The analysis discussion provides an overview and five other sections: ballistics, bomb, and forced entry attack analyses; environmental analysis; and cost analysis. The sections on attack analyses set minimum requirements and evaluate performance of glazing systems against the three tactics considered. The environmental analysis section provides a list of environmental effects to evaluate when incorporating security glazing systems into a facility. The cost analysis section provides procedures to estimate procurement and installation costs for a variety of glazing systems.

The appendixes cover process charts, security glazing planning and analysis worksheets, Safevue procedures, risk analysis, examples, and cross-sections. The first appendix provides an introduction to process chart structures. The second appendix contains worksheets for use with selection and risk analysis procedures. The third appendix provides procedures for using the computer program Safevue.

The fourth appendix includes an overview of risk analysis and three other sections: assets, design basis threat, and level of protection. This appendix assists in defining security requirements at the start of a project for efficient and cost-effective integration into the total design. The section on assets establishes asset category, criticality, replaceability, and relative value. The design basis threat section defines the threats to each asset in terms of likely aggressor, likelihood of aggression, and applicable tactics and severity levels. The section on level of protection determines an appropriate level of protection for each identified asset.

The fifth appendix contains examples that clarify the use of procedures and worksheets in selecting and evaluating glazing systems. The sixth appendix provides illustrations of recommended cross-sections.

# FOREWORD

This military handbook has been developed from analyses of test results and from selection of the best design practices of the Naval Facilities Engineering Command, other DOD services and Government agencies, foreign governments, and the private sector.

Design will evolve as new technologies are developed and new requirements are imposed. Accordingly, recommendations for improvement are encouraged and should be furnished to the Naval Facilities Engineering Service Center, Code ESC60, Port Hueneme, CA 93043, telephone (805) 982-1693. Any questions on engineering and design criteria contained herein should be referred to the Naval Facilities Engineering Service Center, Code ESC66, Port Hueneme, CA 93043, telephone (805) 982-1581.

DO NOT USE THIS HANDBOOK AS A REFERENCE IN A PROCUREMENT DOCUMENT FOR FACILITIES CONSTRUCTION. IT IS TO BE USED IN THE PURCHASE AND PREPARATION OF FACILITIES PLANNING AND ENGINEERING STUDIES AND DESIGN DOCUMENTS USED FOR THE PROCUREMENT OF FACILITIES CONSTRUCTION (SCOPE, BASIS OF DESIGN, TECHNICAL REQUIREMENTS, PLANS, SPECIFICATIONS, COST ESTIMATES, REQUEST FOR PROPOSALS, AND INVITATION FOR BIDS). DO NOT REFERENCE IT IN MILITARY OR FEDERAL SPECIFICATIONS OR OTHER PROCUREMENT DOCUMENTS.

CONTENTS

Section 1 INTRODUCTION ..... 1
1.1 Purpose and Scope..... 1
1.2 Handbook Subject Matter..... 1
1.2.1 Introductory Material..... 1
1.2.1.1 Introduction..... 2
1.2.1.2 Glazing System Overview..... 2
1.2.1.3 Aggressor Threats and Tactics..... 2
1.2.2 Analysis..... 2
1.2.2.1 System Analysis..... 2
1.2.2.2 Ballistic Resistant Glazing..... 2
1.2.2.3 Blast Resistant Glazing..... 2
1.2.2.4 Forced Entry Resistant Glazing..... 3
1.2.2.5 Environmental Analysis..... 3
1.2.2.6 Cost Analysis..... 3
1.2.3 Appendixes..... 3
1.2.3.1 Process Charts..... 3
1.2.3.2 Security Glazing Planning and Analysis Worksheets..... 3
1.2.3.3 Safevue Procedures..... 3
1.2.3.4 Risk Analysis..... 3
1.2.3.5 Examples..... 4
1.2.3.6 Cross-Sections..... 4
1.3 Using the Handbook..... 4
1.3.1 Procedures..... 4
1.3.1.1 Required Information..... 5
1.3.1.2 Descriptive Text..... 5
1.3.1.3 Process Charts..... 6
1.3.2 The User..... 6
1.3.3 Organization of Procedures..... 6
1.4 Related Technical Documents..... 6
1.5 Related Instructions..... 6
1.5.1 OPNAVINST 3300.54..... 11
1.5.2 OPNAVINST 5510.1H..... 11
1.5.3 OPNAVINST 5530.13B..... 11
1.5.4 OPNAVINST 5530.14B..... 11
1.5.5 OPNAVINST 5530.15..... 11
1.5.6 OPNAVINST C8126.1A..... 11
Section 2 GLAZING SYSTEM OVERVIEW ..... 12
2.1 Introduction..... 12
2.2 Glazing Cross-Sections..... 12
2.2.1 Monolithic Cross-Sections..... 13
2.2.1.1 Annealed Glass..... 13
2.2.1.2 Heat Strengthened Glass..... 14

2.2.1.3 Thermally Tempered Glass..... 14
2.2.1.4 Chemically Treated Glass..... 15
2.2.1.5 Wire-Reinforced Glass..... 16
2.2.1.6 Polycarbonate..... 17
2.2.1.7 Acrylic..... 18
2.2.2 Laminated Cross-Sections..... 18
2.2.2.1 Interlayer Materials..... 19
2.2.2.2 Fragment Retention Film..... 20
2.2.2.3 Thermally Tempered Glass (TTG)..... 21
2.2.2.4 Laminated and Fused Polycarbonate..... 21
2.2.2.5 Glass-Clad Polycarbonate..... 22
2.2.2.6 Glass-Clad Ionomer..... 23
2.2.3 Insulated/Air Gap Cross-Sections..... 24
2.3 Frames..... 24
2.3.1 Frame Systems..... 24
2.3.1.1 Main Frame..... 24
2.3.1.2 Subframe..... 25
2.3.1.3 Removable Stop..... 25
2.3.1.4 Fasteners..... 25
2.3.1.5 Glazing Tape, Sealant and Setting Blocks..... 25
2.3.2 Attack Resistance..... 26
2.3.2.1 Forced Entry Resistance..... 26
2.3.2.2 Ballistic Resistance..... 26
2.3.2.3 Blast Resistance..... 27
2.3.3 Environmental Effects..... 27
2.4 Anchorage..... 27
2.4.1 Anchor Bolt Types..... 27
2.4.1.1 Taper Bolt..... 28
2.4.1.2 Expansion Sleeve Anchor..... 28
2.4.1.3 Embedded Anchor..... 28
2.5 Walls..... 29
2.5.1 Wood Frame..... 29
2.5.2 Unreinforced Brick..... 30
2.5.3 8-inch Reinforced Concrete Block..... 30
2.5.4 8-inch Reinforced Concrete..... 30
Section 3 AGGRESSOR THREATS AND TACTICS ..... 32
3.1 Introduction..... 32
3.2 Aggressor Characteristics..... 32
3.2.1 Aggressor Objectives..... 32
3.2.2 Aggressor Categories..... 32
3.2.2.1 Categories Not Addressed..... 33
3.3 Aggressor Tactics..... 33
3.3.1 Tactics Not Addressed..... 34
3.4 Tools, Weapons, and Explosives..... 34
Section 4 SYSTEM ANALYSIS ..... 35

4.1 Introduction..... 35
4.1.1 Objective..... 35
4.1.2 Application..... 35
4.1.3 Protective Layering..... 35
4.2 System Analysis Procedure..... 35
4.2.1 Required Information..... 35
4.3 System Selection Procedure..... 36
4.3.1 Required Information..... 36
4.4 System Evaluation Procedure..... 36
4.4.1 Required Information..... 39
4.5 Selection Attack Analyses Procedure..... 39
4.5.1 Required Information..... 39
4.6 Evaluation Attack Analyses Procedure..... 39
4.6.1 Required Information..... 42
4.7 Reconciliation for Selection Procedure..... 42
4.7.1 Required Information..... 44
4.8 Evaluation Reconciliation Procedure..... 44
4.8.1 Required Information..... 45
4.9 Requirements Revision Procedure..... 45
4.9.1 Required Information..... 45
Section 5 BALLISTIC RESISTANT GLAZING ..... 50
5.1 Introduction..... 50
5.2 Levels of Protection to Resist Ballistic Attack..... 50
5.3 Ballistic Resistant Glazing Evaluation Procedure..... 50
5.3.1 Required Information..... 53

5.4 Cross-Section Ballistic Resistant Thicknesses Procedure..... 53
5.4.1 Required Information..... 56
5.5 Ballistic Resistant Glazing Selection Procedure..... 57
5.5.1 Required Information..... 59
Section 6 BLAST RESISTANT GLAZING ..... 60
6.1 Introduction..... 60
6.2 Levels of Protection to Resist Bomb Attack... 60
6.2.1 Low Level of Protection..... 60
6.2.2 High Level of Protection..... 60
6.3 Frame, Anchorage and Wall Analysis..... 61
6.3.1 Frame Loads..... 61
6.3.1.1 Rebound..... 62
6.3.2 Anchorage Design..... 62
6.3.3 Wall Loads..... 62
6.4 Blast Resistant Glazing Evaluation Procedure. 62
6.4.1 Required Information..... 64
6.5 Blast Resistant Glazing Selection Procedure.. 65
6.5.1 Required Information..... 65
Section 7 FORCED ENTRY RESISTANT GLAZING ..... 68
7.1 Introduction..... 68
7.2 Levels of Protection to Resist Forced Entry Attack..... 68
7.2.1 Low Level of Protection..... 68
7.2.2 Medium Level of Protection..... 68
7.3 Forced Entry Resistant Glazing Selection Procedure..... 68
7.3.1 Required Information..... 69
7.4 Forced Entry Resistant Glazing Evaluation Procedure..... 74
7.4.1 Required Information..... 75
Section 8 ENVIRONMENTAL ANALYSIS ..... 78
8.1 Introduction..... 78
8.2 Environmental Analysis Procedure..... 78
8.2.1 Required Information..... 79
8.3 Polycarbonate Environmental Analysis Procedure..... 79
8.3.1 Required Information..... 79

8.4 Laminated Glass Environmental Analysis Procedure..... 81
8.4.1 Required Information..... 81
Section 9 COST ANALYSIS ..... 82
9.1 Introduction..... 82
9.2 Cost Estimate Procedure..... 82
9.2.1 Required Information..... 82
9.3 Cross-Section Cost Estimate Procedure..... 82
9.3.1 Required Information..... 82
9.4 Cross-Section Material Cost Estimate Procedure..... 84
9.4.1 Required Information..... 84
9.5 Cross-Section Fabrication Cost Estimate Procedure..... 87
9.5.1 Required Information..... 89
9.6 Frame Cost Estimate Procedure..... 89
9.6.1 Required Information..... 91
9.7 Installation Cost Estimate Procedure..... 91
9.7.1 Required Information..... 91
9.8 Initial Cost Estimate Procedure..... 92
9.8.1 Required Information..... 92

APPENDIXES

APPENDIX A PROCESS CHARTS ..... 95
A.1 Introduction..... 95
A.2 Informational Structure..... 95
A.2.1 Terminal Structure..... 95
A.2.2 Report Structure..... 95
A.3 Sequence Structure..... 96
A.3.1 Simple Sequence Structure..... 96
A.3.2 Procedural Structure..... 97
A.4 Selection Structure..... 98
A.4.1 Simple Selection Structure..... 98
A.4.2 Case Structure..... 99
A.5 Iteration Structure..... 99
A.5.1 Do While Structure..... 99
A.5.2 For Structure..... 99
APPENDIX B SECURITY GLAZING PLANNING AND ANALYSIS WORKSHEETS ..... 102
B.1 Introduction..... 102
B.2 Worksheet Summary..... 102
APPENDIX C SAFEVUE PROCEDURES ..... 121
C.1 Introduction..... 121
C.1.1 Safevue User’s Manual..... 121

C.1.2 Installation..... 121
C.2 Safevue Evaluation Analysis Procedure..... 121
C.2.1 Required Information..... 121
C.3 Data Preparation for Evaluation Analysis Procedure..... 123
C.3.1 Required Information..... 123
C.4 Glazing Data Preparation for Evaluation Analysis..... 123
C.4.1 Required Information..... 125
C.5 Explosives Data Preparation Procedure..... 126
C.5.1 Required Information..... 126
C.6 Algorithm Data Preparation Procedure..... 126
C.6.1 Required Information..... 127
C.7 Safevue Startup Procedure..... 128
C.7.1 Required Information..... 128
C.8 Data Entry Procedure..... 129
C.8.1 Required Information..... 130
C.9 Glazing Data Entry Procedure..... 130
C.9.1 Required Information..... 132
C.10 Explosives Data Entry Procedure..... 132
C.10.1 Required Information..... 134
C.11 Algorithm Data Entry Procedure..... 134
C.11.1 Required Information..... 135
C.12 Safevue Selection Analysis Procedure..... 135
C.12.1 Required Information..... 136
C.13 Data Preparation for Selection Analysis Procedure..... 136
C.13.1 Required Information..... 136
C.14 Glazing Data Preparation for Selection Analysis Procedure..... 139
C.14.1 Required Information..... 139
C.15 Plate Data Preparation Procedure..... 168
C.15.1 Required Information..... 168
C.16 Results Analysis Procedure..... 169
C.16.1 Required Information..... 170
C.16.2 Modifying a Cross-Section to Avoid Failure.. 171
C.16.3 Modifying a Cross-Section to Avoid Overdesign..... 171
APPENDIX D RISK ANALYSIS ..... 173
Section D-1 PLANNING ..... 173
D-1.1 Introduction..... 173
D-1.1.1 Objective..... 173
D-1.1.2 Priority..... 173
D-1.2 Planning Procedure..... 174
D-1.2.1 Required Information..... 175

D-1.2.2 Information Sensitivity..... 175
Section D-2 ASSETS ..... 177
D-2.1 Introduction..... 177
D-2.1.1 Asset Types..... 177
D-2.1.2 Asset Categories..... 177
D-2.2 Assets Procedure..... 177
D-2.2.1 Required Information..... 178
D-2.3 Asset Identification Procedure..... 180
D-2.3.1 Required Information..... 180
D-2.4 Primary Asset Value Assessment Procedure.... 180
D-2.4.1 Required Information..... 180
D-2.4.2 Relative Value for Sensitive Information and Controlled Cryptographic Items..... 183
D-2.4.3 Criticality to the Military’s Mission..... 184
D-2.4.4 Criticality to the User’s Mission..... 184
D-2.4.5 Asset Replaceability..... 185
D-2.4.6 Relative Asset Value..... 186
D-2.4.6.1 Relative Value for AA&E..... 186
D-2.4.6.2 Relative Value for Controlled Medical Substances and Other Medically Sensitive Items..... 187
D-2.4.6.3 Relative Value for Other Assets..... 188
D-2.4.6.4 Relative Value for People as Assets..... 189
D-2.5 Secondary Asset Value Assessment Procedure.. 190
D-2.5.1 Required Information..... 191
Section D-3 DESIGN BASIS THREAT ..... 193
D-3.1 Introduction..... 193
D-3.2 Design Basis Threat Procedure..... 193
D-3.2.1 Required Information..... 193

D-3.3 Identification of Likely Aggressors Procedure..... 194
D-3.3.1 Required Information..... 194
D-3.3.2 Identify Likely Aggressor..... 195
D-3.4 Likelihood of Aggression Procedure..... 198
D-3.4.1 Required Information..... 198
D-3.4.2 Asset Profile..... 200
D-3.4.3 Asset Usefulness to Aggressor..... 200
D-3.4.3.1 Usefulness for Assets with Cash Value..... 200
D-3.4.3.2 Usefulness for Assets with Direct Application to Aggressor's Goals..... 202
D-3.4.3.3 Usefulness for Assets with Publicity Value.. 203
D-3.4.4 Asset Availability..... 203
D-3.4.5 Local Incidents in the Past..... 204
D-3.4.6 Nearby Incidents in the Past..... 205
D-3.4.7 Potential for Future Incidents..... 206
D-3.4.8 Asset Accessibility..... 206
D-3.4.9 Effectiveness of Law Enforcement..... 210
D-3.4.10 Deterrence..... 211
D-3.4.11 Likelihood Rating..... 212
D-3.5 Applicable Tactics and Severity Levels Identification Procedure..... 213
D-3.5.1 Required Information..... 213
D-3.5.2 Identify Tactic Threat Severity Levels..... 213
D-3.5.3 Applicability of Indicated Threat Severity Levels..... 214
D-3.6 Tactics Consolidation Procedure..... 218
D-3.6.1 Required Information..... 218
Section D-4 LEVEL OF PROTECTION ..... 221
D-4.1 Introduction..... 221
D-4.2 Level of Protection Procedure..... 221
D-4.2.1 Required Information..... 221
D-4.3 Collateral Damage Assessment Procedure..... 223
D-4.3.1 Required Information..... 224
D-4.4 Collateral Damage Threat Severity Level Procedure..... 224
D-4.4.1 Required Information..... 224
Appendix E EXAMPLES ..... 230
E.1 Introduction..... 230
E.1.1 Action Tables..... 230
E.1.2 Repeat Action..... 230
E.2 Example Number 1: Assets Procudure..... 231
E.2.1 Background Information..... 231
E.2.1.1 Installation Characteristics..... 231
E.2.1.2 Facility Characteristics..... 231

E.3 Example Number 2: Design Basis Threat Procedure..... 240
E.3.1 Background Information..... 240
E.3.1.1 General..... 240
E.3.1.2 Communication Equipment..... 240
E.3.1.3 Office Equipment..... 240
E.3.1.4 High-Ranking Military Personnel..... 241
E.3.1.5 Administration Staff..... 242
E.3.1.6 Back Up Generator..... 243
E.4 Example Number 3: Level of Protection..... 252
E.5 Example Number 4: System Analysis..... 254
E.5.1 Background Information..... 254
E.5.1.1 Windows..... 254
E.5.1.2 Exterior Attack Tactic..... 254
E.5.1.3 Blast Design..... 254
E.5.1.4 Environment..... 255
E.5.1.5 Requirements..... 255
E.5.1.6 Cost Estimate..... 255
APPENDIX F CROSS-SECTIONS ..... 285
F.1 Introduction..... 285
F.2 Air-Gap..... 286
F.3 Extruded Ionomer..... 290
F.4 Glass-Clad Polycarbonate..... 291
F.5 Laminated Glass..... 300
F.6 Laminated Polycarbonate..... 302

FIGURES

Figure 1 Planning Procedures Organization ..... 8
Figure 2 Analysis Procedures Organization ..... 9
Figure 3 Safevue Procedures Organization ..... 10
Figure 4 Expansion Anchors ..... 29
Figure 5 Process Chart and Description: System Analysis Procedure ..... 36

Figure 6 Process Chart and Description: System Selection Procedure ..... 37
Figure 7 Process Chart and Description: System Evaluation Procedure ..... 38
Figure 8 Process Chart and Description: Selection Attack Analyses Procedure ..... 40
Figure 9 Process Chart and Description: Evaluation Attack Analyses Procedure ..... 41
Figure 10 Process Chart: Selection Reconciliation Procedure ..... 43
Figure 11 Procedure Description: Selection Reconciliation Procedure ..... 44
Figure 12 Process Chart: Evaluation Reconciliation Procedure ..... 46
Figure 13 Procedure Description: Evaluation Reconciliation Procedure ..... 47
Figure 14 Process Chart: Requirements Revision Procedure .. 48
Figure 15 Procedure Description: Requirements Revision Procedure ..... 49
Figure 16 Process Chart: Ballistic Resistant Glazing Evaluation Procedure ..... 51
Figure 17 Description: Ballistic Resistant Glazing Evaluation Procedure ..... 52
Figure 18 Process Chart: Cross-Section Ballistic Resistant Thicknesses Procedure ..... 54
Figure 19 Description: Cross-Section Ballistic Resistant Thicknesses Procedure ..... 55
Figure 20 Process Chart: Ballistic Resistant Glazing Selection Procedure ..... 58
Figure 21 Description: Ballistic Resistant Glazing Selection Procedure ..... 59
Figure 22 Process Chart: Blast Resistant Glazing Evaluation Procedure ..... 63
Figure 23 Description: Blast Resistant Glazing Evaluation Procedure ..... 64
Figure 24 Process Chart: Blast Resistant Glazing Selection Procedure ..... 66
Figure 25 Description: Blast Resistant Glazing Selection Procedure ..... 67

Figure 26 Process Chart: Forced Entry Resistant Glazing Selection Procedure ..... 70
Figure 27 Description: Forced Entry Resistant Glazing Selection Procedure ..... 71
Figure 28 Process Chart: Forced Entry Resistant Glazing Evaluation Procedure ..... 76
Figure 29 Description: Forced Entry Resistant Glazing Evaluation Procedure ..... 77
Figure 30 Process Chart: Environmental Analysis Procedure ..... 78
Figure 31 Description: Environmental Analysis Procedure ..... 79
Figure 32 Process Chart and Description: Polycarbonate Environmental Analysis Procedure ..... 80
Figure 33 Process Chart and Description: Laminated Glass Environmental Analysis Procedure ..... 81
Figure 34 Process Chart and Description: Cost Estimate Procedure ..... 83
Figure 35 Process Chart and Description: Cross-Section Cost Estimate Procedure ..... 84
Figure 36 Process Chart and Description: Cross-Section Material Cost Estimate Procedure ..... 84
Figure 37 Process Chart: Cross-Section Fabrication Cost Estimate Procedure ..... 88
Figure 38 Description: Cross-Section Cost Estimate Procedure ..... 89
Figure 39 Process Chart and Description: Frame Cost Estimate Procedure ..... 90
Figure 40 Process Chart and Description: Installation Cost Estimate Procedure ..... 93
Figure 41 Process Chart and Description: Initial Cost Estimate Procedure ..... 94
Figure A-1 Terminal Structure ..... 95
Figure A-2 Report Structure ..... 96
Figure A-3 Simple Sequence Structure ..... 97
Figure A-4 Procedural Structure ..... 98
Figure A-5 Simple Selection Structure ..... 99
Figure A-6 Case Structure ..... 100
Figure A-7 Do While Structure ..... 100
Figure A-8 For Structure ..... 101
Figure C-1 Process Chart and Description: Safevue Evaluation Analysis Procedure ..... 122
Figure C-2 Process Chart and Description: Data Preparation for Evaluation Analysis Procedure .. 124
Figure C-3 Process Chart and Description: Glazing Data

Preparation for Evaluation Analysis Procedure .. 125
Figure C-4 Process Chart and Description: Explosives Data Preparation Procedure ..... 127
Figure C-5 Process Chart and Description: Algorithm Data Preparation Procedure ..... 128
Figure C-6 Process Chart and Description: Safevue Startup Procedure ..... 129
Figure C-7 Process Chart and Description: Data Entry Procedure ..... 130
Figure C-8 Process Chart: Glazing Data Entry Procedure ... 131
Figure C-9 Description: Glazing Data Entry Procedure ..... 132
Figure C-10 Process Chart and Description: Explosives Data Entry Procedure ..... 133
Figure C-11 Spatial Orientation of Coordinates ..... 134
Figure C-12 Process Chart and Description: Algorithm Data Entry Procedure ..... 135
Figure C-13 Process Chart: Safevue Selection Analysis Procedure ..... 137
Figure C-14 Description: Safevue Selection Analysis Procedure ..... 138
Figure C-15 Process Chart and Description: Data Preparation for Selection Analysis Procedure ... 139
Figure C-16 Process Chart: Glazing Data Preparation for Selection Analysis Procedure ..... 140
Figure C-17 Description: Glazing Data Preparation for Selection Analysis Procedure ..... 141
Figure C-18 Process Chart and Description: Plate Data Preparation Procedure ..... 169
Figure C-19 Process Chart and Description: Results Analysis Procedure ..... 170
Figure D-1 Design Criteria ..... 174
Figure D-2 Process Chart and Description: Planning Procedure ..... 175
Figure D-3 Process Chart: Assets Procedure ..... 179
Figure D-4 Description: Assets Procedure ..... 179
Figure D-5 Process Chart and Description: Asset Identification Procedure ..... 181
Figure D-6 Process Chart: Primary Asset Value Assessment Procedure ..... 182
Figure D-7 Description: Primary Asset Value Assessment Procedure ..... 183
Figure D-8 Process Chart and Description: Secondary Asset Value Assessment Procedure ..... 191
Figure D-9 Process Chart and Description: Design Basis Threat Procedure ..... 194

Figure D-10 Process Chart and Description: Identification of Likely Aggressors Procedure ..... 195
Figure D-11 Potential Aggressors Selection Table ..... 197
Figure D-12 Process Chart: Likelihood of Aggression ..... 199
Figure D-13 Usefulness of Assets with Cash Value ..... 202
Figure D-14 Process Chart: Applicable Tactics and Severity Levels Identification Procedure ..... 215
Figure D-15 Description: Applicable Tactics and Severity Levels Identification Procedure ..... 216
Figure D-16 Potential Tactic Selection Table ..... 217
Figure D-17 Threat Severity Levels for Tactics ..... 218
Figure D-18 Process Chart and Description: Tactics Consolidation Procedure ..... 219
Figure D-19 Process Chart: Level of Protection Procedure .. 222
Figure D-20 Description: Level of Protection Procedure .... 223
Figure D-21 Process Chart: Collateral Damage Assessment Procedure ..... 225
Figure D-22 Description: Collateral Damage Assessment Procedure ..... 226
Figure D-23 Process Chart: Collateral Damage Threat Severity Level ..... 228
Figure D-24 Description: Collateral Damage Threat Severity Level ..... 229
Figure E-1 DCS Worksheet for Example Number 1 ..... 234
Figure E-2 AVAL Worksheet for Communications Equipment .... 235
Figure E-3 AVAL Worksheet for Office Equipment ..... 236
Figure E-4 AVAL Worksheet for High-Ranking Military Personnel ..... 237
Figure E-5 AVAL Worksheet for Administration Staff ..... 238
Figure E-6 AVAL Worksheet for Back Up Generator ..... 239
Figure E-7 TTSL Worksheet for Communications Equipment .... 246
Figure E-8 DCS Worksheet for Example Number 2 ..... 247
Figure E-9 TTSL Worksheet for Office Equipment ..... 248
Figure E-10 TTSL Worksheet for High-Ranking Military Personnel ..... 249
Figure E-11 TTSL Worksheet for Administration Staff ..... 250
Figure E-12 TTSL Worksheet for Back Up Generator ..... 251
Figure E-13 DCS Worksheet for Example Number 3 ..... 253
Figure E-14 CSS Worksheet Before Revising Requirements ..... 258
Figure E-15 FS Worksheet Before Revising Requirements ..... 259
Figure E-16 WS Worksheet Before Revising Requirements ..... 260
Figure E-17 SDE Worksheet ..... 261
Figure E-18 SA Worksheet for Laminated Glass ..... 263
Figure E-19 SA Worksheet for Laminated Polycarbonate ..... 267
Figure E-20 SA Worksheet for Glass-Clad Polycarbonate ..... 268

Figure E-21 SA Worksheet for Air-Gap with Polycarbonate .... 269
Figure E-22 AS Worksheet Before Revising Requirements ..... 271
Figure E-23 CSS Worksheet After Revising Requirements ..... 273
Figure E-24 FS Worksheet After Revising Requirements ..... 274
Figure E-25 AS Worksheet After Revising Requirements ..... 275
Figure E-26 WS Worksheet After Revising Requirements ..... 276
Figure E-27 CSCF Worksheet for Glass-Clad Polycarbonate .... 277
Figure E-28 FCF Worksheet ..... 279
Figure E-29 Installation Cost Worksheet ..... 281
Figure E-30 Initial Cost Worksheet ..... 282
Figure E-31 CSCF Worksheet for Laminated Polycarbonate ..... 283
Figure E-32 CSCF Worksheet for Air-Gap with Polycarbonate .. 284
Figure F-1 Cross-Section Material Legend ..... 286
Figure F-2 7/8-inch Air-Gap ..... 287
Figure F-3 1-inch Air-Gap ..... 287
Figure F-4 1-1/4-inch Air-Gap ..... 288
Figure F-5 1-1/4-inch Air-Gap ..... 288
Figure F-6 1-3/4-inch Air-Gap ..... 289
Figure F-7 1-15/16-inch Air-Gap ..... 289
Figure F-8 13/16-inch Extruded Ionomer ..... 290
Figure F-9 2-1/8-inch Extruded Ionomer ..... 291
Figure F-10 9/16-inch Glass-Clad Polycarbonate ..... 292
Figure F-11 5/8-inch Glass-Clad Polycarbonate ..... 292
Figure F-12 11/16-inch Glass-Clad Polycarbonate ..... 293
Figure F-13 13/16-inch Glass-Clad Polycarbonate ..... 293
Figure F-14 15/16-inch Glass-Clad Polycarbonate ..... 294
Figure F-15 1-inch Glass-Clad Polycarbonate ..... 294
Figure F-16 1-3/16-inch Glass-Clad Polycarbonate ..... 295
Figure F-17 1-3/16-inch Glass-Clad Polycarbonate ..... 295
Figure F-18 1-3/16-inch Glass-Clad Polycarbonate ..... 296
Figure F-19 1-1/4-inch Glass-Clad Polycarbonate ..... 296
Figure F-20 1-5/16-inch Glass-Clad Polycarbonate ..... 297
Figure F-21 1-3/8-inch Glass-Clad Polycarbonate ..... 297
Figure F-22 1-3/8-inch Glass-Clad Polycarbonate ..... 298
Figure F-23 1-1/2-inch Glass-Clad Polycarbonate ..... 298
Figure F-24 1-5/8-inch Glass-Clad Polycarbonate ..... 299
Figure F-25 2-1/16-inch Glass-Clad Polycarbonate ..... 299
Figure F-26 2-1/16-inch Glass-Clad Polycarbonate ..... 300
Figure F-27 1-3/16-inch Laminated Glass ..... 301
Figure F-28 1-3/4-inch Laminated Glass ..... 301
Figure F-29 2-inch Laminated Glass ..... 302
Figure F-30 1-inch Laminated Polycarbonate ..... 303
Figure F-31 1-1/4-inch Laminated Polycarbonate ..... 303

TABLES

Table 1 Wall Construction ..... 31
Table 2 Aggressor Categories and Groups ..... 33
Table 3 Tools, Weapons and Explosives ..... 34
Table 4 Ballistic Attack Protective Measures Summary .... 50
Table 5 Ballistic Tactic Threat Severity Level Standards ..... 52
Table 6 Minimum Thicknesses for Ballistic Resistant Frames ..... 53
Table 7 Minimum Thicknesses for Ballistic Resistant Walls ..... 53
Table 8 Typical Thicknesses for Low Threat Severity Level Ballistic Resistant Glazing Cross-Sections ..... 55
Table 9 Typical Thicknesses for Medium Threat Severity Level Ballistic Resistant Glazing Cross-Sections ..... 56
Table 10 Typical Thicknesses for High Threat Severity Level Ballistic Resistant Glazing Cross-Sections ..... 56
Table 11 Typical Thicknesses for Very High Threat Severity Level Ballistic Resistant Glazing Cross-Sections ..... 57
Table 12 Protective Measures to Resist Bomb Attack ..... 60
Table 13 Protective Measures to Resist Forced Entry Attack ..... 69
Table 14 Minimum Glazing Specifications for Low Threat Severity Level ..... 72
Table 15 Minimum Frame Specifications for Low Threat Severity Level ..... 72
Table 16 Minimum Anchorage Size for Low Threat Severity Level ..... 72
Table 17 Lag Bolt Maximum Spacing for Low Threat Severity Level ..... 72
Table 18 Removable Stop Anchorage Size for Low Threat Severity Level ..... 72
Table 19 Removable Stop Bolt Maximum Spacing for Low Threat Severity Level ..... 73
Table 20 Minimum Wall Thicknesses for Low Threat Severity Level ..... 72
Table 21 Minimum Glazing Specifications for Medium Threat Severity Level ..... 73
Table 22 Minimum Frame Specification for Medium Threat Severity Level ..... 73
Table 23 Minimum Anchorage Size for Medium Threat

Severity Level ..... 73
Table 24 Concrete Anchor Bolt Maximum Spacing for Medium Threat Severity Level ..... 74
Table 25 Removable Stop Anchorage Size for Medium Threat Severity Level ..... 74
Table 26 Removable Stop Bolt Spacing for Medium Threat Severity Level ..... 74
Table 27 Minimum Wall Thicknesses for Medium Threat Severity Level ..... 74
Table 28 Cross-Section Cost Factor Table Selection ..... 86
Table 29 Glass Cost Factors and Weight per Unit Area (English Units) ..... 86
Table 30 Glass Cost Factors and Weight per Unit Area (Metric Units) ..... 86

Table 31 Polycarbonate Cost Factors and Weight per Unit Area (English Units) ..... 86
Table 32 Polycarbonate Cost Factors and Weight per Unit Area (Metric Units) ..... 87
Table 33 PVB Interlayer Cost Factors per Unit Area ..... 87
Table 34 Urethane Interlayer Cost Factors per Unit Area ..... 87
Table 35 Frame Type Cost Factors ..... 91
Table C-1 Minimum Thickness Table Selection for Thermally Tempered Glass ..... 141
Table C-2 Minimum Thickness Table Selection for Polycarbonate ..... 142
Table C-3 Minimum Thickness of Thermally Tempered Glass (in.) to Survive Incident Overpressure from 50-lb TNT, Aspect Ratio, a/b = 1.0 ..... 142
Table C-4 Minimum Thickness of Thermally Tempered Glass (mm) to Survive Incident Overpressure from 23-kg TNT, Aspect Ratio, a/b = 1.0 ..... 142
Table C-5 Minimum Thickness of Thermally Tempered Glass (in.) to Survive Incident Overpressure from 220-lb TNT, Aspect Ratio, a/b = 1.0 ..... 143
Table C-6 Minimum Thickness of Thermally Tempered Glass (mm) to Survive Incident Overpressure from 100-kg TNT, Aspect Ratio, a/b = 1.0 ..... 143
Table C-7 Minimum Thickness of Thermally Tempered Glass (in.) to Survive Incident Overpressure from 500-lb TNT, Aspect Ratio, a/b = 1.0 ..... 144
Table C-8 Minimum Thickness of Thermally Tempered Glass (mm) to Survive Incident Overpressure from 230-kg TNT, Aspect Ratio, a/b = 1.0 ..... 144
Table C-9 Minimum Thickness of Thermally Tempered Glass (in.) to Survive Incident Overpressure from 1000-lb TNT, Aspect Ratio, a/b = 1.0 ..... 145
Table C-10 Minimum Thickness of Thermally Tempered Glass (mm) to Survive Incident Overpressure from 460-kg TNT, Aspect Ratio, a/b = 1.0 ..... 146
Table C-11 Minimum Thickness of Thermally Tempered Glass (in.) to Survive Incident Overpressure from 50-lb TNT, Aspect Ratio, a/b = 1.5 ..... 146

Table C-12 Minimum Thickness of Thermally Tempered Glass (mm) to Survive Incident Overpressure from 23-kg TNT, Aspect Ratio, a/b = 1.5 ..... 147
Table C-13 Minimum Thickness of Thermally Tempered Glass (in.) to Survive Incident Overpressure from 220-lb TNT, Aspect Ratio, a/b = 1.5 ..... 147
Table C-14 Minimum Thickness of Thermally Tempered Glass (mm) to Survive Incident Overpressure from 100-kg TNT, Aspect Ratio, a/b = 1.5 ..... 148
Table C-15 Minimum Thickness of Thermally Tempered Glass (in.) to Survive Incident Overpressure from 500-lb TNT, Aspect Ratio, a/b = 1.5 ..... 148
Table C-16 Minimum Thickness of Thermally Tempered Glass (mm) to Survive Incident Overpressure from 230-kg TNT, Aspect Ratio, a/b = 1.5 ..... 149
Table C-17 Minimum Thickness of Thermally Tempered Glass (in.) to Survive Incident Overpressure from 1000-lb TNT, Aspect Ratio, a/b = 1.5 ..... 149
Table C-18 Minimum Thickness of Thermally Tempered Glass (mm) to Survive Incident Overpressure from 460-kg TNT, Aspect Ratio, a/b = 1.5 ..... 150
Table C-19 Minimum Thickness of Thermally Tempered Glass (in.) to Survive Incident Overpressure from 50-lb TNT, Aspect Ratio, a/b = 2.0 ..... 150
Table C-20 Minimum Thickness of Thermally Tempered Glass (mm) to Survive Incident Overpressure from 23-kg TNT, Aspect Ratio, a/b = 2.0 ..... 151
Table C-21 Minimum Thickness of Thermally Tempered Glass (in.) to Survive Incident Overpressure from 220-lb TNT, Aspect Ratio, a/b = 2.0 ..... 151
Table C-22 Minimum Thickness of Thermally Tempered Glass (mm) to Survive Incident Overpressure from 100-kg TNT, Aspect Ratio, a/b = 2.0 ..... 151
Table C-23 Minimum Thickness of Thermally Tempered Glass (in.) to Survive Incident Overpressure from 500-lb TNT, Aspect Ratio, a/b = 2.0 ..... 152
Table C-24 Minimum Thickness of Thermally Tempered Glass (mm) to Survive Incident Overpressure from 230-kg TNT, Aspect Ratio, a/b = 2.0 ..... 152

Table C-25 Minimum Thickness of Thermally Tempered Glass (in.) to Survive Incident Overpressure from 1000-lb TNT, Aspect Ratio, a/b = 2.0 ..... 151
Table C-26 Minimum Thickness of Thermally Tempered Glass (mm) to Survive Incident Overpressure from 460-kg TNT, Aspect Ratio, a/b = 2.0 ..... 153
Table C-27 Minimum Thickness of Thermally Tempered Glass (in.) to Survive Incident Overpressure from 50-lb TNT, Aspect Ratio, a/b = 3.0 ..... 152
Table C-28 Minimum Thickness of Thermally Tempered Glass (mm) to Survive Incident Overpressure from 23-kg TNT, Aspect Ratio, a/b = 3.0 ..... 154
Table C-29 Minimum Thickness of Thermally Tempered Glass (in.) to Survive Incident Overpressure from 220-lb TNT, Aspect Ratio, a/b = 3.0 ..... 154
Table C-30 Minimum Thickness of Thermally Tempered Glass (mm) to Survive Incident Overpressure from 100-kg TNT, Aspect Ratio, a/b = 3.0 ..... 153
Table C-31 Minimum Thickness of Thermally Tempered Glass (in.) to Survive Incident Overpressure from 500-lb TNT, Aspect Ratio, a/b = 3.0 ..... 155
Table C-32 Minimum Thickness of Thermally Tempered Glass (mm) to Survive Incident Overpressure from 230-kg TNT, Aspect Ratio, a/b = 3.0 ..... 155
Table C-33 Minimum Thickness of Thermally Tempered Glass (in.) to Survive Incident Overpressure from 1000-lb TNT, Aspect Ratio, a/b = 3.0 ..... 154
Table C-34 Minimum Thickness of Thermally Tempered Glass (mm) to Survive Incident Overpressure from 460-kg TNT, Aspect Ratio, a/b = 3.0 ..... 156
Table C-35 Minimum Thickness of Polycarbonate (in.) to Survive Incident Overpressure from 50-lb (23-kg) TNT, Aspect Ratio, a/b = 1.0 ..... 157
Table C-36 Minimum Thickness of Polycarbonate (in.) to Survive Incident Overpressure from 220-lb (100-kg) TNT, Aspect Ratio, a/b = 1.0 ..... 158
Table C-37 Minimum Thickness of Polycarbonate (in.) to Survive Incident Overpressure from 500-lb (230-kg) TNT, Aspect Ratio, a/b = 1.0 ..... 159

Table C-38 Minimum Thickness of Polycarbonate (in.) to Survive Incident Overpressure from 1000-lb (460-kg) TNT, Aspect Ratio, a/b = 1.0 ..... 160
Table C-39 Minimum Thickness of Polycarbonate (in.) to Survive Incident Overpressure from 50-lb (23-kg) TNT, Aspect Ratio, a/b = 1.5 ..... 161
Table C-40 Minimum Thickness of Polycarbonate (in.) to Survive Incident Overpressure from 220-lb (100-kg) TNT, Aspect Ratio, a/b = 1.5 ..... 160
Table C-41 Minimum Thickness of Polycarbonate (in.) to Survive Incident Overpressure from 500-lb (230-kg) TNT, Aspect Ratio, a/b = 1.5 ..... 161
Table C-42 Minimum Thickness of Polycarbonate (in.) to Survive Incident Overpressure from 1000-lb (460-kg) TNT, Aspect Ratio, a/b = 1.5 ..... 162
Table C-43 Minimum Thickness of Polycarbonate (in.) to Survive Incident Overpressure from 50-lb (23-kg) TNT, Aspect Ratio, a/b = 2.0 ..... 163
Table C-44 Minimum Thickness of Polycarbonate (in.) to Survive Incident Overpressure from 220-lb (100-kg) TNT, Aspect Ratio, a/b = 2.0 ..... 165
Table C-45 Minimum Thickness of Polycarbonate (in.) to Survive Incident Overpressure from 500-lb (230-kg) TNT, Aspect Ratio, a/b = 2.0 ..... 166
Table C-46 Minimum Thickness of Polycarbonate (in.) to Survive Incident Overpressure from 1000-lb (460-kg) TNT, Aspect Ratio, a/b = 2.0 ..... 166
Table C-47 Minimum Thickness of Polycarbonate (in.) to Survive Incident Overpressure from 50-lb (23-kg) TNT, Aspect Ratio, a/b = 3.0 ..... 167
Table C-48 Minimum Thickness of Polycarbonate (in.) to Survive Incident Overpressure from 220-lb (100-kg) TNT, Aspect Ratio, a/b = 3.0 ..... 167
Table C-49 Minimum Thickness of Polycarbonate (in.) to Survive Incident Overpressure from 500-lb (230-kg) TNT, Aspect Ratio, a/b = 3.0 ..... 168
Table C-50 Minimum Thickness of Polycarbonate (in.) to Survive Incident Overpressure from 1000-lb (460-kg) TNT, Aspect Ratio, a/b = 3.0 ..... 168
Table D-1 Asset Categories ..... 178
Table D-2 Relative Value for Sensitive Information and Controlled Cryptographic Items ..... 184
Table D-3 Criticality to the Military's Mission ..... 184
Table D-4 Criticality to the User's Mission ..... 185
Table D-5 Asset Replaceability ..... 186

Table D-6 Relative Asset Value Table Applicability ..... 187
Table D-7 Relative Value for AA&E ..... 187
Table D-8 Relative Value for Controlled Medical Substances and Other Medically Sensitive Items ..... 188
Table D-9 Relative Value for Other Assets ..... 189
Table D-10 Relative Value for People as Assets ..... 190
Table D-11 Asset Value Rating ..... 190
Table D-12 Secondary Asset Impact ..... 192
Table D-13 Secondary Asset Value Rating ..... 192
Table D-14 Asset Profile ..... 200
Table D-15 Asset Usefulness to Aggressor Factor Applicability Table ..... 201
Table D-16 Level of Usefulness to Aggressor ..... 203
Table D-17 Usefulness for Assets with Publicity Value ..... 204
Table D-18 Asset Availability ..... 204
Table D-19 Local Incidents in the Past ..... 205
Table D-20 Nearby Incidents in the Past ..... 206
Table D-21 Potential for Future Incidents ..... 207
Table D-22 Asset Accessibility Factor Applicability Table ..... 208
Table D-23 Accessibility of Bulk Storage of AA&E ..... 209
Table D-24 Accessibility of Unit Level Storage of AA&E .... 209
Table D-25 Accessibility of Other Assets Stored Inside Facilities ..... 210
Table D-26 Accessibility of Assets Subject to Destruction, Death, or Injury ..... 210
Table D-27 Effectiveness of Law Enforcement ..... 211
Table D-28 Deterrence for Assets Stored Inside Facilities ..... 212
Table D-29 Likelihood Rating ..... 213
Table D-30 Threat Parameters ..... 220
Table D-31 Levels of Protection Selection ..... 223
Table D-32 Asset Categories with Collateral Damage Potential ..... 226
Table D-33 Explosive Arc Radii for Collateral Damage (ft) Levels of Protection ..... 229
Table E-1 Description of Primary Assets ..... 232
Table E-2 Actions for Example Number 1 ..... 231
Table E-3 Actions for Example Number 2 ..... 243
Table E-4 Actions for Example Number 2, Continued ..... 244
Table E-5 Actions for Example Number 3 ..... 252
Table E-6 Blast Design Properties and Results ..... 253
Table E-7 Cost Data ..... 254
Table E-8 Actions for Example Number 4 ..... 257

Table E-9 Actions for Example Number 4, Continued ..... 262
Table E-10 Actions for Example Number 4, Continued ..... 264
Table E-11 Actions for Example Number 4, Continued ..... 265
Table E-12 Actions for Example Number 4, Continued ..... 266
Table E-13 Actions for Example Number 4, Continued ..... 270
Table E-14 Actions for Example Number 4, Continued ..... 272
Table E-15 Actions for Example Number 4, Continued ..... 278
Table E-16 Actions for Example Number 4, Continued ..... 280

BIBLIOGRAPHY ..... 304
REFERENCES ..... 305
GLOSSARY ..... 308
INDEX ..... 314

# SECTION 1: INTRODUCTION

1.1 Purpose and Scope. This handbook is to be used during the engineering design of Department of Defense (DOD) facilities to ensure that engineers and security personnel select the appropriate glazing systems to optimize performance and cost. The guidelines are based on the best currently available research and test data, and will be revised or expanded as additional research results and funding become available. The contents include procedures for planning and selecting glazing systems for new facilities as well as evaluating existing facilities.

The focus of this handbook is on balancing cost, protection, and design constraints in selecting systems to protect against ballistic, bomb, and forced entry tactics. Glazing provides an alternative to bars and grills in security applications that require protection against ballistic and bomb attacks in addition to forced entry attack.

In a work environment, windows are typically used to augment lighting and ventilation. Thus, they are more common in buildings with high concentrations of people than in facilities for storing materials or housing equipment. This handbook assumes that designers will avoid windows in secure facilities where they are not a necessity for personnel because it is cost-effective to do so.

1.2 Handbook Subject Matter. This handbook is divided into two major parts and six appendixes. The introductory material is presented in Sections 1 through 3. The analysis is covered in Sections 4 through 9. The appendixes contain information and procedures that supplement the major parts of the handbook. The content of each major part is summarized below.

1.2.1 Introductory Material. These sections of the handbook describe how to use the document, introduce glazing cross-sections, frames and other components, and present aggressor threats and tactics. The content of each introductory section is summarized below.

1.2.1.1 Introduction. This is Section 1 of the handbook. It covers purpose and scope, describes the subject matter, and explains how to use procedures.

1.2.1.2 Glazing System Overview. This is Section 2 of the handbook. It describes the various types of cross-sections, frames, and anchorage used in security glazing systems.

1.2.1.3 Aggressor Threats and Tactics. This is Section 3 of the handbook. It provides an introduction to aggressor characteristics; tactics; and tools, weapons, and explosives.

1.2.2 Analysis. These sections of the handbook provide a series of analysis procedures for selecting glazing components. The procedures address ballistic, bomb, and forced entry tactics, environmental concerns, and cost. The content of each analysis section is summarized below.

1.2.2.1 System Analysis. This is Section 4 of the handbook. It introduces the selection process and presents the process as a summary procedure.

1.2.2.2 Ballistic Resistant Glazing. This is Section 5 of the handbook. It covers analysis and selection of glazing components to protect against the ballistic tactic. The section includes analyses for selection of new construction and evaluation of existing facilities.

1.2.2.3 Blast Resistant Glazing. This is Section 6 of the handbook. It focuses on analysis of glazing components to protect against vehicle and exterior bomb tactics. The section uses the computer program Safevue as a tool in the analysis procedures. It includes analyses for selection of new construction and evaluation of existing facilities.

1.2.2.4 Forced Entry Resistant Glazing. This is Section 7 of the handbook. It addresses analysis and selection of glazing components to protect against the forced entry tactic. The section includes analyses for selection of new construction and evaluation of existing facilities.

1.2.2.5 Environmental Analysis. This is Section 8 of the handbook. It provides a list of environmental concerns that require evaluation before final selection of glazing components.

1.2.2.6 Cost Analysis. This is Section 9 of the handbook. It includes cost analyses for various types of glazing cross-section materials and frame types.

1.2.3 Appendixes. The appendixes provide an introduction to process charts, design worksheets, procedures for using the computer program Safevue, procedures for planning and risk analysis, example analyses, and cross-section illustrations. The content of each appendix is summarized below.

1.2.3.1 Process Charts. This is Appendix A of the handbook. It introduces process chart structures.

1.2.3.2 Security Glazing Planning and Analysis Worksheets. This is Appendix B of the handbook. It contains worksheets for use with selection and risk analysis procedures.

1.2.3.3 Safevue Procedures. This is Appendix C of the handbook. It provides procedures for using the computer program Safevue to analyze glazing systems subjected to blast overpressure.

1.2.3.4 Risk Analysis. This is Appendix D of the handbook. It provides a basis for defining the glazing system design criteria at the start of a project for efficient and cost-effective integration into the total design. The criteria describe assets associated with a facility, the threat to the assets, and the level to which the assets are to be protected against the threat. The appendix consists of four sections:

a) Planning: Provides an overview of the risk analysis process and presents the process as a summary procedure.
b) Assets: Addresses identifying and categorizing assets and assessing asset value. This section establishes which assets are to be protected.
c) Design Basis Threat: Defines threats, identifies likely aggressors, assesses likelihood of aggression, identifies applicable tactics and threat severity levels, and consolidates tactics into design basis threat.
d) Level of Protection: Assigns a level of protection to each asset for each applicable tactic.

This appendix is based on Army TM 5-853-1, Security Engineering Project Development. It will be removed from later releases of this handbook after a comprehensive risk analysis section is added to MIL-HDBK-1013/1A, Design Guidelines for Physical Security of Facilities .

1.2.3.5 Examples. This is Appendix E of the handbook. It helps clarify the use of procedures and worksheets in selecting and evaluating glazing systems.

1.2.3.6 Cross-Sections. This is Appendix F of the handbook. It provides illustrations of the recommended cross-sections.

1.3 Using the Handbook. This handbook is based on a series of procedures. These procedures assist in analyzing and selecting glazing systems. The procedures are presented as process charts and descriptive text. The following paragraphs explain how to use the process charts and the procedures they illustrate.

1.3.1 Procedures. The planning for and selection of security glazing systems require a systematic approach to ensure a cost-effective, usable, and useful product. The procedures presented in this handbook provide the needed systematic approach, and when followed, will result in a satisfactory solution to a complex problem involving environmental concerns, cost constraints, and multiple threats.

In general, each procedure is divided into three parts: required information, descriptive text, and process charts. The following paragraphs describe these three parts.

1.3.1.1 Required Information. Each process chart is accompanied by a list of information that an analyst will likely need to complete an evaluation or selection. Required information falls into two categories:

a) Information that can be gleaned from procedures in this document. This information is noted by a reference to the appropriate procedure.
b) Information that must be obtained from other sources (e.g., number and size of windows; asset type, criticality, and value; and availability of security force).

It is the responsibility of the analyst to locate or determine all required information for a procedure.

Included in the list of required information for each procedure is an inventory of worksheets that the analyst will be updating. All worksheets are presented in Appendix B.

1.3.1.2 Descriptive Text. Each process chart is accompanied by text either to the right of the chart in the same figure, or if the chart fills a page, the text is in a separate figure. The text references each structure in the process chart through a structure number. The structure number is formatted as <#>, where the pound sign represents a numerical value. The text of the structure is repeated in bold-face after the structure number. Following the structure text is an explanation of how to execute the structure. The descriptive text for each structure either concludes with the structure number of the next step to be executed, or for the last structure in a process, with the name and figure of the parent procedure.

1.3.1.3 Process Charts. Process charts break down and simplify complex tasks. For this reason, they are used extensively in the planning and analysis parts of this handbook. To take full advantage of the charts, become familiar with the chart structures, have the required information on hand before beginning a procedure, and refer to the descriptive text for clarification of actions, decisions, and information.

Appendix A provides detailed descriptions of all the structures used in the process charts. Refer to Appendix A for assistance in interpreting and applying process charts.

1.3.2 The User. The user of this handbook is generically referred to as the “analyst.” In reality, the analyst may be an engineer, security specialist or a design team. Refer to MIL-HDBK-1013/1A for a description of a facility design team.

1.3.3 Organization of Procedures. To aid in locating and using the procedures, Figure 1, Figure 2, and Figure 3 present organizational charts of the planning, analysis, and Safevue procedures, respectively. Each box in Figure 1 and Figure 2 lists the name, section number, and figure number of a procedure. All of the procedures shown in Figure 3 are taken from Appendix C.

1.4 Related Technical Documents. Use this handbook to address specific design problems relative to security glazing. Related technical documents are identified appropriately within the text.

1.5 Related Instructions. Six Department of the Navy instructions govern protection of windows.

a) OPNAVINST 3300.54, Protection of Navy Personnel and Activities Against Acts of Terrorism
b) OPNAVINST 5510.1H, Information and Personnel Security Program Regulation
c) OPNAVINST 5530.13B, Physical Security Instruction for Conventional Arms, Ammunition, and Explosives
d) OPNAVINST 5530.14B, Physical Security and Loss Prevention
e) OPNAVINST 5530.15, Physical Security Program
f) OPNAVINST C8126.1A, Navy Nuclear Weapon Security Manual

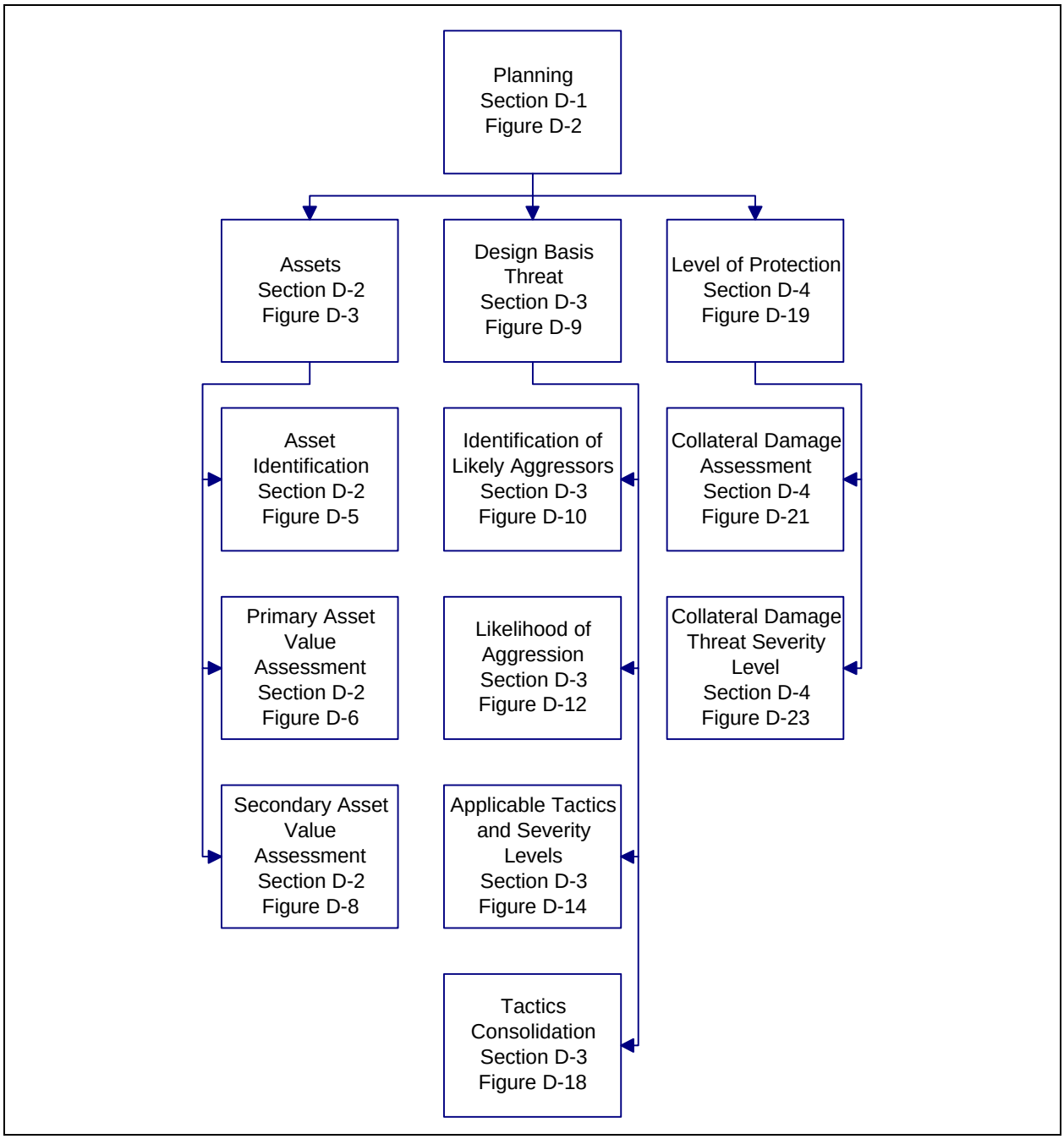


**Figure 1**
Planning Procedures Organization

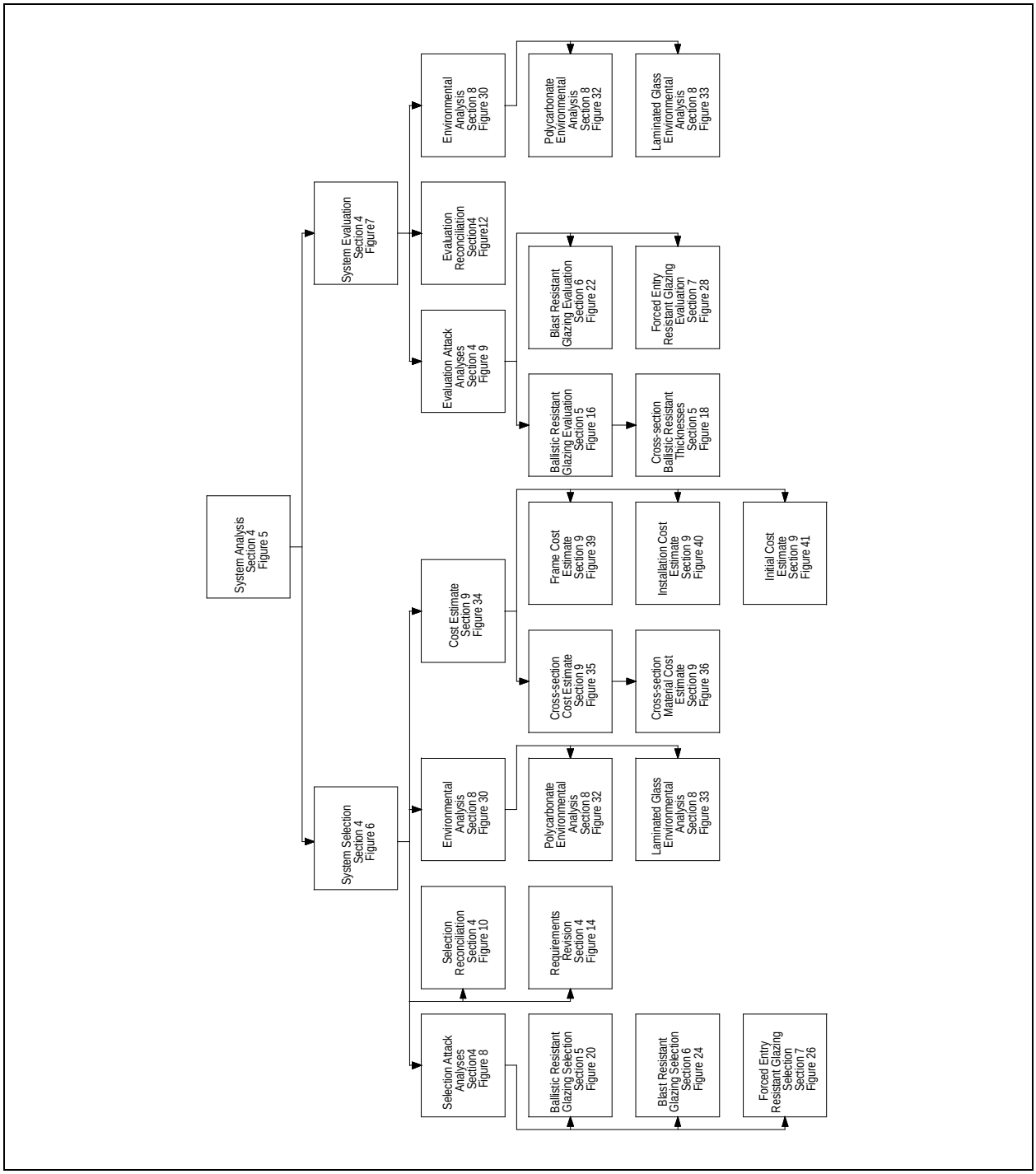


**Figure 2**
Analysis Procedures Organization

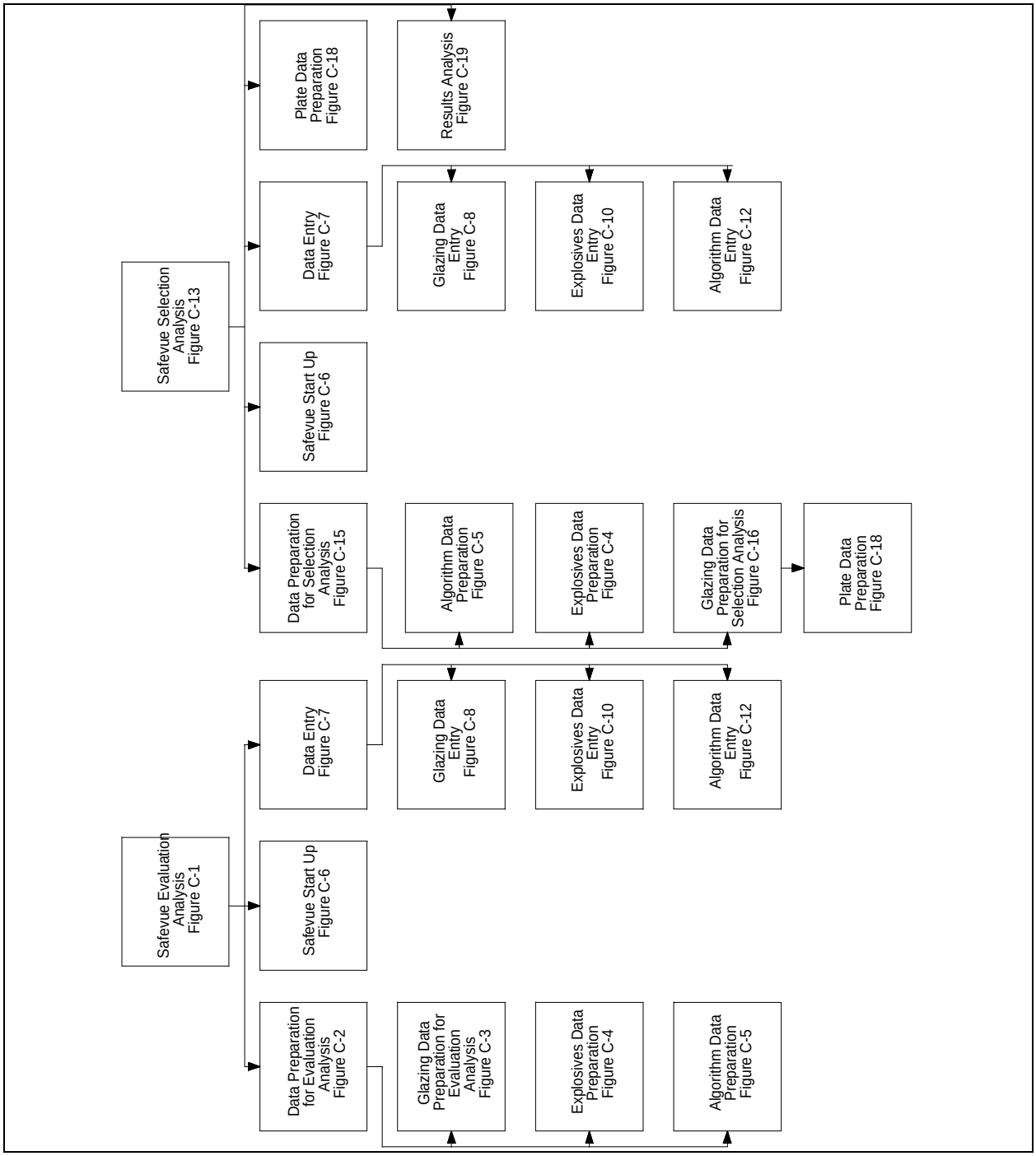


**Figure 3**
Safevue Procedures Organization

This paragraph summarizes the application of these instructions for glazing. Refer to the specific instructions for detailed requirements.

1.5.1 OPNAVINST 3300.54. This instruction provides information and suggestions for reducing risk and vulnerability of personnel and dependents, facilities, and material to acts of terrorism. Commanders should consider suggested protective measures when addressing responsibilities assigned in OPNAVINST 3300.53, Combating Terrorism Program.

1.5.2 OPNAVINST 5510.1H. This instruction provides policy, guidance, and standards for the protection of information. It specifies the use of heavy grills, screens, or bars to protect windows.

1.5.3 OPNAVINST 5530.13B. This instruction provides policy, guidance, and standards for the protection of arms, ammunition, and explosives (AA&E). It specifies that windows will provide protection comparable to protection provided by adjacent walls.

1.5.4 OPNAVINST 5530.14B. This instruction provides policy, guidance, and standards for the protection of personnel and material at Navy and Marine Corps shore installations and activities. It specifies the use of wire mesh to protect windows which penetrate a restricted area perimeter barrier.

1.5.5 OPNAVINST 5530.15. This instruction establishes basic physical security systems requirements for different categories of Navy assets. It sets priorities among physical security threats that must be met and assets that must be protected.

1.5.6 OPNAVINST C8126.1A. This instruction provides policy, guidance, and standards for the protection of Navy nuclear weapons. It specifies that windows will provide protection comparable to protection provided by adjacent walls.

# SECTION 2: GLAZING SYSTEM OVERVIEW

2.1 Introduction. A glazing system consists of four components:

a) glazing cross-section
b) frame
c) anchorage
d) wall

This section examines each of these components and describes the materials and design considerations for each.

2.2 Glazing Cross-Sections. All security glazing cross-sections should be fixed to maximize their effectiveness. Movable glazings can leave assets and personnel vulnerable to bomb, ballistic, or forced entry attack.

For cross-sections containing polycarbonate, delamination can be a concern. The major causes of delamination are:

a) Unbalanced layup design. Balanced glass clad polycarbonates have a low delamination rate. As the layup becomes more unbalanced, the delamination rate increases.
b) Manufacturer guality controls. Using manufacturers with tight quality controls will result in fewer rejects due to delamination.
c) Hot and humid locations. The majority of delaminating occurs at sites with hot and humid year round weather. Areas that are cold, with winter snow, have few delaminations.
d) High glazing aspect ratios. Narrow cross-sections (aspect ratios greater that 3:1), particularly laminates, are subject to unbalanced stresses that can reduce the life expectancy of a glazing.

There are three types of glazing cross-sections: monolithic, laminated, and insulated. Monolithic cross-sections consist of a single piece of glass or plastic. Laminated cross-sections consist of two or more plies of material bonded together. Ply material can include glass and plastics. Insulated cross-sections consist of two or more lites separated by an enclosed airspace.

2.2.1 Monolithic Cross-Sections. Various types of glass and plastics are available for use as monolithic glazing. This paragraph describes the following types of monolithic glazing:

a) Annealed Glass
b) Heat Strengthened Glass
c) Thermally Tempered Glass
d) Chemically Treated Glass
e) Wire-Reinforced Glass
f) Polycarbonate
g) Acrylic

In general, monolithic glass cross-sections are vulnerable to forced entry and ballistic attacks. Once the glass fails, there is nothing to hold the broken fragments in place. This allows the fragments to fly or fall out, injuring personnel and yielding access to assets which need protection. Monolithic glass glazing, which fails as a result of a bomb attack, will permit jetting of unacceptable blast overpressure into the interior of a building and present an increased fragment hazard. For these reasons, monolithic glass is not recommended for use in security glazings.

2.2.1.1 Annealed Glass. Annealed glass is the most common form of glass available. Depending on manufacturing techniques, it is also know as plate, float, or sheet glass.

During the manufacturing process, annealed glass is cooled slowly without tight controls. This process yields a product which has very little residual compressive surface stress and large variations in strength. When compared with tempered glass, annealed glass is of relatively low strength.

Upon failure, annealed glass fractures into razor-sharp, dagger-shaped fragments. For this reason, monolithic annealed glass is not recommended for use in blast resistant windows.

2.2.1.2 Heat Strengthened Glass. Heat strengthened, heat treated, or semi-tempered glass exhibits neither the higher tensile strength nor the small cube-shaped fracture pattern associated with thermally tempered glass.

The cooling process of heat strengthened glass is controlled more tightly than annealed glass but less than thermally tempered glass. This results in large variations in the

strength of heat strengthened glass as precompression levels vary between 5,000 and 10,000 psi (35,000 and 70,000 kPa).

Heat strengthened glass is recommended for use in fire, ballistic, and forced entry resistant laminates for environmental protection.

2.2.1.3 Thermally Tempered Glass. Thermally tempered glass (TTG) is the most readily available tempered glass on the market. It is manufactured from annealed glass (float, polished, or plate) by heating to a high, uniform temperature and then applying controlled rapid cooling. Thermally tempered glass is typically four to five times stronger than annealed glass with a design stress of 16,000 psi (112,000 kPa).

Only tempered glass meeting the minimum fragment specifications of American National Standards Institute (ANSI) Z97.1-1984, American National Standard for Safety Glazing Materials Used in Buildings - Safety Performance Specifications and Methods of Test, or certified by the Safety Glazing Council (SGC) is to be used for blast design purposes. Certification by the SGC constitutes compliance with ANSI Z97.1-1984. TTG is controlled tightly in its tempering process to obtain the highest precompression level without incurring spontaneous breakage. This results in a higher surface precompression level and tensile strength with less variation than annealed or heat strengthened glass.

The design of thermally tempered glass is currently restricted to glass meeting both American Society for Testing and Materials (ASTM) C1048-92, Standard Specification for Heat-Treated Flat Glass - Kind HS, Kind FT Coated and Uncoated Glass, and ANSI Z97.1-1984. Tempered glass meeting only C1048-92 may possess a surface precompression of only 10,000 psi (70,000 kPa). At this level of precompression, the fracture pattern will be similar to annealed and semi-tempered (heat strengthened) glass with large razor-sharp shards.

The fracture characteristics of tempered glass are superior to those of annealed glass. Due to the high strain energy stored by the prestressing, tempered glass will eventually fracture into small cube-shaped fragments instead of the razor-sharp, dagger-shaped fragments associated with the fracture pattern of annealed glass. Breakage patterns of side and rear windows in American automobiles are a good example of the failure mode of TTG.

Although thermally tempered glass exhibits a relatively safe failure mode for conventional usage, failure under blast loading still presents a significant health hazard. Results from blast

tests reveal that upon fracture, TTG fragments may be propelled in cohesive clumps that only fragment upon impact into smaller rock-salt-type fragments. Even if the tempered glass breaks up initially into small fragments, the blast overpressure can propel the fragments at a high enough velocity to constitute a severe hazard.

Thermally tempered glass up to 1/2 inch (12 mm) thick can be easily purchased. Five-eighths and 3/4-inch (16-mm and 19-mm) thick TTG are also readily available. However, since demand is small for these thicknesses, they are typically two to two and one-half times as expensive as 1/2-inch (12-mm) TTG. Only limited quantities of 1-inch (25-mm) thick thermally tempered glass are available worldwide at premium prices.

2.2.1.4 Chemically Treated Glass. Glass can be tempered chemically by a bath process where ions are exchanged between the bath and the glass. Denser packing of the molecules close to the surface of the glass plate produces a layer of compression. Precompression levels between 10,000 and 45,000 psi (70,000 kPa and 315,000 kPa) are reported by industry.

As the molecular packing and precompression layer is usually not deeper than 0.012 inch (0.30 mm) from each surface (compared with 20 to 22 percent of overall thickness from each surface for thermally tempered glass), less strain energy is stored in the glass plate and consequently the fracture pattern resembles that of annealed glass.

Most, if not all, commercially available, chemically tempered glass for architectural purposes is manufactured from a soda-lime base. A common problem with soda-lime based chemically tempered glass is that the precompression depth or case depth is thin enough (0.001 inch (0.025 mm)) to be pierced by surface flaws (often 0.004 inch (0.10 mm) deep). If this occurs, the surface flaws will penetrate the inner tensile layer. The resulting stress concentration about the tip of the flaw in the tensile regime of the cross-section will often induce premature failure. Chemically strengthened glass is generally produced only in thicknesses up to 3/8 inch (10 mm).

As with heat strengthened glass, chemically strengthened glass provides environmental benefits when used as outboard plies for annealed glass or polycarbonate laminates. Laminated to an outboard layer of polycarbonate, chemically treated glass can increase the ballistic and fire resistance of polycarbonate and provide protection against environmental decay.

Soda-lime based chemically treated glass is not recommended for use in attack resistant windows unless it is a

laminate, or laminated on the outboard face of a glass-polycarbonate composite for ballistic resistance, fire resistance, or environmental protection of polycarbonate layers.

Only chemically tempered glass with a case or precompression level greater than 0.010 inch and a precompression stress greater than thermally tempered glass is suitable for blast resistant design. Only one known chemically tempered glass meets these criteria. It is a lithium-based chemically tempered glass and is estimated to cost ten times that of thermally tempered glass. However, it is well suited for special design situations where glass must appear thin or where both high ballistic and blast protection are required. This is because the lithium-based chemically tempered glass not only is at least three times stronger than thermally tempered glass, but will fail in a manner similar to annealed glass with large glass fragments. In laminated format it offers a significant degree of ballistic resistance to subsequent rounds.

2.2.1.5 Wire-Reinforced Glass. Wire-reinforced glass is a common glazing material. It consists of annealed glass with an embedded layer of wire mesh. Its primary use is as a fire resistant barrier. Wire-reinforced glass has the fracture and low strength characteristics of annealed glass and, although the wire binds some fragments, it still ejects a considerable amount of sharp glass and metal fragments. Wire-reinforced glass is not recommended for blast resistant windows unless it is laminated on the outboard or uninhabited face of a glass-polycarbonate composite for fire resistance, ballistic resistance, or environmental protection of the polycarbonate.

2.2.1.6 Polycarbonate. Thermoplastic polycarbonates are suitable for blast and forced entry resistant window design.

Polycarbonate is available monolithically in thicknesses up to 1/2 inch. It can be fused together to obtain any thickness needed. In the 1/2-inch range of thickness, polycarbonate is twice as expensive as TTG glass.

Other than cost, polycarbonate’s main disadvantage is that it is subjected to greater environmental degradation than glass, especially the effects of abrasion. However, chemical coatings are available to protect polycarbonates from both abrasion and ultraviolet radiation. All exposed polycarbonates should have one of these surface coatings. With these coatings, a service life expectancy of 10 years on externally exposed polycarbonate is not unreasonable.

Polycarbonate is a class CC-1 plastic according to the combustion classification of Building Officials and Code Administrators International, Inc. (BOCA) and the Southern Building Code Conference (SBCC). However, it has application for blast resistant glazing where large support deflections may be tolerated. For example, polycarbonate glazing can be supported in a cheaper frame that is either continually bolted or embedded into the adjoining wall. On the other hand, TTG glazing must be supported on a structurally stiff frame to prevent premature glass breakage.

Polycarbonate will burn when a flame is held to it. However, it will tend to extinguish itself when the flame is removed. Rated as a class CC-1 material, it is much less combustible than acrylic plastic.

Polycarbonate will often test with a smoke density rating over 500 according to the ASTM E84-95, Standard Test Method for Surface Burning Characteristics of Building Materials. As the Model Building Codes set an upper level on approval of 450, local building codes should be consulted before polycarbonate is specified. As polycarbonate can be difficult to break, local fire codes may require a percentage of polycarbonate glazings to pop out for emergency egress and venting. Again, local fire codes should be consulted.

Polycarbonate is resistant to most chemicals. However, it is particularly susceptible to degradation by aromatic hydrocarbons, gasoline, kerosene, carbon tetrachloride, esters, ketones, and acetones phenols. Exposure to these chemicals can result in embrittlement and hazing. Most, if not all, commercial window cleaning preparations are compatible with polycarbonate.

Polycarbonate has been used as a monolithic cross-section for protection against forced entry and blast attacks. In its monolithic form, polycarbonate can be vulnerable to a forced entry chemical attack because it has no barrier which prevents or delays an imbuing substance from poisoning the material. The use of chemicals is a sophisticated attack that would require a skilled and knowledgeable aggressor. This handbook will recommend the use of monolithic polycarbonate for applications where this level of sophistication in forced entry attack is not applicable.

2.2.1.7 Acrylic. Acrylic plastic is often used as an alternative glazing material. It is not recommended for attack resistant glazing due to its high flammability (class CC-2) and its brittle failure mode. Its fracture pattern is similar to

annealed glass. There are some security polycarbonate laminates which incorporate a ply of acrylic material in their interior.

2.2.2 Laminated Cross-Sections. Combining interlayer bonding materials with plies of glass, polycarbonate, or both produces cross-sections that perform well against ballistic, blast, and forced entry attack. This paragraph describes the following types of lamination materials and laminated cross-sections:

a) Interlayer Materials
b) Fragment Retention Film
c) Thermally Tempered Glass
d) Laminated and Fused Polycarbonate
e) Glass-Clad Polycarbonate
f) Glass-Clad Ionomer

The resultant fracture pattern from failed annealed, heat, and chemically strengthened glass are larger shards than those produced from TTG. Larger shards provide benefits to security laminates in areas of ballistic and forced entry attack resistance because there is more unbroken material to resist subsequent impacts. The larger shards strengthen a laminate, enabling a fractured glazing to remain in a frame and increase the probability that subsequent ballistic rounds will not find a break in the material. Larger shards also provide a defender with greater visibility.

The ballistic resistance of glass is directly related to the amount of kinetic energy absorbed in breaking up the glass. During a ballistic attack, interlayer material in a laminate holds glass material in place ahead of a bullet and absorbs energy from a bullet impacting the glass plate preceding it. Containment of fractured glass material forces a bullet to pulverize the material into a fine powder before it can make its way though the glass material.

2.2.2.1 Interlayer Materials. Selection of interlayer material is driven by compatibility issues and cost. Consideration must be given to incompatibilities when bonding nonhomogeneous materials. As a consequence, there are only two basic types of material which are available and used by laminators for the lamination of security laminates. They are Plasticized Polyvinyl Butyral (PVB) and Aliphatic Urethane.

There is a third interlayer material, Copal®, which is composed of silicone and polycarbonate materials. This

interlayer material is not available to laminators. It is a registered General Electric product used only by General Electric for the lamination of their polycarbonate glazing laminates.

a) PVB Interlayer Material. Polyvinyl butyral is used universally by the glazing industry for laminating glass products together. PVB is the most cost-effective interlayer material available.

There are basically three grades available: architectural, aircraft, and automotive. Architectural grade and aircraft grade PVB are the most predominate grades of PVB material for security glazing. Architectural grade PVB is the most widely used. Aircraft grade PVB is approximately twice as stiff as the architectural grade and is about four times as expensive.

Environmental durability of polyvinyl butyral is a known and proven quantity. Long-term use in automobile and aerospace windows indicates that few, if any, problems of environmental degradation will be encountered.

b) Urethane. Polyether urethane interlayer material can be used to laminate glass or polycarbonate materials.

Urethane material has better viscoelastic behavior at low temperatures than PVB material. This behavior is beneficial in applications involving high speed ballistic impacts at low temperatures.

Currently, there are only two interlayer materials which are compatible with polycarbonate for use in the lamination process. These materials are urethane and Copal®. Polyether urethane is the only type of interlayer material which is commercially available to laminators for the lamination of polycarbonate.

2.2.2.2 Fragment Retention Film. The polyester film used in commercial products is commonly referred to as fragment retention film, safety film, security film, protective film, or shatter resistant film. Fragment retention film is a system combining a strong pressure sensitive adhesive with a tough polyester layer. This film applies directly to the glass surface of a window pane. It is beneficial for retrofitting existing windows although it is also installed on new windows with the same benefits. Fragment retention film behaves similarly to relatively thin laminated and polycarbonate glazing in terms of fragmentation. It is available in common thicknesses of 2, 4, 7, and 10 mils (0.05, 0.10, 0.17, and 0.25 mm).

Fragment retention film provides optimum performance against low velocity impacts. This performance is best achieved when film is installed into the bite of a glazing. Fragment retention film is not recommended for ballistics or blast overpressure integrity. Film provides no fragment benefit to polycarbonate glazing. Reflective film can provide benefits for solar control as well as obfuscation for occupants of buildings.

The value of fragment retention film is in its ability to reduce fragmentation damage and its low initial installation costs. When the limitations and design considerations of film are recognized and compensated for in a protective system, film will serve its purpose. However, ignoring these aspects of film could lead to an expensive security system that does not provide adequate protection.

This handbook does not furnish guidance on applying or selecting fragment retention film. The U.S. Army Corps of Engineers provides two documents for this purpose: CEGS-08850, Fragment Retention Film for Glass, and ETL 1110-1-136, Engineering and Design: Fragment Retention Film for Glass.

2.2.2.3 Thermally Tempered Glass (TTG). TTG laminates can be obtained by lamination with polyvinyl butyral (PVB) or urethane. Frame compatibility and light transmissibility sets a laminated glass thickness of 2.5 inch (64 mm) as a practical upper bound. However, if special circumstances warrant, thicknesses up to 5 inches (127 mm) can be commercially obtained.

When subjected to blast overpressure, laminated TTG will exhibit strength and behavior between that of a set of stacked plates and a monolithic plate, depending upon temperature and duration of load. Conventionally, both the Government and private industry have set the design strength of a PVB glass laminate at ambient temperature under load at 75 percent of that of a monolithic plate of the same thickness as the glass-only portion of the laminate.

In terms of fragment retention, a laminated blast resistant lite offers a significant advantage over monolithic glass. If glass failure occurs, the interlayer material may retain most of the glass fragments. Also, if a projectile passes through the glass, most spalling glass fragments will be retained. Increased safety for fragment retention can be obtained in the event of a catastrophic failure due to a blast overpressure by placing a decorative crossbar or grillwork on the interior of the glazing.

2.2.2.4 Laminated and Fused Polycarbonate. A thickness of polycarbonate glazing exceeding 1/2 inch (12 mm) can be achieved by lamination or fusion.

A polycarbonate laminate performs better against chemical forced entry attack than a monolithic plate of polycarbonate. The interlayer between the first and second layers of polycarbonate provides a barrier to the imbuing liquid, thereby delaying poisoning of the polycarbonate.

Whenever large thicknesses of polycarbonate are anticipated, a design review should be considered. Polycarbonate is a moderate temperature insulator when exposed to a large temperature differential. A large temperature gradient within a large thickness of polycarbonate produces bending stresses in the cross-section. These diurnal stresses, if severe enough, will lead to delamination of a laminate or stress hardening of the monolithic material and result in a phenomenon known as crazing.

Although the moduli of elasticity for polycarbonate and urethane are somewhat different, responses of these two materials under blast overpressure loading are similar enough for a laminated cross-section to be considered monolithic for design purposes.

Polycarbonate fusion has been tested for strength and is a potential option for a specialized purpose. This process is more exotic and expensive than a lamination process and has a limited history. An “environmental review” must be considered whenever this process is proposed as an option.

2.2.2.5 Glass-Clad Polycarbonate. Glass-clad polycarbonates (GCP) are primarily used to protect against forced entry and ballistic attacks. If a glass-clad polycarbonate is intended to resist a bomb attack, resistance functions for blast design calculated from either the glass or the polycarbonate material, but not a combination of both materials, is a conservative estimate. The computer program, Safevue, described in Appendix C, builds resistance functions based on a combination of both materials.

There are two basic configurations of glass-clad polycarbonate glazing cross-sections. They are symmetrical and asymmetrical cross-sections. Symmetrical cross-sections are more environmentally stable. Environmental conditions are an important consideration for laminates incorporating a polycarbonate core thickness greater than 5/8 inch (16 mm).

Because polycarbonate has a coefficient of expansion eight times that of glass, the interlayer material at the glass-polycarbonate interface must be thick enough to allow for

movement. The defacto industry standard at the glass-polycarbonate interface is 0.050 inch (1.2 mm).

Aspect ratios are an important consideration and must be kept as close to one as possible. Avoid designing glazing “ribbons” because they tend to create unbalanced stresses relative to the long and short sides of a glazing which can pull the laminate apart.

a) Symmetrical Cross-Section. The glazing industry uses the term “symmetrical” for two different types of cross-sections. The first type, also known as a balanced cross-section, consists of a polycarbonate ply or polycarbonate laminate (known as the core) sandwiched between two plies of strengthened glass. This cross-section is primarily used to protect against forced entry attacks. The second type is a truly symmetrically cross-section with all materials (types and thickness) uniformly distributed around a neutral axis.

Balanced cross-sections can also be used for protection against ballistic attacks. The glass ply on the protected side of a ballistic threat cross-section is a very thin piece of strengthened glass. This arrangement, when used to protect against ballistic attacks, is known as a “lo-spall” product.

b) Asymmetrical Cross-Section. Asymmetrical cross-sections usually consist of an annealed, heat, or chemically strengthened glass laminate on the threat side laminated to a polycarbonate ply or laminate on the protected side. A polycarbonate ply or laminate on the protected side provides protection against spall and is known as a spall shield. This product is primarily used to protect against ballistic attacks. The primary benefit of this cross-section is its fragment resistance. This arrangement is known as a “no spall” product.

TTG is not recommended for multiple shot ballistic resistance because of its extensive break pattern. Semi-tempered glass can be used to provide a satisfactory, but thicker, outboard lite for blast and ballistic resistance. Because ballistic penetration is an empirical science, field tests are required to determine the actual level of ballistic resistance.

2.2.2.6 Glass-Clad Ionomer. Glass-clad ionomer cross-sections are produced only in a symmetrical arrangement. They provide excellent forced entry resistance, especially in cross-sections incorporating the thicker ionomer cores. These cross-sections perform well because the ionomer material is softer than

polycarbonate. Because of its softness, the ionomer tends to grab the blade of a saw and is somewhat self healing when cut.

2.2.3 Insulated/Air Gap Cross-Sections. Insulated or air gap glazing provides heat transfer benefits. Typically, an air gap glazing can reduce a temperature gradient by 50 percent. This is an important consideration for security applications requiring larger thicknesses of polycarbonate (see paragraph on laminated polycarbonate) where thermal stresses can significantly reduce the life of a product. Security applications which require larger thicknesses of polycarbonate include forced entry resistant cross-sections requiring longer delay times and blast overpressure resistant cross-sections where the resistance function is calculated from polycarbonate material.

2.3 Frames. Glazing frames provide a connection or interface between a building envelope and glazing material. This connection must be as strong as the other components of the system to maintain the integrity of the building. For security glazing systems, frame strength is required to resist attacks as well as environmental effects.

This paragraph describes frame systems and discusses design considerations related to attack resistance of frames.

2.3.1 Frame Systems. A basic frame system consists of a main frame, removable stop, fasteners, glazing tape, setting blocks, and sealant. More elaborate frame systems include subframes. This paragraph describes the following components of a frame system:

a) Main Frame
b) Subframe
c) Removable Stop
d) Fasteners
e) Glazing Tape, Sealant, and Setting Blocks

2.3.1.1 Main Frame. A glazing frame can be made from aluminum, aluminum with steel inserts, or steel. The frame must provide a system of drainage channels and flashing as necessary to weep water to the exterior. Operable frame designs for security applications are not recommended. Operable designs provide increased vulnerability to forced entry and blast security integrity and are costly to produce. Glazing bite should not be less than a minimum of 1 inch (25 mm) or the minimum determined by the blast consultant.

2.3.1.2 Subframe. A matching subframe and outer frame are recommended to resist bomb attacks. Subframes are mounted in the concrete form work prior to pouring concrete. Anchorage is embedded with welded anchor studs. After pouring the walls, outer frames and glazing can be installed in the subframes. A blast consultant must analyze and design a subframe and its anchorage. If an embed is not used, construction of concrete requires higher than normal quality control.

2.3.1.3 Removable Stop. The removable stop is a component of the frame that holds the glazing in place. The purpose of the removable stop is to allow installation of the glazing into the frame. Therefore, best security integrity against a forced entry attack is achieved when the removable stop is positioned on the interior side of the glazing, that is, the protected side. The removable stop is held in place with fasteners, anchor bolts, or both.

2.3.1.4 Fasteners. Fasteners hold the removable stop in place. For protection against forced entry attack, glazing fasteners should be installed on the protected side of the window.

2.3.1.5 Glazing Tape, Sealant and Setting Blocks. Glazing tape, sealant, and setting blocks provide a cushion between frame material and glazing to prevent glass breakage from thermal, settling, and wind loads of a building. Glazing tape and sealant support a glazing laterally. They set and maintain the face clearance between a frame bite and glazing face. Setting blocks set and maintain the edge clearance of a glazing.

These materials are in direct contact with a glazing or its edge. Compatibility with the glazing is an important consideration when selecting glazing tape and setting block materials. To avoid glazing contamination, use only manufacturer recommended glazing tape and setting block materials.

a) Sealant. A sealant is in direct contact with the glazing material. A sealant provides resistance to environmental degradation effects around the edge of a glazing. Security laminates should be wet sealed to obtain optimum performance in security applications. When installed, the sealant should be tooled to shed water.

Tests have shown that wet sealed glazing laminates tend to anchor failed glazing to the frame when subjected to blast overpressure. This phenomenon can reduce the risk of glass

fragments. Compatibility with the glazing materials is an important consideration when selecting sealant material.

2.3.2 Attack Resistance. Each attack tactic imposes unique requirements on a framing system. These requirements are described in the following paragraphs for frames subjected to forced entry, ballistic, and bomb attacks.

2.3.2.1 Forced Entry Resistance. Forced entry attacks require a frame to provide delay time against a physical attack. Frame systems must be designed to resist direct attacks that attempt to defeat glazing bite, frame material, type, or placement of fasteners.

2.3.2.2 Ballistic Resistance. Ballistic attacks represent a localized threat that can take advantage of frame material or thickness and clearances at the frame to glazing or frame-to-wall substrate interfaces. Ballistic resistance is typically obtained through the use of steel components. Most aluminum frames will not provide ballistic integrity unless they incorporate steel inserts in vulnerable areas.

Glazing systems that feature communication or transaction operations (e.g., teller windows) complicate ballistic resistant design. Vulnerable communication operations can be avoided by using electronic systems Vulnerable transaction operations can be minimized by using deal trays.

For full protection, a ballistic resistant frame must protect the 1 inch (25 mm) zone near the glazing edge that is not ballistically sound.

2.3.2.3 Blast Resistance. Blast resistant window framing must fully develop the design strength of a glazing. This requirement translates to rigid frames and frame-to-wall interfaces and flatness of the frame and glazing assembly. If the frame system is skewed or out of plane, the glazing can develop unbalanced stresses when loaded. This condition will lead to premature failure.

Aluminum frames with steel subframes can be used for small blast loads. Above 5 psi (35 kPa), frames must be constructed from steel members.

2.3.3 Environmental Effects. Frames are subjected to degradation from cleaning materials, cathodic reaction, and water infiltration. Degradation can be avoided by using compatible cleaning materials, using compatible spacers and wall substrate

or isolating the frame from the wall substrate, and incorporating weepholes and internal passages.

2.4 Anchorage. In typical wood frame construction, window frames are nailed to the walls. Because security glazing systems must resist attack, they have to be anchored to the walls.

Some frame designs, for concrete construction, use anchor bolts for a dual purpose. They not only serve to anchor a frame to a structure, but also serve as fasteners of the removable stop. Since a glazing must be removable without destroying the wall, careful consideration must be exercised as to the type of anchor bolt used in this design. Sleeved anchors and compression bolts which cannot be reinstalled are unacceptable for this application.

Place anchorage and fasteners on the protected side for security integrity and ease of replacement.

2.4.1 Anchor Bolt Types. Three types of anchors are available for installing glazing systems:

a) Taper Bolt
b) Expansion Sleeve Anchor
c) Embedded

2.4.1.1 Taper Bolt. Taper bolts have a uniform body diameter construction. The taper bolt incorporates a tapered thread on the bolt and a matching tapered thread in a nut. When screwed into a nut, the bolt wedges or anchors into concrete. Once the taper bolt is installed, it can be removed and reinstalled again without breaking up the wall. This allows replacement of the window frame without major wall work. Figure 4 illustrates a typical taper bolt design.

2.4.1.2 Expansion Sleeve Anchor. The expansion sleeve anchor incorporates a reduced body and mushroom end (see Figure 4). The reduced body fits inside a sleeve that wedges against the mushroom end.

Sleeved anchor bolts have only the strength of their inner bolt diameter in tension. If the expansion anchor is a multi-sleeved “spacer” design, its shear strength is only equal to that of the diameter of the inner bolt at the plane between the spacers. For this reason, the sleeved spacer design is not recommended for security applications.

2.4.1.3 Embedded Anchor. Embedded anchors are connectors that are cast in place, in concrete, at the time a building is constructed. They are manufactured in many different configurations and geometrical shapes. Embedded anchors that anchor security glazing frames usually have the geometric shape of a headed stud. The headed stud is then welded to a subframe which is cast in concrete at the time a building is constructed. Headed studs are produced from steel or stainless steel in diameters ranging from 1/4 to 7/8 inch (6 to 22 mm) in diameter. This type of anchorage is primarily used to protect against blast attack.

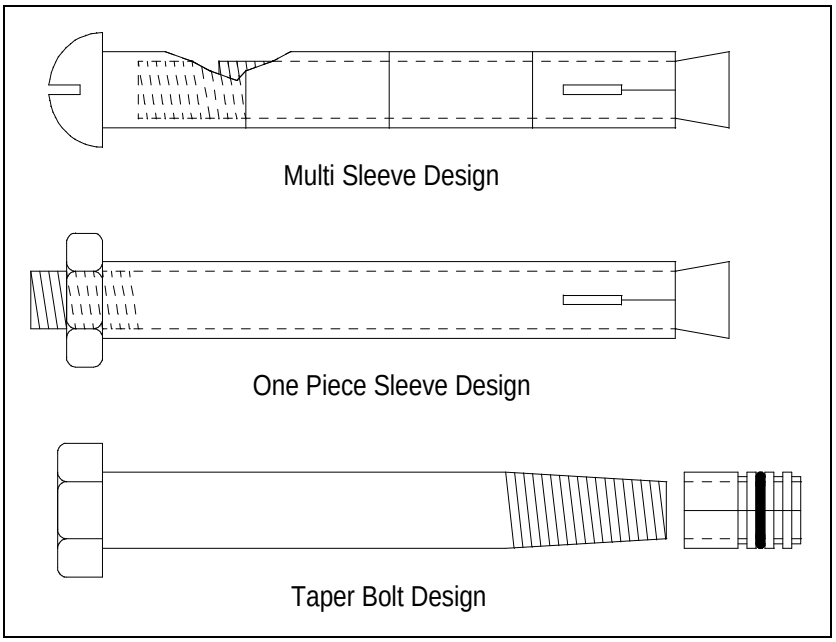


**Figure 4**
Expansion Anchors

2.5 Walls. The minimum construction requirements for wall systems are viewed as the basis of security requirements for construction of other structural components because several pertinent regulations require these other components to be as secure as the walls. The following wall systems are covered in this paragraph:

a) Wood Frame
b) Unreinforced Brick

c) 8-inch (200-mm) Reinforced Concrete Block
d) 8-inch (200-mm) Reinforced Concrete

Table 1 presents minimum wall construction requirements for the four wall systems covered. Refer to MIL-HDBK-1013/1A for additional design guidance on wall systems.

2.5.1 Wood Frame. This wall system is the minimum wall construction required to provide 1 minute of protection against forced entry attack with a low level tool mix. This wall construction is not recommended for protection against ballistic or bomb attacks.

2.5.2 Unreinforced Brick. This is a minimum wall construction requirement for storage structures for Arms, Ammunition, and Explosives (AA&E) risk categories I through IV. The wall construction is listed in Department of Defense (DOD) 5100.76-M, Physical Security of Conventional Arms, Ammunition, and Explosives. This wall system can be used for protection against low severity level forced entry attacks.

2.5.3 8-inch Reinforced Concrete Block. This is a minimum wall construction requirement for storage structures for AA&E risk category I through IV. The wall construction is listed in DOD 5100.76-M.

2.5.4 8-inch Reinforced Concrete. This is a minimum wall construction requirement for storage structures for AA&E risk category I through IV. The wall construction is listed in DOD 5100.76-M.

**Table 1**
Wall Construction

| Wall System | Construction |
|---|---|
| Wood Frame | 1-inch (25-mm) tongue-and-groove wood siding over 3/4-inch (19-mm) plywood (exterior) on 2-inch by 4-inch (50-mm by 100-mm) stud framing with plaster board on the interior. |
| Unreinforced Brick | At least 8 inches (200 mm) of brick interlocked between the inner and outer layers. |
| 8-inch (200-mm) Reinforced Concrete Block | 8-inch (200-mm) concrete block (or concrete masonry unit) with No. 4 (1/2-inch (12.7-mm) diameter) reinforcing steel bars threaded through block cavities filled with mortar or concrete and with horizontal joint reinforcement at every course. |
| 8-inch (200-mm) Reinforced Concrete | 8-inch (200-mm) concrete reinforced with No. 4 (1/2-inch (12-mm) diameter) reinforcing steel bars, 9 inches (230 mm) on center, in each direction and staggered on each face to form a grid about 4-1/2 inches (115 mm) square. |

# SECTION 3: AGGRESSOR THREATS AND TACTICS

3.1 Introduction. Historical patterns and trends in aggressor activity indicate general categories of aggressors and the common tactics which they can be predicted to use against military assets. These aggressor tactics and their associated tools, weapons, and explosives are the basis for the threat to assets. Understanding the basis for the threat and the aggressors' objectives is essential to effective protective system design. This section describes aggressors, tactics, tools, weapons, and explosives which are referred to throughout this handbook.

3.2 Aggressor Characteristics. Aggressors are people who perform hostile acts against assets such as equipment, personnel, and operations. Aggressor objectives and their general categories are described below.

3.2.1 Aggressor Objectives. There are four major aggressor objectives that describe aggressor behavior. An explanation of how these objectives apply to each aggressor category is presented in MIL-HDBK-1013/1A. The four aggressor objectives include:

a) inflicting injury or death on people
b) destroying or damaging facilities, property, equipment, or resources
c) stealing equipment, material, or information
d) creating adverse publicity

Aggressors may use the first three objectives to accomplish the fourth.

3.2.2 Aggressor Categories. The four general categories of aggressors considered in this handbook are criminals, protesters, terrorists, and subversives. Hostile acts performed by these aggressors range from crimes such as burglary to low-intensity conflict such as unconventional warfare. Each of these aggressor categories describes predictable aggressors that pose threats to military assets and who share common objectives and tactics. Table 2 lists the aggressor categories and groups covered in the handbook. Refer to MIL-HDBK-1013/1A for descriptions of these aggressor categories and groups.

**Table 2**
Aggressor Categories and Groups

| Aggressor Category | Group |
|---|---|
| Criminals | Casual Criminals |
| | Career Criminals |
| | Highly Organized Criminal Groups |
| Protesters | Vandals and Activists |
| | Extremist Protest Groups |
| Terrorists | CONUS Terrorists |
| | OCONUS Terrorists |
| | Paramilitary OCONUS Terrorist Groups |
| Subversives | Saboteurs |
| | Spies |

3.2.2.1 Categories Not Addressed. This handbook does not address the commonly referenced aggressor category of disaffected persons, which includes disoriented persons and disgruntled employees. These aggressors are not covered separately in this handbook because they exhibit similar characteristics to any of the four categories included or they may not present a predictable threat.

3.3 Aggressor Tactics. Aggressors have historically employed a wide range of offensive strategies reflecting their capabilities and objectives. This handbook categorizes these offensive strategies into five tactics that are specific methods of achieving aggressor goals against glazing systems.

a) Moving Vehicle Bomb Tactic
b) Stationary Vehicle Bomb Tactic
c) Exterior Tactic
d) Ballistics Tactic
e) Forced Entry Tactic

Separating these tactics into categories allows facility planners to define threats in standardized terms usable by facility designers and security personnel. Refer to MIL-HDBK-1013/1A for descriptions of these aggressor tactics.

3.3.1 Tactics Not Addressed. This handbook addresses the typical threats to fixed facilities for which designers can provide glazing protective measures. Glazing cannot provide adequate protection against many common terrorist acts directed at facilities. For example, glazing will not provide adequate protection against a standoff weapon tactic where an aggressor

uses antitank weapons or mortars. Refer to MIL-HDBK-1013/1A for alternatives to glazing that provide protection against this type of tactic. This handbook does not address tactics or postulated tactics which have no historical or intelligence basis such as suicidal or remote-controlled airborne bombings.

3.4 Tools, Weapons, and Explosives. Aggressors use various tools, weapons, and explosives to attain their objectives. The tools, weapons, and explosives included in this handbook represent those used currently and historically or those which can be expected in the near future. Table 3 provides a list of tool, weapon, and explosive categories used in this handbook. Specific tools, weapons, and explosives associated with each tactic are identified in Section 6 of this handbook. General descriptions of these tools, weapons, and explosives are provided in MIL-HDBK-1013/1A.

**Table 3**
Tools, Weapons and Explosives

| Classification | Category |
|---|---|
| Tools | Limited, Low-Observable Hand Tools |
| | Unlimited Hand Tools |
| | Limited, Battery-Powered Tools |
| | Unlimited Power Tools |
| | Unlimited Thermal Tools |
| | Explosives |
| Weapons | Small Arms |
| Explosives | Improvised Explosive Devices (IED) |
| | Vehicle Bomb |

# SECTION 4: SYSTEM ANALYSIS

## 4.1 Introduction.

4.1.1 Objective. The objective of this procedure is to establish minimum environmental and attack resistance requirements for system components to protect assets.

4.1.2 Application. There are two applications for system analysis: evaluation and selection. For new construction, either a new facility or planned retrofit of an existing facility, the minimum requirements are incorporated into a procurement specification. This is a selection application. For an existing facility, system components are compared to the minimum requirements to determine if replacement is warranted. This is an evaluation application.

4.1.3 Protective Layering. The analyses used in this handbook assume that security glazing is a component in a protective system consisting of a single layer or shell. For assets protected by systems consisting of multiple shells, this assumption could produce conservative selections that are not cost-effective. Refer to MIL-HDBK-1013/1A for guidance on analyzing protective systems consisting of multiple shells.

4.2 System Analysis Procedure. This procedure provides summary structures for the two types of applications: evaluation and selection analysis. Figure 5 illustrates these structures.

4.2.1 Required Information. The following information is required for the system analysis procedure:

a) Application type
b) Worksheets (See Appendix B):
    1) None

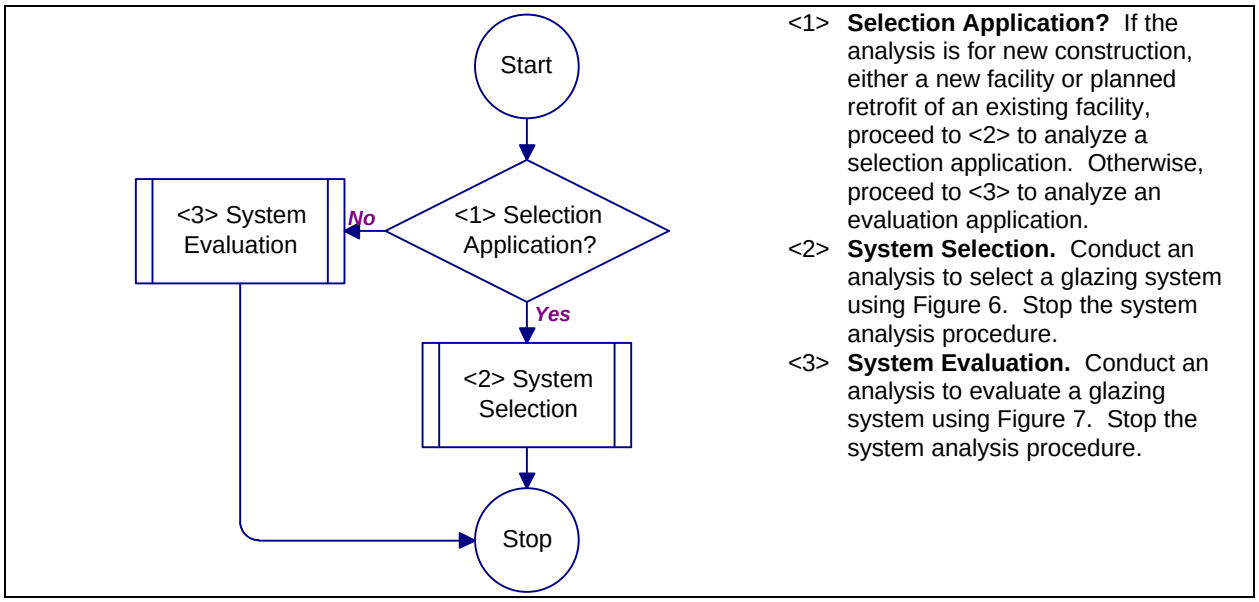


**Figure 5**
Process Chart and Description: System Analysis Procedure

4.3 System Selection Procedure. This procedure breaks out the different types of analysis into individual procedures for a selection application. The different types of analysis are attack, environmental, and cost. Figure 6 presents the process chart and description for this procedure.

4.3.1 Required Information. The following information is required for the system selection procedure:

a) Worksheets (See Appendix B):
   1) Cross-Section Selection (CSS)
   2) Frame Selection (FS)
   3) Anchorage Selection (AS)
   4) Wall Selection (WS)

4.4 System Evaluation Procedure. This procedure breaks out the different types of analysis into individual procedures for an evaluation application. The different types of analysis are attack and environmental. Figure 7 illustrates the process chart and describes this procedure.

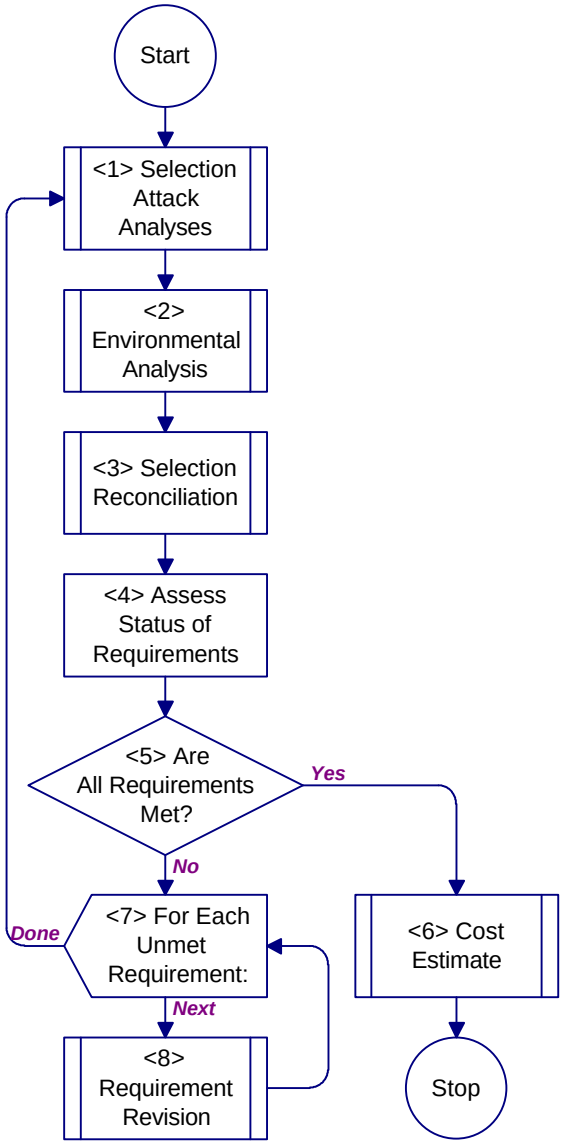


<1> **Selection Attack Analyses.** Conduct ballistic, bomb, and forced entry analysis of the glazing cross-section, frame, anchorage and wall using Figure 8. Proceed to <2>.

<2> **Environmental Analysis.** Conduct environmental analysis using Figure 30. Proceed to <3>.

<3> **Selection Reconciliation.** Determine the minimum requirements for the glazing system and components using Figure 10. Proceed to <4>.

<4> **Assess Status of Requirements.** Review Cross-Section Selection, Frame Selection, and Anchorage Selection worksheets (see Appendix B for all worksheets). Set aside worksheets that have the "No" box checked for the "Does Glazing Cross-Section Meet Design Requirements?" These are unmet requirements. Proceed to <5>.

<5> **Are All Requirements Met?** If all requirements have been met, proceed to <6>. Otherwise, proceed to <7> to revise requirements.

<6> **Cost Estimate.** Conduct a cost analysis of the selected glazing system components using Figure 34. Return to Figure 5.

<7> **For Each Unmet Requirement:** Use the Selection worksheets to identify unmet requirements. Proceed to <8> for next unmet requirement. Proceed to <1> when all unmet requirements have been revised.

<8> **Requirement Revision.** Revise requirements to locate acceptable glazing system components using Figure 14. Proceed to <7> for next requirement.

**Figure 6**
Process Chart and Description: System Selection Procedure

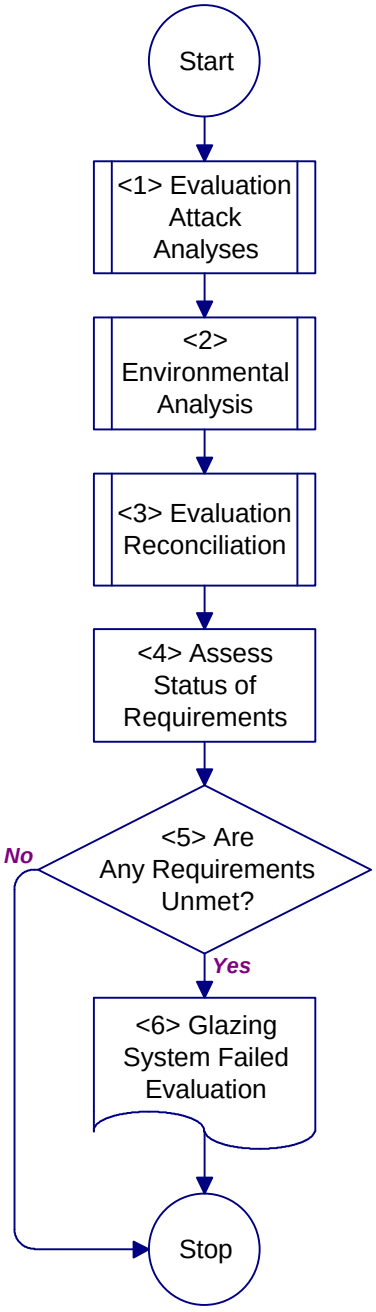


<1> **Evaluation Attack Analyses.** Conduct ballistic, bomb and forced entry analysis of the glazing cross-section, frame, anchorage and wall using Figure 9. Proceed to <2>.

<2> **Environmental Analysis.** Conduct environmental analysis using Figure 30. Proceed to <3>.

<3> **Evaluation Reconciliation.** Determine the minimum requirements for the glazing system and components using Figure 12. Proceed to <4>.

<4> **Assess Status of Requirements.** Review Cross-Section Evaluation, Frame Evaluation, and Anchorage Evaluation worksheets (see Appendix B for all worksheets). Set aside worksheets that have the "No" box checked for the "Does Glazing Cross-Section Meet Design Requirements?" Proceed to <5>.

<5> **Are Any Requirements Unmet?** Use the evaluation worksheets with unmet requirements. Proceed to <6> if any requirements are unmet. Return to Figure 5, if there are no unmet requirements.

<6> **Glazing System Failed Evaluation.** The existing glazing system failed to meet requirements. Consider doing a selection application to determine appropriate replacement glazing systems. Return to Figure 5.

**Figure 7**
Process Chart and Description: System Evaluation Procedure

4.4.1 Required Information. The following information is required for the system evaluation procedure:

a) Worksheets (see Appendix B):
   1) Cross-Section Evaluation (CSE)
   2) Frame Evaluation (FE)
   3) Anchorage Evaluation (AE)
   4) Wall Evaluation (WE)

4.5 Selection Attack Analyses Procedure. This procedure provides structures to analyze security glazing against ballistic, bomb, and forced entry attacks for a selection application. Figure 8 shows the process chart and describes the selection attack analyses procedure.

4.5.1 Required Information. The following information is required for the selection attack analyses procedure:

a) Design Basis Threat. This information is determined using Appendix D and is recorded on the Glazing System Design Criteria Summary worksheet.

4.6 Evaluation Attack Analyses Procedure. This procedure provides structures to analyze security glazing against ballistic, bomb, and forced entry attacks for an evaluation application. Figure 9 shows the process chart and describes the evaluation attack analyses procedure.

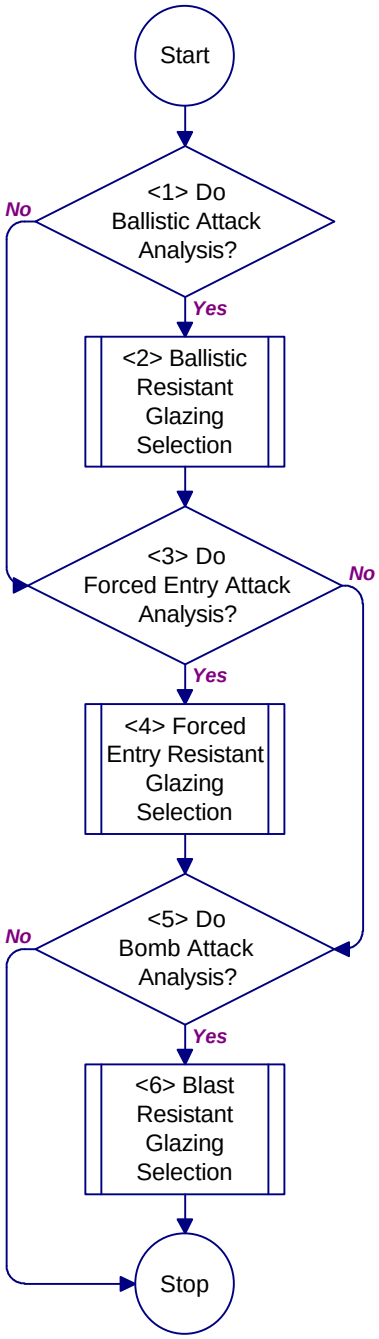


<1> **Do Ballistic Attack Analysis?** Refer to the design basis threat for the ballistic tactic on the DCS worksheet (see Appendix B for all worksheets). If ballistic attack is among the tactics that are a threat, proceed to <2>. Otherwise, proceed to <3>.

<2> **Ballistic Resistant Glazing Selection.** Conduct a ballistic attack analysis of a glazing system using Figure 20. Proceed to <3>.

<3> **Do Forced Entry Attack Analysis?** Refer to the design basis threat for the forced entry tactic on the DCS worksheet. If forced entry attack is among the tactics that are a threat, proceed to <4>. Otherwise, proceed to <5>.

<4> **Forced Entry Resistant Glazing Selection.** Conduct a forced entry attack analysis of a glazing system using Figure 26. Proceed to <5>.

<5> **Do Bomb Attack Analysis?** Refer to stationary and moving vehicle bomb and exterior tactics on the DCS worksheet. If bomb attack is among the tactics that are a threat, proceed to <6>. Otherwise, return to Figure 6.

<6> **Blast Resistant Glazing Selection.** Conduct a blast attack analysis of a glazing system using Figure 24. Return to Figure 6.

**Figure 8**
Process Chart and Description: Selection Attack Analyses Procedure

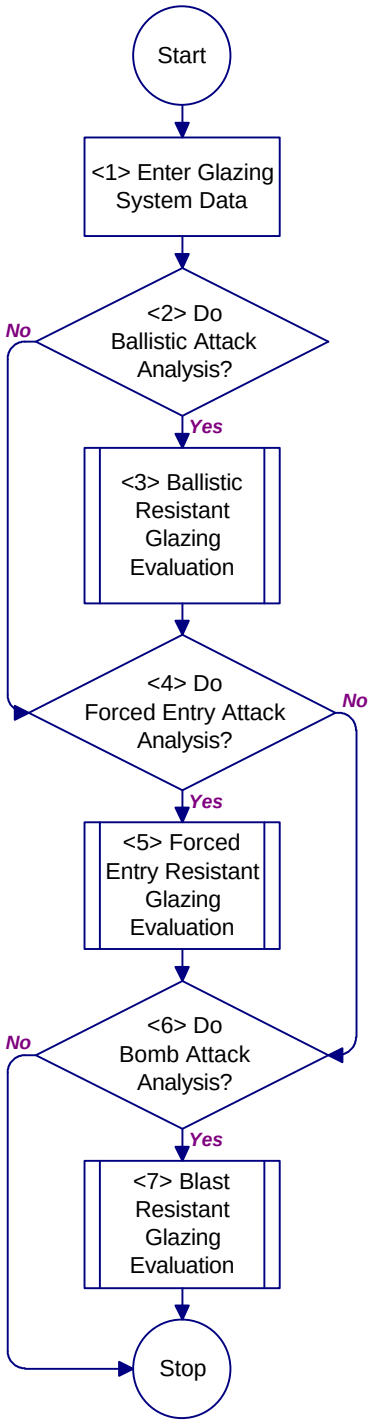


<1> **Enter Glazing System Data.** Enter the cross-section thicknesses in the appropriate row of column (a) on the Cross-Section Evaluation worksheet (see Appendix B for all worksheets). Enter the frame properties in column (a) on the Frame Evaluation worksheet. Enter the anchorage properties in column (a) on the Anchorage Evaluation worksheet. Enter the wall thickness in the appropriate row of column (a) on the Wall Evaluation worksheet. Enter the project and asset identifications on all evaluation worksheets. Proceed to <2>.

<2> **Do Ballistic Attack Analysis?** Refer to the design basis threat for the ballistic tactic on the DCS worksheet (see Appendix B for all worksheets). If ballistic attack is among the tactics that are a threat, proceed to <3>. Otherwise, proceed to <4>.

<3> **Ballistic Resistant Glazing Evaluation.** Conduct a ballistic attack analysis of a glazing system using Figure 16. Proceed to <4>.

<4> **Do Forced Entry Attack Analysis?** Refer to the design basis threat for the forced entry tactic on the DCS worksheet. If forced entry attack is among the tactics that are a threat, proceed to <5>. Otherwise, proceed to <6>.

<5> **Forced Entry Resistant Glazing Evaluation.** Conduct a forced entry attack analysis of a glazing system using Figure 28. Proceed to <6>.

<6> **Do Bomb Attack Analysis?** Refer to stationary and moving vehicle bomb and exterior tactics on the DCS worksheet. If blast attack is among the tactics that are a threat, proceed to <7>. Otherwise, return to Figure 7.

<7> **Blast Resistant Glazing Evaluation.** Conduct a blast attack analysis of a glazing system using Figure 22. Return to Figure 7.

**Figure 9**
Process Chart and Description: Evaluation Attack Analyses Procedure

4.6.1 Required Information. The following information is required for the evaluation attack analyses procedure:

a) Project identification
b) Asset identification
c) Number of stacked plates in cross-section
d) For each stacked plate:
    1) Type of glazing material
    2) Thickness of plate
    3) Number of layers in plate
    4) For each layer in a glass plate:
        i) Layer thickness
e) Cross-section type
f) Frame thickness
g) Removable stop thickness
h) Bite depth
i) Rabbet depth
j) Anchor bolt type
k) Anchor bolt diameter
l) Anchor bolt embedment
m) Material types and thicknesses in wall cross-section
n) Design Basis Threat. This information is determined using Appendix D and is recorded on the Glazing System Design Criteria Summary worksheet.
o) Worksheets (see Appendix B):
    1) Cross-Section Evaluation (CSE)
    2) Frame Evaluation (FE)
    3) Anchorage Evaluation (AE)
    4) Wall Evaluation (WE)

4.7 Selection Reconciliation Procedure. This procedure provides structures to reconcile differences in glazing system component minimum requirements against ballistic, bomb, and forced entry attacks. Figure 10 shows the process chart for the analysis reconciliation procedure. Figure 11 explains the structures presented in Figure 10.

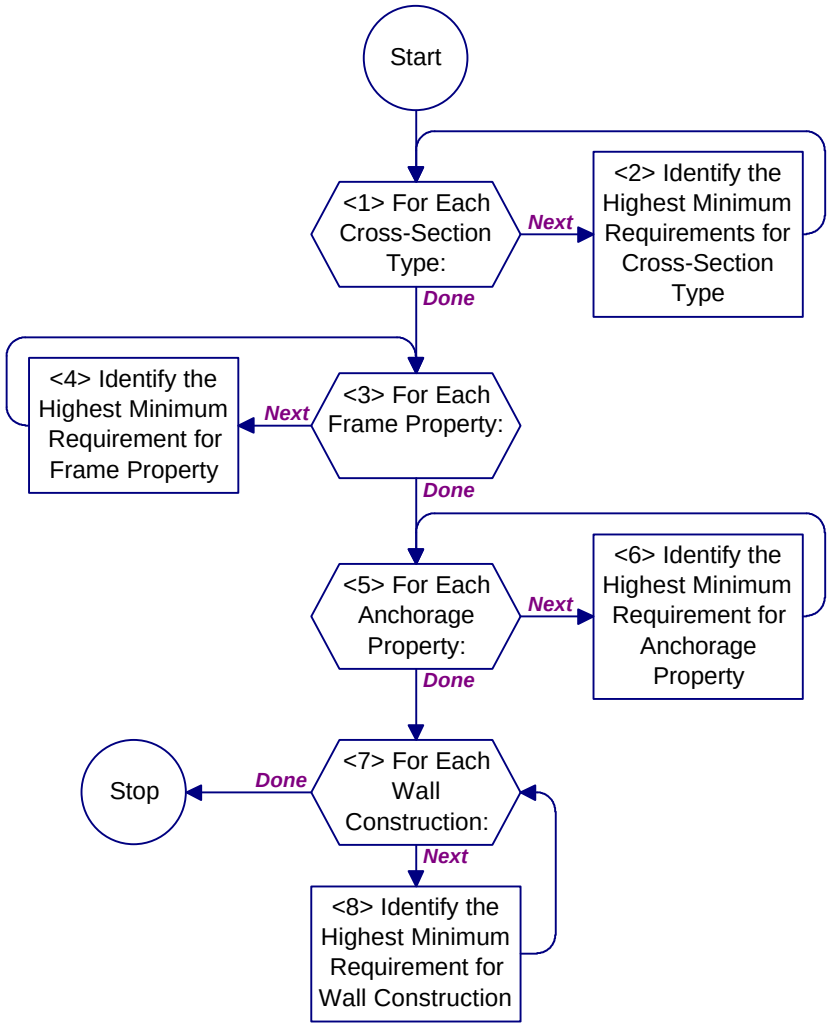


Refer to Figure 11 for description of procedure.

**Figure 10**
Process Chart: Selection Reconciliation Procedure

<1> **For Each Cross-Section Type:** Do <2> for each cross-section type identified on the Cross-Section Selection worksheet (see Appendix B for all worksheets). When done, proceed to <3>.
<2> **Identify Highest Minimum Requirements for Cross-Section Type.** Identify the highest minimum requirement for cross-section type across all tactics shown on the Cross-Section Selection worksheet. For this task, treat the term "standard" as the lowest minimum requirement. Enter the highest minimum requirement in column (f), Resolved Thickness. Proceed to <1>.
<3> **For Each Frame Property:** Do <4> for each frame property on the Frame Selection worksheet. When done, proceed to <5>.
<4> **Identify Highest Minimum Requirements for Frame Property.** Identify the highest minimum requirement for frame property across all tactics shown on the Frame Selection worksheet. For this task, treat the term "standard" as the lowest minimum requirement. Enter the highest minimum requirement in column (f), Resolved Specification. Proceed to <3>.
<5> **For Each Anchorage Property:** Do <6> for each anchorage property on the Anchorage Selection worksheet. When done, proceed to <7>.
<6> **Identify Highest Minimum Requirements for Anchorage Property.** Identify the highest minimum requirement for anchorage property across all tactics shown on the Anchorage Selection worksheet. For this task, treat the term "standard" as the lowest minimum requirement. Enter the highest minimum requirement in column (f), Resolved Specification. Proceed to <5>.
<7> **For Each Wall Construction:** Do <8> for each wall construction on the Wall Selection worksheet. When done, return to Figure 6.
<8> **Identify Highest Minimum Requirements for Wall Construction.** Identify the highest minimum requirement for wall construction across all tactics shown on the Wall Selection worksheet. For this task, treat the term "standard" as the lowest minimum requirement. Enter the highest minimum requirement in column (f), Resolved Thickness. Proceed to <7>.

**Figure 11**
Procedure Description: Selection Reconciliation Procedure

4.7.1 Required Information. The following information is required for the selection reconciliation procedure:

a) Worksheets (see Appendix B):
   1) Cross-Section Selection (CSS)
   2) Frame Selection (FS)
   3) Anchorage Selection (AS)
   4) Wall Selection (WS)

4.8 Evaluation Reconciliation Procedure. This procedure provides structures to reconcile differences in glazing system component minimum requirements against ballistic, bomb, and forced entry attacks. Figure 12 shows the process chart for the reconciliation procedure. Figure 13 explains the structures in Figure 12.

4.8.1 Required Information. The following information is required for the evaluation reconciliation procedure:

a) Worksheets (see Appendix B):
   1) Cross-Section Evaluation (CSE)
   2) Frame Evaluation (FE)
   3) Anchorage Evaluation (AE)
   4) Wall Evaluation (WE)

4.9 Requirements Revision Procedure. This procedure provides structures to revise requirements for protecting a facility against ballistic, bomb, and forced entry attacks. Figure 14 shows the process chart for the requirements revision procedure. Figure 15 explains the structures contained in Figure 14.

4.9.1 Required Information. The following information is required for the requirements revision procedure:

a) Security procedures
b) Justification for window
c) Site layout
d) Worksheets (see Appendix B):
   1)None

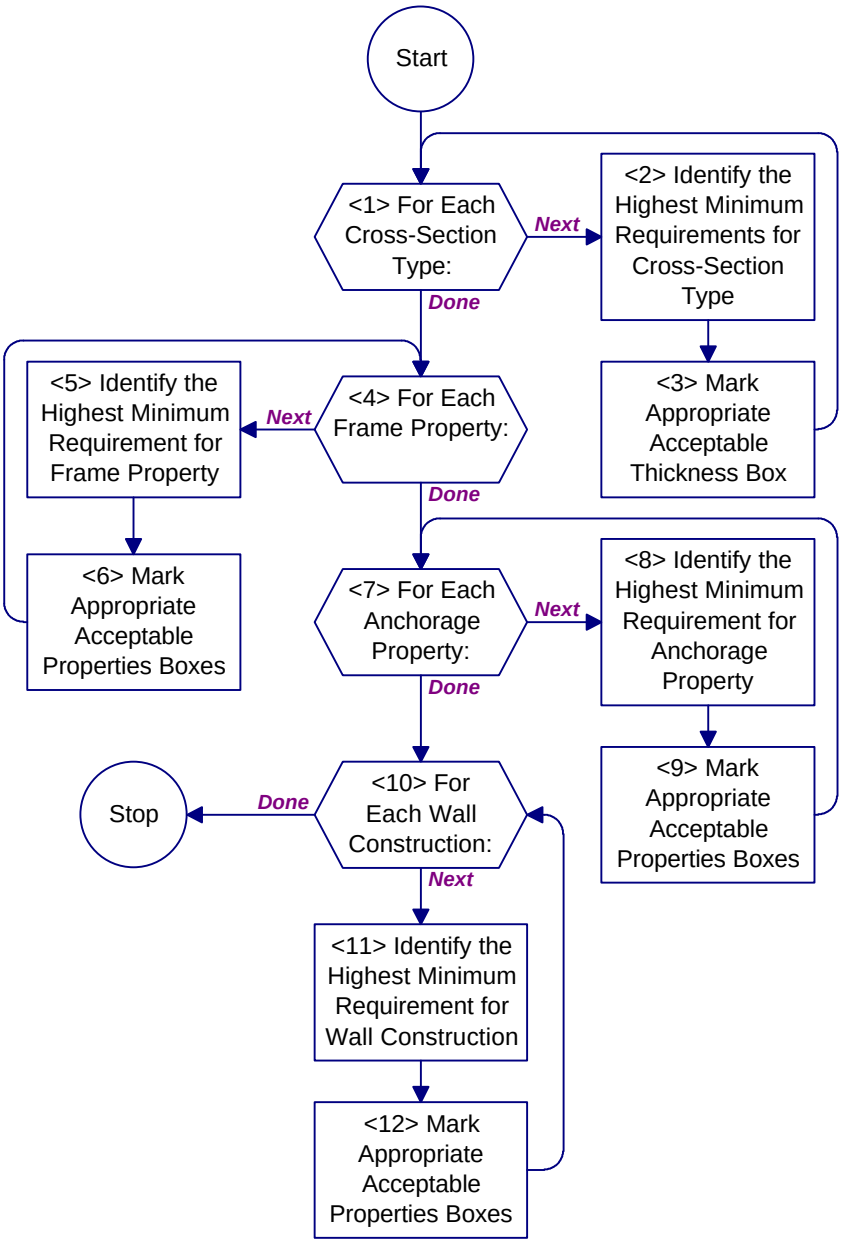


Refer to Figure 13 for description of procedure.

**Figure 12**
Process Chart: Evaluation Reconciliation Procedure

<1> **For Each Cross-Section Type:** Do <2> and <3> for each cross-section type identified on the Cross-Section Evaluation worksheet (see Appendix B for all worksheets). When done, proceed to <4>.

<2> **Identify Highest Minimum Requirements for Cross-Section Type.** Identify the highest minimum requirement for cross-section type across all tactics shown on the Cross-Section Evaluation worksheet. For this task, treat the term “standard” as the lowest minimum requirement. Enter the highest minimum requirement in column (g), Resolved Thickness. Proceed to <1>.

<3> **Mark Appropriate Acceptable Thickness Box.** If column (a), existing cross-section thicknesses, is greater than column (g), resolved thicknesses, check the “Yes” box in column (h), acceptable thicknesses. Otherwise, check the “No” box in column (h), acceptable thicknesses. Proceed to <1>.

<4> **For Each Frame Property:** Do <5> and <6> for each frame property on the Frame Evaluation worksheet. When done, proceed to <7>.

<5> **Identify Highest Minimum Requirements for Frame Property.** Identify the highest minimum requirement for frame property across all tactics shown on the Frame Evaluation worksheet. For this task, treat the term “standard” as the lowest minimum requirement. Enter the highest minimum requirement in column (g), Resolved Properties. Proceed to <6>.

<6> **Mark Appropriate Acceptable Properties Boxes.** If column (a), existing properties, is better than column (g), resolved properties, check the “Yes” box in column (h), acceptable properties. Otherwise, check the “No” box in column (h), acceptable properties. Proceed to <4>.

<7> **For Each Anchorage Property:** Do <8> and <9> for each anchorage property on the Anchorage Evaluation worksheet. When done, proceed to <10>.

<8> **Identify Highest Minimum Requirements for Anchorage Property.** Identify the highest minimum requirement for anchorage property across all tactics shown on the Anchorage Evaluation worksheet. For this task, treat the term “standard” as the lowest minimum requirement. Enter the highest minimum requirement in column (g) Resolved Properties. Proceed to <9>.

<9> **Mark Appropriate Acceptable Properties Boxes.** If column (a), existing properties, is better than column (g), resolved properties, check the “Yes” box in column (h), acceptable properties. Otherwise, check the “No” box in column (h), acceptable properties. Proceed to <7>.

<10> **For Each Wall Construction:** Do <11> and <12> for each anchorage property on the Wall Evaluation worksheet. When done, return to **Figure 7**.

<11> **Identify Highest Minimum Requirements for Wall Construction.** Identify the highest minimum requirement for wall construction across all tactics shown on the Wall Evaluation Application. Enter the highest minimum requirement in column (g) Resolved Thickness. Proceed to <12>.

<12> **Mark Appropriate Acceptable Properties Boxes.** If column (a), existing properties, is better than column (g), resolved properties, check the “Yes” box in column (h), acceptable properties. Otherwise, check the “No” box in column (h), acceptable properties. Proceed to <10>.

**Figure 13**
Procedure Description: Evaluation Reconciliation Procedure

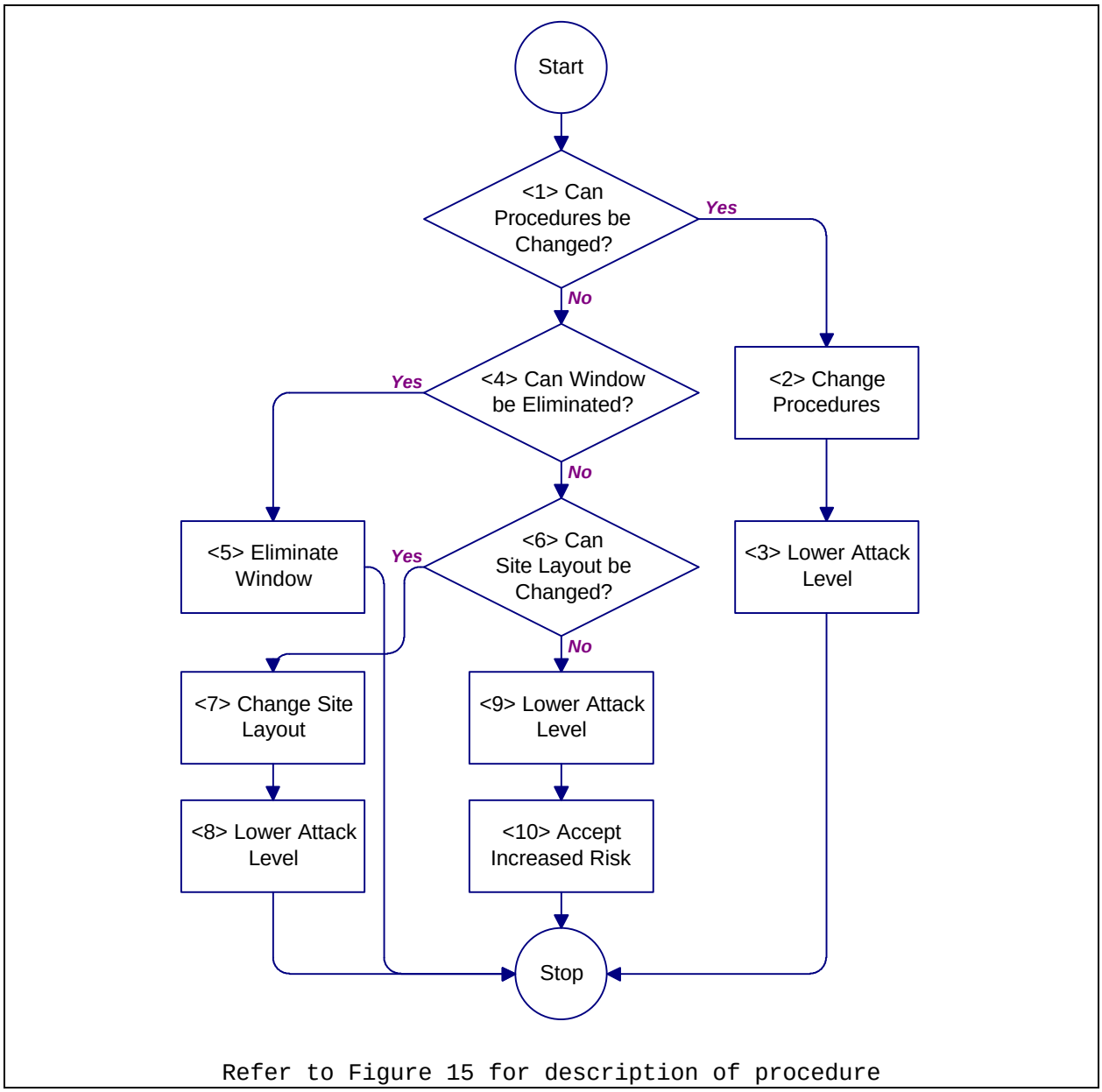


**Figure 14**
Process Chart: Requirements Revision Procedure

<1> **Can Procedures be Changed?** Consider changing security procedures to lower attack level. Procedural changes could include guard routing, restricting access, or moving critical assets. If procedures can be changed, proceed to <2>. Otherwise, proceed to <4>.

<2> **Change Procedures.** Revise security procedures to allow lowering attack level. Proceed to <3>.

<3> **Lower Attack Level.** Lower the attack level affected by the change in procedure. This structure completes the new requirement procedure. Return to Figure 5.

<4> **Can Window be Eliminated?** Consider eliminating the window to do away with the need for security glazing systems. If the window is not needed and can be eliminated, proceed to <5>. Otherwise, proceed to <7>.

<5> **Eliminate Window.** Remove window from facility design and stop selection process for this window. Return to Figure 5.

<6> **Can Site Layout be Changed?** Consider changing the site or facility layout to reduce attack level or eliminate attack tactic. If the site layout can be changed, proceed to <7>. Otherwise, proceed to <9>.

<7> **Change Site Layout.** Revise site or facility layout to lower attack level or eliminate attack tactic. Proceed to <8>.

<8> **Lower Attack Level.** Lower the attack level affected by the change in site layout. This structure completes the new requirement procedure. Return to Figure 5.

<9> **Lower Attack Level.** The only remaining option is to lower the attack level to a point that a glazing system can meet a set of specifications and requirements. Lower the attack level one level. Proceed to <10>.

<10> **Accept Increased Risk.** Arbitrarily lowering an attack level increases the risk that a security glazing system will not provide the level of protection deemed necessary during the planning phase. This increased risk must be recognized and accepted. This structure completes the new requirement procedure. Return to Figure 5.

**Figure 15**
Procedure Description: Requirements Revision Procedure

# SECTION 5: BALLISTIC RESISTANT GLAZING

5.1 Introduction. This section provides two procedures to analyze the resistance of glazing systems against ballistic attack. The first is the Ballistic Resistant Glazing Evaluation Procedure. Use it to evaluate existing windows. The second is the Ballistic Resistant Glazing Selection Procedure. Use it to select glazing systems for new construction and to retrofit existing facilities.

5.2 Levels of Protection to Resist Ballistic Attack. There is one level of protection to resist a ballistic attack. This level is referred to as high level of protection for consistency with Army TM 5-583-1. Table 4 provides a summary of the protective measures for this level of protection. Refer to Table D-30 for design parameters associated with each of the threat severity levels for ballistic attack.

**Table 4**
Ballistic Attack Protective Measures Summary

| Threat Severity Level | Level of Protection |
|---|---|
| | High |
| All | 1. Provide glazing system to resist threat severity level.<br>2. Minimize number and size of windows. |

5.3 Ballistic Resistant Glazing Evaluation Procedure. This procedure helps to evaluate the performance of an existing glazing system subjected to ballistic attack. It provides a set of structures that step an analyst through the process of comparing existing glazing materials with materials known to resist specific levels of ballistic attacks. A process chart and description of the procedure are shown in Figure 16 and Figure 17, respectively.

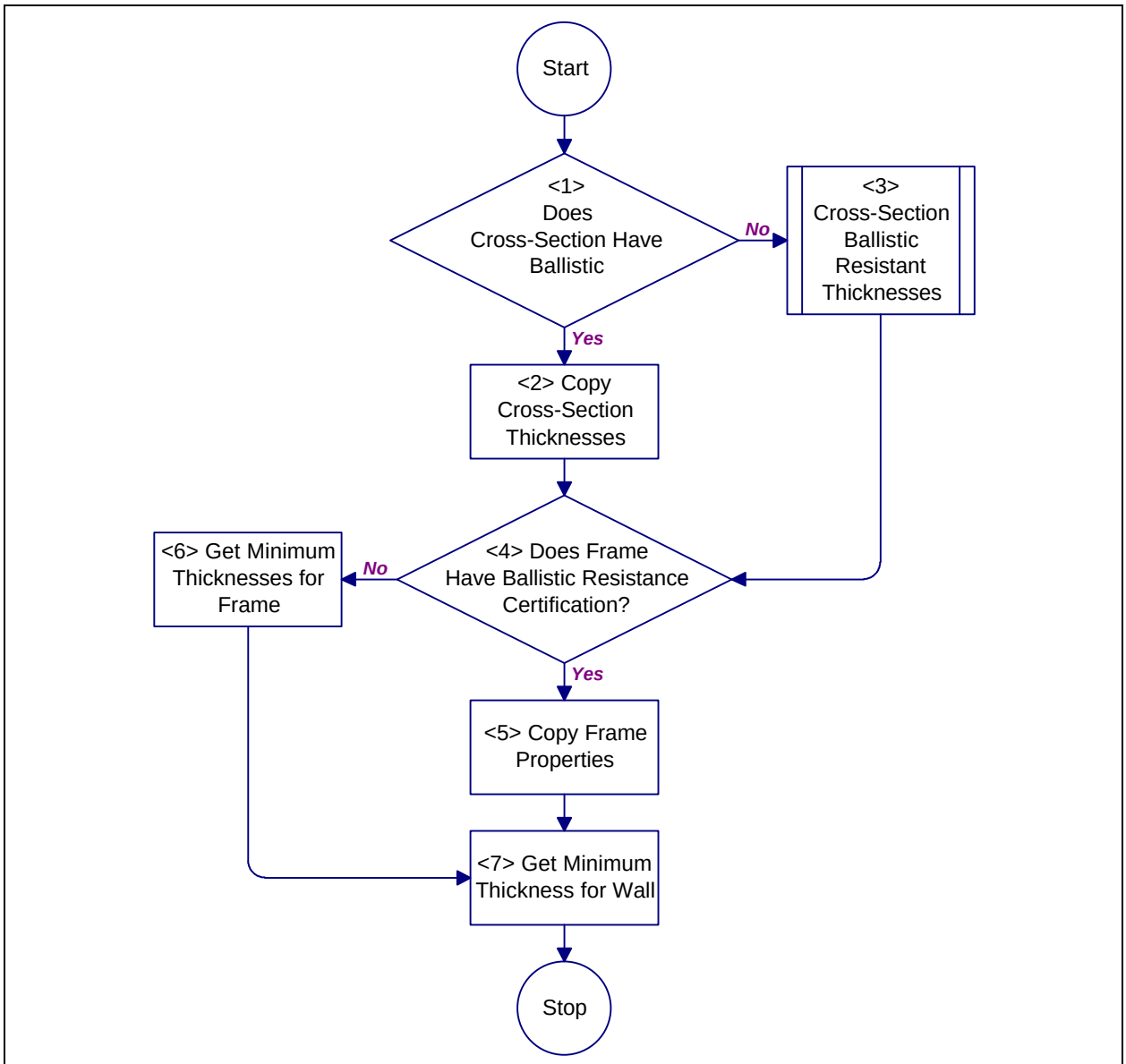


Refer to Figure 17 for description of procedure.

**Figure 16**
Process Chart: Ballistic Resistant Glazing Evaluation Procedure

<1> **Does Cross-Section Have Ballistic Resistance Certification?** Determine if the glazing cross-section is certified to resist ballistics attack at the required threat severity level using Table 5. If the cross-section is certified at the required threat severity level, proceed to <2>. Otherwise proceed to <3>.

<2> **Copy Cross-Section Thicknesses.** In the appropriate row of the Cross-Section Evaluation worksheet (see Appendix B for all worksheets), copy the values in column (a) to column (d). Proceed to <4>.

<3> **Cross-Section Ballistic Resistant Thicknesses.** Get cross-section thicknesses for the appropriate threat severity level. Use Figure 18. Proceed to <4>.

<4> **Does Frame Have Ballistic Resistance Certification?** Determine if the frame is certified to resist ballistic attack at the required level using Table 5. If frame is certified at the required threat severity level, proceed to <5>. Otherwise, proceed to <6>.

<5> **Copy Frame Properties.** Copy data in column (a) of the Frame Evaluation worksheet to column (e). Proceed to <7>.

<6> **Get Minimum Thicknesses for Frame.** Get the minimum frame thicknesses from Table 6 and enter these values into column (e) of the Frame Evaluation worksheet. Proceed to <7>.

<7> **Get Minimum Thickness for Wall.** Get the minimum wall thickness of the appropriate wall construction from Table 7 and enter this value into column (e) of the Wall Evaluation worksheet. Return to Figure 9.

**Figure 17**
Description: Ballistic Resistant Glazing Evaluation Procedure

**Table 5**
Ballistic Tactic Threat Severity Level Standards

| Threat Severity Level | Standard | Caliber Weapon | Bullet Weight and Type | Velocity Range ft/s (m/s) | Number of Shots Resisted |
|---|---|---|---|---|---|
| Low | UL-752-95[a] Level 1 | 9 mm | 124 gr. Full metal jacket with lead core | 1175-1292 (358-394) | 3 |
| Medium | UL-752-95[a] Level 3 | .44 Magnum Revolver | 240 gr. lead semi-wadcutter gas checked | 1350-1485 (411-452) | 3 |
| High | HPW-D[b] | 7.62mm Assault Rifle | 147 gr. M-80 ball | 2700-2800 (823-853) | 3 |
| | UL-752-95[a] Supplementary shotgun | 12 ga. | 437 gr. Rifled lead slug | 1585-1743 (483-531) | 3 |
| Very High | UL-752-95[a] Level 8 | 7.62mm Rifle | 150 gr. lead core full metal jacket, military ball | 2750-3025 (838-922) | 5 |

[a] Underwriters Laboratories, Inc., Standard for Bullet-Resisting Equipment
[b] H.P. White Laboratory, Inc., Transparent Materials and Assemblies for Use in Entry or Containment Barriers

**Table 6**
Minimum Thicknesses for Ballistic Resistant Frames

| Item | Minimum Size, inch (mm) |
|---|---|
| Frame Thickness | 1/4 (6) steel |
| Removable Stop Thickness | 3/16 (5) steel |

**Table 7**
Minimum Thicknesses for Ballistic Resistant Walls

| Threat Severity Level | CMU (grouted) or Brick Thickness, inch (mm) | Reinforced Concrete Thickness, 3,000 psi (21,000 kPa), inch (mm) |
|---|---|---|
| Low | 4 (100) | 2 (50) |
| Medium | 4 (100) | 2-1/2 (64) |
| High | 8 (200) | 4 (100) |
| Very High | (a) or (b) | 8 (200) |

(a) 4-inch (100-mm) solid CMU, 3/4-inch (19-mm) rigid urethane, and 8-inch (200-mm) grout-filled CMU.
(b) 6-inch (300-mm) grout-filled CMU, insulation, 6-inch (300-mm) grout-filled CMU.

5.3.1 Required Information. The following information is required for a ballistic resistant glazing evaluation:

a) Ballistic Tactic Design Basis Threat (medium, high, or very high). This information is determined using Appendix D and is recorded on the Glazing System Design Criteria Summary worksheet.
b) Cross-section ballistic resistance certification.
c) Cross-section thicknesses.
d) Frame ballistic resistance certification.
e) Frame properties. Refer to Section 2 for descriptions of frame properties.
f) Worksheets (see Appendix B):
    1) Cross-Section Evaluation (CSE)
    2) Frame Evaluation (FE)
    3) Wall Evaluation (WE)

5.4 Cross-Section Ballistic Resistant Thicknesses Procedure. This procedure helps to evaluate the performance of an existing glazing cross-section subjected to ballistic attack. It provides a set of structures that step an analyst through the process of getting cross-section thicknesses for glazings known to resist specific levels of ballistic attacks. A process chart

and description of the procedure are shown in Figure 18 and Figure 19, respectively.

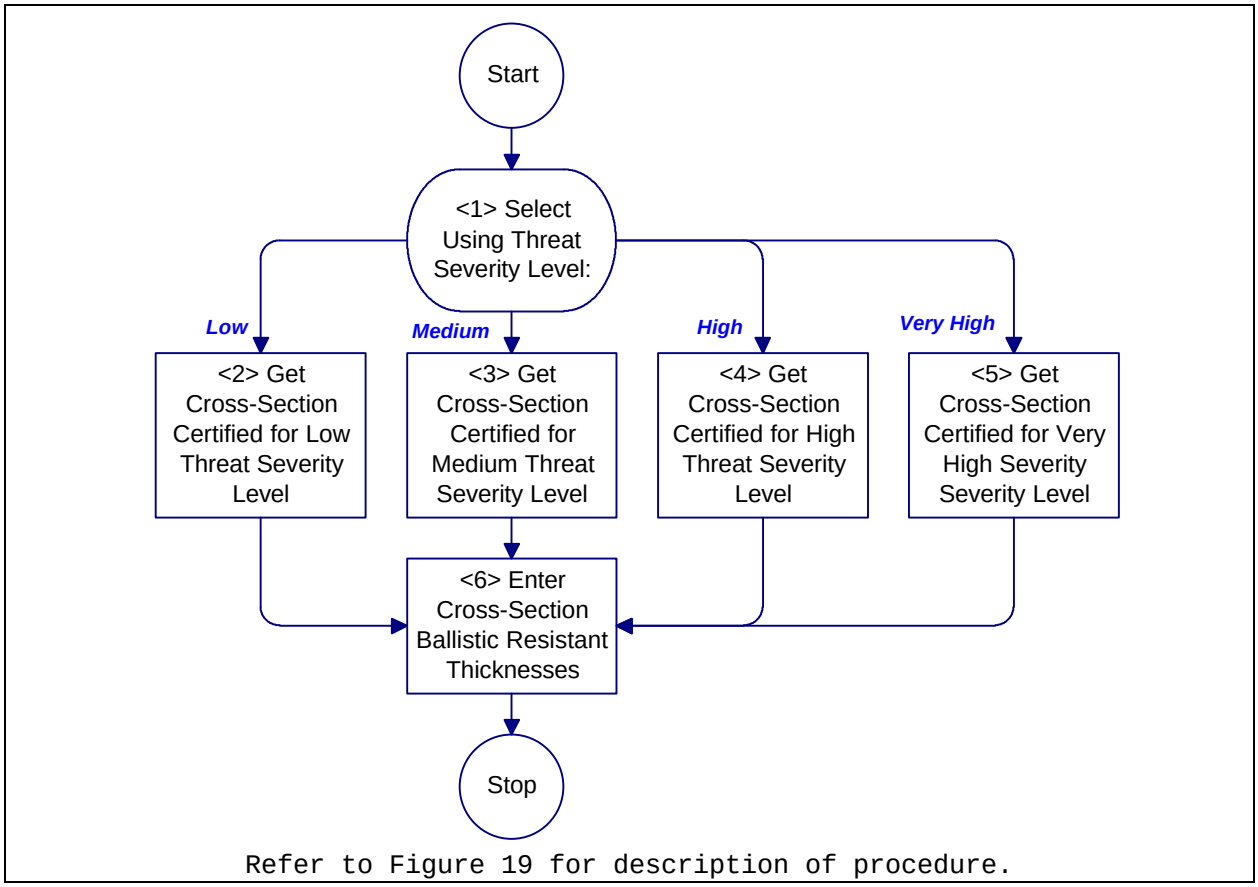


**Figure 18**
Process Chart: Cross-Section Ballistic Resistant Thicknesses Procedure

<1> **Select Using Threat Severity Level.** Select the next structure to execute using the ballistic threat severity level. For a severity level of low, proceed to <2>. For a severity of medium, proceed to <3>. For a severity of high, proceed to <4>. For a severity of very high, proceed to <5>.
<2> **Get Cross-Section Certified for Low Threat Severity Level.** Find the appropriate cross-section type in Table 8. From the table, select the cross-section of that type which most closely resembles the existing cross-section. Proceed to <6>.
<3> **Get Cross-Section Certified for Medium Threat Severity Level.** Find the appropriate cross-section type in Table 9. From the table, select the cross-section of that type which most closely resembles the existing cross-section. Proceed to <6>.
<4> **Get Cross-Section Certified for High Threat Severity Level.** Find the appropriate cross-section type in Table 10. From the table, select the cross-section which most closely resembles the existing cross-section. Proceed to <6>.
<5> **Get Cross-Section Certified for Very High Threat Severity Level.** Find the appropriate cross-section type in Table 11. From the table, select the cross-section which most closely resembles the existing cross-section. Proceed to <6>.
<6> **Enter Cross-Section Ballistic Resistant Thicknesses.** Enter the thicknesses of the selected cross-section into column (e) of the Cross-Section Evaluation worksheet (see Appendix B for all worksheets). Return to Figure 16.

**Figure 19**
Description: Cross-Section Ballistic Resistant Thicknesses Procedure

**Table 8**
Typical Thicknesses for Low Threat Severity Level Ballistic Resistant Glazing Cross-Sections

| Type | Thickness, inch (mm) | Cross-Section, inch (mm) | Figure |
|---|---|---|---|
| Air Gap | 7/8 (22) | 1/4 (6) LAM[a] SG[b], 1/4 (6) AIR, 3/8 (9) LAM POLY[c] | Figure F-2 |
| Glass-Clad Polycarbonate | 9/16 (14) | 1/4 (6) LAM CSG[d], 1/4 (6) LAM POLY | Figure F-10 |
| | 5/8 (16) | 1/4 (6) LAM SG, 3/8 (9) LAM POLY | Figure F-11 |
| | 15/16 (24) | 3/16 SG, 1/4 (6) AG[e], 3/8 (9) LAM POLY | Figure F-14 |
| Laminated Glass | 1-3/16 (30) | 1-1/8 (28) LAM AG | Figure F-27 |
| Laminated Polycarbonate | 1 (25) | 1 (25) LAM POLY | Figure F-30 |

[a] Laminated
[b] Strengthened glass
[c] Polycarbonate
[d] Chemically strengthened glass
[e] Annealed glass

5.4.1 Required Information. The following information is required for a cross-section ballistic resistant thicknesses procedure:

a) Ballistic Tactic Design Basis Threat (low, medium, high, or very high). This information is determined using Appendix D and is recorded on the Glazing System Design Criteria Summary worksheet.
b) Cross-section type. Refer to Section 2 for descriptions of cross-section types.
c) Worksheets (see Appendix B):
   1) Cross-Section Evaluation (CSE)

**Table 9**
Typical Thicknesses for Medium Threat Severity Level Ballistic Resistant Glazing Cross-Sections

| Type | Thickness, inch (mm) | Cross-Section, inch (mm) | Figure |
|---|---|---|---|
| Air Gap | 1-1/4 (31) | 1/2 (12) LAM[a] SG[b], 1/4 (6) AIR, 1/2 (12) LAM POLY[c] | Figure F-4 |
| | 1-1/4 (31) | 1/4 (6) LAM SG, 1/4 (6) AIR, 3/4 (19) LAM POLY | Figure F-5 |
| Glass-Clad Polycarbonate | 1 (25) | 3/8 (10) LAM CSG[d], 1/2 (12) LAM POLY | Figure F-15 |
| | 1-3/16 (30) | 1/4 (6) SG, 3/8 (10) AG[e], 3/8 (10) LAM POLY | Figure F-16 |
| | 1-3/16 (30) | 7/8 (22) LAM AG, 1/4 (6) POLY | Figure F-17 |
| | 1-3/16 (30) | 7/8 (22) AG, 1/4 (6) POLY | Figure F-18 |
| | 1-1/4 (31) | 1/8 (3) SG, 5/16 (8) AG, 1/2 (12) LAM POLY | Figure F-19 |
| | 1-5/16 (33) | 1/8 (3) CSG, 5/8 (16) LAM AG, 3/8 (6) POLY | Figure F-20 |
| Laminated Glass | 1-3/4 (44) | 1-3/4 (44) LAM AG | Figure F-28 |
| Laminated Polycarbonate | 1-1/4 (31) | 1-1/4 (31) LAM POLY | Figure F-31 |

[a] Laminated
[b] Strengthened glass
[c] Polycarbonate
[d] Chemically strengthened glass
[e] Annealed glass

**Table 10**
Typical Thicknesses for High Threat Severity Level Ballistic Resistant Glazing Cross-Sections

| Type | Thickness, inch (mm) | Cross-Section, inch (mm) | Figure |
|---|---|---|---|

| | | | |
|---|---|---|---|
| Air Gap | 1-15/16 (49) | ¾ (19) LAM[a] SG[b], 1/4 (6) AIR, 15/16 (24) LAM POLY[c] | Figure F-7 |
| Glass-Clad Polycarbonate | 1-3/8 (35) | 1/8 (3) SG, 3/4 (19) LAM AG[d], 3/8 (10) POLY | Figure F-21 |
| | 1-3/8 (35) | 1 (25) LAM AG, 1/4 (6) POLY | Figure F-22 |
| | 1-1/2 (37) | 1-1/8 (28) LAM SG, 3/16 (5) POLY | Figure F-23 |
| | 1-5/8 (41) | 1-1/8 (28) LAM AG, 3/8 (10) LAM POLY | Figure F-24 |
| Laminated Glass | 2 (50) | 2 (50) LAM AG | Figure F-29 |

[a] Laminated
[b] Strengthened glass
[c] Polycarbonate
[d] Annealed glass

**Table 11**
Typical Thicknesses for Very High Threat Severity Level Ballistic Resistant Glazing Cross-Sections

| Type | Thickness, inch (mm) | Cross-Section, inch (mm) | Figure |
|---|---|---|---|
| Glass-Clad Polycarbonate | 2-1/16 (52) | 1-5/8 (41) LAM[a] AG[b], 1/4 (6) POLY[c] | Figure F-25 |
| | 2-1/16 (52) | 1/8 (3) SG[d], 1-1/8 (28) LAM AG, 3/16 (5) POLY | Figure F-26 |

[a] Laminated
[b] Annealed glass
[c] Polycarbonate
[d] Strengthened glass

5.5 Ballistic Resistant Glazing Selection Procedure. This procedure contains structures for analysis of glazing systems subject to ballistics attack. This procedure will step an analyst through the process of selecting cross-sections and frames to protect against specific ballistic attack threat severity levels. A process chart is shown in Figure 20 and a description of the procedure is presented in Figure 21.

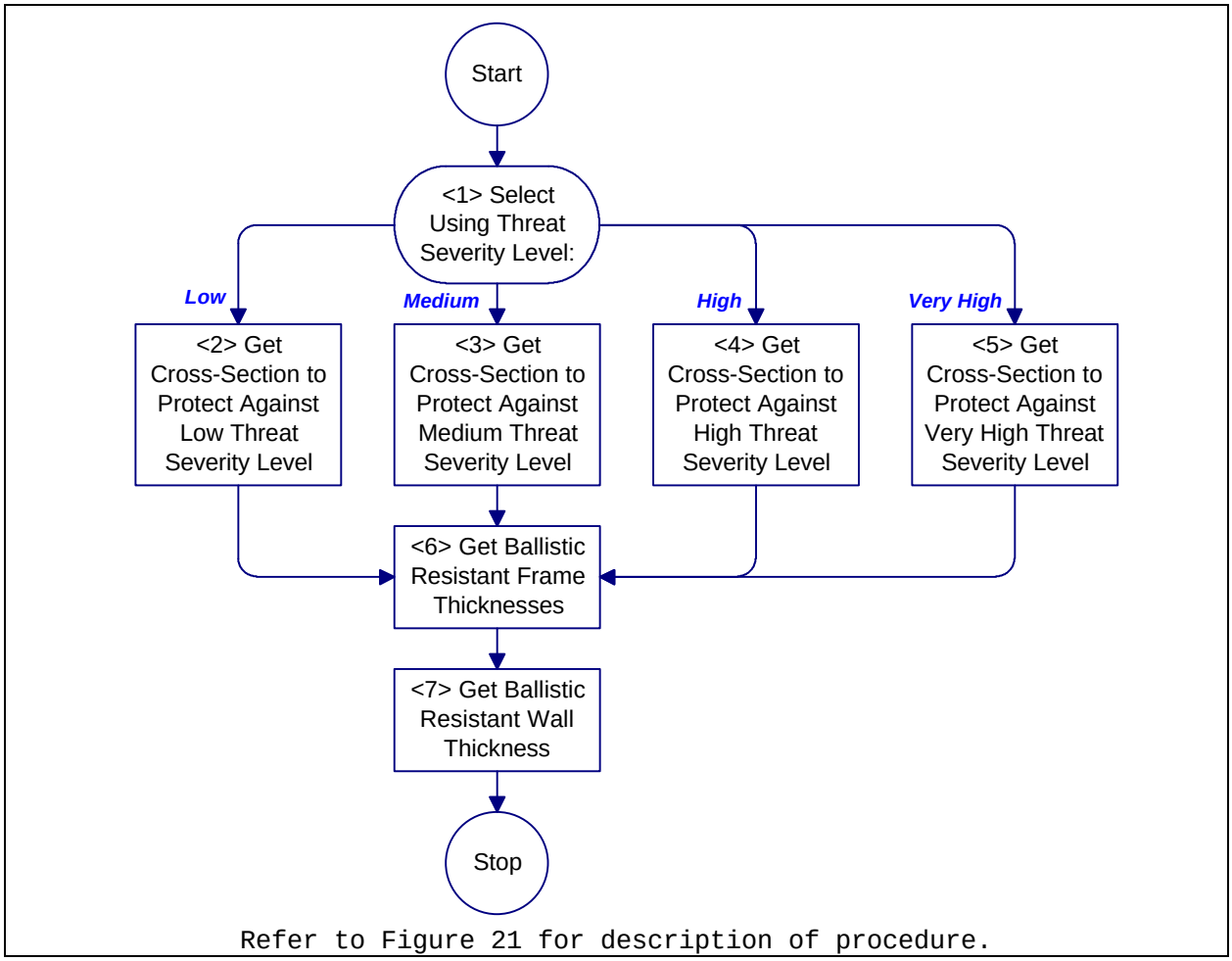


**Figure 20**
Process Chart: Ballistic Resistant Glazing Selection Procedure

<1> **Select Using Threat Severity Level.** Select a process structure on the basis of threat severity level. For a threat severity level of low, proceed to <2>. For a threat severity level of medium, proceed to <3>. For a threat severity level of high, proceed to <4>. For a threat severity level of very high, proceed to <5>.

<2> **Get Cross-Section to Protect Against Low Severity Level.** Select one or more cross-sections from Table 8. Enter the cross-section thicknesses in their appropriate rows of column (d) on the Cross-Section Selection worksheet (see Appendix B for all worksheets). Proceed to <6>.

<3> **Get Cross-Section to Protect Against Medium Severity Level.** Select one or more cross-sections from Table 9. Enter the cross-section thicknesses in their appropriate rows of column (d) on the Cross-Section Selection worksheet. Proceed to <6>.

<4> **Get Cross-Section to Protect Against High Severity Level.** Select one or more cross-sections from Table 10. Enter the cross-section thicknesses in their appropriate rows of column (d) on the Cross-Section Selection worksheet. Proceed to <6>.

<5> **Get Cross-Section to Protect Against Very High Severity Level.** Get one or more cross-sections from Table 11. Enter the cross-section thicknesses in their appropriate rows of column (d) on the Cross-Section Selection worksheet. Proceed to <6>.

<6> **Get Ballistic Resistant Frame Thicknesses.** Get frame thicknesses from Table 6. Enter the frame thicknesses in their appropriate rows of column (d) on the Frame Selection worksheet. Proceed to <8>.

<7> **Get Ballistic Resistant Wall Thickness.** Get one or more wall thicknesses from Table 7. Enter wall thicknesses in their appropriate rows of column (d) on the Wall Selection worksheet. Return to Figure 8.

**Figure 21**
Description: Ballistic Resistant Glazing Selection Procedure

5.5.1 Required Information. The following information is required for a ballistic resistant glazing selection:

a) Ballistic Tactic Design Basis Threat (medium, high, or very high). This information is determined using Appendix D and is recorded on the Glazing System Design Criteria Summary worksheet.
b) Worksheets (See Appendix B):
   1) Cross-Section Selection (CSS)
   2) Frame Selection (FS)
   3) Wall Selection (WS)

# SECTION 6: BLAST RESISTANT GLAZING

6.1 Introduction. This section provides design guidelines for frames, and two procedures to analyze the resistance of glazing systems against bomb attack. The first procedure is Bomb Attack Analysis for Evaluation Application Procedure. Use it to evaluate existing windows. The second procedure is Bomb Attack Analysis for Selection Application Procedure. Use it to select glazing systems for new construction and retrofitting existing facilities.

6.2 Levels of Protection to Resist Bomb Attack. There are two levels of protection to resist a bomb attack: low and high. Table 12 provides a summary of the protective measures for each level of protection. Refer to Table D-30 for design parameters associated with each of the threat severity levels for bomb attack.

6.2.1 Low Level of Protection. Provides resistance to collateral damage resulting from a bomb attack on a neighboring facility.

6.2.2 High Level of Protection. Provides protection to resist a bomb attack at the specified threat severity level.

**Table 12**
Protective Measures to Resist Bomb Attack

| Threat Severity Level | Level of Protection | |
|---|---|---|
| | Low | High |
| All | 1. Provide 1/4-inch (6-mm) laminated thermally tempered glass in standard frame and wall.<br>2. Minimize number and size of windows. | 1. Provide glazing system to resist threat severity level.<br>2. Minimize number and size of windows. |

6.3 Frame, Anchorage, and Wall Analysis. Providing selection and evaluation procedures for frames, anchorage, and walls is beyond the scope of this document. The analyst is advised to seek the assistance of an engineer with experience in blast overpressure analysis and design to complete an analysis of

these components. The following paragraphs provide general guidance on frame loads, anchorage design, and wall analysis.

6.3.1 Frame Loads. The window frame must develop the static design strength of the glazing pane, $r_u$. Otherwise, the design is inconsistent with frame assumptions, and the peak blast pressure capacity of the window assemblies predicted by Safevue will produce a failure rate in excess of the prescribed failure rate. This results because frame deflections induce higher principal tensile stresses in a pane, thus reducing the capacity available to safely resist the blast loading.

In addition to the load transferred to the frame by the glazing, frame members must also resist the static load, $r_u$, applied to all exposed members. Maximum allowable limits for frame design are:

a) Deflection. For glazings that rely on glass for their resistance function, no frame member should have a relative displacement exceeding 1/264th of its span or 1/8 inch (3 mm), whichever is less. For glazings that rely on polycarbonate for their resistance function, no frame member should have a relative displacement exceeding 1/100th of its span.
b) Stress. The maximum stress in any member should not exceed $f_y/1.65$, where $f_y$ is the static yield stress of the frame material obtained from its catalogued specification.
c) Fasteners. The maximum stress in any fastener should not exceed $f_y/2.00$, where $f_y$ is the static yield stress of the fastener material obtained from its catalogued specification.
d) Rotation. To ensure that early edge failure does not occur and propagate, limit rotations for glazing stops to a maximum of 0.5 degrees for monolithic glass, one degree for laminated glass, and two degrees for plastics.

Safevue automatically computes the line shears and rebound. Refer to the Safevue User’s Manual for displaying or printing this information.

6.3.1.1 Rebound. Response to the dynamic blast load will cause the window to rebound with a negative (outward) deflection. The outward pane displacement and the stress produced by the negative deflection must be safely resisted by both pane and frame. If

operational requirements dictate an operational window after a blast, the frame, connections, and wall should be designed to also resist the static frame design load, $r_u$, in the outward direction. If the window can be permitted to fail after the positive blast pressure has decayed, more economical frames can be used, as the negative static design load can be reduced to 0.67 of $r_u$. For blast durations greater than 250 msec, significant rebound does not occur during the positive pressure phase.

6.3.2 Anchorage Design. For design of frame anchorage, the analyst is referred to “Nelson® embedment properties of headed studs.”

6.3.3 Wall Loads. For design and analysis of walls subjected to blast overpressure, the analyst is referred to Naval Facilities Engineering Command (NAVFAC) P-397, Structures to Resist the Effects of Accidental Explosions. Personnel in the Waterside Structures Division of the Naval Facilities Engineering Service Center (NFESC) are available as consultants for blast overpressure design.

6.4 Blast Resistant Glazing Evaluation Procedure. This procedure helps to evaluate the performance of an existing glazing system subjected to a bomb attack. It provides a set of structures that step an analyst through analyses of the cross-section, frame, and wall. A process chart is shown in Figure 22 and a description of the procedure is presented in Figure 23.

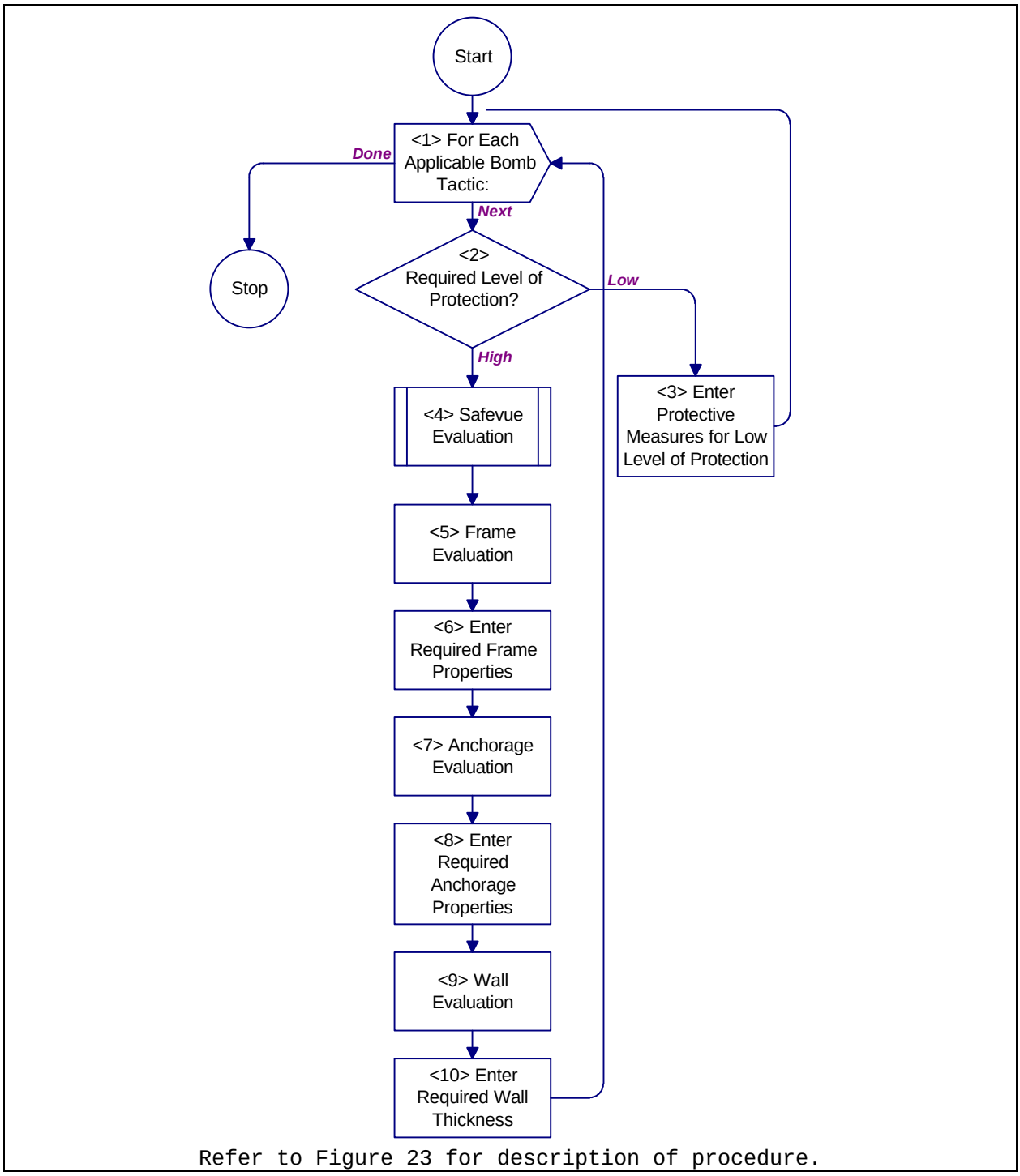


**Figure 22**
Process Chart: Blast Resistant Glazing Evaluation Procedure

<1> **For Each Applicable Bomb Tactic:** Loop through <2> through <10> for each applicable bomb tactic (i.e., stationary vehicle bomb, moving vehicle bomb or exterior). When done, return to Figure 9.

<2> **Required Level of Protection?** Use the level of protection to determine which structure to go to. For a low level of protection, proceed to <3>. For a high level of protection, proceed to <4>.

<3> **Enter Protective Measures for Low Level of Protection.** Refer to Table 12 for protective measures. In the laminated glass row of the Cross-Section Evaluation worksheet (see Appendix B for all worksheets), enter the cross-section recommended in Table 12 into column (b), (c) or (d). On the Frame Evaluation worksheet, enter the word "standard" into column (b), (c) or (d) for all frame properties. On the Wall Evaluation Application, enter the word "standard" into column (b), (c) or (d) for all wall thicknesses. Proceed to <1> for next applicable bomb tactic.

<4> **Safevue Evaluation.** Employ the computer program Safevue to analyze the glazing cross-section. Use Figure C-1 for the analysis. Proceed to <5>.

<5> **Evaluate Frame.** Providing a procedure to assist the analyst in evaluating frame performance under blast overpressure is beyond the scope of this handbook. Refer to paragraph 6.3, Frame, Anchorage and Wall Analysis, for general guidance on frame analysis. Proceed to <6>.

<6> **Enter Required Frame Properties.** Enter the required frame properties produced by the frame analysis into column (b), (c) or (d) of the Frame Evaluation worksheet. Proceed to <7>.

<7> **Evaluate Anchorage.** Providing a procedure to assist the analyst in evaluating anchorage performance under blast overpressure is beyond the scope of this handbook. Refer to paragraph 6.3, Frame, Anchorage, and Wall Analysis, for general guidance on anchorage analysis. Proceed to <8>.

<8> **Enter Required Anchorage Properties.** Enter the required anchorage properties produced by the anchorage analysis into column (b), (c) or (d) of the Anchorage Evaluation worksheet. Proceed to <9>.

<9> **Evaluate Wall.** Providing a procedure to assist the analyst in evaluating wall performance under blast overpressure is beyond the scope of this handbook. Refer to paragraph 6.3, Frame, Anchorage, and Wall Analysis, for general guidance on wall analysis. Proceed to <10>.

<10> **Enter Required Wall Thickness.** Enter the required wall thickness produced by the wall analysis into column (b), (c) or (d) of the Wall Evaluation worksheet. Proceed to <1> for next applicable bomb tactic.

**Figure 23**
Description: Blast Resistant Glazing Evaluation Procedure

6.4.1 Required Information. The following information is required for a bomb attack analysis for an evaluation application:

a) Bomb Tactic Design Basis Threat (low, medium, high, or very high). This information is determined using Appendix D and is recorded on the Glazing System Design Criteria Summary worksheet.
b) Level of Protection (low or high). This information is determined using Figure D-20 and is recorded on

the Glazing System Design Criteria Summary worksheet.

c) Worksheets (see Appendix B):
   1) Cross-Section Evaluation (CSE)
   2) Frame Evaluation (FE)
   3) Anchorage Evaluation (AE)
   4) Wall Evaluation (WE)

6.5 Blast Resistant Glazing Selection Procedure. This procedure helps to select a glazing system based on performance against bomb attacks. It provides a set of structures that step an analyst through analyses for the cross-section, frame, and wall. A process chart is shown in Figure 24 and a description of the procedure is presented in Figure 25.

6.5.1 Required Information. The following information is required for a bombs attack analysis for an selection application:

a) Bomb Tactic Design Basis Threat (low, medium, high, or very high). This information is determined using Appendix D and is recorded on the Glazing System Design Criteria Summary worksheet.
b) Level of Protection (low or high). This information is determined using Figure D-20 and is recorded on the Glazing System Design Criteria Summary worksheet.
c) Worksheets (see Appendix B):
   1) Cross-Section Selection (CSS)
   2) Frame Selection (FS)
   3) Anchorage Selection (AS)
   4) Wall Selection (WS)

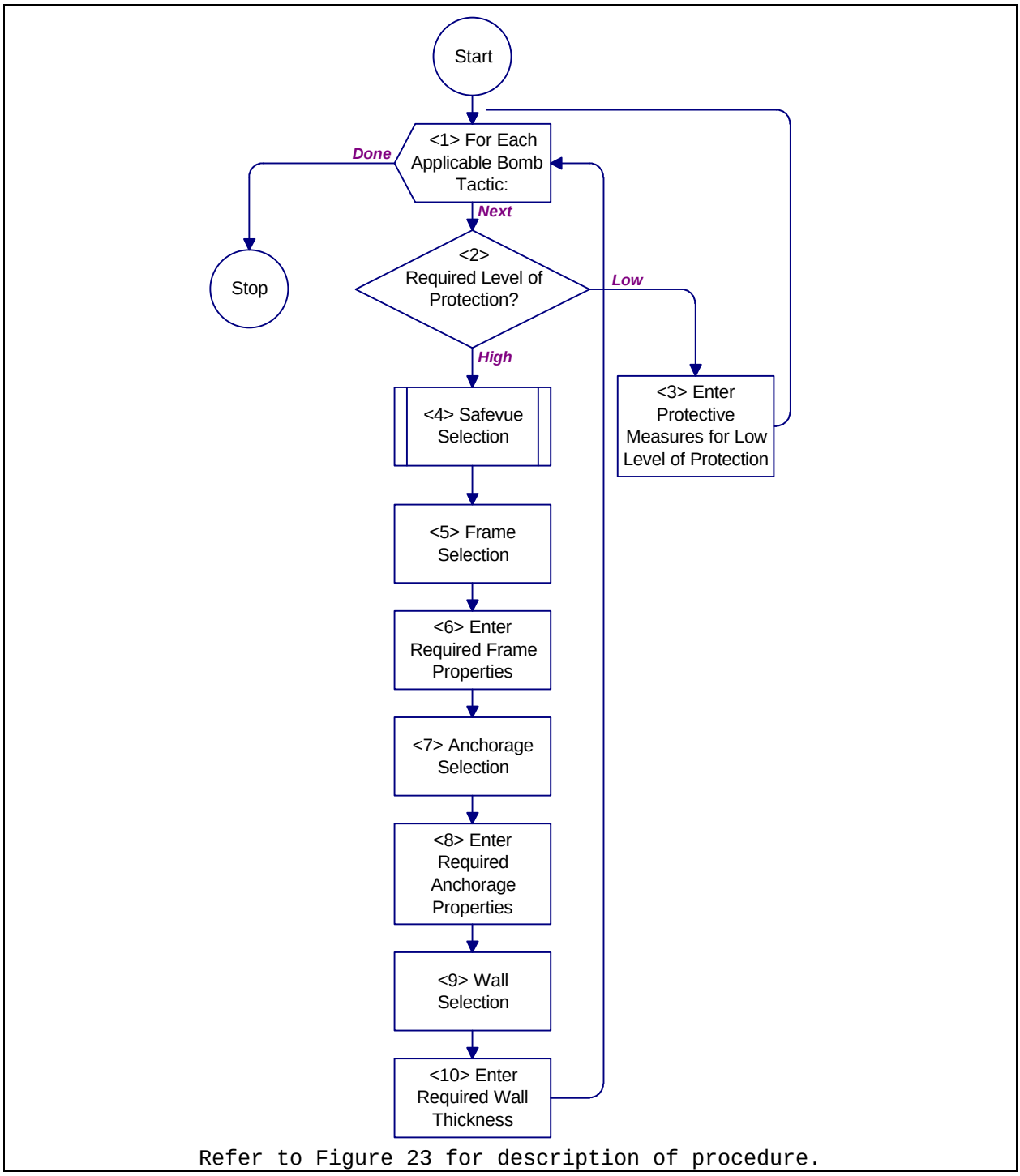


**Figure 24**
Process Chart: Blast Resistant Glazing Selection Procedure

<1> **For Each Applicable Bomb Tactic:** Loop through <2> through <10> for each applicable bomb tactic (i.e., stationary vehicle bomb, moving vehicle bomb or exterior). When done, return to Figure 9.

<2> **Required Level of Protection?** Use the level of protection to determine which structure to go to. For a low level of protection, proceed to <3>. For a high level of protection, proceed to <4>.

<3> **Enter Protective Measures for Low Level of Protection.** Refer to Table 12 for protective measures. In the laminated glass row of the Cross-Section Selection worksheet (see Appendix B for all worksheets), enter the cross-section recommended in Table 12 into column (a), (b) or (c). On the Frame Evaluation worksheet, enter the word "standard" into column (a), (b) or (c) for all frame properties. On the Wall Evaluation worksheet, enter the word "standard" into column (a), (b) or (c) for all wall thicknesses. Proceed to <1> for next applicable bomb tactic.

<4> **Safevue Selection.** Employ the computer program Safevue to analyze the glazing cross-section. Use Figure C-13 for the analysis. Proceed to <5>.

<5> **Frame Selection.** Providing a procedure to assist the analyst in evaluating frame performance under blast overpressure is beyond the scope of this handbook. Refer to paragraph 6.3, Frame, Anchorage, and Wall Analysis, for general guidance on frame analysis. Proceed to <6>.

<6> **Enter Required Frame Properties.** Enter the required frame properties produced by the frame analysis into column (a), (b) or (c) of the Frame Selection worksheet. Proceed to <7>.

<7> **Anchorage Selection.** Providing a procedure to assist the analyst in evaluating anchorage performance under blast overpressure is beyond the scope of this handbook. Refer to paragraph 6.3, Frame, Anchorage, and Wall Analysis, for general guidance on anchorage analysis. Proceed to <8>.

<8> **Enter Required Anchorage Properties.** Enter the required anchorage properties produced by the anchorage analysis into column (b), (c) or (d) of the Anchorage Selection worksheet. Proceed to <9>.

<9> **Wall Selection.** Providing a procedure to assist the analyst in evaluating wall performance under blast overpressure is beyond the scope of this handbook. Refer to paragraph 6.3, Frame, Anchorage, and Wall Analysis, for general guidance on wall analysis. Proceed to <10>.

<10> **Enter Required Wall Thickness.** Enter the required wall thickness produced by the wall analysis into column (a), (b) or (c) of the Wall Selection worksheet. Proceed to <1> for next applicable bomb tactic.

**Figure 25**
Description: Blast Resistant Glazing Selection Procedure

# SECTION 7: FORCED ENTRY RESISTANT GLAZING

7.1 Introduction. This section provides a process for analyzing the forced entry attack resistance of glazing systems to establish minimum requirements. The section provides two procedures for forced entry attack analysis, the first is for selection applications and the second is for evaluation applications. Use the Forced Entry Resistant Glazing Selection procedure to choose glazing systems for new construction or retrofitting an existing facility. Use the Forced Entry Resistant Glazing Evaluation procedure to analyze existing windows.

7.2 Levels of Protection to Resist Forced Entry Attack. For security glazing, there are two levels of protection to resist a forced entry attack as shown in Table 13: low and medium. Glazing systems cannot provide high or very high levels of protection against a forced entry attack. Refer to Table D-30 for design parameters associated with each of the threat severity levels for forced entry attack.

7.2.1 Low Level of Protection. Eliminates possibility of quiet cutting or single blow breakage from small tools, rocks, or bricks (i.e., smash and grab tactic).

7.2.2 Medium Level of Protection. Glazing will provide protection equivalent to that of wall cross-section. The analyst is referred to MIL-HDBK-1013/1A for wall design procedures that resist forced entry attack.

7.3 Forced Entry Resistant Glazing Selection Procedure. This procedure aids an analyst by providing structures that establish minimum glazing specifications for forced entry attack severity levels. Figure 26 presents a process chart and Figure 27 provides a description of the procedure.

**Table 13**
Protective Measures to Resist Forced Entry Attack

| Threat Severity Level | Level of Protection | |
|---|---|---|
| | Low | Medium |
| Low | 1. Provide 1/4-inch (6-mm) | 1. Provide glazing system to |

| | | |
|---|---|---|
| | laminated strengthened glass in standard frame.<br>2. Minimize number of windows. | resist low threat severity level.<br>2. Minimize number of windows. |
| Medium, High, and Very High | 1. Provide 1/4-inch (6-mm) laminated strengthened glass in standard frame.<br>2. Minimize number of windows. | 1. Provide glazing system to resist medium threat severity level.<br>2. Minimize number of windows. |

7.3.1 Required Information. The following information is required for a forced entry analysis for selection application:

a) Forced Entry Tactic Design Basis Threat (medium, high, or very high). This information is determined using Appendix D and is recorded on the Glazing System Design Criteria Summary worksheet.
b) Level of Protection (low or medium). This information is determined using Figure D-20 and is recorded on the Glazing System Design Criteria Summary worksheet.
c) Worksheets (see Appendix B):
    1) Cross-Section Selection (CSS)
    2) Frame Selection (FS)
    3) Anchorage Selection (AS)
    4) Wall Selection (WS)

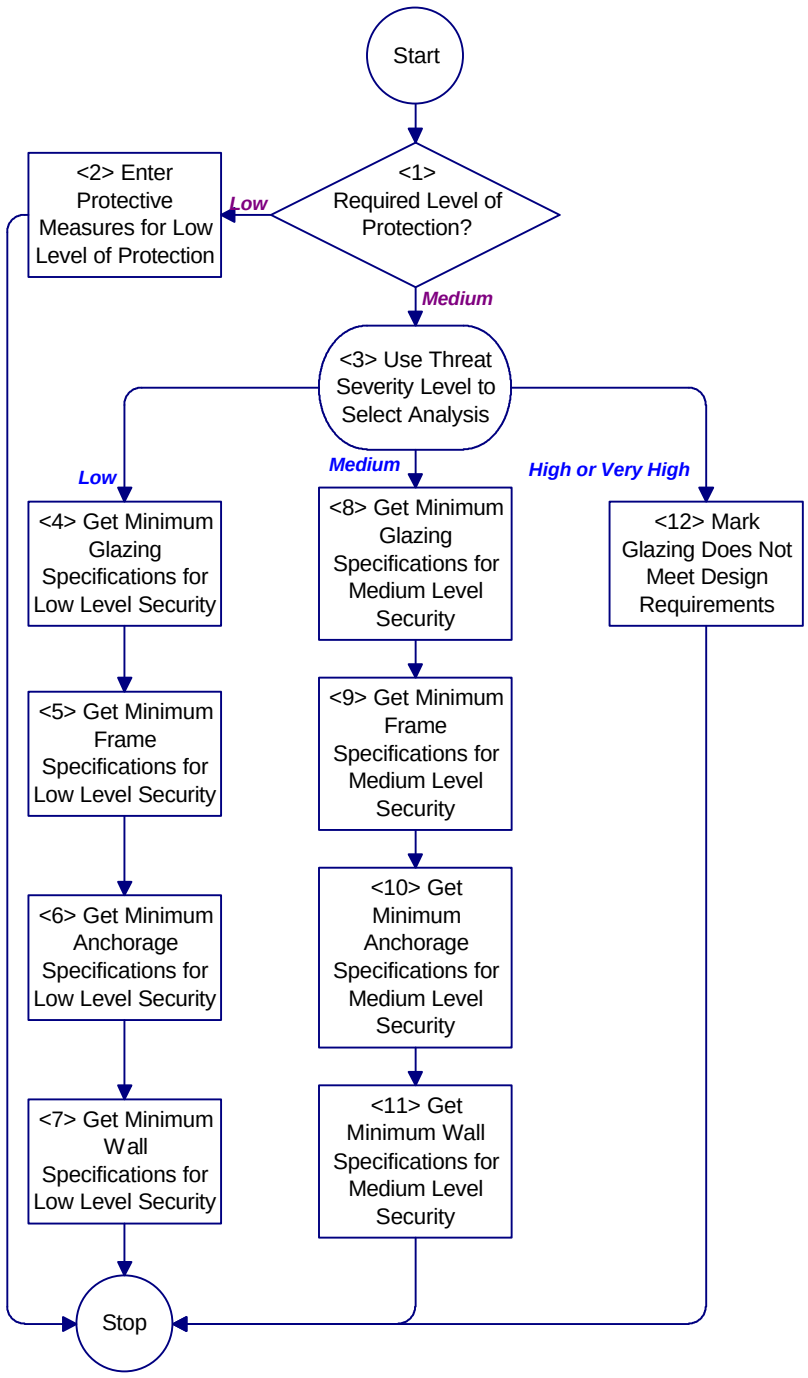


Refer to Figure 27 for description of procedure.

**Figure 26**
Process Chart: Forced Entry Resistant Glazing Selection Procedure

<1> **Required Level of Protection?** Use the level of protection to determine which structure to go to. For a low level of protection, proceed to <2>. For a medium level of protection, proceed to <3>.

<2> **Enter Protective Measures for Low Level of Protection.** Refer to Table 13 for protective measures. In the laminated glass row of the Cross-Section Selection worksheet (see Appendix B for all worksheets), enter the cross-section recommended in Table 13 into column (e). On the Frame Selection worksheet, enter the word "standard" into column (e) for all frame properties. On the Wall Selection worksheet, enter the word "standard" into column (e) for all wall thicknesses. Return to Figure 8.

<3> **Use Threat Severity Level to Select Analysis.** This is a multiple choice type selection. Follow the path that corresponds to the appropriate threat severity level: low, medium or high. If the threat severity level is low, proceed to <4>. If the level is medium, proceed to <8>. If the level is high or very high, proceed to <12>.

<4> **Get Minimum Glazing Specifications for a Low Threat Severity Level.** Refer to Table 14 for the minimum glazing specifications for low threat severity level requirements. Enter these specifications in column (e) of the Cross-Section Selection worksheet. Proceed to <5>.

<5> **Get Minimum Frame Specifications for Low Threat Severity Level.** Refer to Table 15 for minimum frame specifications that meet low threat severity level requirements. Enter these specifications in column (e) of the Frame Selection worksheet. Proceed to <6>.

<6> **Get Minimum Anchorage Specifications for Low Threat Severity Level.** Refer to Table 16, Table 17, Table 18, and Table 19 for minimum anchorage specifications that meet low threat severity level requirements. Enter these specifications in column (e) of the Anchorage Selection worksheet. Proceed to <7>.

<7> **Get Minimum Wall Specifications for Low Threat Severity Level.**

<8> Table **20** provides the minimum wall thicknesses that meet low threat severity level requirements. Enter these specifications in column (e) of the Wall Selection worksheet. This step completes the forced entry attack analysis for selection application procedure. Return to Figure 8.

<9> **Get Minimum Glazing Specifications for Medium Level Security.** Refer to Table 21 for minimum glazing specifications that meet medium threat severity level requirements. Enter these specifications in column (e) of the Cross-section Selection worksheet. Proceed to <9>.

<10> **Get Minimum Frame Specifications for Medium Level Security.** Refer to Table 22 for minimum frame specifications that meet medium threat severity level requirements. Enter these specifications in column (e) of the Frame Selection worksheet. Proceed to <10>.

<11> **Get Minimum Anchorage Specifications for Medium Level Security.** Refer to Table **23**, Table 24, Table 25, and Table 26 for minimum anchorage specifications that meet medium threat severity level requirements. Enter these specifications in column (e) of the Anchorage Selection worksheet. Proceed to <11>.

<12> **Get Minimum Wall Specifications for Medium Level Security.** Table 27 provides minimum wall thicknesses that meet medium threat severity level requirements. Enter these specifications in column (e) of the Wall Selection worksheet. This completes the forced entry attack analysis for selection application procedure. Return to Figure 8.

<13> **Mark Glazing Does Not Meet Design Requirements.** Glazing will not protect against a high or very high level forced entry attack. Requirements must be changed to use glazing in this application. Mark the "No" checkbox in response to the question "Does Glazing Cross-Section Meet Design Requirements?" at the bottom of the Cross-Section Selection Worksheet. This completes the forced entry attack for selection application procedure. Return to Figure 8.

**Figure 27**
Description: Forced Entry Resistant Glazing Selection Procedure

**Table 14**
Minimum Glazing Specifications for Low Threat Severity Level

| Type | Minimum Thickness, inch (mm) | Cross-Section, inch (mm) | Figure |
|---|---|---|---|
| Air Gap | 1 (25) | 1/4 (6) LAM[a] Ag[b], 1/4 (6) AIR, 1/2 (13) LAM POLY[c] | Figure F-3 |
| Extruded Ionomer | 13/16 (20) | 3/16 (5) AG, 1/2 (13) IONOMER[d], 1/8 (3) AG | Figure F-8 |
| Glass-Clad Polycarbonate | 11/16 (17) | 3/16 (5) AG, 3/8 (10) POLY, 3/16 (5) AG | Figure F-12 |
| Monolithic Polycarbonate | 3/8 (12) | 3/8 (10) POLY | N/A[e] |

[a] Laminated
[b] Annealed glass
[c] Polycarbonate
[d] Extruded ionomer
[e] Not applicable

**Table 15**
Minimum Frame Specifications for Low Threat Severity Level

| Item | Size, inch |
|---|---|
| Minimum Frame Thickness | 1/4 (6 mm) steel |
| Minimum Removable Stop Thickness | 3/16 (5 mm) steel |
| Minimum Bite Depth | 1 (25 mm) |
| Minimum Glazing Rabbet Depth | 1-1/4 (32 mm) |
| Maximum Width Between Frame Members | 42 (1.1 meter) |

**Table 16**
Minimum Anchorage Size for Low Threat Severity Level

| Anchor Bolt | Minimum Diameter, inch (mm) | Minimum Embedment, inch (mm) |
|---|---|---|
| Lag Bolt | 3/8 (9) | 3 (76) |

**Table 17**
Lag Bolt Maximum Spacing for Low Threat Severity Level

| Space | Maximum Spacing, inch (mm) |
|---|---|
| Frame Corner to Bolt | 9 (230) |
| Between Adjacent Bolts | 18 (460) |

**Table 18**
Removable Stop Anchorage Size for Low Threat Severity Level

| Bolt Type | Minimum Size, | Minimum Number Per Side |
|---|---|---|

| | inch (mm) | |
|---|---|---|
| Shouldered | 3/8 (10) | 2 |

**Table 19**
Removable Stop Bolt Maximum Spacing for Low Threat Severity Level

| Space | Maximum Spacing, inch (mm) |
|---|---|
| Frame Corner to Bolt | 9 (230) |
| Between Adjacent Bolts | 18 (460) |

**Table 20**
Minimum Wall Thicknesses for Low Threat Severity Level

| Wall Construction | Minimum Wall Thickness inch (mm) |
|---|---|
| Wood Frame | Refer to Table 1 for details of wood frame construction |
| Reinforced Grout-Filled Concrete Block | 6 (150) |
| Reinforced Concrete | 4 (100) |

**Table 21**
Minimum Glazing Specifications for Medium Threat Severity Level

| Type | Minimum Thickness, inch (mm) | Minimum Thickness, inch (mm) | Figure |
|---|---|---|---|
| Air Gap | 1-3/4 (44) | 1/4 (6) LAM[a] AG[b], 1/4 (6) AIR, 1-1/8 (28) LAM POLY[c] | Figure F-6 |
| Extruded Ionomer | 2-1/8 (54) | 7/8 (22) LAM AG, 1 (25) IONOMER[d], 3/32 (4) AG | Figure F-9 |
| Glass-Clad Polycarbonate | 15/16 (24) | 3/16 (5) SG[e], 1/4 (6) AG, 3/8 (9) LAM POLY | Figure F-14 |
| Laminated Polycarbonate | 1-1/4 (32) | 1-1/4 (32) LAM POLY | Figure F-31 |

[a] Laminated
[b] Annealed glass
[c] Polycarbonate
[d] Extruded ionomer
[e] Strengthened glass

**Table 22**
Minimum Frame Specification for Medium Threat Severity Level

| Item | Size, inch |
|---|---|
| Mimimum Frame Thickness | 1/4 (6 mm) steel |
| Minimum Removable Stop Thickness | 3/16 (5 mm) steel |
| Minimum Bite Depth | 1 (25 mm) |
| Minimum Glazing Rabbet Depth | 1-1/4 (32 mm) |
| Maximum Width Between Frame Members | 42 (1.1 meter) |

**Table 23**
Minimum Anchorage Size for Medium Threat Severity Level

| Anchor Bolt | Minimum Diameter, inch (mm) | Minimum Embedment, inch (mm) |
|---|---|---|
| One-Piece Expansion Sleeve | 1/2 (13) | 3 (76) |
| Taper Bolt | 3/8 (10) | 3 (76) |

**Table 24**
Concrete Anchor Bolt Maximum Spacing for Medium Threat Severity Level

| Space | Maximum Spacing, inch (mm) |
|---|---|
| Frame Corner to Bolt | 6 (150) |
| Between Adjacent Bolts | 12 (300) |

**Table 25**
Removable Stop Anchorage Size for Medium Threat Severity Level

| Bolt Type | Minimum Size, inch (mm) | Minimum Number Per Side |
|---|---|---|
| Shouldered | 3/8 (10) | 2 |

**Table 26**
Removable Stop Bolt Spacing for Medium Threat Severity Level

| Space | Maximum Spacing, inch (mm) |
|---|---|
| Frame Corner to Bolt | 9 (230) |
| Between Adjacent Bolts | 18 (460) |

**Table 27**
Minimum Wall Thicknesses for Medium Threat Severity Level

| Wall Construction | Minimum Wall Thickness, inch (mm) |
|---|---|
| Reinforced Grout-Filled Concrete Block | 8 (200) |
| Reinforced Concrete | 6 (150) |

7.4 Forced Entry Resistant Glazing Evaluation Procedure. This procedure aids an analyst by providing structures that step through the process of evaluating a glazing system’s performance against forced entry attack. Figure 28 presents a process chart and Figure 29 provides a description of the procedure.

7.4.1 Required Information. The following information is required for a forced entry analysis for evaluation application:

a) Forced Entry Tactic Design Basis Threat (medium, high, or very high). This information is determined using Appendix D and is recorded on the Glazing System Design Criteria Summary worksheet.
b) Level of Protection (low or medium). This information is determined using Figure D-20 and is recorded on the Glazing System Design Criteria Summary worksheet.
c) Material types and thicknesses in glazing cross-section
d) Frame thickness
e) Removable stop thickness
f) Bite depth
g) Rabbet depth
h) Anchor bolt type
i) Anchor bolt diameter
j) Anchor bolt embedment
k) Material types and thicknesses in wall cross-section
l) Worksheets (see Appendix B):
    1) Cross-Section Evaluation (CSE)
    2) Frame Evaluation (FE)
    3) Anchorage Evaluation (AE)
    4) Wall Evaluation (WE)

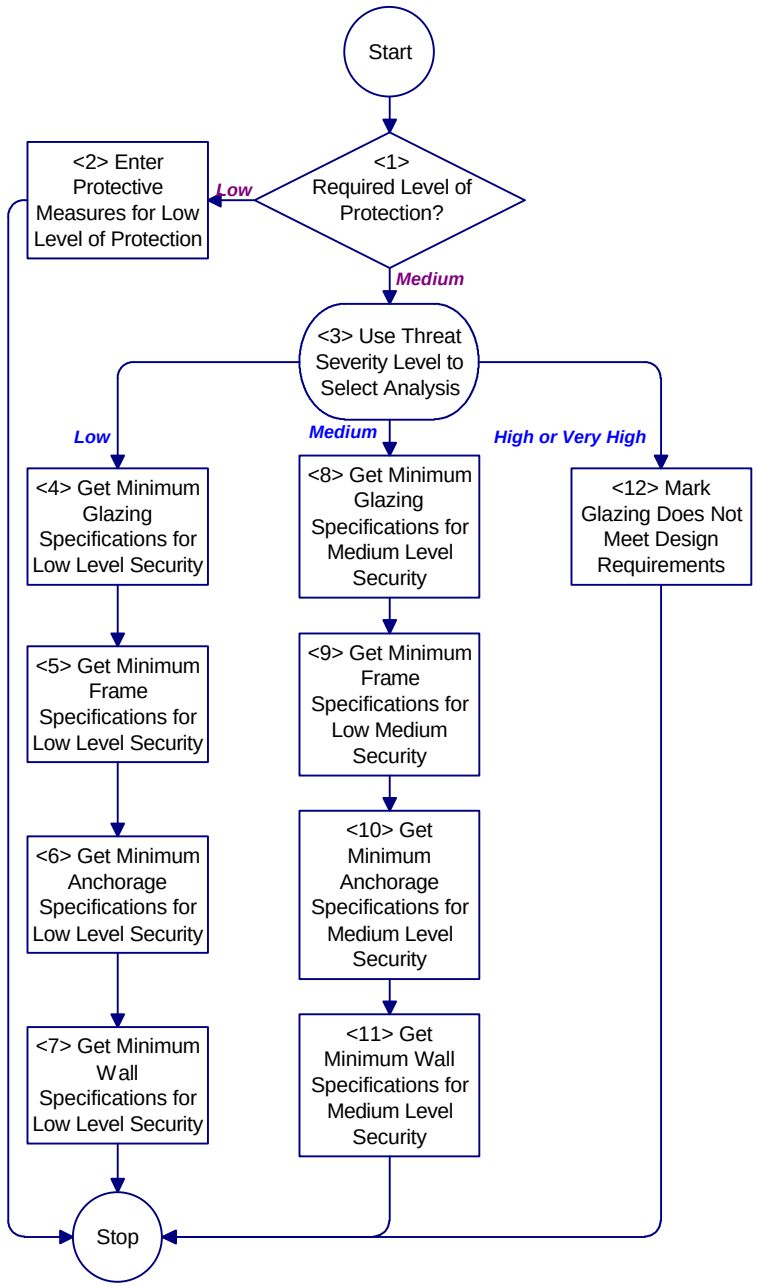


Refer to Figure 29 for description of procedure.

**Figure 28**
Process Chart: Forced Entry Resistant Glazing Evaluation Procedure

<1> **Required Level of Protection?** Use the level of protection to determine which structure to go to. For a low level of protection, proceed to <2>. For a medium level of protection, proceed to <3>.

<2> **Enter Protective Measures for Low Level of Protection.** Refer to Table 13 for protective measures. In the laminated glass row of the Cross-Section Evaluation worksheet (see Appendix B for all worksheets), enter the cross-section recommended in Table 13 into column (f). On the Frame Evaluation worksheet, enter the word "standard" into column (f) for all frame properties. On the Wall Evaluation worksheet, enter the word "standard" into column (f) for all wall thicknesses. Return to Figure 9.

<3> **Use Threat Severity Level to Select Analysis.** This is a multiple choice type selection. Follow the path that corresponds to the attack level: low, medium, or high. If the attack level is low, proceed to <4>. If the attack level is medium, proceed to <8>. If the attack level is high, proceed to <11>.

<4> **Get Minimum Glazing Specifications for Low Level Security.** Refer to Table 14 for the minimum glazing specifications for low threat severity level requirements. Enter these specifications in column (f) of the Cross-Section Evaluation worksheet. Proceed to <5>

<5> **Get Minimum Frame Specifications for Low Level Security.** Refer to Table 15 for minimum frame specifications that meet low threat severity level requirements. Enter these specifications in column (f) of the Frame Evaluation worksheet. Proceed to <6>.

<6> **Get Minimum Anchorage Specifications for Low Level Security.** Refer to Table 16, Table 17, Table 18, and Table 19 for minimum anchorage specifications that meet low threat severity level requirements. Enter these specifications in column (f) of the Anchorage Evaluation worksheet. Proceed to <7>

<7> **Get Minimum Wall Specifications for Low Level Security.**

<8> Table **20** provides the minimum wall thicknesses that meet low threat severity level requirements. Enter these specifications in column (f) of the Wall Evaluation worksheet. This step completes the forced entry attack analysis for evaluation application procedure. Return to Figure 9.

<9> **Get Minimum Glazing Specifications for Medium Level Security.** Refer to Table 21 for minimum glazing specifications that meet medium threat severity level requirements. Enter these specifications in column (f) of the Cross-Section Evaluation worksheet. Proceed to <9>.

<10> **Get Minimum Frame Specifications for Medium Level Security.** Refer to Table 22 for minimum frame specifications that meet medium threat severity level requirements. Enter these specifications in column (f) of the Frame Selection worksheet. Proceed to <10>.

<11> **Get Minimum Anchorage Specifications for Medium Level Security.** Refer to Table **23**, Table 24, Table 25, and Table 26 for minimum anchorage specifications that meet medium threat severity level requirements. Enter these specifications in column (f) of the Anchorage Evaluation worksheet. Proceed to <11>.

<12> **Get Minimum Wall Specifications for Medium Level Security.** Table 27 provides minimum wall thicknesses that meet medium threat severity level requirements. Enter these specifications in column (f) of the Wall Evaluation worksheet. This completes the forced entry attack analysis for evaluation application procedure. Return to Figure 9.

<13> **Mark Glazing Does Not Meet Minimum Specifications.** Glazing will not protect against a high or very high severity level forced entry attack. Mark the "No" check box in response to the question "Does Glazing Cross-Section Meet Design Requirements?" at the bottom of the Cross-Section Evaluation Worksheet. Return to Figure 9.

**Figure 29**

Description: Forced Entry Resistant Glazing Evaluation Procedure

# SECTION 8: ENVIRONMENTAL ANALYSIS

8.1 Introduction. An environment can directly affect a glazing system's protective characteristics. This section addresses those effects that are derogatory in nature and provides recommended minimum requirements for offsetting any negative impact of environment.

8.2 Environmental Analysis Procedure. This procedure covers exterior environments, high traffic conditions, and high humidity for glass-clad polycarbonate, polycarbonate, and laminated glass. Figure 30 presents a process chart and Figure 31 contains a description for the environmental analysis procedure.

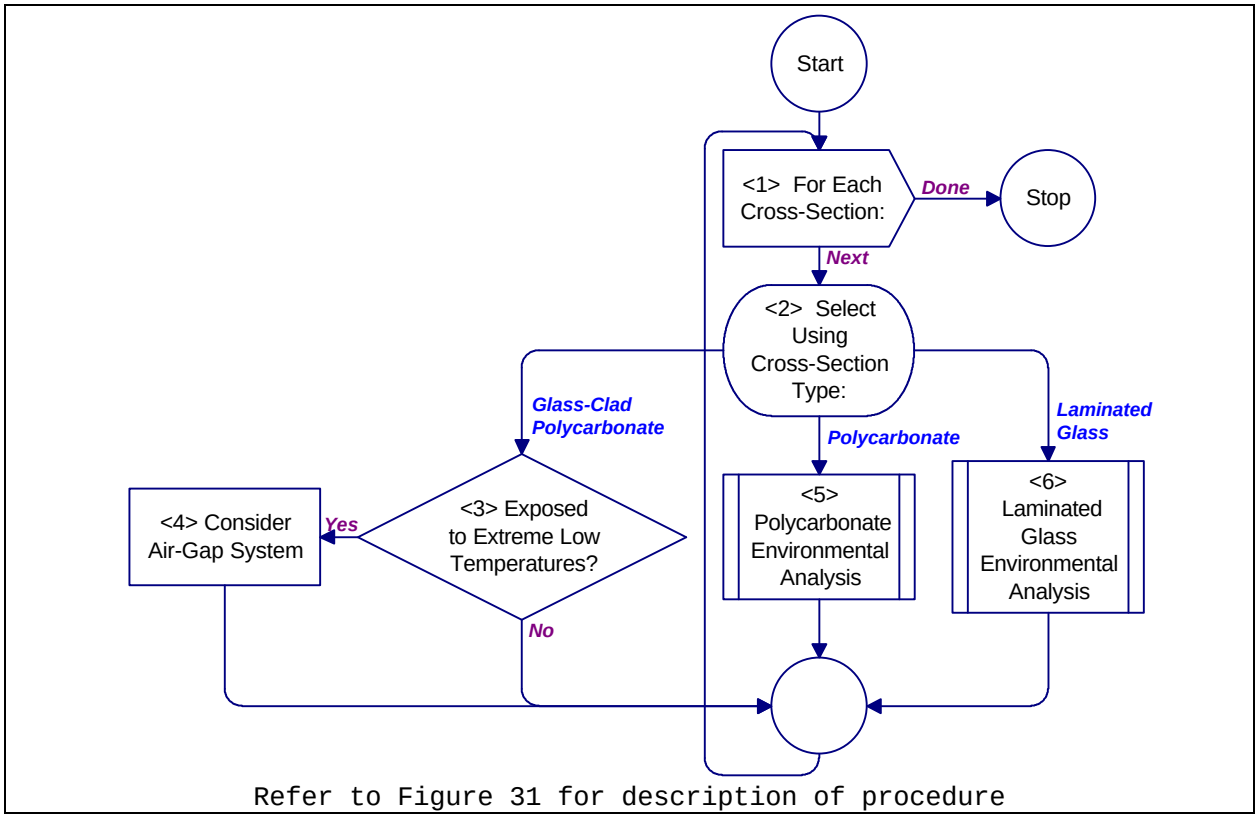


**Figure 30**
Process Chart: Environmental Analysis Procedure

8.2.1 Required Information. The following information is required for the environmental analysis procedure:

a) Traffic level (high or low). This represents the number of people working or moving through an area.
b) Exposure to extreme temperatures
c) Worksheets (see Appendix B):
    1) Cross-Section Selection (CSS)
    2) Cross-Section Evaluation (CSE)

<1> **For Each Cross-Section:** Do <2> through <5> for each cross-section on the Cross-Section Selection or Cross-section Evaluation worksheet (see Appendix B for all worksheets). If this is an analysis for a selection application, return to Figure 6. Otherwise, return to Figure 7.
<2> **Select Using Cross-Section Type:** Select the next structure by type of cross-section. For a glass-clad polycarbonate cross-section, proceed to <3>. For a polycarbonate cross-section, proceed to <5>. For a laminated glass cross-section, proceed to <6>.
<3> **Exposed to Extreme Low Temperatures?** If cross-section is exposed to temperatures of 0°F or lower for at least 20% of the time, proceed to <4>. Otherwise, proceed to <1> for next cross-section.
<4> **Consider Air-Gap System.** Consider using an air-gap system to avoid temperature-induced stresses at the glass to polycarbonate interface. Proceed to <1> for next cross-section.
<5> **Polycarbonate Environmental Analysis:** Analyze environmental effects for a polycarbonate cross-section using Figure 32. Proceed to <1> for next cross-section.
<6> **Laminated Glass Environmental Analysis.** Analyze environmental effects for a laminated glass cross-section using Figure 33. Proceed to <1> for next cross-section.

**Figure 31**
Description: Environmental Analysis Procedure

8.3 Polycarbonate Environmental Analysis Procedure. This procedure covers high humidity, high traffic conditions, and vandalism for polycarbonate. Figure 32 presents a process chart description for the polycarbonate environmental analysis procedure.

8.3.1 Required Information. The following information is required for the polycarbonate environmental analysis procedure:

a) Traffic level (high or low). This represents the number of people working or moving through an area.
b) Humidity level (high or low)
c) Exposure to extreme temperatures
d) Worksheets (see Appendix B):
    1) None

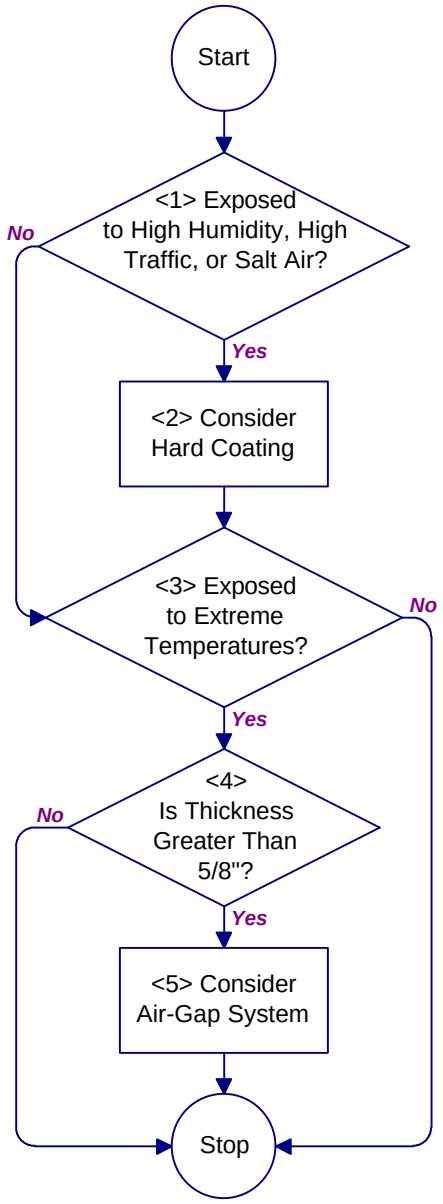


<1> **Exposed to High Humidity, High Traffic, or Salt Air?** If a polycarbonate cross-section is exposed to conditions of high humidity, high traffic, or salt air, proceed to <2>. Otherwise, proceed to <3>.

<2> **Consider Hard Coating.** Hard coating the surface of polycarbonate can protect it from abrasion and contaminant penetration. Proceed to <3>.

<3> **Exposed to Extreme Temperatures?** If a polycarbonate cross-section is exposed to temperature differentials in excess of 70°F then proceed to <4>. Otherwise, return to Figure 30.

<4> **Is Thickness Greater Than 5/8"?** For thicknesses of polycarbonate greater than 5/8 inch exposed to extreme temperatures, proceed to <5>. Otherwise, return to Figure 30.

<5> **Consider Air-Gap System.** Extreme temperature differentials and large thicknesses can produce bending stresses in polycarbonate that will lead to delamination. An air-gap will reduce the temperature differential through the polycarbonate material. Return to Figure 30.

**Figure 32**
Process Chart and Description: Polycarbonate Environmental Analysis Procedure

8.4 Laminated Glass Environmental Analysis Procedure. This procedure provides guidance for cold temperature applications of laminated glass. Figure 33 presents the process chart and description for the laminated glass environmental analysis procedure.

8.4.1 Required Information. The following information is required for the laminated glass environmental analysis procedure:

a) Exposure to extreme low temperatures
b) Interlayer material type for cross-sections containing laminated glass
c) Worksheets (see Appendix B):
   1) None

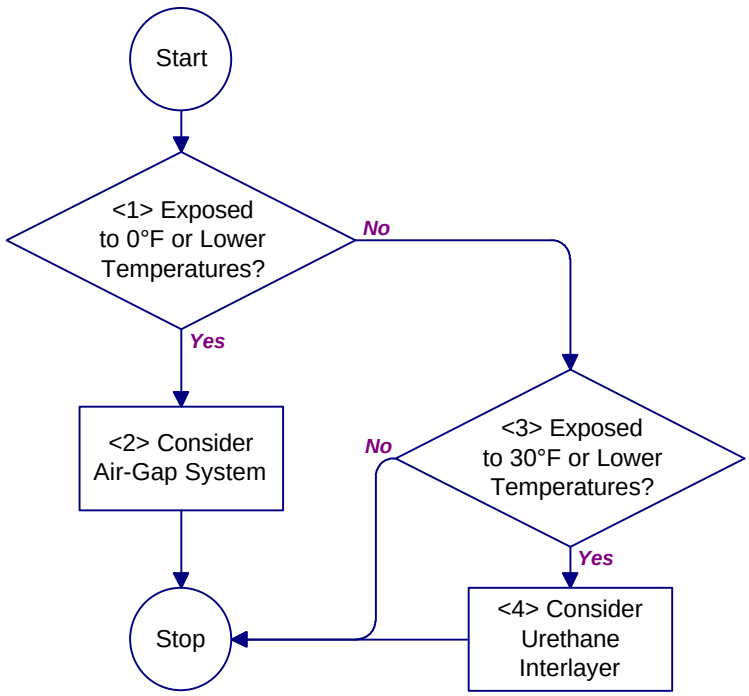


<1> **Exposed to 0°F or Lower Temperatures?** If the cross-section is exposed to temperatures below 0°F, proceed to <2>. Otherwise, proceed to <3>.

<2> **Consider Air-Gap System.** Consider using an air-gap system that will minimize exposure of the interlayer material to extreme temperatures. Also, consider replacing PVB interlayer with a urethane interlayer that will remain flexible at lower temperatures. Return to Figure 30.

<3> **Exposed to 30°F or Lower Temperatures.** If the cross-section is exposed to temperatures below 30°F, proceed to <4>, Otherwise return to Figure 30.

<4> **Consider Urethane Interlayer.** Consider replacing PVB interlayer with a urethane interlayer that will remain flexible at lower temperatures. Return to Figure 30.

**Figure 33**
Process Chart and Description: Laminated Glass Environmental Analysis Procedure

# SECTION 9: COST ANALYSIS

9.1 Introduction. This section provides a process for estimating the cost of glazing systems to aid in evaluating performance trade-offs. The process addresses costs for cross-sections, frames, anchorage, installation, and life cycle. Worksheets are provided to simplify the process.

9.2 Cost Estimate Procedure. Figure 34 presents a process chart and provides a description of the procedure. The procedure involves determining estimates for three components of and two operations related to security glazing systems. These estimates are combined to form a life cycle cost estimate.

9.2.1 Required Information. The following information is required for a cost estimate:

a) Glazing systems. This information is determined using Figure 8 for a selection application or Figure 9 for an evaluation application. This information is recorded on the Cross-Section Selection worksheet or the Cross-Section Evaluation worksheet.
b) Worksheets (see Appendix B):
    1) None

9.3 Cross-Section Cost Estimate Procedure. This procedure assists an analyst in computing an estimate for a cross-section's material and fabrication costs. Material costs are computed on a per unit area or per unit length basis. Fabrication costs account for material size and weight. Figure 35 presents a process chart and a description of the procedure.

9.3.1 Required Information. The following information is required for a cross-section cost estimate:

a) Worksheets (see Appendix B):
    1) Cross-Section Cost Factor (CSCF)

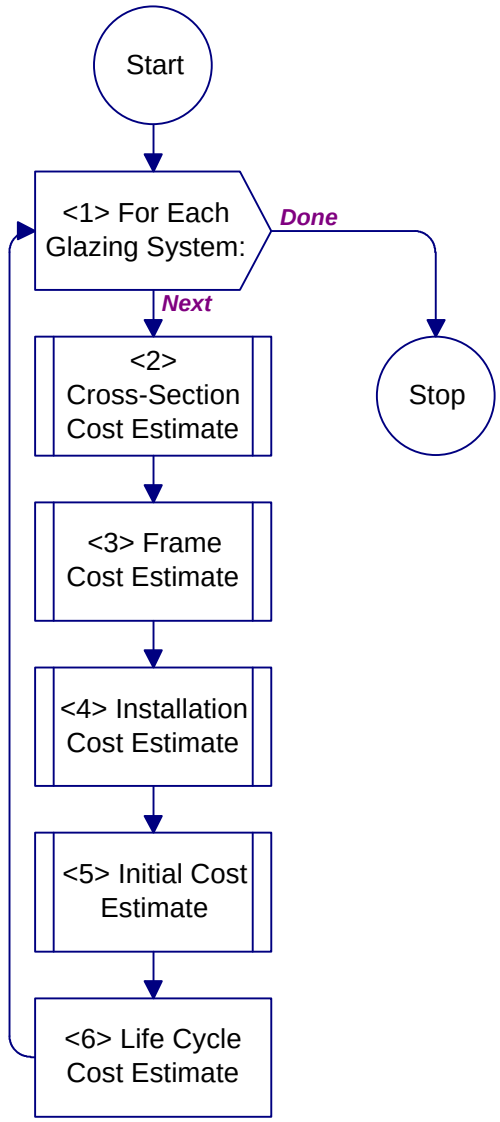


<1> **For Each Glazing System:.** For each glazing system under consideration estimate the costs of the cross-section, frame, installation, and life cycle. Proceed to <2> for next glazing system. When done, return to Figure 6.

<2> **Cross-Section Cost Estimate.** Estimate cost of a cross-section using Figure 35. Proceed to <3>.

<3> **Frame Cost Estimate.** Estimate cost of frame using Figure 39. Proceed to <4>.

<4> **Installation Cost Estimate.** Estimate cost of installation using Figure 40. Proceed to <5>.

<5> **Initial Cost Estimate.** Combine the cross-section, frame, and installation costs to determine the initial cost of glazing. Use Figure 41 to estimate an initial cost. Proceed to <6>.

<6> **Life Cycle Cost Estimate.** Estimating the life cycle cost of glazing systems is a complex process that involves procedures beyond the scope of this handbook. The analyst is advised to use NAVFAC P-442, Economic Analysis Handbook, in conducting a life cycle cost analysis. Proceed to <1>.

**Figure 34**
Process Chart and Description: Cost Estimate Procedure

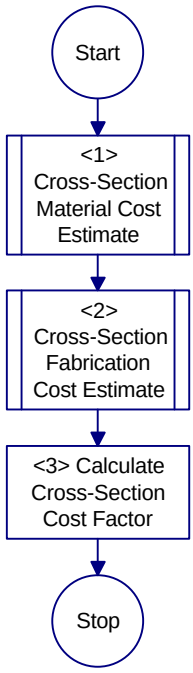


<1> **Cross-Section Material Cost Estimate.** Estimate the cost of material employed in the cross-section using Figure 36. Proceed to <2>.

<2> **Cross-Section Fabrication Cost Estimate.** Estimate the cost of labor and equipment to bond glazing layers and finish the cross-section using Figure 37. Proceed to <3>.

<3> **Calculate Cross-Section Cost Factor.** Multiply fields (r), (s), (t), and (u) of the Cross-Section Cost Factor worksheet (see Appendix B for all worksheets) together and put the sum in field (v) and in column (a) of the cross-section row of the Initial Cost worksheet. This structure completes the Cross-Section Cost Estimate Procedure. Return to Figure 34.

**Figure 35**
Process Chart and Description: Cross-Section Cost Estimate Procedure

9.4 Cross-Section Material Cost Estimate Procedure. This procedure provides cost factors for materials in a glazing cross-section. The procedure builds a cost factor based on individual layers and interlayers. Figure 36 presents a process chart and description of the procedure.

9.4.1 Required Information. The following information is required for a cross-section material cost estimate:

a) Material type of each cross-section layer
b) Thickness of each cross-section layer
c) Location of interlayers in cross-section
d) Material type of each interlayer
e) Number of windows
f) Height of window
g) Width of window
h) Worksheets (see Appendix B):
    1) Cross-Section Cost Factor (CSCF)

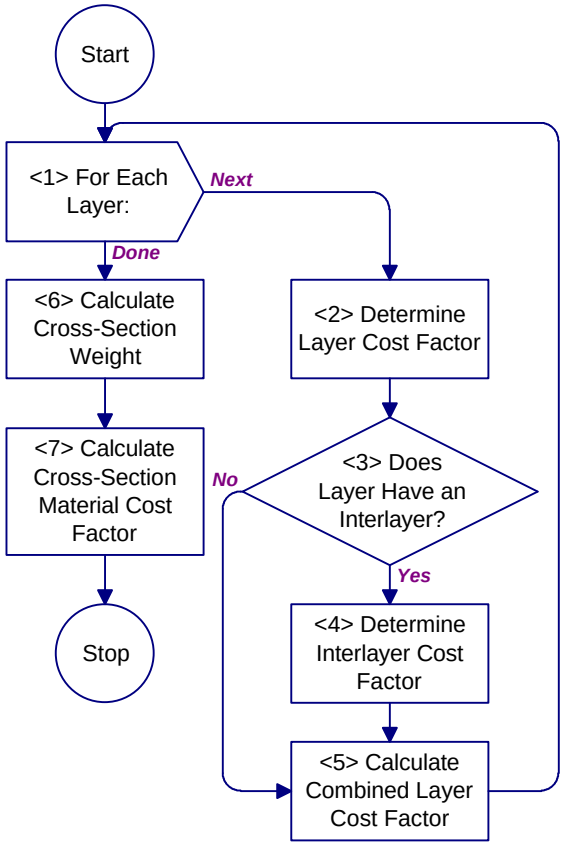


<1> **For Each Layer:** For each layer of material in the cross-section, repeat <2>, <3>, and <4>. Start with the layer closest to the attack side of the cross-section and work toward the protected side. Proceed to <6> when done.

<2> **Determine Layer Cost Factor.** Enter the layer's material type and thickness in the first available row under columns (b) and (c), respectively, of the Cross-Section Cost Factor (CSCF) worksheet (see Appendix B for all worksheets). Use the material type to select a table from Table 28. Enter the table number in column (d). Go to the appropriate table and obtain the layer cost factor and weight using the layer's thickness. Enter these values in columns (e) and (f), respectively. For odd thicknesses of material, the analyst may interpolate between two values or simply use the next larger size. Proceed to <3>.

<3> **Does Layer Have an Interlayer?** If the current layer is bonded to a second layer on the current layer's protected side, proceed to <4>. Otherwise, proceed to <5>.

<4> **Determine Interlayer Cost Factor.** Enter the interlayer material type and thickness in columns (g) and (h), respectively, of the CSCF worksheet. Use Table 33 and Table 34 to obtain cost factors for PVB and urethane, respectively. If the type of interlayer material is unknown, use a cost factor of 4.1. Enter the interlayer cost factor in column (i). Proceed to <5>.

<5> **Calculate Combined Layer Cost Factor.** Add columns (e) and (i) and put their sum in column (j). If column (i) is blank, put the value from column (e) in column (j). Proceed to <1>.

<6> **Calculate Cross-Section Weight.** Sum weights in column (f). Put the sum in field (k). Put the window height and width in fields (l) and (m), respectively. Calculate window area by multiplying fields (l) and (m) together. Put the window area in field (n). Calculate the cross-section weight by multiplying fields (k) and (n) together. Put the cross-section weight in field (o). Proceed to <7>.

<7> **Calculate Cross-Section Material Cost Factor.** Sum cost factors in column (j). Put the sum in field (p). Enter the number of windows in the facility in field (q). Calculate the cross-section material cost factor by multiplying fields (n), (p), and (q) together. Put this cost factor in field (r). Return to Figure 35.

**Figure 36**
Process Chart and Description: Cross-Section Material Cost Estimate Procedure

**Table 28**
Cross-Section Cost Factor Table Selection

| Material | Table |
|---|---|

| | English Units | Metric Units |
|---|---|---|
| Air Gap | (a) | (a) |
| Annealed Glass | Table 29 | Table 30 |
| Chemically Strengthened Glass (CS) | Table 29 | Table 30 |
| Extruded Ionomer | (b) | (b) |
| Heat Strengthened Glass (HS) | Table 29 | Table 30 |
| Polycarbonate | Table 31 | Table 32 |
| Thermally Tempered Glass (TTG) | Table 29 | Table 30 |

(a) Use a cost factor of 40.0 per unit area and weight of 0.0 lb/sq-ft (0.0 kg/sq-m) for all air gaps.
(b) Extruded ionomer cost factors are not included in the handbook. The analyst is advised to contact a security window vendor for cost information.

**Table 29**
Glass Cost Factors and Weight per Unit Area (English Units)

| Glass Type | Thickness | | | | | |
|---|---|---|---|---|---|---|
| | 1/8 inch | 1/4 inch | 3/8 inch | 1/2 inch | 5/8 inch | 3/4 inch |
| Annealed | 1.0 | 2.1 | 4.6 | 6.0 | 12.5 | 15.0 |
| Chemically Strengthened | 4.3 | 5.4 | 7.9 | N/A | N/A | N/A |
| Heat Strengthened | 4.5 | 5.5 | 8.0 | 9.3 | 15.8 | 18.3 |
| Thermally Tempered | 4.5 | 5.5 | 8.0 | 9.3 | 15.8 | 18.3 |
| Weight (lb/sq-ft) | 1.6 | 3.1 | 5.3 | 6.6 | 8.5 | 10.1 |

**Table 30**
Glass Cost Factors and Weight per Unit Area (Metric Units)

| Glass Type | Thickness | | | | | |
|---|---|---|---|---|---|---|
| | 3 mm | 6 mm | 10 mm | 12 mm | 16 mm | 19 mm |
| Annealed | 1.0 | 2.1 | 4.6 | 6.0 | 12.5 | 15.0 |
| Chemically Strengthened | 4.3 | 5.4 | 7.9 | N/A | N/A | N/A |
| Heat Strengthened | 4.5 | 5.5 | 8.0 | 9.3 | 15.8 | 18.3 |
| Thermally Tempered | 4.5 | 5.5 | 8.0 | 9.3 | 15.8 | 18.3 |
| Weight (kg/sq-m) | 7.8 | 15.1 | 25.9 | 32.2 | 41.5 | 49.3 |

**Table 31**
Polycarbonate Cost Factors and Weight per Unit Area (English Units)

| Property | Thickness | | | | | |
|---|---|---|---|---|---|---|
| | 1/16 inch | 1/8 inch | 3/16 inch | 1/4 inch | 3/8 inch | 1/2 inch |
| Cost Factor | 7.5 | 12.6 | 18.6 | 22.0 | 41.1 | 57.5 |
| Weight (lb/sq-ft) | 0.4 | 0.7 | 1.1 | 1.4 | 2.1 | 2.8 |

**Table 32**
Polycarbonate Cost Factors and Weight per Unit Area (Metric Units)

| Property | Thickness | | | | | |
|---|---|---|---|---|---|---|
| | 1.5 mm | 3 mm | 5 mm | 6 mm | 10 mm | 12 mm |
| Cost Factor | 7.5 | 12.6 | 18.6 | 22.0 | 41.1 | 57.5 |
| Weight (kg/sq-m) | 2.0 | 3.4 | 5.4 | 6.8 | 10.2 | 13.7 |

**Table 33**
PVB Interlayer Cost Factors per Unit Area

| Grade or Application | Thickness | | |
|---|---|---|---|
| | 0.015 inch (0.4 mm) | 0.030 inch (0.8 mm) | 0.060 inch (1.5 mm) |
| Aircraft Grade | 2.3 | 4.3 | 7.5 |
| Architectural Grade | 1.1 | 2.1 | 4.1 |
| Automotive Grade | N/A | 2.1 | N/A |
| Polycarbonate Glass-Cladding | N/A | N/A | 4.1 |

**Table 34**
Urethane Interlayer Cost Factors per Unit Area

| Thickness | | |
|---|---|---|
| 0.025 inch (0.6 mm) | 0.050 inch (1.3 mm) | 0.060 inch (1.5 mm) |
| 4.6 | 9.3 | 11.2 |

9.5 Cross-Section Fabrication Cost Estimate Procedure. This procedure provides cost factors for size, weight, and material mixing. The process chart for this procedure is presented in Figure 37. The procedure description is shown in Figure 38.

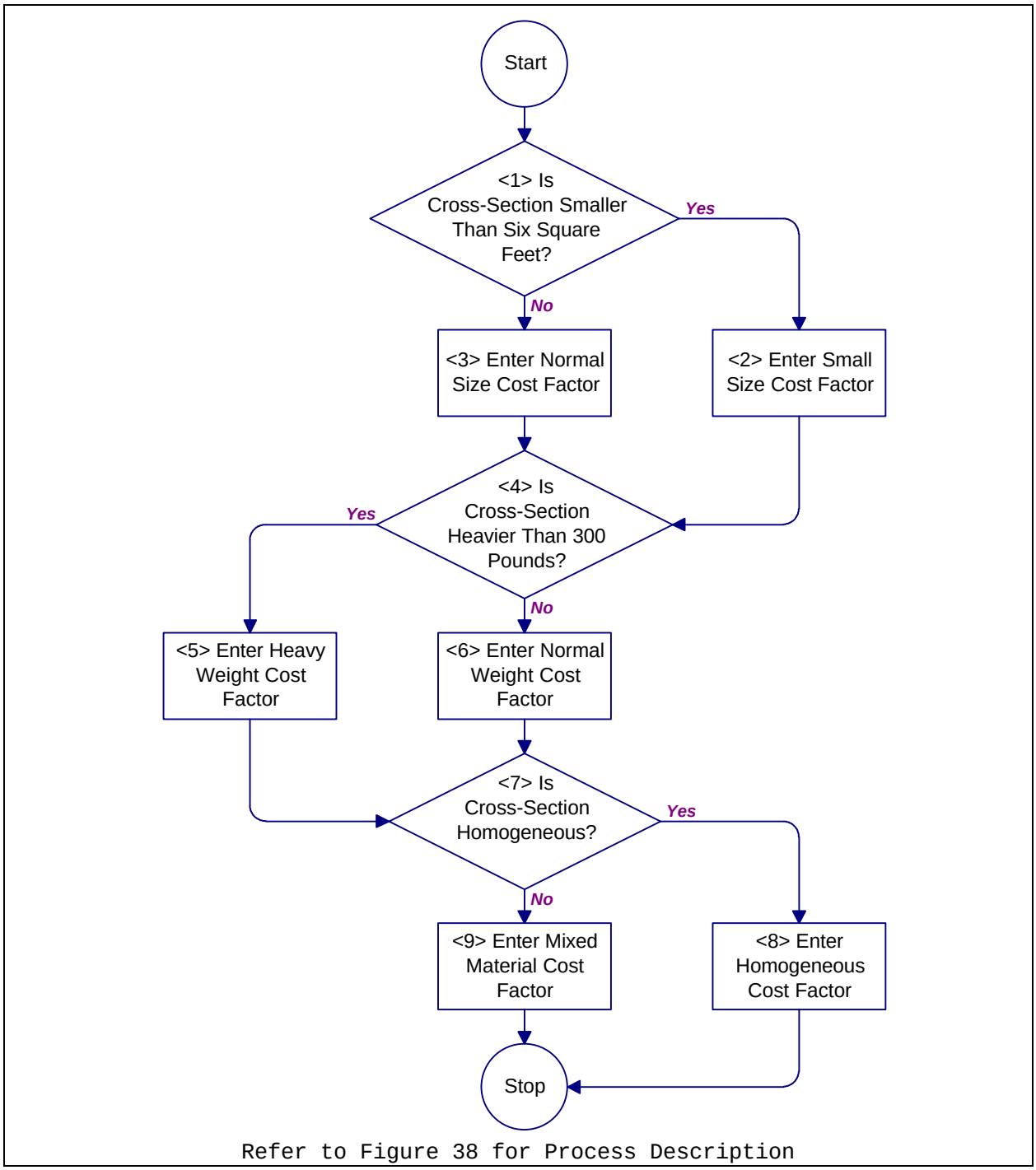


**Figure 37**
Process Chart: Cross-Section Fabrication Cost Estimate Procedure

<1> **Is Cross-Section Smaller Than Six Square Feet?** For small cross-sections, proceed to <2> to obtain small size cost factor. Otherwise, proceed to <3> for normal size cost factor.
<2> **Enter Small Size Cost Factor.** Small pieces require additional handling during fabrication. Enter a small size cost factor of 1.2 in field (s) of the Cross-Section Cost Factor (CSCF) worksheet (see Appendix B for all worksheets). Proceed to <4>.
<3> **Enter Normal Size Cost Factor.** Enter a normal size cost factor of 1.0 in field (s) of the CSCF worksheet. Proceed to <4>.
<4> **Is Cross-Section Heavier Than 300 (140 kg) Pounds?** For heavy cross-sections, proceed to <5> to enter heavy weight cost factor. Otherwise, proceed to <6> to enter normal weight cost factor.
<5> **Enter Heavy Weight Cost Factor.** Heavy cross-sections require two people and a manipulator for fabrication. Put 1.3 in field (t) of the CSCF worksheet. Proceed to <7>.
<6> **Enter Normal Weight Cost Factor.** Normal security cross-sections require two people for fabrication. Put 1.0 in field (t) of the CSCF worksheet. Proceed to <7>.
<7> **Is Cross-Section Homogeneous?** If the cross-section has only glass or polycarbonate layers, proceed to <8> to obtain homogeneous cost factor. Otherwise, proceed to <9> to enter mixed material cost factor.
<8> **Enter All Homogeneous Factor.** Put 1.15 in field (u) of the CSCF worksheet. Return to Figure 35.
<9> **Enter Mixed Material Cost Factor.** Put 1.25 in field (u) of the CSCF worksheet. Return to Figure 35.

**Figure 38**
Description: Cross-Section Cost Estimate Procedure

9.5.1 Required Information. The following information is required for a cross-section fabrication cost estimate:

a) Cross-section weight. This value is calculated using Figure 36.
b) Cross-section area. This value is calculated using Figure 36.
c) Cross-section material types. This information is entered using Figure 36.
d) Worksheets (see Appendix B):
   1) Cross-Section Cost Factor (CSCF)

9.6 Frame Cost Estimate Procedure. This procedure assists the analyst in determining a cost for a security frame. It includes factors for frame material, thickness, and type. Figure 39 presents a process chart and description of the procedure.

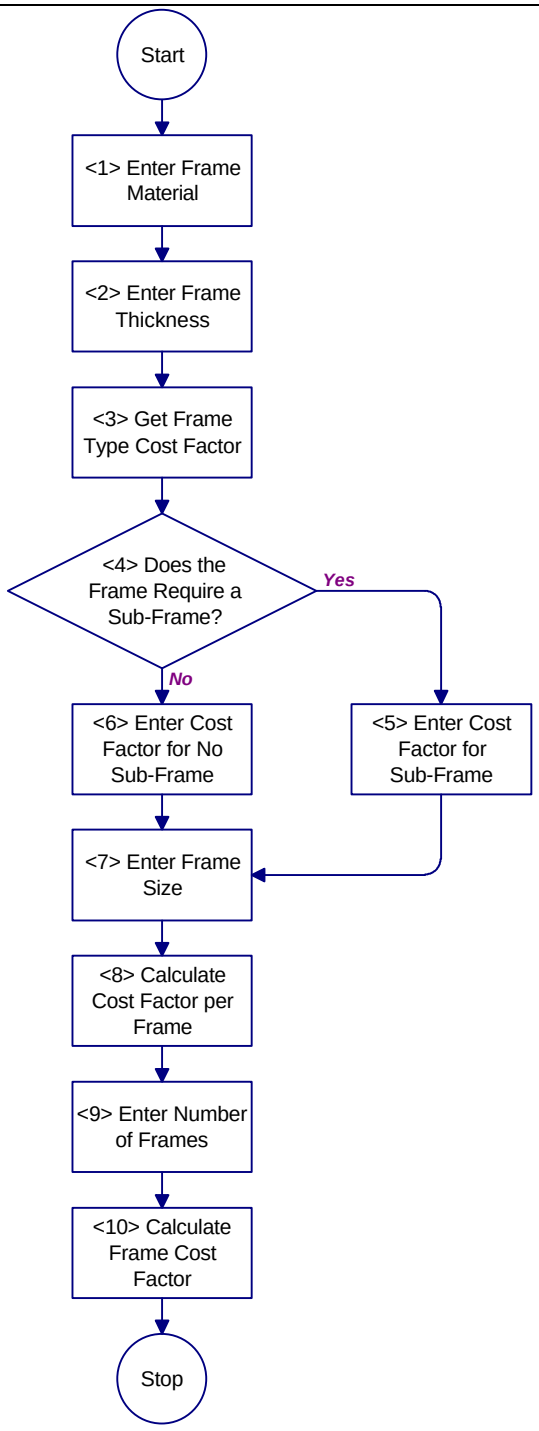


<1> **Enter Frame Material.** Enter frame material, aluminum or steel, in field (a) of the Frame Cost Factor (FCF) worksheet (see Appendix B for all worksheets). Proceed to <2>.

<2> **Enter Frame Thickness.** Enter thickness of frame in field (b) of the FCF worksheet. Proceed to <3>.

<3> **Get Frame Type Cost Factor.** Based on frame material and thickness, select the applicable frame type from Table 35 and retrieve a corresponding type cost factor. Enter the cost factor in field (c) of the FCF worksheet. Proceed to <4>

<4> **Does the Frame Require a Sub-Frame?** If the frame will have to resist blast and will be poured in place, it will need a sub-frame. Proceed to <5>. Otherwise, proceed to <6>.

<5> **Enter Sub-Frame Cost Factor.** Put 2.0 in field (d) of the FCF worksheet. Proceed to <7>.

<6> **Enter "No Sub-Frame" Cost Factor.** Put 1.0 in field (d) of the FCF worksheet. Proceed to <7>.

<7> **Enter Frame Size.** Enter the perimeter dimension of the frame in field (e) of the FCF worksheet. Proceed to <8>.

<8> **Calculate Cost Factor per Frame.** On the FCF worksheet, multiply fields (c), (d), and (e) together, then put the result in field (f). Proceed to <9>.

<9> **Enter Number of Frames.** Enter the number of frames required for the facility in field (g) of the FCF worksheet. Proceed to <10>.

<10> **Calculate Frame Cost Factor**. On the FCF worksheet, multiply fields (f) and (g) together, then put the result in the field (h). This value is the frame cost factor. Return to Figure 34.

**Figure 39**
Process Chart and Description: Frame Cost Estimate Procedure

9.6.1 Required Information. The following information is required for a frame cost estimate:

a) Frame material
b) Frame thickness
c) Method of anchoring frame to wall
d) Size of frame
e) Number of frames required
f) Worksheets (see Appendix B):
    1) Frame Cost Factor (FCF)

**Table 35**
Frame Type Cost Factors

| Frame Type | Cost Factor |
|---|---|
| Light Aluminum (less than 1/4 inch (6 mm) thick) | 1.0 |
| Heavy Aluminum (1/4 inch (6 mm) thick or thicker) | 1.6 |
| Light Steel (less than 1/4 inch (6 mm) thick) | 1.8 |
| Heavy Steel (1/4 inch (6 mm) thick or thicker) | 2.3 |

9.7 Installation Cost Estimate Procedure. The cost of installation depends on the protection provided, wall construction, type of construction (new or retrofit), and the type of anchorage. Rather than oversimplifying the process of estimating the cost of glazing installation, this handbook provides general guidance. Figure 40 provides a process chart and procedure description for this guidance.

9.7.1 Required Information. The following information is required for an installation cost estimate:

a) Labor rate cost of installation crew. It is assumed that a two person crew is required for glazing systems weighing less than 250 pounds (110 kg).
b) Type of construction (new facility or retrofit of an existing facility)
c) Cost of hardening wall. This information is required for retrofit construction where the wall does not provide protection equivalent to that afforded by the glazing system.
d) Weight of glazing cross-section. This information is determined using Figure 36.

e) Labor rate of extra crew member. This information is required for glazing systems that weigh more than 250 pounds (110 kg).
f) Cost of special handling equipment. This information is required for glazing systems that weigh more than 250 pounds (110 kg).
g) Method of anchoring frame to wall.
h) Cost of preparing wall for anchorage.
i) Cost of aligning and anchoring frame.
j) Worksheet (see Appendix B):
    1) Installation Cost

9.8 Initial Cost Estimate Procedure. This procedure provides the steps for combining the cross-section, frame, and installation costs that the analyst estimated in previous analyses. Figure 41 presents a process chart and description of the procedure.

9.8.1 Required Information. The following information is required for an initial cost estimate:

a) Base unit cost for cross-section. This is the cost per unit area of 1/8-inch (3-mm) thick annealed glass.
b) Base unit cost for frame. This value is the cost per unit length of a light (less than 1/4-inch (6-mm) thick) aluminum frame.
c) Worksheets (see Appendix B):
    1) Initial Cost (IC)

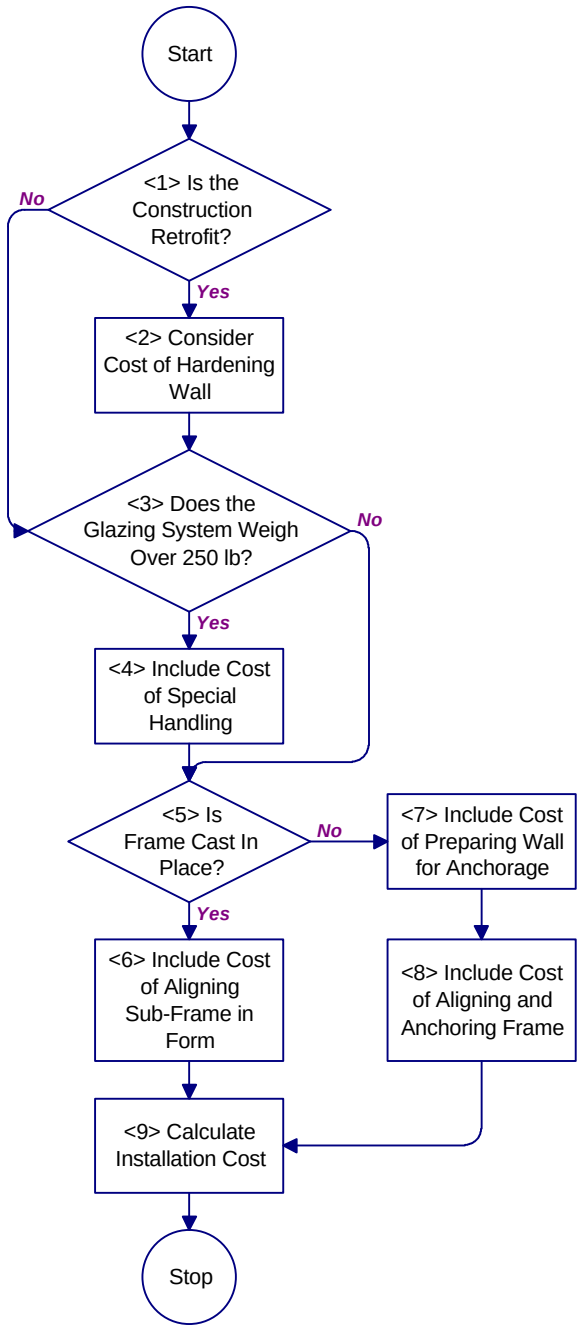


<1> **Is the Construction Retrofit?** If the project involves retrofitting an existing facility with security glazing, go to <2>. For a new facility, proceed to <3>.

<2> **Consider Cost of Hardening Wall?** If the design basis threat includes forced entry or ballistic tactics, determine if the wall needs hardening to provide protection equivalent to the glazing system. If wall hardening is warranted, include the cost in the installation cost estimate. Proceed to <3>.

<3> **Does the Glazing System Weigh Over 250 lb (110 kg)?** For a glazing system that weighs more than 250 lb. (110 kg), go to <4>. Otherwise, proceed to <5>.

<4> **Include Cost of Special Handling.** To handle the heavy glazing cross-section, the installation crew will require an additional worker or special handling equipment. Include this cost in the installation cost estimate.

<5> **Is Frame Cast in Place?** The design of a new facility may allow a glazing sub-frame to be cast into a concrete wall. If this is the case, go to <6>. Otherwise, proceed to <7>.

<6> **Include Cost of Aligning Sub-Frame in Form.** For cast in place, workers must align a sub-frame in the wall form work. Include this cost in the installation cost estimate. Proceed to <9>

<7> **Include Cost of Preparing Wall for Anchorage.** Wall preparation covers drilling holes for anchor bolts. Include this cost in the installation cost estimate. Proceed to <8>.

<8> **Include Cost of Aligning and Anchoring Frame.** The frame must be properly aligned and anchored in a wall opening so as to avoid stressing the glazing. Include this cost in the installation cost estimate. Proceed to <9>.

<9> **Calculate Installation Cost.** Total the costs associated with installation and enter the value in field (e) on the Installation Cost worksheet (see Appendix B for all worksheets). Return to Figure 34.

**Figure 40**
Process Chart and Description: Installation Cost Estimate Procedure

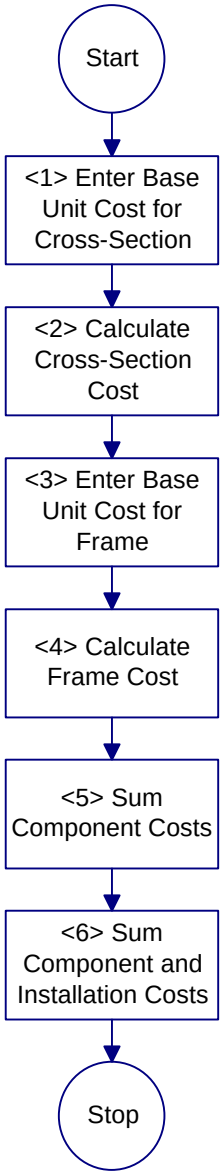


<1> **Enter Base Unit Cost for Cross-Section.** Enter the cost per square foot for 1/8-inch (3-mm) annealed glass in column (b) of the cross-section row on the Initial Cost worksheet (see Appendix B for all worksheets). Proceed to <2>.

<2> **Calculate Cross-Section Cost.** Multiply the cross-section base unit cost in column (b) by the cross-section cost factor in column (a) of the Initial Cost worksheet. Enter the product in column (c) of the cross-section row on the Initial Cost worksheet. Proceed to <3>.

<3> **Enter Base Unit Cost for Frame.** Enter the cost per linear foot for a light (less than 1/4-inch (6-mm) thick), aluminum frame in column (b) of the frame row on the Initial Cost worksheet. Proceed to <4>.

<4> **Calculate Frame Cost.** Multiply the frame base unit cost in column (b) by the frame cost factor in column (a) of the Initial Cost worksheet. Enter the product in column (c) of the frame row on the Initial Cost worksheet. Proceed to <5>.

<5> **Sum Component Costs.** Add the cross-section and frame costs to produce a total component cost. These costs are found in column (c) of the cross-section row and column (c) of the frame row, respectively. Enter this value in field (d). Proceed to <6>.

<6> **Sum Component and Installation Costs.** Sum the component and installation costs on the Initial Cost worksheet. These values are found in fields (d) and (e), respectively. Enter this amount in the (f) field. This value is the estimated initial cost for security glazing. Return to Figure 34.

**Figure 41**
Process Chart and Description: Initial Cost Estimate Procedure

# APPENDIX A

# PROCESS CHARTS

A.1 Introduction. A process chart is a graphical representation of a logical chain of steps which have to be executed in a certain order. Any process can consist of only three categories of structures: iteration, selection, and sequence. However, for clarity, informational structures are included in the process charts presented in this handbook.

A.2 Informational Structure. This handbook uses two types of informational structures: terminal and report. The two structures are described in the following paragraphs.

A.2.1 Terminal Structure. The terminal structure, shown in Figure A-1, marks the beginning and end of a process chart. As terminal structures perform the same role on all process charts, they do not have structure numbers and are not explained in the descriptive text.

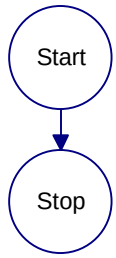


**Start**. A process chart begins with a terminal structure represented by the word Start inside a circle. Control flows along the arrow connecting the terminal structure to the next structure.
**Stop**. A process chart ends with a terminal structure represented by the word Stop inside a circle. Control returns to the previous process chart.

**Figure A-1**
Terminal Structure

A.2.2 Report Structure. The report structure, shown in Figure A-2, provides feedback or information pertinent to executing a procedure.

**Figure A-2**
Report Structure

A.3 Sequence Structure. This handbook uses two types of sequence structure: simple sequence and procedural. The two structures are described in the following paragraphs.

A.3.1 Simple Sequence Structure. The simple sequence structure, shown in Figure A-3, executes a single action.

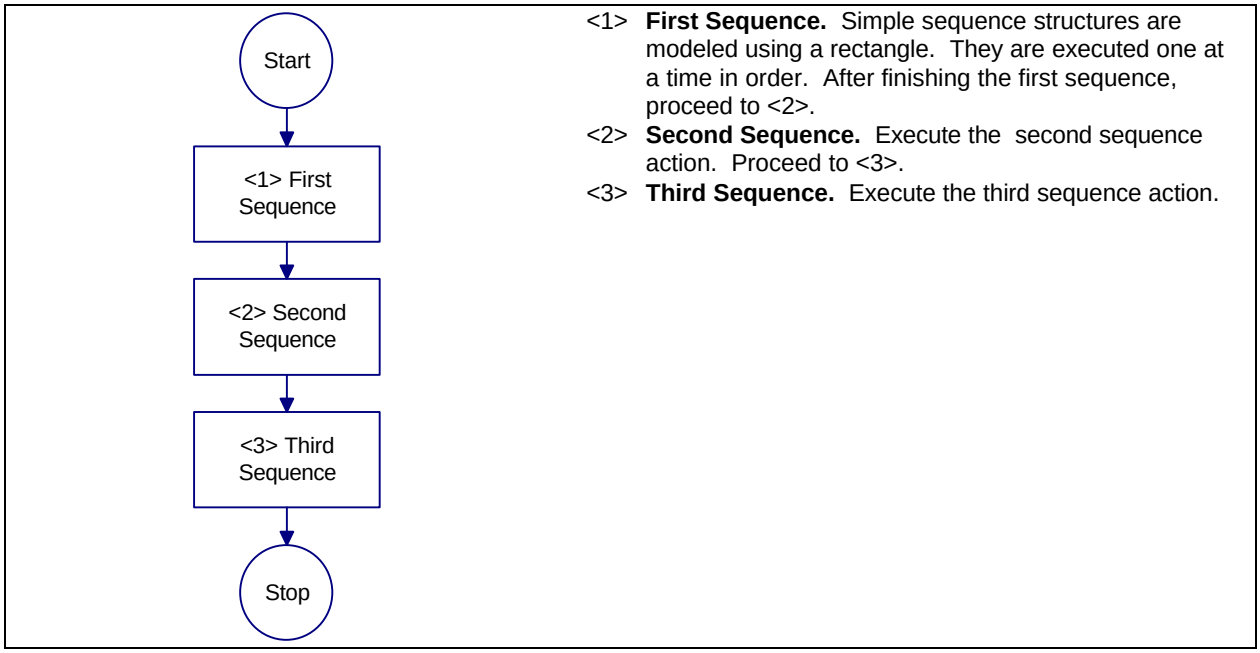


**Figure A-3**
Simple Sequence Structure

A.3.2 Procedural Structure. The procedural structure, shown in Figure A-4, represents the execution of multiple actions, i.e., the execution of a procedure.

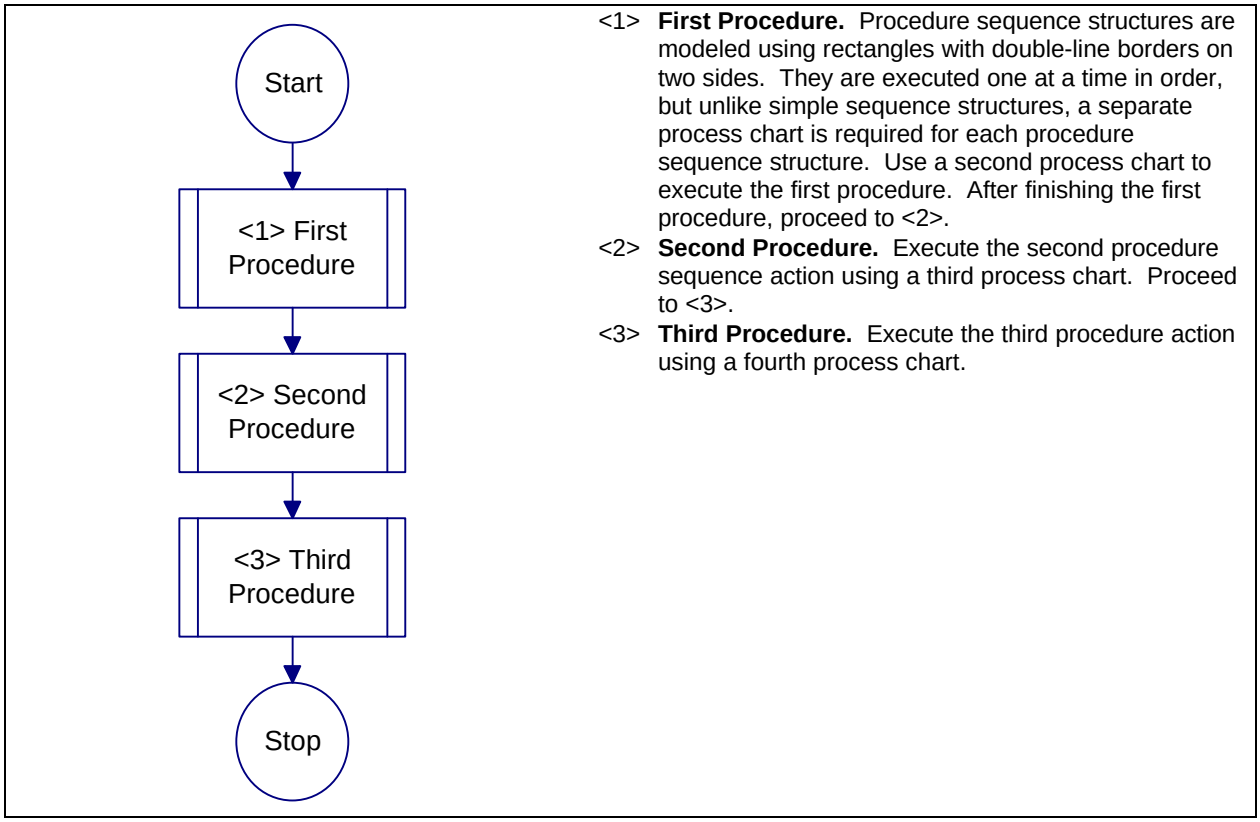


**Figure A-4**
Procedural Structure

A.4 Selection Structure. This handbook uses two types of selection structures: simple selection and case. The two structures are described in the following paragraphs.

A.4.1 Simple Selection Structure. The simple selection structure, shown in Figure A-5, asks a question, in the form of a conditional, that requires a yes or no action. A specific action is taken for a yes response and another action is taken for a no response.

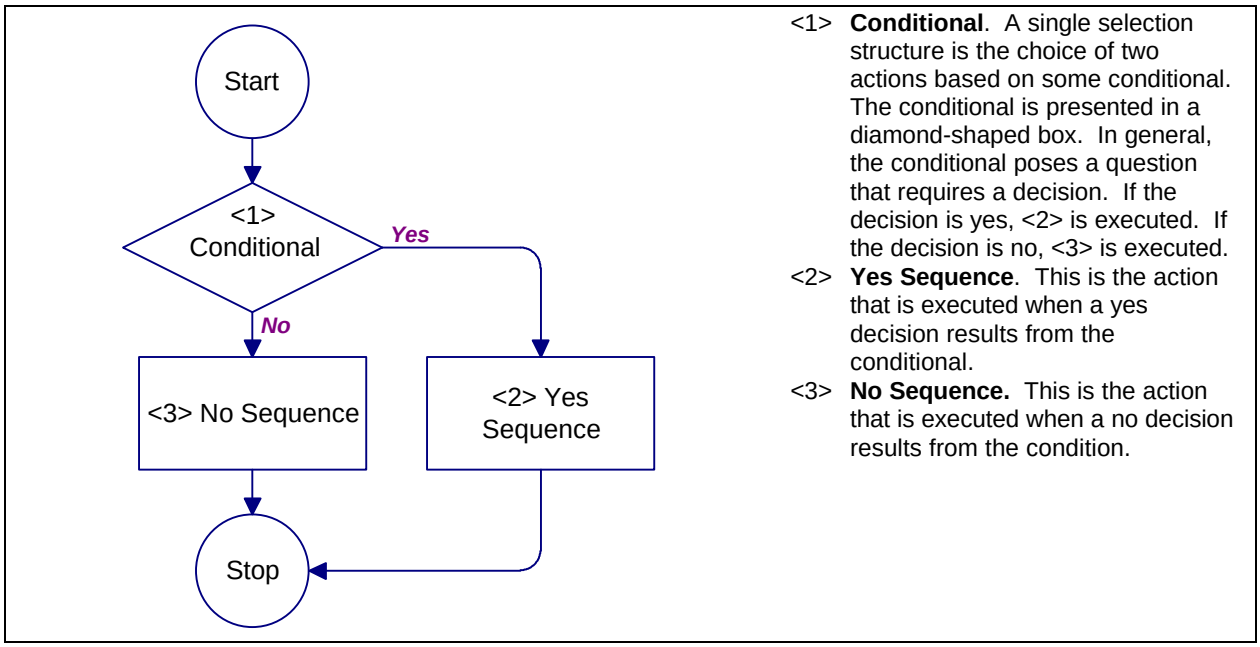


**Figure A-5**
Simple Selection Structure

A.4.2 Case Structure. The case selection structure, shown in Figure A-6, asks a question in the form of a conditional that allows a choice from multiple actions. A specific action is taken for each response.

A.5 Iteration Structure. Iteration is used to execute a group of structures repeatedly while a condition is true. This handbook uses two types of iteration structures: do while and for. The two structures are described in the following paragraphs.

A.5.1 Do While Structure. The do while structure, shown in Figure A-7, asks a question in the form of a conditional and executes a group of structures while the conditional is true.

A.5.2 For Structure. The for structure, shown in Figure A-8, executes a group of structures for a set number of iterations. Execution stops when the set number of iterations is completed.

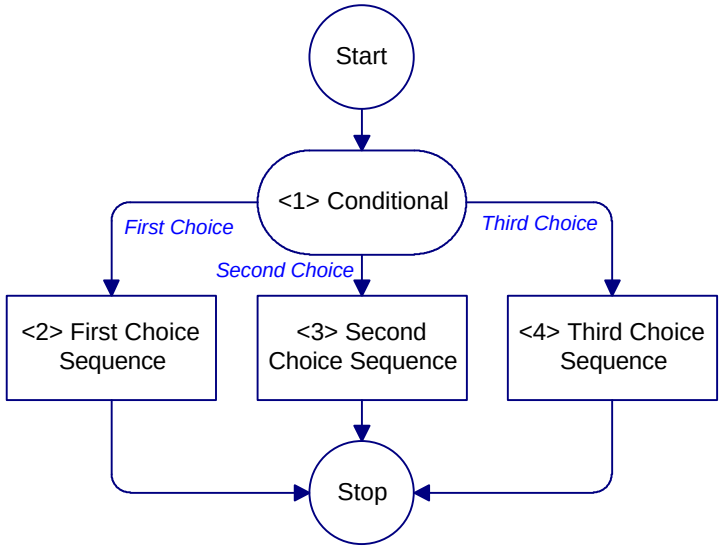


<1> **Conditional.** A case selection structure is the choice of multiple actions based on some conditional. The conditional is presented in an oval-shaped box. In general, the conditional poses a question that requires a decision. If the decision is the first choice, <2> is executed. If the decision is the second choice, <3> is executed. If the decision is the third choice, <4> is executed.

<2> **First Choice Sequence.** This is the action that is executed when the first choice results from the conditional.

<3> **Second Choice Sequence.** This is the action that is executed when the second choice results from the conditional.

<4> **Third Choice Sequence.** This is the action that is executed when the third choice results from the conditional.

**Figure A-6**
Case Structure

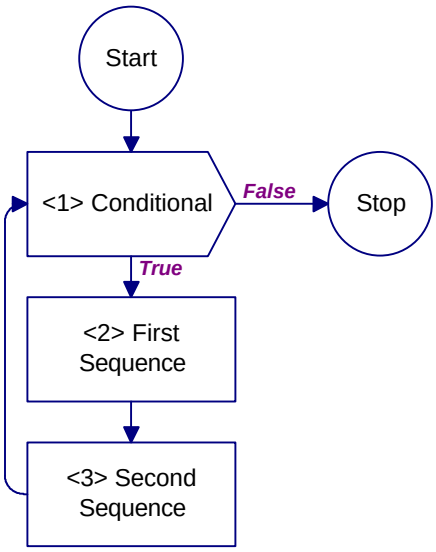


<1> **Conditional.** A do while iteration structure will repeat as long as the conditional is true. In general, the conditional poses a prerequisite for continued iteration. If that prerequisite is met, the condition is true and execution proceeds to <2>. If the prerequisite is not met, the condition is false and execution stops.

<2> **First Sequence.** This is the first action that is executed when the conditional is true. Proceed to <3>.

<3> **Second Sequence.** This is the second action that is executed when the conditional is true. Proceed to <1>.

**Figure A-7**
Do While Structure

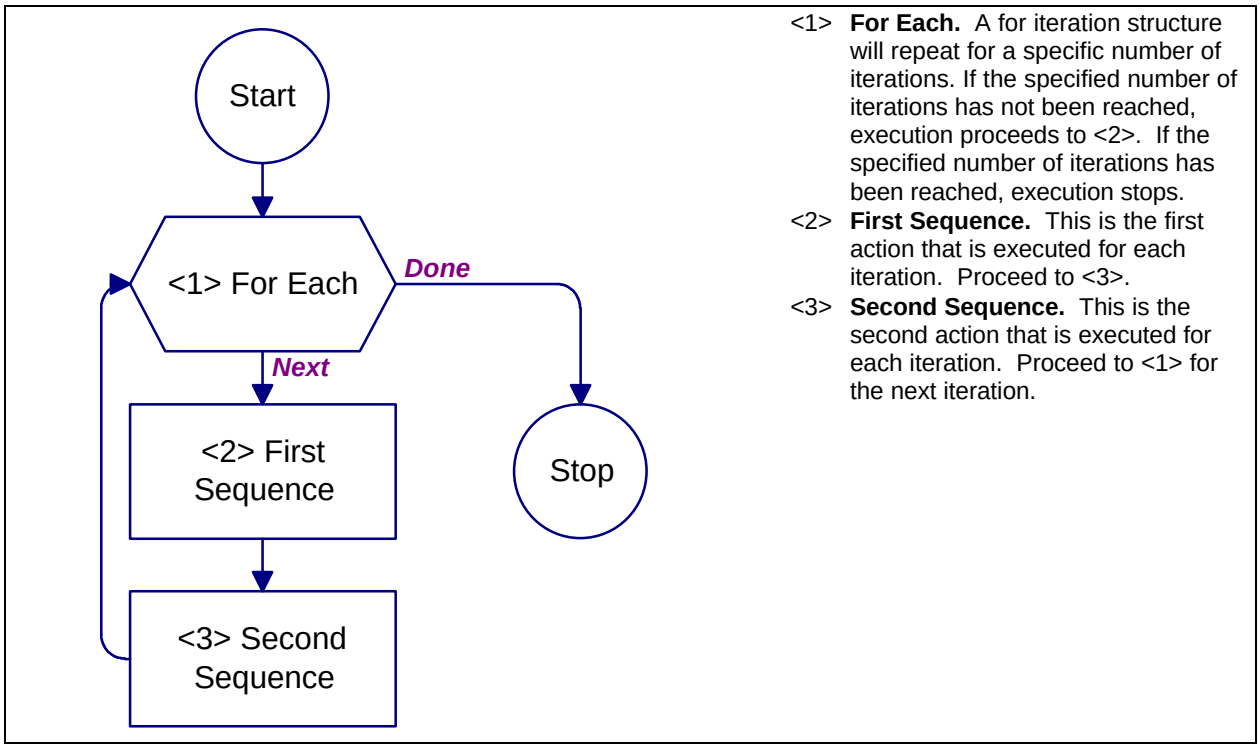


**Figure A-8**
For Structure

# APPENDIX B

## SECURITY GLAZING PLANNING AND ANALYSIS WORKSHEETS

B.1 Introduction. This appendix contains worksheets to be used with the planning and design procedures described in the handbook. Local reproduction of these worksheets is authorized.

B.2 Worksheet Summary. The following list summarizes the worksheets contained in this appendix.

a) Glazing System Design Criteria Summary (DCS)
b) Asset Value/Aggressor Likelihood (AVAL)
c) Glazing System Tactic and Threat Severity Level (TTSL)
d) Collateral Damage Assessment (CDA)
e) Cross-Section Evaluation (CSE)
f) Frame Evaluation (FE)
g) Anchorage Evaluation (AE)
h) Wall Evaluation (WE)
i) Cross-Section Selection (CSS)
j) Frame Selection (FS)
k) Anchorage Selection (AS)
l) Wall Selection (WS)
m) Cross-Section Cost Factor (CSFC)
n) Frame Cost Factor (FCF)
o) Installation Cost
p) Initial Cost
q) Safevue Data Entry (SDE)
r) Safevue Analysis (SA)

## Glazing System Design Criteria Summary Worksheet

| 1. Project/Building Identification | 2. Date |
|---|---|
| | |

| 4. Assets | Primary (P) or Secondary (S) (a) | Asset Category (b) | Asset Value Rating (c) | 3. Tactics: Moving Vehicle Bomb (a) | | Stationary Vehicle Bomb (b) | | Exterior (c) | | Ballistics (d) | | Forced Entry (e) | |
|---|---|---|---|---|---|---|---|---|---|---|---|---|---|
| | | | | DBT | LOP | DBT | LOP | DBT | LOP | DBT | LOP | DBT | LOP |
| (1) | | | | | | | | | | | | | |
| (2) | | | | | | | | | | | | | |
| (3) | | | | | | | | | | | | | |
| (4) | | | | | | | | | | | | | |
| (5) | | | | | | | | | | | | | |
| (6) | | | | | | | | | | | | | |
| (7) | | | | | | | | | | | | | |
| (8) | | | | | | | | | | | | | |
| (9) | | | | | | | | | | | | | |
| (10) | | | | | | | | | | | | | |
| (11) | | | | | | | | | | | | | |
| (12) | | | | | | | | | | | | | |

Legend: DBT - Design Basis Threat LOP - Level of Protection

## Asset Value/Aggressor Likelihood Worksheet

1. Project/Building Identification

2. Date

| 3. Primary (P) or Secondary (S) | 4. Asset Category | 5. Value Rating Factors: Military Mission Criticality *a* | User Mission Criticality *b* | Replaceability *c* | Relative Value *d* | 6. Sum of Value Rating Factors | 7. Asset Value Rating |
|---|---|---|---|---|---|---|---|
| | | | | | | | |
| Table Reference | | | | | | | |

9. Asset Identification

| 8. Potential (X) | 10. Aggressors | 11. Likelihood Rating Factors: Asset Profile *a* | Usefulness *b* | Asset Availability *c* | Local Incidents (Past) *d* | Nearby Incidents (Past) *e* | Potential Incidents *f* | Accessibility *g* | Law Enforcement Effectiveness *h* | Deterrence *i* | Sum of Likelihood Rating Factors *j* | Likelihood Rating *k* |
|---|---|---|---|---|---|---|---|---|---|---|---|---|
| | Table Reference | | | | | | | | | | | |
| | a. Unsophisticated Criminals | | | | | | | | | | | |
| | b. Sophisticated Criminals | | | | | | | | | | | |
| | c. Organized Criminal Groups | | | | | | | | | | | |
| | d. Vandals | | | | | | | | | | | |
| | e. Extremist Protesters | | | | | | | | | | | |
| | f. CONUS Terrorists | | | | | | | | | | | |
| | g. OCONUS Terrorists | | | | | | | | | | | |
| | h. Paramilitary OCONUS Terrorists | | | | | | | | | | | |
| | i. Saboteurs | | | | | | | | | | | |
| | j. Spies | | | | | | | | | | | |

## Glazing System Tactic and Threat Severity Level Worksheet

| 1. Project/Building Identification | 2. Asset Identification | | | | 3. Date | |
|---|---|---|---|---|---|---|
| 4. Tactics / 5. Aggressor | Applicable Aggressors (X) | Moving Vehicle Bomb *(a)* | Stationary Vehicle Bomb *(b)* | Exterior *(c)* | Ballistics *(d)* | Forced Entry *(e)* |
| Applicable Tactics (X) | | | | | | |
| a. Unsophisticated Criminals | | | | | | |
| b. Sophisticated Criminals | | | | | | |
| c. Organized Criminal Groups | | | | | | |
| d. Vandals/Activists | | | | | | |
| e. Extremist Protesters | | | | | | |
| f. CONUS Terrorists | | | | | | |
| g. OCONUS Terrorists | | | | | | |
| h. Paramilitary OCONUS Terrorists | | | | | | |
| i. Saboteurs | | | | | | |
| j. Spies | | | | | | |
| k. Design Basis Threat | | | | | | |

## Collateral Damage Assessment Worksheet

| 1. Project/Building Identification | 2. Asset Identification | 3. Date |
|---|---|---|
| | | |

| Neighboring Asset Identification | Distance (ft) | Moving Vehicle Bomb | | | | Stationary Vehicle Bomb | | | |
|---|---|---|---|---|---|---|---|---|---|
| | | Neighboring Asset Design Basis Threat | Explosive Arc Radius 1 (ft) | Explosive Arc Radius 2 (ft) | Level of Protection | Neighboring Asset Design Basis Threat | Explosive Arc Radius 1 (ft) | Explosive Arc Radius 2 (ft) | Level of Protection |
| *(a)* | *(b)* | *(c)* | *(d)* | *(e)* | *(f)* | *(g)* | *(h)* | *(i)* | *(j)* |
| *1.* | | | | | | | | | |
| *2.* | | | | | | | | | |
| *3.* | | | | | | | | | |
| *4.* | | | | | | | | | |
| *5.* | | | | | | | | | |
| *6.* | | | | | | | | | |
| *7.* | | | | | | | | | |
| *8.* | | | | | | | | | |
| *9.* | | | | | | | | | |
| *10.* | | | | | | | | | |
| *11.* | | | | | | | | | |
| *12.* | | | | | | | | | |

## Cross-Section Evaluation Worksheet

| 1. Project/Building Identification | 2. Asset Identification | 3. Date |
|---|---|---|
| | | |

| *Cross-Section Type* | *Component* | Existing Cross-section (a) | *Tactic* | | | | | Resolved Thicknesses (g) | Acceptable Thickness (h) |
|---|---|---|---|---|---|---|---|---|---|
| | | | Moving Vehicle Bomb (b) | Stationary Vehicle Bomb (c) | Exterior (d) | Ballistics (e) | Forced Entry (f) | | |
| Monolithic Glass | Total Thickness | | | | | | | | ☐ Yes ☐ No |
| Laminated Glass | Total Thickness | | | | | | | | ☐ Yes ☐ No |
| Monolithic Polycarbonate | Total Thickness | | | | | | | | ☐ Yes ☐ No |
| Laminated Polycarbonate | Total Thickness | | | | | | | | ☐ Yes ☐ No |
| Glass-Clad Polycarbonate | Total Thickness | | | | | | | | ☐ Yes ☐ No |
| | Polycarbonate Thickness | | | | | | | | ☐ Yes ☐ No |
| Extruded Ionomer | Total Thickness | | | | | | | | ☐ Yes ☐ No |
| | Ionomer Thickness | | | | | | | | ☐ Yes ☐ No |
| Glass-Air Gap | Total Thickness | | | | | | | | ☐ Yes ☐ No |
| | Glass Thickness | | | | | | | | ☐ Yes ☐ No |
| Glass-Air Gap with Polycarbonate | Total Thickness | | | | | | | | ☐ Yes ☐ No |
| | Polycarbonate Thickness | | | | | | | | ☐ Yes ☐ No |
| | Glass Thickness | | | | | | | | ☐ Yes ☐ No |

Does Glazing Cross-Section Meet Design Requirements? ☐ Yes ☐ No

## Frame Evaluation Worksheet

| 1. Project/Building Identification | 2. Asset Identification | 3. Date |
|---|---|---|
| | | |

| *Frame Properties* | Existing Frame (a) | *Tactics* | | | | | Resolved Properties (g) | Acceptable Properties (h) |
|---|---|---|---|---|---|---|---|---|
| | | Moving Vehicle Bomb (b) | Stationary Vehicle Bomb (c) | Exterior (d) | Ballistics (e) | Forced Entry (f) | | |
| Frame Material | | | | | | | | ☐ Yes ☐ No |
| Frame Thickness | | | | | | | | ☐ Yes ☐ No |
| Removable Stop Thickness | | | | | | | | ☐ Yes ☐ No |
| Bite Depth | | | | | | | | ☐ Yes ☐ No |
| Glazing Rabbet Depth | | | | | | | | ☐ Yes ☐ No |

Does Frame Meet Design Requirements? ☐ Yes ☐ No

## Anchorage Evaluation Worksheet

| 1. Project//Building Identification | 2. Asset Identification | 3. Date |
|---|---|---|
| | | |

| *Anchorage Properties* | Existing Anchorage (a) | *Tactics* Moving Vehicle Bomb (b) | Stationary Vehicle Bomb (c) | Exterior (d) | Forced Entry (e) | Resolved Properties (f) | Acceptable Properties (g) |
|---|---|---|---|---|---|---|---|
| Anchor Bolt Type | | | | | | | ☐ Yes ☐ No |
| Anchor Bolt Diameter | | | | | | | ☐ Yes ☐ No |
| Anchor Bolt Embedment | | | | | | | ☐ Yes ☐ No |
| Maximum Anchor Bolt Spacing: Frame Corner To Bolt | | | | | | | ☐ Yes ☐ No |
| Maximum Anchor Bolt Spacing: Between Adjacent Bolts | | | | | | | ☐ Yes ☐ No |
| Removable Stop Anchor Bolt Type | | | | | | | ☐ Yes ☐ No |
| Removable Stop Anchor Bolt Diameter | | | | | | | ☐ Yes ☐ No |
| Number of Removable Stop Anchor Bolts Per Side | | | | | | | ☐ Yes ☐ No |
| Removable Stop Anchor Bolt Spacing: Frame Corner To Bolt | | | | | | | ☐ Yes ☐ No |
| Removable Stop Anchor Bolt Spacing: Between Adjacent Bolts | | | | | | | ☐ Yes ☐ No |

Does Anchorage Meet Design Requirements? ☐ Yes ☐ No

## Wall Evaluation Worksheet

| 1. Project/Building Identification | 2. Asset Identification | 3. Date |
|---|---|---|
| | | |

| *Wall Type* | Existing Wall | *Tactic* | | | | | Resolved Thickness | Acceptable Thickness |
|---|---|---|---|---|---|---|---|---|
| | | Moving Vehicle Bomb | Stationary Vehicle Bomb | Exterior | Ballistics | Forced Entry | | |
| | *(a)* | *(b)* | *(c)* | *(d)* | *(e)* | *(f)* | *(g)* | *(h)* |
| Wood Frame | | | | | | | | ☐ Yes<br>☐ No |
| Brick | | | | | | | | ☐ Yes<br>☐ No |
| Reinforced Concrete Block | | | | | | | | ☐ Yes<br>☐ No |
| Reinforced Concrete | | | | | | | | ☐ Yes<br>☐ No |

Does Wall Meet Design Requirements? ☐ Yes ☐ No

## Cross-Section Selection Worksheet

| 1. Project/Building Identification | 2. Asset Identification | 3. Date |
|---|---|---|
| | | |

| *Cross-Section Type* | *Component* | *Tactic* | | | | | Resolved Thickness |
|---|---|---|---|---|---|---|---|
| | | Moving Vehicle Bomb *(a)* | Stationary Vehicle Bomb *(b)* | Exterior *(c)* | Ballistics *(d)* | Forced Entry *(e)* | *(f)* |
| Monolithic Glass | Total Thickness | | | | | | |
| Laminated Glass | Total Thickness | | | | | | |
| Monolithic Polycarbonate | Total Thickness | | | | | | |
| Laminated Polycarbonate | Total Thickness | | | | | | |
| Glass-Clad Polycarbonate | Total Thickness | | | | | | |
| | Polycarbonate Thickness | | | | | | |
| | Glass Thickness | | | | | | |
| Extruded Ionomer | Total Thickness | | | | | | |
| | Ionomer Thickness | | | | | | |
| | Glass Thickness | | | | | | |
| Glass-Air Gap | Total Thickness | | | | | | |
| | Glass Thickness | | | | | | |
| Glass-Air Gap with Polycarbonate | Total Thickness | | | | | | |
| | Polycarbonate Thickness | | | | | | |
| | Glass Thickness | | | | | | |

Does Glazing Cross-Section Meet Design Requirements? ☐ Yes ☐ No

## Frame Selection Worksheet

| 1. Project/Building Identification | 2. Asset Identification | 3. Date |
|---|---|---|
| | | |

| *Frame Properties* | *Tactics* | | | | | Resolved Specifications |
|---|---|---|---|---|---|---|
| | Moving Vehicle Bomb | Stationary Vehicle Bomb | Exterior | Ballistics | Forced Entry | |
| | *(a)* | *(b)* | *(c)* | *(d)* | *(e)* | *(f)* |
| Frame Material | | | | | | |
| Frame Thickness | | | | | | |
| Removable Stop Thickness | | | | | | |
| Bite Depth | | | | | | |
| Glazing Rabbet Depth | | | | | | |

Does Frame Meet Design Requirements? ☐ Yes ☐ No

## Anchorage Selection Worksheet

| 1. Project/Building Identification | 2. Asset Identfication | 3. Date |
|---|---|---|
| | | |

| *Anchorage Properties* | *Tactics* | | | | Resolved Specifications |
|---|---|---|---|---|---|
| | Moving Vehicle Bomb *(a)* | Stationary Vehicle Bomb *(b)* | Exterior *(c)* | Forced Entry *(d)* | *(e)* |
| Anchor Bolt Type | | | | | |
| Anchor Bolt Diameter | | | | | |
| Anchor Bolt Embedment | | | | | |
| Maximum Anchor Bolt Spacing: Frame Corner To Bolt | | | | | |
| Maximum Anchor Bolt Spacing: Between Adjacent Bolts | | | | | |
| Removable Stop Anchor Bolt Type | | | | | |
| Removable Stop Anchor Bolt Diameter | | | | | |
| Number of Removable Stop Anchor Bolts Per Side | | | | | |
| Removable Stop Anchor Bolt Spacing: Frame Corner To Bolt | | | | | |
| Removable Stop Anchor Bolt Spacing: Between Adjacent Bolts | | | | | |

Does Anchorage Meet Design Requirements? ☐ Yes ☐ No

# Wall Selection Worksheet

| 1. Project/Building Identification | 2. Asset Identification | 3. Date |
|---|---|---|
| | | |

| *Wall Type* | *Tactic* | | | | | Resolved Thickness |
|---|---|---|---|---|---|---|
| | Moving Vehicle Bomb *(a)* | Stationary Vehicle Bomb *(b)* | Exterior *(c)* | Ballistics *(d)* | Forced Entry *(e)* | *(f)* |
| Wood Frame | | | | | | |
| Brick | | | | | | |
| Reinforced Concrete Block | | | | | | |
| Reinforced Concrete | | | | | | |

Does Wall Meet Design Requirements? ☐ Yes ☐ No

## Cross-Section Cost Factor Worksheet

| 1. Project/Building Identification | 2. Asset Identification | 3. Date |
|---|---|---|
| | | |

| Layer Number (a) | Layer Material (b) | Thickness (in) (c) | Table Number (d) | Layer Cost Factor (e) | Weight (lb/sq-ft) (f) | Interlayer Material (g) | Interlayer Thickness (h) | Interlayer Cost Factor (i) | Combined Cost Factor (j) = (e) + (i) |
|---|---|---|---|---|---|---|---|---|---|
| 1 | | | | | | | | | |
| 2 | | | | | | | | | |
| 3 | | | | | | | | | |
| 4 | | | | | | | | | |
| 5 | | | | | | | | | |
| 6 | | | | | | | | | |
| 7 | | | | | | | | | |
| 8 | | | | | | | | | |

| | | |
|---|---|---|
| Sum of Material Weights (lb/sq-ft) | (k) =S (f) | |
| Window Height (ft) | (l) | |
| Window Width (ft) | (m) | |
| Window Area (sq-ft) | (n) = (l) x (m) | |
| Cross-Section Weight (lb) | (o) = (k) x (n) | |

| | | |
|---|---|---|
| Sum of Material Cost Factors | (p) =S (j) | |
| Number of Windows | (q) | |
| Cross-Section Material Cost Factor | (r) = (n) x (p) x (q) | |
| Size Fabrication Cost Factor | (s) | |
| Weight Fabrication Cost Factor | (t) | |
| Material Fabrication Cost Factor | (u) | |
| Cross-Section Cost Factor | (v) = (r) x (s) x (t) x (u) | |

## Frame Cost Factor Worksheet

| 1. Project/Building Identification | 2. Asset Identification | 3. Date |
|---|---|---|
| | | |

| Description | Material (a) | Thickness (in.) (b) | Type Cost Factor (c) | Sub-frame Cost Factor (d) | Size (linear ft.) (e) | Cost Factor per Frame (f) = (c) x (d) x (e) | Number of Frames (g) | Frame Cost Factor (h) = (f) x (g) |
|---|---|---|---|---|---|---|---|---|
| | | | | | | | | |
| | | | | | | | | |
| | | | | | | | | |
| | | | | | | | | |
| | | | | | | | | |
| | | | | | | | | |
| | | | | | | | | |
| | | | | | | | | |
| | | | | | | | | |
| | | | | | | | | |
| | | | | | | | | |
| | | | | | | | | |
| | | | | | | | | |
| | | | | | | | | |
| | | | | | | | | |
| | | | | | | | | |

## Installation Cost Worksheet

| 1. Project/Building Identification | 2. Asset Identification | 3. Date |
|---|---|---|
| | | |

| Description | Wall Hardening *(a)* | Special Handling *(b)* | Wall Preparation *(c)* | Frame Alignment *(d)* | Sub-frame Alignment *(e)* | Cost per Window *(f) = (a) + (b) + (c) + (d) + (e)* | Number of Windows *(g)* | Installation Cost *(h) = (f) x (g)* |
|---|---|---|---|---|---|---|---|---|
| | | | | | | | | |
| | | | | | | | | |
| | | | | | | | | |
| | | | | | | | | |
| | | | | | | | | |
| | | | | | | | | |
| | | | | | | | | |
| | | | | | | | | |
| | | | | | | | | |
| | | | | | | | | |
| | | | | | | | | |
| | | | | | | | | |
| | | | | | | | | |
| | | | | | | | | |
| | | | | | | | | |
| | | | | | | | | |

## Initial Cost Worksheet

| 1. Project/Building Identification | 2. Asset Identification | 3. Date |
|---|---|---|
| | | |

| Description | Component | Cost Factor (a) | Base Unit Cost (b) | Component Cost (c) = (a) x (b) | Total Component Cost (d) = S (c) | Installation Cost (e) | Initial Cost (f) = (d) + (e) |
|---|---|---|---|---|---|---|---|
| | Cross-section | | | | | | |
| | Frame | | | | | | |
| | Cross-section | | | | | | |
| | Frame | | | | | | |
| | Cross-section | | | | | | |
| | Frame | | | | | | |
| | Cross-section | | | | | | |
| | Frame | | | | | | |
| | Cross-section | | | | | | |
| | Frame | | | | | | |
| | Cross-section | | | | | | |
| | Frame | | | | | | |
| | Cross-section | | | | | | |
| | Frame | | | | | | |
| | Cross-section | | | | | | |
| | Frame | | | | | | |

## Safevue Data Entry Worksheet

1. Project/Building Identification

2. Date

| Asset Identification | Glazing Data Entry | | | Explosives Data Entry | | | | | | | Algorithm Data Entry | | |
|---|---|---|---|---|---|---|---|---|---|---|---|---|---|
| | Height (in) | Width (in) | Bite (in) | Horizontal Offset (ft) | Horizontal Setback (ft) | Vertical Elevation (ft) | Charge Shape (H or S) | Explosives Type | TNT Equivalent Weight Factor | Explosive Weight (lb) | Critical Damping (%) | Number of Integration Time Steps | Probability of Failure |
| *(a)* | *(b)* | *(c)* | *(d)* | *(e)* | *(f)* | *(g)* | *(h)* | *(i)* | *(j)* | *(k)* | *(l)* | *(m)* | *(n)* |
| *1.* | | | | | | | | | | | | | |
| *2.* | | | | | | | | | | | | | |
| *3.* | | | | | | | | | | | | | |
| *4.* | | | | | | | | | | | | | |
| *5.* | | | | | | | | | | | | | |
| *6.* | | | | | | | | | | | | | |
| *7.* | | | | | | | | | | | | | |
| *8.* | | | | | | | | | | | | | |

## Safevue Analysis Worksheet

| 1. Project/Building Identification | 2. Asset Identification | 3. Date |
|---|---|---|
| | | |

| Cross-Section Description | | | | | | | | | | | | | | |
|---|---|---|---|---|---|---|---|---|---|---|---|---|---|---|
| Cross-Section Number | Plate Number | Material | Layer Thickness (b) | | | | | Plate Thickness | Cross-Section Thickness | Dynamic Load | Pass (P) or Fail (F) | Minimum Bite | Maximum Capacity | Load Ratio |
| | | (a) | 1 | 2 | 3 | 4 | 5 | (c) | (d) | (e) | (f) | (g) | (h) | (i) |
| 1 | 1 | | | | | | | | | | | | | |
| | 2 | | | | | | | | | | | | | |
| | 3 | | | | | | | | | | | | | |
| | 4 | | | | | | | | | | | | | |
| 2 | 1 | | | | | | | | | | | | | |
| | 2 | | | | | | | | | | | | | |
| | 3 | | | | | | | | | | | | | |
| | 4 | | | | | | | | | | | | | |
| 3 | 1 | | | | | | | | | | | | | |
| | 2 | | | | | | | | | | | | | |
| | 3 | | | | | | | | | | | | | |
| | 4 | | | | | | | | | | | | | |
| 4 | 1 | | | | | | | | | | | | | |
| | 2 | | | | | | | | | | | | | |
| | 3 | | | | | | | | | | | | | |
| | 4 | | | | | | | | | | | | | |
| 5 | 1 | | | | | | | | | | | | | |
| | 2 | | | | | | | | | | | | | |
| | 3 | | | | | | | | | | | | | |
| | 4 | | | | | | | | | | | | | |

# APPENDIX C

# SAFEVUE PROCEDURES

C.1 Introduction. This section provides two simplified procedures for using Safevue. The first is the Safevue Evaluation Procedure. Use it to evaluate existing windows. The second is the Safevue Selection Procedure. Use it to select plate and layer thicknesses for new and retrofit glazing systems.

C.1.1 Safevue User's Manual. The two procedures provided in this section use specific features of Safevue to accomplish their objectives. They are not tutorials and are not intended to explain or describe the features and capabilities of Safevue. Analysts are encouraged to read the Safevue User's Manual to learn more about the computer program and how to use it.

C.1.2 Installation. The procedures in this section assume that the user has successfully installed Safevue and is able to execute programs from the DOS command line. For instructions on installing the program, the analyst is referred to the Safevue User's Manual.

C.2 Safevue Evaluation Analysis Procedure. This procedure helps to evaluate the performance of an existing glazing system subjected to blast loading. It provides a set of structures that step an analyst through the Safevue computer program from data entry through results analysis. A process chart and description of the procedure are shown in Figure C-1.

C.2.1 Required Information. The following information is required for a Safevue evaluation analysis:

a) Worksheets (see Appendix B):
    1) Cross-Section Evaluation

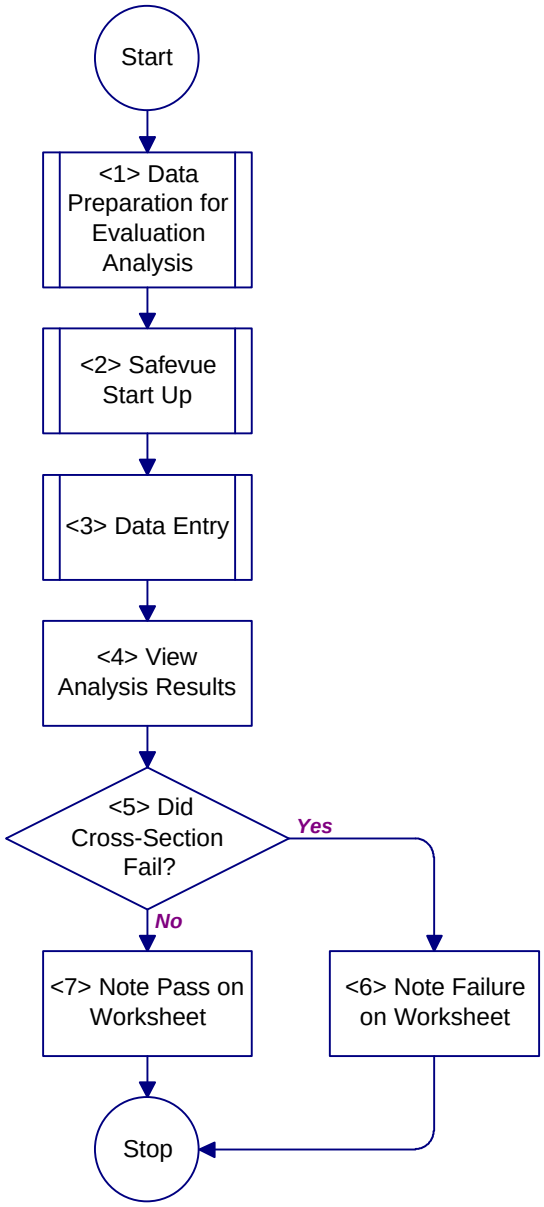


<1> **Data Preparation for Evaluation Analysis.** Prepare worksheets for Safevue data entry using Figure C-2. Proceed to <2>.

<2> **Safevue Start Up.** Begin executing the Safevue computer program using Figure C-6. Proceed to <3>.

<3> **Safevue Data Entry**. Enter data into Safevue program using Figure C-7. Proceed to <4>.

<4> **View Analysis Results.** The screen displays dynamic response of cross-section and denotes failure if it occurs. Proceed to <5>.

<5> **Did Cross-Section Fail?** If Safevue reports that the cross-section failed, proceed to <6>. If no failure is indicated, proceed to <7>.

<6> **Note Failure on Worksheet.** In the appropriate column for the specific tactic (vehicle bomb or exterior) and applicable row for the cross-section, enter the word "failed" on the Cross-Section Evaluation worksheet (see Appendix B for all worksheets). Check the "No" box in column (g) of the applicable row for the cross-section. Use Figure C-13 to select a cross-section that will survive an attack. Press the 'C' and "Enter" keys to display the Safevue Control Menu. Return to Figure 22.

<7> **Note Pass on Worksheet.** In the appropriate column for the specific tactic (vehicle bomb or exterior) and applicable row for the cross-section, enter the word "passed" on the Cross-Section Evaluation worksheet. Press the 'C' and "Enter" keys to display the Safevue Control Menu. Return to Figure 22.

**Figure C-1**
Process Chart and Description: Safevue Evaluation Analysis Procedure

C.3 Data Preparation for Evaluation Analysis Procedure. This procedure helps to prepare data worksheets for an existing glazing system subjected to blast loading. It provides a set of structures that step an analyst through glazing, explosives and algorithm data preparation. A process chart and description of the procedure are shown in Figure C-2.

C.3.1 Required Information. The following information is required for data preparation for an evaluation analysis:

a) Project identification
a) Asset identification. This information is determined using Figure D-3 and is recorded on the Glazing System Design Criteria Summary worksheet.
b) Worksheets (see Appendix B):
   1) Safevue Data Entry (SDE)
   2) Safevue Analysis (SA)

C.4 Glazing Data Preparation for Evaluation Analysis . This procedure helps to prepare data worksheets for an existing glazing system subjected to blast loading. It provides a set of structures that step an analyst through glazing data preparation. A process chart and description of the procedure are shown in Figure C-3.

<1> **Create Safevue Data Entry Worksheet.** On a Safevue Data Entry worksheet, enter a project/ building identification and the current date. In the first row under column (a), enter the asset identification. The same Safevue Data Entry worksheet may be used for additional assets that are part of the same project. Proceed to <2>.

<2> **Create Safevue Analysis Worksheet.** On a Safevue Analysis worksheet, enter a project/building identification, asset identification, and the current date. Proceed to <3>.

<3> **Glazing Data Preparation for Evaluation Analysis.** Prepare glazing data for entry using Figure C-3. Proceed to <4>.

<4> **Explosives Data Preparation.** Prepare explosives data for entry using Figure C-4. Proceed to <5>.

<5> **Algorithm Data Preparation.** Prepare algorithm data for entry using Figure C-5. Return to Figure C-1.

**Figure C-2**
Process Chart and Description: Data Preparation for Evaluation Analysis Procedure

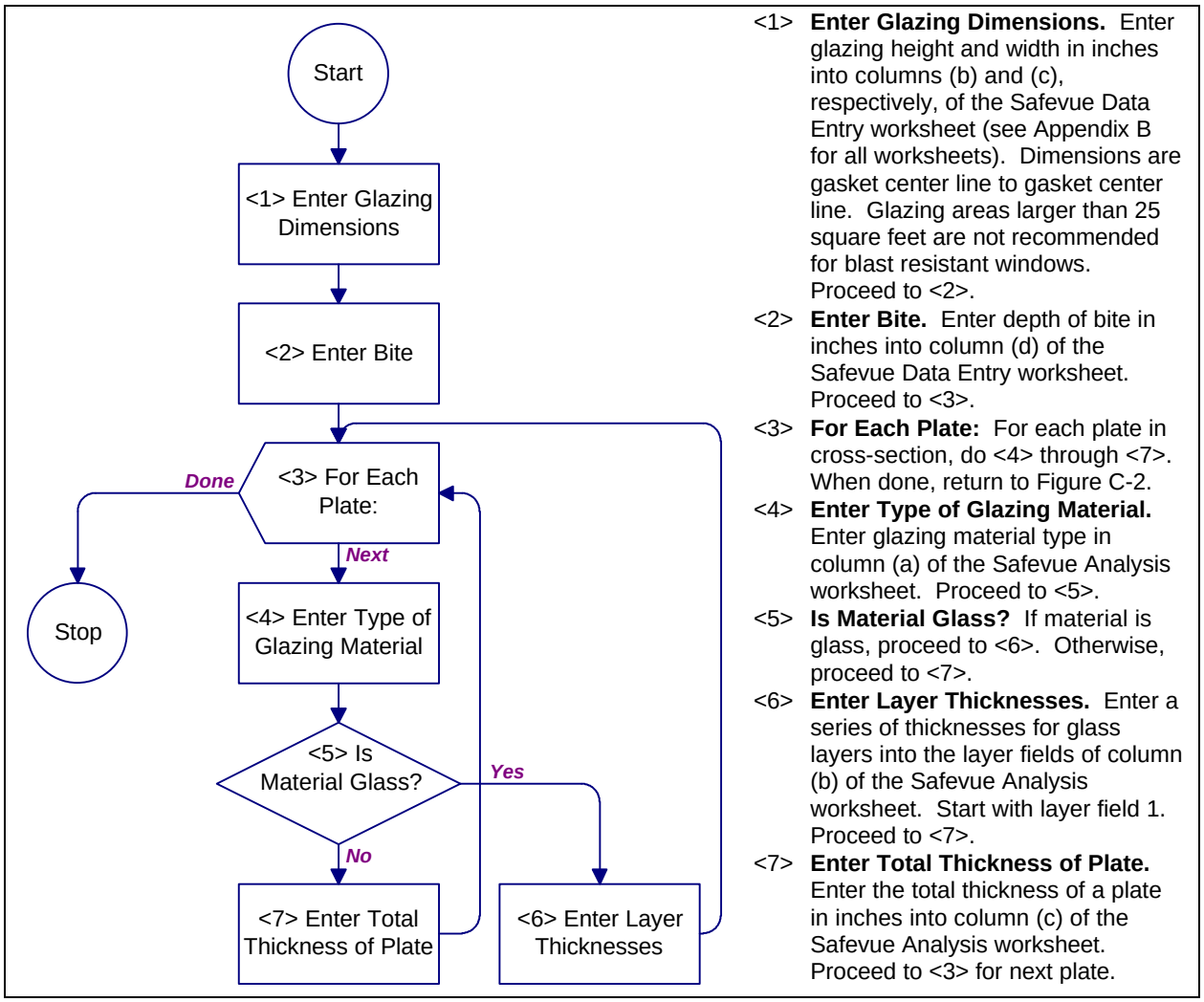


**Figure C-3**
Process Chart and Description: Glazing Data Preparation for Evaluation Analysis Procedure

C.4.1 Required Information. The following information is required for data preparation for an evaluation analysis:

a) Glazing height, gasket center line to gasket center line
b) Glazing width, gasket center line to gasket center line
c) Bite depth
d) Number of stacked plates in cross-section
e) For each stacked plate:

1) Type of glazing material
2) Thickness of plate
3) Number of layers in plate
4) For each layer in a glass plate:
   i) Layer thickness

f) Worksheets (see Appendix B):
1) Cross-Section Evaluation
2) Safevue Data Entry (SDE)
3) Safevue Analysis (SA)

C.5 Explosives Data Preparation Procedure. This procedure helps to prepare a data worksheet for a glazing system subjected to blast loading. It provides a set of structures that step an analyst through explosives data preparation. A process chart and description of the procedure are shown in Figure C-4.

C.5.1 Required Information. The following information is required for data preparation for an evaluation analysis:

a) Horizontal offset coordinate
b) Horizontal setback coordinate
c) Vertical elevation coordinate
d) Worksheets (see Appendix B):
1) Safevue Data Entry (SDE)

C.6 Algorithm Data Preparation. This procedure helps to prepare a data worksheet for a glazing system subjected to blast loading. It provides a set of structures that step an analyst through algorithm data preparation. A process chart and description of the procedure are shown in Figure C-5.

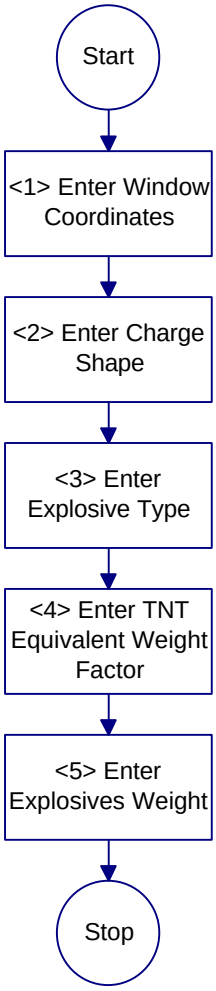


<1> **Enter Window Coordinates.** Enter the horizontal offset, horizontal setback, and vertical elevation coordinates of the window relative to charge location into columns (e), (f) and (g), respectively, of the Safevue Data Entry worksheet (see Appendix B for all worksheets). Coordinate units are feet. Refer to Figure C-11 for spatial orientation of coordinates. Proceed to <2>.

<2> **Enter Charge Shape.** Enter an "H" in column (h) of the Safevue Data Entry worksheet to specify a hemispherical shape. Refer to the Safevue User's Manual to apply the spherical charge shape. Proceed to <3>.

<3> **Enter Explosive Type.** Enter TNT as the explosive type in column (i) of the Safevue Data Entry worksheet. Refer to the Safevue User's Manual for selecting other types of explosives. Proceed to <4>.

<4> **Enter TNT Equivalent Weight Factor.** Leave column (j) blank if TNT is the explosive type. Refer to the Safevue User's Manual to use other TNT equivalent weight factors. Proceed to <5>.

<5> **Enter Explosives Weight.** Enter the charge weight in pounds into column (k) of the Safevue Data Entry worksheet. If this is an analysis for a selection application, return to Figure C-15. Otherwise, return to Figure C-2.

**Figure C-4**
Process Chart and Description: Explosives Data Preparation Procedure

C.6.1 Required Information. The following information is required for data preparation for an algorithm:

a) Critical damping percent
b) Number of integration time steps
c) Probability of failure for glass
d) Worksheets (see Appendix B):
    1) Safevue Data Entry (SDE)

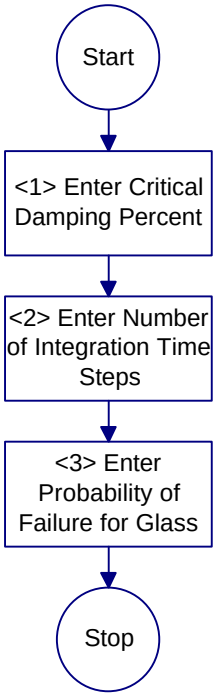


<1> **Enter Critical Damping Percent.** Leave column (l) of the Safevue Data Entry worksheet (see Appendix B for all worksheets) blank to accept the Safevue default critical damping percent. Refer to the Safevue User's Manual to use a different critical damping percent. Proceed to <2>.

<2> **Enter Number of Integration Time Steps.** Leave column (m) of the Safevue Data Entry worksheet blank to accept the Safevue default number of integration time steps. Refer to the Safevue User's Manual to use a different number of integration time steps. Proceed to <3>.

<3> **Enter Probability of Failure of Glass.** Leave column (n) of the Safevue Data Entry worksheet blank to accept the Safevue default probability of failure. Refer to the Safevue User's Manual to use a different probability of failure. If this is an analysis for a selection application, return to Figure C-15. Otherwise, return to Figure C-2.

**Figure C-5**
Process Chart and Description: Algorithm Data Preparation Procedure

C.7 Safevue Startup Procedure. This procedure leads the analyst through the process of starting the Safevue computer program. A process chart and description of the procedure are shown in Figure C-6.

C.7.1 Required Information. The following information is required for the Safevue startup procedure:

a) Worksheets (see Appendix B):
   1) Safevue Data Entry

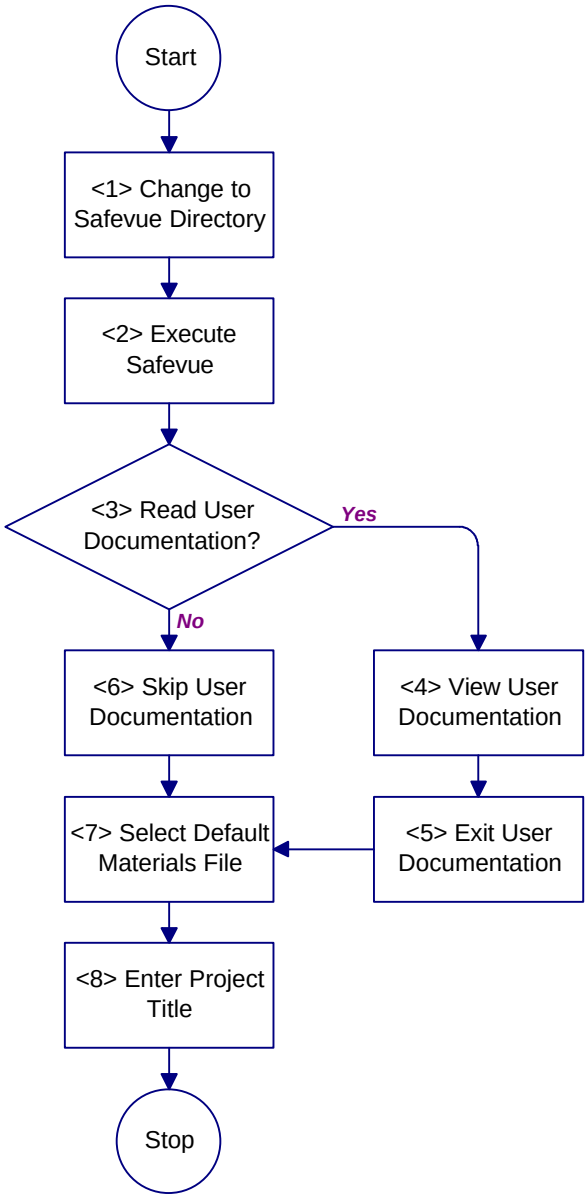


<1> **Change to Safevue Directory.** From the DOS command line, enter "CD \Safevue" and then press the "Enter" key to change to the Safevue directory. Proceed to <2>.

<2> **Execute Safevue.** From the DOS command line, enter "Safevue" and then press the "Enter" key to begin program execution. Proceed to <3>.

<3> **Read User Documentation?** Proceed to <4> to read the user documentation. Proceed to <6> to skip the user documentation.

<4> **View User Documentation.** Press the 'Y' and "Enter" keys to access user documentation. Use cursor keys to scroll the documentation. Proceed to <5>.

<5> **Exit User Documentation.** Press the "Esc" key to exit user documentation. Proceed to <7>.

<6> **Skip User Documentation.** Press the 'N' and "Enter" keys to skip user documentation. Proceed to <7>.

<7> **Select Default Materials File.** Press the "Enter" key to use the default file name when requested to "Enter name of MATERIALS FILE." Refer to the Safevue user documentation for creating and using material files. Proceed to <5>.

<8> **Enter Project Title.** Enter the Project\Building Identification from the Safevue Data Entry worksheet (see Appendix B for all worksheets) as the project title. Return to Figure C-1.

**Figure C-6**
Process Chart and Description: Safevue Startup Procedure

C.8 Data Entry Procedure. This procedure contains structures for entering glazing, explosives, and algorithm data into the Safevue computer program. This procedure will assist in analyzing the performance of glazing systems. A process chart and description of the procedure are shown in Figure C-7.

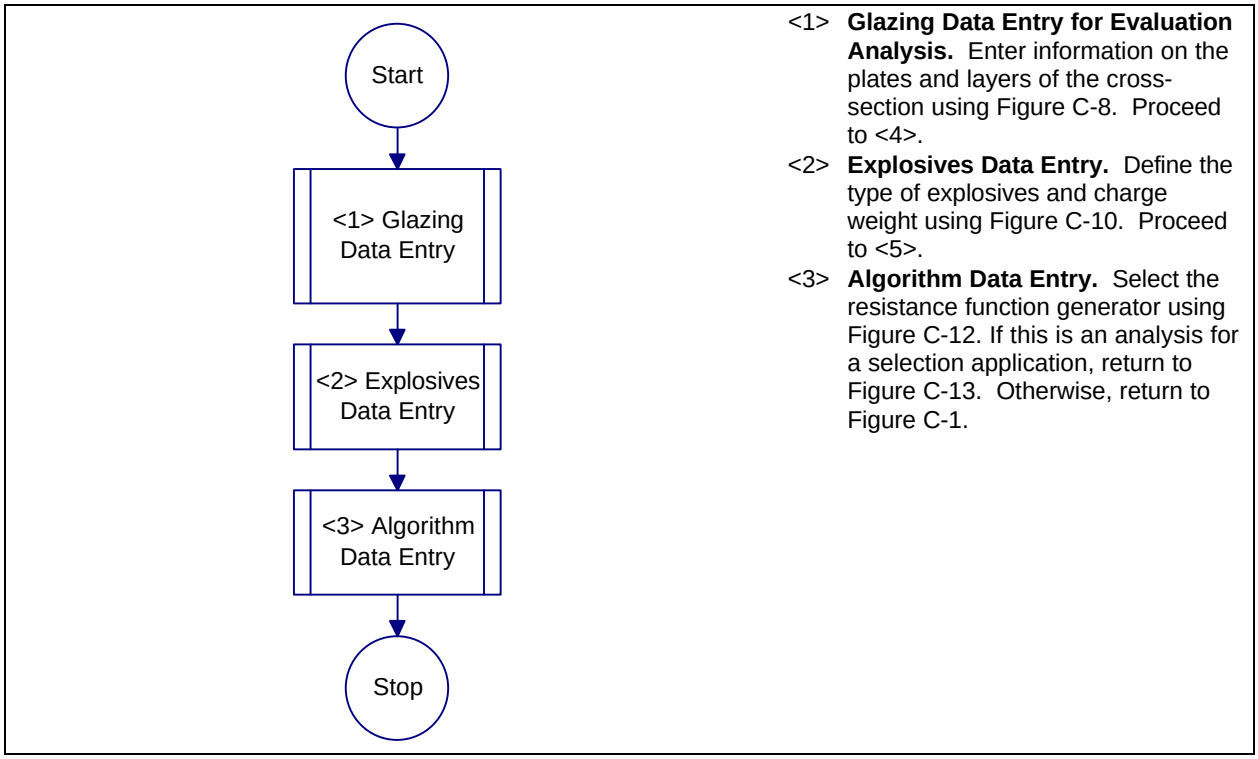


**Figure C-7**
Process Chart and Description: Data Entry Procedure

C.8.1 Required Information. The following information is required for the Data Entry procedure:

a) Worksheets (see Appendix B):
   1) None

C.9 Glazing Data Entry Procedure. This procedure contains structures for entering glazing dimensions, number of stacked plates, and thickness codes for layers within plates. This procedure will assist in analyzing the performance of glazing systems. A process chart and description of the procedure are shown in Figure C-8 and Figure C-9, respectively.

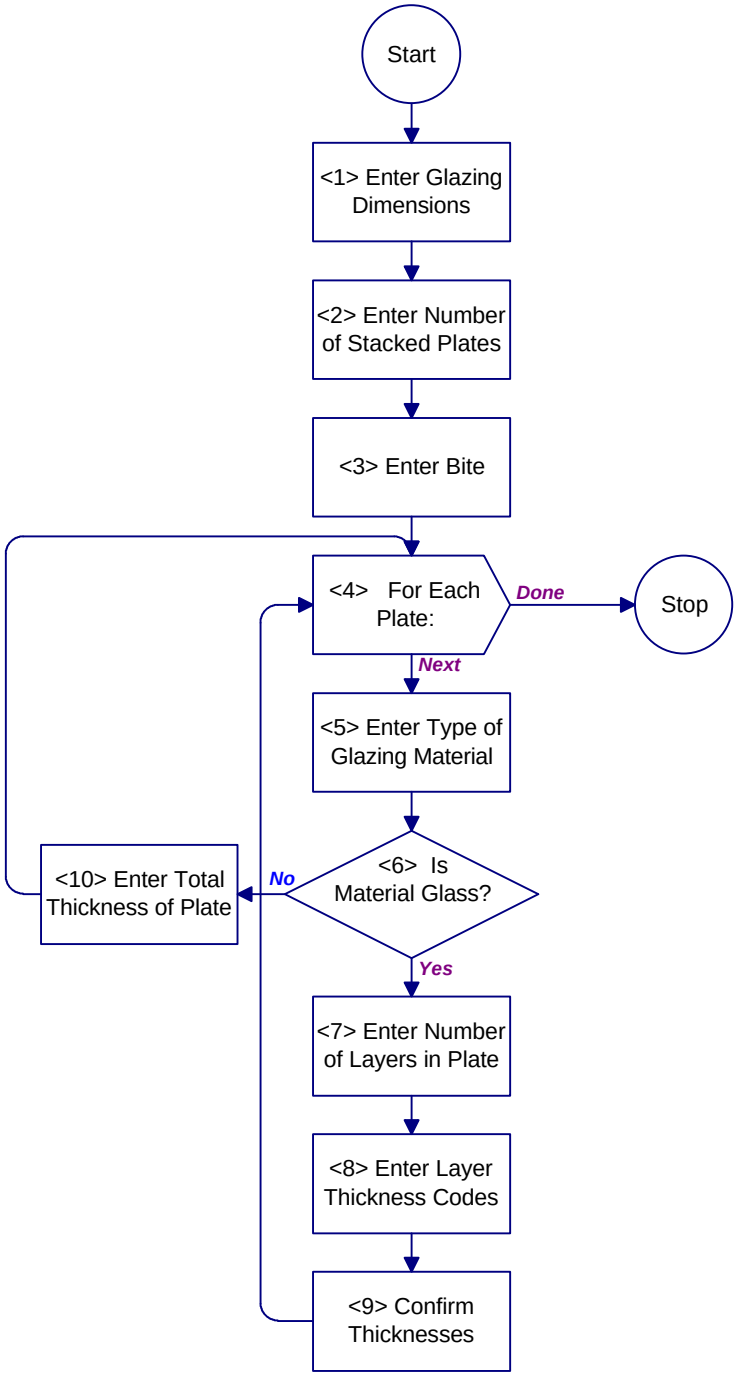


Refer to Figure C-9 for description of procedure.

**Figure C-8**
Process Chart: Glazing Data Entry Procedure

<1> **Enter Glazing Dimensions.** Enter glazing height and width from columns (b) and (c), respectively, of the Safevue Data Entry worksheet (see Appendix B for all worksheets). Proceed to <2>.
<2> **Enter Number of Stacked Plates.** Enter total number of plates from current cross-section on the Safevue Analysis worksheet. Proceed to <3>.
<3> **Enter Bite.** Enter depth of bite from column (d) of the Safevue Data Entry worksheet. For selection application, if column (d) is blank, press the "Enter" key. Proceed to <4>.
<4> **For Each Plate:** For each plate in cross-section, do <5> through <10>. When done, return to Figure C-7.
<5> **Enter Type of Glazing Material.** Select letter from displayed list on screen that corresponds to material listed in column (a) of the Safevue Analysis worksheet. For this input, Safevue is case-sensitive. Proceed to <6>.
<6> **Is Material Glass?** If material is glass, proceed to <7>. Otherwise, proceed to <10>.
<7> **Enter Number of Layers in Plate.** For laminated glass plates, provide the number of bonded layers from column (b) of the Safevue Analysis worksheet. Proceed to <8>.
<8> **Enter Layer Thickness Codes.** Safevue displays nominal thickness codes for glass layers. Enter a series of codes appropriate for the glass layers listed in column (b) of the Safevue Analysis worksheet. Proceed to <9>.
<9> **Confirm Thicknesses.** Press "Enter" to confirm that the thickness codes were entered correctly. Proceed to <4> for next plate.
<10> **Enter Total Thickness of Plate.** Provide the total thickness of a plate from column (c) of the Safevue Analysis worksheet. Proceed to <4> for next plate.

**Figure C-9**
Description: Glazing Data Entry Procedure

C.9.1 Required Information. The following information is required for glazing data entry:

a) Worksheets (see Appendix B):
   1) Safevue Data Entry (SDE)
   2) Safevue Analysis (SA)

C.10 Explosives Data Entry Procedure. This procedure provides structures for entering blast load model, window coordinates, charge shape, equivalent weight factor, and charge weight. A process chart and description of the procedure are shown in Figure C-10.

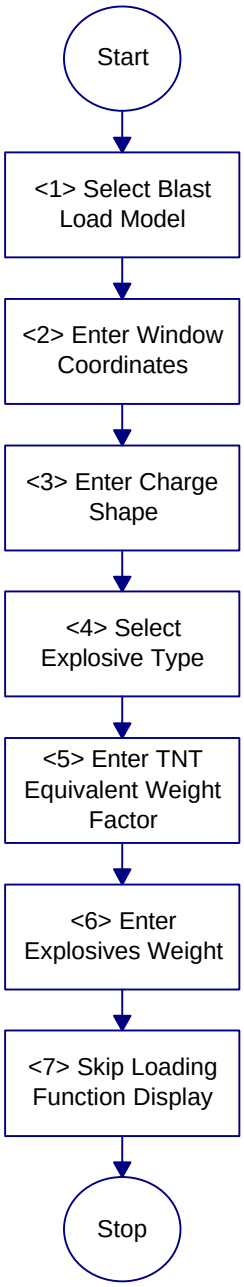


<1> **Select Blast Load Model.** From the Blast Load Menu, select "DOE\TIC-11268 TNT Equivalencies" and press the "Enter" key. Refer to the Safevue User's Manual to use other blast load models. Proceed to <2>.

<2> **Enter Window Coordinates.** Enter the horizontal offset, horizontal setback, and vertical elevation coordinates of the window relative to charge location from columns (e), (f), and (g), respectively, of the Safevue Data Entry worksheet (see Appendix B for all worksheets). Press the "Enter" key. Proceed to <3>.

<3> **Enter Charge Shape.** Type an "H" or "S" from column (h) of the Safevue Data Entry Worksheet and press the "Enter" key. Proceed to <4>.

<4> **Select Explosive Type.** Match the explosive type in column (i) with a type displayed on the screen. Enter the number associated with the matching type on the screen (e.g., TNT is "23") and press the "Enter" key. Proceed to <5>.

<5> **Enter TNT Equivalent Weight Factor.** For an "I" or "P" in column (j) of the Safevue Data Entry worksheet, type the letter and press the "Enter" key. For a blank column (j), simply press the "Enter" key. Proceed to <6>.

<6> **Enter Explosives Weight.** Enter the charge weight in pounds from column (k) of the Safevue Data Entry worksheet and press the "Enter" key. Proceed to <7>.

<7> **Skip Loading Function Display.** Press the "Enter" key to skip loading function display. Press the 'Y' and "Enter" keys to view the loading function. Refer to the Safevue User's Manual to apply the loading function display features. Return to Figure C-7.

**Figure C-10**
Process Chart and Description: Explosives Data Entry Procedure

C.10.1 Required Information. The following information is required for explosives data entry:

a) Worksheets (see Appendix B):
   1) Safevue Date Entry (SDE)

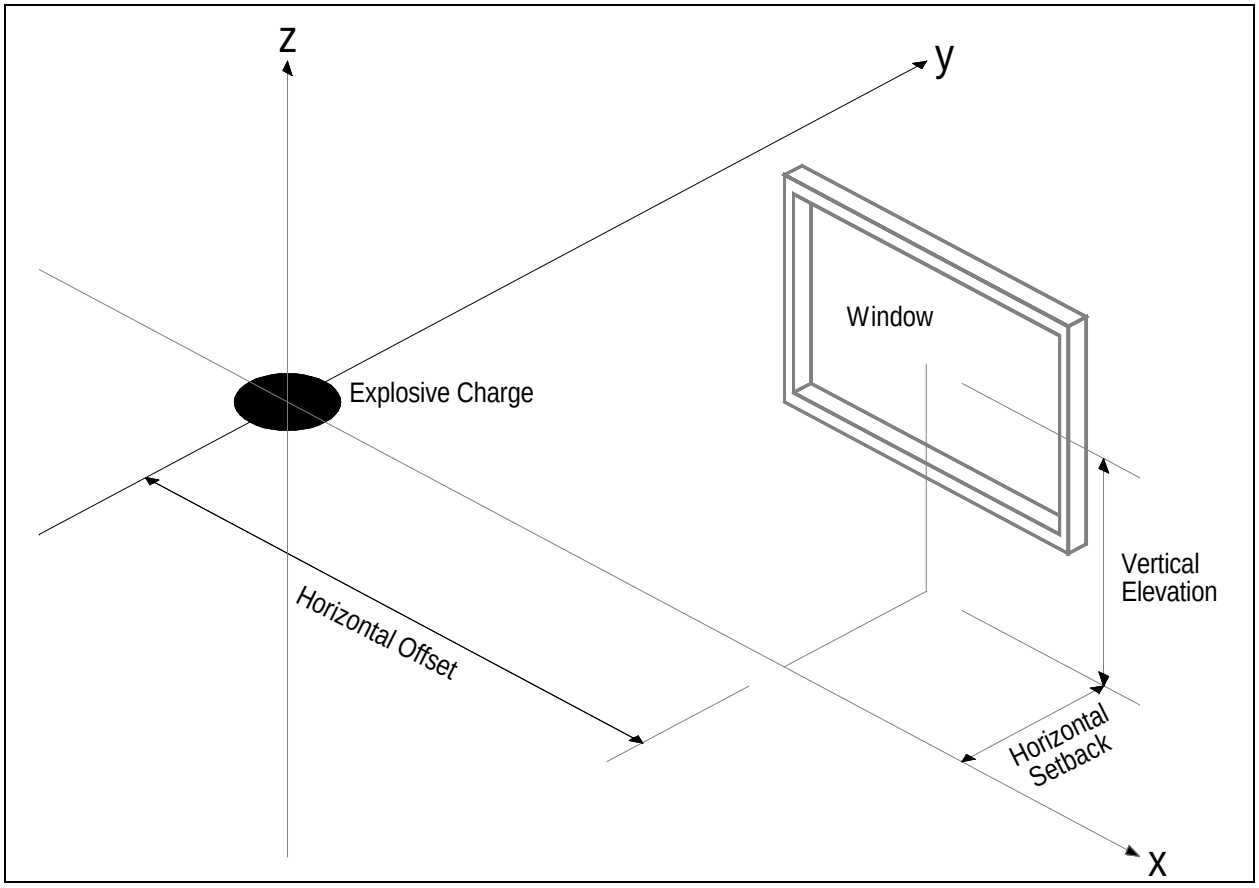


**Figure C-11**
Spatial Orientation of Coordinates

C.11 Algorithm Data Entry Procedure. This procedure provides structures for entering critical damping percent, number of integration time steps, and probability of failure for glass. A process chart and description of the procedure are shown in Figure C-12.

C.11.1 Required Information. The following information is required for glazing data entry:

a) Worksheets (see Appendix B):
   1) Safevue Date Entry (SDE)

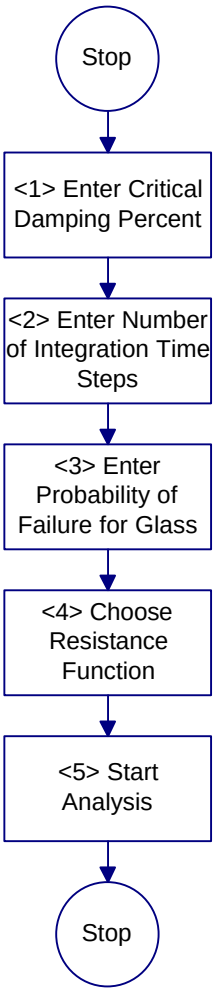


<1> **Enter Critical Damping Percent.** If column (l) of the Safevue Data Entry worksheet (see Appendix B for all worksheets) is not blank, enter the value and press the "Enter" key. If column (l) is blank, simply press the "Enter" key. Proceed to <2>.

<2> **Enter Number of Integration Time Steps.** If column (m) of the Safevue Data Entry worksheet is not blank, enter the value and press the "Enter" key. If column (m) is blank, simply press the "Enter" key. Proceed to <3>.

<3> **Enter Probability of Failure of Glass.** If column (n) of the Safevue Data Entry worksheet is not blank, enter the value and press the "Enter" key. If column (n) is blank, simply press the "Enter" key. Proceed to <4>.

<4> **Choose Resistance Function.** Use the cursor keys to highlight Beason-Vallabhan on the Choose Resistance Function Generator menu. Press the "Enter" key to select Beason-Vallabhan as the resistance function generator. Refer to the Safevue User's Manual for descriptions of the resistance function generators included with Safevue. Proceed to <5>.

<5> **Start Analysis.** Safevue displays a table of segments from which the resistance function is built. Refer to the Safevue User's Manual for guidance on interpreting the composite resistance function. Press the 'C' key to begin analysis. If this is an analysis for a selection application, return to Figure C-13. Otherwise, return to Figure C-1.

**Figure C-12**
Process Chart and Description: Algorithm Data Entry Procedure

C.12 Safevue Selection Analysis Procedure. This procedure helps to select a glazing system that will withstand blast loading. It provides a set of structures that step an analyst through the Safevue computer program from data entry through results analysis. A process chart and description of the procedure are shown in Figure C-13 and Figure C-14, respectively.

C.12.1 Required Information. The following information is required for a Safevue selection analysis:

a) Worksheets (see Appendix B):
   1) Safevue Analysis (SA)
   2) Cross-Section Selection (CSS)

C.13 Data Preparation for Selection Analysis Procedure. This procedure helps to prepare data worksheets for selecting a glazing system subjected to blast loading. It provides a set of structures that step an analyst through glazing, explosives, and algorithm data preparation. A process chart and description of the procedure are shown in Figure C-15.

C.13.1 Required Information. The following information is required for data preparation for an evaluation analysis:

a) Project identification
a) Asset identification. This information is determined using Figure D-3 and is recorded on the Glazing System Design Criteria Summary worksheet.
b) Worksheets (see Appendix B):
   1) Safevue Data Entry (SDE)
   2) Safevue Analysis (SA)

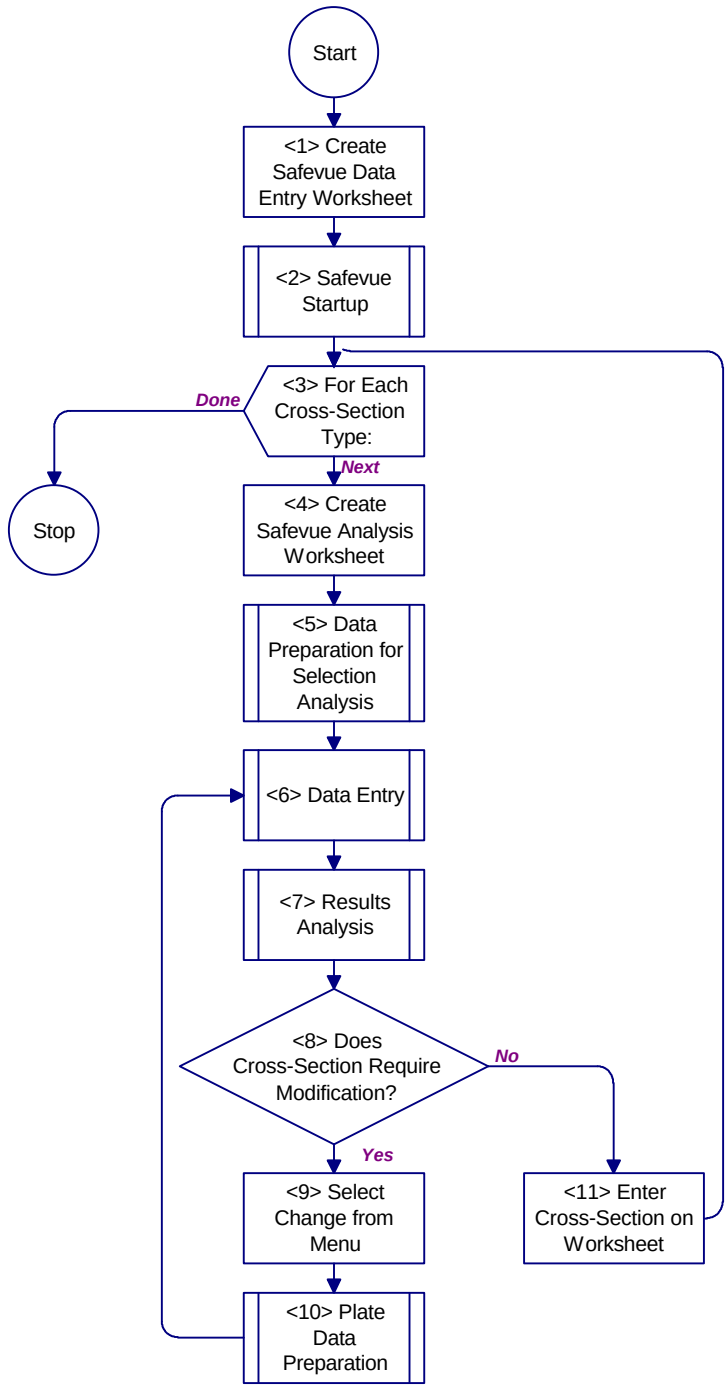


Refer to Figure C-14 for description of procedure.

**Figure C-13**
Process Chart: Safevue Selection Analysis Procedure

<1> **Create Safevue Data Entry Worksheet.** On a Safevue Data Entry worksheet, enter a project/building identification, asset identification, and the current date. Proceed to <2>.

<2> **Safevue Startup.** Begin executing the Safevue computer program using Figure C-6. Proceed to <3>.

<3> **For Each Cross-Section Type:** For each cross-section type on the Cross-Section Selection worksheet that is being considered, do <4> through <9>. When done, return to Figure 24.

<4> **Data Preparation for Selection Analysis.** Prepare worksheets for Safevue data entry using Figure C-15. Proceed to <5>.

<5> **Create Safevue Analysis Worksheet.** On a Safevue Analysis worksheet, enter a project/building identification and the current date. In the first row under column (a), enter the asset identification. Proceed to <6>.

<6> **Data Entry.** Enter data into Safevue program using Figure C-7. Proceed to <7>.

<7> **Results Analysis.** Analyze the simulation results to determine if the cross-section requires modification. Use Figure C-19. Proceed to <8>.

<8> **Does Cross-Section Require Modification?** If the cross-section must be modified and another simulation run, proceed to <9>. If no change to the cross-section is needed, proceed to <11>.

<9> **Select Change from Menu.** From the Safevue Control Menu, select item K, "Change GLAZING and RE-RUN." Proceed to <10>.

<10> **Plate Data Preparation:** Prepare data for each plate in cross-section using Figure C-18. Proceed to <6>.

<11> **Enter Cross-Section on Worksheet.** From the Safevue Analysis worksheet (see Appendix B for all worksheets), get the cross-section total thickness from column (d). In the appropriate column for the specific tactic (vehicle bomb or exterior) and applicable row for the cross-section, enter the total cross-section thickness (and other material thicknesses, if applicable) on the Cross-Section Selection worksheet. Proceed to <3> for next cross-section.

**Figure C-14**
Description: Safevue Selection Analysis Procedure

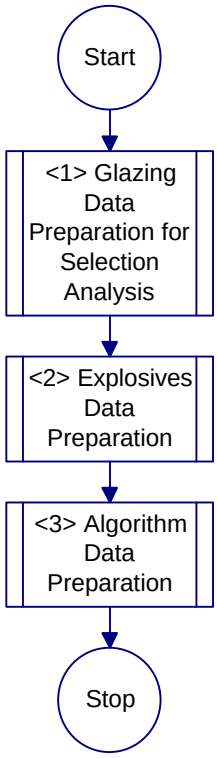


<1> **Glazing Data Preparation for Selection Analysis.** Prepare glazing data for entry using Figure C-16. Proceed to <2>.

<2> **Explosives Data Preparation.** Prepare explosives data for entry using Figure C-4. Proceed to <3>.

<3> **Algorithm Data Preparation.** Prepare algorithm data for entry using Figure C-5. Return to Figure C-13.

**Figure C-15**
Process Chart and Description: Data Preparation for Selection Analysis Procedure

C.14 Glazing Data Preparation for Selection Analysis Procedure. This procedure helps to prepare data worksheets for selecting a glazing system subjected to blast loading. It provides a set of structures that step an analyst through glazing data preparation. A process chart and description of the procedure are shown in Figure C-16 and Figure C-17, respectively.

C.14.1 Required Information. The following information is required for data preparation for an evaluation analysis:

a) Glazing height, gasket center line to gasket center line
b) Glazing width, gasket center line to gasket center line
c) Number of stacked plates in cross-section
d) Worksheets (see Appendix B):
    1) Safevue Data Entry (SDE)

2) Safevue Analysis (SA)

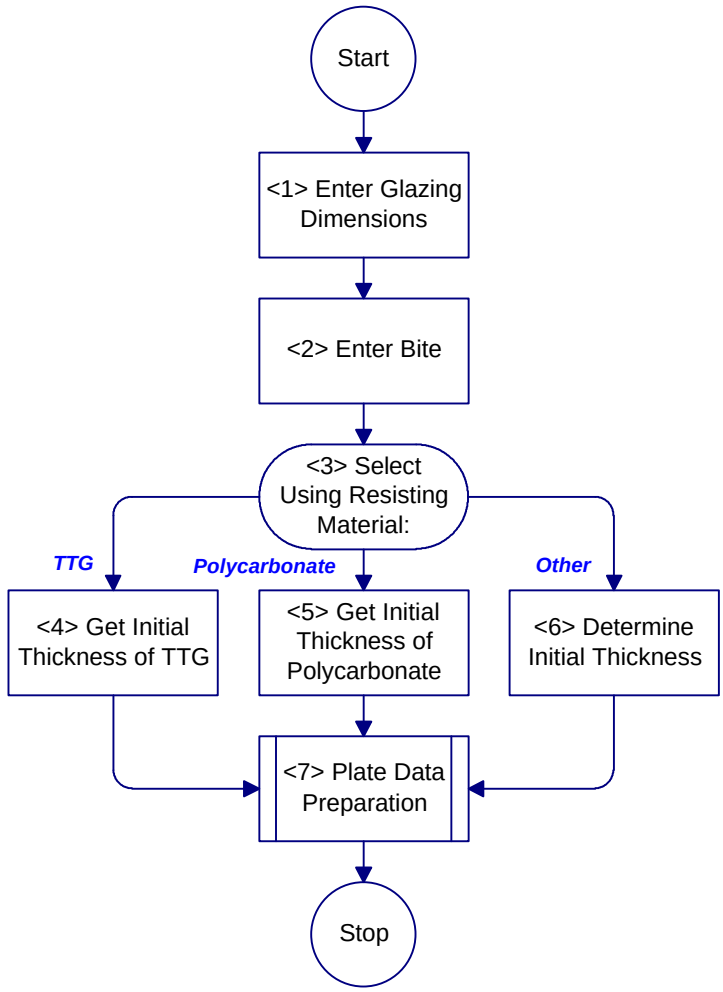


Refer to Figure C-17 for description of procedure.

**Figure C-16**
Process Chart: Glazing Data Preparation for Selection Analysis Procedure

<1> **Enter Glazing Dimensions.** Enter glazing height and width in inches into columns (b) and (c), respectively, of the Safevue Data Entry worksheet (see Appendix B for all worksheets). Dimensions are gasket center line to gasket center line. Safevue has a glazing area upper limit of 25 square feet. Proceed to <2>.

<2> **Enter Bite.** Let SafeVue compute bite depth, leave column (d) blank. Proceed to <3>.

<3> **Select Using Resisting Material:** If resisting material in cross-section is thermally tempered glass, proceed to <4>. If resisting material in cross-section is polycarbonate, proceed to <5>. Otherwise, proceed to <7> for other materials.

<4> **Get Minimum Thickness of TTG.** In Table C-1, use charge weight and window aspect ratio to determine from which table to get a minimum cross-section. Go to the appropriate table and select a cross-section based on plate dimensions and stand off distance. For charge weights or aspect ratios that are outside the ranges provided by the tables, the analyst must provide an initial thickness. Proceed to <7>.

<5> **Get Minimum Thickness of Polycarbonate.** In Table C-2, use charge weight and window aspect ratio to determine from which table to get a minimum cross-section. Go to the appropriate table and select a cross-section based on plate dimensions and stand off distance. For charge weights or aspect ratios that are outside the ranges provided by the tables, the analyst must provide an initial thickness. Proceed to <7>.

<6> **Determine Initial Thickness.** The handbook includes minimum thickness tables for TTG and polycarbonate. Other materials are beyond the scope of the handbook. The analyst must provide an initial thickness.

<7> **Plate Data Preparation:** Prepare data for each plate in cross-section using Figure C-18 Return to Figure C-15.

**Figure C-17**

Description: Glazing Data Preparation for Selection Analysis Procedure

**Table C-1**

Minimum Thickness Table Selection for Thermally Tempered Glass

| Aspect Ratio | Units of Measure | Charge Weight, lb (kg) | | | |
|---|---|---|---|---|---|
| | | 50 (23) | 220 (100) | 500 (230) | 1000 (450) |
| 1 | English | Table C-3 | Table C-5 | Table C-7 | Table C-9 |
| | Metric | Table C-4 | Table C-6 | Table C-8 | Table C-10 |
| 1.5 | English | Table C-11 | Table C-13 | Table C-15 | Table C-17 |
| | Metric | Table C-12 | Table C-14 | Table C-16 | Table C-18 |
| 2 | English | Table C-19 | Table C-21 | Table C-23 | Table C-25 |
| | Metric | Table C-20 | Table C-22 | Table C-24 | Table C-26 |
| 3 | English | Table C-27 | Table C-29 | Table C-31 | Table C-33 |
| | Metric | Table C-28 | Table C-30 | Table C-32 | Table C-34 |

**Table C-2**
Minimum Thickness Table Selection for Polycarbonate

| Aspect Ratio | Charge Weight, lb (kg) | | | |
|---|---|---|---|---|
| | 50 (23) | 220 (100) | 500 (230) | 1000 (450) |
| 1 | Table C-35 | Table C-36 | Table C-37 | Table C-38 |
| 1.5 | Table C-39 | Table C-40 | Table C-41 | Table C-42 |
| 2 | Table C-43 | Table C-44 | Table C-45 | Table C-46 |
| 3 | Table C-47 | Table C-48 | Table C-49 | Table C-50 |

**Table C-3**
Minimum Thickness of Thermally Tempered Glass (in.) to Survive Incident Overpressure from 50-lb TNT, Aspect Ratio, a/b = 1.0

| Plate Dimensions (in.) | | Standoff Distance (ft) | | | |
|---|---|---|---|---|---|
| a | b | 60 | 100 | 200 | 300 |
| 12 | 12 | 1/8, 1/8 | 1/8, 1/8 | 1/8, 1/8 | 1/8, 1/8 |
| 18 | 18 | 1/4, 1/8 | 1/8, 1/8 | 1/8, 1/8 | 1/8, 1/8 |
| 24 | 24 | 1/4, 1/4 | 1/8, 1/8 | 1/8, 1/8 | 1/8, 1/8 |
| 30 | 30 | 3/8, 1/4 | 1/8, 1/8 | 1/8, 1/8 | 1/8, 1/8 |
| 36 | 36 | 3/8, 1/4 | 1/4, 1/8 | 1/8, 1/8 | 1/8, 1/8 |
| 42 | 42 | 3/8, 3/8 | 1/4, 1/8 | 1/8, 1/8 | 1/8, 1/8 |
| 48 | 48 | 3/8, 3/8 | 1/4, 1/4 | 1/4, 1/8 | 1/8, 1/8 |
| 54 | 54 | 3/8, 3/8 | 1/4, 1/4 | 1/4, 1/8 | 1/8, 1/8 |
| 60 | 60 | 1/2, 3/8 | 3/8, 1/8 | 3/8, 1/8 | 1/8, 1/8 |

**Table C-4**
Minimum Thickness of Thermally Tempered Glass (mm) to Survive Incident Overpressure from 23-kg TNT, Aspect Ratio, a/b = 1.0

| Plate Dimensions (m) | | Standoff Distance (m) | | | |
|---|---|---|---|---|---|
| a | b | 20 | 30 | 60 | 90 |
| 0.30 | 0.30 | 3, 3 | 3, 3 | 3, 3 | 3, 3 |
| 0.45 | 0.45 | 6, 3 | 3, 3 | 3, 3 | 3, 3 |
| 0.60 | 0.60 | 6, 6 | 3, 3 | 3, 3 | 3, 3 |
| 0.75 | 0.75 | 9, 6 | 3, 3 | 3, 3 | 3, 3 |
| 0.90 | 0.90 | 9, 6 | 6, 3 | 3, 3 | 3, 3 |
| 1.05 | 1.05 | 9, 9 | 6, 3 | 3, 3 | 3, 3 |
| 1.20 | 1.20 | 9, 9 | 6, 6 | 6, 3 | 3, 3 |
| 1.35 | 1.35 | 9, 9 | 6, 6 | 6, 3 | 3, 3 |
| 1.50 | 1.50 | 12, 9 | 12, 9 | 9, 3 | 3, 3 |

**Table C-5**
Minimum Thickness of Thermally Tempered Glass (in.) to Survive Incident Overpressure from 220-lb TNT, Aspect Ratio, a/b = 1.0

| Plate Dimensions (in.) | | Standoff Distance (ft) | | | |
|---|---|---|---|---|---|
| a | b | 60 | 100 | 200 | 300 |
| 12 | 12 | 1/4, 1/8 | 1/8, 1/8 | 1/8, 1/8 | 1/8, 1/8 |
| 18 | 18 | 3/8, 1/4 | 1/4, 1/8 | 1/8, 1/8 | 1/8, 1/8 |
| 24 | 24 | 3/8, 3/8 | 1/4, 1/4 | 1/8, 1/8 | 1/8, 1/8 |
| 30 | 30 | 1/2, 1/2 | 3/8, 1/4 | 1/4, 1/8 | 1/8, 1/8 |
| 36 | 36 | 3/8, 3/8, 3/8 | 3/8, 3/8 | 1/4, 1/8 | 1/8, 1/8 |
| 42 | 42 | 1/2, 3/8, 3/8 | 3/8, 3/8 | 1/4, 1/8 | 1/4, 1/8 |
| 48 | 48 | 1/2, 1/2, 3/8 | 1/2, 3/8 | 1/4, 1/4 | 1/4, 1/8 |
| 54 | 54 | 1/2, 1/2, 1/2 | 1/2, 1/2 | 3/8, 1/4 | 1/4, 1/8 |
| 60 | 60 | 5/8, 1/2, 1/2 | 1/2, 1/2 | 3/8, 1/4 | 1/4, 1/8 |

**Table C-6**
Minimum Thickness of Thermally Tempered Glass (mm) to Survive Incident Overpressure from 100-kg TNT, Aspect Ratio, a/b = 1.0

| Plate Dimensions (m) | | Standoff Distance (m) | | | |
|---|---|---|---|---|---|
| a | b | 20 | 30 | 60 | 90 |
| 0.30 | 0.30 | 6, 3 | 3, 3 | 3, 3 | 3, 3 |
| 0.45 | 0.45 | 9, 6 | 6, 3 | 3, 3 | 3, 3 |
| 0.60 | 0.60 | 9, 9 | 6, 6 | 3, 3 | 3, 3 |
| 0.75 | 0.75 | 12, 12 | 9, 6 | 6, 3 | 3, 3 |
| 0.90 | 0.90 | 9, 9, 9 | 9, 9 | 6, 3 | 3, 3 |
| 1.05 | 1.05 | 12, 9, 9 | 9, 9 | 6, 3 | 6, 3 |
| 1.20 | 1.20 | 12, 12, 9 | 12, 9 | 6, 6 | 6, 3 |
| 1.35 | 1.35 | 12, 12, 12 | 12, 12 | 9, 6 | 6, 3 |
| 1.50 | 1.50 | 16, 12, 12 | 12, 12 | 9, 6 | 6, 3 |

**Table C-7**
Minimum Thickness of Thermally Tempered Glass (in.) to Survive Incident Overpressure from 500-lb TNT, Aspect Ratio, a/b = 1.0

| Plate Dimensions (in.) | | Standoff Distance (ft) | | | |
|---|---|---|---|---|---|
| a | b | 60 | 100 | 200 | 300 |
| 12 | 12 | 3/8, 1/4 | 1/4, 1/8 | 1/8, 1/8 | 1/8, 1/8 |
| 18 | 18 | 1/2, 3/8 | 1/4, 1/4 | 1/8, 1/8 | 1/8, 1/8 |
| 24 | 24 | 3/8, 3/8, 3/8 | 3/8, 1/4 | 1/4, 1/8 | 1/8, 1/8 |
| 30 | 30 | 1/2, 1/2, 3/8 | 3/8, 3/8 | 1/4, 1/8 | 1/4, 1/8 |
| 36 | 36 | 5/8, 1/2, 1/2 | 1/2, 3/8 | 1/4, 1/4 | 1/4, 1/8 |
| 42 | 42 | 5/8, 5/8, 5/8 | 1/2, 1/2 | 3/8, 1/4 | 1/4, 1/8 |
| 48 | 48 | 3/4, 5/8, 5/8 | 5/8, 1/2 | 3/8, 1/4 | 1/4, 1/4 |
| 54 | 54 | 3/4, 3/4, 3/4 | 5/8, 5/8 | 3/8, 1/4 | 1/4, 1/4 |
| 60 | 60 | 3/4, 5/8, 1/2, 1/2 | 3/4, 5/8 | 3/8, 3/8 | 3/8, 1/8 |

Cross-section is too thick for typical security frame, requires special consideration.

**Table C-8**
Minimum Thickness of Thermally Tempered Glass (mm) to Survive Incident Overpressure from 230-kg TNT, Aspect Ratio, a/b = 1.0

| Plate Dimensions (m) | | Standoff Distance (m) | | | |
|---|---|---|---|---|---|
| a | b | 20 | 40 | 70 | 100 |
| 0.30 | 0.30 | 9, 6 | 6, 3 | 3, 3 | 3, 3 |
| 0.45 | 0.45 | 12, 9 | 6, 6 | 3, 3 | 3, 3 |
| 0.60 | 0.60 | 9, 9, 9 | 9, 6 | 6, 3 | 3, 3 |
| 0.75 | 0.75 | 12, 12, 9 | 9, 9 | 6, 3 | 6, 3 |
| 0.90 | 0.90 | 16, 12, 12 | 12, 9 | 6, 6 | 6, 3 |
| 1.05 | 1.05 | 16, 16, 16 | 12, 12 | 9, 6 | 6, 3 |
| 1.20 | 1.20 | 19, 16, 16 | 16, 12 | 9, 6 | 6, 6 |
| 1.35 | 1.35 | 19, 19, 19 | 16, 16 | 9, 6 | 6, 6 |
| 1.50 | 1.50 | 19, 16, 12, 12 | 19, 16 | 9, 9 | 9, 3 |

Cross-section is too thick for typical security frame, requires special consideration.

**Table C-9**
Minimum Thickness of Thermally Tempered Glass (in.) to Survive Incident Overpressure from 1000-lb TNT, Aspect Ratio, a/b = 1.0

| Plate Dimensions (in.) | | Standoff Distance (ft) | | | |
|---|---|---|---|---|---|
| a | b | 60 | 100 | 200 | 300 |
| 12 | 12 | 3/8, 3/8 | 1/4, 1/8 | 1/8, 1/8 | 1/8, 1/8 |
| 18 | 18 | 5/8, 1/2 | 3/8, 1/4 | 1/4, 1/8 | 1/8, 1/8 |
| 24 | 24 | 3/4, 3/4 | 1/2, 3/8 | 1/4, 1/8 | 1/4, 1/8 |
| 30 | 30 | 5/8, 5/8, 5/8 | 1/2, 1/2 | 3/8, 1/8 | 1/4, 1/8 |
| 36 | 36 | 3/4, 3/4, 3/4 | 5/8, 1/2 | 3/8, 1/4 | 1/4, 1/8 |
| 42 | 42 | 5/8, 5/8, 5/8, 5/8 | 3/4, 5/8 | 3/8, 3/8 | 1/4, 1/4 |
| 48 | 48 | 3/4, 3/4, 5/8, 5/8 | 3/4, 3/4 | 3/8, 3/8 | 3/8, 1/8 |
| 54 | 54 | 5/8, 5/8, 5/8, 5/8, 5/8 | 5/8, 1/2, 1/2 | 1/2, 3/8 | 3/8, 1/4 |
| 60 | 60 | 3/4, 3/4, 3/4, 5/8, 5/8 | 5/8, 5/8, 5/8 | 1/2, 1/2 | 3/8, 1/4 |

Cross-section is too thick for typical security frame, requires special consideration.

**Table C-10**
Minimum Thickness of Thermally Tempered Glass (mm) to Survive Incident Overpressure from 460-kg TNT, Aspect Ratio, a/b = 1.0

| Plate Dimensions (m) | | Standoff Distance (m) | | | |
|---|---|---|---|---|---|
| a | b | 20 | 30 | 60 | 90 |
| 0.30 | 0.30 | 9, 9 | 6, 3 | 3, 3 | 3, 3 |
| 0.45 | 0.45 | 16, 12 | 9, 6 | 6, 3 | 3, 3 |
| 0.60 | 0.60 | 19, 19 | 12, 9 | 6, 3 | 6, 3 |
| 0.75 | 0.75 | 16, 16, 16 | 12, 12 | 9, 3 | 6, 3 |
| 0.90 | 0.90 | 19, 19, 19 | 16, 12 | 9, 6 | 6, 3 |
| 1.05 | 1.05 | 16, 16, 16, 16 | 19, 16 | 9, 9 | 6, 6 |
| 1.20 | 1.20 | 19, 19, 12, 12 | 19, 19 | 9, 9 | 9, 3 |
| 1.35 | 1.35 | 16, 16, 16, 16, 16 | 16, 12, 12 | 12, 9 | 9, 6 |
| 1.50 | 1.50 | 19, 19, 19, 16, 16 | 16, 16, 16 | 12, 12 | 9, 6 |

Cross-section is too thick for typical security frame, requires special consideration.

**Table C-11**
Minimum Thickness of Thermally Tempered Glass (in.) to Survive Incident Overpressure from 50-lb TNT, Aspect Ratio, a/b = 1.5

| Plate Dimensions (in.) | | Standoff Distance (ft) | | | |
|---|---|---|---|---|---|
| a | b | 60 | 100 | 200 | 300 |
| 18 | 12 | 1/4, 1/4 | 1/8, 1/8 | 1/8, 1/8 | 1/8, 1/8 |
| 27 | 18 | 1/4, 1/4 | 1/8, 1/8 | 1/8, 1/8 | 1/8, 1/8 |
| 36 | 24 | 3/8, 1/4 | 1/4, 1/8 | 1/8, 1/8 | 1/8, 1/8 |
| 45 | 30 | 3/8, 1/4 | 1/4, 1/8 | 1/8, 1/8 | 1/8, 1/8 |
| 54 | 36 | 3/8, 3/8 | 1/4, 1/4 | 1/8, 1/8 | 1/8, 1/8 |
| 63 | 42 | 1/2, 3/8 | 1/4, 1/4 | 1/4, 1/8 | 1/8, 1/8 |
| 72 | 48 | 1/2, 3/8 | 1/4, 1/4 | 1/4, 1/8 | 1/8, 1/8 |

**Table C-12**
Minimum Thickness of Thermally Tempered Glass (mm) to Survive Incident Overpressure from 23-kg TNT, Aspect Ratio, a/b = 1.5

| Plate Dimensions (m) | | Standoff Distance (m) | | | |
|---|---|---|---|---|---|
| a | b | 20 | 30 | 60 | 90 |
| 0.45 | 0.30 | 6, 6 | 3, 3 | 3, 3 | 3, 3 |
| 0.68 | 0.45 | 6, 6 | 3, 3 | 3, 3 | 3, 3 |
| 0.90 | 0.60 | 9, 6 | 6, 3 | 3, 3 | 3, 3 |
| 1.12 | 0.75 | 9, 6 | 6, 3 | 3, 3 | 3, 3 |
| 1.35 | 0.90 | 9, 9 | 6, 6 | 3, 3 | 3, 3 |
| 1.58 | 1.05 | 12, 9 | 6, 6 | 6, 3 | 3, 3 |
| 1.80 | 1.20 | 12, 9 | 6, 6 | 6, 3 | 3, 3 |

**Table C-13**
Minimum Thickness of Thermally Tempered Glass (in.) to Survive Incident Overpressure from 220-lb TNT, Aspect Ratio, a/b = 1.5

| Plate Dimensions (in.) | | Standoff Distance (ft) | | | |
|---|---|---|---|---|---|
| a | b | 60 | 100 | 200 | 300 |
| 18 | 12 | 1/4, 1/4 | 1/4, 1/8 | 1/8, 1/8 | 1/8, 1/8 |
| 27 | 18 | 3/8, 3/8 | 1/4, 1/4 | 1/8, 1/8 | 1/8, 1/8 |
| 36 | 24 | 1/2, 1/2 | 3/8, 1/4 | 1/4, 1/8 | 1/8, 1/8 |
| 45 | 30 | 5/8, 5/8 | 3/8, 3/8 | 1/4, 1/8 | 1/8, 1/8 |
| 54 | 36 | 3/4, 5/8 | 1/2, 3/8 | 1/4, 1/4 | 1/4, 1/8 |
| 63 | 42 | 3/4, 3/4 | 1/2, 1/2 | 1/4, 1/4 | 1/4, 1/8 |
| 72 | 48 | 5/8, 5/8, 5/8 | 5/8, 5/8 | 3/8, 1/4 | 1/4, 1/8 |

**Table C-14**
Minimum Thickness of Thermally Tempered Glass (mm) to Survive Incident Overpressure from 100-kg TNT, Aspect Ratio, a/b = 1.5

| Plate Dimensions (m) | | Standoff Distance (m) | | | |
|---|---|---|---|---|---|
| a | b | 20 | 30 | 60 | 90 |
| 0.45 | 0.30 | 6, 6 | 6, 3 | 3, 3 | 3, 3 |
| 0.68 | 0.45 | 9, 9 | 6, 6 | 3, 3 | 3, 3 |
| 0.90 | 0.60 | 12, 12 | 9, 6 | 6, 3 | 3, 3 |
| 1.12 | 0.75 | 16, 16 | 9, 9 | 6, 3 | 3, 3 |
| 1.35 | 0.90 | 19, 16 | 12, 9 | 6, 6 | 6, 3 |
| 1.58 | 1.05 | 19, 19 | 12, 12 | 6, 6 | 6, 3 |
| 1.80 | 1.20 | 16, 16, 16 | 16, 16 | 9, 6 | 6, 3 |

**Table C-15**
Minimum Thickness of Thermally Tempered Glass (in.) to Survive Incident Overpressure from 500-lb TNT, Aspect Ratio, a/b = 1.5

| Plate Dimensions (in.) | | Standoff Distance (ft) | | | |
|---|---|---|---|---|---|
| a | b | 60 | 100 | 200 | 300 |
| 18 | 12 | 3/8, 3/8 | 1/4, 1/4 | 1/8, 1/8 | 1/8, 1/8 |
| 27 | 18 | 1/2, 1/2 | 3/8, 1/4 | 1/4, 1/8 | 1/8, 1/8 |
| 36 | 24 | 3/4, 3/4 | 3/8, 3/8 | 1/4, 1/4 | 1/4, 1/8 |
| 45 | 30 | 5/8, 1/2, 1/2 | 1/2, 1/2 | 3/8, 1/4 | 1/4, 1/8 |
| 54 | 36 | 5/8, 5/8, 5/8 | 5/8, 5/8 | 3/8, 1/4 | 1/4, 1/8 |
| 63 | 42 | 3/4, 3/4, 3/4 | 5/8, 5/8 | 3/8, 3/8 | 1/4, 1/4 |
| 72 | 48 | 5/8, 5/8, 5/8, 5/8 | 3/4, 3/4 | 3/8, 3/8 | 1/4, 1/4 |

Cross-section is too thick for typical security frame, requires special consideration.

**Table C-16**
Minimum Thickness of Thermally Tempered Glass (mm) to Survive Incident Overpressure from 230-kg TNT, Aspect Ratio, a/b = 1.5

| Plate Dimensions (m) | | Standoff Distance (m) | | | |
|---|---|---|---|---|---|
| a | b | 20 | 30 | 60 | 90 |
| 0.45 | 0.30 | 9, 9 | 6, 6 | 3, 3 | 3, 3 |
| 0.68 | 0.45 | 12, 12 | 9, 6 | 6, 3 | 3, 3 |
| 0.90 | 0.60 | 19, 19 | 9, 9 | 6, 6 | 6, 3 |
| 1.12 | 0.75 | 16, 12, 12 | 12, 12 | 9, 6 | 6, 3 |
| 1.35 | 0.90 | 16, 16, 16 | 16, 16 | 9, 6 | 6, 3 |
| 1.58 | 1.05 | 19, 19, 19 | 16, 16 | 9, 9 | 6, 6 |
| 1.80 | 1.20 | 16, 16, 16, 16 | 19, 19 | 9, 9 | 6, 6 |

Cross-section is too thick for typical security frame, requires special consideration.

**Table C-17**
Minimum Thickness of Thermally Tempered Glass (in.) to Survive Incident Overpressure from 1000-lb TNT, Aspect Ratio, a/b = 1.5

| Plate Dimensions (in.) | | Standoff Distance (ft) | | | |
|---|---|---|---|---|---|
| a | b | 60 | 100 | 200 | 300 |
| 18 | 12 | 1/2, 1/2 | 3/8, 1/4 | 1/8, 1/8 | 1/8, 1/8 |
| 27 | 18 | 3/4, 3/4 | 3/8, 3/8 | 1/4, 1/4 | 1/4, 1/8 |
| 36 | 24 | 5/8, 5/8, 5/8 | 1/2, 1/2 | 3/8, 1/4 | 1/4, 1/8 |
| 45 | 30 | 3/4, 3/4, 3/4 | 5/8, 5/8 | 3/8, 1/4 | 1/4, 1/4 |
| 54 | 36 | 3/4, 3/4, 5/8, 5/8 | 3/4, 3/4 | 3/8, 3/8 | 3/8, 1/4 |
| 63 | 42 | 5/8, 5/8, 5/8, 5/8, 5/8 | 5/8, 1/2, 1/2 | 1/2, 3/8 | 3/8, 1/4 |
| 72 | 48 | 3/4, 3/4, 3/4, 5/8, 5/8 | 5/8, 5/8, 5/8 | 1/2, 1/2 | 3/8, 3/8 |

Cross-section is too thick for typical security frame, requires special consideration.

**Table C-18**
Minimum Thickness of Thermally Tempered Glass (mm) to Survive Incident Overpressure from 460-kg TNT, Aspect Ratio, a/b = 1.5

| Plate Dimensions (m) | | Standoff Distance (m) | | | |
|---|---|---|---|---|---|
| a | b | 20 | 30 | 60 | 90 |
| 0.45 | 0.30 | 12, 12 | 9, 6 | 3, 3 | 3, 3 |
| 0.68 | 0.45 | 19, 19 | 9, 9 | 6, 6 | 6, 3 |
| 0.90 | 0.60 | 16, 16, 16 | 12, 12 | 9, 6 | 6, 3 |
| 1.12 | 0.75 | 19, 19, 19 | 16, 16 | 9, 6 | 6, 6 |
| 1.35 | 0.90 | 19, 19, 16, 16 | 19, 19 | 9, 9 | 9, 6 |
| 1.58 | 1.05 | 16, 16, 16, 16, 16 | 16, 12, 12 | 12, 9 | 9, 6 |
| 1.80 | 1.20 | 19, 19, 19, 16, 16 | 16, 16, 16 | 12, 12 | 9, 9 |

Cross-section is too thick for typical security frame, requires special consideration.

**Table C-19**
Minimum Thickness of Thermally Tempered Glass (in.) to Survive Incident Overpressure from 50-lb TNT, Aspect Ratio, a/b = 2.0

| Plate Dimensions (in.) | | Standoff Distance (ft) | | | |
|---|---|---|---|---|---|
| a | b | 60 | 100 | 200 | 300 |
| 24 | 12 | 1/4, 1/8 | 1/8, 1/8 | 1/8, 1/8 | 1/8, 1/8 |
| 36 | 18 | 1/4, 1/4 | 1/4, 1/8 | 1/8, 1/8 | 1/8, 1/8 |
| 48 | 24 | 3/8, 1/4 | 1/4, 1/4 | 1/8, 1/8 | 1/8, 1/8 |
| 60 | 30 | 3/8, 3/8 | 1/4, 1/4 | 1/8, 1/8 | 1/8, 1/8 |
| 72 | 36 | 1/2, 3/8 | 3/8, 1/4 | 1/8, 1/8 | 1/8, 1/8 |
| 84 | 42 | 1/2, 1/2 | 3/8, 1/4 | 1/4, 1/8 | 1/8, 1/8 |

**Table C-20**
Minimum Thickness of Thermally Tempered Glass (mm) to Survive Incident Overpressure from 23-kg TNT, Aspect Ratio, a/b = 2.0

| Plate Dimensions (m) | | Standoff Distance (m) | | | |
|---|---|---|---|---|---|
| a | b | 20 | 30 | 60 | 90 |
| 0.60 | 0.30 | 6, 3 | 3, 3 | 3, 3 | 3, 3 |
| 0.90 | 0.45 | 6, 6 | 6, 3 | 3, 3 | 3, 3 |
| 1.20 | 0.60 | 9, 6 | 6, 6 | 3, 3 | 3, 3 |
| 1.50 | 0.75 | 9, 9 | 6, 6 | 3, 3 | 3, 3 |
| 1.80 | 0.90 | 12, 9 | 9, 6 | 3, 3 | 3, 3 |
| 2.10 | 1.05 | 12, 12 | 9, 6 | 6, 3 | 3, 3 |

**Table C-21**
Minimum Thickness of Thermally Tempered Glass (in.) to Survive Incident Overpressure from 220-lb TNT, Aspect Ratio, a/b = 2.0

| Plate Dimensions (in.) | | Standoff Distance (ft) | | | |
|---|---|---|---|---|---|
| a | b | 60 | 100 | 200 | 300 |
| 24 | 12 | 3/8, 1/4 | 1/4, 1/8 | 1/8, 1/8 | 1/8, 1/8 |
| 36 | 18 | 1/2, 3/8 | 3/8, 1/4 | 1/4, 1/8 | 1/8, 1/8 |
| 48 | 24 | 5/8, 1/2 | 3/8, 3/8 | 1/4, 1/8 | 1/8, 1/8 |
| 60 | 30 | 3/4, 5/8 | 1/2, 3/8 | 1/4, 1/4 | 1/4, 1/8 |
| 72 | 36 | 3/4, 3/4 | 1/2, 1/2 | 3/8, 1/4 | 1/4, 1/8 |
| 84 | 42 | 5/8, 5/8, 1/2 | 5/8, 5/8 | 3/8, 1/4 | 1/4, 1/8 |

**Table C-22**
Minimum Thickness of Thermally Tempered Glass (mm) to Survive Incident Overpressure from 100-kg TNT, Aspect Ratio, a/b = 2.0

| Plate Dimensions (m) | | Standoff Distance (m) | | | |
|---|---|---|---|---|---|
| a | b | 20 | 30 | 60 | 90 |
| 0.60 | 0.30 | 9, 6 | 6, 3 | 3, 3 | 3, 3 |
| 0.90 | 0.45 | 12, 9 | 9, 6 | 6, 3 | 3, 3 |
| 1.20 | 0.60 | 16, 12 | 9, 9 | 6, 3 | 3, 3 |
| 1.50 | 0.75 | 19, 16 | 12, 9 | 6, 6 | 6, 3 |
| 1.80 | 0.90 | 19, 19 | 12, 12 | 9, 6 | 6, 3 |
| 2.10 | 1.05 | 16, 16, 12 | 16, 16 | 9, 6 | 6, 3 |

**Table C-23**
Minimum Thickness of Thermally Tempered Glass (in.) to Survive Incident Overpressure from 500-lb TNT, Aspect Ratio, a/b = 2.0

| Plate Dimensions (in.) | | Standoff Distance (ft) | | | |
|---|---|---|---|---|---|
| a | b | 60 | 100 | 200 | 300 |
| 24 | 12 | 1/2, 3/8 | 1/4, 1/4 | 1/8, 1/8 | 1/8, 1/8 |
| 36 | 18 | 5/8, 1/2 | 3/8, 3/8 | 1/4, 1/8 | 1/4, 1/8 |
| 48 | 24 | 3/4, 3/4 | 1/2, 3/8 | 1/4, 1/4 | 1/4, 1/8 |
| 60 | 30 | 5/8, 5/8, 5/8 | 5/8, 1/2 | 3/8, 1/4 | 1/4, 1/4 |
| 72 | 36 | 3/4, 3/4, 3/4 | 5/8 ,5/8 | 3/8, 3/8 | 3/8, 1/4 |
| 84 | 42 | 5/8, 5/8, 5/8, 5/8 | 3/4, 5/8 | 1/2, 3/8 | 3/8, 1/4 |

Cross-section is too thick for typical security frame, requires special consideration.

**Table C-24**
Minimum Thickness of Thermally Tempered Glass (mm) to Survive Incident Overpressure from 230-kg TNT, Aspect Ratio, a/b = 2.0

| Plate Dimensions (m) | | Standoff Distance (m) | | | |
|---|---|---|---|---|---|
| a | b | 20 | 30 | 60 | 90 |
| 0.60 | 0.30 | 12, 9 | 6, 6 | 3, 3 | 3, 3 |
| 0.90 | 0.45 | 16, 12 | 9, 9 | 6, 3 | 6, 3 |
| 1.20 | 0.60 | 19, 19 | 12, 9 | 6, 6 | 6, 3 |
| 1.50 | 0.75 | 16, 16, 16 | 16, 12 | 9, 6 | 6. 6 |
| 1.80 | 0.90 | 19, 19, 19 | 16, 16 | 9, 9 | 9, 6 |
| 2.10 | 1.05 | 16, 16, 16, 16 | 19, 16 | 12, 9 | 9, 6 |

Cross-section is too thick for typical security frame, requires special consideration.

**Table C-25**
Minimum Thickness of Thermally Tempered Glass (in.) to Survive Incident Overpressure from 1000-lb TNT, Aspect Ratio, a/b = 2.0

| Plate Dimensions (in.) | | Standoff Distance (ft) | | | |
|---|---|---|---|---|---|
| a | b | 60 | 100 | 200 | 300 |
| 24 | 12 | 5/8, 1/2 | 3/8, 1/4 | 1/4, 1/8 | 1/8, 1/8 |
| 36 | 18 | 5/8, 1/2, 1/2 | 1/2, 3/8 | 1/4, 1/4 | 1/4, 1/8 |
| 48 | 24 | 3/4, 3/4, 5/8 | 5/8, 1/2 | 3/8, 1/4 | 1/4, 1/4 |
| 60 | 30 | 3/4, 5/8, 5/8, 5/8 | 3/4, 5/8 | 3/8, 3/8 | 3/8, 1/4 |
| 72 | 36 | 5/8, 5/8, 5/8, 5/8, 5/8 | 5/8, 1/2, 1/2 | 1/2, 3/8 | 3/8, 1/4 |
| 84 | 42 | 3/4, 3/4, 5/8, 5/8, 5/8 | 5/8, 5/8, 5/8 | 1/2, 1/2 | 3/8, 3/8 |

Cross-section is too thick for typical security frame, requires special consideration.

**Table C-26**
Minimum Thickness of Thermally Tempered Glass (mm) to Survive Incident Overpressure from 460-kg TNT, Aspect Ratio, a/b = 2.0

| Plate Dimensions (m) | | Standoff Distance (m) | | | |
|---|---|---|---|---|---|
| a | b | 20 | 30 | 60 | 90 |
| 0.60 | 0.30 | 16, 12 | 9, 6 | 6, 3 | 3, 3 |
| 0.90 | 0.45 | 16, 12, 12 | 12, 9 | 6, 6 | 6, 3 |
| 1.20 | 0.60 | 19, 19, 16 | 16, 12 | 9, 6 | 6, 6 |
| 1.50 | 0.75 | 19, 16, 16, 16 | 19, 16 | 9, 9 | 9, 6 |
| 1.80 | 0.90 | 16, 16, 16, 16, 16 | 16, 12, 12 | 12, 9 | 9, 6 |
| 2.10 | 1.05 | 19, 19, 16, 16, 16 | 16, 16, 16 | 12, 12 | 9, 9 |

Cross-section is too thick for typical security frame, requires special consideration.

**Table C-27**
Minimum Thickness of Thermally Tempered Glass (in.) to Survive Incident Overpressure from 50-lb TNT, Aspect Ratio, a/b = 3.0

| Plate Dimensions (in.) | | Standoff Distance (ft) | | | |
|---|---|---|---|---|---|
| a | b | 60 | 100 | 200 | 300 |
| 36 | 12 | 1/4, 1/8 | 1/8, 1/8 | 1/8, 1/8 | 1/8, 1/8 |
| 54 | 18 | 3/8, 1/4 | 1/4, 1/8 | 1/8, 1/8 | 1/8, 1/8 |
| 72 | 24 | 3/8, 3/8 | 1/4, 1/4 | 1/8, 1/8 | 1/8, 1/8 |
| 90 | 30 | 1/2, 3/8 | 3/8, 1/4 | 1/4, 1/8 | 1/8, 1/8 |

**Table C-28**
Minimum Thickness of Thermally Tempered Glass (mm) to Survive Incident Overpressure from 23-kg TNT, Aspect Ratio, a/b = 3.0

| Plate Dimensions (m) | | Standoff Distance (m) | | | |
|---|---|---|---|---|---|
| a | b | 20 | 30 | 60 | 90 |
| 0.90 | 0.30 | 6, 3 | 3, 3 | 3, 3 | 3, 3 |
| 1.35 | 0.45 | 9, 6 | 6, 3 | 3, 3 | 3, 3 |
| 1.80 | 0.60 | 9, 9 | 6, 6 | 3, 3 | 3, 3 |
| 2.25 | 0.75 | 12, 9 | 9, 6 | 6, 3 | 3, 3 |

**Table C-29**
Minimum Thickness of Thermally Tempered Glass (in.) to Survive Incident Overpressure from 220-lb TNT, Aspect Ratio, a/b = 3.0

| Plate Dimensions (in.) | | Standoff Distance (ft) | | | |
|---|---|---|---|---|---|
| a | b | 60 | 100 | 200 | 300 |
| 36 | 12 | 1/4, 1/4 | 1/4, 1/8 | 1/8, 1/8 | 1/8, 1/8 |
| 54 | 18 | 3/8, 3/8 | 3/8, 1/4 | 1/4, 1/8 | 1/8, 1/8 |
| 72 | 24 | 5/8, 1/2 | 3/8, 3/8 | 1/4, 1/4 | 1/4, 1/8 |
| 90 | 30 | 3/4, 5/8 | ½, 3/8 | 3/8, 1/4 | 1/4, 1/8 |

**Table C-30**
Minimum Thickness of Thermally Tempered Glass (mm) to Survive Incident Overpressure from 100-kg TNT, Aspect Ratio, a/b = 3.0

| Plate Dimensions (m) | | Standoff Distance (m) | | | |
|---|---|---|---|---|---|
| a | b | 20 | 30 | 60 | 90 |
| 0.90 | 0.30 | 6, 6 | 6, 3 | 3, 3 | 3, 3 |
| 1.35 | 0.45 | 9, 9 | 9, 6 | 6, 3 | 3, 3 |
| 1.80 | 0.60 | 16, 12 | 9, 9 | 6, 6 | 6, 3 |
| 2.25 | 0.75 | 19, 16 | 12, 9 | 9, 6 | 6, 3 |

**Table C-31**
Minimum Thickness of Thermally Tempered Glass (in.) to Survive Incident Overpressure from 500-lb TNT, Aspect Ratio, a/b = 3.0

| Plate Dimensions (in.) | | Standoff Distance (ft) | | | |
|---|---|---|---|---|---|
| a | b | 60 | 100 | 200 | 300 |
| 36 | 12 | 1/2, 3/8 | 1/4, 1/4 | 1/4, 1/8 | 1/8, 1/8 |
| 54 | 18 | 5/8, 5/8 | 3/8, 3/8 | 1/4, 1/4 | 1/4, 1/8 |
| 72 | 24 | 5/8, 1/2, 1/2 | 1/2, 1/2 | 3/8, 1/4 | 1/4, 1/4 |
| 90 | 30 | 3/4, 5/8, 5/8 | 5/8, 1/2 | 3/8, 3/8 | 1/4, 1/4 |

**Table C-32**
Minimum Thickness of Thermally Tempered Glass (mm) to Survive Incident Overpressure from 230-kg TNT, Aspect Ratio, a/b = 3.0

| Plate Dimensions (m) | | Standoff Distance (m) | | | |
|---|---|---|---|---|---|
| a | b | 20 | 30 | 60 | 90 |
| 0.90 | 0.30 | 12, 9 | 6, 6 | 6, 3 | 3, 3 |
| 1.35 | 0.45 | 16, 16 | 9, 9 | 6, 6 | 6, 3 |
| 1.80 | 0.60 | 16, 12, 12 | 12, 12 | 9, 6 | 6, 6 |
| 2.25 | 0.75 | 19, 16, 16 | 16, 12 | 9, 9 | 6, 6 |

**Table C-33**
Minimum Thickness of Thermally Tempered Glass (in.) to Survive Incident Overpressure from 1000-lb TNT, Aspect Ratio, a/b = 3.0

| Plate Dimensions | Standoff Distance (ft) |
|---|---|

| (in.) | | | | | |
|---|---|---|---|---|---|
| a | b | 60 | 100 | 200 | 300 |
| 36 | 12 | 5/8, 1/2 | 3/8, 1/4 | 1/4, 1/8 | 1/8, 1/8 |
| 54 | 18 | 5/8, 5/8, 1/2 | 1/2, 3/8 | 1/4, 1/4 | 1/4, 1/8 |
| 72 | 24 | 3/4, 3/4, 3/4 | 5/8, 5/8 | 3/8, 1/4 | 1/4, 1/4 |
| 90 | 30 | 3/4, 3/4, 5/8, 5/8 | 3/4, 3/4 | 1/2, 3/8 | 3/8, 1/4 |

Cross-section is too thick for typical security frame, requires special consideration.

**Table C-34**

Minimum Thickness of Thermally Tempered Glass (mm) to Survive Incident Overpressure from 460-kg TNT, Aspect Ratio, a/b = 3.0

| Plate Dimensions (m) | | Standoff Distance (m) | | | |
|---|---|---|---|---|---|
| a | b | 20 | 30 | 60 | 90 |
| 0.90 | 0.30 | 16, 12 | 9, 6 | 6, 3 | 3, 3 |
| 1.35 | 0.45 | 16, 16, 12 | 12, 9 | 6, 6 | 6, 3 |
| 1.80 | 0.60 | 19, 19, 19 | 16, 16 | 9, 6 | 6, 6 |
| 2.25 | 0.75 | 19, 19, 16, 16 | 19, 19 | 12, 9 | 9, 6 |

Cross-section is too thick for typical security frame, requires special consideration.

**Table C-35**
Minimum Thickness of Polycarbonate (in.) to Survive Incident Overpressure from 50-lb (23-kg) TNT, Aspect Ratio, a/b = 1.0

| Plate Dimensions, in. (m) | | Standoff Distance, ft | | | |
|---|---|---|---|---|---|
| a | b | 60 (20 m) | 100 (30 m) | 200 (60 m) | 300 (90 m) |
| 12 (0.30) | 12 (0.30) | 1/4 (6 mm) | 1/4 (6 mm) | 1/8 (3 mm) | 1/8 (3 mm) |
| 18 (0.45) | 18 (0.45) | 3/8 (9 mm) | 1/4 (6 mm) | 1/8 (3 mm) | 1/8 (3 mm) |
| 24 (0.60) | 24 (0.60) | 3/8 (9 mm) | 1/4 (6 mm) | 1/4 (6 mm) | 1/4 (6 mm) |
| 30 (0.75) | 30 (0.75) | 1/2 (12 mm) | 3/8 (9 mm) | 1/4 (6 mm) | 1/4 (6 mm) |
| 36 (0.90) | 36 (0.90) | 1/2 (12 mm) | 3/8 (9 mm) | 1/4 (6 mm) | 1/4 (6 mm) |
| 42 (1.05) | 42 (1.05) | 5/8 (16 mm) | 3/8 (9 mm) | 1/4 (6 mm) | 1/4 (6 mm) |
| 48 (1.20) | 48 (1.20) | 5/8 (16 mm) | 1/2 (12 mm) | 3/8 (9 mm) | 1/4 (6 mm) |
| 54 (1.35) | 54 (1.35) | 5/8 (16 mm) | 1/2 (12 mm) | 3/8 (9 mm) | 3/8 (9 mm) |
| 60 (1.50) | 60 (1.50) | 3/4 (19 mm) | 1/2 (12 mm) | 3/8 (9 mm) | 3/8 (9 mm) |

**Table C-36**
Minimum Thickness of Polycarbonate (in.) to Survive Incident Overpressure from 220-lb (100-kg) TNT, Aspect Ratio, a/b = 1.0

| Plate Dimensions, in. (m) | | Standoff Distance, ft | | | |
|---|---|---|---|---|---|
| a | b | 60 (20 m) | 100 (30 m) | 200 (60 m) | 300 (90 m) |
| 12 (0.30) | 12 (0.30) | 3/8 (9 mm) | 1/4 (6 mm) | 1/8 (3 mm) | 1/8 (3 mm) |
| 18 (0.45) | 18 (0.45) | 5/8 (16 mm) | 3/8 (9 mm) | 1/4 (6 mm) | 1/4 (6 mm) |
| 24 (0.60) | 24 (0.60) | 3/4 (19 mm) | 1/2 (12 mm) | 1/4 (6 mm) | 1/4 (6 mm) |
| 30 (0.75) | 30 (0.75) | 7/8 (22 mm) | 1/2 (12 mm) | 3/8 (9 mm) | 1/4 (6 mm) |
| 36 (0.90) | 36 (0.90) | 1 (25 mm) | 5/8 (16 mm) | 3/8 (9 mm) | 3/8 (9 mm) |
| 42 (1.05) | 42 (1.05) | 1 (25 mm) | 5/8 (16 mm) | 3/8 (9 mm) | 3/8 (9 mm) |
| 48 (1.20) | 48 (1.20) | 1 1/8 (29 mm) | 3/4 (19 mm) | 1/2 (12 mm) | 3/8 (9 mm) |
| 54 (1.35) | 54 (1.35) | 1 1/4 (32 mm) | 7/8 (22 mm) | 1/2 (12 mm) | 3/8 (9 mm) |
| 60 (1.50) | 60 (1.50) | 1 3/8 (35 mm) | 7/8 (22 mm) | 1/2 (12 mm) | 3/8 (9 mm) |

**Table C-37**
Minimum Thickness of Polycarbonate (in.) to Survive Incident Overpressure from 500-lb (230-kg) TNT, Aspect Ratio, a/b = 1.0

| Plate Dimensions, in. (m) | | Standoff Distance, ft | | | |
|---|---|---|---|---|---|
| a | b | 60 (20 m) | 100 (30 m) | 200 (60 m) | 300 (90 m) |
| 12 (0.30) | 12 (0.30) | 5/8 (16 mm) | 3/8 (9 mm) | 1/4 (6 mm) | 1/8 (3 mm) |
| 18 (0.45) | 18 (0.45) | 3/4 (19 mm) | 1/2 (12 mm) | 1/4 (6 mm) | 1/4 (6 mm) |
| 24 (0.60) | 24 (0.60) | 1 (25 mm) | 5/8 (16 mm) | 3/8 (9 mm) | 1/4 (6 mm) |
| 30 (0.75) | 30 (0.75) | 1 1/8 (28 mm) | 3/4 (19 mm) | 3/8 (9 mm) | 3/8 (9 mm) |
| 36 (0.90) | 36 (0.90) | 1 3/8 (35 mm) | 7/8 (22 mm) | 1/2 (12 mm) | 3/8 (9 mm) |
| 42 (1.05) | 42 (1.05) | 1 1/2 (38 mm) | 7/8 (22 mm) | 1/2 (12 mm) | 3/8 (9 mm) |
| 48 (1.20) | 48 (1.20) | 1 5/8 (41 mm) | 1 (25 mm) | 5/8 (16 mm) | 1/2 (12 mm) |
| 54 (1.35) | 54 (1.35) | 1 3/4 (44 mm) | 1 1/8 (28 mm) | 5/8 (16 mm) | 1/2 (12 mm) |
| 60 (1.50) | 60 (1.50) | 1 7/8 (48 mm) | 1 1/8 (28 mm) | 3/4 (19 mm) | 1/2 (12 mm) |

**Table C-38**
Minimum Thickness of Polycarbonate (in.) to Survive Incident Overpressure from 1000-lb (460-kg) TNT, Aspect Ratio, a/b = 1.0

| Plate Dimensions, in. (m) | | Standoff Distance, ft | | | |
|---|---|---|---|---|---|
| a | b | 60 (20 m) | 100 (30 m) | 200 (60 m) | 300 (90 m) |
| 12 (0.30) | 12 (0.30) | 7/8 (22 mm) | 1/2 (12 mm) | 1/4 (6 mm) | 1/4 (6 mm) |
| 18 (0.45) | 18 (0.45) | 1 1/4 (32 mm) | 5/8 (16 mm) | 3/8 (9 mm) | 1/4 (6 mm) |
| 24 (0.60) | 24 (0.60) | 1 1/2 (38 mm) | 3/4 (19 mm) | 3/8 (9 mm) | 3/8 (9 mm) |
| 30 (0.75) | 30 (0.75) | 1 3/4 (44 mm) | 7/8 (22 mm) | 1/2 (12 mm) | 3/8 (9 mm) |
| 36 (0.90) | 36 (0.90) | 2 (51 mm) | 1 (25 mm) | 5/8 (16 mm) | 3/8 (9 mm) |
| 42 (1.05) | 42 (1.05) | 2 1/8 (54 mm) | 1 1/8 (28 mm) | 5/8 (16 mm) | 1/2 (12 mm) |
| 48 (1.20) | 48 (1.20) | 2 1/4 (57 mm) | 1 3/8 (35 mm) | 3/4 (19 mm) | 1/2 (12 mm) |
| 54 (1.35) | 54 (1.35) | 2 3/8 (60 mm) | 1 3/8 (35 mm) | 3/4 (19 mm) | 5/8 (16 mm) |
| 60 (1.50) | 60 (1.50) | 2 5/8 (64 mm) | 1 1/2 (38 mm) | 7/8 (22 mm) | 5/8 (16 mm) |

Cross-section is too thick for typical security frame, requires special consideration.

**Table C-39**
Minimum Thickness of Polycarbonate (in.) to Survive Incident Overpressure from 50-lb (23-kg) TNT, Aspect Ratio, a/b = 1.5

| Plate Dimensions, in. (m) | | Standoff Distance, ft | | | |
|---|---|---|---|---|---|
| a | b | 60 (20 m) | 100 (30 m) | 200 (60 m) | 300 (90 m) |
| 18 (0.45) | 12 (0.30) | 1/4 (6 mm) | 1/4 (6 mm) | 1/8 (3 mm) | 1/8 (3 mm) |
| 27 (0.68) | 18 (0.45) | 3/8 (9 mm) | 1/4 (6 mm) | 1/4 (6 mm) | 1/8 (3 mm) |
| 36 (0.90) | 24 (0.60) | 1/2 (12 mm) | 3/8 (9 mm) | 1/4 (6 mm) | 1/8 (3 mm) |
| 45 (1.12) | 30 (0.75) | 1/2 (12 mm) | 3/8 (9 mm) | 1/4 (6 mm) | 1/8 (3 mm) |
| 54 (1.35) | 36 (0.90) | 5/8 (16 mm) | 1/2 (12 mm) | 3/8 (9 mm) | 1/4 (6 mm) |
| 63 (1.58) | 42 (1.05) | 5/8 (16 mm) | 1/2 (12 mm) | 3/8 (9 mm) | 1/4 (6 mm) |
| 72 (2.25) | 48 (1.50) | 3/4 (19 mm) | 1/2 (12 mm) | 3/8 (9 mm) | 3/8 (6 mm) |

**Table C-40**
Minimum Thickness of Polycarbonate (in.) to Survive Incident Overpressure from 220-lb (100-kg) TNT, Aspect Ratio, a/b = 1.5

| Plate Dimensions, in. (m) | | Standoff Distance, ft | | | |
|---|---|---|---|---|---|
| a | b | 60 (20 m) | 100 (30 m) | 200 (60 m) | 300 (90 m) |
| 18 (0.45) | 12 (0.30) | 1/2 (12 mm) | 3/8 (9 mm) | 1/4 (6 mm) | 1/8 (3 mm) |
| 27 (0.68) | 18 (0.45) | 5/8 (16 mm) | 3/8 (9 mm) | 1/4 (6 mm) | 1/4 (6 mm) |
| 36 (0.90) | 24 (0.60) | 3/4 (19 mm) | 1/2 (12 mm) | 3/8 (9 mm) | 1/4 (6 mm) |
| 45 (1.12) | 30 (0.75) | 7/8 (22 mm) | 5/8 (16 mm) | 3/8 (9 mm) | 3/8 (9 mm) |
| 54 (1.35) | 36 (0.90) | 1 (25 mm) | 5/8 (16 mm) | 1/2 (12 mm) | 3/8 (9 mm) |
| 63 (1.58) | 42 (1.05) | 1 1/8 (28 mm) | 3/4 (19 mm) | 1/2 (12 mm) | 3/8 (9 mm) |
| 72 (2.25) | 48 (1.50) | 1 1/4 (32 mm) | 7/8 (22 mm) | 1/2 (12 mm) | 1/2 (12 mm) |

**Table C-41**
Minimum Thickness of Polycarbonate (in.) to Survive Incident Overpressure from 500-lb (230-kg) TNT, Aspect Ratio, a/b = 1.5

| Plate Dimensions, in. (m) | | Standoff Distance, ft | | | |
|---|---|---|---|---|---|
| a | b | 60 (20 m) | 100 (30 m) | 200 (60 m) | 300 (90 m) |
| 18 (0.45) | 12 (0.30) | 3/4 (19 mm) | 3/8 (9 mm) | 1/4 (6 mm) | 1/4 (6 mm) |
| 27 (0.68) | 18 (0.45) | 1 (25 mm) | 1/2 (12 mm) | 3/8 (9 mm) | 1/4 (6 mm) |
| 36 (0.90) | 24 (0.60) | 1 1/4 (32 mm) | 5/8 (16 mm) | 3/8 (9 mm) | 3/8 (9 mm) |
| 45 (1.12) | 30 (0.75) | 1 3/8 (35 mm) | 7/8 (22 mm) | 1/2 (12 mm) | 3/8 (9 mm) |
| 54 (1.35) | 36 (0.90) | 1 1/2 (38 mm) | 7/8 (22 mm) | 1/2 (12 mm) | 3/8 (9 mm) |
| 63 (1.58) | 42 (1.05) | 1 5/8 (41 mm) | 1 (25 mm) | 5/8 (16 mm) | 1/2 (12 mm) |
| 72 (2.25) | 48 (1.50) | 1 3/4 (44 mm) | 1 1/8 (28 mm) | 3/4 (19 mm) | 1/2 (12 mm) |

**Table C-42**
Minimum Thickness of Polycarbonate (in.) to Survive Incident Overpressure from 1000-lb (460-kg) TNT, Aspect Ratio, a/b = 1.5

| Plate Dimensions, in. (m) | | Standoff Distance, ft | | | |
|---|---|---|---|---|---|
| a | b | 60 (20 m) | 100 (30 m) | 200 (60 m) | 300 (90 m) |
| 18 (0.45) | 12 (0.30) | 1 1/8 (28 mm) | 1/2 (12 mm) | 1/4 (6 mm) | 1/4 (6 mm) |
| 27 (0.68) | 18 (0.45) | 1 1/2 (38 mm) | 5/8 (16 mm) | 3/8 (9 mm) | 1/4 (6 mm) |
| 36 (0.90) | 24 (0.60) | 1 7/8 (48 mm) | 7/8 (22 mm) | 1/2 (12 mm) | 3/8 (9 mm) |
| 45 (1.12) | 30 (0.75) | 2 1/4 (57 mm) | 1 (25 mm) | 5/8 (16 mm) | 1/2 (12 mm) |
| 54 (1.35) | 36 (0.90) | 2 5/8 (67 mm) | 1 1/4 (32 mm) | 3/4 (19 mm) | 1/2 (12 mm) |
| 63 (1.58) | 42 (1.05) | 2 7/8 (73 mm) | 1 3/8 (35 mm) | 3/4 (19 mm) | 5/8 (16 mm) |
| 72 (2.25) | 48 (1.50) | 3 1/8 (80 mm) | 1 1/2 (38 mm) | 3/4 (19 mm) | 5/8 (16 mm) |

Cross-section is too thick for typical security frame, requires special consideration.

**Table C-43**
Minimum Thickness of Polycarbonate (in.) to Survive Incident Overpressure from 50-lb (23-kg) TNT, Aspect Ratio, a/b = 2.0

| Plate Dimensions, in. (m) | | Standoff Distance, ft | | | |
|---|---|---|---|---|---|
| a | b | 60 (20 m) | 100 (30 m) | 200 (60 m) | 300 (90 m) |
| 24 (0.60) | 12 (0.30) | 3/8 (9 mm) | 1/4 (6 mm) | 1/8 (3 mm) | 1/8 (3 mm) |
| 36 (0.90) | 18 (0.45) | 3/8 (9 mm) | 1/4 (6 mm) | 1/4 (6 mm) | 1/4 (6 mm) |
| 48 (1.20) | 24 (0.60) | 1/2 (12 mm) | 3/8 (9 mm) | 1/4 (6 mm) | 1/4 (6 mm) |
| 60 (1.50) | 30 (0.75) | 5/8 (16 mm) | 3/8 (9 mm) | 3/8 (9 mm) | 1/4 (6 mm) |
| 72 (1.80) | 36 (0.90) | 5/8 (16 mm) | 1/2 (12 mm) | 3/8 (9 mm) | 3/8 (9 mm) |
| 84 (2.10) | 42 (1.05) | 5/8 (16 mm) | 1/2 (12 mm) | 3/8 (9 mm) | 3/8 (9 mm) |

**Table C-44**
Minimum Thickness of Polycarbonate (in.) to Survive Incident Overpressure from 220-lb (100-kg) TNT, Aspect Ratio, a/b = 2.0

| Plate Dimensions, in. (m) | | Standoff Distance, ft | | | |
|---|---|---|---|---|---|
| a | b | 60 (20 m) | 100 (30 m) | 200 (60 m) | 300 (90 m) |
| 24 (0.60) | 12 (0.30) | 5/8 (16 mm) | 3/8 (9 mm) | 1/4 (6 mm) | 1/4 (6 mm) |
| 36 (0.90) | 18 (0.45) | 3/4 (19 mm) | 1/2 12 mm) | 1/4 (6 mm) | 1/4 (6 mm) |
| 48 (1.20) | 24 (0.60) | 7/8 (22 mm) | 1/2 (12 mm) | 3/8 (9 mm) | 1/4 (6 mm) |
| 60 (1.50) | 30 (0.75) | 1 (25 mm) | 5/8 (16 mm) | 3/8 (9 mm) | 3/8 (9 mm) |
| 72 (1.80) | 36 (0.90) | 1 1/8 (28 mm) | 3/4 (19 mm) | 1/2 (12 mm) | 3/8 (9 mm) |
| 84 (2.10) | 42 (1.05) | 1 1/8 (31 mm) | 3/4 (19 mm) | 1/2 (12 mm) | 1/2 (12 mm) |

**Table C-45**
Minimum Thickness of Polycarbonate (in.) to Survive Incident Overpressure from 500-lb (230-kg) TNT, Aspect Ratio, a/b = 2.0

| Plate Dimensions, in. (m) | | Standoff Distance, ft | | | |
|---|---|---|---|---|---|
| a | b | 60 (20 m) | 100 (30 m) | 200 (60 m) | 300 (90 m) |
| 24 (0.60) | 12 (0.30) | 7/8 (22 mm) | 3/8 (9 mm) | 1/4 (6 mm) | 1/4 (6 mm) |
| 36 (0.90) | 18 (0.45) | 1 1/4 (32 mm) | 5/8 (16 mm) | 3/8 (9 mm) | 1/4 (6 mm) |
| 48 (1.20) | 24 (0.60) | 1 1/2 (38 mm) | 3/4 (19 mm) | 1/2 (12 mm) | 3/8 (9 mm) |
| 60 (1.50) | 30 (0.75) | 1 3/4 (44 mm) | 7/8 (22 mm) | 1/2 (12 mm) | 3/8 (9 mm) |
| 72 (1.80) | 36 (0.90) | 1 7/8 (48 mm) | 1 (25 mm) | 5/8 (16 mm) | 1/2 (12 mm) |
| 84 (2.10) | 42 (1.05) | 2 1/8 (54 mm) | 1 (25 mm) | 5/8 (16 mm) | 1/2 (12 mm) |

**Table C-46**
Minimum Thickness of Polycarbonate (in.) to Survive Incident Overpressure from 1000-lb (460-kg) TNT, Aspect Ratio, a/b = 2.0

| Plate Dimensions, in. (m) | | Standoff Distance, ft | | | |
|---|---|---|---|---|---|
| a | b | 60 (20 m) | 100 (30 m) | 200 (60 m) | 300 (90 m) |
| 24 (0.60) | 12 (0.30) | 1 1/4 (32 mm) | 5/8 (16 mm) | 1/4 (6 mm) | 1/4 (6 mm) |
| 36 (0.90) | 18 (0.45) | 1 5/8 (41 mm) | 7/8 (22 mm) | 3/8 (9 mm) | 3/8 (9 mm) |
| 48 (1.20) | 24 (0.60) | 2 1/8 (54 mm) | 1 (25 mm) | 1/2 (12 mm) | 3/8 (9 mm) |
| 60 (1.50) | 30 (0.75) | 2 1/2 (64 mm) | 1 1/8 (28 mm) | 5/8 (16 mm) | 1/2 (12 mm) |
| 72 (1.80) | 36 (0.90) | 2 7/8 (73 mm) | 1 1/4 (32 mm) | 3/4 (19 mm) | 1/2 (12 mm) |
| 84 (2.10) | 42 (1.05) | 3 1/4 (83 mm) | 1 3/8 (35 mm) | 3/4 (19 mm) | 5/8 (16 mm) |

Cross-section is too thick for typical security frame, requires special consideration.

**Table C-47**
Minimum Thickness of Polycarbonate (in.) to Survive Incident Overpressure from 50-lb (23-kg) TNT, Aspect Ratio, a/b = 3.0

| Plate Dimensions, in. (m) | | Standoff Distance, ft | | | |
|---|---|---|---|---|---|
| a | b | 60 (20 m) | 100 (30 m) | 200 (60 m) | 300 (90 m) |
| 36 (0.90) | 12 (0.30) | 3/8 (9 mm) | 1/4 (6 mm) | 1/4 (6 mm) | 1/8 (3 mm) |
| 54 (1.35) | 18 (0.45) | 3/8 (9 mm) | 3/8 (9 mm) | 1/4 (6 mm) | 1/4 (6 mm) |
| 72 (1.80) | 24 (0.60) | 1/2 (12 mm) | 1/2 (12 mm) | 3/8 (9 mm) | 1/4 (6 mm) |
| 90 (2.25) | 30 (0.75) | 1/2 (12 mm) | 1/2 (12 mm) | 3/8 (9 mm) | 3/8 (9 mm) |

**Table C-48**
Minimum Thickness of Polycarbonate (in.) to Survive Incident Overpressure from 220-lb (100-kg) TNT, Aspect Ratio, a/b = 3.0

| Plate Dimensions, in. (m) | | Standoff Distance, ft | | | |
|---|---|---|---|---|---|
| a | b | 60 (20 m) | 100 (30 m) | 200 (60 m) | 300 (90 m) |
| 36 (0.90) | 12 (0.30) | 5/8 (16 mm) | 3/8 (9 mm) | 1/4 (6 mm) | 1/4 (6 mm) |
| 54 (1.35) | 18 (0.45) | 7/8 (22 mm) | 1/2 (12 mm) | 3/8 (9 mm) | 1/4 (6 mm) |
| 72 (1.80) | 24 (0.60) | 1 1/8 (28 mm) | 1/2 (12 mm) | 3/8 (9 mm) | 3/8 (9 mm) |
| 90 (2.25) | 30 (0.75) | 1 1/4 (32 mm) | 5/8 (16 mm) | 1/2 (12 mm) | 3/8 (9 mm) |

**Table C-49**
Minimum Thickness of Polycarbonate (in.) to Survive Incident Overpressure from 500-lb (230-kg) TNT, Aspect Ratio, a/b = 3.0

| Plate Dimensions, in. (m) | | Standoff Distance, ft | | | |
|---|---|---|---|---|---|
| a | b | 60 (20 m) | 100 (30 m) | 200 (60 m) | 300 (90 m) |
| 36 (0.90) | 12 (0.30) | 1 (25 mm) | 1/2 (12 mm) | 3/8 (9 mm) | 1/4 (6 mm) |
| 54 (1.35) | 18 (0.45) | 1 3/8 (35 mm) | 3/4 (19 mm) | 3/8 (9 mm) | 1/4 (6 mm) |
| 72 (1.80) | 24 (0.60) | 1 5/8 (41 mm) | 7/8 (22 mm) | 1/2 (12 mm) | 3/8 (9 mm) |
| 90 (2.25) | 30 (0.75) | 1 7/8 (48 mm) | 1 (25 mm) | 1/2 (12 mm) | 1/2 (12 mm) |

**Table C-50**
Minimum Thickness of Polycarbonate (in.) to Survive Incident Overpressure from 1000-lb (460-kg) TNT, Aspect Ratio, a/b = 3.0

| Plate Dimensions, in. (m) | | Standoff Distance, ft | | | |
|---|---|---|---|---|---|
| a | b | 60 (20 m) | 100 (30 m) | 200 (60 m) | 300 (90 m) |
| 36 (0.90) | 12 (0.30) | 1 1/4 (32 mm) | 3/4 (19 mm) | 3/8 (9 mm) | 1/4 (6 mm) |
| 54 (1.35) | 18 (0.45) | 1 7/8 (48 mm) | 1 (25 mm) | 3/8 (9 mm) | 3/8 (9 mm) |
| 72 (1.80) | 24 (0.60) | 2 1/4 (57 mm) | 1 1/4 (32 mm) | 1/2 (12 mm) | 3/8 (9 mm) |
| 90 (2.25) | 30 (0.75) | 2 3/4 (70 mm) | 1 1/2 (38 mm) | 5/8 (16 mm) | 1/2 (12 mm) |

Cross-section is too thick for typical security frame, requires special consideration.

C.15 Plate Data Preparation Procedure. This procedure helps to prepare data worksheets for selecting a glazing system subjected to blast loading. It provides a set of structures that step an analyst through plate data preparation. A process chart and description of the procedure are shown in Figure C-18.

C.15.1 Required Information. The following information is required for plate data preparation:

a) Worksheets (see Appendix B):
   1) Safevue Analysis (SA)

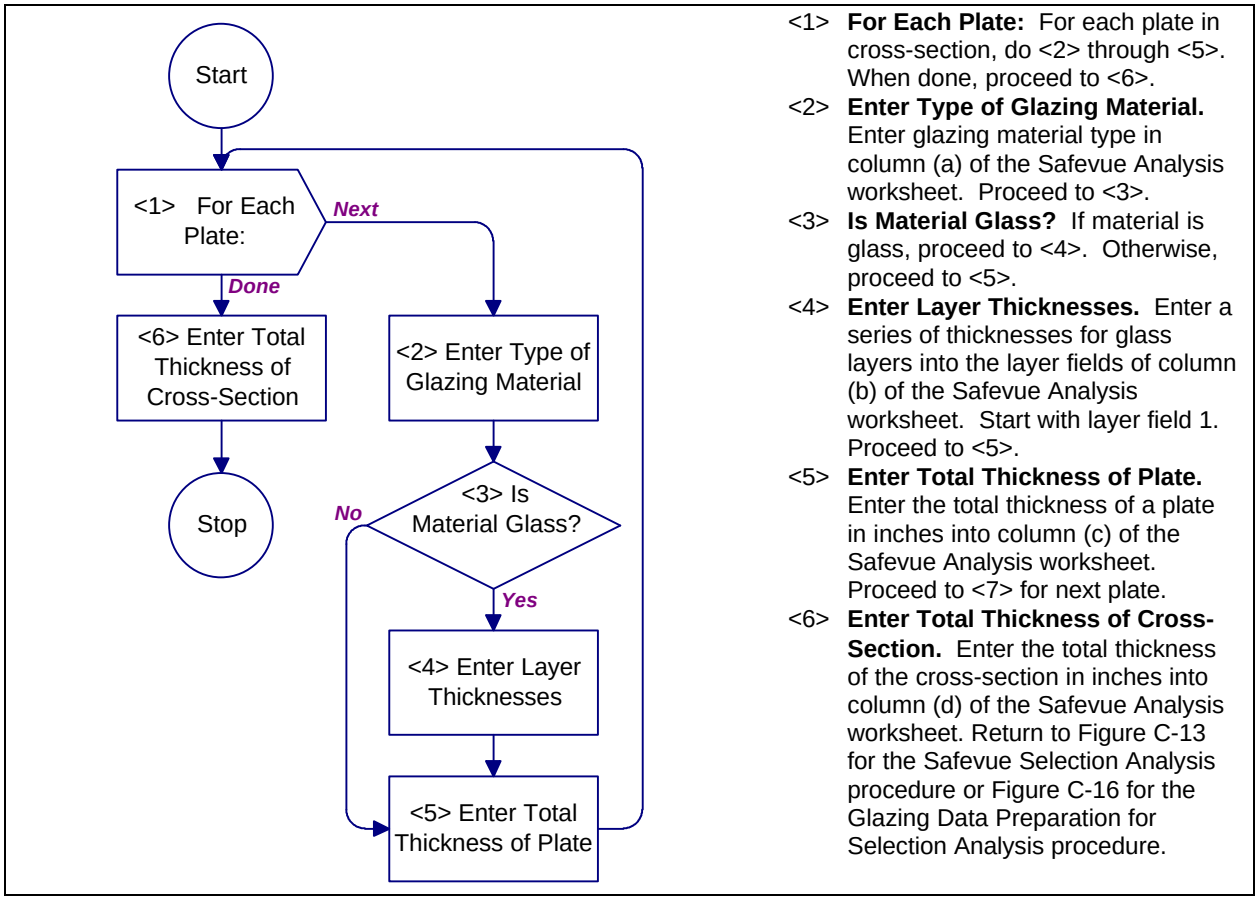


**Figure C-18**
Process Chart and Description: Plate Data Preparation Procedure

C.16 Results Analysis Procedure. This procedure contains structures for analyzing the results of a Safevue selection application analysis. This procedure will assist in modifying cross-section plates and layers to resist blast attacks. A process chart and description of the procedure are shown in Figure C-19.

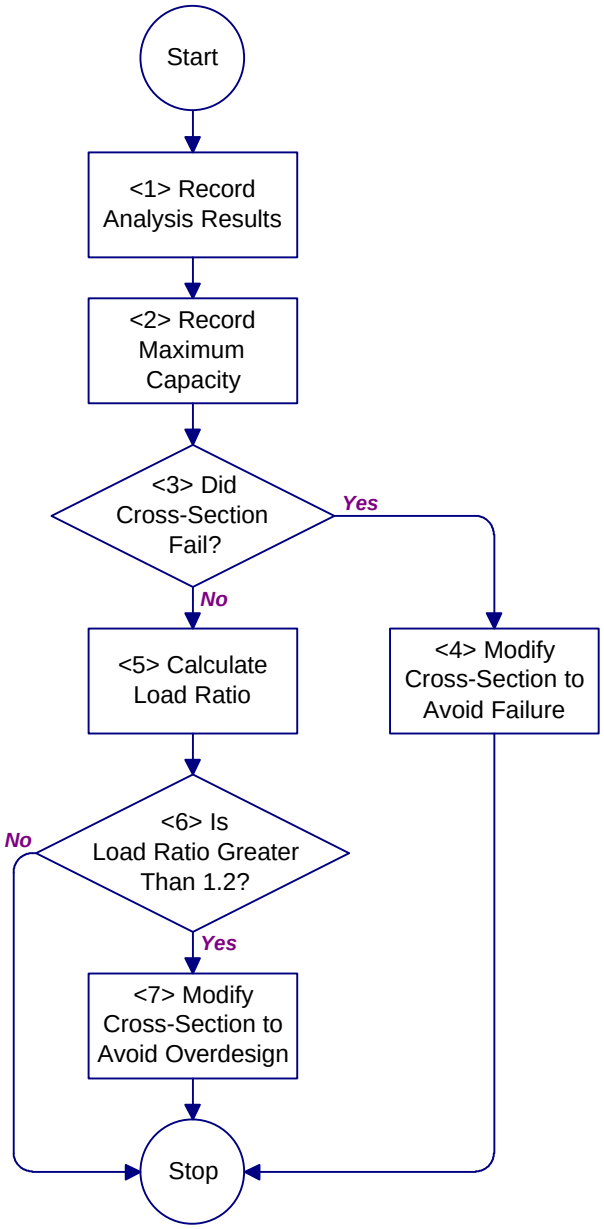


<1> **Record Analysis Results.** Record the dynamic load shown at the top of the screen in column (e) of the Safevue Analysis worksheet (see Appendix B for all worksheets). In column (f) of the worksheet, mark whether the cross-section passed or failed. For a cross-section that passes, enter the minimum bite in column (g). Press the 'C' and "Enter" keys to continue. Proceed to <2>.

<2> **Record Maximum Capacity.** When Safevue displays the Safevue Control Menu, select G, "Find MAXIMUM CAPACITY" and record the dynamic load shown at the top of the screen in column (h) of the Safevue Analysis worksheet. Press the 'C' and "Enter" keys to continue. Proceed to <3>.

<3> **Did Cross-Section Fail?** If the cross-section failed, proceed to <4> to modify plates and layers. For a cross-section that passed, proceed to <5>.

<4> **Modify Cross-Section to Avoid Failure.** Refer to paragraph C.16.2, Modifying a Cross-Section to Avoid Failure, for guidance on increasing the cross-section thickness. Return to Figure C-13.

<5> **Calculate Load Ratio.** From the Safevue Analysis worksheet, divide the maximum capacity in column (h) by the dynamic load in column (f) and enter the result in the column (i). Proceed to <6>.

<6> **Is Load Ratio Greater Than 1.2?** If the load ratio in column (i) of the Safevue Analysis worksheet is greater than 1.2, proceed to <7> to modify the cross-section's layers and plates. Otherwise, return to Figure C-13.

<7> **Modify Cross-Section to Avoid Overdesign.** Refer to paragraph C.16.3, Modifying a Cross-Section to Avoid Overdesign, for guidance on decreasing the thickness of a cross-section. Return to Figure C-13.

**Figure C-19**
Process Chart and Description: Results Analysis Procedure

C.16.1 Required Information. The following information is required for results analysis:

a) Dynamic load. This information is created by Figure C-7.
b) Worksheets (see Appendix B):
   1) Safevue Analysis

C.16.2 Modifying a Cross-Section to Avoid Failure. While it is not possible to provide a systematic approach to modifying a cross-section when Safevue predicts failure, here are some general guidelines to aid in producing a revised cross-section:

a) The relationship between load capacity and layer thickness is nonlinear. Doubling a cross-section thickness will more than double the load capacity.
b) Larger thicknesses of glass have premium prices. Avoid selecting glass layer thicknesses over 1/2 inch (12 mm), unless it is to avert additional laminations.
c) Increasing the number of laminations can reduce the velocity of glass fragments. However, laminations are expensive. Carefully weigh the benefits of reduced fragment velocity against the added cost.
d) When increasing the thickness of a layer, attempt to maintain uniform thicknesses among the layers in a plate while minimizing the overall thickness of the plate. For example, two 3/8-inch (9-mm) layers are preferred to a plate with 1/2-inch (12-mm) and 1/4-inch (6-mm) layers, and a plate consisting of 5/8-inch (16-mm), 1/2-inch (12-mm), and 1/2-inch (12-mm) layers is preferred to one with 3/4-inch (19-mm), 1/2-inch (12-mm), and 1/4-inch (6-mm) layers. However, a plate consisting of 5/8-inch (16-mm) and 1/4-inch (6-mm) layers is preferred to one with two 1/2-inch (12-mm) layers because of the smaller overall thickness.
e) Larger thicknesses of materials are not generally available. Avoid selecting glass layer thicknesses over 3/4 inch (19 mm).

C.16.3 Modifying a Cross-Section to Avoid Overdesign. While it is not possible to provide a systematic approach to modifying a cross-section when Safevue predicts overdesign, there are some general guidelines to aid an analyst in producing a revised cross-section:

a) The relationship between load capacity and layer thickness is nonlinear. Halving a cross-section thickness will more than halve the load capacity.
b) Larger thicknesses of materials are not generally available. Avoid selecting glass layer thicknesses over 3/4 inch (19 mm).
c) When decreasing the thickness of a layer, attempt to maintain uniform thicknesses among the layers in a plate while minimizing the overall thickness of the plate. For example, two 3/8-inch (9-mm) layers are preferred to a plate with 1/2-inch (12-mm) and 1/4-inch (6-mm) layers, and a plate consisting of 5/8-inch (16-mm), 1/2-inch (12-mm), and 1/2-inch (12-mm) layers is preferred to one with 3/4-inch (19-mm), 1/2-inch (12-mm), and 1/4-inch (6-mm) layers. However, a plate consisting of 5/8-inch (16-mm) and 1/4-inch (6-mm) layers is preferred to one with two 1/2-inch (12-mm) layers.

# APPENDIX D
# RISK ANALYSIS

## SECTION D-1: PLANNING

D-1.1 Introduction. Material in this section is taken from Army TM 5-583-1. Analysts familiar with this document may prefer to use it to develop security glazing design criteria.

D-1.1.1 Objective. The objective of this procedure for the security glazing selection process is to define glazing system selection criteria. The criteria describe assets associated with a facility, the threat to the assets, the level to which the assets are to be protected against the threat, and any constraints to the glazing system selection. Figure D-1 shows the components of the glazing system criteria. Including security requirements with project criteria allows security to be addressed at the start of the project and to be integrated into the total design efficiently and cost-effectively.

D-1.1.2 Priority. Security requirements comprise only one component of a project criteria package and receive different emphasis depending upon their priority in the project. For example, if a facility is intended to provide maximum protection for an asset, security may receive top priority. This may necessitate modifications to other previously established criteria. The analyst must consider how security fits into the total project design and give it appropriate emphasis.

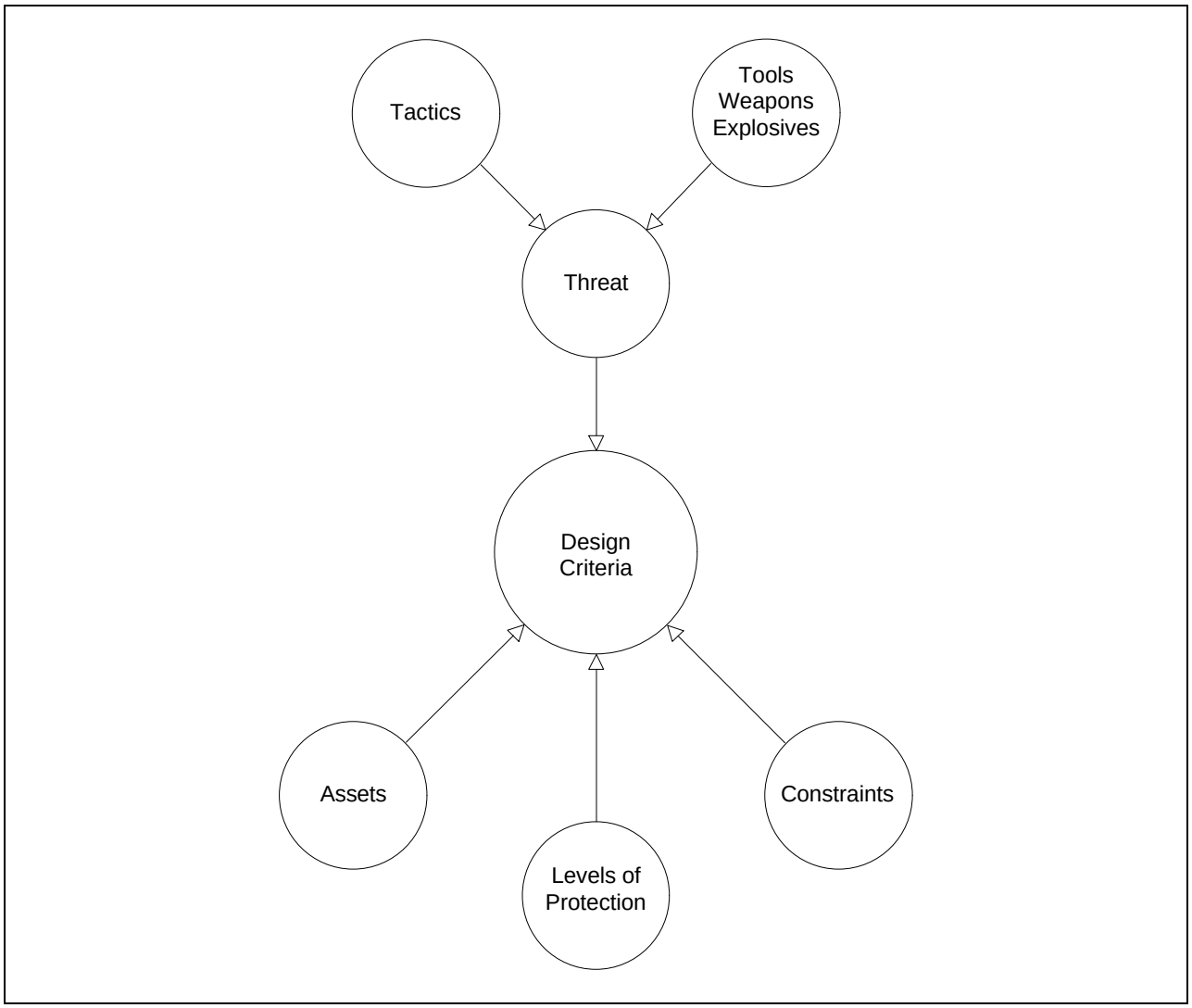


**Figure D-1**
Design Criteria

D-1.2 Planning Procedure. This section presents a four-structure planning procedure to be used in carrying out the planning phase of the security glazing selection process. The four structures address the identification of the elements of selection criteria as summarized in Figure D-2. The planning procedure uses worksheets to guide the analyst through a series of decisions necessary to establish the assets, threats, and levels of protection. Tables of questions which facilitate

decisions and provide supporting information also simplify the procedure.

D-1.2.1 Required Information. The following information is required for the planning procedure:

a) Worksheets (see Appendix B):
   1) None

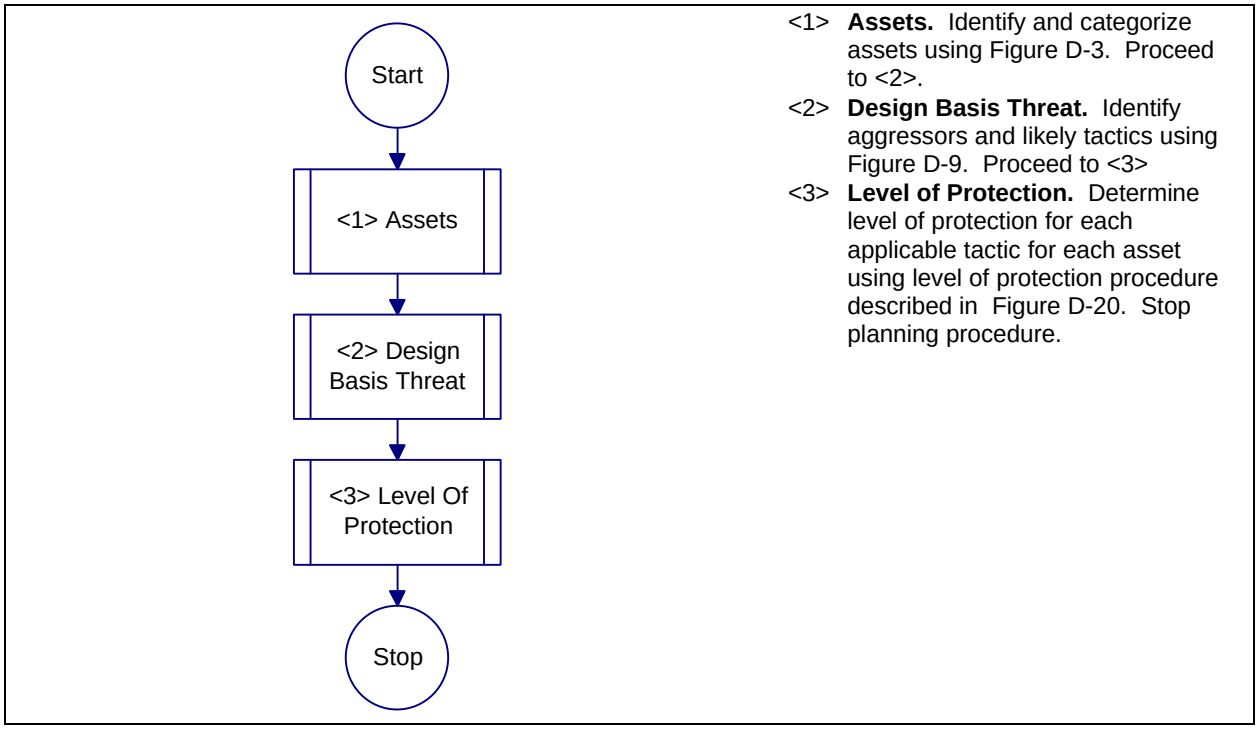


**Figure D-2**
Process Chart and Description: Planning Procedure

D-1.2.2 Information Sensitivity. Information generated as output from the planning procedure indicates the assets the user considers important and the threats against which the protective system is designed. This is sensitive information and will be treated as "For Official Use Only" as a minimum. This applies to completed worksheets and to other documentation which reflects the sensitive information on the worksheets. The information will be considered for classification at an appropriate level when either of the following criteria exist:

a) If classified information is used in generating the output of this procedure, the resulting information may need the derivative classification of the material from which it was derived.
b) Capabilities or design parameters may be protected for operational security reasons. Operational security is especially relevant for overseas projects constructed in high-threat areas and for mission-essential facilities. The installation commander or a designated representative with original classification authority should determine the appropriate classification level to protect the facility design information.

## SECTION D-2: ASSETS

D-2.1 Introduction. Material in this section is taken from Army TM 5-583-1. Analysts familiar with this document may prefer to use it to develop security glazing design criteria.

The design criteria developed in this section relate primarily to assets associated with facilities as opposed to facilities themselves. Protecting individual assets is generally more cost effective than protecting an entire facility. Buildings should only be considered assets if they are the likely target of aggression as in vandalism. Determining the assets to be protected is the first step in establishing any protective system.

D-2.1.1 Asset Types. Assets may be primary or secondary. Primary assets have a direct value to their owner or user and are likely to be the ultimate target of an aggressor. To function properly, a primary asset may depend on other facilities, equipment, or personnel. These other facilities, equipment, or personnel may be considered secondary assets. Damaging the secondary asset may result in the compromise of the primary asset. An example of the relationship between a primary and a secondary asset is a mainframe computer system and its power source. The computer system depends on uninterrupted electrical power supply for its continued operation. The computer system is the primary asset and the power supply is the secondary asset which supports it.

D-2.1.2 Asset Categories. Assets are divided into 14 different categories in this handbook. These categories include the military assets which are commonly targeted by aggressors and which are most frequently of significant value to their users. These categories also include assets which are required to be protected by regulations. The categories are presented in Table D-1.

D-2.2 Assets Procedure. Figure D-3 presents the process chart for the assets procedure. It shows structures for identifying assets and assessing primary and secondary asset values. Figure D-4 provides the description for the assets procedure. It explains each structure presented in Figure D-3.

**Table D-1**
Asset Categories

| Category | Description |
|---|---|
| A | Arms, ammunition, and explosives (AA&E). |
| B | Controlled medical substances and other medically sensitive items. |
| C | Communications/electronics; test, measurement, and diagnostic equipment; night vision devices; and other high-value precision equipment and tool kits. |
| D | Organizational clothing and individual equipment stored at central issue facilities. |
| E | Subsistence items at commissaries, commissary warehouses, and troop issue subsistence facilities. |
| F | Repair parts at installation level supply activities and direct support units with authorized stockage lists. |
| G | Facilities engineering supplies and construction material. |
| H | Audiovisual equipment, training devices, and subcaliber devices. |
| I | Miscellaneous pilferable assets not included above and money. |
| J | Mission-critical or high risk personnel. |
| K | General military/civilian population. |
| L | Industrial and utility equipment. |
| M | Controlled cryptographic items. |
| N | Sensitive information. |

D-2.2.1 Required Information. The following information is required for the assets procedure:

a) List of assets within a facility or associated with a project which are of value to the user or require protection because of policies, command directives, or regulations. People may be considered assets for the purposes of this procedure.
b) Worksheets (see Appendix B):
   1) None

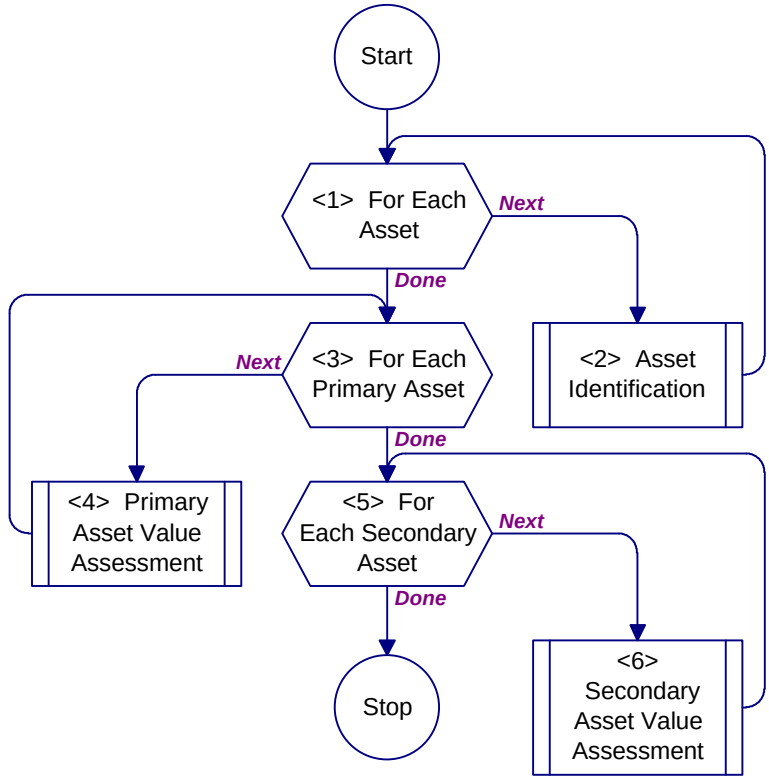


Refer to Figure D-4 for description of procedure.

**Figure D-3**
Process Chart: Assets Procedure

<1> **For Each Asset.** Loop through <2>, asset identification procedure, for each asset. After all assets have been identified, proceed to <3>.
<2> **Asset Identification.** Identify and categorize assets using Figure D-5. Proceed to <1> for next asset.
<3> **For Each Primary Asset.** Loop through <4>, primary asset value assessment procedure, for each primary asset. After all primary assets have been assessed, proceed to <5>.
<4> **Primary Asset Value Assessment.** Assess value of primary asset using Figure D-6. Proceed to <3> for next primary asset.
<5> **For Each Secondary Asset.** Loop through <6>, secondary asset value assessment procedure, for each secondary asset. After all secondary assets have been assessed, return to Figure D-2.
<6> **Secondary Asset Value Assessment.** Assess value of secondary asset using Figure D-8. Proceed to <5> for next secondary asset.

**Figure D-4**
Description: Assets Procedure

D-2.3 Asset Identification Procedure. Figure D-5 shows the process chart and procedure description for the asset identification procedure. It presents and explains structures involved in identifying primary and secondary assets.

D-2.3.1 Required Information. The following information is required for the asset identification procedure:

a) Asset type (primary or secondary)
b) Asset category (A-N)
c) Asset name
d) Worksheets (see Appendix B):
    1) Asset Value/Aggressor Likelihood (AVAL)
    2) Glazing System Design Criteria Summary (DCS)

D-2.4 Primary Asset Value Assessment Procedure. Figure D-6 presents the process chart for the primary asset value assessment procedure. It provides structures required to assess the value of each primary asset under consideration. Figure D-7 provides a description of the assets identification procedure. It explains each structure presented in Figure D-6.

D-2.4.1 Required Information. The following information is required for the primary asset value assessment procedure:

a) Asset category (A-N). This information is obtained using Figure D-5 and the Glazing System Design Criteria Summary worksheet.
b) Asset criticality to military’s mission (negligible to mission-essential).
c) Asset criticality to user’s mission (negligible to mission-essential).
d) Asset replaceability (number of days to obtain replacement).
e) Asset relative value (number, quantity, sensitivity, category, or dollar value).
f) Worksheets (see Appendix B):
    1) Asset Value/Aggressor Likelihood (AVAL)
    2) Glazing System Design Criteria Summary (DCS)

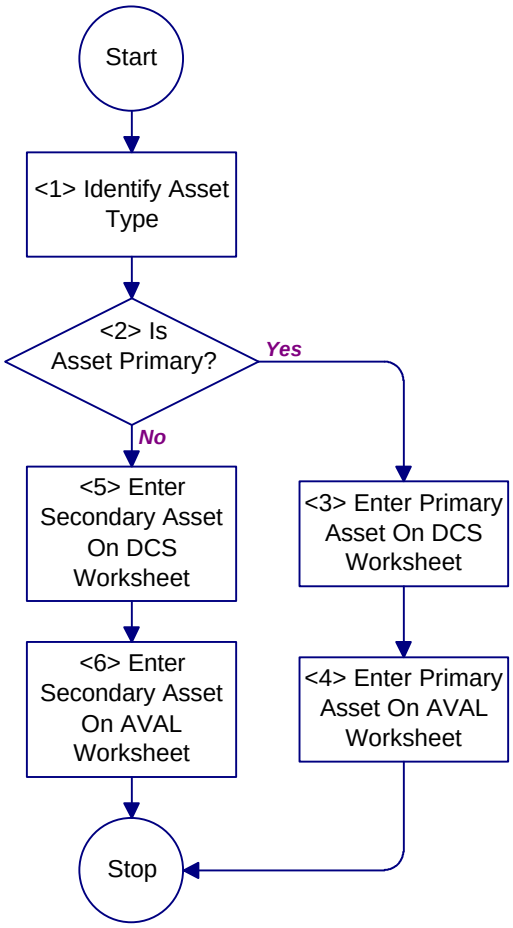


<1> **Identify Asset Type.** Determine whether asset is a primary or a secondary asset. Proceed to <2>.

<2> **Is Asset Primary?** If the asset is determined to be a primary asset, proceed to <3>, otherwise proceed to <5> for a secondary asset.

<3> **Enter Primary Asset on DSC Worksheet.** Enter asset in a space provided in the column labeled "assets" on DCS Worksheet (see Appendix B for all worksheets). Enter a "P" in the column labeled "Primary (P) or Secondary (S)." Also, enter the letter corresponding to the applicable asset category from Table D-1 in the column labeled "Asset Category." Proceed to <4>.

<4> **Enter Primary Asset on AVAL Worksheet.** Enter primary asset in the space provided on AVAL Worksheet. Use a separate form for each primary asset, except where there are several assets in the same facility that are in the same category and are likely to be of the same value to the user. Enter the letter corresponding to the applicable asset category from Table D-1 in the space provided. Enter whatever description is appropriate such as the asset's location or owner in the space provided to further identify it. Return to Figure D-3.

<5> **Enter Secondary Asset on DCS Worksheet.** Enter secondary asset onto DCS Worksheet in the space immediately below the primary asset it supports. Enter an "S" in the column labeled "Primary (P) or Secondary (S)" and enter the letter corresponding to the applicable asset category from Table D-1 in the column labeled "Asset Category." Proceed to <6>.

<6> **Enter Secondary Asset on AVAL Worksheet.** Enter asset in the space provided on AVAL Worksheet, using a separate form for each secondary asset. Enter an "S" in parentheses following the asset name to indicate that it is a secondary asset. Enter the letter corresponding to the asset category from Table D-1 in the space provided. Enter whatever description is appropriate in the space provided to further identify the asset. Also enter the name of the primary asset which the secondary asset supports in parentheses. Return to Figure D-3.

**Figure D-5**
Process Chart and Description: Asset Identification Procedure

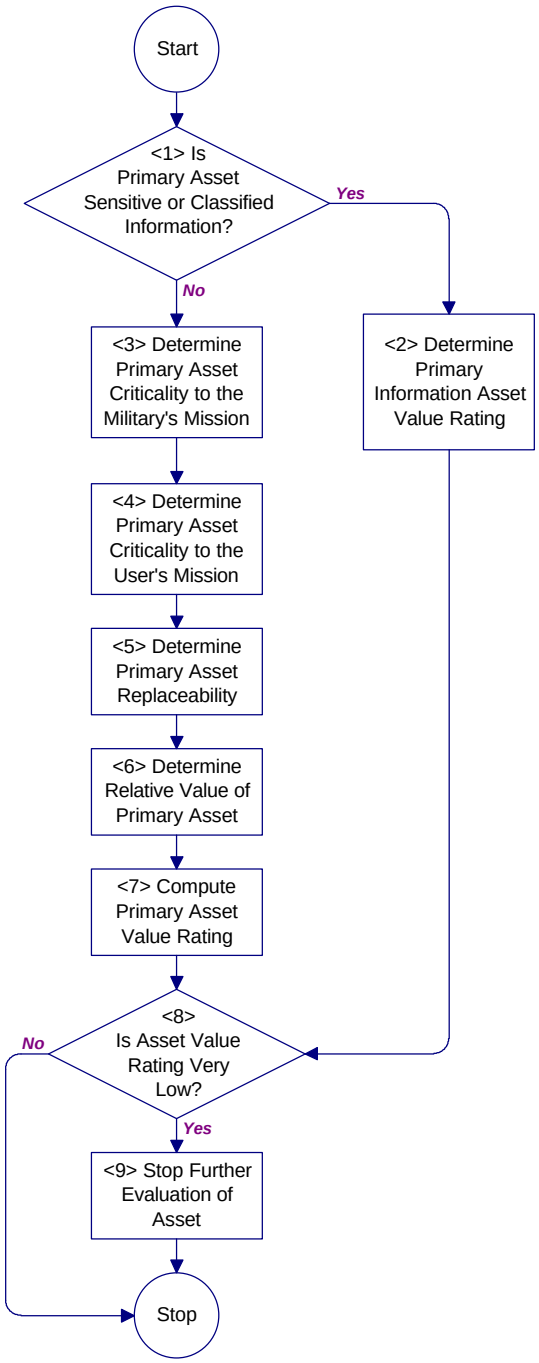


Refer to Figure D-7 for description of procedure.

**Figure D-6**
Process Chart: Primary Asset Value Assessment Procedure

<1> **Is Primary Asset Sensitive or Classified Information?** Where sensitive or classified information is the asset, proceed to <2>. For assets other than information, proceed to <3>.
<2> **Determine Primary Information Asset Value Rating.** Determine the asset value rating for sensitive information using Table D-2. Enter the rating from Table D-2 directly into the value rating column of the AVAL worksheet (see Appendix B for all worksheets). Also enter the value rating in the column labeled "Value" on the DCS worksheet. Proceed to <8>.
<3> **Determine Primary Asset Criticality to the Military's Mission.** Evaluate this factor using Table D-3. Enter the appropriate numerical value in the space provided on the AVAL worksheet. Proceed to <4>.
<4> **Determine Primary Asset Criticality to the User's Mission.** Evaluate this factor using Table D-4. Enter the appropriate numerical value in the space provided on the AVAL worksheet. Proceed to <5>.
<5> **Determine Primary Asset Replaceability.** Evaluate this factor using Table D-5. Enter the appropriate numerical value in the space provided on the AVAL worksheet. Proceed to <6>.
<6> **Determine Relative Value of Primary Asset.** Determine which table to use in evaluating this factor using Table D-6. Go to the designated table and evaluate this factor. Enter the appropriate numerical value in the space provided on the AVAL worksheet. Also enter the table number of the value rating factor table used for the factor in the space provided. Proceed to <7>.
<7> **Compute Primary Asset Value Rating.** Sum the numerical values associated with the four applicable value rating factors (military mission criticality, user criticality, replaceability, and relative value) and compare them to the ranges of sums in Table D-11 to select an asset value rating. Select an asset value rating of very low, low, medium, high, or very high. Enter the sum of the value rating factors and the applicable resultant value rating in the space provided on the AVAL worksheet. Also enter the value rating in the column labeled "Asset Value Rating" on the DCS worksheet.
<8> **Is Asset Value Rating Very Low?** For an asset with an asset value rating of very low, proceed to <9>. Otherwise, return to Figure D-3.
<9> **Stop Further Evaluation of Asset.** Provide asset with measures required by regulations and do not evaluate further. Return to Figure D-3.

**Figure D-7**
Description: Primary Asset Value Assessment Procedure

D-2.4.2 Relative Value for Sensitive Information and Controlled Cryptographic Items. The relative value of sensitive information and controlled cryptographic items is determined based on the degree of sensitivity of the information or the information processed by the equipment. Evaluate this factor using Table D-2.

**Table D-2**
Relative Value for Sensitive Information and Controlled Cryptographic Items

| Information Sensitivity | Resultant Value Rating (information) | Value Rating Factor (equipment) |
|---|---|---|
| For Official Use Only | Very Low | 1 |
| Confidential | Low | 2 |
| Secret | Medium | 3 |
| Top Secret | High | 4 |
| Secure Compartmented Information | Very High | 5 |

D-2.4.3 Criticality to the Military's Mission. This factor addresses the criticality of the asset in its support of the military's capability to mobilize and fight a war. Considering this factor ensures that assets which are critical to military readiness receive a higher priority than those which are not. Evaluate this factor using Table D-3.

**Table D-3**
Criticality to the Military's Mission

| Criticality | Value Rating Factor |
|---|---|
| Asset's loss would have negligible impact on military's mission. | 0 |
| Asset's loss would have minor impact on military's mission. | 1 |
| Asset's loss would have moderate impact on military's mission. | 2 |
| Asset's loss would have significant impact on military's mission. | 3 |
| Asset is mission-critical to the military. Loss would have serious impact on the military's mission. | 4 |
| Asset is mission-essential to the military. Loss cannot be tolerated. | 5 |

D-2.4.4 Criticality to the User's Mission. This factor addresses the criticality of the asset in its support of its user's mission. It accounts for the fact that some assets are critical to their user's mission, but not to the overall military mission. An example of such an asset would be kitchen equipment in an officers' club. The equipment may be critical to the club's mission, but is unlikely to be critical to the war-

fighting mission of the installation’s tenant units. Evaluate this factor using Table D-4.

**Table D-4**
Criticality to the User's Mission

| Criticality | Value Rating Factor |
|---|---|
| Asset’s loss would have negligible impact on user’s mission. | 0 |
| Asset’s loss would have minor impact on user’s mission. | 1 |
| Asset’s loss would have moderate impact on user’s mission. | 2 |
| Asset’s loss would have significant impact on user’s mission. | 3 |
| Asset is mission-critical to the user. Loss would have serious impact on the user’s mission. | 4 |
| Asset is mission-essential to the user. Loss cannot be tolerated. | 5 |

D-2.4.5 Asset Replaceability. This factor addresses the time required to replace assets which have been compromised. Replacement can be either in-kind or with a reasonable substitute and can be either temporary or permanent depending on the judgment of the analyst. This factor accounts for the impact of delay in replacement of assets on the user’s mission. Evaluate this factor using Table D-5.

**Table D-5**
Asset Replaceability

| Replaceability | Value Rating Factor |
|---|---|
| Asset can be replaced within 0 to 5 days. | 0 |
| Asset can be replaced within 6 to 30 days. | 1 |
| Asset can be replaced within 31 to 90 days. | 2 |
| Asset can be replaced within 91 to 180 days. | 3 |
| Asset replacement will require more than 180 days. | 4 |
| Asset replacement is inapplicable. Possession by other than user would harm U.S. interests far beyond immediate user or asset cannot be replaced. | 5 |

D-2.4.6 Relative Asset Value. This factor provides a measure of the relative value of an asset based on measures of value appropriate for particular asset categories. Different tables are used to evaluate the relative values of different asset categories. The different tables reflect the most appropriate ways of measuring cost for the various asset categories. Select the appropriate table for determining relative asset value using Table D-6.

D-2.4.6.1 Relative Value for AA&E. The relative value for AA&E in bulk or unit level storage is based on the risk category of the AA&E as identified in regulations. Risk categories for Army and Navy are designated as Category I through IV. Corresponding risk categories for Air Force AA&E are Very High through Low. Quantity is accounted for in considering the mission criticality of the asset to the military and the user. Evaluate relative value for these assets using Table D-7.

**Table D-6**
Relative Asset Value Table Applicability

| Asset Category | | Applicable Table |
|---|---|---|
| A | Arms, ammunition, and explosives | Table D-7 |
| B | Controlled medical substances and other medically sensitive items | Table D-8 |
| C | Communications/electronics; test, measurement, and diagnostic equipment; night vision devices; and other high-value precision equipment and tool kits | Table D-9 |
| D | Organizational clothing and individual equipment stored at central issue facilities | Table D-9 |
| E | Subsistence items at commissaries, commissary warehouses, and troop issue subsistence facilities | Table D-9 |
| F | Repair parts at installation level supply activities and direct support units with authorized stockage lists | Table D-9 |
| G | Facilities engineering supplies and construction material | Table D-9 |
| H | Audiovisual equipment, training devices, and subcaliber devices | Table D-9 |
| I | Miscellaneous pilferable assets not included above and money | Table D-9 |
| J | Mission-critical or high risk personnel | Table D-10 |
| K | General military/civilian population | Table D-10 |
| L | Industrial and utility equipment | Table D-9 |
| M | Controlled cryptographic items | Table D-2 |
| N | Sensitive information | Table D-2 |

**Table D-7**
Relative Value for AA&E

| Asset Category | Value Rating Factor |
|---|---|
| Uncategorized | 1 |
| Category IV/Low | 2 |
| Category III/Medium | 3 |
| Category II/High | 4 |
| Category I/Very High | 5 |

D-2.4.6.2 Relative Value for Controlled Medical Substances and Other Medically Sensitive Items. Relative value for these assets is measured by their Drug Enforcement Agency designations, their designation as sensitive items, and whether they are stored in a pharmacy, ward, or clinic; research, development, test, and

engineering facility; or in bulk storage. Contact the appropriate medical personnel to determine the sensitivities. Quantity is accounted for in considering the mission criticality of the asset to the military and the user. Evaluate relative value of these assets using Table D-8.

**Table D-8**
Relative Value for Controlled Medical Substances and Other Medically Sensitive Items

| Asset Description | Value Rating Factor |
|---|---|
| Non-sensitive pharmaceuticals and other medical items | 1 |
| Medically sensitive items in pharmacy, ward, clinic, or RDT&E facilities | 2 |
| Medically sensitive items in bulk storage facilities | 3 |
| Note R controlled substances (including Schedule I drugs) or note Q controlled substances in pharmacy, ward, clinic, or RDT&E facilities | 4 |
| Note R controlled substances (including Schedule I drugs) or note Q controlled substances in bulk storage facilities | 5 |

D-2.4.6.3 Relative Value for Other Assets. Relative value for assets not included in the tables above (except people as assets) is evaluated based on the monetary value of the asset. The monetary value may be determined for an inventory of assets or for individual assets, whichever is most appropriate for the quantity of the assets present in the area being analyzed. Actual quantity of the assets is accounted for in considering the mission criticality of the assets to the military and the user. Evaluate relative value for these assets using Table D-9.

**Table D-9**
Relative Value for Other Assets

| Asset Characteristic | Value Rating Factor |
|---|---|
| Value of asset inventory is less than $50,000 or value of individual asset is less than $5,000. | 0 |
| Value of asset inventory is greater than or equal to $50,000 and less than $100,000 or value of individual asset is greater than or equal to $5,000 and less than $10,000. | 1 |
| Value of asset inventory is greater than or equal to $100,000 and less than $250,000 or value of individual asset is greater than or equal to $10,000 and less than $25,000. | 2 |
| Value of asset inventory is greater than or equal to $250,000 and less than $500,000 or value of individual asset is greater than or equal to $25,000 and less than $50,000. | 3 |
| Value of asset inventory is greater than or equal to $500,000 and less than $1,000,000 or value of individual asset is greater than or equal to $50,000 and less than $100,000. | 4 |
| Value of asset inventory is greater than or equal to $1,000,000 or value of individual asset is greater than or equal to $100,000. | 5 |

D-2.4.6.4 Relative Value for People as Assets. Relative value for people as assets is evaluated based on the number of people present in the area being analyzed because establishing a monetary value for human lives is impractical. Separate scales are provided for mission-critical and high risk personnel and general military and civilian population to account for differences in relative value. Further consideration of relative importance of people is accounted for in their mission criticality to the military and the user. Evaluate relative value for these assets using Table D-10 and using the most appropriate scale for the asset being analyzed.

**Table D-10**
Relative Value for People as Assets

| Probable Level of Occupancy | Value Rating Factor |
|---|---|
| Number of mission-critical or high risk personnel in facility is likely to be fewer than 3 or general population of facility is likely to be fewer than 10. | 1 |
| Number of mission-critical or high risk personnel in facility is likely to be greater than or equal to 3 and fewer than 10 or general population in facility is likely to be greater than or equal to 10 and fewer than 30. | 2 |
| Number of mission-critical or high risk personnel in facility is likely to be greater than or equal to 10 and fewer than 20 or general population in facility is likely to be greater than or equal to 30 and fewer than 60. | 3 |
| Number of mission-critical or high risk personnel in facility is likely to be greater than or equal to 20 and fewer than 30 or general population in facility is likely to be greater than or equal to 60 and fewer than 100. | 4 |
| Number of mission-critical or high risk personnel in facility is likely to be greater than or equal to 30 or general population in facility is likely to be greater than or equal to 100. | 5 |

**Table D-11**
Asset Value Rating

| Sum of Value Rating Factors | Rating |
|---|---|
| 0 to 5 | Very Low (VL) |
| 6 to 9 | Low (L) |
| 10 to 13 | Medium (M) |
| 14 to 17 | High (H) |
| 18 to 20 | Very High (VH) |

D-2.5 Secondary Asset Value Assessment Procedure. Figure D-8 presents the process chart and procedure description for the secondary asset value assessment procedure. It provides structures and clarifications required to assess the value of each secondary asset under consideration.

D-2.5.1 Required Information. The following information is required for the secondary asset value assessment procedure:

a) Impact on primary asset of secondary asset being compromised (negligible to catastrophic).
b) Primary asset resultant value rating (VL, L, M, H, VH). This rating is determined from Figure D-6 and is recorded on the Glazing System Design Criteria Summary worksheet.
c) Worksheets (see Appendix B):
   1) Asset Value/Aggressor Likelihood (AVAL) for secondary asset
   2) Glazing System Design Criteria Summary (DCS) for primary asset

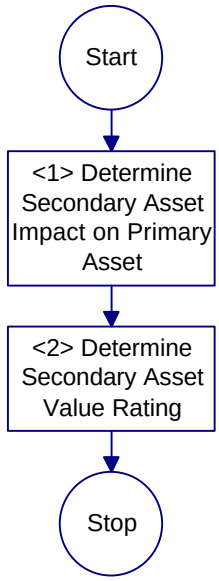


<1> **Determine Secondary Asset Impact on Primary Asset.** Use Table D-12 to determine the impact on the primary asset of the secondary asset being compromised. Proceed to <2>.

<2> **Determine Secondary Asset Value Rating.** In Table D-13, find the secondary asset value at the intersection of the secondary asset impact rating and the previously determined assett value rating of the primary asset that it supports. Enter the result in the asset value rating column on the AVAL worksheet (see Appendix B for all worksheets). Enter the value rating in the column labeled "Asset Value Rating" on the DCS worksheet. Return to Figure D-3.

**Figure D-8**
Process Chart and Description: Secondary Asset Value Assessment Procedure

**Table D-12**
Secondary Asset Impact

| Secondary Asset Impact Factor | Secondary Asset Impact Rating |
|---|---|
| Negligible | VL |
| Minor | L |
| Significant | M |
| Serious | H |
| Catastrophic | VH |

**Table D-13**
Secondary Asset Value Rating

| Secondary Asset Impact Rating | Primary Asset Value Rating | | | | |
|---|---|---|---|---|---|
| | **VH** | **H** | **M** | **L** | **VL** |
| **VH** | VH | H | M | L | VL |
| **H** | VH | H | M | L | VL |
| **M** | H | H | M | L | VL |
| **L** | H | H | M | L | VL |
| **VL** | M | M | L | L | VL |

## SECTION D-3: DESIGN BASIS THREAT

D-3.1 Introduction. Material in this section is taken from Army TM 5-583-1. Analysts familiar with this document may prefer to use it to develop security glazing design criteria.

The threat to an asset forms the basis for the design of its protective system. Threat must be defined in terms that are meaningful to the designer, i.e., the design parameters of the aggressor tactics and their associated tools, weapons, and explosives. To define the threat, the analyst determines the aggressors likely to threaten the asset and the likelihood that they will attempt to compromise it. From this information, the analyst can determine which tactics the aggressors will likely employ and the threat severity levels associated with those tactics. The threat severity levels describe the specific tools, weapons, and explosives associated with each tactic.

D-3.2 Design Basis Threat Procedure. Figure D-9 presents the procedures required to complete the design basis threat. The procedures shown and described in Figure D-9 cover identifying likely aggressors, assessing likelihood of aggression, identifying applicable tactics and severity levels, and consolidating tactics into design basis threat.

D-3.2.1 Required Information. The following information is required for the design basis threat procedure:

a) List of assets. This information is available from Figure D-5 and recorded on the Glazing System Design Criteria Summary worksheet.
b) Worksheets (see Appendix B):
    1) None

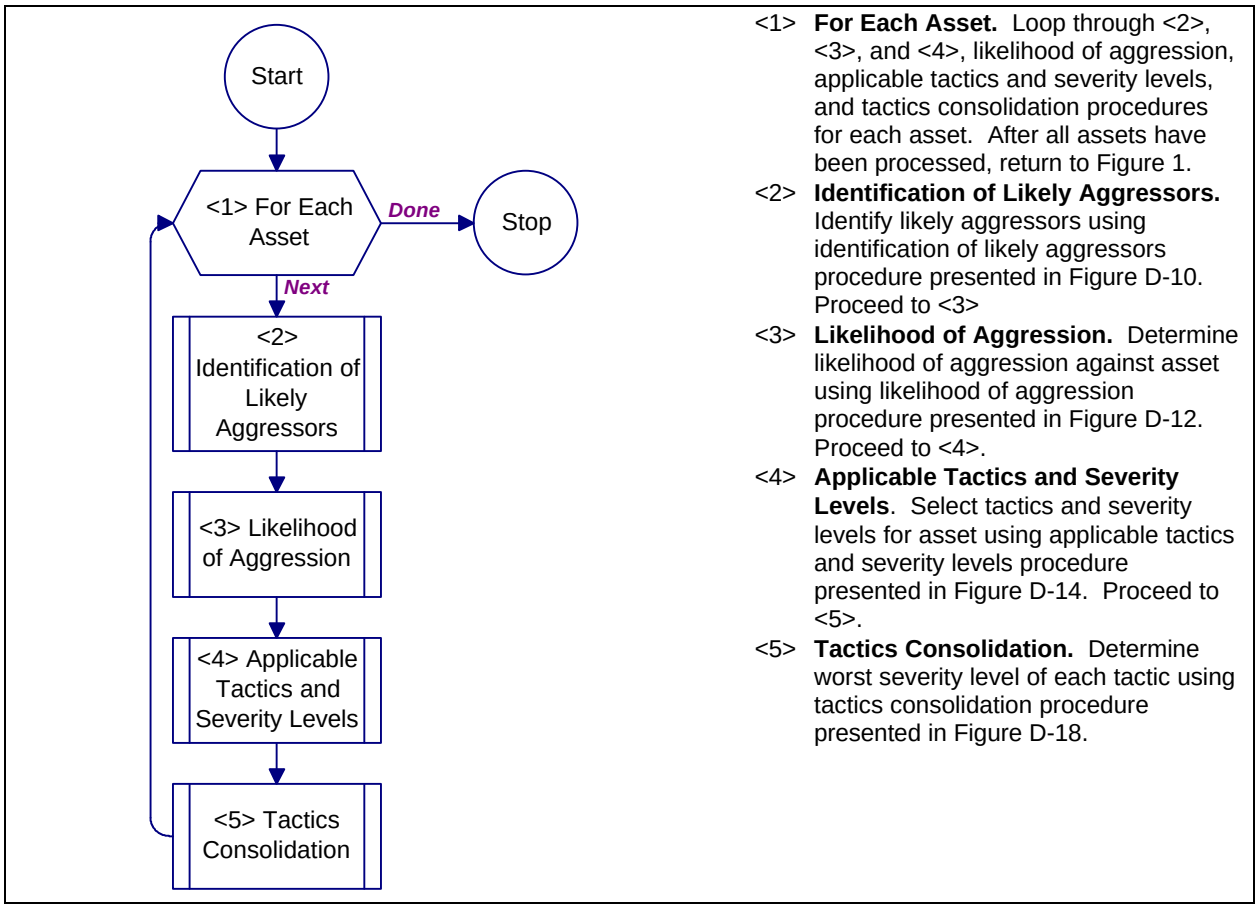


**Figure D-9**
Process Chart and Description: Design Basis Threat Procedure

D-3.3 Identification of Likely Aggressors Procedure. Figure D-10 presents the process chart and procedure description for the identification of likely aggressors procedure. It shows and describes structures for identifying likely aggressors for primary and secondary assets.

D-3.3.1 Required Information. The following information is required for the identification of likely aggressors procedure:

a) Worksheets (see Appendix B):
   1) Asset Value/Aggressor Likelihood (AVAL) for both primary and secondary assets.

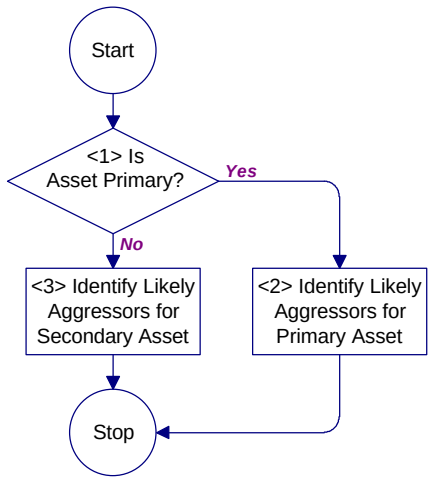


<1> **Is Asset Primary?** If asset being evaluated is a primary asset, proceed to <2>, otherwise, for a secondary asset, proceed to <3>.

<2> **Identify Likely Aggressors for Primary Asset.** Indicate on the AVAL worksheet (see Appendix B for all worksheets) which aggressor types are identified in Figure D-11 for an asset category by placing an "X" in the spaces adjacent to each of the applicable aggressor types. Return to Figure D-9.

<3> **Identify Likely Aggressors for Secondary Asset.** For secondary assets, use only the aggressor types indicated which are common to both the asset categories for the secondary asset and the primary asset it supports. This ensures that aggressors who are indicated for the asset category corresponding to the secondary asset, but not for the primary asset, are not considered. Place an "X" in the spaces adjacent to each applicable aggressor type on the AVAL worksheet. Return to Figure D-9.

**Figure D-10**
Process Chart and Description: Identification of Likely Aggressors Procedure

D-3.3.2 Identify Likely Aggressor. Figure D-11 indicates which of the ten aggressor types defined in Section 3, Aggressor Threats and Tactics, are likely to attempt to compromise assets in each of the 14 established categories. The aggressor selections in Figure D-11 were made based on historical study of the common goals and characteristics of the aggressor types. These represent potential aggressors. Further evaluation relative to the locality of the asset is required to make a final determination.

Aggressor types for secondary assets are limited to those which are common to both the asset categories for the secondary asset and the primary asset it supports. If aggressors are not interested in the primary asset, it is unlikely that they will attack the secondary assets which support it. For example, consider communications equipment (in asset category C) to be a primary asset and the power distribution system (in asset category L) to be its supporting secondary asset. Figure D-11 indicates that three types of criminals and saboteurs apply to the communications equipment and that vandals, extremist protesters, terrorists, and saboteurs apply to the power system. The only applicable aggressor for the secondary asset is the one the primary and secondary assets have in common: saboteurs.

| | *Asset Category* | *Aggressors* | | | | | | | | | |
|---|---|---|---|---|---|---|---|---|---|---|---|
| | | Unsophisticated Criminals | Sophisticated Criminals | Organized Criminal Groups | Vandals/Activists | Extremist Protesters | CONUS Terrorists | OCONUS Terrorists | Paramilitary OCONUS Terrorists | Saboteurs | Spies |
| **A** | Arms, ammunition, and explosives | X | X | X | X | | X | X | X | X | |
| **B** | Controlled medical substances and other medically sensitive items | X | X | X | | | | | | | |
| **C** | Comm./electronics; test, measurement, & diagnostic equip.; & high-value precision equip. & tool kits | X | X | X | | | | | | X | |
| **D** | Organizational clothing and individual equipment stored at central issue facilities | X | X | | | | | | | | |
| **E** | Subsistence items at commissaries, commissary warehouses, and troop issue subsistence facilities | X | X | | | | | | | | |
| **F** | Repair parts at installation level supply activities and direct support units with authorized stockage lists | X | X | | | | | | | | |
| **G** | Facilities engineering supplies and construction material | X | X | | | | | | | | |
| **H** | Audiovisual equipment, training devices, and subcaliber devices | X | X | | | | | | | | |
| **I** | Miscellaneous pilferable assets not included above and money | X | X | X | | | | | | | |
| **J** | Mission-critical or high risk personnel | | | | | X | X | X | X | X | |
| **K** | General military/civilian population | | | | | X | X | X | X | | |
| **L** | Industrial and utility equipment | | | | X | X | X | X | X | X | |
| **M** | Controlled cryptographic items | | X | X | | | | | | X | X |
| **N** | Sensitive information | | | | | | | | | | X |

**Figure D-11**
Potential Aggressors Selection Table

D-3.4 Likelihood of Aggression Procedure. Figure D-12 presents the process chart and procedure description for the likelihood of aggression procedure. The likelihood that a given aggressor will attempt to compromise an asset is evaluated using the likelihood rating factors below. The factors measure the value of the asset to the aggressor, the history of or potential for incidents, and the vulnerability of the asset. Three likelihood factors are used to evaluate each of these measures of likelihood. The factors are weighted to emphasize vulnerability. Generally, only the vulnerability of an asset can be changed through security measures. The asset's value to an aggressor and the history of or potential for events cannot be controlled. Weighting the likelihood factors related to vulnerability allows the user of this procedure to decrease risk through applying security measures.

D-3.4.1 Required Information. The following information is required for the likelihood of aggression procedure:

a) Asset visibility (very low visibility to very high visibility).
b) Asset usefulness to aggressor.
c) Asset availability (widely available to only available at this location).
d) Number of local incidents in the past (no incidents to more than five incidents in the past 3 years).
e) Number of nearby incidents in the past (no incidents to more than five incidents in the past 3 years).
f) Potential for future incidents (unlikely to very likely).
g) Asset accessibility.
h) Effectiveness of law enforcement (extremely effective to ineffective).
i) Deterrence factor of security.
j) Worksheets (see Appendix B):
    1) Asset Value/Aggressor Likelihood (AVAL)

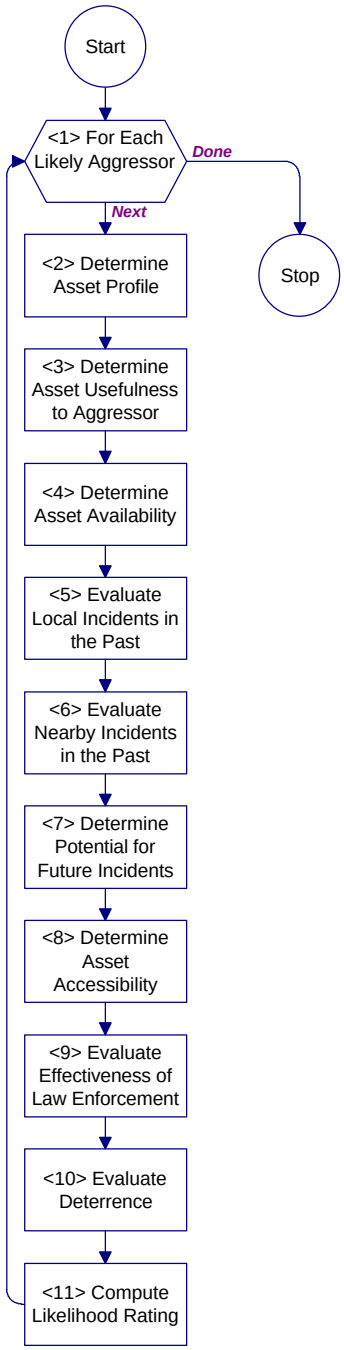


<1> **For Each Likely Aggressor.** For the asset under consideration, do steps <2> through <11> for each aggressor identified on the AVAL worksheet (see Appendix B for all worksheets). When done, return to Figure D-9.

<2> **Determine Asset Profile.** Evaluate this factor using Table D-14 for the potential aggressor. Record the numerical value in the asset profile column of the AVAL worksheet. Proceed to <3>.

<3> **Determine Asset Usefulness to Aggressor.** Select the applicable usefulness of asset factor table using Table D-15. From the applicable table, evaluate the factor for the potential aggressor and record the numerical value in the usefulness column of the AVAL worksheet. Proceed to <4>.

<4> **Determine Asset Availability.** Evaluate this factor using Table D-18 for the potential aggressor. Record the numerical value in the asset availability column of the AVAL worksheet. Proceed to <5>.

<5> **Evaluate Local Incidents in the Past.** Evaluate this factor using Table D-19 for the potential aggressor. Record the numerical value in the local incidents column of the AVAL worksheet. Proceed to <6>.

<6> **Evaluate Nearby Incidents in the Past.** Evaluate this factor using Table D-20 for the potential aggressor. Record the numerical value in the nearby incidents column of the AVAL worksheet. Proceed to <7>.

<7> **Determine Potential for Future Incidents.** Evaluate this factor using Table D-21 for the potential aggressor. Record the numerical value in the potential incidents column of the AVAL worksheet. Proceed to <8>.

<8> **Determine Asset Accessibility.** Select the applicable asset accessibility factor table using Table D-22. From the applicable table, evaluate the factor for the potential aggressor and record the numerical value in the accessibility column of the AVAL worksheet. Proceed to <9>.

<9> **Evaluate Effectiveness of Law Enforcement.** Evaluate this factor using

<10> Table **D-27** for the potential aggressor. Record the numerical value in the law enforcement effectiveness column of the AVAL worksheet. Proceed to <10>.

<11> **Evaluate Deterrence.** Evaluate this factor using Table D-28 for the potential aggressor. Record the numerical value in the deterrence column of the AVAL worksheet. Proceed to <11>.

<12> **Compute Likelihood Rating.** Sum the numerical values associated with the nine applicable likelihood rating factors and compare them to the ranges of sums in Table **D-29** to select a likelihood rating. Enter the sums of the likelihood rating factors and the applicable likelihood rating in the spaces provided on the AVAL worksheet. Aggressors whose likelihood rating is very low do not pose a significant threat and should receive no further consideration. Proceed to <1> for next potential aggressor.

**Figure D-12**
Process Chart: Likelihood of Aggression

D-3.4.2 Asset Profile. This factor addresses the aggressors' likely awareness of the asset's existence and its visibility to them in terms of their perception of its importance or value (see Table D-14). Aggressors may be less likely to attempt to compromise assets about which they know very little.

**Table D-14**
Asset Profile

| Level of Visibility | Likelihood Rating Factor |
|---|---|
| Asset has very low visibility. Aggressor is probably not aware of its existence. | 1 |
| Asset has low visibility. Existence of asset is probably not well known to aggressor. | 2 |
| Asset has medium visibility. Existence of asset is probably known to aggressor. | 3 |
| Asset has high visibility. Existence of asset probably well known to aggressor. | 4 |
| Asset has very high visibility. Existence of asset is obvious to aggressor. | 5 |

D-3.4.3 Asset Usefulness to Aggressor. This factor assesses the usefulness of the asset to potential aggressors. Depending on the asset category and the aggressor's likely goals toward the asset, usefulness is measured based on the asset's cash value, its direct applicability to the aggressor's goals, or its publicity value.

D-3.4.3.1 Usefulness for Assets with Cash Value. Figure D-13 evaluates asset usefulness where aggressors are most likely to attempt to compromise the asset because of its potential monetary value to them. Note that the numerical values differ for different aggressor types. This accounts for the fact that more sophisticated aggressors are not likely to be interested in lower value assets. The values also reflect the fact that unsophisticated criminals are less likely to target higher value assets due to the difficulty in disposing of them. Use the ranges of monetary values associated with individual assets or asset inventories as appropriate and as used previously in determining the asset's relative value using Figure D-13.

**Table D-15**
Asset Usefulness to Aggressor Factor Applicability Table

| Asset Category | | Applicable Table |
|---|---|---|
| A | Arms, ammunition, and explosives | (a) |
| B | Controlled medical substances and other medically sensitive items | Figure D-13 |
| C | Communications/electronics; test, measurement, and diagnostic equipment; night vision devices; and other high-value precision equipment and tool kits | (b) |
| D | Organizational clothing and individual equipment stored at central issue facilities | Figure D-13 |
| E | Subsistence items at commissaries, commissary warehouses, and troop issue subsistence facilities | Figure D-13 |
| F | Repair parts at installation level supply activities and direct support units with authorized stockage lists | Figure D-13 |
| G | Facilities engineering supplies and construction material | Figure D-13 |
| H | Audiovisual equipment, training devices, and subcaliber devices | Figure D-13 |
| I | Miscellaneous pilferable assets not included above and money | Figure D-13 |
| J | Mission-critical or high risk personnel | (c) |
| K | General military/civilian population | Table D-17 |
| L | Industrial and utility equipment | (c) |
| M | Controlled cryptographic items | (d) |
| N | Sensitive information | Table D-16 |

Notes:

a. Select Figure D-13 if the aggressor’s goal is likely to be to sell the AA&E and select Table D-16 if the aggressor’s goal is likely to be to use the AA&E in future activities or if the AA&E fulfills the aggressor’s immediate goals.
b. Select Figure D-13 for criminals and Table D-16 for saboteurs.
c. Select Table D-16 for saboteurs and select Table D-17 for terrorists, vandals/activists, and extremist protesters.
d. Select Figure D-13 for criminals and Table D-16 for spies.

| *Asset Characteristics* | *Likelihood Rating Factor* | | | |
|---|---|---|---|---|
| | Unsophisticated Criminals | Sophisticated Criminals | Organized Criminal Groups | Terrorists |
| Value of asset inventory is less than $50,000 or value of individual asset is less than $5,000. | 3 | 1 | 0 | 1 |
| Value of asset inventory is greater than or equal to $50,000 and less than $100,000 or value of individual asset is greater than or equal to $5,000 and less than $10,000. | 4 | 2 | 1 | 2 |
| Value of asset inventory is greater than or equal to $100,000 and less than $250,000 or value of individual asset is greater than or equal to $10,000 and less than $25,000. | 5 | 3 | 2 | 3 |
| Value of asset inventory is greater than or equal to $250,000 and less than $500,000 or value of individual asset is greater than or equal to $25,000 and less than $50,000. | 5 | 4 | 3 | 4 |
| Value of asset inventory is greater than or equal to $500,000 and less than $1,000,000 or value of individual asset is greater than or equal to $50,000 and less than $100,000. | 4 | 5 | 4 | 5 |
| Value of asset inventory is greater than or equal to $1,000,000 or value of individual asset is greater than or equal to $100,000. | 3 | 5 | 5 | 5 |

**Figure D-13**
Usefulness of Assets with Cash Value

D-3.4.3.2 Usefulness for Assets with Direct Application to Aggressor's Goals. Table D-16 evaluates usefulness where aggressors are most likely to attempt to compromise the asset to use it directly in future activities or to satisfy immediate

goals. An example would be stealing explosives to use in a future terrorist attack.

**Table D-16**
Level of Usefulness to Aggressor

| Level of Usefulness to Aggressor | Likelihood Rating Factor |
|---|---|
| Asset has no usefulness to aggressor's immediate or future goals. | 0 |
| Asset has minor usefulness to aggressor's immediate or future goals. | 1 |
| Asset has moderate usefulness to aggressor's immediate or future goals. | 2 |
| Asset has significant usefulness to aggressor's immediate or future goals. | 3 |
| Asset is highly useful to aggressor's immediate or future goals. | 4 |
| Asset is critical to aggressor's immediate or future goals. | 5 |

D-3.4.3.3 Usefulness for Assets with Publicity Value. Table D-17 evaluates usefulness where aggressors are most likely to attempt to compromise an asset because of the potential publicity its compromise would generate.

D-3.4.4 Asset Availability. This factor addresses the availability of the asset or similar assets at places other than the location under consideration. Aggressors may be less likely to attempt to compromise an asset in one particular location if it is available elsewhere as well. This is particularly true where the asset is available off the installation.

**Table D-17**
Usefulness for Assets with Publicity Value

| Aggressor's Estimation of Asset's Publicity Value | Likelihood Rating Factor |
|---|---|
| Aggressor is likely to believe asset's loss would result in insignificant publicity. | 0 |
| Aggressor is likely to believe asset's loss would result in minor publicity. | 1 |
| Aggressor is likely to believe asset's loss would result in moderate publicity. | 2 |
| Aggressor is likely to believe asset's loss would result in significant publicity. | 3 |
| Aggressor is likely to believe asset's loss would result in considerable publicity. | 4 |
| Aggressor is likely to believe asset's loss would result in worldwide publicity. | 5 |

**Table D-18**
Asset Availability

| Determination of Availability | Likelihood Rating Factor |
|---|---|
| Asset is widely available off the installation. | 1 |
| Asset has limited availability off the installation. | 2 |
| Asset is widely available on the installation, but is not available off the installation. | 3 |
| Asset has limited availability on the installation, but is not available off the installation | 4 |
| Asset is only available at this location. | 5 |

D-3.4.5 Local Incidents in the Past. This factor addresses the history of attempts by the applicable aggressor to compromise similar assets at the installation on which the asset is located or in the immediate vicinity of the installation.

**Table D-19**
Local Incidents in the Past

| Number of Incidents at the Same Installation in the Past | Likelihood Rating Factor |
|---|---|
| There were no incidents involving similar assets on this installation or in its immediate vicinity in the past 3 years. | 1 |
| There was one incident involving similar assets on this installation or in its immediate vicinity in the past 3 years. | 2 |
| There were two or three incidents involving similar assets on this installation or in its immediate vicinity in the past 3 years. | 3 |
| There were four or five incidents involving similar assets on this installation or in its immediate vicinity in the past 3 years. | 4 |
| There were more than five incidents involving similar assets on this installation or in its immediate vicinity in the past 3 years. | 5 |

D-3.4.6 Nearby Incidents in the Past. This factor addresses the history of attempts by a particular type of aggressor to compromise similar assets on or around other installations in the same general geographic area as the installation under consideration. Such activity may show a trend which may indicate an increased potential for activity on the installation being considered. Establish the general geographic area appropriate for the installation. Examples of general geographic areas within CONUS may include state borders or the vicinities of major metropolitan areas. Use national boundaries to determine geographic areas OCONUS.

**Table D-20**
Nearby Incidents in the Past

| Number of Incidents in the Geographical Area in the Past | Likelihood Rating Factor |
|---|---|
| There were no incidents involving similar assets on or around installations in the geographical area in the past 3 years. | 1 |
| There was one incident involving similar assets on or around installations in the geographical area in the past 3 years. | 2 |
| There were two or three incidents involving similar assets on or around installations in the geographical area in the past 3 years. | 3 |
| There were four or five incidents involving similar assets on or around installations in the geographical area in the past 3 years. | 4 |
| There were more than five incidents involving similar assets on or around installations in the geographical area in the past 3 years. | 5 |

D-3.4.7 Potential for Future Incidents. This factor addresses the probability that aggressors will attempt to compromise an asset in the future.

D-3.4.8 Asset Accessibility. This factor addresses protective measures which are in place for existing facilities or planned for new and existing facilities. Accessibility is assessed differently for different types of assets based upon how they are usually stored for assets subject to theft or upon the effectiveness of construction in stopping weapons effects where assets are subject to destruction, death, or injury. Evaluate this factor using Table D-23 to Table D-26 for each aggressor as indicated in Table D-22. In Table D-23 through Table D-25, intrusion detection systems (IDS) facilitate delay after detection by detecting aggressors before they reach a barrier so the barrier may provide delay until a response force arrives. Protective layers in Table D-25 refer to envelopes of building components which completely enclose an asset.

**Table D-21**
Potential for Future Incidents

| Determination of Probability for Future Incidents | Likelihood Rating Factor |
|---|---|
| It is unlikely that there will be any future incidents involving this asset at this installation. | 1 |
| There is some possibility that there will be a future incident involving this asset at this installation. | 2 |
| It is probable that there will be a future incident involving this asset at this installation. | 3 |
| It is likely that there will be a future incident involving this asset at this installation. | 4 |
| It is very likely that there will be a future incident involving this asset at this installation. | 5 |

**Table D-22**
Asset Accessibility Factor Applicability Table

| Asset Category | | Applicable Table |
|---|---|---|
| A | Arms, ammunition, and explosives | (a) |
| B | Controlled medical substances and other medically sensitive items | Table D-25 |
| C | Communications/electronics; test, measurement, and diagnostic equipment; night vision devices; and other high-value precision equipment and tool kits | Table D-25 |
| D | Organizational clothing and individual equipment stored at central issue facilities | Table D-25 |
| E | Subsistence items at commissaries, commissary warehouses, and troop issue subsistence facilities | Table D-25 |
| F | Repair parts at installation level supply activities and direct support units with authorized stockage lists | Table D-25 |
| G | Facilities engineering supplies and construction material | Table D-25 |
| H | Audiovisual equipment, training devices, and subcaliber devices | Table D-25 |
| I | Miscellaneous pilferable assets not included above and money | Table D-25 |
| J | Mission-critical or high risk personnel | Table D-26 |
| K | General military/civilian population | Table D-26 |
| L | Industrial and utility equipment | Table D-26 |
| M | Controlled cryptographic items | Table D-25 |
| N | Sensitive information | Table D-25 |

Notes:

a. Select Table D-23 where AA&E is in bulk storage and select Table D-24 where AA&E is in unit level storage.

**Table D-23**
Accessibility of Bulk Storage of AA&E

| Type of Storage | Likelihood Rating Factor |
|---|---|
| AA&E is stored in standard magazines within a fenced or walled area with security lighting and is monitored by IDS installed to facilitate delay after detection or is under constant surveillance. | 2 |
| AA&E is stored in standard magazines within a fenced or walled area and is monitored by IDS installed to facilitate delay after detection or is under constant surveillance. | 4 |
| AA&E is stored in standard magazines within a fenced or walled area with security lighting. Roving patrols check the area hourly. | 6 |

**Table D-24**
Accessibility of Unit Level Storage of AA&E

| Type of Storage | Likelihood Rating Factor |
|---|---|
| AA&E is stored in a standard magazine or arms room and is monitored by IDS installed to facilitate delay after detection or is under constant surveillance. The facility or magazine is within a fenced or walled area with security lighting or building exterior lighting. | 2 |
| AA&E is stored in a standard magazine within a fenced or walled area or in a standard arms room and is monitored by IDS installed to facilitate delay after detection or is under constant surveillance. | 4 |
| AA&E is stored in a standard magazine within a fenced or walled area with security lighting or in a standard arms room in a facility with exterior lighting. The area is checked hourly by a roving patrol. | 6 |
| AA&E is not stored in a standard magazine or arms room. It is stored within a fenced or walled area with perimeter lighting or in a facility with exterior lighting. The area is checked hourly by a roving patrol. | 8 |

**Table D-25**
Accessibility of Other Assets Stored Inside Facilities

| Type of Storage | Likelihood Rating Factor |
|---|---|
| Asset is located within multiple protective layers capable of providing delay. One of the protective layers is a safe or vault. IDS is installed to facilitate delay after detection or there are on-site guards. | 2 |
| Asset is located within multiple protective layers capable of providing delay. IDS is installed to facilitate delay after detection or there are on-site guards. | 4 |
| Asset is located within only one protective layer capable of providing delay and is monitored by IDS or an on-site guard. | 6 |
| Asset is located within only one protective layer capable of providing delay. The facility is checked hourly by a roving patrol. | 8 |
| Asset is located within only one protective layer capable of providing delay. | 10 |

**Table D-26**
Accessibility of Assets Subject to Destruction, Death, or Injury

| Location of Asset | Likelihood Rating Factor |
|---|---|
| Asset is located within the interior of a reinforced concrete or masonry building within a fenced or walled area with perimeter IDS or on-site guards. | 2 |
| Asset is located within the interior of a reinforced concrete or masonry building within a fenced or walled area. | 4 |
| Asset is located within a reinforced concrete or masonry building. | 6 |
| Asset is located within a building of lightweight construction. | 8 |

D-3.4.9 Effectiveness of Law Enforcement. This factor addresses the general attitude of the local populace toward respecting and cooperating with the law enforcement community and

the effectiveness of the local law enforcement. Public attitudes toward law enforcement should include consideration of the environment for crime. Effectiveness of law enforcement includes the quality of law enforcement personnel and the presence of an effective response force.

**Table D-27**
Effectiveness of Law Enforcement

| Perceived Regard for Law Enforcement | Likelihood Rating Factor |
|---|---|
| Law enforcement is extremely effective. Local populace has very high respect for law and police. | 2 |
| Law enforcement is highly effective. Local populace has high respect for law and police. | 4 |
| Law enforcement is moderately effective. Local populace has moderate respect for law and police. | 6 |
| Law enforcement is mostly ineffective. Local populace has low respect for law and police. | 8 |
| Law enforcement is ineffective. Local populace has very little respect for law and police. | 10 |

D-3.4.10 Deterrence. This factor addresses the aggressors' perception of the possibility that they will successfully compromise the asset and escape based upon obvious protective measures which tend to have a deterrent effect. Table D-28 addresses deterrent measures for assets stored inside.

**Table D-28**
Deterrence for Assets Stored Inside Facilities

| Aggressor's Perception of the Possibility of Success | Likelihood Rating Factor |
|---|---|
| Aggressor would perceive a very low possibility of success and escape. Asset appears to be heavily protected. The building housing the asset is constructed of reinforced concrete or masonry, it has glazing, window barriers or is windowless, and has heavy steel doors. Obvious protective measures include fencing or perimeter walls, security lighting, access control, and either guards or IDS and CCTV. | 2 |
| Aggressor would perceive a low possibility of success and escape. Asset appears to be well-protected. The building housing the asset is constructed of reinforced concrete or masonry, it has glazing, window barriers or is windowless, and has heavy steel doors. Obvious protective measures include fencing or walls, security lighting, and IDS. | 4 |
| Aggressor would perceive a medium possibility of success and escape. The building housing the asset is constructed of reinforced concrete or masonry, it has glazing, window barriers or is windowless, and has heavy steel doors. There are some visible protective measures, including exterior lighting, and guard patrols at hourly intervals. | 6 |
| Aggressor would perceive a high possibility of success and escape. The building housing the asset is of lightweight construction and has glazing, window barriers or is windowless. There are few visible protective measures. Only building entrances are lit. | 8 |
| Aggressor would perceive a very high possibility of success and escape. The building housing the asset is of lightweight construction without window barriers. There are no visible protective measures. | 10 |

D-3.4.11 Likelihood Rating. The likelihood that an aggressor will attempt to compromise an asset is determined using the results of evaluating each of the likelihood rating factors. Sum the numerical values associated with the nine applicable likelihood rating factors and compare them to the ranges of sums in Table D-29 to select a likelihood rating. Select a likelihood rating of very low, low, medium, high, or very high. Enter the sums of the likelihood rating factors and the applicable likelihood rating factors in the spaces provided on the AVAL

worksheet for each aggressor. Aggressors whose likelihood rating is very low do not pose a significant threat and should receive no further consideration.

**Table D-29**
Likelihood Rating

| Sum of Likelihood Rating Factors | Likelihood Rating |
|---|---|
| 11 to 17 | Very Low (VL) |
| 18 to 29 | Low (L) |
| 30 to 41 | Medium (M) |
| 42 to 53 | High (H) |
| 54 to 60 | Very High (VH) |

D-3.5 Applicable Tactics and Severity Levels Identification Procedure. The tactics that aggressors are likely to use in attempting to compromise an asset can be selected based on the aggressor's likely objectives and the asset category. Figure D-14 presents the process chart for the applicable tactics and severity levels identification procedure. Figure D-15 explains each structure presented in Figure D-14.

D-3.5.1 Required Information. The following information is required for the applicable tactics and severity levels identification procedure:

a) Knowledge of applicable tactics.
b) Worksheets (see Appendix B):
    1) Asset Value/Aggressor Likelihood (AVAL)
    2) Glazing System Tactic and Threat Severity Level (TTSL)

D-3.5.2 Identify Tactic Threat Severity Levels. A range of tools, weapons, or explosives may apply to each tactic. The tactic's threat severity level defines which tools, weapons, or explosives within that range apply for a given threat. Threat severity levels are designated as very low, low, medium, high, or very high. Different tactics may have different numbers of possible threat severity levels for different aggressors. In some cases, a tactic only has one possible threat severity level. In those cases, the severity level is indicated by a "yes." The threat severity levels are selected based upon the likelihood of aggression. Selecting threat severity levels considering likelihood of aggression is based on risk acceptance. If the

likelihood of aggression for an aggressor is low, the protective system can be designed for a threat severity level lower than the maximum threat severity level for that aggressor. This is based on the user assuming that the aggressors will expend less effort and fewer resources on assets which are less attractive to them. The user accepts the risk that this assumption is correct and that the aggressor does not attack at a higher threat severity level.

D-3.5.3 Applicability of Indicated Threat Severity Levels. The threat severity levels indicated are for generic aggressors in unspecified locations. If intelligence indicates that a different threat severity level applies based on known aggressor characteristics or site or asset specific considerations, these threat severity levels may be modified. In addition, if such considerations indicate that a specific tactic is inapplicable to threats against the asset under consideration, the tactic may be deleted from the threat. In either of these cases, provide a written explanation justifying the variance from the tactic and threat severity level guidance provided.

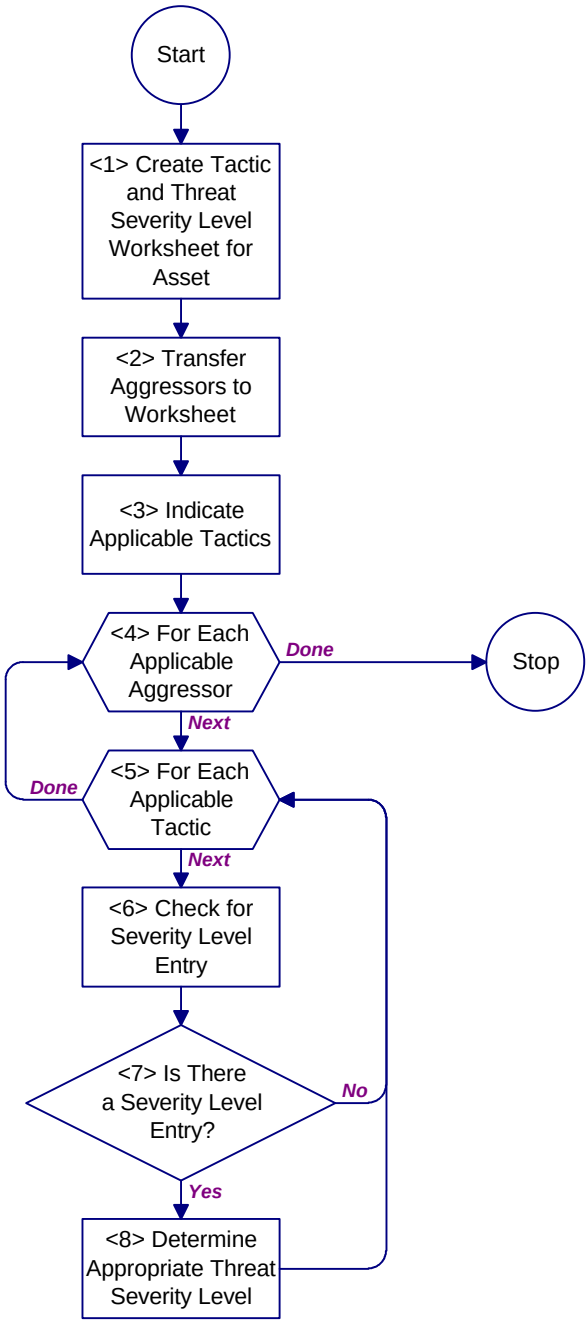


Refer to Figure D-15 for description of procedure.

**Figure D-14**
Process Chart: Applicable Tactics and Severity Levels Identification Procedure

<1> **Create Tactic and Threat Severity Level Worksheet for Asset.** Use a separate TTSL for each asset (see Appendix B for all worksheets). Enter the information necessary to identify the asset into the space labeled "asset" on the form. Such information should include the name of the asset and the letter corresponding to the applicable asset category for primary assets. For secondary assets, add an indication of their being secondary assets and add the primary asset that they support. Proceed to <2>.

<2> **Transfer Aggressors to Worksheet.** Transfer aggressors that apply to the asset from the AVAL worksheet. Enter an "X" in the box adjacent to each applicable aggressor type on the TTSL worksheet. Do not include aggressors whose likelihood rating is very low. Proceed to <3>.

<3> **Indicate Applicable Tactics.** Indicate which tactics apply to the asset as determined using Figure D-16 by entering an "X" in the box adjacent to each applicable tactic on the TTSL worksheet. If, in the judgment of the analyst, the tactic indicated in Figure D-16 does not apply for the particular asset being analyzed, do not enter an "X" for that tactic. Proceed to <4>.

<4> **For Each Applicable Aggressor.** For the asset under consideration, do <5> through <8> for each aggressor identified on the TTSL worksheet. When done, return to Figure D-9.

<5> **For Each Applicable Tactic.** For the applicable aggressor under consideration, do <6> through <8> for each tactic identified on the TTSL worksheet. When done, return to <4> for the next applicable aggressor.

<6> **Check for Severity Level Entry.** Using Figure D-17, read across from the applicable aggressors and down from the applicable tactics. Under an applicable tactic, read down from the applicable likelihood rating (low, medium, high or very high). At the intersection of each aggressor and tactic/likelihood pair, there is either an entry of possible threat severity level or no entry at all. Proceed to <7>.

<7> **Is there a Severity Level Entry?** If there is a threat severity level entry, proceed to <8>. Otherwise, return to <5> for the next applicable tactic.

<8> **Determine Appropriate Threat Severity Level.** Transfer the threat severity level found on Figure D-17 to the TTSL worksheet. Enter the threat severity level at the at the intersection of the aggressor and tactic pair. Return to Figure D-9.

**Figure D-15**

Description: Applicable Tactics and Severity Levels Identification Procedure

| | *Asset Category* | *Tactics* | | | | |
|---|---|---|---|---|---|---|
| | | Moving Vehicle Bomb | Stationary Vehicle Bomb | Exterior | Ballistics | Forced Entry |
| **A** | Arms, ammunition, and explosives | | | X | X | X |
| **B** | Controlled medical substances and other medically sensitive items | | | | | X |
| **C** | Comm./electronics; test, measurement, & diagnostic equip.; & high-value precision equip. & tool kits | | | X | X | X |
| **D** | Organizational clothing and individual equipment stored at central issue facilities | | | | | X |
| **E** | Subsistence items at commissaries, commissary warehouses, and troop issue subsistence facilities | | | | | X |
| **F** | Repair parts at installation level supply activities and direct support units with authorized stockage lists | | | | | X |
| **G** | Facilities engineering supplies and construction material | | | | | X |
| **H** | Audiovisual equipment, training devices, and subcaliber devices | | | | | X |
| **I** | Miscellaneous pilferable assets not included above and money | | | | | X |
| **J** | Mission-critical or high risk personnel | X | X | X | X | X |
| **K** | General military/civilian population | X | X | X | X | X |
| **L** | Industrial and utility equipment | | X | X | X | X |
| **M** | Controlled cryptographic items | | | | | X |
| **N** | Sensitive information | | | | | X |

**Figure D-16**
Potential Tactic Selection Table

| *Aggressors* | *Tactics* | | | | | | | | | | | | | | | | | | | |
|---|---|---|---|---|---|---|---|---|---|---|---|---|---|---|---|---|---|---|---|---|
| | Moving Vehicle Bomb | | | | Stationary Vehicle Bomb | | | | Exterior | | | | Ballistics | | | | Forced Entry | | | |
| | *Likelihood*† | | | | *Likelihood* | | | | *Likelihood* | | | | *Likelihood* | | | | *Likelihood* | | | |
| | L | M | H | V | L | M | H | V | L | M | H | V | L | M | H | V | L | M | H | V |
| Unsophisticated Criminals | | | | | | | | | | | | | | | | | L | L | L | L |
| Sophisticated Criminals | | | | | | | | | | | | | | | | | L | L | M | M |
| Organized Criminal Groups | | | | | | | | | | | | | | | | | L | M | H | H |
| Vandals/Activists | | | | | | | | | | | | | | | | | L | L | L | L |
| Extremist Protesters | | | | | | | | | M | M | M | M | M | M | H | H | L | L | L | L |
| CONUS Terrorists | | | | | L | L | M | M | M | M | H | H | M | M | H | H | L | L | M | M |
| OCONUS Terrorists | | | | | L | M | H | H | M | M | H | H | M | H | V | V | L | M | H | H |
| PM OCONUS Terrorists | L | M | H | V | L | M | H | V | M | M | H | H | M | H | V | V | M | H | V | V |
| Saboteurs | | | | | | | | | M | M | H | H | M | H | V | V | H | H | V | V |
| Spies | | | | | | | | | | | | | | | | | L | L | L | L |

†L–Low
M–Medium
H–High
V–Very High

**Figure D-17**
Threat Severity Levels for Tactics

D-3.6 Tactics Consolidation Procedure. The design basis threat is the threat upon which design will be based. It represents the worst-case threat severity levels for each applicable tactic for a given asset. Figure D-18 presents the process chart and procedure description for the tactics consolidation procedure.

D-3.6.1 Required Information. The following information is required for the tactics consolidation procedure:

a) Worksheets (see Appendix B):
   1) Glazing System Tactic and Threat Severity Level (TTSL)
   2) Glazing System Design Criteria Summary (DCS)

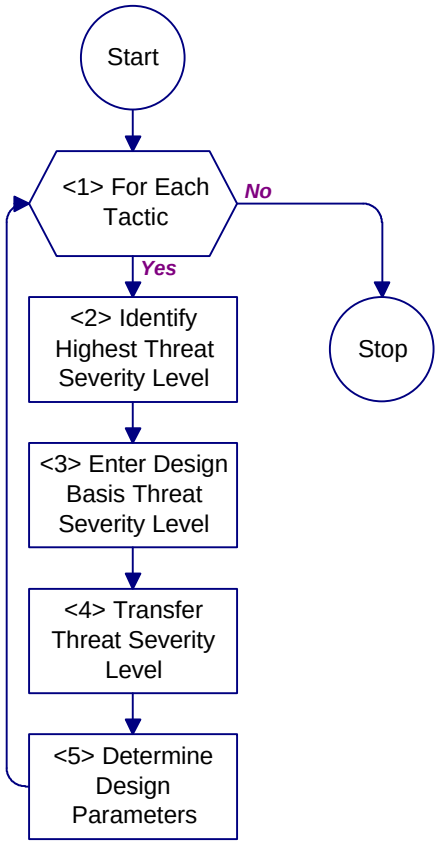


<1> **For Each Tactic.** For the asset under consideration, do <2> through <5> for each tactic identified on the Glazing System Tactic and Threat Severity Level (TTSL) worksheet (see Appendix B for all worksheets). When done, return to Figure D-9.

<2> **Identify Highest Threat Severity Level.** Identify the highest threat severity level for a tactic across all aggressor types as indicated on the TTSL worksheet. Proceed to <3>.

<3> **Enter Design Basis Threat Severity Level.** Enter the design basis threat severity level for a tactic in the spaces provided at the bottom of the TTSL worksheet. Proceed to <4>.

<4> **Transfer Threat Severity Level.** Transfer the threat severity level to the DCS worksheet by entering the design basis threat severity level for a tactic in the spaces associated with the identified asset. Proceed to <5>.

<5> **Determine Design Parameters.** Refer to Table D-30 to determine the design parameters (tools, weapons, and explosives) associated with each of the threat severity levels for each tactic. In tactics with multiple threat severity levels, each threat severity level also includes the tools, weapons, and explosives from lower threat severity levels.

**Figure D-18**
Process Chart and Description: Tactics Consolidation Procedure

**Table D-30**
Threat Parameters

| Aggressor Tactics | Design Basis Threat Severity | Weapons | Tools |
|---|---|---|---|
| Moving Vehicle Bomb | Very High | 1,000 lb (455 kg) TNT | 12,000 lb (5,455 kg) Truck |
| | High | 500 lb (227 kg) TNT | 5,000 lb (2,273 kg) Truck |
| | Medium | 220 lb (100 kg) TNT | 4,000 lb (1,818 kg) Car |
| | Low | 50 lb (23 kg) TNT | 4,000 lb (1,818 kg) Car |
| Stationary Vehicle Bomb | Very High | 1,000 lb (455 kg) TNT | 12,000 lb (5,455 kg) Truck |
| | High | 500 lb (227 kg) TNT | 5,000 lb (2,273 kg) Truck |
| | Medium | 220 lb (100 kg) TNT | 4,000 lb (1,818 kg) Car |
| | Low | 50 lb (23 kg) TNT | 4,000 lb (1,818 kg) Car |
| Exterior | High | IED (40 lb (18 kg) TNT) | None |
| | Medium | IED (2 lb (1 kg) TNT) | |
| Ballistics | Very High | SD-Rifle AP (7.62 AP) | None |
| | High | HPW-D (7.62 Ball and Shotgun) | |
| | Medium | UL-SPSA (.44 Magnum) | |
| | Low | UL-MPSA (Super .38) | |
| Forced Entry | Very High | SD-Rifle AP (7.62 AP) | Unlimited hand, power, and thermal tools, and limited explosives |
| | High | UL-SPSA (.44 Magnum) | Unlimited hand, power, and thermal tools |
| | Medium | None | Unlimited hand and battery-powered tools |
| | Low | | Limited hand tools |

## SECTION D-4: LEVEL OF PROTECTION

D-4.1 Introduction. Some material in this section is taken from Army TM 5-583-1. Analysts familiar with this document may prefer to use it to develop security glazing design criteria.

Levels of protection refer to the degree to which an asset is protected against the threat based on its value to its user. A high level of protection corresponds to a low probability that an asset will be compromised and attacked. For some tactics, level of protection refers to the amount of damage a facility or asset would be allowed to sustain in the event of an attack. A low amount of allowed damage equates to a high level of protection. For other tactics, level of protection refers to the probability that an aggressor will be defeated before the asset is compromised. A high probability of defeat equates to a high level of protection. There are one or more levels of protection (very high, high, medium, or low) for each of the five tactics, as shown in Table D-31.

The levels of protection are described in detail for each tactic in subsequent sections where they are used as a basis of design. Levels of protection apply to all threat severity levels for each tactic.

D-4.2 Level of Protection Procedure. Figure D-19 presents the process chart and Figure D-20 provides a description for the level of protection procedure. They furnish structures and explanations for determining the level protection for each tactic for each asset.

D-4.2.1 Required Information. The following information is required for the level of protection procedure:

a) General knowledge of appropriate levels of protection for assets
b) Worksheets (see Appendix B):
    1) Glazing System Design Criteria Summary (DCS)

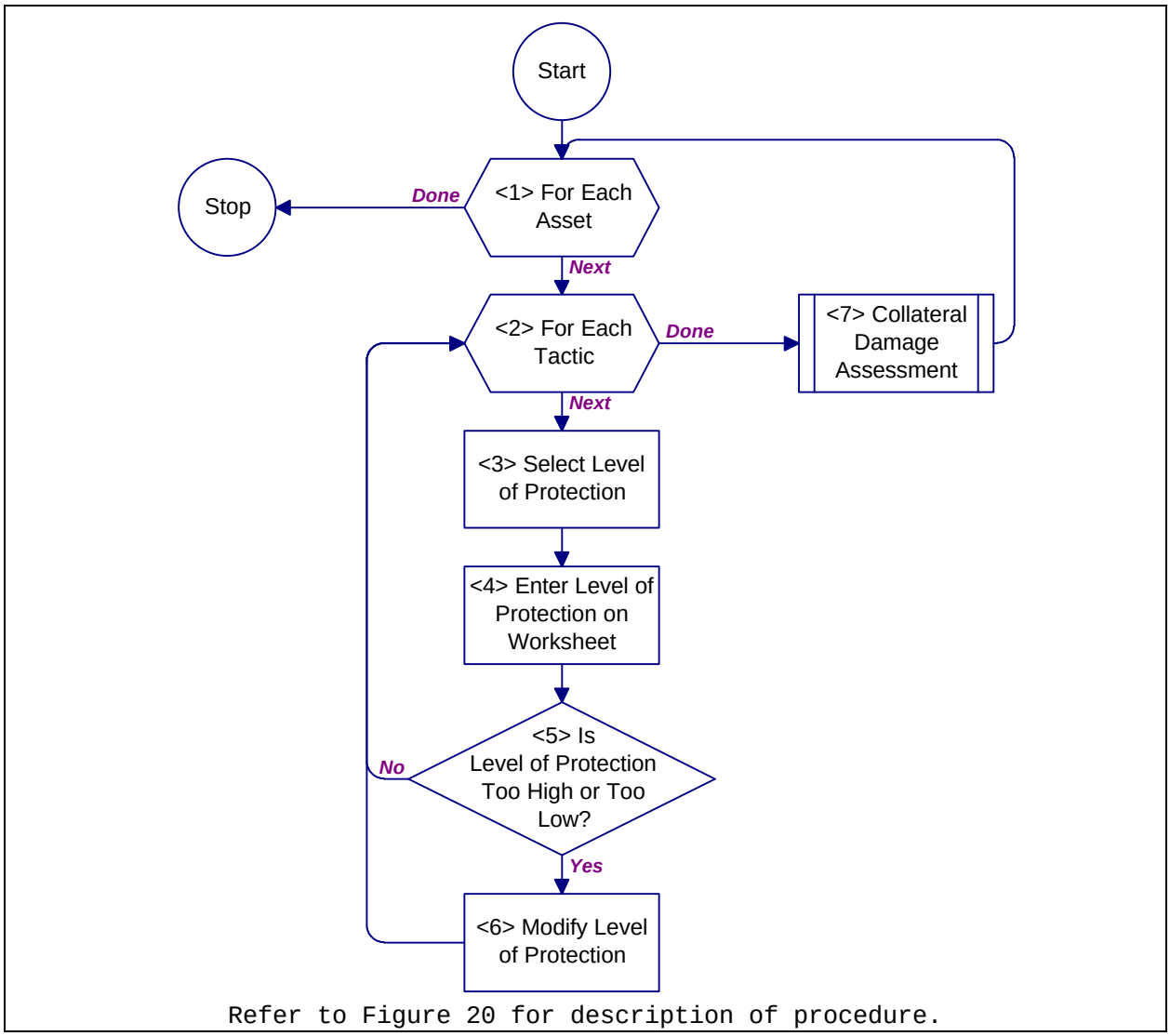


Refer to Figure 20 for description of procedure.

**Figure D-19**
Process Chart: Level of Protection Procedure

<1> **For Each Asset.** Do <2> through <6> for each asset identified on the DCS worksheet. When done, return to Figure D-2.
<2> **For Each Tactic.** Do <3> through <6> for each applicable tactic with a design basis threat entry on the DCS worksheet (see Appendix B for all worksheets). When done, proceed to <7>.
<3> **Select Level of Protection.** Use Table D-31 and the asset's value rating listed on the DCS worksheet to select an appropriate level of protection. Proceed to <4>.
<4> **Enter Level of Protection on Worksheet.** Enter the level of protection for the applicable tactic on the DCS worksheet in the column labeled "LOP" associated with the applicable tactic. Proceed to <5>.
<5> **Is Level of Protection Too High or Too Low?** If the user determines that the level of protection selected for a tactic is too high or too low, proceed to <6>. If the user accepts the level of protection selected, proceed to <2> for the next tactic.
<6> **Modify Level of Protection.** Modify the level of protection for the applicable tactic on the DCS worksheet. Lowering the level of protection may result in the asset being protected less than its value warrants with a higher risk of asset compromise. Conversely, raising the level of protection may result in greater protection than the asset value warrants. Proceed to <2> for the next tactic.
<7> **Collateral Damage Assessment.** Estimate the potential for damage to the asset as a result of a bomb attack against a neighboring asset. Assess collateral damage using Figure D-21. Proceed to <1> for the next asset.

**Figure D-20**
Description: Level of Protection Procedure

**Table D-31**
Levels of Protection Selection

| Tactic | Asset Value | | | |
|---|---|---|---|---|
| | **L** | **M** | **H** | **VH** |
| Moving Vehicle Bomb | L | H | H | H |
| Stationary Vehicle Bomb | L | H | H | H |
| Exterior | L | H | H | H |
| Ballistics | H | H | H | H |
| Forced Entry | L | M | H | VH |

D-4.3 Collateral Damage Assessment Procedure. Typically, facilities are not located in isolation, but clustered together, to facilitate efficient operations. If an asset of interest is in a facility that is clustered with one or more other buildings, then a collateral damage assessment is required. A collateral damage assessment uses the design basis threat for neighboring assets (assets that are housed within 1,500 feet (450 m) of the asset of interest) to determine a threat severity level for collateral damage. Figure D-21 presents a process chart and Figure D-22 provides a description for the collateral damage assessment procedure.

D-4.3.1 Required Information. The following information is required for the collateral damage assessment procedure:

a) Distance from facility housing asset of interest to facility housing neighboring assets.
b) Bomb tactics applicable to asset of interest. This information is available on the Glazing System Design Criteria Summary (DCS) worksheet for asset of interest.
c) Vehicle bomb tactics appliable to neighboring assets. This information is available on the Glazing System Design Criteria Summary (DCS) worksheet for the neighboring assets.
d) Worksheets (see Appendix B):
    1) Collateral Damage Assessment (CDA)

D-4.4 Collateral Damage Threat Severity Level Procedure. Figure D-23 presents the process chart and Figure D-24 the procedure description for the collateral damage procedure.

D-4.4.1 Required Information. The following information is required for the collateral damage threat severity level procedure:

a) Vehicle bomb tactics of neighboring asset. This information is contained on the Glazing System Design Criteria Summary (DCS) for the neighboring asset.
b) Worksheets (see Appendix B):
    1) Collateral Damage

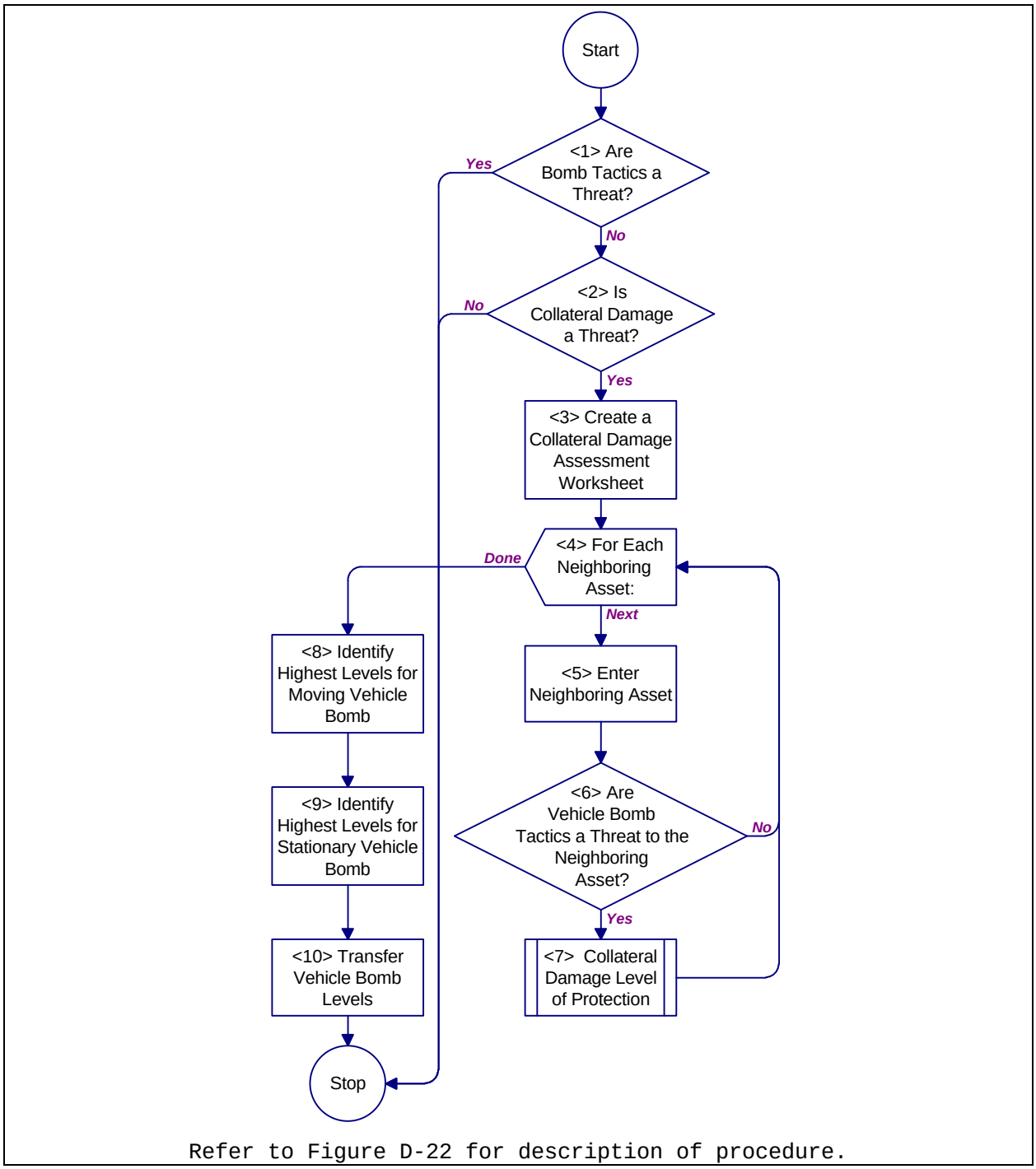


Refer to Figure D-22 for description of procedure.

**Figure D-21**
Process Chart: Collateral Damage Assessment Procedure

<1> **Are Bomb Tactics a Threat?** For the asset of interest, if vehicle bombs or exterior bombs have a design basis threat and level of protection on the DCS worksheet (see appendix B for all worksheets) then return to Figure D-20. Otherwise, proceed to <2>.

<2> **Is Collateral Damage a Threat?** Refer to Table D-32 for the asset of interest and the appropriate asset category. If the asset category is marked with an "X", proceed to <3>. Otherwise, return to Figure D-20.

<3> **Create a Collateral Damage Assessment Worksheet.** Get a Collateral Damage worksheet and enter the project, asset, and date at the top of the worksheet. Proceed to <4>.

<4> **For Each Neighboring Asset:** For each asset within 1,500 feet (450 m), do <5> and <6>. When done, proceed to <7>.

<5> **Enter Neighboring Asset.** Identify the neighboring asset in column (a) of the Collateral Damage worksheet. Enter the distance between the facility housing the neighboring asset and the facility housing the asset of interest in column (b). Enter the design basis threats for moving and stationary vehicle bombs (row k and columns a and b of the TTSL worksheet) in columns (c) and (g), respectfully. Proceed to <6>.

<6> **Are Vehicle Bomb Tactics a Threat to the Neighboring Asset?** If a neighboring asset has a design basis threat for either a moving vehicle bomb, a stationary vehicle bomb, or both (columns (c) and (g) of the Collateral Damage worksheet), proceed to <7>. Otherwise, proceed to <4> for next neighboring asset.

<7> **Collateral Damage Levels of Protection.** Determine levels of protection from collateral damage using the procedure in Figure D-23. Proceed to <4> for next neighboring asset.

<8> **Identify Highest Levels for Moving Vehicle Bomb.** Identify the highest level of protection for the moving vehicle bomb tactic (column (f) of the CD worksheet) and enter that value in the space provided at the bottom of the CD worksheet. For the level of protection selected, find the highest threat severity level (column (c) of the CD worksheet) and enter that value in the space provided at the bottom of the CD worksheet. Proceed to <9>.

<9> **Identify Highest Levels for Stationary Vehicle Bomb.** Identify the highest level of protection for the stationary vehicle bomb tactic (column (j) of the CD worksheet) and enter that value in the space provided at the bottom of the CD worksheet. For the level of protection selected, find the highest threat severity level (column (g) of the CD worksheet) in the space provided at the bottom of the CD worksheet. Proceed to <10>.

<10> **Transfer Vehicle Bomb Levels.** Transfer threat severity levels for vehicle bombs to the DCS worksheet by entering the design basis threat severity level for each tactic (columns (c) and (g) of the CD worksheet) in the "DBT" spaces associated with the identified asset. Transfer levels of protection for vehicle bombs to the DSC worksheet by entering the level of protection for each tactic (columns (f) and (j) of the CD worksheet) in the "LOP" spaces associated with the identified asset. Return to Figure D-20.

**Figure D-22**
Description: Collateral Damage Assessment Procedure

**Table D-32**
Asset Categories with Collateral Damage Potential

| Asset Category | Potential |
|---|---|
| A Arms, ammunition, and explosives | X |

| | | |
|---|---|---|
| B | Controlled medical substances and other medically sensitive items | |
| C | Communications/electronics; test, measurement, and diagnostic equipment; night vision devices; and other high-value precision equipment and tool kits | X |
| D | Organizational clothing and individual equipment stored at central issue facilities | |
| E | Subsistence items at commissaries, commissary warehouses, and troop issue subsistence facilities | |
| F | Repair parts at installation level supply activities and direct support units with authorized stockage lists | |
| G | Facilities engineering supplies and construction material | |
| H | Audiovisual equipment, training devices, and subcaliber devices | |
| I | Miscellaneous pilferable assets not included above and money | |
| J | Mission-critical or high risk personnel | X |
| K | General military/civilian population | X |
| L | Industrial and utility equipment | X |
| M | Controlled cryptographic items | |
| N | Sensitive information | |

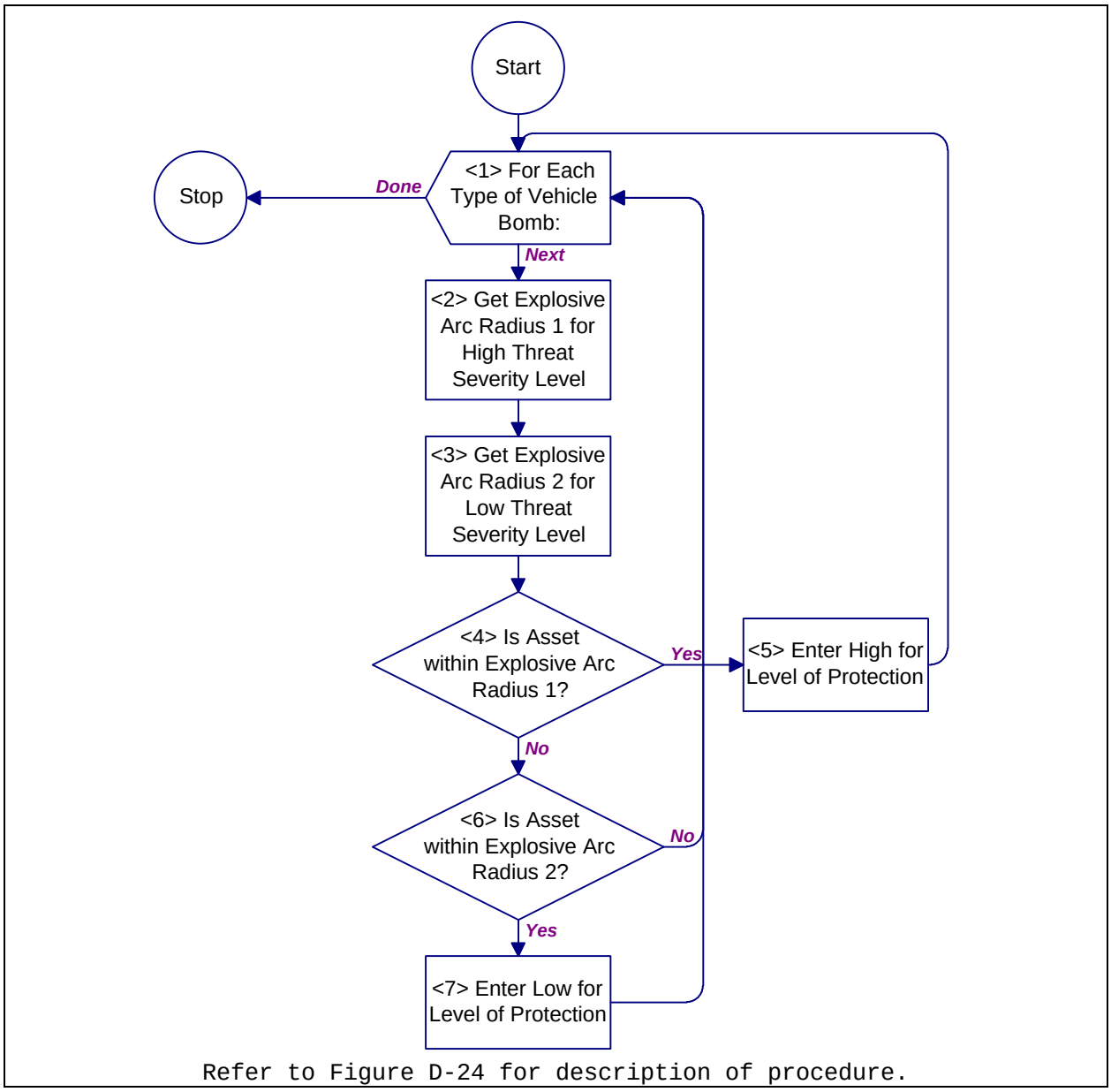


**Figure D-23**
Process Chart: Collateral Damage Threat Severity Level

<1> **For Each Type of Vehicle Bomb:** For each type of vehicle bomb (moving and stationary) that a neighboring asset has a design basis threat for, do <2> through <7>. When done, return to Figure D-20.
<2> **Get Explosive Arc Radius 1 for High Level of Protection.** Use Table D-33 to determine the explosive arc radius of a vehicle bomb for high level of protection. Select the row that contains the appropriate design basis threat for the neighboring asset and obtain the explosive arc radius from the "H" column. Enter the explosive arc radius in column (d) or (h) of the Collateral Damage worksheet (see Appendix B for all worksheets) for a moving vehicle bomb or stationary vehicle bomb, respectively. Proceed to <3>.
<3> **Get Explosive Arc Radius 2 for High Level of Protection.** Use Table D-33 to determine the explosive arc radius of a vehicle bomb for low level of protection. Select the row that contains the appropriate design basis threat for the neighboring asset and obtain the explosive arc radius from the "L" column. Enter the explosive arc radius in column (e) or (i) of the Collateral Damage worksheet for a moving vehicle bomb or stationary vehicle bomb, respectively. Proceed to <4>.
<4> **Is Asset Within Explosive Arc Radius 1?** If an explosive arc radius in column (d) or (h) (for moving vehicle bomb or stationary vehicle bomb, respectively) is greater than the distance between facilities in column (b), proceed to <5>. Otherwise, proceed to <6>.
<5> **Enter High for Level of Protection.** Enter an "H" in column (f) or (j) (for moving vehicle bomb or stationary vehicle bomb, respectively) of the Collateral Damage worksheet. Proceed to <1> for next type of vehicle bomb.
<6> **Is Asset Within Explosive Arc Radius 2?** If an explosive arc radius in column (e) or (i) (for moving vehicle bomb or stationary vehicle bomb, respectively) is greater than the distance between facilities in column (b), proceed to <7>. Otherwise, proceed to <1> for next type of vehicle bomb.
<7> **Enter Low for Level of Protection.** Enter an "L" in column (f) or (j) (for moving vehicle bomb or stationary vehicle bomb, respectively) of the Collateral Damage worksheet. Proceed to <1> for next type of vehicle bomb.

**Figure D-24**
Description: Collateral Damage Threat Severity Level

**Table D-33**
Explosive Arc Radii for Collateral Damage (ft) Levels of Protection

| Neighboring Asset Threat Severity Level | Level of Protection | |
|---|---|---|
| | L | H |
| VH | 1500 (450 m) | 1000 (300 m) |
| H | 1200 (370 m) | 700 (210 m) |
| M | 800 (240 m) | 500 (150 m) |
| L | 500 (150 m) | 200 (60 m) |

# APPENDIX E

## EXAMPLES

E.1 Introduction. This appendix presents four planning, analysis, and selection examples.

a) Assets Procedure
b) Design Basis Threat Procedure
c) Level of Protection Procedure
d) System Analysis Procedure

Examples a), b), and c) cover risk analysis and example d) examines glazing system selection. The examples build upon one another to take an analyst from asset identification through cost estimation.

These are not complete examples. They focus on execution and understanding of the procedures contained in the handbook.

E.1.1 Action Tables. Each example is presented in table format with five columns. They include:

a) Action Number: References a specific action within the example.
b) Action: briefly describes the action taken by the analyst in executing a procedure.
c) Procedure: name of procedure from which action derives.
d) Figure Number: figure number of procedure.
e) Structure Number: identification number of structure from listed figure.

E.1.2 Repeat Action. To keep the examples to a reasonable length, some actions simply repeat a series of previous actions. These repeat actions are clearly spelled out, citing action reference numbers for the beginning and end of the repeat cycle and specifying what items to use.

E.2 Example Number 1: Assets Procedure. This example illustrates how an analyst would identify and categorize assets while doing a risk analysis. The example begins with structure

<1> of Figure D-2. Table E-2 presents the analyst's actions for this example.

E.2.1 Background Information. The following installation and facility characteristics are present at the site.

E.2.1.1 Installation Characteristics.

a) Geography. The installation is located OCONUS on a sea. It is outside of any city limits. The terrain is rolling and open.
b) Mission. The installation has two major tenants: a task force and a fleet air detachment. There are no sensitive activities or activities which would be controversial in the eyes of the surrounding community.

E.2.1.2 Facility Characteristics.

a) Site. The facility will be located about 120 feet from an installation boundary near one of the major entrances to the installation. The installation is fenced. The area outside the installation near the proposed site is farmland.
b) Function. The facility functions as an administration, communications, and headquarters building. Table E-1 describes the primary assets in the facility. Loss of the back up generator, a secondary asset, would have a minor impact on the communications equipment.
c) Construction. The facility will be permanent new construction. Concrete masonry unit (CMU) walls are a common construction for this installation.

**Table E-1**
Description of Primary Assets

| Asset Identification | Criticality to Mission | | Replacability | Relative Value |
|---|---|---|---|---|
| | Military | User's | | |
| Communication equipment | Minor | Moderate | 91 to 180 days | $60,000 |
| Office equipment | Negligible | Moderate | 31 to 90 days | $115,000 |
| High-ranking military personnel | Moderate | Mission-Critical | 91 to 180 days | 3 people |

| | | | | |
|---|---|---|---|---|
| Administration Staff | Minor | Significant | More than 180 days | 75 people |

**Table E-2**
Actions for Example Number 1

| Action Number | Action | Procedure | Figure Number | Structure Number |
|---|---|---|---|---|
| 1 | Do Assets procedure | Planning | Figure D-2 | <1> |
| 2 | For communications equipment: | Assets | Figure D-3 | <1> |
| 3 | Do Asset Identification procedure | | | <2> |
| 4 | Identify asset type. Asset is Primary. | Asset Identification | Figure D-5 | <1> |
| 5 | Is asset primary? Yes | | | <2> |
| 6 | Enter primary asset on DSC worksheet, use Table D-1. Asset is category C. See Figure E-1. | | | <3> |
| 7 | Enter primary asset on AVAL worksheet. See Figure E-2. | | | <4> |
| 8 | Repeat actions 2 through 7 for all remaining primary assets: office equipment, high-ranking military personnel, and administration staff. See Figure E-3 through Figure E-5. | | | |
| 9 | For back up generator: | Assets | Figure D-3 | <1> |
| 10 | Do Asset Identification procedure | | | <2> |
| 11 | Identify asset type. Asset is Secondary. | Asset Identification | Figure D-5 | <1> |
| 12 | Is asset primary? No. | | | <2> |
| 13 | Enter secondary asset on DSC worksheet. See Figure E-1. | | | <5> |
| 14 | Enter secondary asset on AVAL worksheet. See Figure E-6. | | | <6> |
| 15 | For communication equipment: | Assets | Figure D-3 | <3> |
| 16 | Do Primary Asset Value Assessment Procedure | | | <4> |
| 17 | Is primary asset information? No. | Primary Asset Value Assessment | Figure D-6 | <1> |
| 18 | Determine criticality to military mission, use Table D-3 and “minor”: Enter 1. | | | <3> |
| 19 | Determine Criticality to user’s mission, use Table D-4 and “moderate”: enter 2. | | | <4> |
| 20 | Determine Asset Replacability, use Table D-5 and “91 to 180 days”: enter 3. | | | <5> |
| 21 | Determine Relative Value, use Table D-9 and “$60,000”: enter 1. | | | <6> |
| 22 | Determine Resultant Value Rating. Sum rating factors, 7, and use Table D-11: enter L for Low. | | | <7> |
| 23 | Repeat actions 15 through 22 for all remaining primary assets: office equipment, high-ranking military personnel, and administration staff. See Figure E-3 through Figure E-5. | | | |
| 24 | For back up generator: | Assets | Figure D-3 | <5> |
| 25 | Do Secondary Asset Value Assessment procedure | | | <6> |
| 26 | Determine Impact on primary asset, use Table D-12 and “minor”: get L for Low. | Secondary Asset Value Assessment | Figure D-8 | <1> |
| 27 | Determine secondary asset resultant value, use Table D-13: enter L for low. See Figure E-6. | | | <2> |

**Glazing System Design Criteria Summary Worksheet**

1. Project/Building Identification: Example

2. Date: 30 Jan 96

| 4. Assets | Primary (P) or Secondary (S) (a) | Asset Category (b) | Asset Value Rating (c) | 3. Tactics: Moving Vehicle Bomb (a) DBT | Moving Vehicle Bomb (a) LOP | Stationary Vehicle Bomb (b) DBT | Stationary Vehicle Bomb (b) LOP | Exterior (c) DBT | Exterior (c) LOP | Ballistics (d) DBT | Ballistics (d) LOP | Forced Entry (e) DBT | Forced Entry (e) LOP |
|---|---|---|---|---|---|---|---|---|---|---|---|---|---|
| (1) Communication Equipment | P | C | M | | | | | | | | | | |
| (2) Office Equipment | P | I | L | | | | | | | | | | |
| (3) High-Ranking Military Personnel | P | J | M | | | | | | | | | | |
| (4) Adminitration Staff | P | K | M | | | | | | | | | | |
| (5) Back Up Generator | S | L | L | | | | | | | | | | |
| (6) | | | | | | | | | | | | | |
| (7) | | | | | | | | | | | | | |
| (8) | | | | | | | | | | | | | |
| (9) | | | | | | | | | | | | | |
| (10) | | | | | | | | | | | | | |
| (11) | | | | | | | | | | | | | |
| (12) | | | | | | | | | | | | | |

Legend: DBT - Design Basis Threat LOP - Level of Protection

**Figure E-1**
DCS Worksheet for Example Number 1

## Asset Value/Aggressor Likelihood Worksheet

1. Project/Building Identification: Example

2. Date: 7 Feb 96

| 3. Primary (P) or Secondary (S) | 4. Asset Category | 5. Value Rating Factors: Military Mission Criticality (a) | User Mission Criticality (b) | Replaceability (c) | Relative Value (d) | 6. Sum of Value Rating Factors | 7. Asset Value Rating |
|---|---|---|---|---|---|---|---|
| P | C | 1 | 2 | 3 | 4 | 10 | M |
| Table Reference | | D-3 | D-4 | D-5 | D-9 | | |

9. Asset Identification: Communication Equipment

| 8. Potential (X) | 10. Aggressors | 11. Likelihood Rating Factors: Asset Profile (a) | Usefulness (b) | Asset Availability (c) | Local Incidents (Past) (d) | Nearby Incidents (Past) (e) | Potential Incidents (f) | Accessibility (g) | Law Enforcement Effectiveness (h) | Deterrence (i) | Sum of Likelihood Rating Factors (j) | Likelihood Rating (k) |
|---|---|---|---|---|---|---|---|---|---|---|---|---|
| | Table Reference | D-14 | D-13 D-17 | D-18 | D-19 | D-20 | D-21 | D-25 | D-27 | D-28 | | |
| X | a. Unsophisticated Criminals | 1 | 4 | 4 | 1 | 1 | 1 | 6 | 6 | 4 | 28 | L |
| X | b. Sophisticated Criminals | 1 | 2 | 4 | 1 | 1 | 1 | 6 | 6 | 4 | 26 | L |
| X | c. Organized Criminal Groups | 1 | 1 | 4 | 1 | 1 | 1 | 6 | 6 | 4 | 25 | L |
| | d. Vandals | | | | | | | | | | | |
| | e. Extremist Protesters | | | | | | | | | | | |
| | f. CONUS Terrorists | | | | | | | | | | | |
| | g. OCONUS Terrorists | | | | | | | | | | | |
| | h. Paramilitary OCONUS Terrorists | | | | | | | | | | | |
| X | i. Saboteurs | 3 | 2 | 4 | 1 | 1 | 2 | 6 | 6 | 4 | 29 | L |
| | j. Spies | | | | | | | | | | | |

**Figure E-2**
AVAL Worksheet for Communications Equipment

## Asset Value/Aggressor Likelihood Worksheet

1. Project/Building Identification: Example

2. Date: 7 Feb 96

| 3. Primary (P) or Secondary (S) | 4. Asset Category | 5. Value Rating Factors: Military Mission Criticality (a) | User Mission Criticality (b) | Replaceability (c) | Relative Value (d) | 6. Sum of Value Rating Factors | 7. Asset Value Rating |
|---|---|---|---|---|---|---|---|
| P | I | 0 | 2 | 2 | 2 | 6 | L |
| Table Reference | | D-3 | D-4 | D-5 | D-9 | | |

9. Asset Identification: Office Equipment

| 8. Potential (X) | 10. Aggressors | 11. Likelihood Rating Factors: Asset Profile (a) | Usefulness (b) | Asset Availability (c) | Local Incidents (Past) (d) | Nearby Incidents (Past) (e) | Potential Incidents (f) | Accessibility (g) | Law Enforcement Effectiveness (h) | Deterrence (i) | Sum of Likelihood Rating Factors (j) | Likelihood Rating (k) |
|---|---|---|---|---|---|---|---|---|---|---|---|---|
| | Table Reference | D-14 | D-13 | D-18 | D-19 | D-20 | D-21 | D-25 | D-27 | D-28 | | |
| X | a. Unsophisticated Criminals | 4 | 5 | 1 | 2 | 3 | 3 | 8 | 6 | 6 | 38 | M |
| X | b. Sophisticated Criminals | 4 | 3 | 1 | 1 | 2 | 3 | 8 | 6 | 6 | 34 | M |
| X | c. Organized Criminal Groups | 4 | 2 | 1 | 1 | 1 | 1 | 8 | 6 | 4 | 28 | L |
| | d. Vandals | | | | | | | | | | | |
| | e. Extremist Protesters | | | | | | | | | | | |
| | f. CONUS Terrorists | | | | | | | | | | | |
| | g. OCONUS Terrorists | | | | | | | | | | | |
| | h. Paramilitary OCONUS Terrorists | | | | | | | | | | | |
| | i. Saboteurs | | | | | | | | | | | |
| | j. Spies | | | | | | | | | | | |

**Figure E-3**
AVAL Worksheet for Office Equipment

**Asset Value/Aggressor Likelihood Worksheet**

1. Project/Building Identification: Example

2. Date: 8 Feb 96

| 3. Primary (P) or Secondary (S) | 4. Asset Category | 5. Value Rating Factors | | | | 6. Sum of Value Rating Factors | 7. Asset Value Rating |
|---|---|---|---|---|---|---|---|
| | | a. Military Mission Criticality | b. User Mission Criticality | c. Replaceability | d. Relative Value | | |
| P | J | 2 | 4 | 3 | 2 | 11 | M |
| Table Reference | | D-3 | D-4 | D-5 | D-10 | | |

9. Asset Identification: High-Ranking Military Personnel

| 8. Potential (X) | 10. Aggressors | 11. Likelihood Rating Factors | | | | | | | | | | Sum of Likelihood Rating Factors (j) | Likelihood Rating (k) |
|---|---|---|---|---|---|---|---|---|---|---|---|---|---|
| | | a. Asset Profile | b. Usefulness | c. Asset Availability | d. Local Incidents (Past) | e. Nearby Incidents (Past) | f. Potential Incidents | g. Accessibility | h. Law Enforcement Effectiveness | i. Deterrence | | | |
| | Table Reference | D-14 | D-16 D-17 | D-18 | D-19 | D-20 | D-21 | D-26 | D-27 | D-28 | | | |
| | a. Unsophisticated Criminals | | | | | | | | | | | | |
| | b. Sophisticated Criminals | | | | | | | | | | | | |
| | c. Organized Criminal Groups | | | | | | | | | | | | |
| | d. Vandals | | | | | | | | | | | | |
| X | e. Extremist Protesters | 2 | 3 | 4 | 1 | 1 | 1 | 4 | 6 | 4 | | 26 | L |
| X | f. CONUS Terrorists | | | | | | | | | | | | |
| X | g. OCONUS Terrorists | 3 | 4 | 4 | 1 | 2 | 3 | 4 | 6 | 4 | | 31 | M |
| X | h. Paramilitary OCONUS Terrorists | 3 | 4 | 4 | 1 | 1 | 2 | 4 | 6 | 6 | | 31 | M |
| X | i. Saboteurs | 3 | 1 | 4 | 1 | 1 | 2 | 4 | 6 | 6 | | 28 | L |
| | j. Spies | | | | | | | | | | | | |

**Figure E-4**
AVAL Worksheet for High-Ranking Military Personnel

**Asset Value/Aggressor Likelihood Worksheet**

1. Project/Building Identification: Example

2. Date: 8 Feb 96

| 3. Primary (P) or Secondary (S) | 4. Asset Category | 5. Value Rating Factors: Military Mission Criticality (a) | 5. Value Rating Factors: User Mission Criticality (b) | 5. Value Rating Factors: Replaceability (c) | 5. Value Rating Factors: Relative Value (d) | 6. Sum of Value Rating Factors | 7. Asset Value Rating | 8. Potential (X) |
|---|---|---|---|---|---|---|---|---|
| P | K | 1 | 3 | 4 | 4 | 12 | M | |
| Table Reference | | D-3 | D-4 | D-5 | D-10 | | | |

9. Asset Identification: Administration Staff

| 10. Aggressors | 11. Likelihood Rating Factors: Asset Profile (a) | Usefulness (b) | Asset Availability (c) | Local Incidents (Past) (d) | Nearby Incidents (Past) (e) | Potential Incidents (f) | Accessibility (g) | Law Enforcement Effectiveness (h) | Deterrence (i) | Sum of Likelihood Rating Factors (j) | Likelihood Rating (k) |
|---|---|---|---|---|---|---|---|---|---|---|---|
| Table Reference | D-14 | D-17 | D-18 | D-19 | D-20 | D-21 | D-25 | D-27 | D-28 | | |
| a. Unsophisticated Criminals | | | | | | | | | | | |
| b. Sophisticated Criminals | | | | | | | | | | | |
| c. Organized Criminal Groups | | | | | | | | | | | |
| d. Vandals | | | | | | | | | | | |
| e. Extremist Protesters | 5 | 3 | 2 | 2 | 1 | 3 | 4 | 6 | 3 | 29 | L |
| f. CONUS Terrorists | | | | | | | | | | | |
| g. OCONUS Terrorists | 5 | 2 | 2 | 1 | 2 | 3 | 4 | 6 | 3 | 28 | L |
| h. Paramilitary OCONUS Terrorists | 5 | 2 | 2 | 1 | 1 | 2 | 4 | 6 | 3 | 26 | L |
| i. Saboteurs | | | | | | | | | | | |
| j. Spies | | | | | | | | | | | |

**Figure E-5**
AVAL Worksheet for Administration Staff

## Asset Value/Aggressor Likelihood Worksheet

1. Project/Building Identification: Example

2. Date: 8 Feb 96

| 3. Primary (P) or Secondary (S) | 4. Asset Category | 5. Value Rating Factors: Military Mission Criticality (a) | User Mission Criticality (b) | Replaceability (c) | Relative Value (d) | 6. Sum of Value Rating Factors | 7. Asset Value Rating |
|---|---|---|---|---|---|---|---|
| S | L | | | | | | L |
| Table Reference | | | | | | | |

9. Asset Identification

Back Up Generator (S)

(Communication Equipment)

| 8. Potential (X) | 10. Aggressors | 11. Likelihood Rating Factors: Asset Profile (a) | Usefulness (b) | Asset Availability (c) | Local Incidents (Past) (d) | Nearby Incidents (Past) (e) | Potential Incidents (f) | Accessibility (g) | Law Enforcement Effectiveness (h) | Deterrence (i) | Sum of Likelihood Rating Factors (j) | Likelihood Rating (k) |
|---|---|---|---|---|---|---|---|---|---|---|---|---|
| | Table Reference | D-14 | D-16 | D-18 | D-19 | D-20 | D-21 | D-26 | D-27 | D-28 | | |
| | a. Unsophisticated Criminals | | | | | | | | | | | |
| | b. Sophisticated Criminals | | | | | | | | | | | |
| | c. Organized Criminal Groups | | | | | | | | | | | |
| X | d. Vandals | | | | | | | | | | | |
| X | e. Extremist Protesters | | | | | | | | | | | |
| X | f. CONUS Terrorists | | | | | | | | | | | |
| X | g. OCONUS Terrorists | | | | | | | | | | | |
| X | h. Paramilitary OCONUS Terrorists | | | | | | | | | | | |
| X | i. Saboteurs | 2 | 2 | 4 | 1 | 1 | 1 | 8 | 6 | 3 | 28 | L |
| | j. Spies | | | | | | | | | | | |

**Figure E-6**
AVAL Worksheet for Back Up Generator

E.3 Example Number 2: Design Basis Threat Procedure. This example illustrates how an analyst would produce a design basis threat for the assets presented in Example No. 1. The example begins with structure number 2 of Figure D-2. Table E-3 and Table E-4 present the analyst's actions for this example.

E.3.1 Background Information. Use the following information to compute likelihood ratings for the assets under consideration.

E.3.1.1 General. Law enforcement is moderately effective.

E.3.1.2 Communications Equipment. This asset has a limited availability on the installation and is not available off the installation. It is operated 24 hours per day. Communication equipment is the target of two types of aggressors: criminals and saboteurs.

I. Criminals
   A. Very low visibility within the facility.
   B. No incidents of theft on this installation or at nearby installations.
   C. It is unlikely that there will be future incidents.
   D. Would perceive a low possibility of success and escape.

II. Saboteurs
   A. Existence of equipment is probably known.
   B. Has moderate usefulness.
   C. No incidents of sabotage on this installation or at nearby installations.
   D. It is unlikely that there will be future incidents.
   E. Would perceive a low possibility of success and escape.

E.3.1.3 Office Equipment. This asset has high visibility. Asset is widely available off the installation. Office equipment is the target of three types of aggressors: unsophisticated criminals, sophisticated criminals, and organized criminal groups.

I. Unsophisticated Criminals
   A. One incident of theft on this installation.
   B. Two incidents of thefts at nearby installations.

C. It is probable that there will be future incidents.
D. Would perceive a medium possibility of success and escape.

II. Sophisticated Criminals
A. No incidents of theft on this installation.
B. One incident of theft at a nearby installation.
C. It is probable that there will be future incidents.
D. Would perceive a medium possibility of success and escape.

III. Organized Criminal Groups
A. No incidents of theft on this installation or at nearby installations.
B. It is unlikely that there will be future incidents.
C. Would perceive a low possibility of success and escape.

E.3.1.4 High-Ranking Military Personnel. These personnel have a limited availability on the installation and are not available off the installation. High-ranking military personnel are targets of three types of aggressors: extremist protesters, terrorists, and saboteurs.

I. Extremist Protesters
A. Existence of high-ranking military personnel is probably not well known.
B. Likely to believe personnel loss would result in significant publicity.
C. No incidents of attack on this installation or nearby installations.
D. It is unlikely that there will be future incidents.
E. Would perceive a low possibility of success and escape.

II. Terrorists
A. Existence of high-ranking military personnel is probably known.
B. Likely to believe personnel loss would result in considerable publicity.
C. No incidents of attack on this installation.
D. OCONUS

1. One incident of attack at a nearby installation.
2. It is probable that there will be future incidents.
3. Would perceive a low possibility of success and escape.

E. Paramilitary OCONUS
1. No incidents of attack at nearby installations.
2. There is some possibility that there will be a future incident.
3. Would perceive a medium possibility of success and escape.

III. Saboteurs
A. Existence of high-ranking military personnel is probably known.
B. Killing personnel is of minor usefulness.
C. No incidents of attack on this installation or nearby installations.
D. There is some possibility that there will be a future incident.
E. Would perceive a medium possibility of success and escape.

E.3.1.5 Administration Staff. Existence of staff personnel would be obvious to an aggressor. These personnel have limited availability off the installation. Staff personnel are targets of two types of aggressors: terrorists and protesters.

I. Extremist Protesters
   A. Likely to believe personnel loss would result in significant publicity.
   B. One incident of attack on this installation.
   C. No incident of attack at nearby installations.
   D. It is probable that there will be future incidents.
   E. Would perceive a medium possibility of success and escape.

II. Terrorists
   A. Likely to believe personnel loss would result in moderate publicity.
   B. No incidents of attack on this installation.
   C. Would perceive a medium possibility of success and escape.
   D. OCONUS
      1. One incident of attack at a nearby installation.
      2. It is probable that there will be future incidents.
   E. Paramilitary OCONUS
      1. No incidents of attack at nearby installations.
      2. There is some possibility that there will be a future incident.

E.3.1.6 Back Up Generator. A back up generator for communication equipment would be the target of one type of aggressor: saboteurs. A back up generator would have low visibility and be of moderate usefulness. There are no incidents of attack on this installation or at nearby installations. It is unlikely that there will be any future incidents. A saboteur would perceive a medium possibility of success and escape.

**Table E-3**
Actions for Example Number 2

| Action Number | Action | Procedure | Figure Number | Structure Number |
|---|---|---|---|---|
| 1 | Do Design Basis Threat procedure | Planning | Figure D-2 | <2> |
| 2 | For communications equipment: | Design Basis | Figure D-9 | <1> |

| | | | | |
|---|---|---|---|---|
| 3 | Do Identification of Likely Aggressors procedure | Threat | | <2> |
| 4 | Is asset primary? Yes | Identification of Likely Aggressors | Figure D-10 | <1> |
| 5 | Identify likely aggressors, use Figure D-11. See Figure E-2. | | | <2> |
| 6 | Do Likelihood of Aggression procedure | Design Basis Threat | Figure D-9 | <1> |
| 7 | For unsophisticated criminals: | Likelihood of Aggression | Figure D-12 | <1> |
| 8 | Determine asset profile, use Table D-14 and “very low visibility”: enter 1. | | | <2> |
| 9 | Determine level of usefulness, use Figure D-13 and $60,000: enter 4. | | | <3> |
| 10 | Evaluate asset availability, use Table D-18 and “limited availability on installation, but is not available off installation”: enter 4. | | | <4> |
| 11 | Evaluate local incidents in past, use Table D-19, and “no incidents”: enter 1. | | | <5> |
| 12 | Evaluate nearby incidents in past, use Table D-20 and “no incidents”: enter 1. | | | <6> |
| 13 | Determine potential for future incidents, use Table D-21 and “unlikely possibility”: enter 1. | | | <7> |
| 14 | Determine asset accessibility, use Table D-25 and “asset is located within one protective layer with on-site guard”: enter 6. | | | <8> |
| 15 | Evaluate effectiveness of law enforcement, use Table **D-27** and “moderately effective”: enter 6. | | | <9> |
| 16 | Evaluate deterrence, use Table D-28 and “low possibility of success”: enter 4. | | | <10> |
| 17 | Compute likelihood rating, use Table **D-29**. Factors add up to 30. For 30, the likelihood rating is medium. Enter M. | | | <11> |
| 18 | Repeat actions 2 through 17 for all remaining aggressors: sophisticated criminals, organized criminal groups, and saboteurs | | | |

**Table E-4**
Actions for Example Number 2, Continued

| Action Number | Action | Procedure | Figure Number | Structure Number |
|---|---|---|---|---|
| 19 | Do Applicable Tactics and Severity Levels procedure | Design Basis Threat | Figure D-9 | <4> |
| 20 | Create tactic and threat severity level worksheet for asset. See Figure E-7. | Applicable Tactics | Figure D-14 | <1> |

| | | | | |
|---|---|---|---|---|
| 21 | Transfer aggressors to worksheet. | and Severity Levels | | <2> |
| 22 | Indicate Applicable Tactics, use Figure D-16. | | | <3> |
| 23 | For unsophisticated criminals: | | | <4> |
| 24 | For exterior tactic: | | | <5> |
| 25 | Check for severity level entry, use Figure D-17. There is no entry. | | | <6> |
| 26 | Is there a severity level entry? No. | | | <7> |
| 27 | For ballistic tactic: | | | <4> |
| 28 | Check for severity level entry, use Figure D-17. There is no entry. | | | <6> |
| 29 | Is there a severity level entry? No. | | | <7> |
| 30 | For forced entry tactic: | | | <4> |
| 31 | Check for severity level entry, use Figure D-17. There is an entry. | | | <6> |
| 32 | Is there a severity level entry? Yes. | | | <7> |
| 33 | Determine appropriate threat severity level, use Figure D-17. Threat severity level is L. Enter L. | | | <8> |
| 34 | Repeat actions 24 through 33 for all remaining aggressors: sophisticated criminals, organized criminal groups, and saboteurs. | | | |
| 35 | Do Tactics Consolidation procedure. | Design Basis Threat | Figure D-9 | <5> |
| 36 | For exterior tactic: | Tactics Consolidation | Figure D-18 | <1> |
| 37 | Identify highest threat severity level: M for medium. | | | <2> |
| 38 | Enter design basis threat severity level: enter M. | | | <3> |
| 39 | Transfer threat severity level: enter M. See Figure E-8 | | | <4> |
| 40 | Determine design parameters, use Table D-30: 50 lb. TNT. | | | <5> |
| 41 | Repeat actions 37 through 40 for all remaining tactics: ballistics and forced entry. | | | |
| 42 | Repeat actions 3 through 41 for all remaining assets: office equipment, high-ranking military personnel, administration staff and back up generator. See Figure E-9 through Figure E-12. | | | |

**Glazing System Tactic and Threat Severity Level Worksheet**

| 1. Project/Building Identification | 2. Asset Identification | 3. Date |
|---|---|---|
| Example No. 2 | Communication Equipment | 8 Feb 96 |

| 4. Tactics / 5. Aggressor | Applicable Aggressors (X) | Moving Vehicle Bomb (a) | Stationary Vehicle Bomb (b) | Exterior (c) | Ballistics (d) | Forced Entry (e) |
|---|---|---|---|---|---|---|
| Applicable Tactics (X) | | | | X | X | X |
| a. Unsophisticated Criminals | X | | | | | L |
| b. Sophisticated Criminals | X | | | | | L |
| c. Organized Criminal Groups | X | | | | | L |
| d. Vandals/Activists | | | | | | |
| e. Extremist Protesters | | | | | | |
| f. CONUS Terrorists | | | | | | |
| g. OCONUS Terrorists | | | | | | |
| h. Paramilitary OCONUS Terrorists | | | | | | |
| i. Saboteurs | X | | | M | M | H |
| j. Spies | | | | | | |
| k. Design Basis Threat | | | | M | M | H |

**Figure E-7**
TTSL Worksheet for Communications Equipment

**Glazing System Design Criteria Summary Worksheet**

1. Project/Building Identification: Example

2. Date: 30 Jan 96

| 4. Assets | Primary (P) or Secondary (S) (a) | Asset Category (b) | Asset Value Rating (c) | 3. Tactics: Moving Vehicle Bomb (a) DBT | Moving Vehicle Bomb (a) LOP | Stationary Vehicle Bomb (b) DBT | Stationary Vehicle Bomb (b) LOP | Exterior (c) DBT | Exterior (c) LOP | Ballistics (d) DBT | Ballistics (d) LOP | Forced Entry (e) DBT | Forced Entry (e) LOP |
|---|---|---|---|---|---|---|---|---|---|---|---|---|---|
| (1) Communication Equipment | P | C | M | | | | | M | | M | | H | |
| (2) Office Equipment | P | I | L | | | | | | | | | M | |
| (3) High-Ranking Military Personnel | P | J | M | M | | M | | H | | H | | H | |
| (4) Adminitration Staff | P | K | M | L | | L | | M | | M | | M | |
| (5) Back Up Generator | S | L | L | | | | | M | | M | | H | |
| (6) | | | | | | | | | | | | | |
| (7) | | | | | | | | | | | | | |
| (8) | | | | | | | | | | | | | |
| (9) | | | | | | | | | | | | | |
| (10) | | | | | | | | | | | | | |
| (11) | | | | | | | | | | | | | |
| (12) | | | | | | | | | | | | | |

Legend: DBT - Design Basis Threat LOP - Level of Protection

**Figure E-8**
DCS Worksheet for Example Number 2

## Glazing System Tactic and Threat Severity Level Worksheet

| 1. Project/Building Identification | 2. Asset Identification | 3. Date |
|---|---|---|
| Example No. 2 | Office Equipment | 8 Feb 96 |

| 4. Tactics / 5. Aggressor | Applicable Aggressors (X) | Moving Vehicle Bomb (a) | Stationary Vehicle Bomb (b) | Exterior (c) | Ballistics (d) | Forced Entry (e) |
|---|---|---|---|---|---|---|
| Applicable Tactics (X) | | | | | | X |
| a. Unsophisticated Criminals | X | | | | | L |
| b. Sophisticated Criminals | X | | | | | M |
| c. Organized Criminal Groups | X | | | | | L |
| d. Vandals/Activists | | | | | | |
| e. Extremist Protesters | | | | | | |
| f. CONUS Terrorists | | | | | | |
| g. OCONUS Terrorists | | | | | | |
| h. Paramilitary OCONUS Terrorists | | | | | | |
| i. Saboteurs | | | | | | |
| j. Spies | | | | | | |
| k. Design Basis Threat | | | | | | M |

**Figure E-9**
TTSL Worksheet for Office Equipment

**Glazing System Tactic and Threat Severity Level Worksheet**

| 1. Project/Building Identification | 2. Asset Identification | 3. Date |
|---|---|---|
| Example No. 2 | High-ranking Military Personnel | 8 Feb 96 |

| 4. Tactics / 5. Aggressor | Applicable Aggressors (X) | Moving Vehicle Bomb (a) | Stationary Vehicle Bomb (b) | Exterior (c) | Ballistics (d) | Forced Entry (e) |
|---|---|---|---|---|---|---|
| Applicable Tactics (X) | | X | X | X | X | X |
| a. Unsophisticated Criminals | | | | | | |
| b. Sophisticated Criminals | | | | | | |
| c. Organized Criminal Groups | | | | | | |
| d. Vandals/Activists | | | | | | |
| e. Extremist Protesters | X | | | M | M | L |
| f. CONUS Terrorists | | | | | | |
| g. OCONUS Terrorists | X | | M | H | H | M |
| h. Paramilitary OCONUS Terrorists | X | M | M | H | H | H |
| i. Saboteurs | X | | | M | M | H |
| j. Spies | | | | | | |
| k. Design Basis Threat | | M | M | H | H | H |

**Figure E-10**
TTSL Worksheet for High-Ranking Military Personnel

**Glazing System Tactic and Threat Severity Level Worksheet**

| 1. Project/Building Identification | 2. Asset Identification | 3. Date |
|---|---|---|
| Example No. 2 | Administration Staff | 8 Feb 96 |

| 4. Tactics / 5. Aggressor | Applicable Aggressors (X) | Moving Vehicle Bomb (a) | Stationary Vehicle Bomb (b) | Exterior (c) | Ballistics (d) | Forced Entry (e) |
|---|---|---|---|---|---|---|
| Applicable Tactics (X) | | X | X | X | X | X |
| a. Unsophisticated Criminals | | | | | | |
| b. Sophisticated Criminals | | | | | | |
| c. Organized Criminal Groups | | | | | | |
| d. Vandals/Activists | | | | | | |
| e. Extremist Protesters | X | | | M | M | L |
| f. CONUS Terrorists | | | | | | |
| g. OCONUS Terrorists | X | | L | M | M | L |
| h. Paramilitary OCONUS Terrorists | X | L | L | M | M | M |
| i. Saboteurs | | | | | | |
| j. Spies | | | | | | |
| k. Design Basis Threat | | L | L | M | M | M |

**Figure E-11**
TTSL Worksheet for Administration Staff

## Glazing System Tactic and Threat Severity Level Worksheet

| 1. Project/Building Identification | 2. Asset Identification | 3. Date |
|---|---|---|
| Example No. 2 | Back Up Generator (S) | 8 Feb 96 |

| 4. Tactics / 5. Aggressor | Applicable Aggressors (X) | Moving Vehicle Bomb (a) | Stationary Vehicle Bomb (b) | Exterior (c) | Ballistics (d) | Forced Entry (e) |
|---|---|---|---|---|---|---|
| Applicable Tactics (X) | | | X | X | X | X |
| a. Unsophisticated Criminals | | | | | | |
| b. Sophisticated Criminals | | | | | | |
| c. Organized Criminal Groups | | | | | | |
| d. Vandals/Activists | | | | | | |
| e. Extremist Protesters | | | | | | |
| f. CONUS Terrorists | | | | | | |
| g. OCONUS Terrorists | | | | | | |
| h. Paramilitary OCONUS Terrorists | | | | | | |
| i. Saboteurs | X | | | M | M | H |
| j. Spies | | | | | | |
| k. Design Basis Threat | | | | M | M | H |

**Figure E-12**
TTSL Worksheet for Back Up Generator

E.4 Example Number 3: Level of Protection. This example illustrates how an analyst would determine the level of protection for assets presented in Example No. 2. The example begins with structure <3> of Figure D-2. Table E-5 presents the analyst's actions for this example.

**Table E-5**
Actions for Example Number 3

| Action Number | Action | Procedure | Figure Number | Structure Number |
|---|---|---|---|---|
| 1 | Do Level of Protection procedure | Planning | Figure D-2 | <2> |
| 2 | For communications equipment: | Level of Protection | Figure D-19 | <1> |
| 3 | For Exterior tactic: | | | <2> |
| 4 | Select level of protection, use Table D-31: get L for Low. | | | <3> |
| 5 | Enter level of protection on worksheet: enter L. See Figure E-13. | | | <4> |
| 6 | Is level of protection too high or too low? No. | | | <5> |
| 7 | Repeat actions 4 through 6 for all remaining tactics: ballistics and forced entry. | | | |
| 8 | Do Collateral Damage Assessment | Level of Protection | Figure D-19 | <7> |
| 9 | Are bomb tactics a threat? Yes. | Collateral Damage Assessment | Figure D-21 | <1> |
| 10 | Repeat actions 2 through 9 for all remaining assets: office equipment, high-ranking military personnel, administration staff and back up generator. | | | |

**Glazing System Design Criteria Summary Worksheet**

1. Project/Building Identification: Example

2. Date: 30 Jan 96

| 4. Assets | Primary (P) or Secondary (S) (a) | Asset Category (b) | Asset Value (c) | 3. Tactics: Moving Vehicle Bomb (a) DBT | Moving Vehicle Bomb (a) LOP | Stationary Vehicle Bomb (b) DBT | Stationary Vehicle Bomb (b) LOP | Exterior (c) DBT | Exterior (c) LOP | Ballistics (d) DBT | Ballistics (d) LOP | Forced Entry (e) DBT | Forced Entry (e) LOP |
|---|---|---|---|---|---|---|---|---|---|---|---|---|---|
| (1) Communication Equipment | P | C | M | | | | | M | H | M | H | H | M |
| (2) Office Equipment | P | I | L | | | | | | | | | M | L |
| (3) High-ranking Military Personnel | P | J | M | M | H | M | H | H | H | H | H | H | M |
| (4) Administration Staff | P | K | M | L | H | L | H | M | H | M | H | M | M |
| (5) Back Up Generator | S | L | L | | | | | M | L | M | H | H | L |
| (6) | | | | | | | | | | | | | |
| (7) | | | | | | | | | | | | | |
| (8) | | | | | | | | | | | | | |
| (9) | | | | | | | | | | | | | |
| (10) | | | | | | | | | | | | | |
| (11) | | | | | | | | | | | | | |
| (12) | | | | | | | | | | | | | |

Legend: DBT - Design Basis Threat LOP - Level of Protection

**Figure E-13**
DCS Worksheet for Example Number 3

E.5 Example Number 4: System Analysis. This example illustrates how an analyst would select a glazing system after determining the design basis threat in Example No. 2 and levels of protection in Example No. 3. The example begins with structure number 1 of Figure 5. Table E-8 through Table E-16 present the analyst's actions for this example.

E.5.1 Background Information. Communications equipment is the asset to be protected. The following information applies to the analysis.

E.5.1.1 Windows. The communications equipment is housed in a room with two windows. Center-line of the windows is about 5 feet (1.5 m) above the ground. Each window is roughly 2 feet (0.61 m) high by 3 feet (0.91 m) wide. Glazing height and width are 22 inches (0.56 m) and 34 inches (0.86) from gasket center-line to gasket center-line, respectively.

E.5.1.2 Exterior Attack Tactic. An aggressor can throw a bomb directly at the communications equipment room windows from outside the fence line. Standoff distance for an attack is 60 feet (20 m).

E.5.1.3 Blast Design. Table E-6 presents the results of a blast design for window frame, anchorage, and wall.

**Table E-6**
Blast Design Properties and Results

| Property | Result |
|---|---|
| Frame Material | Steel |
| Frame Thickness | 1/4 inch (6 mm) |
| Removable Stop Thickness | 3/16 inch (5 mm) |
| Anchor Bolt Type | Expansion |
| Anchor Bolt Diameter | 3/8 inch (9 mm) |
| Anchor Bolt Embedment | 3 inches (75 mm) |
| Maximum Anchor Bolt Spacing: Frame Corner to Bolt | 9 inches (225 mm) |
| Maximum Anchor Bolt Spacing: Between Adjacent Bolts | 12 inches (300 mm) |
| Removable Stop Anchor Bolt Type | Shouldered |
| Number of Removable Stop Anchor Bolts per Side | 3 inches (75 mm) |
| Removable Stop Anchor Bolt Spacing: Frame Corner to Bolt | 8 inches (200 mm) |
| Removable Stop Anchor Bolt Spacing: Between Adjacent Bolts | 16 inches (400 mm) |
| Wall Thickness | 6 inches (150 mm) |

E.5.1.4 Environment. The windows are exposed to high humidity and temperatures as low as 20°F.

E.5.1.5 Requirements. The command will accept risks incurred when lowering forced entry design basis threat from high to medium.

E.5.1.6 Cost Estimate. Table E-7 presents cost data based on local material and labor costs and life of glazings.

**Table E-7**
Cost Data

| Cost Type | Data |
|---|---|
| Preparation of Wall for Anchorage | $100/window |
| Cost of Aligning and Anchoring Frame | $125/frame |
| Base Unit Cost for Cross-Section | $0.40/square foot |
| Base Unit Cost for Frame | $29/linear foot |
| Life Cycle Cost Factor for Glass-Clad Polycarbonate | 1.9 |
| Life Cycle Cost Factor for Laminated Polycarbonate | 2.9 |
| Life Cycle Cost Factor for Air-Gap with Polycarbonate | 1.5 |

**Table E-8**
Actions for Example Number 4

| Action Number | Action | Procedure | Figure Number | Structure Number |
|---|---|---|---|---|
| 1 | Selection Application? Yes. | System Analysis | Figure 5 | <1> |
| 2 | Do System Selection procedure | | | <2> |
| 3 | Do Selection Attack Analyses procedure | System Selection | Figure 6 | <1> |
| 4 | Do ballistics attack analysis? Yes. | Selection Attack Analyses | Figure 8 | <1> |
| 5 | Do Ballistic Resistant Glazing Selection procedure | | | <2> |
| 6 | Select using threat severity level: Medium. | Ballistic Resistant Glazing Selection | Figure 20 | <1> |
| 7 | Get cross-section to protect against medium threat severity level. Use Table 9. See Figure E-14, | | | <3> |
| 8 | Get ballistic resistant frame thicknesses. Use Table 6. See Figure E-15. | | | <6> |
| 9 | Get ballistic resistant wall thickness. Use Table 7. See Figure E-16. | | | <7> |
| 10 | Do forced entry attack analysis? Yes. | Selection Attack Analysis | Figure 8 | <3> |
| 11 | Do Forced Entry Resistant Glazing Selection procedure | | | <4> |
| 12 | Required level of protection? Medium. | Forced Entry Resistant Glazing Selection | Figure 26 | <1> |
| 13 | Use threat level severity level to select analysis: High. | | | <2> |
| 14 | Mark glazing system does not meet design requirements. See Figure E-14. | | | <3> |
| 15 | Do bomb attack analysis? Yes. | Selection Attack Analysis | Figure 8 | <5> |
| 16 | Do Blast Resistant Glazing Selection procedure. | | | <6> |
| 17 | For exterior tactic: | Blast Resistant Glazing Selection | Figure 24 | <1> |
| 18 | Required level of protection? High. | | | <2> |
| 19 | Do Safevue Selection Analysis procedure | | | <4> |
| 20 | Create safevue data entry worksheet. See Figure E-17. | Safevue Selection Analysis | Figure C-13 | <1> |
| 21 | Do Safevue Start Up procedure | | | <2> |

**Cross-section Selection Worksheet**

| 1. Project/Building Identification | 2. Asset Identification | 3. Date |
|---|---|---|
| Example Number 4 | Communications Equipment | 12 Feb 96 |

| *Cross-Section Type* | *Component* | *Tactic* | | | | | Resolved Thickness |
|---|---|---|---|---|---|---|---|
| | | Moving Vehicle Bomb *(a)* | Stationary Vehicle Bomb *(b)* | Exterior *(c)* | Ballistics *(d)* | Forced Entry *(e)* | *(f)* |
| Monolithic Glass | Total Thickness | | | | | | |
| Laminated Glass | Total Thickness | | | 3/8" AG | 1-3/4" AG | | |
| Monolithic Polycarbonate | Total Thickness | | | | | | |
| Laminated Polycarbonate | Total Thickness | | | 1/4" | 1-1/4" | | |
| Glass-Clad Polycarbonate | Total Thickness | | | 1/4" | 1" | | |
| | Polycarbonate Thickness | | | 1/8" | 1/2" | | |
| | Glass Thickness | | | 1/8" CSG | 3/8" CSG | | |
| Extruded Ionomer | Total Thickness | | | | | | |
| | Ionomer Thickness | | | | | | |
| | Glass Thickness | | | | | | |
| Glass-Air Gap | Total Thickness | | | | | | |
| | Glass Thickness | | | | | | |
| Glass-Air Gap with Polycarbonate | Total Thickness | | | 3/4" | 1-1/4" | | |
| | Polycarbonate Thickness | | | 1/8" | 1/2" | | |
| | Glass Thickness | | | 1/8" SG | 1/2" SG | | |

Does Glazing Cross-Section Meet Design Requirements? ☐ Yes ☒ No

**Figure E-14**
CSS Worksheet Before Revising Requirements

| Frame Selection Worksheet | | | | | | |
|---|---|---|---|---|---|---|
| *Frame Properties* | *Tactics* | | | | | Resolved Specifications |
| | Moving Vehicle Bomb *(a)* | Stationary Vehicle Bomb *(b)* | Exterior *(c)* | Ballistics *(d)* | Forced Entry *(e)* | *(f)* |
| Frame Material | | | steel | steel | | steel |
| Frame Thickness | | | 1/4" | 1/4" | | 1/4" |
| Removable Stop Thickness | | | 3/16" | 3/16" | | 3/16" |
| Bite Depth | | | 7/8" | | | 7/8" |
| Glazing Rabbet Depth | | | | | | |
| Does Frame Meet Design Requirements? ☐ Yes ☐ No | | | | | | |

**Figure E-15**
FS Worksheet Before Revising Requirements

| Wall Selection Worksheet | | | | | | |
|---|---|---|---|---|---|---|
| *Wall Type* | *Tactic* | | | | | Resolved Thickness |
| | Moving Vehicle Bomb | Stationary Vehicle Bomb | Exterior | Ballistics | Forced Entry | |
| | *(a)* | *(b)* | *(c)* | *(d)* | *(e)* | *(f)* |
| Wood Frame | | | | | | |
| Brick | | | | | | |
| Reinforced Concrete Block | | | 6" | 4" | | 6" |
| Reinforced Concrete | | | | | | |
| Does Wall Meet Design Requirements? ☐ Yes ☐ No | | | | | | |

**Figure E-16**
WS Worksheet Before Revising Requirements

## Safevue Data Entry Worksheet

1. Project/Building Identification: *Example Number 4*

2. Date: *12 Feb 96*

| Asset Identification | Glazing Data Entry | | | Explosives Data Entry | | | | | | | Algorithm Data Entry | | |
|---|---|---|---|---|---|---|---|---|---|---|---|---|---|
| | Height (in) | Width (in) | Bite (in) | Horizontal Offset (ft) | Horizontal Setback (ft) | Vertical Elevation (ft) | Charge Shape (H or S) | Explosives Type | TNT Equivalent Weight Factor | Explosive Weight (lb) | Critical Damping (%) | Number of Integration Time Steps | Probability of Failure |
| *(a)* | *(b)* | *(c)* | *(d)* | *(e)* | *(f)* | *(g)* | *(h)* | *(i)* | *(j)* | *(k)* | *(l)* | *(m)* | *(n)* |
| 1. *Communications Equipment* | *22* | *34* | | *0* | *60* | *5* | *H* | *TNT* | | *2* | | | |
| 2. | | | | | | | | | | | | | |
| 3. | | | | | | | | | | | | | |
| 4. | | | | | | | | | | | | | |
| 5. | | | | | | | | | | | | | |
| 6. | | | | | | | | | | | | | |
| 7. | | | | | | | | | | | | | |
| 8. | | | | | | | | | | | | | |

**Figure E-17**
SDE Worksheet

**Table E-9**
Actions for Example Number 4, Continued

| Action Number | Action | Procedure | Figure Number | Structure Number |
|---|---|---|---|---|
| 22 | Change to Safevue directory. Enter “CD \Safevue” | Safevue Start Up | Figure C-6 | <1> |
| 23 | Execute Safevue | | | <2> |
| 24 | Read user documentation? No. | | | <3> |
| 25 | Skip user documentation. Press “Esc” key. | | | <6> |
| 26 | Select default materials file. Press “Enter” key. | | | <7> |
| 27 | Enter Project Title: Enter “Example No. 4.” | | | <8> |
| 28 | For laminated glass: | Safevue Selection Analysis | Figure C-13 | <3> |
| 29 | Create Safevue Analysis worksheet. Enter “Example No. 4”, Communications Equipment”, and date. See Figure E-18. | | | <4> |
| 30 | Do Data Preparation for Selection Analysis | | | <5> |
| 31 | Do Glazing Data Preparation for Selection Analysis procedure | Data Preparation for Selection Analysis | Figure C-15 | <1> |
| 32 | Enter glazing dimensions. Enter “22” and “34.” See Figure E-17 | Glazing Data Preparation for Selection Analysis | Figure C-16 | <1> |
| 33 | Enter bite. Leave blank, enter nothing. | | | <3> |
| 34 | Select using resisting material: Annealed Glass. | | | <4> |
| 35 | Determine initial thickness. Start with smallest cross-section: two 1/8-inch layers. | | | <7> |
| 36 | Do Plate Data Preparation procedure | | | <8> |

## Safevue Analysis Worksheet

| 1. Project/Building Identification | 2. Asset Identification | 3. Date |
|---|---|---|
| Example Number 4 | Communications Equipment | 15 Feb 96 |

| Cross-Section Description | | | | | | | | Plate Thickness | Cross-Section Thickness | Dynamic Load | Pass (P) or Fail (F) | Minimum Bite | Maximum Capacity | Load Ratio |
|---|---|---|---|---|---|---|---|---|---|---|---|---|---|---|
| Cross-Section Number | Plate Number | Material | Layer Thickness (b) | | | | | | | | | | | |
| | | (a) | 1 | 2 | 3 | 4 | 5 | (c) | (d) | (e) | (f) | (g) | (h) | (i) |
| 1 | 1 | Annealed Glass | 1/8" | 1/8" | | | | 1/4" | 1/4" | 1.902 | F | | 1.4565 | |
| | 2 | | | | | | | | | | | | | |
| | 3 | | | | | | | | | | | | | |
| | 4 | | | | | | | | | | | | | |
| 2 | 1 | Annealed Glass | 1/4" | 1/8" | | | | 3/8" | 3/8" | 1.902 | P | .50" | 2.016 | 1.06 |
| | 2 | | | | | | | | | | | | | |
| | 3 | | | | | | | | | | | | | |
| | 4 | | | | | | | | | | | | | |
| 3 | 1 | | | | | | | | | | | | | |
| | 2 | | | | | | | | | | | | | |
| | 3 | | | | | | | | | | | | | |
| | 4 | | | | | | | | | | | | | |
| 4 | 1 | | | | | | | | | | | | | |
| | 2 | | | | | | | | | | | | | |
| | 3 | | | | | | | | | | | | | |
| | 4 | | | | | | | | | | | | | |
| 5 | 1 | | | | | | | | | | | | | |
| | 2 | | | | | | | | | | | | | |
| | 3 | | | | | | | | | | | | | |
| | 4 | | | | | | | | | | | | | |

**Figure E-18**
SA Worksheet for Laminated Glass

**Table E-10**
Actions for Example Number 4, Continued

| Action Number | Action | Procedure | Figure Number | Structure Number |
|---|---|---|---|---|
| 37 | For plate: | Plate Data Preparation | Figure C-18 | <1> |
| 38 | Enter type of glazing material. Enter “Annealed Glass.” | | | <2> |
| 39 | Is material glass? Yes. | | | <3> |
| 40 | Enter layer thicknesses. Enter “1/8”” and “1/8”.” See Figure E-18. | | | <4> |
| 41 | Enter total thickness of plate. Enter “1/4””. | | | <5> |
| 42 | Enter total thickness of cross-section. Enter “1/4””. | | | <6> |
| 43 | Do Explosives Data Entry procedure | Data Preparation for Selection Analysis | Figure C-15 | <2> |
| 44 | Enter window coordinates. Enter “0,” “60”, “5”. | Explosives Data Entry | Figure C-4 | <1> |
| 45 | Enter charge shape. Enter “H”. | | | <2> |
| 46 | Enter explosive type. Enter “TNT”. | | | <3> |
| 47 | Enter TNT equivalent weight factor. Leave blank. | | | <4> |
| 48 | Enter explosives weight. Enter “2”. | | | <5> |
| 49 | Do Algorithm Data Preparation. | Data Preparation for Selection Analysis | Figure C-15 | <3> |
| 50 | Enter critical damping percent. Leave blank. | Algorithm Data Preparation. | Figure C-5 | <1> |
| 51 | Enter number of integration time steps. Leave blank. | | | <2> |
| 52 | Enter probability of failure of glass. Leave blank. | | | <3> |
| 53 | Do Data Entry procedure | Safevue Selection Analysis | Figure C-13 | <6> |
| 54 | Do Glazing Data Entry procedure. | Date Entry | Figure C-7 | <1> |

**Table E-11**
Actions for Example Number 4, Continued

| Action Number | Action | Procedure | Figure Number | Structure Number |
|---|---|---|---|---|
| 55 | Enter glazing dimensions. Enter “22, 34”. | Glazing Data Entry | Figure C-8 | <1> |
| 56 | Enter number of stacked plates. Enter “1”. | | | <2> |
| 57 | Enter bite. Press “Enter” key. | | | <3> |
| 58 | For plate: | | | <4> |
| 59 | Enter type of glazing material. Press the “A” and “Enter” keys. | | | <5> |
| 60 | Is material glass? Yes. | | | <6> |
| 61 | Enter number of layers in plate. Enter “2”. | | | <7> |
| 62 | Enter layer thickness codes. Enter “1,1”. | | | <8> |
| 63 | Confirm thicknesses. Press “Enter” key. | | | <9> |
| 64 | Do Explosives Data Entry procedure. | Data Entry | Figure C-7 | <2> |
| 65 | Select blast load model. Select “DOE\TIC-11268 TNT Equivalencies” and press the “Enter” key. | Explosives Data Entry | Figure C-10 | <1> |
| 66 | Enter window coordinates. Enter “0,60,5” | | | <2> |
| 67 | Enter charge shape. Press the “H” and “Enter” keys. | | | <3> |
| 68 | Select explosive type. Enter “23” and press the “Enter” key. | | | <4> |
| 69 | Enter TNT equivalent weight factor. Press the “Enter” key. | | | <5> |
| 70 | Enter explosives weight. Press the “2” and “Enter” keys. | | | <6> |
| 71 | Skip loading function display. Press the “Y” and “Enter” keys. | | | <7> |
| 72 | Do Algorithm Data Entry procedure | Data Entry | Figure C-7 | <3> |
| 73 | Enter critical damping percent. Press the “Enter” key. | Algorithm Data Entry | Figure C-12 | <1> |
| 74 | Enter number of integration time steps. Press the “Enter” key. | | | <2> |
| 75 | Enter probability of failure of glass. Press the “Enter” key. | | | <3> |
| 76 | Choose resistance function. Select “Beason-Vallabhan” and press the “Enter” key. | | | <4> |
| 77 | Start analysis. Press the “C” key. | | | <5> |
| 78 | Do Results Analysis procedure. | Safevue Selection Analysis | Figure C-13 | <7> |

**Table E-12**
Actions for Example Number 4, Continued

| Action Number | Action | Procedure | Figure Number | Structure Number |
|---|---|---|---|---|
| 79 | Record analysis results. Enter “1.902” and an “F” for failure. Press the “C” and “Enter” keys. See Figure E-18. | Results Analysis. | Figure C-19 | <1> |
| 80 | Record maximum capacity. Press the “G” and “Enter” keys. Enter “1.4656”. | | | <2> |
| 81 | Did cross-section fail? Yes. | | | <3> |
| 82 | Modify cross-section to avoid failure. Increase cross-section by 1/8”. Cross-section consists of !/4” and 1/8” layers. | | | <4> |
| 83 | Does cross-section require modification? Yes. | Safevue Selection Analysis | Figure C-13 | <8> |
| 84 | Select change from menu. Press the “K” and “Enter” keys. | | | <9> |
| 85 | Do Plate Data Preparation procedure | | | <10> |
| 86 | For plate: | Plate Data Preparation | Figure C-18 | <1> |
| 87 | Enter type of glazing material. Enter “Annealed Glass.” | | | <2> |
| 88 | Is material glass? Yes. | | | <3> |
| 89 | Enter layer thicknesses. Enter “1/4”” and “1/8”.” See Figure E-18. | | | <4> |
| 90 | Enter total thickness of plate. Enter “3/8””. | | | <5> |
| 91 | Enter total thickness of cross-section. Enter “3/8””. | | | <6> |
| 92 | Repeat actions 53 through 82 for the modified cross-section. | | | |
| 93 | Does cross-section require modification? No. | Safevue Selection Analysis | Figure C-13 | <8> |
| 94 | Enter cross-section on worksheet. Enter “3/8” AG” at the intersection of column (c) and Laminated Glass row of the CSS worksheet. See Figure E-14. | | | <9> |
| 95 | Repeat actions 28 through 94 for each cross-section: laminated polycarbonate, glass-clad polycarbonate and glass-air gap with polycarbonate. See Figure E-19 through Figure E-21. | | | |

## Safevue Analysis Worksheet

| 1. Project/Building Identification | 2. Asset Identification | 3. Date |
|---|---|---|
| Example Number 4 | Communications Equipment | 15 Feb 96 |

| Cross-Section Description | | | | | | | | Plate Thickness | Cross-Section Thickness | Dynamic Load | Pass (P) or Fail (F) | Minimum Bite | Maximum Capacity | Load Ratio |
|---|---|---|---|---|---|---|---|---|---|---|---|---|---|---|
| Cross-Section Number | Plate Number | Material | Layer Thickness (b) | | | | | | | | | | | |
| | | (a) | 1 | 2 | 3 | 4 | 5 | (c) | (d) | (e) | (f) | (g) | (h) | (i) |
| 1 | 1 | Laminated Poly | 1/8" | | | | | 1/8" | 1/8" | 1.902 | F | | 1.492 | |
| | 2 | | | | | | | | | | | | | |
| | 3 | | | | | | | | | | | | | |
| | 4 | | | | | | | | | | | | | |
| 2 | 1 | Laminated Poly | 1/4" | | | | | 1/4" | 1/4" | 1.902 | P | .85" | 4.381 | 2.30 |
| | 2 | | | | | | | | | | | | | |
| | 3 | | | | | | | | | | | | | |
| | 4 | | | | | | | | | | | | | |
| 3 | 1 | | | | | | | | | | | | | |
| | 2 | | | | | | | | | | | | | |
| | 3 | | | | | | | | | | | | | |
| | 4 | | | | | | | | | | | | | |
| 4 | 1 | | | | | | | | | | | | | |
| | 2 | | | | | | | | | | | | | |
| | 3 | | | | | | | | | | | | | |
| | 4 | | | | | | | | | | | | | |
| 5 | 1 | | | | | | | | | | | | | |
| | 2 | | | | | | | | | | | | | |
| | 3 | | | | | | | | | | | | | |
| | 4 | | | | | | | | | | | | | |

**Figure E-19**
SA Worksheet for Laminated Polycarbonate

## Safevue Analysis Worksheet

| 1. Project/Building Identification | 2. Asset Identification | 3. Date |
|---|---|---|
| Example Number 4 | Communications Equipment | 20 Feb 96 |

| Cross-Section Description | | | | | | | | Plate Thickness | Cross-Section Thickness | Dynamic Load | Pass (P) or Fail (F) | Minimum Bite | Maximum Capacity | Load Ratio |
|---|---|---|---|---|---|---|---|---|---|---|---|---|---|---|
| Cross-Section Number | Plate Number | Material | Layer Thickness (b) | | | | | | | | | | | |
| | | (a) | 1 | 2 | 3 | 4 | 5 | (c) | (d) | (e) | (f) | (g) | (h) | (i) |
| 1 | 1 | CSG | 1/8" | | | | | 1/8" | 1/4" | 1.902 | P | .67" | 2.530 | 1.33 |
| | 2 | Polycarbonate | 1/8" | | | | | 1/8" | | | | | | |
| | 3 | | | | | | | | | | | | | |
| | 4 | | | | | | | | | | | | | |
| 2 | 1 | | | | | | | | | | | | | |
| | 2 | | | | | | | | | | | | | |
| | 3 | | | | | | | | | | | | | |
| | 4 | | | | | | | | | | | | | |
| 3 | 1 | | | | | | | | | | | | | |
| | 2 | | | | | | | | | | | | | |
| | 3 | | | | | | | | | | | | | |
| | 4 | | | | | | | | | | | | | |
| 4 | 1 | | | | | | | | | | | | | |
| | 2 | | | | | | | | | | | | | |
| | 3 | | | | | | | | | | | | | |
| | 4 | | | | | | | | | | | | | |
| 5 | 1 | | | | | | | | | | | | | |
| | 2 | | | | | | | | | | | | | |
| | 3 | | | | | | | | | | | | | |
| | 4 | | | | | | | | | | | | | |

**Figure E-20**
SA Worksheet for Glass-Clad Polycarbonate

## Safevue Analysis Worksheet

| 1. Project/Building Identification | 2. Asset Identification | 3. Date |
|---|---|---|
| Example Number 4 | Communications Equipment | 20 Feb 96 |

| Cross-Section Description | | | | | | | | Plate Thickness | Cross-Section Thickness | Dynamic Load | Pass (P) or Fail (F) | Minimum Bite | Maximum Capacity | Load Ratio |
|---|---|---|---|---|---|---|---|---|---|---|---|---|---|---|
| Cross-Section Number | Plate Number | Material | Layer Thickness (b) | | | | | | | | | | | |
| | | (a) | 1 | 2 | 3 | 4 | 5 | (c) | (d) | (e) | (f) | (g) | (h) | (i) |
| 1 | 1 | SG | 1/8" | | | | | 1/8" | 1/4" | 1.902 | P | .67" | 2.492 | 1.31 |
| | 2 | Polycarbonate | 1/8" | | | | | 1/8" | | | | | | |
| | 3 | | | | | | | | | | | | | |
| | 4 | | | | | | | | | | | | | |
| 2 | 1 | | | | | | | | | | | | | |
| | 2 | | | | | | | | | | | | | |
| | 3 | | | | | | | | | | | | | |
| | 4 | | | | | | | | | | | | | |
| 3 | 1 | | | | | | | | | | | | | |
| | 2 | | | | | | | | | | | | | |
| | 3 | | | | | | | | | | | | | |
| | 4 | | | | | | | | | | | | | |
| 4 | 1 | | | | | | | | | | | | | |
| | 2 | | | | | | | | | | | | | |
| | 3 | | | | | | | | | | | | | |
| | 4 | | | | | | | | | | | | | |
| 5 | 1 | | | | | | | | | | | | | |
| | 2 | | | | | | | | | | | | | |
| | 3 | | | | | | | | | | | | | |
| | 4 | | | | | | | | | | | | | |

**Figure E-21**
SA Worksheet for Air-Gap with Polycarbonate

**Table E-13**
Actions for Example Number 4, Continued

| Action Number | Action | Procedure | Figure Number | Structure Number |
|---|---|---|---|---|
| 96 | Frame selection. Selection of frame properties is beyond the scope of handbook. Obtained services of a blast analysis engineer. | Blast Resistant Glazing Selection | Figure 24 | <5> |
| 97 | Enter required frame properties. See Figure E-15 | | | <6> |
| 98 | Anchorage selection. Selection of anchorage properties is beyond the scope of handbook. Obtained services of a blast analysis engineer. | | | <7> |
| 99 | Enter required anchorage properties. See Figure E-22. | | | <8> |
| 100 | Wall selection. Selection of wall properties is beyond the scope of handbook. Obtained services of a blast analysis engineer. | | | <9> |
| 101 | Enter required wall thickness. See Figure E-16. | | | <10> |
| 102 | Do Environmental Analysis procedure. | System Selection | Figure 6 | <2> |
| 103 | For laminated glass cross-section: | Environmental Analysis | Figure 30 | <1> |
| 104 | Select using cross-section type: laminated glass. | | | <2> |
| 105 | Do Laminated Glass Environmental Analysis | | | <6> |
| 106 | Exposed to 0 F or lower temperatures? No. | Laminated Glass Environmental Analysis | Figure 33 | <1> |
| 107 | Exposed to 30 F or lower temperatures? Yes. | | | <3> |
| 108 | Consider urethane interlayer. | | | <4> |
| 109 | Repeat actions 104 through 108 for each cross-section: polycarbonate and glass-clad polycarbonate. | | | |
| 110 | Do Selection Reconciliation procedure. | System Selection | Figure 6 | <3> |
| 111 | For laminated glass: | Selection Reconciliation | Figure 10 | <1> |
| 112 | Identify the highest minimum requirements for cross-section type. 1-3/4” AG. | | | <2> |
| 113 | Repeat action 112 for each cross-section type: laminated polycarbonate, glass-clad polycarbonate and glass-air gap with polycarbonate. | | | |
| 114 | For frame material: | Selection Reconciliation | Figure 10 | <3> |
| 115 | Identify the highest minimum requirement for frame property: steel | | | <4> |
| 116 | Repeat action 115 for each frame property on frame selection worksheet.. | | | |
| 117 | For anchor bolt type: | Selection Reconciliation | Figure 10 | <5> |
| 118 | Identify the highest minimum requirement for anchorage property: expansion bolt. | | | <6> |
| 119 | Repeat action 118 for each anchorage property on anchorage selection worksheet. | | | |

**Anchorage Selection Worksheet**

| 1. Project/Building Identification | 2. Asset Identfication | 3. Date |
|---|---|---|
| Example Number 4 | Communications Equipment | 20 Feb 96 |

| *Anchorage Properties* | *Tactics* | | | | Resolved Specifications |
|---|---|---|---|---|---|
| | Moving Vehicle Bomb *(a)* | Stationary Vehicle Bomb *(b)* | Exterior *(c)* | Forced Entry *(d)* | *(e)* |
| Anchor Bolt Type | | | Expansion | | Expansion |
| Anchor Bolt Diameter | | | 3/8" | | 3/8" |
| Anchor Bolt Embedment | | | 3" | | 3" |
| Maximum Anchor Bolt Spacing: Frame Corner To Bolt | | | 9" | | 9" |
| Maximum Anchor Bolt Spacing: Between Adjacent Bolts | | | 12" | | 12" |
| Removable Stop Anchor Bolt Type | | | Shouldered | | Shouldered |
| Removable Stop Anchor Bolt Diameter | | | 1/4" | | 1/4" |
| Number of Removable Stop Anchor Bolts Per Side | | | 3 | | 3 |
| Removable Stop Anchor Bolt Spacing: Frame Corner To Bolt | | | 8" | | 8" |
| Removable Stop Anchor Bolt Spacing: Between Adjacent Bolts | | | 16" | | 16" |

Does Anchorage Meet Design Requirements? ☐ Yes ☐ No

**Figure E-22**
AS Worksheet Before Revising Requirements

**Table E-14**
Actions for Example Number 4, Continued

| Action Number | Action | Procedure | Figure Number | Structure Number |
|---|---|---|---|---|
| 120 | For reinforced concrete block: | Selection Reconciliation | Figure 10 | <7> |
| 121 | Identify the highest minimum requirement for wall construction. 6”. | | | <8> |
| 122 | Assess status of requirements. Cross-section selection worksheet does not meet requirements. Set it aside. | System Selection | Figure 6 | <4> |
| 123 | Are all requirements met? No. | | | <5> |
| 124 | For unmet forced entry requirement: | | | <7> |
| 125 | Do Requirement Revision procedure. | | | <8> |
| 126 | Can procedures be changed? No. | Requirements Revision | Figure 14 | <1> |
| 127 | Can window be eliminated? No. | | | <4> |
| 128 | Can site layout be changed? No. | | | <6> |
| 129 | Lower attack level. Lower forced entry DBT to medium. | | | <9> |
| 130 | Accept increased risk. No additional risk is incurred as walls provide similar level of protection. | | | <10> |
| 131 | Repeat actions 3 through 121 for modified requirements. See Figure E-23 through Figure E-26 | | | |
| 132 | Assess status of requirements. All requirements are met. | System Selection | Figure 6 | <4> |
| 133 | Are all requirements met? Yes. | | | <5> |
| 134 | Do Cost Estimate procedure | | | <6> |
| 135 | For glass-clad polycarbonate: | Cost Estimate | Figure 34 | <1> |
| 136 | Do Cross-Section Cost Estimate procedure | | | <2> |
| 137 | Do Cross-Section Material Cost Estimate | Cross-section Cost Estimate | Figure 35 | <1> |
| 138 | For glass layer: | Cross-section Material Cost Estimate | Figure 36 | <1> |
| 139 | Determine layer cost factor. Assume laminated glass consists of 2 3/16” layers. Use Table 28 and Table 29: 4.8 and 2.3 pounds. See Figure E-27. | | | <2> |
| 140 | Does layer have an interlayer? Yes. | | | <3> |
| 141 | Determine interlayer cost factor. Use urethane to combat cold temperatures. Assume .050” thickness. Use Table 34: 9.3. | | | <4> |
| 142 | Calculate combined layer cost factor. 4.8 + 9.3 = 14.1. | | | <5> |
| 143 | Repeat actions 139 through 142 for remaining layers: 3/16 inch glass layer, 1/8 inch polycarbonate layer, 1/4 inch polycarbonate layer, and 1/8 inch polycarbonate layer. | | | |

**Cross-Section Selection Worksheet**

| 1. Project/Building Identification | 2. Asset Identification | 3. Date |
|---|---|---|
| Example Number 4 | Communications Equipment | 12 Feb 96 |

| *Cross-Section Type* | *Component* | *Tactic* | | | | | Resolved Thickness |
|---|---|---|---|---|---|---|---|
| | | Moving Vehicle Bomb (a) | Stationary Vehicle Bomb (b) | Exterior (c) | Ballistics (d) | Forced Entry (e) | (f) |
| Monolithic Glass | Total Thickness | | | | | | |
| Laminated Glass | Total Thickness | | | 3/8" AG | 1-3/4" AG | | |
| Monolithic Polycarbonate | Total Thickness | | | | | | |
| Laminated Polycarbonate | Total Thickness | | | 1/4" | 1-1/4" | 1-1/4" | 1-1/4" |
| Glass-Clad Polycarbonate | Total Thickness | | | 1/4" | 1" | 15/16" | 1" |
| | Polycarbonate Thickness | | | 1/8" | 1/2" | 1/2" | 1/2" |
| | Glass Thickness | | | 1/8" CSG | 3/8" CSG | 3/8" CSG | 3/8" CSG |
| Extruded Ionomer | Total Thickness | | | | | | |
| | Ionomer Thickness | | | | | | |
| | Glass Thickness | | | | | | |
| Glass-Air Gap | Total Thickness | | | | | | |
| | Glass Thickness | | | | | | |
| Glass-Air Gap with Polycarbonate | Total Thickness | | | 3/4" | 1-1/4" | 1-3/4" | 1-3/4" |
| | Polycarbonate Thickness | | | 1/8" | 1/2" | 1-1/4" | 1-1/4" |
| | Glass Thickness | | | 1/8" SG | 1/2" SG | 1/2" SG | 1/2" SG |

Does Glazing Cross-Section Meet Design Requirements? ☒ Yes ☐ No

**Figure E-23**
CSS Worksheet After Revising Requirements

**Frame Selection Worksheet**

| *Frame Properties* | *Tactics* | | | | | Resolved Specifications |
|---|---|---|---|---|---|---|
| | Moving Vehicle Bomb *(a)* | Stationary Vehicle Bomb *(b)* | Exterior *(c)* | Ballistics *(d)* | Forced Entry *(e)* | *(f)* |
| Frame Material | | | steel | steel | steel | steel |
| Frame Thickness | | | 1/4" | 1/4" | 1/4" | 1/4" |
| Removable Stop Thickness | | | 3/16" | 3/16" | 3/16" | 3/16" |
| Bite Depth | | | 7/8" | | 1" | 1" |
| Glazing Rabbet Depth | | | | | 1-1/4" | 1-1/4" |
| Does Frame Meet Design Requirements? | ☒ Yes ☐ No | | | | | |

**Figure E-24**
FS Worksheet After Revising Requirements

**Anchorage Selection Worksheet**

| 1. Project/Building Identification | 2. Asset Identfication | 3. Date |
|---|---|---|
| Example Number 4 | Communications Equipment | 20 Feb 96 |

| *Anchorage Properties* | *Tactics* | | | | Resolved Specifications |
|---|---|---|---|---|---|
| | Moving Vehicle Bomb *(a)* | Stationary Vehicle Bomb *(b)* | Exterior *(c)* | Forced Entry *(d)* | *(e)* |
| Anchor Bolt Type | | | Expansion | Expansion | Expansion |
| Anchor Bolt Diameter | | | 3/8" | 1/2" | 1/2" |
| Anchor Bolt Embedment | | | 3" | 3" | 3" |
| Maximum Anchor Bolt Spacing: Frame Corner To Bolt | | | 9" | 6" | 6" |
| Maximum Anchor Bolt Spacing: Between Adjacent Bolts | | | 12" | 12" | 12" |
| Removable Stop Anchor Bolt Type | | | Shouldered | Shouldered | Shouldered |
| Removable Stop Anchor Bolt Diameter | | | 1/4" | 3/8" | 3/8" |
| Number of Removable Stop Anchor Bolts Per Side | | | 3 | 2 | 3 |
| Removable Stop Anchor Bolt Spacing: Frame Corner To Bolt | | | 8" | 9" | 8" |
| Removable Stop Anchor Bolt Spacing: Between Adjacent Bolts | | | 16" | 18" | 16" |

Does Anchorage Meet Design Requirements? [X] Yes [ ] No

**Figure E-25**
AS Worksheet After Revising Requirements

## Wall Selection Worksheet

| *Wall Type* | *Tactic* | | | | | Resolved Thickness |
|---|---|---|---|---|---|---|
| | Moving Vehicle Bomb *(a)* | Stationary Vehicle Bomb *(b)* | Exterior *(c)* | Ballistics *(d)* | Forced Entry *(e)* | *(f)* |
| Wood Frame | | | | | | |
| Brick | | | | | | |
| Reinforced Concrete Block | | | 6" | 4" | 8" | 8" |
| Reinforced Concrete | | | | | | |

Does Wall Meet Design Requirements? [X] Yes [ ] No

**Figure E-26**
WS Worksheet After Revising Requirements

**Cross-Section Cost Factor Worksheet**

| Layer Number (a) | Layer Material (b) | Thickness (in) (c) | Table Number (d) | Layer Cost Factor (e) | Weight (lb/sq-ft) (f) | Interlayer Material (g) | Interlayer Thickness (h) | Interlayer Cost Factor (i) | Combined Cost Factor (j) = (e) + (i) |
|---|---|---|---|---|---|---|---|---|---|
| 1 | CSG | 3/16" | 29 | 4.8 | 2.3 | Urethane | .05" | 9.3 | 14.1 |
| 2 | CSG | 3/16" | 29 | 4.8 | 2.3 | Urethane | .05" | 9.3 | 14.1 |
| 3 | Polycarbonate | 1/8" | 31 | 12.6 | 0.7 | Urethane | .05" | 9.3 | 21.9 |
| 4 | Polycarbonate | 1/4" | 31 | 22.0 | 1.4 | Urethane | .05" | 9.3 | 31.3 |
| 5 | Polycarbonate | 1/8" | 31 | 12.6 | 0.7 | | | | 12.6 |
| 6 | | | | | | | | | |
| 7 | | | | | | | | | |
| 8 | | | | | | | | | |
| Sum of Material Weights (lb/sq-ft) | | | | (k) = S (f) | 7.4 | | | | |
| Window Height (ft) | | | | (l) | 2 | | | | |
| Window Width (ft) | | | | (m) | 3 | | | | |
| Window Area (sq-ft) | | | | (n) = (l) x (m) | 6 | | | | |
| Cross-Section Weight (lb) | | | | (o) = (k) x (n) | 44.4 | | | | |
| Sum of Material Cost Factors | | | | | | | | (p) = S(j) | 94.0 |
| Number of Windows | | | | | | | | (q) | 2 |
| Cross-Section Material Cost Factor | | | | | | | | (r) = (n) x (p) x (q) | 1128 |
| Size Fabrication Cost Factor | | | | | | | | (s) | 1.0 |
| Weight Fabrication Cost Factor | | | | | | | | (t) | 1.0 |
| Material Fabrication Cost Factor | | | | | | | | (u) | 1.25 |
| Cross-Section Cost Factor | | | | | | | | (v) = (r) x (s) x (t) x (u) | 1410 |

**Figure E-27**
CSCF Worksheet for Glass-Clad Polycarbonate

**Table E-15**
Actions for Example Number 4, Continued

| Action Number | Action | Procedure | Figure Number | Structure Number |
|---|---|---|---|---|
| 144 | Calculate cross-section weight: 44.4 pounds. See Figure E-27 | Cross-Section Material Cost Estimate | Figure 36 | <6> |
| 145 | Calculate cross-section material cost factor: 1128. | | | <7> |
| 146 | Do Cross-section Fabrication Cost Estimate procedure | Cross-Section Cost Estimate | Figure 35 | <2> |
| 147 | Is cross-section smaller than 6 square feet? No. | Cross-Section Fabrication Cost Estimate | Figure 37 | <1> |
| 148 | Enter normal size cost factor: 1.0. | | | <3> |
| 149 | Is cross-section heavier than 300 pounds? No. | | | <4> |
| 150 | Enter normal weight cost factor. 1.0. | | | <6> |
| 151 | Is cross-section all glass. No. | | | <7> |
| 152 | Enter mixed material cost factor: 1.25. | | | <9> |
| 153 | Calculate cross-section cost factor: 1410. | Cross-Section Cost Estimate | Figure 35 | <3> |
| 154 | Do Frame Cost Estimate procedure. | Cost Estimate | Figure 34 | <3> |
| 155 | Enter frame material: steel. See Figure E-28 | Frame Cost Estimate | Figure 39 | <1> |
| 156 | Enter frame thickness: 1/4”. | | | <2> |
| 157 | Get frame type cost factor using Table 35: 2.3. | | | <3> |
| 158 | Does the frame require a sub-frame? No. | | | <4> |
| 159 | Enter cost factor for no sub-frame: 1.0. | | | <6> |
| 160 | Enter frame size: 10 linear feet. | | | <7> |
| 161 | Calculate cost factor per frame: 23. | | | <8> |
| 162 | Enter number of frames: 2. | | | <9> |
| 163 | Calculate frame cost factor: 46. | | | <10> |
| 164 | Do Installation Cost Estimate procedure. | Cost Estimate | Figure 34 | <4> |

**Frame Cost Factor Worksheet**

| 1. Project/Building Identification | 2. Asset Identification | 3. Date |
|---|---|---|
| Example Number 4 | Communications Equipment | 21 Feb 96 |

| Description | Material (a) | Thickness (in.) (b) | Type Cost Factor (c) | Sub-frame Cost Factor (d) | Size (linear ft.) (e) | Cost Factor per Frame (f) = (c) x (d) x (e) | Number of Frames (g) | Frame Cost Factor (h) = (f) x (g) |
|---|---|---|---|---|---|---|---|---|
| Heavy Security | steel | 1/4" | 2.3 | 1.0 | 10 | 23 | 2 | 46 |
| | | | | | | | | |
| | | | | | | | | |
| | | | | | | | | |
| | | | | | | | | |
| | | | | | | | | |
| | | | | | | | | |
| | | | | | | | | |
| | | | | | | | | |
| | | | | | | | | |
| | | | | | | | | |
| | | | | | | | | |
| | | | | | | | | |
| | | | | | | | | |
| | | | | | | | | |
| | | | | | | | | |
| | | | | | | | | |

**Figure E-28**
FCF Worksheet

**Table E-16**
Actions for Example Number 4, Continued

| Action Number | Action | Procedure | Figure Number | Structure Number |
|---|---|---|---|---|
| 165 | Is the construction retrofit? Yes. | Installation Cost Estimate | Figure 40 | <1> |
| 166 | Consider cost of hardening wall. Wall hardening is not required. | | | <2> |
| 167 | Does the glazing system weigh over 250 lb? No. See Figure E-29 | | | <3> |
| 168 | Is frame cast in place? No. | | | <5> |
| 169 | Include cost of preparing wall for anchorage: $100. | | | <7> |
| 170 | Include cost of aligning and anchoring frame: $125. | | | <8> |
| 171 | Calculate installation cost: $450. | | | <9> |
| 172 | Do Initial Cost Estimate procedure | Cost Estimate | Figure 34 | <5> |
| 173 | Enter base unit cost for cross-section: $0.40. See Figure E-30. | Initial Cost Estimate. | Figure 41 | <1> |
| 174 | Calculate cross-section cost: $564. | | | <2> |
| 175 | Enter base unit cost for frame: $29. | | | <3> |
| 176 | Calculate frame cost: $1334. | | | <4> |
| 177 | Sum component costs: $1898. | | | <5> |
| 178 | Sum component and Installation costs: $2348. | | | <6> |
| 179 | Life cycle cost estimate. 1.9 x $2348 = $4461. | | | <7> |
| 180 | Repeat actions 136 through 179 for remaining cross-sections on cross-section selection worksheet. See Figure E-31 and Figure E-32. | | | |

**Installation Cost Worksheet**

| 1. Project/Building Identification | 2. Asset Identification | 3. Date |
|---|---|---|
| Example Number 4 | Communications Equipment | 21 Feb 96 |

| Description | Wall Hardening (a) | Special Handling (b) | Wall Preparation (c) | Frame Alignment (d) | Sub-frame Alignment (e) | Cost per Window (f) = (a) + (b) + (c) + (d) + (e) | Number of Windows (g) | Installation Cost (h) = (f) x (g) |
|---|---|---|---|---|---|---|---|---|
| Heavy Frame | 0 | 0 | $100 | $125 | 0 | $225 | 2 | $450 |
| | | | | | | | | |
| | | | | | | | | |
| | | | | | | | | |
| | | | | | | | | |
| | | | | | | | | |
| | | | | | | | | |
| | | | | | | | | |
| | | | | | | | | |
| | | | | | | | | |
| | | | | | | | | |
| | | | | | | | | |
| | | | | | | | | |
| | | | | | | | | |
| | | | | | | | | |
| | | | | | | | | |
| | | | | | | | | |

**Figure E-29**
Installation Cost Worksheet

**Initial Cost Worksheet**

| 1. Project/Building Identification | 2. Asset Identification | 3. Date |
|---|---|---|
| Example Number 4 | Communications Equipment | 21 Feb 96 |

| Description | Component | Cost Factor (a) | Base Unit Cost (b) | Component Cost (c) = (a) x (b) | Total Component Cost (d) =S (c) | Installation Cost (e) | Initial Cost (f) = (d) + (e) |
|---|---|---|---|---|---|---|---|
| Glass-Clad Polycarbonate | Cross-section | 1410 | $0.40 | $564 | $1898 | $450 | $2348 |
| | Frame | 46 | $29 | $1334 | | | |
| Laminated Polycarbonate | Cross-section | 2320 | $0.40 | $928 | $2262 | $450 | $2711 |
| | Frame | 46 | $29 | $1334 | | | |
| Air-Gap with Polycarbonate | Cross-section | 3291 | $0.40 | $1316 | $2650 | $450 | $3100 |
| | Frame | 46 | $29 | $1334 | | | |
| | Cross-section | | | | | | |
| | Frame | | | | | | |
| | Cross-section | | | | | | |
| | Frame | | | | | | |
| | Cross-section | | | | | | |
| | Frame | | | | | | |
| | Cross-section | | | | | | |
| | Frame | | | | | | |
| | Cross-section | | | | | | |
| | Frame | | | | | | |

**Figure E-30**
Initial Cost Worksheet

**Cross-Section Cost Factor Worksheet**

| Layer Number (a) | Layer Material (b) | Thickness (in) (c) | Table Number (d) | Layer Cost Factor (e) | Weight (lb/sq-ft) (f) | Interlayer Material (g) | Interlayer Thickness (h) | Interlayer Cost Factor (i) | Combined Cost Factor (j) = (e) + (i) |
|---|---|---|---|---|---|---|---|---|---|
| 1 | Polycarbonate | 1/8" | 31 | 12.6 | 0.7 | Urethane | .05" | 9.3 | 21.9 |
| 2 | Polycarbonate | 1/2" | 31 | 57.5 | 2.8 | Urethane | .05" | 9.3 | 66.8 |
| 3 | Polycarbonate | 1/2" | 31 | 57.5 | 2.8 | Urethane | .05" | 9.3 | 66.8 |
| 4 | Polycarbonate | 1/8" | 31 | 12.6 | 0.7 | | | | 12.6 |
| 5 | | | | | | | | | |
| 6 | | | | | | | | | |
| 7 | | | | | | | | | |
| 8 | | | | | | | | | |
| Sum of Material Weights (lb/sq-ft) | | | | (k) = S (f) | 7.0 | | | | |
| Window Height (ft) | | | | (l) | 2 | | | | |
| Window Width (ft) | | | | (m) | 3 | | | | |
| Window Area (sq-ft) | | | | (n) = (l) x (m) | 6 | | | | |
| Cross-Section Weight (lb) | | | | (o) = (k) x (n) | 42.0 | | | | |
| Sum of Material Cost Factors | | | | | | | | (p) = S(j) | 168.1 |
| Number of Windows | | | | | | | | (q) | 2 |
| Cross-Section Material Cost Factor | | | | | | | | (r) = (n) x (p) x (q) | 2017 |
| Size Fabrication Cost Factor | | | | | | | | (s) | 1.0 |
| Weight Fabrication Cost Factor | | | | | | | | (t) | 1.0 |
| Material Fabrication Cost Factor | | | | | | | | (u) | 1.15 |
| Cross-Section Cost Factor | | | | | | | | (v) = (r) x (s) x (t) x (u) | 2320 |

**Figure E-31**
CSCF Worksheet for Laminated Polycarbonate

**Cross-Section Cost Factor Worksheet**

| Layer Number (a) | Layer Material (b) | Thickness (in) (c) | Table Number (d) | Layer Cost Factor (e) | Weight (lb/sq-ft) (f) | Interlayer Material (g) | Interlayer Thickness (h) | Interlayer Cost Factor (i) | Combined Cost Factor (j) = (e) + (i) |
|---|---|---|---|---|---|---|---|---|---|
| 1 | AG | 1/8" | 29 | 1.0 | 1.6 | Urethane | .05" | 9.3 | 10.3 |
| 2 | AG | 1/8" | 29 | 1.0 | 1.6 | | | | 1.0 |
| 3 | Air-Gap | 1/4" | 28 | 40.0 | 0.0 | | | | 40.0 |
| 4 | Polycarbonate | 1/8" | 31 | 12.6 | 0.7 | Urethane | .05" | 9.3 | 21.9 |
| 5 | Polycarbonate | 1/2" | 31 | 57.5 | 2.8 | Urethane | .05" | 9.3 | 66.8 |
| 6 | Polycarbonate | 1/2" | 31 | 57.5 | 2.8 | Urethane | .05" | 9.3 | 66.8 |
| 7 | Polycarbonate | 1/8" | 31 | 12.6 | 0.7 | | | | 12.6 |
| 8 | | | | | | | | | |
| Sum of Material Weights (lb/sq-ft) | | | | (k) = S (f) | 10.2 | | | | |
| Window Height (ft) | | | | (l) | 2 | | | | |
| Window Width (ft) | | | | (m) | 3 | | | | |
| Window Area (sq-ft) | | | | (n) = (l) x (m) | 6 | | | | |
| Cross-Section Weight (lb) | | | | (o) = (k) x (n) | 61.2 | | | | |
| Sum of Material Cost Factors | | | | | | | | (p) = S(j) | 219.4 |
| Number of Windows | | | | | | | | (q) | 2 |
| Cross-Section Material Cost Factor | | | | | | | | (r) = (n) x (p) x (q) | 2633 |
| Size Fabrication Cost Factor | | | | | | | | (s) | 1.0 |
| Weight Fabrication Cost Factor | | | | | | | | (t) | 1.0 |
| Material Fabrication Cost Factor | | | | | | | | (u) | 1.25 |
| Cross-Section Cost Factor | | | | | | | | (v) = (r) x (s) x (t) x (u) | 3291 |

**Figure E-32**
CSCF Worksheet for Air-Gap with Polycarbonate

# APPENDIX F

## CROSS-SECTIONS

F.1 Introduction. This appendix presents illustrations of glazing cross-sections that are referenced in the system analysis part of the handbook. The cross-sections are divided into five categories:

a) Air-Gap
b) Extruded Ionomer
c) Glass-Clad Polycarbonate
d) Laminated Glass
e) Laminated Polycarbonate.

Within each category, cross-sections are ordered by thickness from thinnest to thickest.

Figure F-1 presents a legend to assist in interpreting the material types that comprise each cross-section.

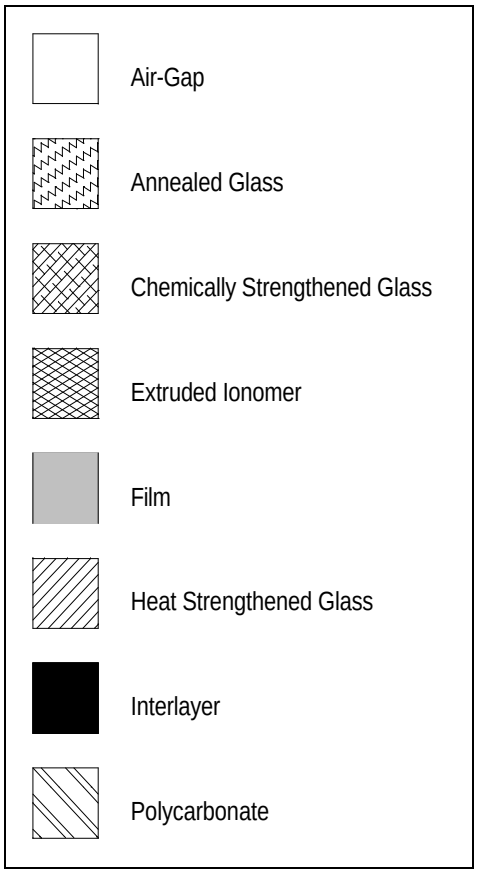


**Figure F-1**
Cross-Section Material Legend

F.2 Air-Gap. Six air-gap cross-sections are referenced in the handbook. Figure F-2 through Figure F-7 illustrate these cross-sections.

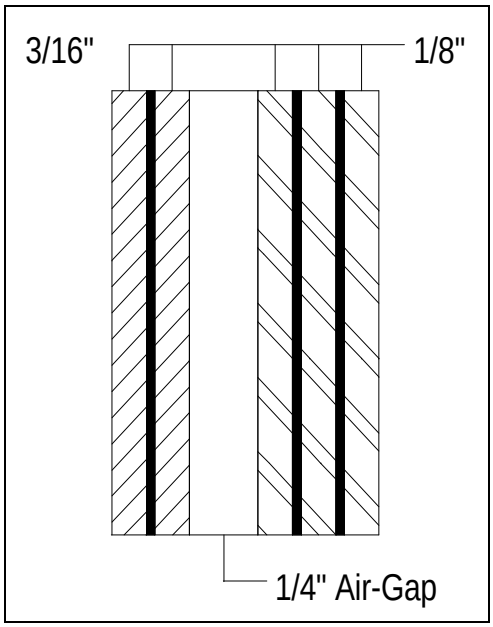


**Figure F-2**
7/8-inch Air-Gap

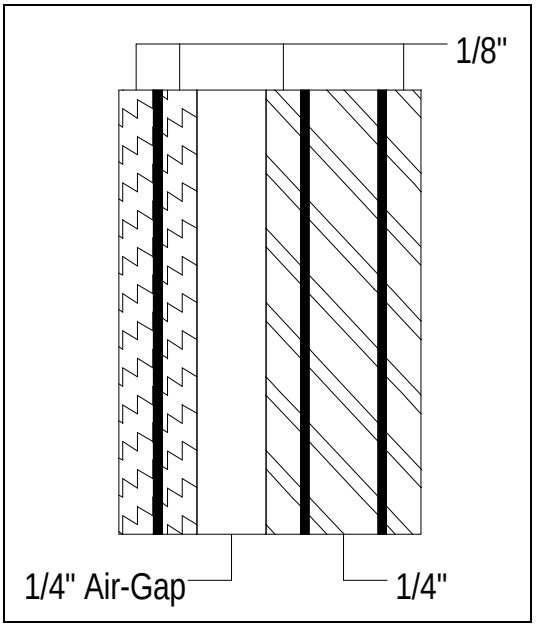


**Figure F-3**
1-inch Air-Gap

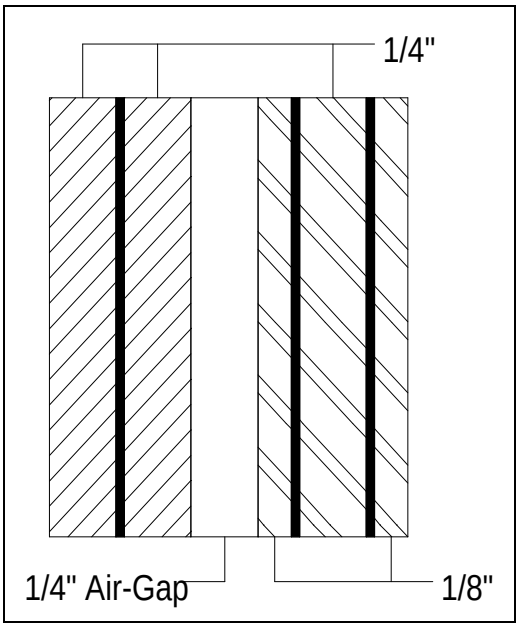


**Figure F-4**
1-1/4-inch Air-Gap

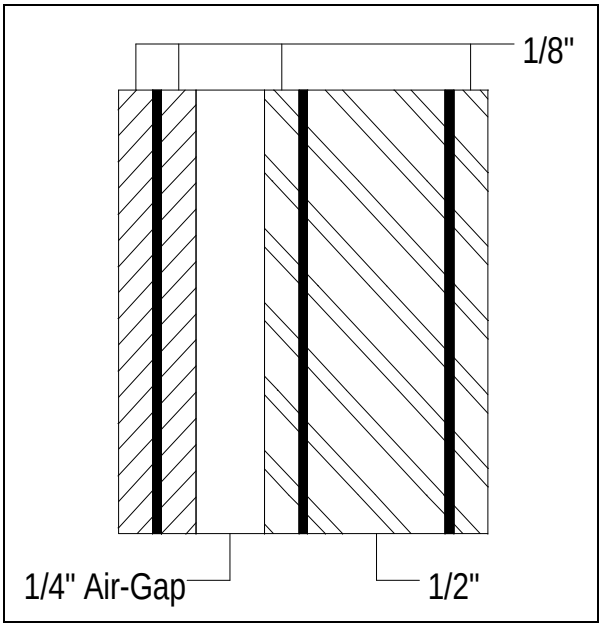


**Figure F-5**
1-1/4-inch Air-Gap

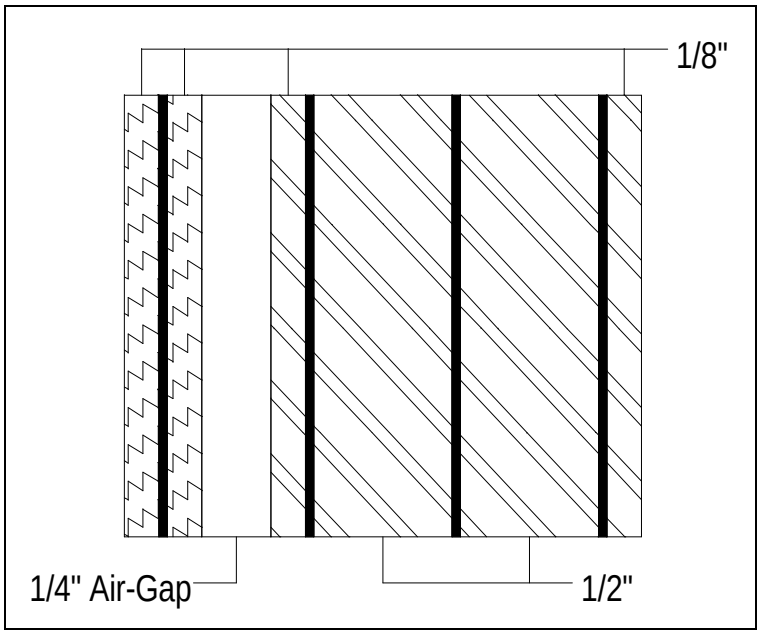


**Figure F-6**
1-3/4-inch Air-Gap

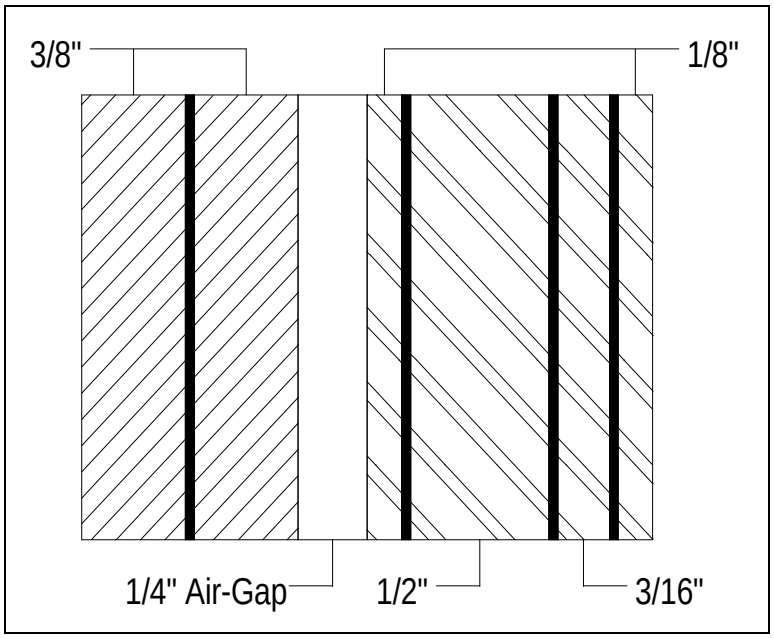


**Figure F-7**
1-15/16-inch Air-Gap

F.3 Extruded Ionomer. Two extruded ionomer cross-sections are referenced in the handbook. Figure F-8 and Figure F-9 illustrate these cross-sections.

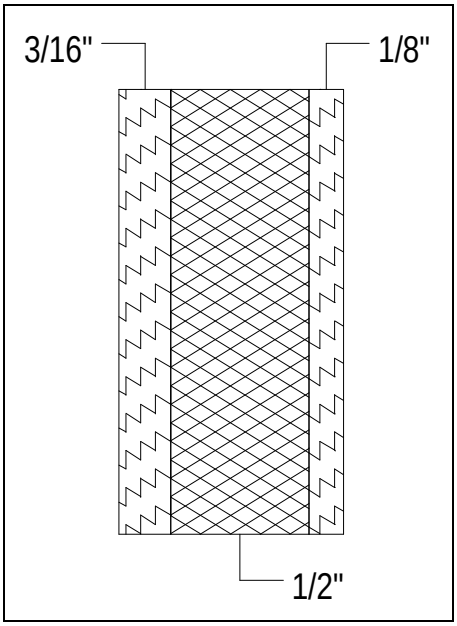


**Figure F-8**
13/16-inch Extruded Ionomer

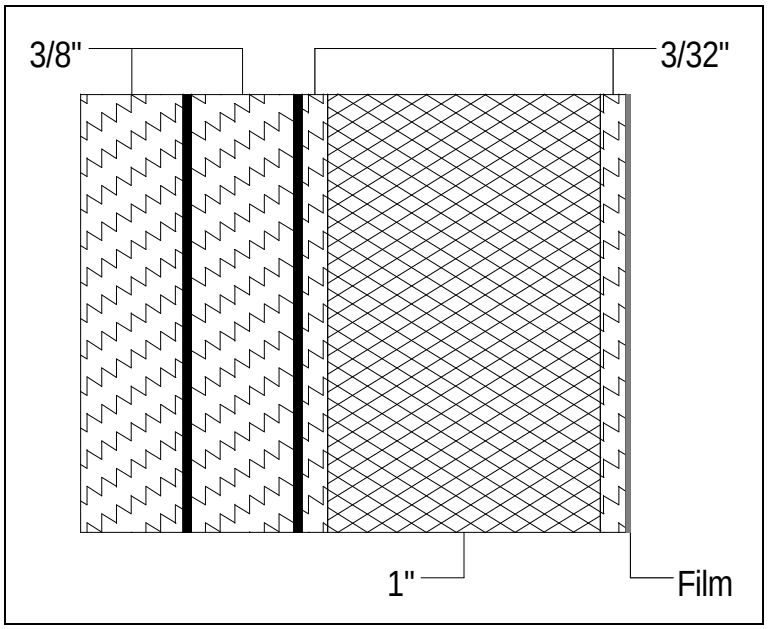


**Figure F-9**
2-1/8-inch Extruded Ionomer

F.4 Glass-Clad Polycarbonate. Seventeen glass-clad polycarbonate cross-sections are referenced in the handbook. Figure F-10 through Figure F-26 illustrate these cross-sections.

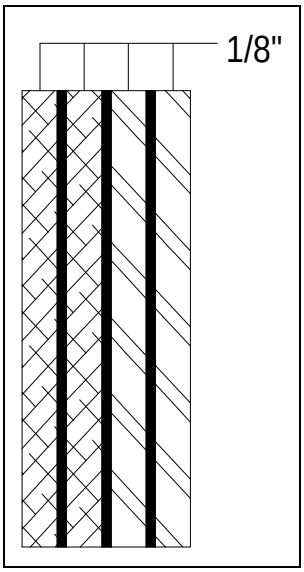


**Figure F-10**
9/16-inch Glass-Clad Polycarbonate

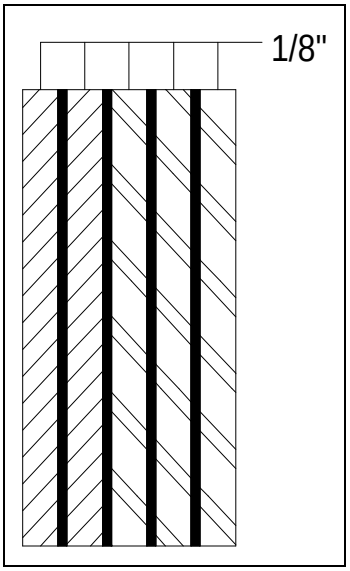


**Figure F-11**
5/8-inch Glass-Clad Polycarbonate

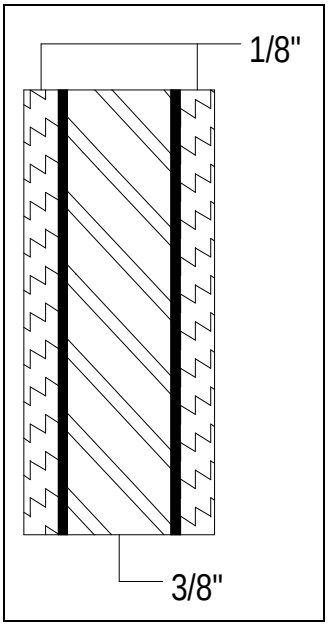


**Figure F-12**
11/16-inch Glass-Clad Polycarbonate

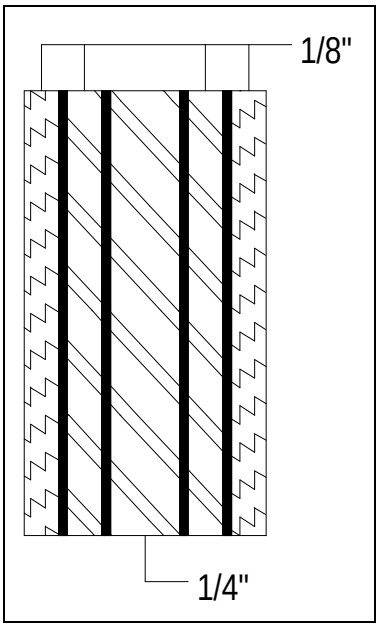


**Figure F-13**
13/16-inch Glass-Clad Polycarbonate

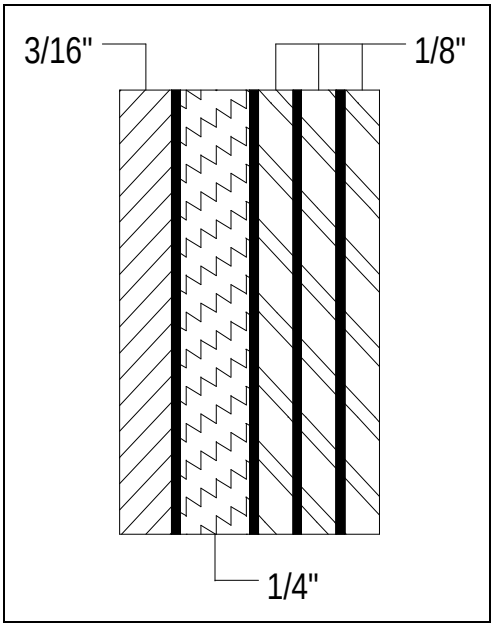


**Figure F-14**
15/16-inch Glass-Clad Polycarbonate

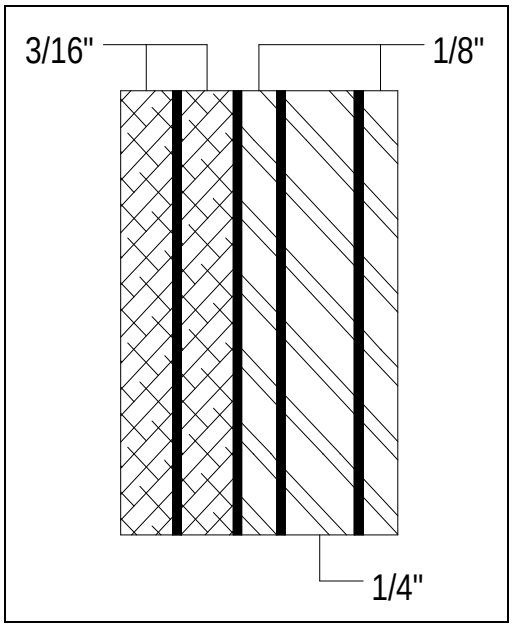


**Figure F-15**
1-inch Glass-Clad Polycarbonate

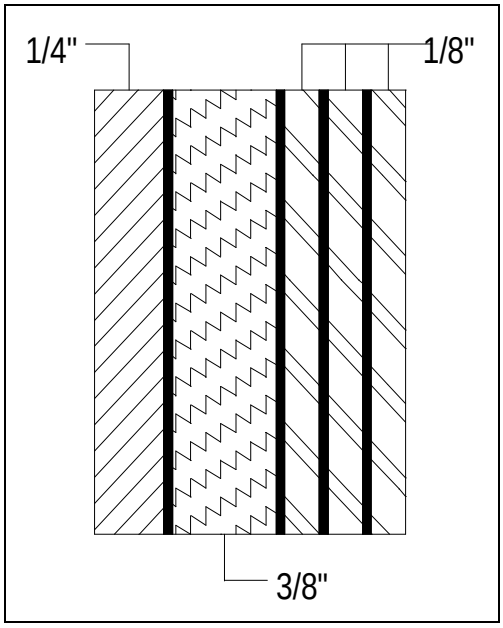


**Figure F-16**
1-3/16-inch Glass-Clad Polycarbonate

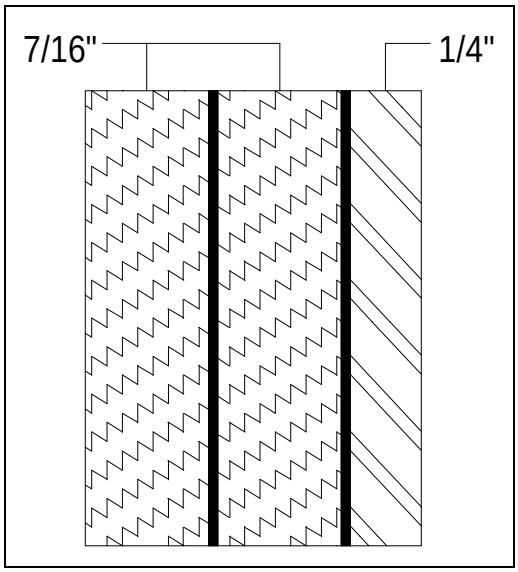


**Figure F-17**
1-3/16-inch Glass-Clad Polycarbonate

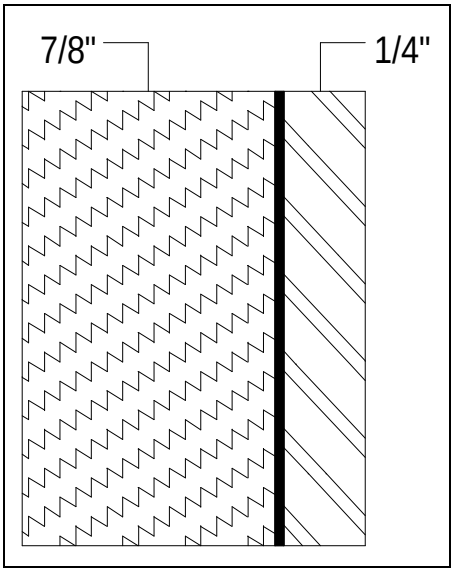


**Figure F-18**
1-3/16-inch Glass-Clad Polycarbonate

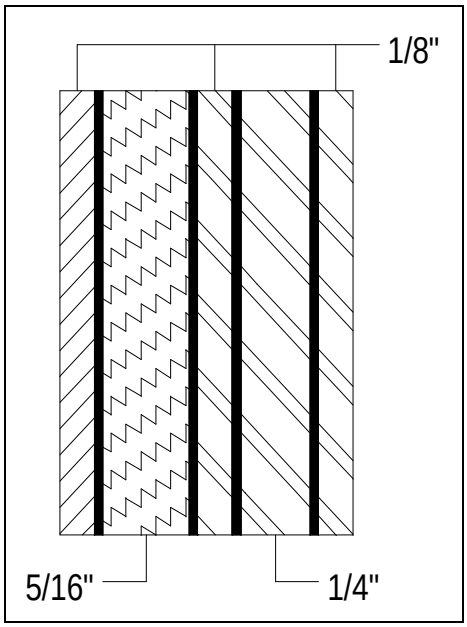


**Figure F-19**
1-1/4-inch Glass-Clad Polycarbonate

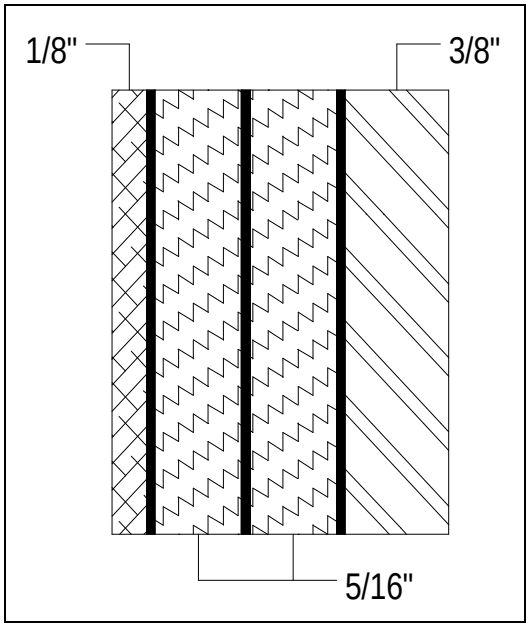


**Figure F-20**
1-5/16-inch Glass-Clad Polycarbonate

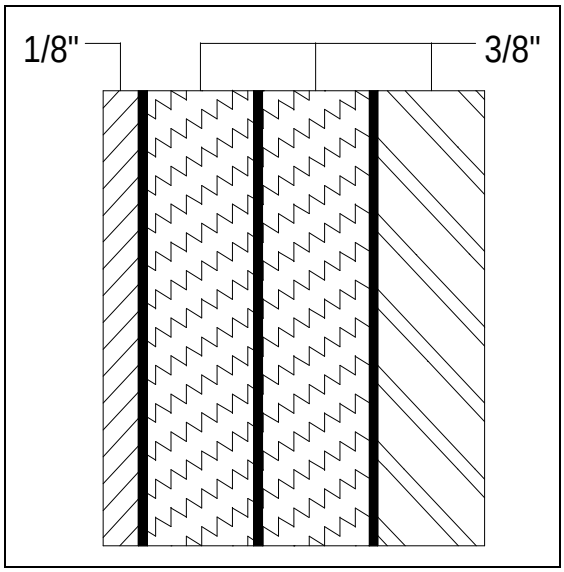


**Figure F-21**
1-3/8-inch Glass-Clad Polycarbonate

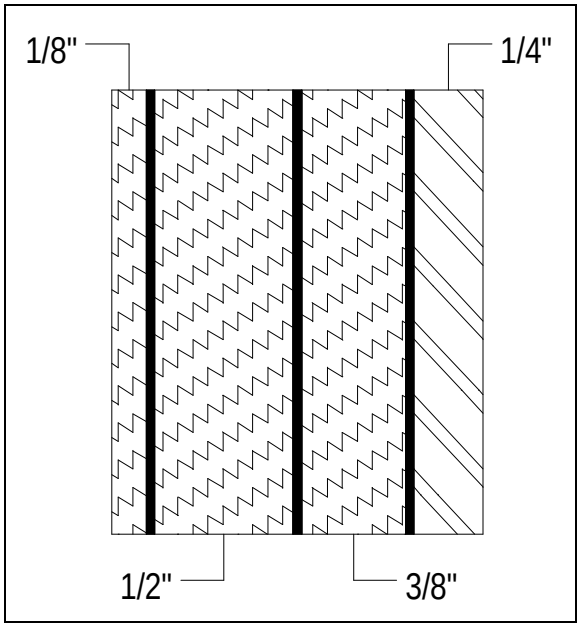


**Figure F-22**
1-3/8-inch Glass-Clad Polycarbonate

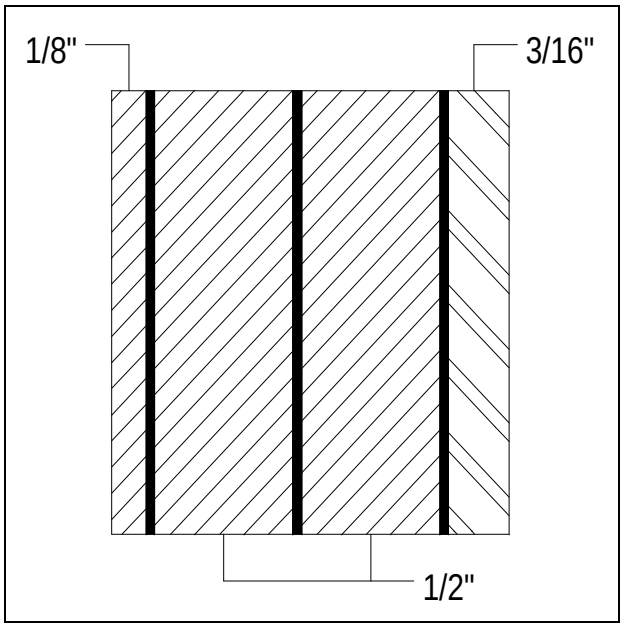


**Figure F-23**
1-1/2-inch Glass-Clad Polycarbonate

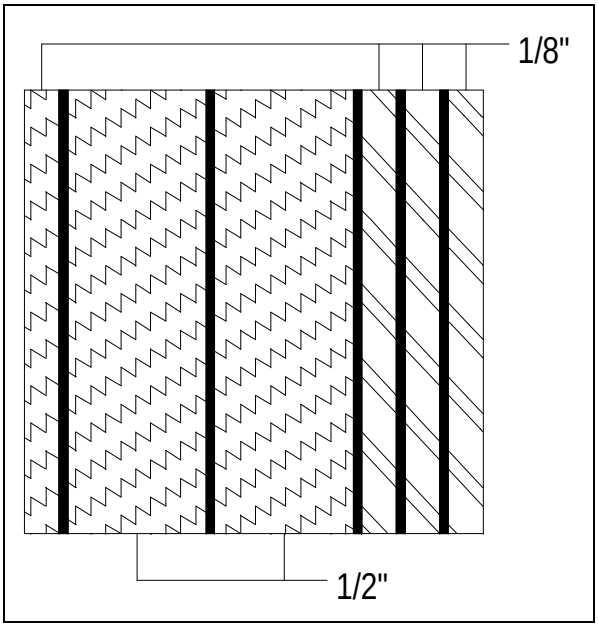


**Figure F-24**
1-5/8-inch Glass-Clad Polycarbonate

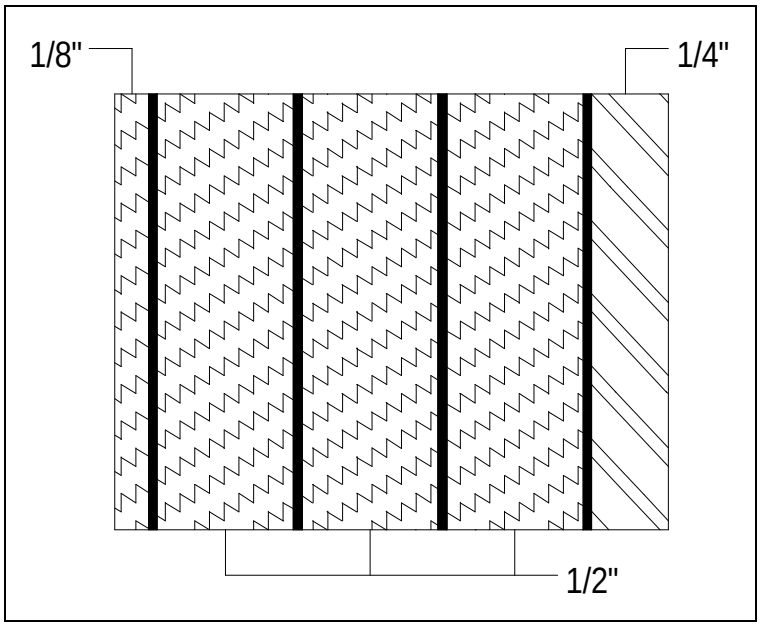


**Figure F-25**
2-1/16-inch Glass-Clad Polycarbonate

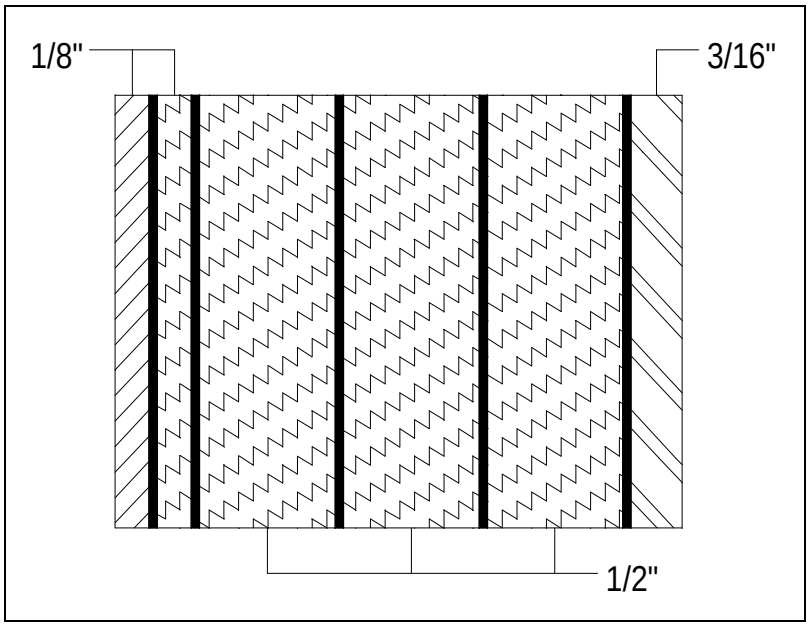


**Figure F-26**
2-1/16-inch Glass-Clad Polycarbonate

F.5 Laminated Glass. Three laminated glass cross-sections are referenced in the handbook. Figure F-27 through Figure F-29 illustrate these cross-sections.

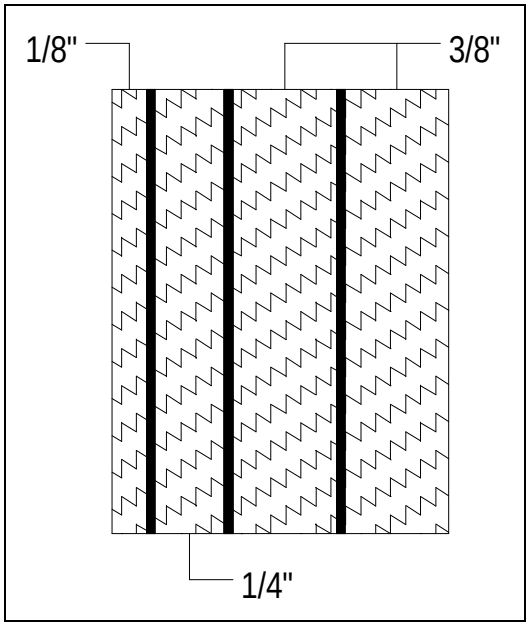


**Figure F-27**
1-3/16-inch Laminated Glass

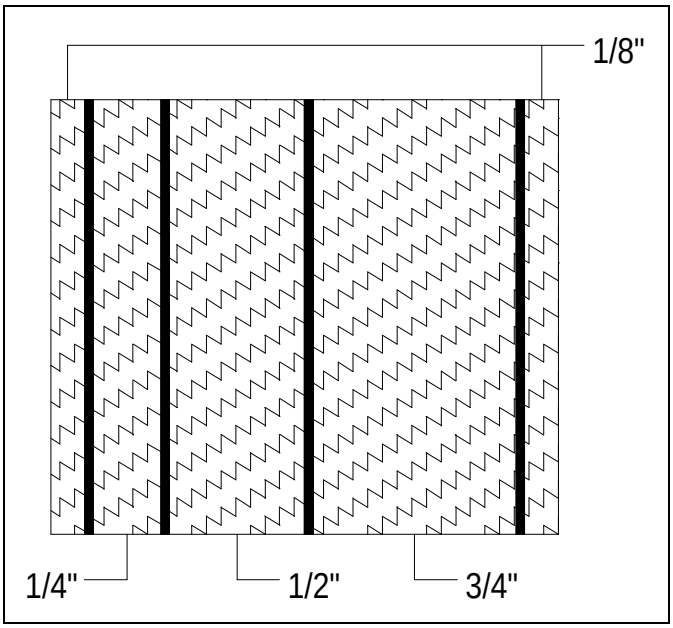


**Figure F-28**
1-3/4-inch Laminated Glass

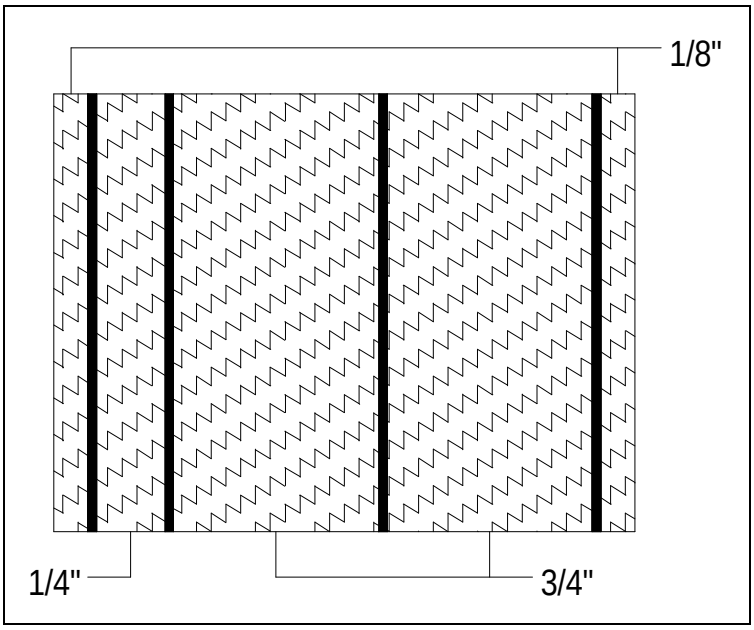


**Figure F-29**
2-inch Laminated Glass

F.6 Laminated Polycarbonate. Two laminated polycarbonate cross-sections are referenced in the handbook. Figure F-30 and Figure F-31 illustrate these cross-sections.

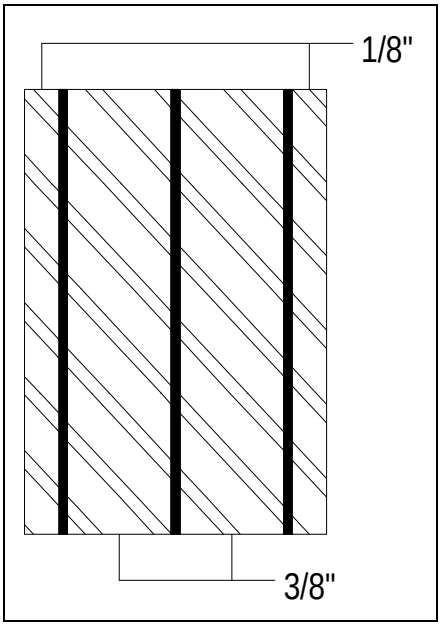


**Figure F-30**
1-inch Laminated Polycarbonate

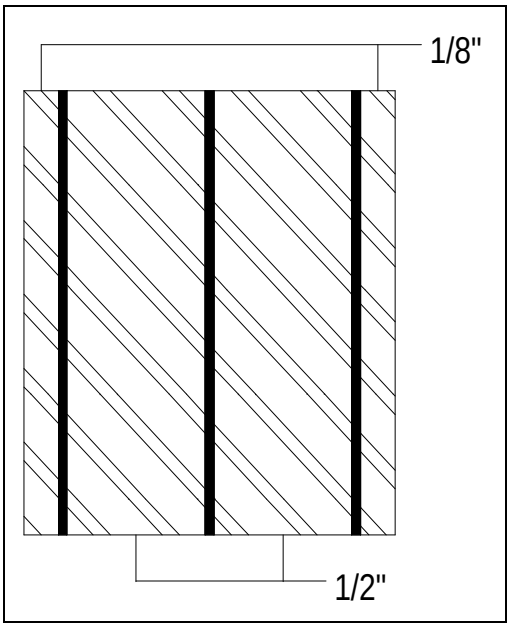


**Figure F-31**
1-1/4-inch Laminated Polycarbonate

# BIBLIOGRAPHY

Miscellaneous DOD Publications.

Department of Defense Physical Security Program, DOD 5200.8-R. Department of Defense, Washington, DC.

## NOTES

a. Department of Defense activities may obtain copies of Design Manuals and P-Publications from the following:

Commanding Officer
Naval Publications and Forms Center
5801 Tabor Avenue
Philadelphia, PA 19120

Department of Defense activities must use the Military Standard Requisitioning and Issue Procedure (MILSTRIP) using the stock control number obtained form NAVSUP Publication 2002.

b. Commercial organizations may procure Design Manuals and P-Publications from the following:

Superintendent of Documents
US Government Printing Office
Washington, DC 20420

c. Military/Federal, and NAVFAC Guide Specifications are available to all parties, free of charge, from the following:

Commanding Officer
Naval Publications and Form Center
5801 Tabor Avenue
Philadelphia, PA 19120
Telephone: DSN (DOD only): 442-3321
Commercial: (215) 697-3321

d. Technical society and technical association specification and standards are generally available for reference from libraries. They are also distributed among technical groups and partaking Federal agencies.

# REFERENCES

NOTE: THE FOLLOWING REFERENCED DOCUMENTS FORM A PART OF THIS HANDBOOK TO THE EXTENT SPECIFIED HEREIN. USERS OF THIS HANDBOOK SHOULD REFER TO THE LATEST REVISIONS OF CITED DOCUMENTS UNLESS OTHERWISE DIRECTED.

American National Standards Institute, 1430 Broadway, New York, NY, 10018.

| | |
|---|---|
| ANSI Z97.1-1984 | American National Standard for Safety Glazing Materials Used in Buildings - Safety Performance Specifications and Methods of Test |

American Society for Testing and Materials, 1916 Race Street, Philadelphia, PA 19103-1187.

| | |
|---|---|
| ASTM C1048-92 | Standard Specification for Heat-Treated Flat Glass—Kind HS, Kind FT Coated and Uncoated Glass |
| ASTM E84-95 | Standard Test Method for Surface Burning Characteristics of Building Materials |

Chief of Naval Operations available from Naval Publications and Forms Center, 5801 Tabor Avenue, Philadelphia, PA 19120.

| | |
|---|---|
| OPNAVINST 3300.53 | Department of the Navy Combating Terrorism Program |
| OPNAVINST 3300.54 | Department of the Navy Protection of Navy Personnel and Activities Against Acts of Terrorism and Political Turbulence |
| OPNAVINST 5510.1H | Department of the Navy Information and Personnel Security Program Regulation |
| OPNAVINST 5530.13B | Department of the Navy Physical Security Instruction for Conventional Arms, Ammunition, and Explosives (AA&E) |
| OPNAVINST 5530.14B | Department of the Navy Physical Security and Loss Prevention Manual |
| OPNAVINST 5530.15 | Department of the Navy Physical Security Program |
| OPNAVINST C8126.1A | Department of the Navy Nuclear Weapon Security Manual |

Department of Defense Publications available from Superintendent of Documents, U.S. Government Printing Office, Washington, DC 20402.

| | |
|---|---|
| DOD 5100.76-M | Physical Security of Conventional Arms, Ammunition, and Explosives |

Department of State Publications, Fullerton Industrial Park, 7942 Angus Court, Springfield, Virginia 22153.

| | |
|---|---|
| SD-STD-01.01 | Physical Security of Conventional Arms, Ammunition, and Explosives |

H.P. White Laboratory, Inc. Publications, 3114 Scarboro Road, Street, Maryland 21154.

| | |
|---|---|
| HPW-TP-0100.00 | Transparent Materials and Assemblies for Use in Force Entry or Containment Barriers |

National Institute of Justice Publications, avaliable from the National Criminal Justice Reference Service (NCJRS), Washington, DC 20531.

| | |
|---|---|
| NIJ Standard 0108.01 | Ballistic Resistant Material |

Naval Facilities Engineering Command Publications available from Naval Publications and Forms Center, 5801 Tabor Avenue, Philadelphia, PA 19120.

| | |
|---|---|
| P-397 | Structures to Resist the Effects of Accidental Explosions |
| P-442 | Economic Analysis Handbook |
| MIL-HDBK-1013/1A | Design Guidelines for Physical Security of Facilities |
| MIL-HDBK-1013/4 | Instruction for Design Fabrication and Construction/ Installation of Secure |
| MIL-HDBK-1013/5 | Structures |
| MIL-HDBK-1013/6 | Steel Ply Wall Hardening Selection and Installation |
| MIL-HDBK-1013/10 | High Security Internal Locking System Description, Operation, and Maintenance |
| MIL-HDBK-1013/11 | Design Guidelines for Security Fencing, Gates, Barriers and Guard Facilities |

| | |
|---|---|
| | Instruction for Planning and Design of High Security Magazine Door Construction Projects |

Naval Facilities Engineering Service Center (NFESC) Publications, Port Hueneme, CA 93043.

| | |
|---|---|
| TM-2044-SHR | Forced Entry Test on Security Glazing Systems |
| TR-908 | Security Requirements for Structural Elements used in Secure Structures |

Underwriter's Laboratories, Inc. Publications, 333 Plingsten Road, Northbrook, IL 60062-2096.

| | |
|---|---|
| UL 752 | Standard for Bullet-Resisting Equipment |

United States Army Corps of Engineers Publications, 215 North 17th Street, Omaha, NE 68102-4978.

| | |
|---|---|
| Army TM 5-853-1 | Security Engineering Project Development |
| CEGS-08850 | Fragment Retention Film for Glass |
| ETL 1110-1-136 | Engineering and Design: Fragment Retention Film for Glass |

# GLOSSARY

Annealed Glass: glass which has been subjected to a controlled cooling process to reduce thermal residual stress to a commercially acceptable level.

Aspect Ratio: the ratio between the largest opening dimension and the smallest opening dimension.

Asymmetrical Construction: see non-symmetrical.

Blast Parameters: the primary variables which characterize a blast pressure wave (incident and reflected overpressure, incident and reflected impulse), each calculated at a specific point.

Bending Stress: a stress system that simultaneously imposes a compressive component at one surface, graduating to an imposed tensile component at the opposite surface of a glass section.

Bite: in building construction, the dimension by which the frame or flange of a gasket overlaps the edge of the glass or panel.

Block, Setting: a small piece of neoprene or other suitable and compatible material used to position the glass in the frame.

Building Codes: documents which prescribe acceptable building practices.

Channel: a three-sided, U-shaped opening in a sash or frame to receive a lite or panel.

Channel Depth: the distance from the bottom of the channel to the top of the stop, or distance from sight line to base of channel.

Chemically Strengthened: glass that has been ion-exchanged to produce a compressive stress layer at the treated surface.

Cube Root Scaling: the concept of representing a bomb by scaled distance varying inversely as the cube root of explosive weight. Cube root scaling is the analytic basis for most blast wave calculations.

Dead Load: the weight of the glazing product itself.

Delamination: a condition in which one or more lites of glass or polycarbonate lose their bond with an interlayer.

Durometer: a gauge to measure hardness. See “shore hardness.”

Elastomer: an elastic, rubber-like substance such as natural or synthetic rubber.

Face-on: see “reflected overpressure” and “reflected impulse.”

Fully Tempered Glass: heat-treated glass which has a high degree of temper (ANSI Z97.1-1984 and ASTM-C1048-92).

Glass: an inorganic product of fusion that has cooled to a ridged condition without crystallizing.

Glass-Clad Polycarbonate: one or more lites of flat glass bonded with an aliphatic urethane interlayer to one or more sheets of polycarbonate in a pressure/temperature/vacuum laminating process. PVB may be used to bond glass to glass.

Glazing: glass or other transparent material installed in or on a building as a window.

Hardening: the conscious use of construction materials, techniques or designs which increase security integrity by providing greater delay time against forced entry attack, greater penetration resistance against ballistic attack, or greater capability to resistance peak reflected overpressures and impulses due to a blast attack.

Heat Strengthened Glass: glass that has been subjected to a thermal treatment characterized by rapid cooling to produce an intermediate level compressively stressed surface layer. The surface layer is somewhat less stressed than layers found in tempered glass (ASTM C1048-90).

Heat Treatment: the tempering process which is used to increase the strength of annealed glass.

Incident Impulse: the impulse (area under the overpressure-time curve) of the incoming blast pressure wave unimpeded by solid objects.

Incident Overpressure: the overpressure associated with the incoming blast pressure wave unimpeded by solid objects. Incident overpressure is sometimes referred to as side-on or free stream overpressure.

Insulating Glass Unit: two glass lites separated and joined by a perimeter spacer which seals the enclosed airspace.

Interlayer: a material specifically developed for bonding glass lites, polycarbonate lites, or glass and polycarbonate lites together.

Interlayer Thickness: the thickness of the plastic interlayer (e.g., 0.030, 0.060, or 0.090 inch).

Laminate: composite unit of glass or polycarbonate and interlayer material.

Laminated Glass: two (or more) plies of glass bonded together with a PVB interlayer.

Lite or Light: a single piece of glazing material, monolithic or laminated.

Monolithic Glass: a single piece of glass.

Negative Impulse: the brief period of partial vacuum which follows the pressure increase at the beginning of the blast pressure wave. The negative impulse is the product of the negative pressure (vacuum) and its duration.

Negative Phase Duration: the length of time during which the explosion creates a partial vacuum at a particular point.

Non-Symmetrical: construction of a glass-clad polycarbonate such that the cross-section is not a symmetrical distribution of type and thickness of glass, polycarbonate, and interlayer.

Overpressure: the increase in atmospheric pressure at a point when the blast pressure wave arrives at that point.

Ply: layer of material in a laminated glazing construction.

Plate: a group of glazing plies which have the same mechanical properties. Ply thickness may vary and interlayers are ignored.

Plate Glass: flat glass formed by a rolling process, ground and polished on both sides, with surfaces essentially plane and parallel.

Positive Phase Duration: the interval during the blast event in which the pressure at a point is higher than the ambient atmospheric pressure.

PVB: polyvinyl butyral interlayer material used to bond glass to glass.

Reflected Impulse: the impulse measured at the surface of a rigid object as a result of normal incidence with a blast pressure wave.

Reflected Overpressure: the overpressure measured at the surface of a rigid object as a result of normal incidence with a blast pressure wave. The reflected overpressure is often referred to as face-on overpressure.

Scratch-Resistant Coating: coating applied to glazing surfaces to reduce the effects of frictive contact.

Sealant: compound used to fill and seal a joint or opening.

Side-On: see “incident overpressure” and “incident impulse.”

Shore Hardness: measure of firmness of a compound by means of a Durometer Hardness Gauge.

Stop, Removable: the removable molding or structural element of the glazing channel that retains the lite or panel in place.

Stop, Stationary: the lip of a glazing channel or rabbet which is a permanent structural element of the frame and retains the glazing within it.

Surfaces: surfaces of a glazing laminate are counted from the exterior (threat) face to the interior (protected) face.

Symmetrical: a term used to describe a laminate comprised of glass, polycarbonate, and interlayer constructed so that all

materials (types and thickness) are uniformly distributed around its neutral axis.

Symmetrical Insulating Glass Unit: an insulating glass unit which has lites of equal thickness and identical heat treatment.

Temper: the degree of residual stress on annealed glass measured polarimetrically or by polariscopic comparison with a standard such as one or more strain disks.

Tempered Glass: glass that has been subjected to a thermal treatment characterized by rapid cooling to produce a comparatively stressed surface layer. See “Fully Tempered Glass” and “Heat Strengthened Glass.”

TNT-Equivalent Weight: the weight of a particular explosive which produces an explosion similar to 1 pound of TNT.

Tool Mix: group of tools and explosives used in forced entry attacks. Qualifying tool categories for each design basis threat severity level are specified in Table D-30.

Urethane, Aliphatic: thermoplastic interlayer required to bond polycarbonate lite to polycarbonate or glass lite.

Venting: the relief of overpressure in confined volumes through the release of air to a larger volume. An open window helps to vent an explosion.

# INDEX

## A

Acrylic ..... 17
Action
    Repeat ..... 228
Action Table ..... 228
Aggressor
    Categories ..... 31
    Characteristics ..... 31
    Identify ..... 193
    Objectives ..... 31
    Threats and Tactics ..... 2, 30–34
Anchor
    Embedded ..... 27
    Expansion Sleeve ..... 27
Anchor Bolts
    Type ..... 27
Anchorage ..... 26
Annealed Glass ..... *See* Glass, Annealed
Application
    Evaluation ..... 34
    Selection ..... 34
Aspect Ratio ..... 307
Asset
    Accessibility ..... 203
    Availability ..... 200
    Categories ..... 175
    Identification ..... 178
    Profile ..... 197
    Relative Asset Value ..... 184
        AA&E ..... 184
        Controlled Medical Substances ..... 186
        People ..... 187
    Replaceability ..... 183
    Types ..... 175
    Usefulness to Aggressor ..... 197
        Aggressor's Goals ..... 200
        Cash Value ..... 197
        Publicity Value ..... 200
Assets ..... 175–90
    Example ..... 229
Asymmetrical Construction ..... *See* Construction, Asymmetrical

B

Ballistic Resistant Glazing ..... 2
Bending Stress ..... 307
Bite ..... 307
Blast Parameters ..... 307
Blast Resistant Glazing ..... 2, 59–66
Block, Setting ..... 307
Brick Wall ..... *See* Wall, Brick
Building Codes ..... 307

C

Channel ..... 307
    Depth ..... 307
Chemically Strengthened ..... 307
Chemically Treated Glass ..... *See* Glass, Chemically Treated
Concrete Block Wall ..... *See* Wall, Concrete Block
Concrete Wall ..... *See* Wall, Concrete
Construction
    Asymmetrical ..... 307
Cost Analysis ..... 3, 80–93
Criticality
    Military's Mission ..... 182
    User's Mission ..... 182
Cross-Section
    Modifying to Avoid Failure ..... 169
    Modifying to Avoid Overdesign ..... 170
Cross-sections ..... 11, 283–301
    Air-gap ..... 23, 284
    Asymmetrical ..... 22
    Extruded Ionomer ..... 288
    Glass-Clad Polycarbonate ..... 289
    Insulated ..... 23
    Laminated ..... 17
    Laminated Glass ..... 298
    Laminated Polycarbonate ..... 300
    Monolithic ..... 12
    Symmetrical ..... 22
Cube Root Scaling ..... 308

D

Dead Load ..... 308
Delamination ..... 308
Design Basis Threat
    Example ..... 238

Design Basis Threat ..... 191–218
Deterrence ..... 209
Durometer ..... 308

E

Elastomer ..... 308
Environmental Analysis ..... 3, 76–80
Example
    Assets ..... 229
    Design Basis Threat ..... *See* Design Basis Threat
    Level of Protection ..... *See* Level of Protection
    System Analysis ..... *See* System Analysis

F

Face-on ..... 308
Fasteners ..... *See* Frame, Fasteners
Film
    Fragment Retention ..... 19
    Protective ..... 19
    Safety ..... 19
    Security ..... 19
Forced Entry Resistant Glazing ..... 2
Fragment Retention Film ..... 19
Frame ..... 23
    Attack Resistance ..... 25
        Ballistic..... 26
        Blast..... 26
        Forced Entry..... 25
    Environmental Effects ..... 26
    Fasteners ..... 25
    Main ..... 24
    Subframe ..... 24
    Systems ..... 24
Fully Tempered Glass ..... *See* Glass, Fully Tempered

G

Glass ..... 308
    Annealed ..... 307
    Annealed ..... 12
    Chemically Treated ..... 14
    Fully Tempered ..... 308
    Heat Strengthened ..... 13, 309
    Laminated ..... 298, 309
    Monolithic ..... 309
    Plate ..... 310

Tempered ..... 311
Thermally Tempered ..... 12, 20
Wire-reinforced ..... 16
Glass-Clad Ionomer ..... *See* Ionomer
Glass-Clad Polycarbonate ..... *See* Polycarbonate, Glass-Clad
Glazing ..... 308
Ballistic Resistant ..... 48–58
Forced Entry Resistant ..... 67–76
Glazing System Overview ..... 2, 9–30
Glazing Tape ..... 25

H

Handbook, Using ..... 4
Hardening ..... 308
Heat Strengthened Glass ..... *See* Glass, Heat Strengthened
Heat Treatment ..... 309

I

Incident Impulse ..... 309
Incident Overpressure ..... 309
Incidents
Future ..... 203
Past
Local ..... 201
Nearby ..... 202
Information Sensitivity ..... 173
Insulating Glass Unit ..... 309
Symmetrical ..... 311
Interlayer ..... 17, 309
PVB ..... 19
Thickness ..... 309
Urethane ..... 19
Introduction ..... 1–9
Ionomer ..... 23, 288

L

Laminate ..... 309
Laminated Cross-sections ..... *See* Cross-sections, Laminated
Laminated Glass ..... *See* Glass, Laminated
Law Enforcement ..... 209
Level of Protection ..... 219–27
Example ..... 250
Levels of Protection
Ballistic Attack Resistance ..... 49
Bomb Attack Resistance ..... 59

Forced Entry Attack Resistance ..... 67
Light ..... *See* Lite
Likelihood Rating ..... 210
Lite ..... 309

M

Main Frame ..... *See* Frame, Main
Monolithic Glass ..... *See* Glass, Monolithic

N

Negative Impulse ..... 310
Negative Phase Duration ..... 310
Non-Symmetrical ..... 310

O

Overpressure ..... 310

P

Planning ..... 171–74
Plate Glass ..... *See* Glass, Plate
Ply ..... 310
Polycarbonate ..... 16
Fused ..... 21
Glass-Clad ..... 21, 289
Laminated ..... 21, 300
Positive Phase Duration ..... 310
Procedure
Algorithm Data Entry ..... 132
Algorithm Data Preparation ..... 124
Applicable Tactics and Severity Levels Identification ... 211
Asset Identification ..... 178
Assets ..... 175
Ballistic Resistant Glazing Evaluation ..... 49
Ballistic Resistant Glazing Selection ..... 56
Blast Resistant Glazing Evaluation ..... 61
Blast Resistant Glazing Selection ..... 64
Collateral Damage Assessment ..... 221
Collateral Damage Threat Severity Level ..... 222
Cost Estimate ..... 81
Cross-Section Ballistic Resistant Thickness ..... 53
Cross-Section Cost Estimate ..... 81
Cross-Section Fabrication Cost Estimate ..... 86
Cross-Section Material Cost Estimate ..... 83
Data Entry ..... 127
Data Preparation for Evaluation Analysis ..... 121

Data Preparation for Selection Analysis ..... 134
Descriptive Text ..... 5
Design Basis Threat ..... 191
Environmental Analysis ..... 77
Evaluation Attack Analyses ..... 38
Evaluation Reconciliation ..... 43
Explosives Data Entry ..... 130
Explosives Data Preparation ..... 124
Forced Entry Resistant Glazing Evaluation ..... 74
Forced Entry Resistant Glazing Selection ..... 67
Frame Cost Estimate ..... 88
Glazing Data Entry ..... 128
Glazing Data Preparation for Evaluation Analysis ..... 121
Glazing Data Preparation for Selection Analysis ..... 137
Identification of Likely Aggressors ..... 192
Initial Cost Estimate ..... 91
Installation Cost Estimate ..... 90
Laminated Glass Environmental Analysis ..... 80
Level of Protection ..... 219
Likelihood of Aggression ..... 195
Planning ..... 172
Plate Data Preparation ..... 166
Polycarbonate Environmental Analysis ..... 78
Primary Asset Value Assessment ..... 178
Process Chart ..... 5
Reconciliation for Selection ..... 41
Requirements Revision ..... 44
Results Analysis ..... 167
Safevue Evaluation Analysis ..... 119
Safevue Selection Analysis ..... 133
Safevue Startup ..... 126
Secondary Asset Value Assessment ..... 188
Selection Attack Analyses ..... 38
System Analysis ..... 34
System Evaluation ..... 35
System Selection ..... 35
Tactics Consolidation ..... 216
Procedures ..... 4
Organization ..... 5
Process Charts ..... 94–99
Protective Layering ..... 34
Purpose ..... 1
PVB ..... 19, 310

R

Reflected Impulse ..... 310
Reflected Overpressure ..... 310

S

Safevue ..... 119–70
    Installation ..... 119
    User's Manual ..... 119
Scope ..... 1
Scratch-resistant Coating ..... 311
Sealant ..... 25, 311
Setting Blocks ..... 25
Severity Level ..... *See* Threat Severity Level
Shore Hardness ..... 311
Side-on ..... 311
Stop
    Removable ..... 24, 311
    Stationary ..... 311
Structure
    Informational ..... 94
        Report ..... 94
        Terminal ..... 94
    Iteration ..... 97
        Do While ..... 97
        For ..... 97
    Selection ..... 96
        Case ..... 97
        Simple ..... 96
    Sequence ..... 95
        Procedural ..... 96
        Simple ..... 95
Subframe ..... *See* Frame, Subframe
Surfaces ..... 311
Symmetrical ..... 311
Symmetrical Insulating Glass Unit*See* Insulating Glass Unit, Symmetrical
System Analysis ..... 2, 34–48
    Example ..... 252

T

Taper Bolt ..... 27
Temper ..... 311
Tempered Glass ..... *See* Glass, Tempered
Thermally Tempered Glass ..... *See* Glass, Thermally Tempered
Threat Severity Level ..... 211
TNT-Equivalent Weight ..... 311

Tools, Weapons, and Explosives ..... 33

U

Urethane ..... 19
    Aliphatic ..... 312

V

Venting ..... 312

W

Wall ..... 28
    Brick ..... 29
    Concrete ..... 29
    Concrete Block ..... 29
    Wood Frame ..... 29
Wire-reinforced Glass ..... *See* Glass, Wire-reinforced
Wood Frame ..... *See* Wall, Wood Frame

CUSTODIAN
NAVY - YD2

PREPARING ACTIVITY
NAVY - YD2

PROJECT NO.
FACR-1162

# STANDARDIZATION DOCUMENT IMPROVEMENT PROPOSAL

INSTRUCTIONS

1. The preparing activity must complete blocks 1, 2, 3, and 8. In block 1, both the document number and revision letter should be given.

2. The submitter of this form must complete blocks 4, 5, 6, and 7.

3. The preparing activity must provide a reply within 30 days from receipt of the form.

NOTE: This form may not be used to request copies of documents, nor to request waivers, or clarification of requirements on current contracts. Comments submitted on this form do not constitute or imply authorization to waive any portion of the referenced document(s) or to amend contractual requirements.

| I RECOMMEND A CHANGE: | 1. DOCUMENT NUMBER<br>MIL-HDBK-1013/12 | 2. DOCUMENT DATE *(YYMMDD)*<br>*970310* |
|---|---|---|

3. DOCUMENT TITLE EVALUATION AND SELECTION ANALYSIS OF SECURITY GLAZING FOR PROTECTION AGAINST BALLISTIC, BOMB, AND FORCED ENTRY TACTICS

4. NATURE OF CHANGE *(identify paragraph number and include proposed rewrite, if possible. Attach extra sheets as needed.)*

5. REASON FOR RECOMMENDATION

## 6. SUBMITTER

| a. NAME *(Last, First, Middle Initial)* | b. ORGANIZATION | |
|---|---|---|
| c. ADDRESS *(Include Zip Code)* | d. TELEPHONE *(Include Area Code)*<br>(1) Commercial<br>(2) DSN<br>*(If applicable)* | 7. DATE SUBMITTED:<br>*(YYMMDD)* |

## 8. PREPARING ACTIVITY

| a. NAME COMMANDING OFFICER<br>NAVAL FACILITIES ENGINEERING SERVICE CENTER | b. TELEPHONE *(Include Area Code)*<br>(1) Commercial<br>(805) 982-1693 | (2) DSN<br>551-1693 |
|---|---|---|
| c. ADDRESS *(Include Zip Code)* *ATTN CODE ESC60*<br>*1100 23RD AVENUE, PORT HUENEME, CA 93043-4370* | **IF YOU DO NOT RECEIVE A REPLY WITHIN 45 DAYS, CONTACT:**<br>Defense Quality and Standardization Office<br>5203 Leesburg Pike, Suite 1403, Falls Church, VA 22041-3466<br>Telephone (703) 756-2340 DSN 289-2340 | |