INCH-POUND

MIL-HDBK-1013/14
1 FEBRUARY 1999

DEPARTMENT OF DEFENSE
HANDBOOK

# SELECTION AND APPLICATION OF VEHICLE BARRIERS

THIS HANDBOOK IS FOR GUIDANCE ONLY. DO NOT CITE THIS DOCUMENT AS A REQUIREMENT.

AMSC N/A AREA FACR

DISTRIBUTION STATEMENT A. APPROVED FOR PUBLIC RELEASE: DISTRIBUTION IS UNLIMITED.

## ABSTRACT

This handbook provides guidance to ensure that appropriate design, operational, environmental, cost, security, and safety considerations are included in the selection process for vehicle barrier systems. The handbook begins with a selection process followed by sections on vehicle barrier requirements, vehicle barrier installation and design, and, finally, descriptions and data on commercially available vehicle barriers and passive barriers that can be constructed on site. The handbook includes five supporting appendices.

The selection process guides the user through the process of selecting passive and active vehicle barriers that will protect a facility from the threat of an explosive-laden vehicle attempting to penetrate the perimeter of the facility. The section on vehicle barrier requirements covers calculations on speed, weight, and vehicle movement that lead to establishing the kinetic energy of a threat vehicle. The section on installation and design covers other important factors that must be considered during the design, selection, and installation of vehicle barriers (i.e., safety, environment, etc.) The last section covers descriptions and data on commercially available vehicle barriers that have been crash tested to demonstrate performance. Also included are a variety of passive barriers that can be used for perimeter security to provide equivalent protection at all points along the facility boundary.

The appendices provide a list of manufacturers for both active and passive vehicle barriers, examples on how to use the selection process, and cost data for both active and passive vehicle barriers. The final two appendices include a discussion on establishing standoff distance that can be used in conjunction with the selection process, and consolidated performance data for active and passive vehicle barriers.

# FOREWORD

This handbook is approved for use by the Department of the Navy and is available for use by all departments and agencies of the Department of Defense (DOD).

The purpose of this handbook is to provide information and guidance for the placement, design, selection, installation, operation, and maintenance of vehicle barriers to protect critical DOD personnel and assets against attack by explosive-laden vehicles.

Protection levels for personnel and assets are driven by the potential threat, which may change from time to time even at the same location. Therefore, a risk analysis is highly recommended to identify optimal security requirements prior to the selection of a vehicle barrier system. Refer to TM 5-853-1/AFMAN 32-1071 Vol. 1 for more information.

Beneficial comments (i.e., recommendations, additions, deletions) and any pertinent data that may be of use in improving this document should be addressed to the Naval Facilities Engineering Service Center, 1100 23rd Avenue, Port Hueneme, California, 93043-4370. Use the Standardization Document Improvement Proposal (DD Form 1426) appearing at the end of this document, or submit comments by letter.

DO NOT USE THIS HANDBOOK AS A REFERENCE DOCUMENT FOR FACILITIES CONSTRUCTION. USE IT IN THE PURCHASE AND PREPARATION OF FACILITIES PLANNING AND ENGINEERING STUDIES AND DESIGN DOCUMENTS USED FOR THE PROCUREMENT OF FACILITIES CONSTRUCTION (SCOPE, BASIS OF DESIGN, TECHNICAL REQUIREMENTS, PLANS, SPECIFICATIONS, COST ESTIMATES, REQUEST FOR PROPOSALS, AND INVITATION FOR BIDS). DO NOT REFERENCE IT IN MILITARY OR FEDERAL SPECIFICATIONS OR OTHER PROCUREMENT DOCUMENTS.

(THIS PAGE INTENTIONALLY LEFT BLANK)

# SELECTION AND APPLICATION OF VEHICLE BARRIERS

CONTENTS


| | | | Page |
|---|---|---|---|
| Section | 1 | INTRODUCTION | |
| | 1.1 | Scope | 1 |
| Section | 2 | APPLICABLE DOCUMENTS | |
| | 2.1 | General | 2 |
| | 2.2 | Government Documents | 2 |
| | 2.2.1 | Specifications, Standards, and Handbooks | 2 |
| | 2.2.2 | Other Government Documents, Drawings, and Publications | 2 |
| | 2.3 | Non-Government Publications | 3 |
| | 2.4 | Order of Precedence | 3 |
| Section | 3 | DEFINITIONS | |
| | 3.1 | Acronyms | 4 |
| Section | 4 | TECHNICAL APPROACH | |
| | 4.1 | General | 5 |
| | 4.2 | Selection and Design Issues | 5 |
| | 4.3 | Cost of Security | 5 |
| Section | 5 | VEHICLE BARRIER SELECTION PROCESS | |
| | 5.1 | General | 6 |
| | 5.2 | Standoff Distance Selection Process | 6 |
| | 5.2.1 | Initial Considerations | 6 |
| | 5.2.2 | Acceptable Damage and Injury Levels | 9 |
| | 5.2.3 | Accepting Additional Risk | 9 |
| | 5.2.4 | Site Modification Alternatives | 9 |
| | 5.2.5 | Alternative Solutions to Inadequate Standoff Distance | 10 |
| | 5.2.5.1 | Structural Hardening | 10 |
| | 5.3 | Vehicle Barrier Selection | 11 |
| | 5.3.1 | Design Parameters | 11 |
| | 5.3.2 | Performance Considerations | 11 |
| | 5.3.3 | Final Selection | 11 |
| | 5.4 | Process Summary | 11 |

| | | | Page |
|---|---|---|---|
| Section | 6 | VEHICLE BARRIER REQUIREMENTS | |
| | 6.1 | General | 12 |
| | 6.2 | Site Survey | 12 |
| | 6.3 | Integrated Physical Security System | 14 |
| | 6.4 | Attainable Vehicle Speed | 15 |
| | 6.4.1 | Attainable Vehicle Speed on a Straight Path | 15 |
| | 6.4.2 | Attainable Vehicle Speed on a Curved Path | 19 |
| | 6.4.3 | Attack Routes Parallel to the Barrier | 22 |
| | 6.5 | Vehicle Kinetic Energy | 25 |
| Section | 7 | VEHICLE BARRIER DESIGN AND INSTALLATION | |
| | 7.1 | Vehicle Barrier Types | 27 |
| | 7.1.1 | Active Barrier Systems | 27 |
| | 7.1.2 | Passive Barrier Systems | 27 |
| | 7.1.3 | Fixed Barrier Systems | 27 |
| | 7.1.4 | Portable/Movable Barrier Systems | 27 |
| | 7.2 | Design Considerations | 27 |
| | 7.2.1 | Fencing | 27 |
| | 7.2.2 | Location | 28 |
| | 7.2.3 | Aesthetics | 28 |
| | 7.2.4 | Safety | 28 |
| | 7.2.5 | Security | 29 |
| | 7.2.6 | Reliability | 29 |
| | 7.2.7 | Maintainability | 29 |
| | 7.2.8 | Cost | 29 |
| | 7.2.9 | Barrier Operations | 30 |
| | 7.2.10 | Clear Zones | 30 |
| | 7.2.11 | Environment | 30 |
| | 7.2.12 | Installation Requirements | 30 |
| | 7.2.13 | Operator Training | 30 |
| | 7.2.14 | Options | 31 |
| | 7.2.15 | Operational Cycle | 31 |
| | 7.2.16 | Methods of Access Control | 31 |
| | 7.2.17 | Cost Effectiveness | 31 |
| | 7.2.18 | Liabilities | 33 |
| | 7.3 | Actions to Avoid | 33 |
| | 7.4 | Barrier Capability | 33 |
| | 7.5 | Vehicle Barrier Selection Checklist | 34 |

| | | | Page |
|---|---|---|---|
| Section | 8 | ACTIVE AND PASSIVE VEHICLE BARRIERS | |
| | 8.1 | Active Barrier Systems | 36 |
| | 8.1.1 | Crisp and Associates Vehicle Surface Barrier | 36 |
| | 8.1.1.1 | Description | 36 |
| | 8.1.1.2 | Testing | 36 |
| | 8.1.2 | Delta Scientific Vehicle Barricade System | 38 |
| | 8.1.2.1 | Description | 38 |
| | 8.1.2.2 | Testing | 38 |
| | 8.1.3 | Delta Scientific Bollard Systems | 40 |
| | 8.1.3.1 | Description | 40 |
| | 8.1.3.2 | Testing | 41 |
| | 8.1.4 | Delta Scientific Crash Beam Barrier System | 43 |
| | 8.1.4.1 | Description | 43 |
| | 8.1.4.2 | Testing | 44 |
| | 8.1.5 | Delta Scientific Linear Crash Gate System | 44 |
| | 8.1.5.1 | Description | 44 |
| | 8.1.5.2 | Testing | 46 |
| | 8.1.6 | Nasatka Maximum Security Barrier (NMSB) | 46 |
| | 8.1.6.1 | Description | 46 |
| | 8.1.6.2 | Testing | 51 |
| | 8.1.7 | OMNISEC Defender Bollard | 51 |
| | 8.1.7.1 | Description | 51 |
| | 8.1.7.2 | Testing | 53 |
| | 8.1.8 | OMNISEC Magnum Vehicle Barrier | 53 |
| | 8.1.8.1 | Description | 53 |
| | 8.1.8.2 | Testing | 55 |
| | 8.1.9 | OMNISEC Portapungi | 55 |
| | 8.1.9.1 | Description | 55 |
| | 8.1.9.2 | Testing | 57 |
| | 8.1.10 | OMNISEC SEMA-4 High-Impact Crash Beam | 57 |
| | 8.1.10.1 | Description | 57 |
| | 8.1.10.2 | Testing | 58 |
| | 8.1.11 | TYMETAL Fortified Impact Gate System | 58 |
| | 8.1.11.1 | Description | 58 |
| | 8.1.11.2 | Testing | 58 |
| | 8.1.12 | Mandell Armor CUTLASS | 58 |
| | 8.1.12.1 | Description | 58 |
| | 8.1.12.2 | Testing | 59 |
| | 8.2 | Passive Barrier Systems | 59 |
| | 8.2.1 | Concrete-Filled Bollard | 60 |
| | 8.2.1.1 | Description | 60 |

| | | Page |
|---|---|---|
| 8.2.1.2 | Testing | 61 |
| 8.2.2 | Concrete Median | 61 |
| 8.2.2.1 | Description | 61 |
| 8.2.2.2 | Testing | 61 |
| 8.2.3 | Concrete Planter | 63 |
| 8.2.3.1 | Description | 63 |
| 8.2.3.2 | Testing | 64 |
| 8.2.4 | Excavations and Ditches | 64 |
| 8.2.4.1 | Description | 64 |
| 8.2.4.2 | Testing | 64 |
| 8.2.5 | Guardrails | 66 |
| 8.2.5.1 | Description | 66 |
| 8.2.5.2 | Testing | 67 |
| 8.2.6 | Heavy Equipment Tires | 67 |
| 8.2.6.1 | Description | 67 |
| 8.2.6.2 | Testing | 67 |
| 8.2.7 | Tire Shredders | 68 |
| 8.2.7.1 | Description | 68 |
| 8.2.7.2 | Testing | 69 |
| 8.2.8 | King Tut Blocks | 69 |
| 8.2.8.1 | Description | 69 |
| 8.2.8.2 | Testing | 70 |
| 8.2.9 | Steel Cable Barriers | 70 |
| 8.2.9.1 | Description | 70 |
| 8.2.9.2 | Testing | 70 |
| 8.2.10 | Steel Cable-Reinforced Chain Link Fencing | 70 |
| 8.2.10.1 | Description | 70 |
| 8.2.10.2 | Testing | 72 |
| 8.2.11 | Reinforced Concrete Inverted “T” Walls | 79 |
| 8.2.11.1 | Description | 79 |
| 8.2.11.2 | Testing | 80 |
| 8.2.12 | Plastic Barrier Systems | 80 |
| 8.2.12.1 | Description | 80 |
| 8.2.12.2 | Testing | 80 |
| 8.2.13 | Expedient Barrier Systems | 81 |
| 8.3 | Vehicle Barrier Performance | 81 |

| | | | Page |
|---|---|---|---|
| Section | 9 | NOTES | |
| | 9.1 | Intended Use | 82 |
| | 9.2 | Subject Term (Key Word) Listing | 82 |

APPENDICES

| | | | |
|---|---|---|---|
| APPENDIX | A | LIST OF MANUFACTURERS | |
| | A.1 | Scope | 83 |
| | A.1.1 | Scope | 83 |
| | A.2 | Applicable Documents | 83 |
| | A.3 | Definitions | 83 |
| | A.4 | Manufacturers of Active Barriers | 83 |
| | A.5 | Manufacturers of Passive Barriers | 84 |
| APPENDIX | B | EXAMPLES FOR PROTECTION AGAINST TERRORIST VEHICLE BOMBS | |
| | B.1 | Scope | 85 |
| | B.1.1 | Scope | 85 |
| | B.2 | Applicable Documents | 85 |
| | B.2.1 | Non-Government Publications | 85 |
| | B.3 | Definitions | 85 |
| | B.4 | Examples | 85 |
| | B.4.1 | Example 1 | 85 |
| | B.4.2 | Example 2 | 88 |
| APPENDIX | C | COST DATA FOR ACTIVE AND PASSIVE VEHICLE BARRIERS | |
| | C.1 | Scope | 89 |
| | C.1.1 | Scope | 89 |
| | C.2 | Applicable Documents | 89 |
| | C.2.1 | Non-Government Publications | 89 |
| | C.3 | Definitions | 89 |
| | C.4 | Active Barriers | 89 |
| | C.4.1 | DOS Ratings for Active Barriers | 89 |
| | C.4.2 | Cost Data for Active Barriers | 91 |
| | C.5 | Passive Barriers | 92 |
| | C.5.1 | Cost Data for Passive Barriers | 92 |

| | | | Page |
|---|---|---|---|
| APPENDIX | D | ESTABLISHING STANDOFF DISTANCE | |
| | D.1 | General | 93 |
| | D.2 | Building Performance Levels | 93 |
| | D.2.1 | Possible Collapse | 93 |
| | D.2.2 | Non-Repairable | 93 |
| | D.2.3 | Extended Disruption, Repairable | 94 |
| | D.2.4 | Repairable | 94 |
| | D.2.5 | Quickly Repairable | 94 |
| | D.2.6 | Essentially Operable | 94 |
| | D.3 | Range of Threats | 94 |
| | D.3.1 | Maximum Event | 94 |
| | D.3.2 | Controlling Event | 95 |
| | D.3.3 | Design Events | 95 |
| | D.3.3.1 | Example | 95 |
| | D.4 | Blast Effects | 95 |
| | D.4.1 | Components of an Explosion | 96 |
| | D.4.1.1 | Shock Wave | 96 |
| | D.4.1.2 | Ground Motion and Cratering | 97 |
| | D.4.1.3 | Fragmentation | 97 |
| | D.4.1.4 | Fire | 97 |
| | D.4.1.5 | Confined Detonation | 98 |
| | D.4.2 | Blast Effects From Distant Explosions | 98 |
| | D.4.3 | Combined Damage Mechanisms | 102 |
| | D.4.4 | Pressure Effects on Structures and Glazing | 102 |
| | D.4.5 | Blast Loading for Close Detonations to Structures | 102 |
| | D.5 | Blast Damage Analysis | 104 |
| | D.5.1 | Blast Damage Effects | 104 |
| | D.5.2 | Blast Injury to Personnel | 105 |
| | D.5.2.1 | Effects of a Blast Wave | 105 |
| | D.5.2.2 | Injury From a Blast Wave | 105 |
| | D.5.2.3 | Injury From Drag Forces and Debris | 106 |
| | D.5.3 | Evaluation of Blast Damage to Structures | 108 |
| | D.5.4 | Damage Potential | 109 |
| | D.5.5 | General Building Construction | 110 |
| | D.5.6 | General Guide for Building Damage | 111 |
| | D.5.7 | Estimation of Window Damage | 112 |
| | D.6 | Blast Mitigation | 113 |

| | | | Page |
|---|---|---|---|
| APPENDIX | E | PERFORMANCE DATA FOR ACTIVE AND PASSIVE VEHICLE BARRIERS | |
| | E.1 | Scope | 114 |
| | E.1.1 | Scope | 114 |
| | E.2 | Definitions | 114 |
| | E.3 | Active Barriers | 114 |
| | E.3.1 | Performance Data for Active Barriers | 114 |
| | E.4 | Passive Barriers | 116 |
| | E.4.1 | Performance Data for Passive Barriers | 116 |

Page

FIGURES


| | | | |
|---|---|---|---|
| Figure | 1 | Standoff Distance Selection Flowchart | 7 |
| Figure | 2 | Vehicle Barrier Selection Flowchart | 8 |
| Figure | 3 | Example Site Layout | 13 |
| Figure | 4 | Integrated Physical Security System | 14 |
| Figure | 5 | Vehicle Speed vs. Acceleration Distance | 16 |
| Figure | 6 | Speed Correction Factor for Vehicles Driving on a Sloped Path | 18 |
| Figure | 7 | Skid Speed vs. Radius of Curvature | 21 |
| Figure | 8 | Correction Factor for Vehicle Traveling Parallel to Barrier (Based on Coefficient of Friction, f = 0.5) | 23 |
| Figure | 9 | Correction Factor for Vehicle Traveling Parallel to Barrier (Based on Coefficient of Friction, f = 0.9) | 24 |
| Figure | 10 | Vehicle Surface Barrier | 37 |
| Figure | 11 | Delta TT205, TT207, and TT207S High-Security Barricade System | 38 |
| Figure | 12 | Delta TT207FM High-Security Barricade System (Flush-Mounted) | 39 |
| Figure | 13 | Delta Models TT203 and TT210 Bollard Systems | 41 |
| Figure | 14 | Delta Models TT212 and TT212E Cable-Reinforced Crash Beams | 43 |
| Figure | 15 | Delta Model TT280 Linear Crash Gate | 45 |
| Figure | 16 | NMSB II Vehicle Barrier | 47 |
| Figure | 17 | NMSB IV Vehicle Barrier | 48 |
| Figure | 18 | NMSB IIIb Vehicle Barrier | 49 |
| Figure | 19 | NMSB XI Vehicle Barrier | 50 |
| Figure | 20 | OMNISEC Defender Vehicle Barrier System | 52 |
| Figure | 21 | OMNISEC Magnum Vehicle Barrier | 54 |
| Figure | 22 | Portapungi Vehicle Barrier | 56 |
| Figure | 23 | SEMA-4 Vehicle Barrier System | 57 |
| Figure | 24 | Mandell Armor CUTLASS Vehicle Barrier | 59 |
| Figure | 25 | Construction Details for Bollards | 60 |
| Figure | 26 | Precast Non-Reinforced Concrete Median | 62 |
| Figure | 27 | Reinforced Concrete Planter | 63 |
| Figure | 28 | Excavations, Berms, and Ditches | 65 |
| Figure | 29 | Guardrails | 66 |
| Figure | 30 | Heavy Equipment Tire Barrier | 67 |
| Figure | 31 | Tire Shredders | 68 |

| | | | Page |
|---|---|---|---|
| Figure | 32 | Concrete Blocks | 69 |
| Figure | 33 | Steel Cable Barriers | 71 |
| Figure | 34 | Cable-Reinforced Fence Details | 73 |
| Figure | 35 | Cable-Reinforced Fence Details (Continued) | 74 |
| Figure | 36 | Gate Detail | 75 |
| Figure | 37 | U-Bolt at Linepost Detail | 76 |
| Figure | 38 | Gate Opening Detail | 77 |
| Figure | 39 | U-Bolt at Cable Anchor Post Detail | 78 |
| Figure | 40 | Wire Rope Clamp Detail | 78 |
| Figure | 41 | Reinforced Concrete Inverted “T” | 79 |
| Figure | 42 | Commercially Available Plastic Barrier System | 80 |
| Figure | B-1 | Site Plan for Examples | 87 |
| Figure | D-1 | Blast Pressure Wave | 97 |
| Figure | D-2 | Effects of a Blast Wave on a Building | 99 |
| Figure | D-3 | Pressure Effects on a Structure for Close-In Explosion | 103 |


TABLES


| | | | |
|---|---|---|---|
| Table | 1 | Speed Correction Factor for a Vehicle Traveling Parallel to Barrier (Based on Friction Coefficient = 1.0) | 25 |
| Table | 2 | Kinetic Energy Developed by Vehicle, ft-lbf (kgf-m) x 1,000 | 26 |
| Table | 3 | Options Available for Certified Active Barriers | 32 |
| Table | 4 | Vehicle Barriers Available From Crisp and Associates | 37 |
| Table | 5 | Vehicle Barricades Available From Delta Scientific | 40 |
| Table | 6 | Bollard Systems Available From Delta Scientific | 42 |
| Table | 7 | Cable-Reinforced Crash Beams Available From Delta Scientific | 44 |
| Table | 8 | Linear Crash Gates Available From Delta Scientific | 46 |
| Table | 9 | NMSB Vehicle Barriers Available From Nasatka | 51 |
| Table | 10 | Defender Barrier System Available From OMNISEC | 53 |
| Table | 11 | Magnum and Stinger Vehicle Barriers Available From OMNISEC | 55 |
| Table | 12 | Portapungi Vehicle Barrier Available From OMNISEC | 56 |
| Table | 13 | SEMA-4 Vehicle Barrier Available From OMNISEC | 58 |
| Table | 14 | Separation Distance (D)* for Barriers to Reduce Speed on a Straight Path in Feet (m) | 70 |
| Table | 15 | Performance of Cable Restraint Systems Based on Engineering Analysis | 72 |
| Table | C-1 | DOS-Certified Active Barriers | 90 |
| Table | C-2 | DOS Ratings | 91 |

| | | | Page |
|---|---|---|---|
| Table | C-3 | Manufacturer's Data and Cost for Certified Active Barriers | 91 |
| Table | C-4 | Cost for Passive Barriers | 92 |
| Table | D-1 | Distances in Feet (Meters) for Peak Pressure From 50- to 4,000-Pound (22.7- to 1,818-kg) Hemispherical TNT Explosions on the Surface | 100 |
| Table | D-2 | Distances in Feet (Meters) for Peak Pressure From 10,000- to 40,000-Pound (4,545- to 18,182-kg) Hemispherical TNT Explosions on the Surface | 101 |
| Table | D-3 | Damage as a Function of Pressure and Distance | 104 |
| Table | D-4 | Pressure/Lethality | 105 |
| Table | D-5 | Distances in Feet (Meters) to Produce Injury or Death for 50- to 4,000-Pound (37.7- to 1,818-kg) Bombs | 107 |
| Table | D-6 | Distances in Feet (Meters) to Produce Injury or Death for 10,000- to 40,000-Pound (4,545- to 18,182-kg) Bombs | 108 |
| Table | D-7 | Structural Damage Level Categories | 109 |
| Table | D-8 | Distances in Feet (Meters) to Produce Structural Damage for 50- to 4,000-Pound (37.7- to 1,818-kg) Bombs | 111 |
| Table | D-9 | Distances in Feet (Meters) to Produce Structural Damage for 10,000- to 40,000-Pound (4,545- to 18,182-kg) Bombs | 112 |
| Table | D-10 | Conventional Window Breakage Threshold Distances in Feet (Meters) for 50- to 40,000-Pound (37.7- to 1,818-kg Bombs | 112 |
| Table | E-1 | Performance for Active Barriers | 115 |
| Table | E-2 | Performance for Passive Barriers | 116 |

INDEX ..... 117

# Section 1: INTRODUCTION

1.1 Scope. This handbook is to be used during the engineering design of Department of Defense (DOD) facilities to ensure that engineers and security personnel select a vehicle barrier system that will optimize performance and cost.

This handbook describes a process for selection and placement of vehicle barriers, along with criteria for the design, selection, installation, operation, and maintenance of security barrier systems, that will effectively stop and/or detect penetration by explosive-laden vehicles through the perimeter of a protected area. These systems include both passive (e.g., static or non-movable) perimeter barriers and active (e.g., operational for access control) barriers at entrance portal locations. There are a wide variety of active commercial barriers and options available; therefore, the material presented in this handbook is designed to support the selection of systems offered by these commercial sources.

## Section 2: APPLICABLE DOCUMENTS

2.1 General. The documents listed below are not necessarily all of the documents referenced herein, but they are needed to fully understand the information provided by this handbook.

2.2 Government Documents

2.2.1 Specifications, Standards, and Handbooks. The following specifications, standards, and handbooks form a part of this document to the extent specified herein. Unless otherwise specified, the issues of these documents are listed in the latest issue of the Department of Defense Index of Specifications and Standards (DODISS) and supplement thereto.

HANDBOOKS

DEPARTMENT OF DEFENSE

| | |
|---|---|
| MIL-HDBK-1013/1A | Design Guidelines for Physical Security of Fixed Land-Based Facilities |
| MIL-HDBK-1013/10 | Design Guidelines for Security Fencing, Gates, Barriers, and Guard Facilities |
| MIL-HDBK-1013/12 | Evaluation and Selection of Security Glazing for Protection Against Ballistic, Bomb and Forced Entry Tactics |

(Unless otherwise indicated, copies of the above specifications, standards, and handbooks are available from the Standardization Document Order Desk, Building 4D, 700 Robbins Avenue, Philadelphia, Pennsylvania, 19111-5094.)

2.2.2 Other Government Documents, Drawings, and Publications. The following other Government documents, drawings, and publications form a part of this document to the extent specified herein.

| | |
|---|---|
| DODINST 2000.12H | Protection of Department of Defense Personnel and Assets from Acts of Terrorism |
| FM 8-9/NAVMED P5059/ AFJMAN 44-151VIV2V3 | The Handbook on the Medical Aspects of NBC Defensive Operations |
| NAVFAC P397/TM-5-1300/ AF4 88-22 - | Structures to Resist the Effects of Accidental Explosions |

| | |
|---|---|
| TM 5-853-1/AFMAN 32-1071 Vol. 1 | Security Engineering – Project Design |
| TM 5-853-2/AFMAN 32-1071 Vol. 2 | Security Engineering – Concept Design |
| TM 5-853-3/AFMAN 32-1071 Vol. 3 | Security Engineering – Final Design |
| FACEDAP 2.1, Version 1.2, 5/23/94 | Facility Component Explosive Damage Assessment Program |
| PDC-TR90-2 | BIRM – A Vehicle Barrier Impact Response Model Using Barrier VII |

(Copies of DODINST 2000.12H are available from the DOD. Copies of FM 8-9/NAVMED P5059/AFJMAN 44-151VIV2V3 are available from the Department of Army, Navy, or Air Force. Copies of NAVFAC P397/TM-5-1300/AF4 88-22 are available from the Department of Army, Navy, or Air Force. Copies of TM 5-853-1, -2, and –3/AFMAN 32-1071 Vols. 1, 2, and 3, FACEDAP 2.1 and PDC-TR90-2 are available from the Department of the Army.)

2.3 Non-Government Publications. The following documents form a part of this document to the extent specified herein. Unless otherwise specified, issues of the documents that are DOD adopted are listed in the latest issue of the DODISS and supplement thereto.

Means, R. S., "Building Construction Cost Data", 55th Edition, 1997. (Requests for copies should be addressed to the R. S. Means Company, Inc.)

Whitney, M. G., Ketchum, D. E., and Polcyn, M. A., "Blast Vulnerability Guide" (Southwest Research Institute, Project No. 06-1473-040, Prime Contract No. N00123-86-D-0299, Naval Civil Engineering Laboratory, Subcontract No. TRI87107, Tecolote Research, Inc.), October, 1987. (Requests for copies should be addressed to the Naval Facilities Engineering Service Center, 1100 23rd Avenue, Port Hueneme, California, 93041-4370.)

2.4 Order of Precedence. In the event of a conflict between the text of this document and the references cited herein, the text of this document takes precedence. Nothing in this document, however, supersedes applicable laws and regulations unless a specific exemption has been obtained.

## Section 3: DEFINITIONS

3.1 Acronyms. The acronyms used in this handbook are:

| | | |
|---|---|---|
| a) BDAM | - | Blast Damage Assessment Model |
| b) CCTV | | Closed-Circuit Television |
| b) DOD | - | Department of Defense |
| c) DODISS | - | DOD Index of Specifications and Standards |
| d) DOS | - | Department of State |
| e) ERASDAC | - | Explosive Risk and Structural Damage Assessment Code |
| f) FACEDAP | - | Facility and Component Explosive Damage Assessment Program |
| g) FRF | - | Fragment-Retention Film |
| h) MIL-HDBK | - | Military Handbook |
| i) NAVFAC | - | Naval Facilities Engineering Command |
| j) NFESC | - | Naval Facilities Engineering Service Center |
| k) NMSB | - | Nasatka Maximum Security Barrier |
| l) PDC | - | Protective Design Center |
| m) RAM | - | Reliability, Availability, and Maintainability |
| n) VSB | - | Vehicle Surface Barrier |

## Section 4: TECHNICAL APPROACH

4.1 General. This handbook provides information that will lead the user through the selection process to establish a physical barrier around any designated DOD restricted area. Guidelines in MIL-HDBK-1013/10 should be used to establish minimum requirements for perimeter barriers that can then be strengthened to counter possible attacks by explosive-laden vehicles.

4.2 Selection and Design Issues. A systems approach is used for this handbook. The principal issues that must be considered during the selection and design of a vehicle barrier include:

a) Threat Analysis. To quantify the potential threat. For example, a 15,000-pound (6,818-kilogram) vehicle traveling at 40 miles per hour (64 kilometers per hour) laden with 1,000 pounds (454 kilograms) of explosives.

b) Performance. To determine the acceptable level of injury and damage. For example, minor injuries from glass fragments and falling debris and damage to the peripheral walls are acceptable, but progressive collapse must be prevented.

c) Access Control. Procedures for controlling barrier operations (manual or card reader).

d) Requirements. Standoff distance to provide a level of protection compatible with operational needs. Passive or active barrier systems to stop the threat vehicle. Such factors as reliability and maintainability, sabotage and malfunction protection, safety, and cost effectiveness.

e) Response. Damage to the structure from blast loads developed during an explosion.

f) Liabilities. The effect potential liability could have on the decision to protect personnel against the effects of a terrorist act.

4.3 Cost of Security. Physical security cost expenditures are generally based on the value of the item to be protected and the importance of the item to national security and readiness. For protection against vehicle bombs, the cost of security is generally driven by the potential loss of human life, which frequently overrides the value of the property to be protected. Protection of personnel is usually the primary motivating factor behind a decision to use vehicle barriers and provide protection against terrorist vehicle bombs. No attempt is made in this handbook to quantify the cost of human life.

## Section 5: VEHICLE BARRIER SELECTION PROCESS

5.1 General. This section presents a recommended process for selecting a vehicle barrier for a facility that could be subject to damage from an explosive-laden vehicle attempting to penetrate the perimeter. This process is applicable to either new construction or retrofit of an existing facility. The discussions that follow are keyed to the standoff distance and vehicle barrier selection flowcharts (Figures 1 and 2).

5.2 Standoff Distance Selection Process. The approach for this process is to: (1) establish input factors required to evaluate site conditions, (2) perform the required analysis, and (3) make major YES or NO decisions. The process is repeated until the objective (final vehicle barrier design to protect against the identified threat) has been achieved.

5.2.1 Initial Considerations. At the beginning of the vehicle barrier selection process (see Start on Figure 1), four factors determine if an existing or planned facility has acceptable standoff distance available. These factors are:

a) In Step 1 of Figure 1, select the level of protection appropriate for the facility being analyzed in terms of acceptable damage and injury levels. This is determined using Tables D-5, D-6, and D-7 in Appendix D.

b. In Step 2 of Figure 1, determine the size of the expected explosive charge from established r)equirements or expected threat information from the intelligence community.

c) In Step 3 of Figure 1, determine the standoff distance requirement. This is based on the established explosive threat and the distance required to meet acceptable damage and injury levels from Tables D-5, D-6, D-8, and D-9 in Appendix D.

d) In Step 4 of Figure 1, use the input from Step 3 to determine if the site will provide sufficient standoff distance to ensure acceptable damage and injury levels.

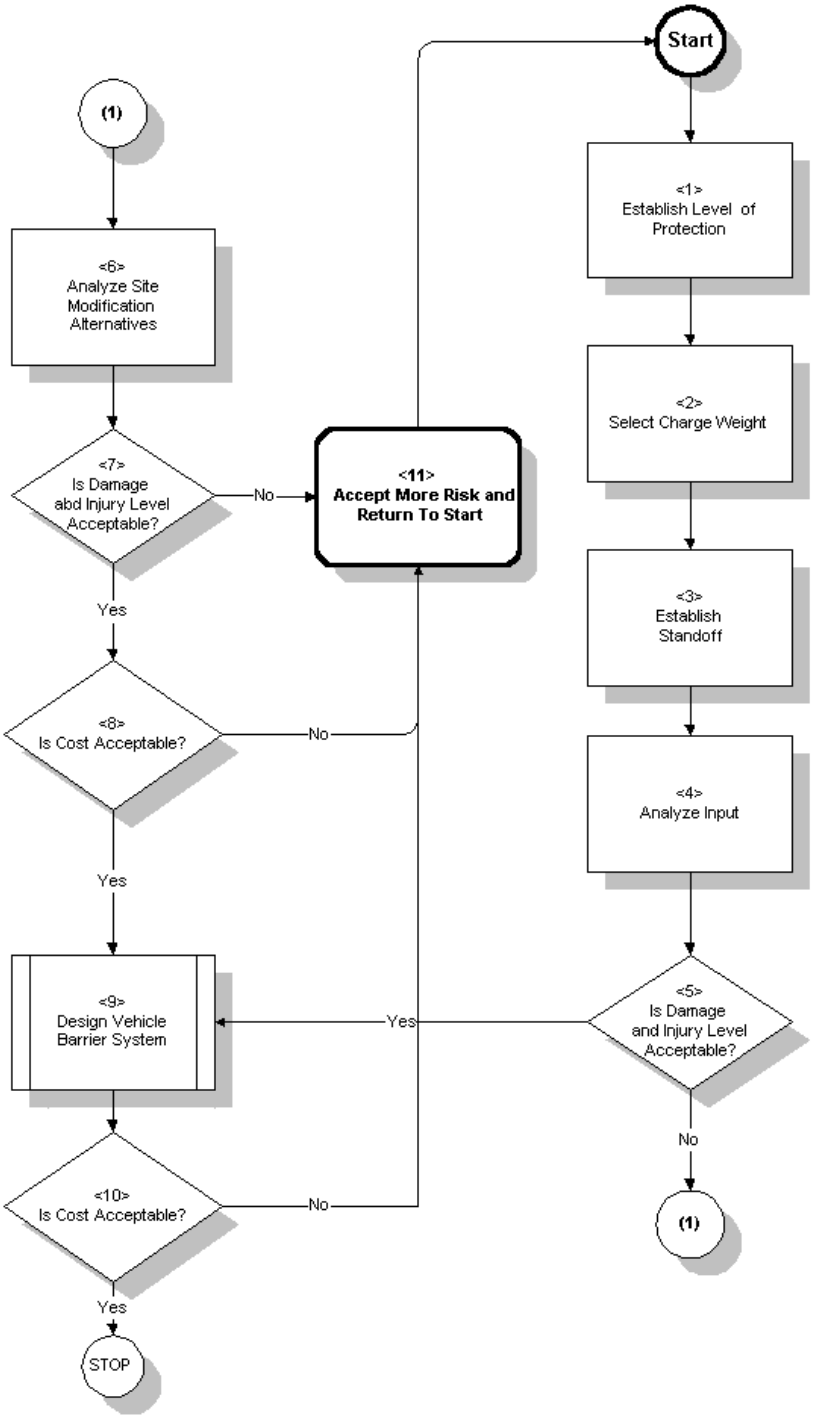


**Figure 1**
**Standoff Distance Selection Flowchart**

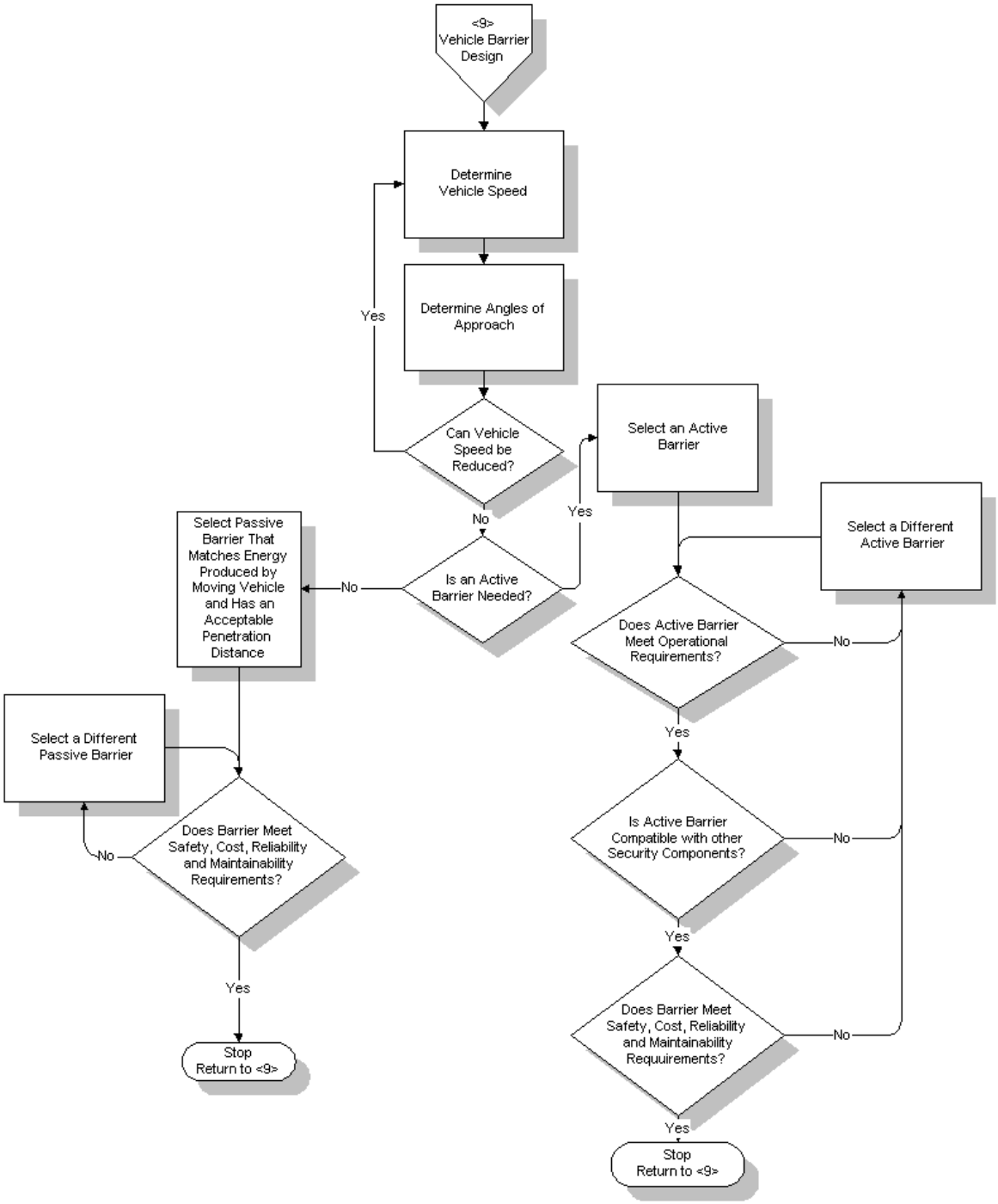


Figure 2
Vehicle Barrier Selection Flowchart

5.2.2 Acceptable Damage and Injury Levels. In Steps 5 and 7 of Figure 1, determine the expected injury levels to personnel protected by the facility and damage to the facility and if these levels can be tolerated, based on the results of Step 4 and the level of protection selected in Step 1.

For the protection of personnel, first priority should be given to those performing mission-critical functions or who are critical to mission accomplishment. One major concern is the number of personnel who could be injured or killed in the event of a terrorist incident.

The user must make decisions based on the risk involved and the probability that an incident would take place. Facilities with high exposure (i.e., close to the fence line or with little standoff distance) and high concentrations of personnel should be considered at higher risk.

High-profile or unique-process facilities that could be attractive targets to terrorist factions because of the political impact (e.g., arms, ammunition and explosive storage facilities or military headquarters buildings) should be considered at risk and considered for protection against explosive effects.

5.2.3 Accepting Additional Risk. If adequate standoff distance (Step 3 of Figure 1) or funding (Steps 8 and 10 of Figure 1) is not adequate to produce acceptable damage and injury levels (Steps 5 and 7 of Figure 1), other alternatives must be evaluated or a decision made to accept additional risk (Step 11). Willingness to accept additional risk usually decreases as the value of the asset or potential loss of personnel increases. Additional risk is usually accepted if a lower explosive threat or less standoff distance is accepted. Assuming that identified vulnerabilities have a low probability of being exploited is another way of justifying additional risk.

5.2.4 Site Modification Alternatives. In Step 6 of Figure 1, the achievable site layout is determined by the present or planned arrangement of the facilities to be protected. Structural characteristics of existing or planned facilities and the potential for expanding the site to gain more standoff distance are key factors in determining a site layout that will effectively protect a facility.

The optimum design objective is to locate threatened facilities at a distance from protected perimeters that will significantly minimize damage and injury caused by a vehicle bomb explosion. Options for meeting this objective can include one or more the following:

a) Restricting access of large vehicles to reduce traffic in the area of the facility;

b) Redirecting traffic or realigning roads so vehicles will pass further away from the facility;

c) Erecting vehicle barriers to prevent breaching of the protected perimeter;

d) Constructing a search area for vehicles entering the area;

e) Relocating truck deliveries away from the protected facility;

f) Relocating the facility or asset to a safer location;

g) Strengthening vulnerable building elements;

h) Erecting a blast wall if shown to be beneficial in reducing pressure loading on the structure.

If additional inexpensive land is available, it is usually easier and more cost effective to install vehicle barriers that will provide additional standoff distance than it is to move critical facilities (buildings) or harden (strengthen) the structures to resist explosive loading. If additional land is not available or the cost is prohibitive, the user must decide between accepting additional risk and the cost of vehicle barrier enhancements and structural hardening.

5.2.5 Alternative Solutions to Inadequate Standoff Distance. If the answer to the question, "Is the damage and injury level acceptable?" (Steps 5 and 7 of Figure 1) is NO, then consider various options for hardening the facility (Step 6 of Figure 1) or make a conscious decision to accept greater risk (Step 11 of Figure 1), based on the probability that identified vulnerabilities will not be exploited or that the event has a low probability of occurring. The impact of accepting greater risk is the design of a facility for protection against a lower explosive threat and acceptance of higher damage and injury levels at the higher threat level because of a lower probability of occurrence. The site planner must consider life-cycle issues (maintenance costs), regardless of the options selected to protect a facility.

5.2.5.1 Structural Hardening. Hardening options include structural changes to doors, windows and window frames, columns, floors, and walls impacted by the explosive blast wave. For further guidance on these issues, see NAVFAC P397/5M6-1300/AFR 88-22, FM 8-9/NAVMED P5059/AFJMAN 44-151VIV2V3, and “Blast Vulnerability Guide.” For design information on hardening of glazing systems, consult MIL-HDBK 1013/12, “Evaluation and Selection of Security Glazing for Protection against Ballistic, Bomb and Forced Entry Tactics.”

**NOTE: Structural hardening of a facility and designing the structure to prevent progressive collapse are complex engineering issues and are beyond the scope of this handbook. If additional standoff distance is not available and the potential damage to the structure from an explosive threat is unacceptable, the service of a qualified structural engineer, experienced in the design of structures to resist the effects of explosions, is highly recommended.**

5.3 Vehicle Barrier Selection. If the answer to the question, "Is the damage and injury level acceptable?" (Step 7 of Figure 1) is YES and acceptable damage and injury levels can be achieved in a cost-effective manner (Step 8 of Figure 1), then the user can proceed with the design of the vehicle barrier. To arrive at a design for the vehicle barrier system (Step 9 of Figure 1), the designer should follow the process shown in Figure 2 and described in Section 7.

5.3.1 Design Parameters. During the selection process for active or passive vehicle barriers, the following should be considered:

a) Maximum speed attainable by the threat vehicle;

b) Potential angles of approach to the barrier;

c) Configuration of the access route to the barrier to reduce vehicle speed;

d) Determination of kinetic energy developed by the threat vehicle;

e) Selection of an active and/or passive barrier to absorb the kinetic energy developed by the threat vehicle.

5.3.2 Performance Considerations. Information on performance considerations can be found in Section 7. The following should also be considered before the final selection of an appropriate barrier is made:

a) Impact on operations;

b) Operational requirements for access control (for active barriers);

c) Compatibility of the vehicle barrier with other security components;

d) Vehicle barrier aesthetics, safety, reliability, and maintainability.

5.3.3 Final Selection. The designer should now be ready to make a final selection of the vehicle barrier. Data on active and passive barriers can be found in Section 8, along with barrier descriptions and performance information. Cost information can be found in Appendix C.

5.4 Process Summary. Careful application of this process should enable the designer to select a cost-effective barrier system that will greatly enhance the protection of a vulnerable facility from terrorist vehicle bomb attacks.

## Section 6: VEHICLE BARRIER REQUIREMENTS

6.1 General. Vehicles loaded with explosives can inflict severe damage on critical military facilities, potentially injuring large numbers of DOD personnel. Vehicles are effective because they are an expedient method for transporting large quantities of explosives to any convenient location. The primary factor to consider when defending against this threat is the barrier penetration capabilities of the vehicle. Once the standoff distance for a structure has been established (based on the amount of explosives and acceptable damage and injury levels described in Appendix D), a threat vehicle should not be allowed to get close to the structure where a greater level of damage could occur.

The gross weight of a vehicle (vehicle weight plus the weight of explosives or any other cargo) and its maximum attainable speed at the point of impact produces kinetic energy that must be absorbed by the perimeter barrier to effectively stop the vehicle from getting close to the intended target. Therefore, kinetic energy can be used as the primary basis for establishing performance requirements for vehicle barriers.

6.2 Site Survey. The vehicle barrier selection and design process must always begin with a site survey. To accomplish this phase, a scaled map of the protected area must be prepared. The map should include the relative locations, major dimensions and descriptions of buildings and structures, roads, terrain and landscaping, existing security features, and property perimeter. It must also show features outside the perimeter that could be used to slow vehicle speed, prevent access to the perimeter barrier, or shield the structure from damage, if an explosion occurred. Based on this map, similar to Figure 3, distances and topographical features between the perimeter and the facility can be carefully analyzed and the required levels of protection along the perimeter and security deficiencies, if any, can be identified.

As shown in Figure 3, the individual segments of the perimeter can be attacked from a variety of paths. For example, for Building 827 with a controlled area on two sides of the perimeter, the two remaining sides (Perimeter Roads “A” and “B”) are vulnerable to a vehicle attack. Two connecting streets (Entrance Road and the extension of Perimeter Road “B”), each a potential attack path, are perpendicular and lead directly to the compound boundary. Certain segments of the perimeter can be attacked from more than one street. In addition, for Perimeter Roads “A” and “B”, running parallel to the perimeter, there are an infinite number of impact points and angles depending upon vehicle location and speed. As a result, a large number of potential impact conditions (the combination of vehicle speed and impact angles) can occur at any point along the perimeter boundary.

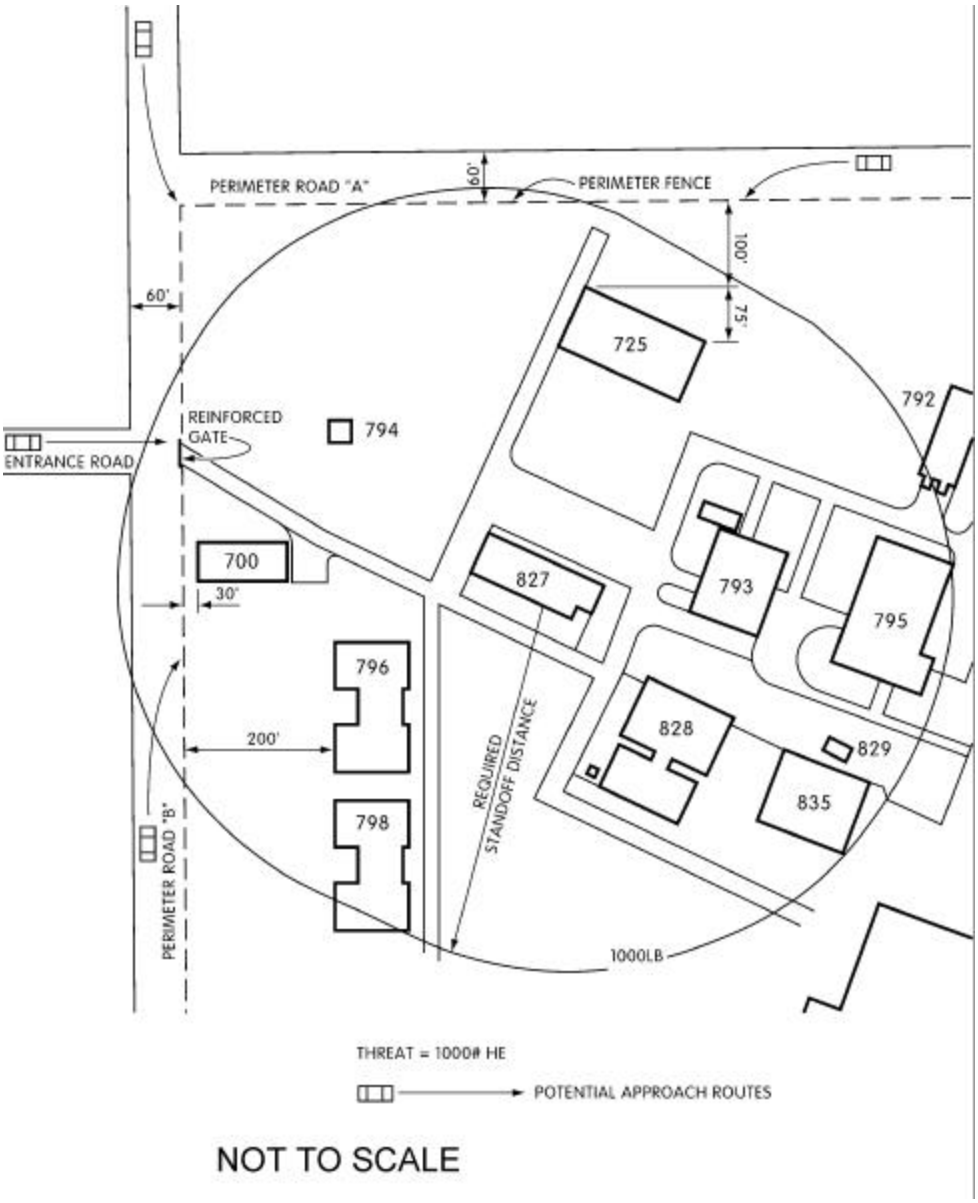


Scale: 1 foot = 0.3048 m
1 pound = 0.453 kg

**NORTH**

Figure 3
Example Site Layout

6.3 Integrated Physical Security System. An integrated physical security protection system can be developed from the deficiencies identified in the site survey. Current security requirements and threats identified for the specific facility should be considered. Physical barriers, such as perimeter fences and active and passive barriers, should be integrated with other security components and options to provide comprehensive protection. For example, vehicles attempting to penetrate the perimeter covertly can be detected, using perimeter sensors, lights, and closed circuit television (CCTV), and assessed. Sallyports can be used to detect bombs hidden in vehicles entering the facility. Bollards, ditches and planters can be strategically placed to improve performance and reduce the cost of the perimeter barrier. Clear zones can be used for early detection of a broad range of potential threats. Examples of some integrated physical security measures are shown in Figure 4.

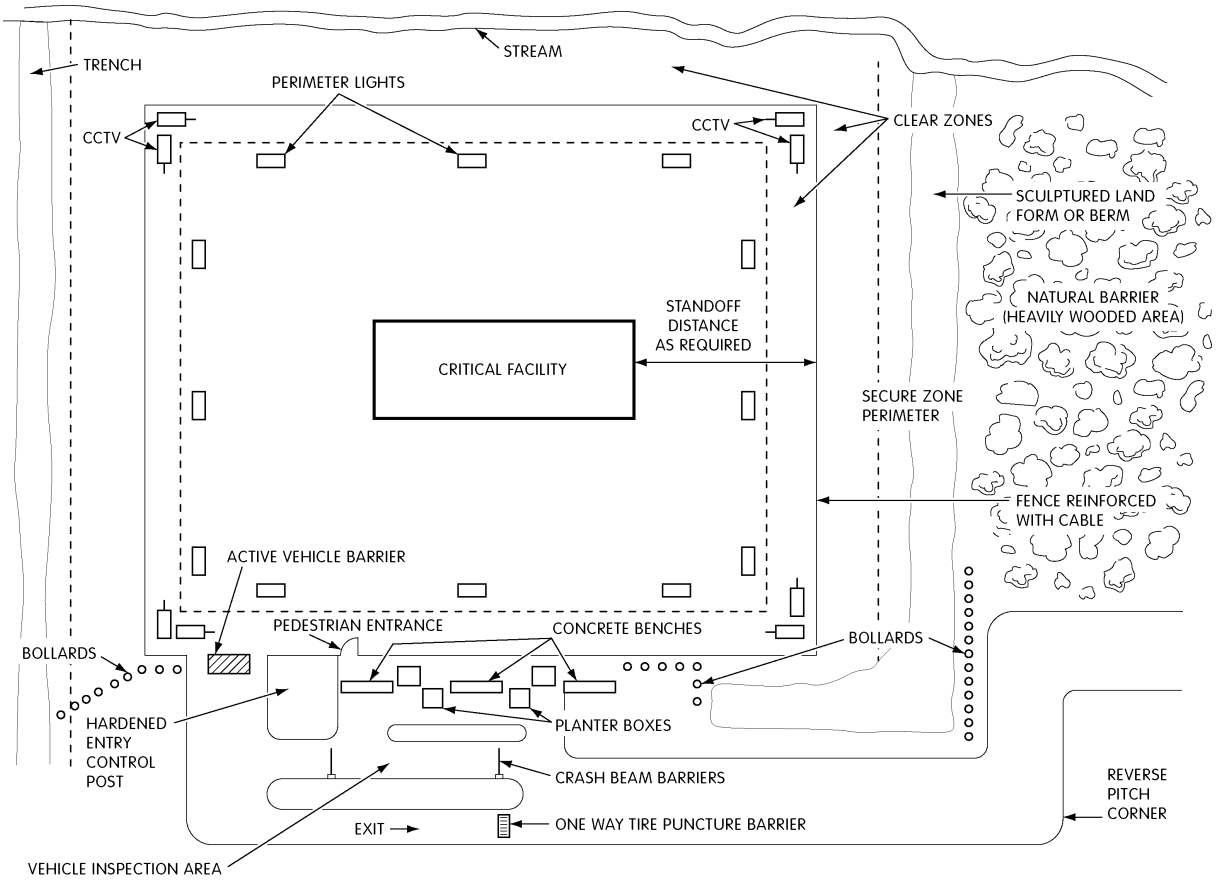


Figure 4
Integrated Physical Security System

6.4 Attainable Vehicle Speed. Vehicle speed at the point of impact is a major parameter in determining the required performance of a vehicle barrier. The impact is calculated from the initial speed, "**v**," the acceleration rate, "**a**," and the distance, "**s**," available for acceleration between the starting point and the point of impact. Surface condition of the path, the general terrain, whether the path is straight or curved, and if curved, whether or not it is banked, are additional factors that must be considered. Information presented in Figures 5 through 9 may be used to either calculate the maximum attainable vehicle speed, or to suggest strategies for modifying possible attacking paths for vehicle speed control.

Based on topographical descriptions, all possible driving paths should be identified on the map so the impact speed along the perimeter can be calculated. Using this data, the strategy for barrier design, selection, and installation can then be developed.

NOTE: The typical acceleration of conventional vehicles is usually known. For example, 11.3 feet per second squared (3.45 meters per second squared) is typical for high performance cars, and 5.8 feet per second squared (1.77 meters per second squared) is typical for 2-1/2-ton (2,273-kg) commercial trucks.

6.4.1 Attainable Vehicle Speed on a Straight Path. A long, straight path between the starting point and a vehicle barrier will result in the highest attainable vehicle speed.

a) On a Horizontal Surface. On a horizontal, straight path, the speed attainable by an accelerating vehicle depends primarily on its initial speed, "$\mathbf{v_0}$," the acceleration, "**a**," and the distance, "**s**," traveled during acceleration. The relationship among these parameters is given in Equation (1).

EQUATION: $$\mathbf{v}^2 = \mathbf{v}_0^2 + \mathbf{2as} \qquad (1)$$

where:

$\mathbf{v}$ = final vehicle speed
$\mathbf{v_0}$ = initial vehicle speed
$\mathbf{a}$ = acceleration
$\mathbf{s}$ = distance traveled

For convenience, Equation (1) is plotted as Figure 5, using a conversion factor for values in ft/sec$^2$ and mph.

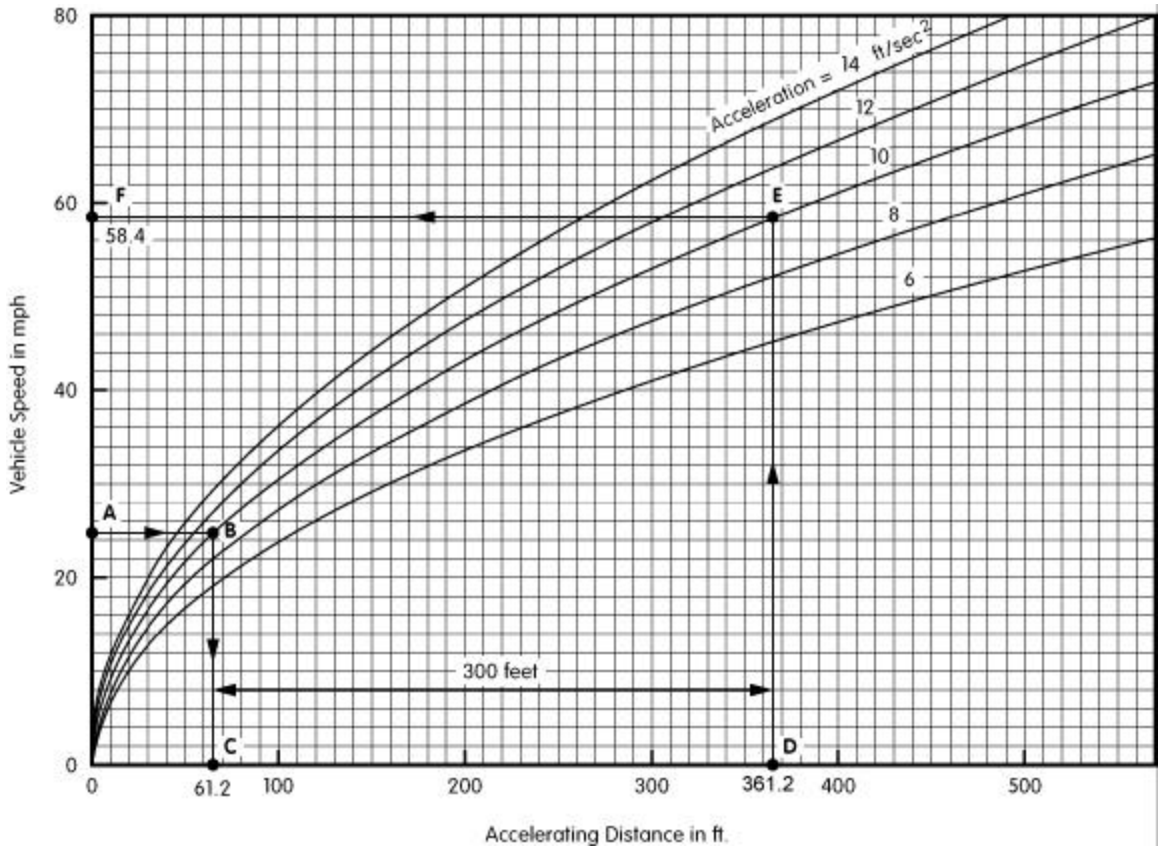


Scale: 1 foot per second squared = 0.3048 meter per second squared

Figure 5
Vehicle Speed vs. Acceleration Distance

To illustrate its use, consider the case of a vehicle accelerating on a 300-foot (91.5 m), straight, horizontal path with initial speed, $\mathbf{v_0}$ = 25 mph (15.53 kph), and acceleration, **a** = 10 feet per second squared (3.05 meters per second squared). The speed at the end of the path will be determined as follows:

1) Locate $\mathbf{v_0}$ = 25 mph (15.53 kph) on the vertical axis (point A).

2) Draw a horizontal line from point A until it intersects the curve (at point B) for **a** = 10 feet per second squared (3.05 meters per second squared).

3) Draw a vertical line down from point B until it intersects the horizontal axis (point C). This is the point from which velocity will be calculated.

4) Locate point D on the horizontal axis so that the distance between points C and D is the accelerating distance [300 feet (91.5 m) in this example].

5) Draw a vertical line up from point D until it intersects the curve (at point E) for **a** = 10 feet per second squared (3.05 meters per second squared).

6) Draw a horizontal line from point E until it intersects the vertical axis (point F).

7) The value of the speed, "**v**," at point F, 58.4 mph (36.29 kph), is the answer.

Note: If "$\mathbf{v_0}$" = 0, the graph can be used to determine velocity from a dead start.

b) On a Slope. Due to gravitational effect, to achieve the same final speed as that on a horizontal path, the required distance for acceleration on a slope will be shorter (longer) if the vehicle is traveling downhill (uphill). Let, "**s**," be the acceleration distance needed to also attain final speed, "**v**," on a horizontal path, and let, "**s'**," be the acceleration distance needed to attain, "**v**," on a sloped path. The following relationship shown in Equation (2) applies:

EQUATION: $$\mathbf{s'/s = 1/[1 + (g/a)\sin\theta]} \qquad (2)$$

where:

**s'** = acceleration distance needed to attain final speed on a sloped path
**s** = acceleration distance needed to attain final speed on a horizontal path
**g** = gravitational constant = 32.2 feet per second squared (9.82 meters per second squared)
**a** = acceleration of the vehicle, feet per second squared
$\theta$ = angle between the slope and the horizontal in degrees

This correction factor relationship is plotted as Figure 6.

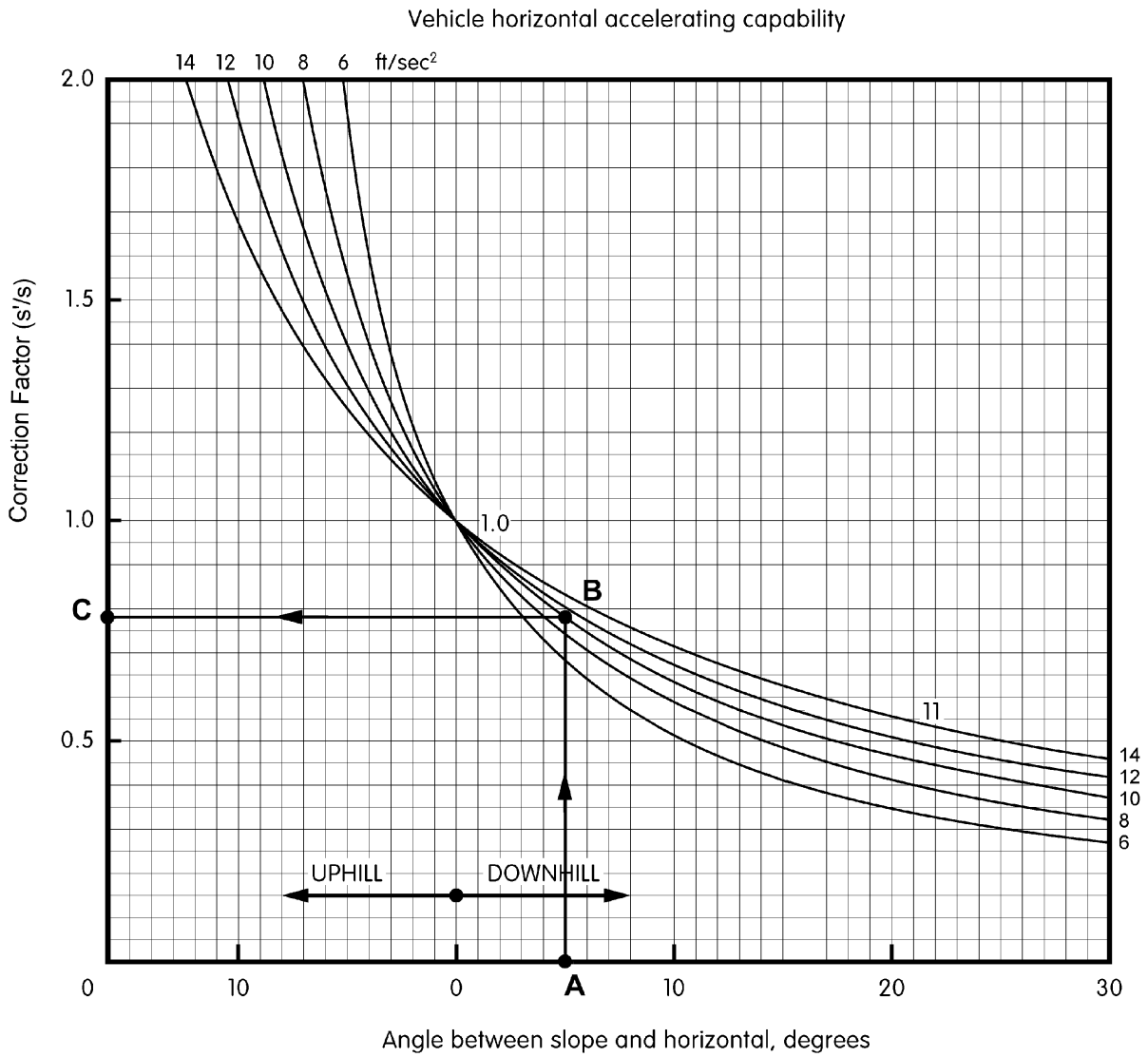


Scale: 1 foot per second squared = 0.3048 meter per second squared

Figure 6
Speed Correction Factor for Vehicles Driving on a Sloped Path

To illustrate the use of this figure, consider the example used in 6.4.1a, except the vehicle is traveling downhill on a 5-degree slope. The steps are:

1) Locate 5 degrees on the horizontal axis (point A).

2) Draw a vertical line up from point A until it intersects the curve (at point B) for **a** = 10 feet per second squared (3.05 meters per second squared).

3) Draw a horizontal line from point B toward the vertical axis and read off the "**s'/s**" value at the intersecting point C.

4) The value of **s'/s** is 0.78. Because **s' = s x (s'/s)** and **s** = 300 feet (91.5 m), therefore **s'** = 300 feet (91.5 m) x 0.78 = 234 feet (71.32 m).

This example shows that to accelerate the vehicle to the same 58.4 mph speed (36.29 kph), a 5-degree slope will help shorten the accelerating distance from 300 feet (91.5 m) to 234 feet (71.32 m). It clearly demonstrates the increased vulnerability caused by local terrain sloping down toward a protected area. Modifying the local terrain is an effective way to minimize vulnerability.

6.4.2 Attainable Vehicle Speed on a Curved Path. Centrifugal force makes it difficult to drive fast on a curve unless the road surface is properly banked. The centrifugal force, "**CF**," of a vehicle moving on a curved path depends on its weight, "**w**," the radius of the curvature, "**r**," and the speed, "**v**," and **g** = gravitational constant = 32.2 feet per second squared (9.82 meters per second squared), as shown in Equation (3).

EQUATION: $$\mathbf{CF = wv^2 /(gr)} \qquad (3)$$

where:

**CF** = centrifugal force
**W** = vehicle weight
**r** = radius of curvature
**v** = vehicle speed
**g** = gravitational constant

When the "**CF**" is large enough, it will overcome the road friction and a vehicle will skid. The vehicle could also topple if its center of gravity is too high. Because skidding usually occurs first, only this condition will be considered here. Road friction force, "**FF**," equals the product of the vehicle weight, "**w**," and the friction coefficient, "**f**," between the tires and the road surface, as shown in Equation (4).

EQUATION: $$\mathbf{FF = fw} \qquad (4)$$

where:

**FF** = road friction force
**f** = friction coefficient
**w** = vehicle weight

**NOTE: The value of friction coefficient, "f," is between 0 and 1 and is highly variable. It depends on the tire and its condition, the material and condition of the drive path, any oil or water on the drive surface, etc. On a roadway, under normal conditions, f = 0.6 is usually used. If unable to determine, use f = 1, which will provide a more conservative value.**

a) On a Horizontal Surface. The skidding speed (the speed at which skidding occurs), "$\mathbf{v_S}$," is obtained by equating the centrifugal force and the road friction force, as shown in Equations (5) and (6).

EQUATION: $$\mathbf{fw = wv_S^2 /(gr)} \qquad (5)$$

where:

**f** = friction coefficient
**w** = vehicle weight
$\mathbf{v_S}$ = skidding speed
**g** = gravitational constant
**r** = radius of curvature

From which,

EQUATION: $$\mathbf{v_S} = \sqrt{fgr} \qquad (6)$$

where:

$\mathbf{v_S}$ = skidding speed
**f** = friction coefficient
**g** = gravitational constant = 32.2 feet per second squared (9.82 meters per second squared)
**r** = radius of curvature

Because "**v**" must be made as small as possible for the most cost-effective protection, this relationship suggests that options for the physical security planner include making the drive path slippery, with a small radius of curvature, or both. The above relationship is plotted as Figure 7, using "**f** " as a parameter using a conversion factor for values in ft and mph.

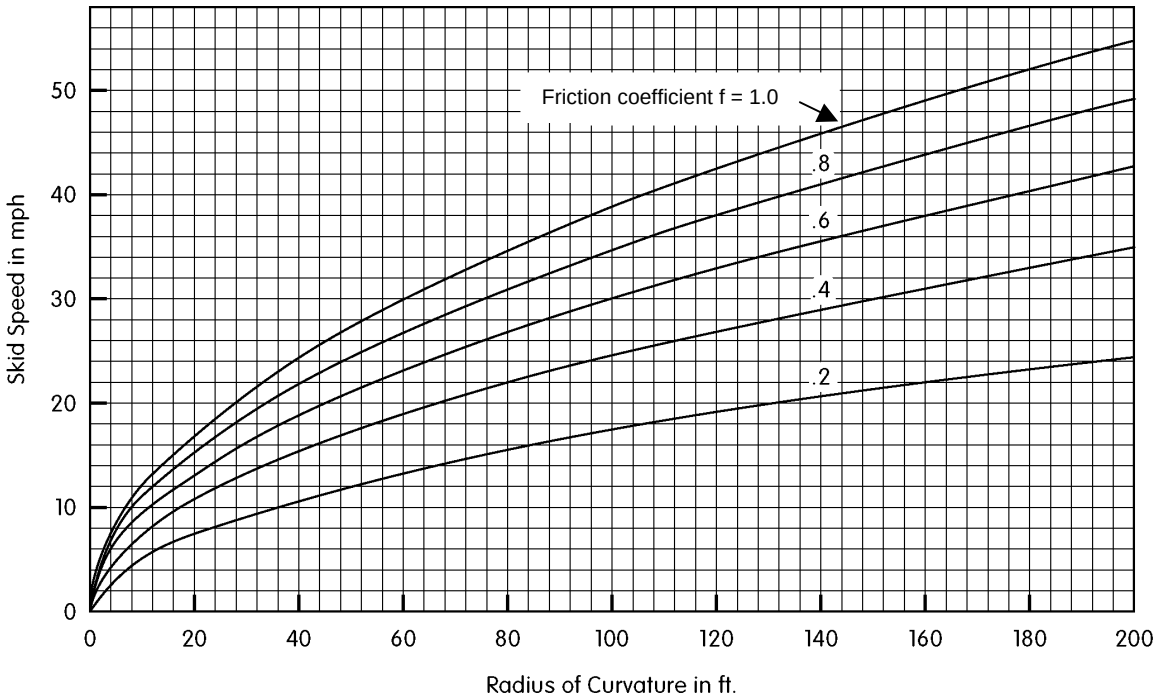


Scale: 1 foot = 0.3048 m
1 mph = 1.6093 kph

Figure 7
Skid Speed vs. Radius of Curvature

Using Figure 7, with a chosen value of "**f** " (see previous Note) and the tolerable vehicle impact speed of the barrier to be selected, a curved path can be designed to cause any vehicle driving above that velocity to skid.

b) On a Slope. Unlike a straight downhill path (see Paragraph 6.4.1b), a curved downhill path is actually effective in deterring vehicle attacks. This is because the extra velocity gained from travelling downhill can easily cause the vehicle to skid or topple. Therefore, if a protected area has downhill approach paths, the local terrain can be modified so that a straight driving path is impossible. Caution should be exercised when designing roads to decrease velocity. Posting speed restrictions along the path is strongly recommended to reduce the possibility of accidental skidding.

To determine the final velocity at the end of a curved path, use the length of the curved path as the length in Figures 5 and 6. Figure 7 can then be used to determine the velocity at which the vehicle will skid.

6.4.3 Attack Routes Parallel to the Barrier. Any path where a vehicle is forced to make an abrupt (short radius) turn before impacting the barrier will reduce the energy transferred to the barrier. Short radius turns can effectively reduce vehicle speed by forcing the vehicle to slow down to avoid skidding and will reduce load transfer, if the angle of impact is less than 90 degrees to the barrier. Therefore, the amount of energy that must be absorbed by a perimeter barrier depends on the angle of impact (see Figure 3, perimeter roads A and B for a graphical representation of this angle of impact) and the final speed of the vehicle at impact. The perpendicular component of the velocity determines the load transferred to the barrier. By using Figures 8 and 9, the impact angle directed toward the barrier, based on the offset distance (distance between restricting barriers, i.e., the distance between curbs or barriers that will limit the available turning radius), can be determined. These figures are based on the formulas provided in Paragraph 6.4.2a. Figures 8 and 9 show the impact angle versus speed for a given offset distance for friction factors **f** = 0.5 and **f** = 0.9. The curves can be used to determine the angle of impact, "**θ**," knowing the values of the friction coefficient, "**f**," speed at the start of the turn, "**v**," and the offset distance available.

Once the angle of impact is determined from Figures 8 and 9, the speed component perpendicular to the barrier, "**Vp**," can be calculated using Equation (7).

EQUATION: $$\mathbf{Vp = v \sin\theta} \qquad (7)$$

where:

**Vp** = speed component perpendicular to barrier
**v** = speed at start of turn
θ = angle of impact

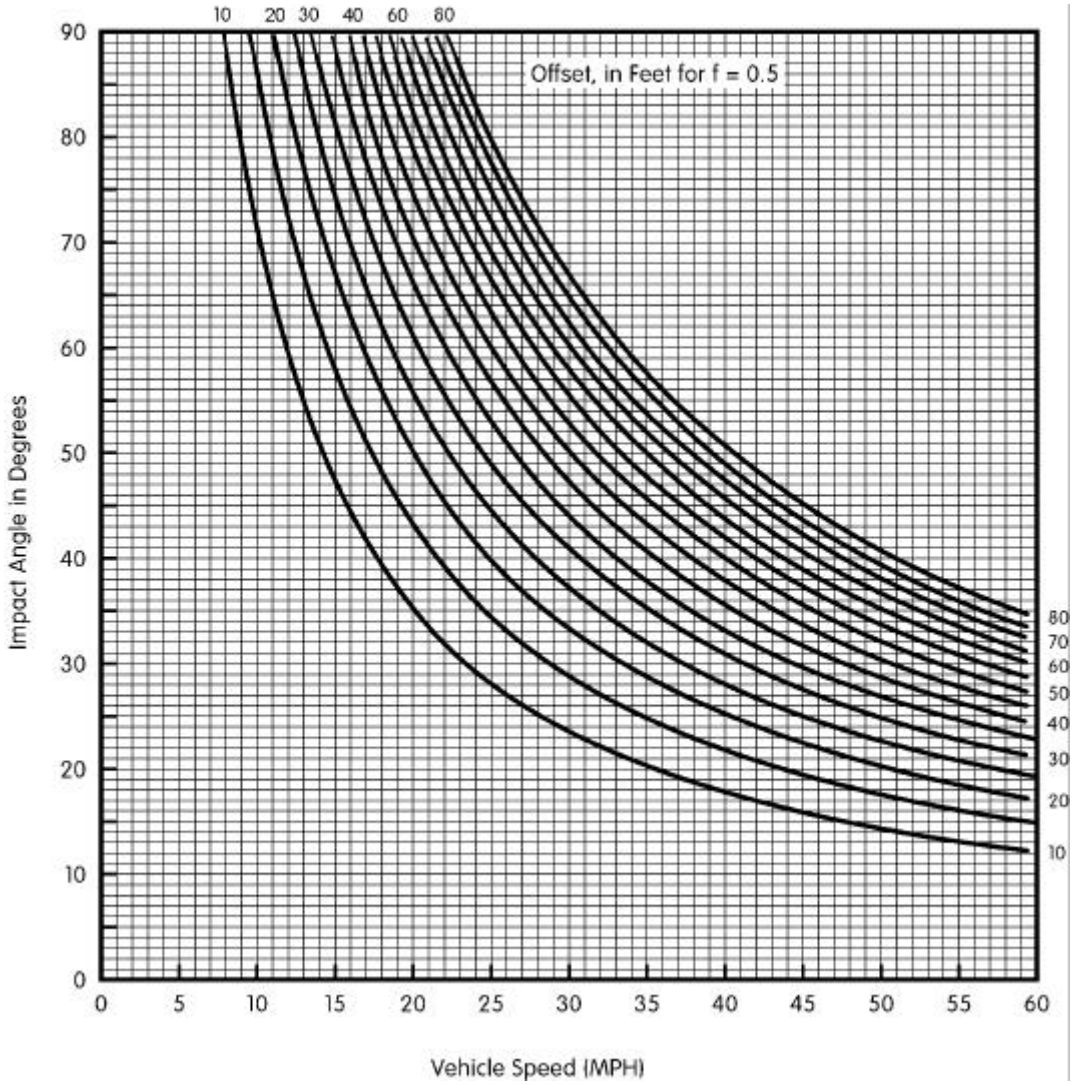


Scale: 1 ft = 0.3048 m
1 mph = 1.6093 kph

Figure 8
Correction Factor for Vehicle Traveling Parallel to Barrier
(Based on Coefficient of Friction, f = 0.5)

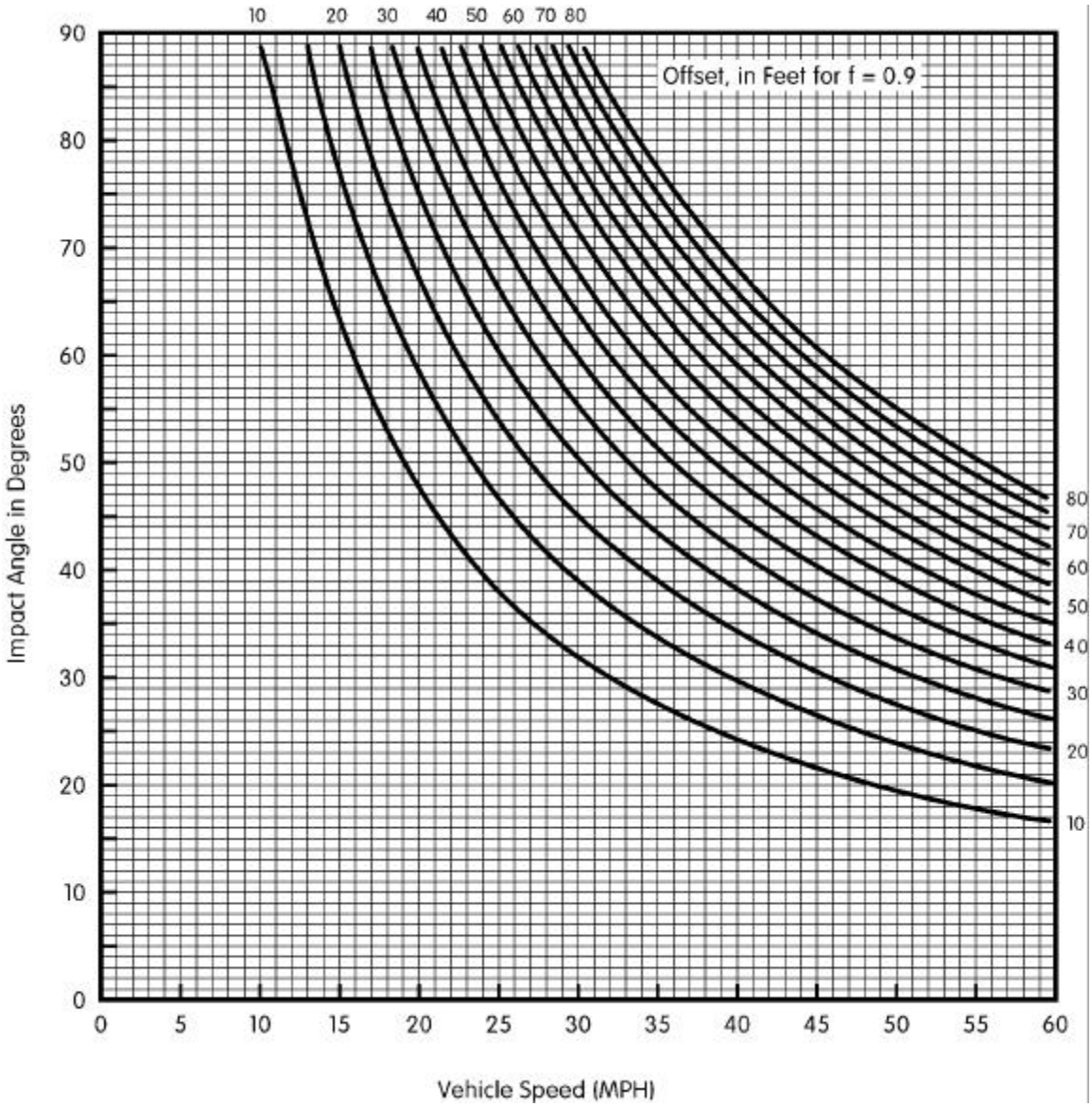


Scale: 1 ft = 0.3048 m
1 mph = 1.6093 kph

Figure 9
Correction Factor for Vehicle Traveling Parallel to Barrier
(Based on Coefficient of Friction, f = 0.9)

For convenience, Table 1 provides a correction factor for, "**Vp**," based on the speed of the vehicle at the beginning of the turn, the offset distance available for negotiating the turn, and a friction coefficient **f** = 1.0 (the most conservative value).

Table 1
Speed Correction Factor for a Vehicle Traveling Parallel to Barrier
(Based on Friction Coefficient = 1.0)

| Speed of Vehicle in mph (kph)→ | 20 (32) | 30 (48) | 40 (64) | 50 (80) | 60 (97) | 70 (113) | 80 (129) |
|---|---|---|---|---|---|---|---|
| Max. Radius of Curve @ f=1.0 ft (m)→ | 27 (8) | 60 (18) | 107 (33) | 167 (51) | 240 (73) | 327 (100) | 427 (56) |
| Offset Distance in ft (m) ↓ | | | | | | | |
| 10 (3.1) | 0.616 | 0.559 | 0.438 | 0.342 | 0.292 | 0.242 | 0.208 |
| 20 (6.2) | 0.966 | 0.743 | 0.588 | 0.470 | 0.407 | 0.342 | 0.309 |
| 30 (9.3) | 1.0 | 0.866 | 0.707 | 0.547 | 0.485 | 0.423 | 0.375 |
| 40 (12.4) | 1.0 | 0.946 | 0.788 | 0.656 | 0.559 | 0.470 | 0.423 |
| 50 (15.3) | 1.0 | 0.988 | 0.848 | 0.707 | 0.616 | 0.545 | 0.470 |
| 60 (18.3) | 1.0 | 1.0 | 0.899 | 0.766 | 0.656 | 0.588 | 0.515 |
| 70 (21.4) | 1.0 | 1.0 | 0.940 | 0.809 | 0.707 | 0.629 | 0.545 |
| 80 (24.4) | 1.0 | 1.0 | 0.966 | 0.867 | 0.743 | 0.656 | 0.574 |

6.5 Vehicle Kinetic Energy. The kinetic energy of a moving vehicle is measured by its weight and speed, and may be calculated, as shown in Equation (8).

EQUATION:

$$\mathbf{KE\ (ft\text{-}lbf) = 0.0334\ wv^2} \qquad (8)$$

$$\mathbf{KE\ (kgf\text{-}m) = 0.0039\ wv^2}$$

where:

**KE** = kinetic energy in foot-pounds force (kgf-m)
**W** = vehicle total weight in pounds (kg)
**v** = vehicle speed in miles per hour (kph)

To inflict damage on any protected property, the vehicle must first penetrate the perimeter security barriers. To achieve this, the vehicle must have a certain level of kinetic energy. The kinetic energy of a moving vehicle is a function of its weight and speed. A heavy vehicle moving at a low rate of speed, or a lighter vehicle at a high rate of speed could have the same kinetic energy.

Kinetic energy for 4,000-pound and 15,000-pound vehicles, traveling at various speeds, is shown in Table 2. Once the kinetic energy of the vehicle has been determined, active and passive barriers, capable of stopping the vehicle, can be selected from the information contained in Section 8.

Table 2
Kinetic Energy Developed by Vehicle, ft-lbf (kgf-m) x 1,000

| | Speed of Vehicle in mph (kph) | | | | | | |
|---|---|---|---|---|---|---|---|
| Vehicle Weight in pounds (kg) ↓ | 10 (16) | 20 (32) | 30 (48) | 40 (64) | 50 (80) | 60 (97) | 70 (113) |
| 4,000-lb (1,818 kg) Vehicle | 13 (2) | 53 (7) | 120 (17) | 214 (29) | 334 (46) | 481 (66) | 655 (90) |
| 15,000-lb (6,818 kg) Vehicle | 50 (7) | 200 (28) | 451 (62) | 802 (111) | 1,253 (173) | 1,804 (249) | 2,455 (339) |

## Section 7: VEHICLE BARRIER DESIGN AND INSTALLATION

7.1 Vehicle Barrier Types. Vehicle barriers are categorized as either active or passive. Active and passive barriers can be fixed or movable, depending on how they are made, operated, or used. Some commercial barriers are dual classified, when they meet the requirements for both categories (e.g., fixed-active, portable-passive, etc.) There is no industry-wide standard terminology for vehicle barriers. For this handbook, the following definitions will be used.

7.1.1 Active Barrier Systems. An active barrier requires some action, either by personnel, equipment, or both, to permit entry of a vehicle. Active barrier systems include barricades, bollards, beams, gates, and active tire shredders.

7.1.2 Passive Barrier Systems. A passive barrier has no moving parts. Passive barrier effectiveness relies on its ability to absorb energy and transmit the energy to its foundation. Highway medians (Jersey bounce), bollards or posts, tires, guardrails, ditches, and reinforced fences are examples of passive barriers.

7.1.3 Fixed Barrier Systems. A fixed barrier is permanently installed or requires heavy equipment to move or dismantle. Examples include hydraulically operated rotation or retracting systems, pits, and concrete or steel barriers. Fixed barrier systems can be either active or passive.

7.1.4 Portable/Movable Barrier Systems. A portable/movable barrier system can be relocated from place to place. It may require heavy equipment to assist in the transfer. Hydraulically operated, sled-type, barricade systems, highway medians, or filled 55-gallon drums that are not set in foundations are typical examples. Portable/movable barrier systems can be either active or passive.

7.2 Design Considerations. In addition to calculating the kinetic energy of a threat vehicle (Section 6), there are other issues that must be considered before selecting an appropriate barrier system. These issues are discussed below.

7.2.1 Fencing. Fences should not be considered as protection against a moving vehicle attack. Most fences can be easily penetrated by a moving vehicle and will resist impact only if reinforcement is added. Fences are primarily used to:

a) Provide a legal boundary by defining the outermost limit of a facility;

b) Assist in controlling and screening authorized vehicle entries into a secured area by deterring overt entry elsewhere along the boundary;

c) Support detection, assessment, and other security functions by providing a "clear zone" for installing lighting, intrusion detection equipment and CCTV;

d) Deter "casual" intruders from penetrating into a secured area by presenting a barrier that requires an overt action to penetrate;

e) Cause an intruder to make an overt action that will demonstrate intent;

f) Briefly delay penetration into a secured area or facility, thereby increasing the possibility of detection.

In the field of security, perimeter barriers provide the first line of defense for a facility. The true value of a perimeter security fence comes in its association with other components of a security system. When perimeter security is required, the security fence forms the basic building block for the rest of the system.

7.2.2 Location. Active vehicle barriers can be located at facility entrances, enclave entry points (gates), or selected interior locations (e.g., entrances to restricted areas). Exact locations may vary among installations; however, in each case, the barrier should be located as far from the critical structure as practical to minimize damage due to possible explosion. Also, locate support equipment (e.g., hydraulic power, generator, batteries, etc.) on the secure side and away from guard posts to lower the threat of sabotage and injury to security personnel. Passive barriers can be used at entry points, if traffic flow is restricted or sporadic (i.e., gates that are rarely used). Passive barriers are normally used for perimeter protection.

7.2.3 Aesthetics. The overall appearance of a vehicle barrier plays an important role in its selection and acceptance. Many barriers are now made with aesthetics in mind that will blend in with the environment.

7.2.4 Safety. An active vehicle barrier system is capable of inflicting serious injury. Even when used for its intended purpose, it can kill or seriously injure individuals when activated inadvertently, either by operator error or equipment malfunction. Warning signs, lights, bells, and bright colors should be used to mark the presence of a barrier and make it visible to oncoming traffic. These safety features must always be provided to ensure personnel safety. The following issues should be addressed to manufacturers and users to identify potential safety issues affecting the selection of an active barrier system:

a) Backup power;

b) Emergency cutoff switch;

c) Adequate lighting;

d) Installation of safety options, such as alarms, strobes (or rotating beacons), and safety interlock detectors to prevent the barrier from being accidentally raised in front of or under an authorized vehicle.

Once installed, vehicle barriers should be well marked and pedestrian traffic channeled away from the barrier system. For high-flow conditions, vehicle barriers are normally open (allowing vehicles to pass) and used only when a threat has been detected. In this case, the barrier must be located far enough from the guard post to allow time to activate and close the barrier before the threat vehicle can reach it. For low-flow conditions, or where threat conditions are high, barriers are normally closed (stopping vehicle flow) and lowered only after authorization has been approved.

7.2.5 Security. Vehicle barriers must be ready to function when needed. A potential for sabotage exists when barriers are left unattended or are located in remote or unsecured areas. For these installation conditions, tamper switches should be installed on all vehicle barrier access doors to controllers or hydraulic systems. Tamper switches should be connected directly to a central alarm station, so that security of the barrier system can be monitored on a continuous basis.

7.2.6 Reliability. Many barrier systems have been in production long enough to develop an operations history under a variety of installation conditions. Reliability data from manufacturers show less than a three-percent failure rate when these barriers are properly maintained. Some systems have been placed in environments not known to the manufacturer, while others have developed problems not anticipated by either the manufacturer or user. Most manufacturers will help resolve problems that arise in their systems. Backup generators or manual override provisions are needed to ensure continued operation of active vehicle barriers during power failure or equipment malfunction. Spare parts and supplies should also be on hand to ensure that barriers are quickly returned to full operation. If a high cycle rate is anticipated, or the environmental impact from hydraulic fluid contamination is a concern, the selection of a pneumatic operating system, instead of hydraulic, is recommended.

7.2.7 Maintainability. Many manufacturers provide wiring and hydraulic diagrams, maintenance schedules, and procedures for their systems. They should also have spare parts available to keep barriers in continuous operation. The manufacturer should provide barrier maintenance support in the form of training and operation and maintenance manuals. Maintenance contracts are available from most manufacturers and are recommended to ensure proper maintenance of the barrier and assurance that the barrier will function as intended. Reliability and maintainability data are available from most manufacturers. Yearly maintenance contracts are usually available from the manufacturer at about $300 to $500 per month. Maintenance contracts should include inspection, adjustment, cleaning, pressure checks on hydraulic systems, and replacement of worn parts.

7.2.8 Cost. Traffic in restricted or sensitive areas should be minimized and the number of access control points limited. Reducing traffic flow and the number of control points will increase security and lower the overall cost of the system. Installation and operational costs are a significant part of the overall cost of a barrier system and must be addressed during the barrier selection process. Complexity and lack of standardized components can result in high costs for maintenance and create long, costly downtime periods. Reliability, availability, and maintainability (RAM) requirements on the system also affect costs.

7.2.9 Barrier Operations. A barrier must be capable of operating continuously and with minimal maintenance and downtime to properly satisfy security requirements. System failure modes must be evaluated to ensure that the barrier will fail in the predetermined position (open or closed), based on security and operational considerations. Selecting a normally open (allowing access) or closed (preventing access) option should be evaluated based on traffic flow conditions at the site (either existing or expected) and the overall site security plan. Emergency operation systems (backup generators or manual override systems) should be in place to operate the barrier in case of breakdowns or power failure. Contract guards, unions, and security officers should be in the decision to deploy and use a vehicle barrier system. If a normally open (allows traffic through) operation is selected, there must be sufficient distance between the guard and the vehicle barrier to allow activation and closing of the barrier.

7.2.10 Clear Zones. Barriers installed in clear zones must be designed so they will not provide a protective shield or hiding place. Tall, continuous barriers, such as planters, Jersey Barriers, guardrails, and other similar passive vehicle barriers, can be a violation of mandated requirements, if installed in a designated clear zone.

7.2.11 Environment. The environment must be considered during the selection process. Hinges, hydraulics, or surfaces with critical tolerances may require heaters to resist freezing temperatures and ice buildup. They may also require protection from excessive heat, dirt, humidity, salt water, sand, high water table, and debris. If options for protection against environmental conditions are not available, the system may be unsuitable for a specific location. Maintenance should be increased and/or compensating options (i.e., sump pumps, heaters, hydraulic fluid coolers, etc.) selected for vehicle barriers subject to severe environmental conditions to ensure acceptable operation.

7.2.12 Installation Requirements. The vehicle barrier selected must be compatible with the available power source and with other security equipment installed at the selected site, such as perimeter intrusion detection and CCTVs designed to detect and assess covert penetration of the perimeter. Power requirements can vary depending upon the manufacturer and location of the installation.

7.2.13 Operator Training. Most manufacturers recommend operator training for active barrier systems. Operator training prevents serious injury and legal liability, as well as equipment damage caused by improper operations. If a manufacturer does not provide a thorough program for operator training, the user should develop a checklist for normal and emergency operating procedures.

7.2.14 Options. Manufacturers offer a number of optional features that can be added to the baseline systems. Some options enhance system performance, while others improve maintainability or safety. Options increase system cost and may also increase maintenance requirements. Selection of options depends on operational, safety, security, site, and environmental conditions. Options available from manufacturers for active vehicle barrier systems certified by the Department of State

(DOS) (listed in Table C-1 in Appendix C) are provided in Table 3. Manufacturers can provide guidance on available options and will make recommendations that will enhance barrier operations.

7.2.15 Operational Cycle. The frequency of operation must be considered in the selection process. Where traffic flow is light, a manually operated or removable passive system may work well at considerable savings. However, for high-traffic flow conditions (especially during peak hours), an automatically controlled system designed for repeated and fast open and close operation (pneumatic or hydraulic) would be more desirable. The use of one or more barriers at an entry point can also improve throughput.

7.2.16 Methods of Access Control. When selecting an active barrier, consider how vehicles will be allowed access. If a vehicle must be searched for explosives, a sally port design should be used, which will trap the vehicle between two active barriers while it is being searched. This will prevent the vehicle from proceeding into the secured area before it has been searched and prevent escape (see Figure 4). Access control can be accomplished with a staffed guard station or, remotely, using card or biometric access control devices that automatically activate the barrier (subject to random searches). The barrier can also be operated from a protected location other than the entry control point, using CCTV and remote controls. Access control systems are available as options from vehicle barrier manufacturers (see Table 3). Vehicle-sensing loops on the secure side of the vehicle barrier should always be included to prevent activation of the barrier until the vehicle has completely cleared the system. If card access control systems are used, procedures must be included to prevent tailgating (authorized vehicle must wait until the barrier has closed completely before proceeding).

7.2.17 Cost Effectiveness. Tradeoffs on protective measures may include:

a) Locating the vehicle barrier to provide optimum separation distance;

b) Slowing down vehicles approaching the barrier, using obstructions or redesign of the access route;

c) Barrier open to permit access vs. closed to prevent access;

d) Active vs. passive barriers;

e) System-activating options: manual vs. automatic, local vs. remote, electrical vs. hydraulic;

f) Safety, RAM characteristics.

Table 3
Options Available for Certified Active Barriers

| **Barrier System*** | 1 | 2 | 3 | 4 | 5 | 6 | 7 | 8 | 9 | 10 | 11 | 12 | 13 | 14 |
|---|---|---|---|---|---|---|---|---|---|---|---|---|---|---|
| **Options** | | | | | | | | | | | | | | |
| Access Control System | x | x | x | x | x | x | x | x | x | x | x | x | x | x |
| Adjustable Cycle | x | x | x | x | x | x | x | x | x | x | x | x | x | x |
| Automatic Operation | x | x | x | x | x | x | x | x | x | x | x | x | x | x |
| Auto-Read Laser ID System | x | x | x | x | x | x | x | x | x | x | x | x | x | x |
| Battery-Powered Backup (Secondary System Only) | x | x | x | x | x | x | | | | x | x | x | x | x |
| Card Access Control | x | x | x | x | x | x | x | x | x | x | x | x | x | x |
| Directional Indicating System | x | x | x | x | x | x | x | x | x | x | x | x | x | x |
| Export Packaging | x | x | x | x | x | x | x | | | x | x | x | x | x |
| Heated Sump and Pump | x | x | x | x | x | x | | | | x | x | x | x | x |
| High-Speed Monitor Alarm System | x | x | x | x | x | x | x | x | x | x | x | x | x | x |
| Hydraulic Capability | x | x | x | x | x | x | x | x | x | x | x | x | x | x |
| Hydraulic Oil Cooler | x | x | x | x | x | x | x | x | x | x | x | x | x | x |
| Hydraulic Oil Heater | x | x | x | x | x | x | | | | x | x | x | x | x |
| Integral/Remote Hydraulics | x | x | x | x | x | x | | | | | | | | |
| Lift Gate | x | x | x | x | x | x | x | x | x | | | | | |
| Low-Temperature Protection | x | x | x | x | x | x | x | x | x | x | x | x | x | x |
| Manual Hydraulic Pump | x | x | x | x | x | x | | | | x | x | x | x | x |
| Master Station w/ Override | x | x | x | x | x | x | x | x | x | x | x | x | x | x |
| Multiple Station Controls | x | x | x | x | x | x | x | x | x | x | x | x | x | x |
| Open Barrier Warning | x | x | x | x | x | x | x | x | x | x | x | x | x | x |
| Pneumatic Capability | | | x | x | x | x | | | | | | | | |
| Portability Package | | | | | | | x | x | x | | | x | | |
| Programmable Controller | x | x | x | x | x | x | x | x | x | | | | | |
| Radio-Controlled Operation | x | x | x | x | x | x | x | x | x | x | x | x | x | x |
| Red/Green Traffic Lights | x | x | x | x | x | x | x | x | x | x | x | x | x | x |
| Remote-Controlled Operation | x | x | x | x | x | x | x | x | x | x | x | x | x | x |
| Repetitive Cycle | x | x | x | x | x | x | x | | | x | x | x | x | x |
| Self-Priming Sump Pump | x | x | x | x | x | x | | | x | x | x | x | x | x |
| Strip Heater w/ Thermostat | x | x | x | x | x | x | x | x | x | x | x | x | x | x |
| Tamperproof Package | x | x | x | x | x | x | x | x | x | x | x | x | x | x |
| Timer/Safety Detector | x | x | x | x | x | x | x | x | x | x | x | x | x | x |
| Uninterruptible Power Source | x | x | x | x | x | x | | | | x | x | x | x | x |
| Warning Lights | x | x | x | x | x | x | x | x | x | x | x | x | x | x |
| Water Level Indicator | x | x | x | x | x | x | x | x | x | x | x | x | x | x |
| Wireless Activation | x | x | x | x | x | x | x | x | x | x | x | x | x | x |
| 50-Hz Motors and Controls | x | x | x | x | X | x | x | x | x | x | x | x | x | x |
| 60-Hz Motors and Controls | x | x | x | x | X | x | x | x | x | x | x | x | x | x |

* See Table C-1 in Appendix C for Barrier System Identification

7.2.18 Liabilities. Possible legal issues resulting from accidents (i.e., deaths, injuries) and legal jurisdiction (i.e., state, local, foreign country) should be considered when deciding to install an active vehicle barrier system.

7.3 Actions to Avoid

a) Do not install barriers that must be installed below ground level in locations where there is a high water table. Unless the excavation can be drained, water collection will cause corrosion, and freezing weather may incapacitate the system.

b) Do not install barriers at entrance and exit gates without also installing passive barrier systems along the remaining accessible perimeter of the protected area.

c) Avoid extensive protection of a large facility perimeter. Protection of individual buildings or zones within the perimeter is generally more cost-effective.

d) Avoid installing barriers where they are not under continuous observation. Most types of barriers can be easily sabotaged.

e) Avoid locating barriers immediately adjacent to guard posts to minimize possibility of injury.

f) Do not neglect to install barriers on the exit side, as well as the entrance.

g) Avoid long, straight paths to a crash-resistant barrier. Where this cannot be avoided, provide a passive-type barrier maze to slow the vehicle.

7.4 Barrier Capability. In general, vehicle-crash-resistant barriers should be used at vehicle access points to sensitive areas and enclaves. Active and passive barriers should be tested against specific threats (vehicle weight and speed) or analyzed using finite element analysis or computer programs, specifically developed to analyze performance of vehicle barriers (see applicable document PDC TR90-2). Supplemental gate and fencing reinforcements may also be needed to provide consistent security.

The acceptable penetration distance will vary among installations, depending upon the locations of the barriers relative to the resources to be protected. The appropriate penetration distance for a given facility should be determined by the results of a threat and risk assessment and a physical security survey. To illustrate, refer to Example 1, Appendix B.

The Delta TT207 vehicle barrier selected as a candidate barrier must be capable of stopping the vehicle and allowing little or no penetration. In the example, sufficient standoff distance is not available to protect Building 827 from the expected explosive-loading conditions. Possible options would include moving the barriers further away from the target, closing the

perimeter roads to traffic, hardening building 827 against increased blast-loading conditions or accepting additional risk to the structure.

For static perimeter barriers, it is important to note that weight alone will not prevent penetration. As described in 8.2.2.2, concrete barriers used to protect against vehicle impact should be anchored to a concrete foundation, if the impact angle is expected to exceed 30 degrees.

7.5 Vehicle Barrier Selection Checklist. The following checklist incorporates the selection process and the vehicle barrier design and installation requirements. Answers to the checklist questions should be used during the selection process for both active and passive barriers.

Design factors:

1. What is the explosive threat?
2. What is the weight of the threat vehicle?
3. Is there sufficient standoff distance between the planned barrier and the protected structure?
4. What is the expected speed of the vehicle?
5. Can the speed of the vehicle be reduced?
6. What is the calculated kinetic energy developed by the moving vehicle?
7. Have all impact points along the perimeter been identified?
8. Have the number of access points requiring vehicle barrier installation been minimized?
9. What is the most cost-effective active barrier available that will absorb the kinetic energy developed by the threat vehicle?
10. How many barriers are required at each entry point to meet throughput requirements?
11. What is the most cost-effective passive barrier that will absorb the kinetic energy developed by the threat vehicle?
12. Will the use of esthetic barriers at some locations be necessary?
13. Is penetration into the site a factor?
14. If penetration into the site is a factor, is the standoff distance adequate after impact?
15. Will traffic flow be affected by the barrier's normal cycle rate?
16. Will the active barrier need to be activated at a rate higher than the normal rate?
17. Will the barrier be required to be normally open (allow traffic to pass) or normally closed (stop traffic flow?
18. If normally open (allowing traffic flow), is adequate distance available between the guard post and the barrier to allow activation and operation of the barrier?
19. Will the barrier be subject to severe environmental conditions?
20. Do passive barriers installed along the perimeter provide equivalent protection to the active barriers?
21. Do passive barriers interfere with established clear zone requirements?
22. In case of power failure, will the barrier fail open or closed?
23. Is this a temporary or permanent installation?

Selection factors:

24. Will the selected barrier need to be aesthetically pleasing?
25. Are appropriate safety features being considered?
26. Will there be sufficient lighting at the active barrier location?
27. Will electronic access control (card reader) be included?
28. If so, are procedures in place to prevent tailgating?
29. Will the active barrier require backup power?
30. What is the available power source?
31. Is training available from the manufacturer?
32. Does the manufacturer have optional features available to meet operational, safety, security, and RAM requirements?
33. Has the selected barrier been crash-tested or are calculations/computer analysis using BIRM (PDC TR90-2) available that will demonstrate performance capability?
34. Will the active barrier be electrically or hydraulically powered?
35. How will the barrier be controlled?
36. Is the selected barrier designed to resist corrosion or other environmental effects?
37. Will the active barrier function adequately within the temperature extremes present at the selected site?
38. Are optional heaters and coolers available to compensate for temperature extremes?
39. Is the active barrier capable of manual operation in case of power failure?
40. Is the active or passive barrier the most cost-effective option available?

Installation factors:

41. Is there a high water table?
42. If so, can the excavation be adequately drained?
43. Will active barriers be installed in areas that are under constant surveillance?
44. Are barriers installed on both the entrance and exit sides of the access point?
45. Are spare parts available for the active barrier?
46. Will regularly scheduled maintenance be performed in-house or by contract?

# Section 8: ACTIVE AND PASSIVE VEHICLE BARRIERS

8.1 Active Barrier Systems. Commercially available active vehicle barrier systems are presented in this section. This listing is only a compilation of reference material and does not imply endorsement by the government, nor is it a complete listing of vehicle barriers that are commercially available. Selection of a specific barrier should be based on site conditions and results of the design, selection, and installation checklist provided in Section 7.5. Results of this checklist can be used to establish cost, operational, performance and environmental requirements and select the optimum active and passive barriers from those presented in this section. Users are advised to consult with manufacturers on current and more detailed information regarding products and options available. See Appendix A for a list of manufacturers.

**NOTE: Information provided below is current as of August 1998, unless otherwise stated. Cost for selected barriers (those certified by DOS) is provided in Appendix C. A consolidated list of active barriers, kinetic energy, and penetration data is provided in Appendix E.**

8.1.1 Crisp and Associates Vehicle Surface Barrier.

8.1.1.1 Description. The vehicle surface barrier (VSB) shown in Figure 10 is a movable, self-contained, portable (Model VSB 80187-P10) or fixed (Model VSB 80187-F10) roadway barrier. It can be controlled as a manned checkpoint. Standard equipment is a 50-foot (15.2-meter) cord attached to a control box. For unmanned control, options include either an electric card reader or keypad. The self-contained hydraulic system is located in the curb panels and sealed to prevent fluid leaks. The unit can be placed on any roadway or other flat surface (with passive barriers installed to prevent bypass). Once the electricity is connected, the system is operational. This barrier is best used for temporary installations, where high water table is a concern, or where portability is a requirement. Contact the manufacturer for current cost information. The DOS has certified this barrier. Performance and cost data are shown in Table 4.

8.1.1.2 Testing. The VSB was tested by the Naval Facilities Engineering Service Center (NFESC) at a vehicle barrier test bed in China Lake, California. Upon impact, the cab of a 15,200-pound (6,909-kg) truck, moving at 50.5 mph (81 kph), was crushed by the impact. The VSB, with the truck on top, slid 9.2 feet (2.8 m).

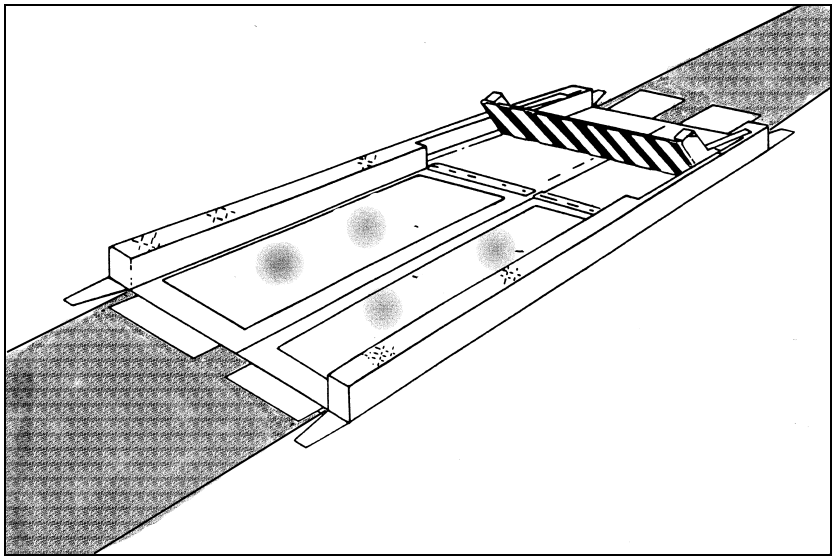

Figure 10
Vehicle Surface Barrier

Table 4
Vehicle Barriers Available From Crisp and Associates

| **Model** | **VSB-P10*** | **VSB-F10*** |
|---|---|---|
| Height, inches (cm) | 30 (76) | 30 (76) |
| Width, inches (cm) | 96 (244) | 96 (244) |
| Normal operating cycle (seconds) | 3 | 3 |
| Emergency operating cycle (seconds) | 1 | 1 |
| Kinetic energy absorbed in impact testing, ft-lbf (kgf-m) x one million | 1.2 (0.16) | 1.2 (0.16) |
| Kinetic energy rating by engineering analysis, ft-lbf (kgf-m) x one million (destruction of vehicle with some damage to barrier) | NA | NA |
| Barrier cost, $ x one thousand for a single system. Optional items are extra. | NA | NA |
| Installation cost as a percentage of equipment cost | NA | NA |

*DOS certified
P = Portable; F = Fixed; NA = Not Available

8.1.2 Delta Scientific Vehicle Barricade System

8.1.2.1 Description. The Delta Model TT205 and TT207 security barricade systems, shown in Figures 11 and 12, are self-contained, hydraulically or pneumatically operated units that, depending on the model, rise to various heights. These barriers are intended for high impact conditions. The TT207FM is intended for site conditions where below-ground installations are not practical. Performance and cost data for four models are shown in Table 5.

8.1.2.2 Testing. Model TT205 has not been formally crash-tested. Model TT207 was tested by Sandia National Laboratories with a 6,000-pound (2,727-kg) vehicle, traveling at 50 mph (80 kph), that penetrated the barrier 27 feet (8.2 m) and an 18,000-pound (8,182-kg) vehicle, traveling at 30 mph (48 kph), that penetrated 29 feet (8.8 m). Model TT207S was tested by Southwest Research for DOS using a 15,000-pound (6,818-kg) vehicle, traveling at 50 mph (80 kph), that penetrated less than 3 feet (0.9 m). The manufacturer tested Model TT207FM, using a 15,000-pound (6,818-kg) vehicle, traveling at 50 mph (80 kph), that penetrated less than 3 feet (0.9 m).

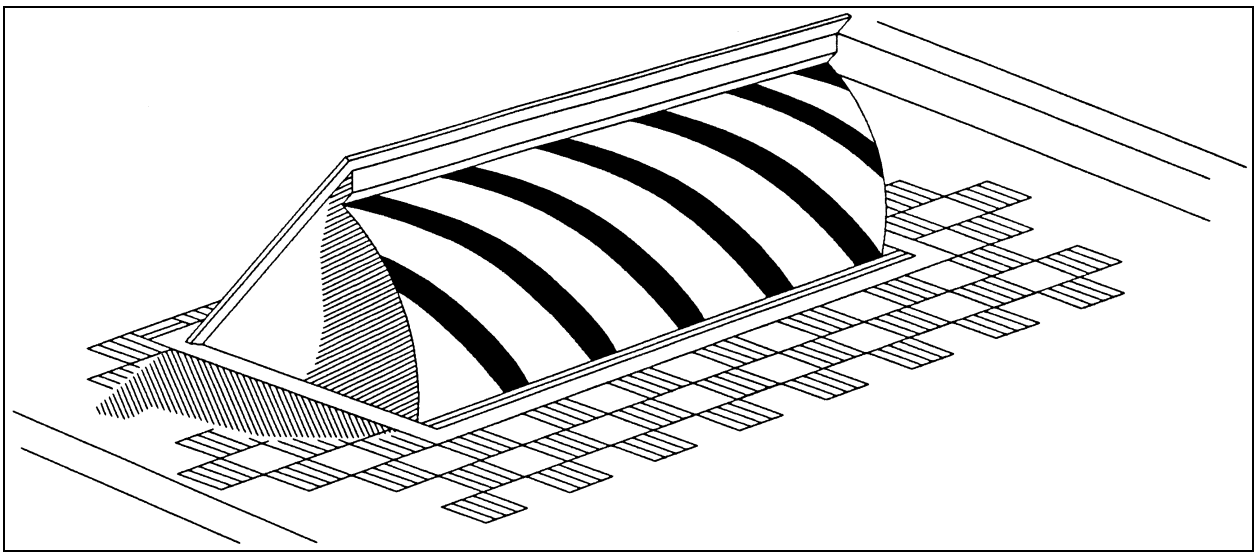

Figure 11
Delta TT205, TT207, and TT207S High-Security Barricade System

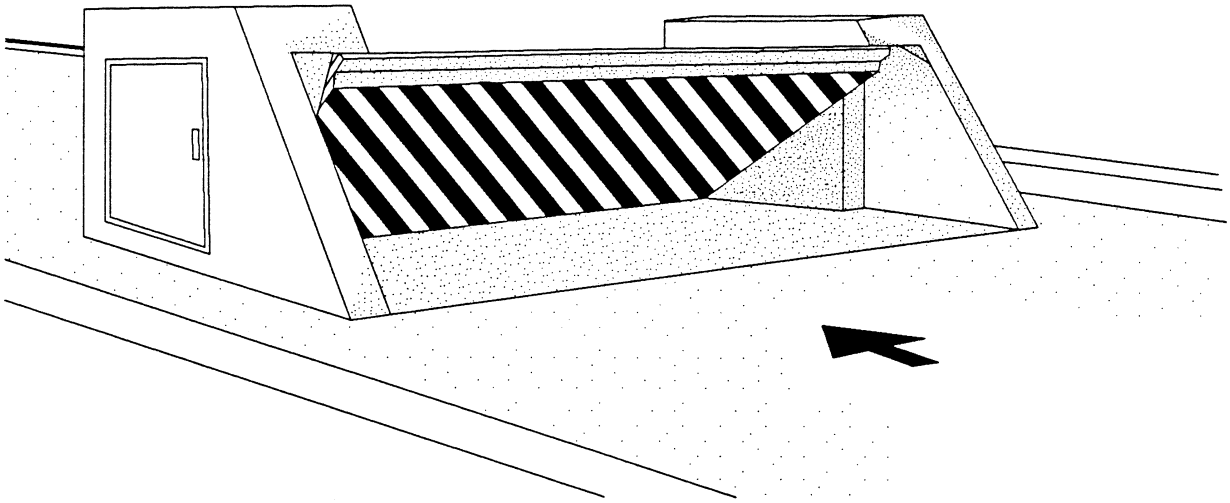

Figure 12
Delta TT207FM High-Security Barricade System (Flush-Mounted)

Table 5
Vehicle Barricades Available From Delta Scientific

| Model | TT205 | TT207 | TT207S* | TT207FM* |
|---|---|---|---|---|
| Height, inches (cm) | 24 (61) | 30 (76) | 38 (96) | 36 (91) |
| Width, inches (cm) | 84 to 144 (213 to 366) | 84 to 144 (213 to 366) | 84 to 144 (213 to 366) | 144 (366) |
| Normal operating cycle (seconds) | 3 to 15 | 3 to 15 | 3 to 15 | 3 to 15 |
| Emergency operating cycle (seconds) | <1.5 | <1.5 | <1.5 | <1.5 |
| Kinetic energy absorbed in impact testing, ft-lbf (kgf-m) x one million | NA | 1.2 (0.16) | 1.2 (0.16) | 1.2 (0.16) |
| Kinetic energy rating by engineering analysis, ft-lbf (kgf-m) x one million (destruction of vehicle with some damage to barrier) | 2.75 (0.38) | 3.1 (0.43) | 4.0 (0.55) | 3.2 (0.44) |
| Barrier cost, $ x one thousand for a single system. Optional items are extra. | NA | NA | 30 | 30 |
| Installation cost as a percentage of equipment cost | NA | NA | 30 | 30 |

*DOS certified
S = Department of State Modified ; FM = Flush-Mounted; NA = Not Available

8.1.3 Delta Scientific Bollard Systems

8.1.3.1 Description. Delta models TT203 and TT210, shown in Figure 13, are 8- or 10-inch (20.3- or 25.4-cm) diameter steel bollards that are 24 inches (0.61 m) and 30 inches (0.76 m) high, respectively. They can be lifted into position either manually (60-pound (27-kg) pull) or hydraulically. The compact size [8-inch (20.3-cm)] and ease of operation make this system particularly well suited as either a stand-alone or as a backup to existing pedestrian gates in the single post configuration. They can also be used to secure wide entrances when the cost for installing larger systems becomes prohibitive.

Hydraulically operated bollards can be operated individually or in sets, with up to 24 bollards controlled from a single hydraulic power unit. Performance and cost data are shown in Table 6.

8.1.3.2 Testing. The Sandia National Laboratory tested the TT203 with a 15,180-pound (6,900-kg) vehicle at 32 mph (51 kph), penetrating the barrier 12.2 feet (3.7 m). The TT210 was tested by the NFESC and DOS with a 10,000-pound (4,545-kg) vehicle at 40 mph (64 kph) that failed to penetrate the barrier.

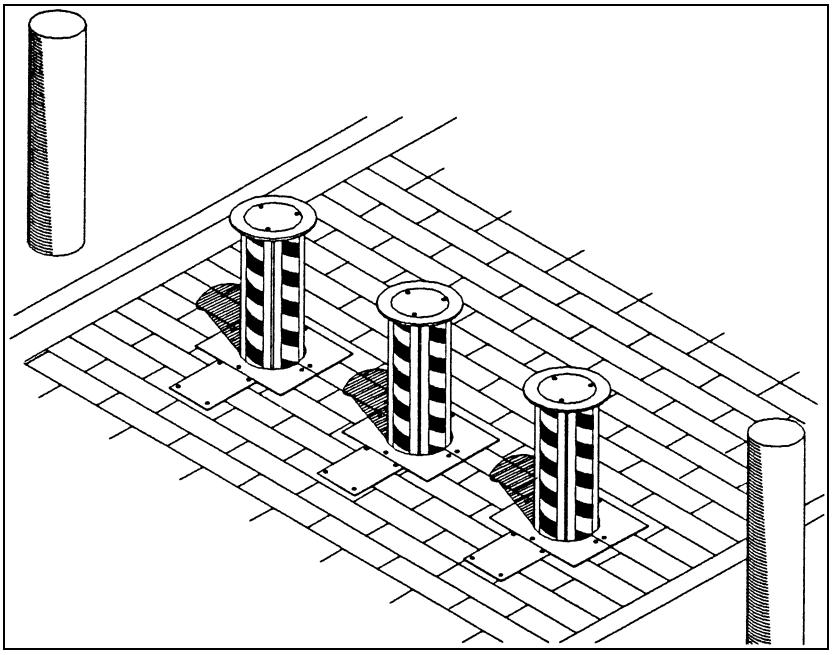

Figure 13
Delta Models TT203 and TT210 Bollard Systems

Table 6
Bollard Systems Available From Delta Scientific

| **Model** | **TT203** | **TT203M** | **TT210*** | **TT210M** |
|---|---|---|---|---|
| Height, inches (cm) | 24 (61) | 24 (61) | 30 (76) | 30 (76) |
| Width, inches (cm) | 8 (20) @ 2 ft (0.6 m) on center | 8 (20) @ 2 ft (0.6 m) on center | 10 (25) @ 2 ft (0.6 m) on center | 10 (25) @ 2 ft (0.6 m) on center |
| Normal operating cycle (seconds) | 3 to 15 | 3 to 15 | 3 to 15 | 3 to 15 |
| Emergency operating cycle (seconds) | <1.5 | <1.5 | <1.5 | <1.5 |
| Kinetic energy absorbed in impact testing, ft-lbf (kgf-m) x one million | 0.349 (0.048) | 0.349 (0.048) | 0.445 (0.06) | 0.445 (0.06) |
| Kinetic energy rating by engineering analysis, ft-lbf (kgf-m) x one million (destruction of vehicle with some damage to barrier) | 1.2 (0.16) | 1.2 (0.16) | 1.9 (0.26) | 1.9 (0.26) |
| Barrier cost, $ x one thousand for a single system. Optional items are extra. | NA | NA | 10 for 1 Bollard | NA |
| Installation cost as a percentage of equipment cost | NA | NA | 45 | NA |

*DOS certified
M = Manual Operation; NA = Not Available

8.1.4 Delta Scientific Crash Beam Barrier System

8.1.4.1 Description. Delta Models TT212 and TT212E, shown in Figure 14, are cable-reinforced, manually or hydraulically operated, bollard-mounted barriers. The beam is counterbalanced and lifts at one end to allow vehicle access. This system is frequently used for low impact conditions (when vehicle speed can be limited) and as the interior barrier (after a primary high impact barrier) for vehicle inspection areas or sally ports. Performance and cost data are shown in Table 7.

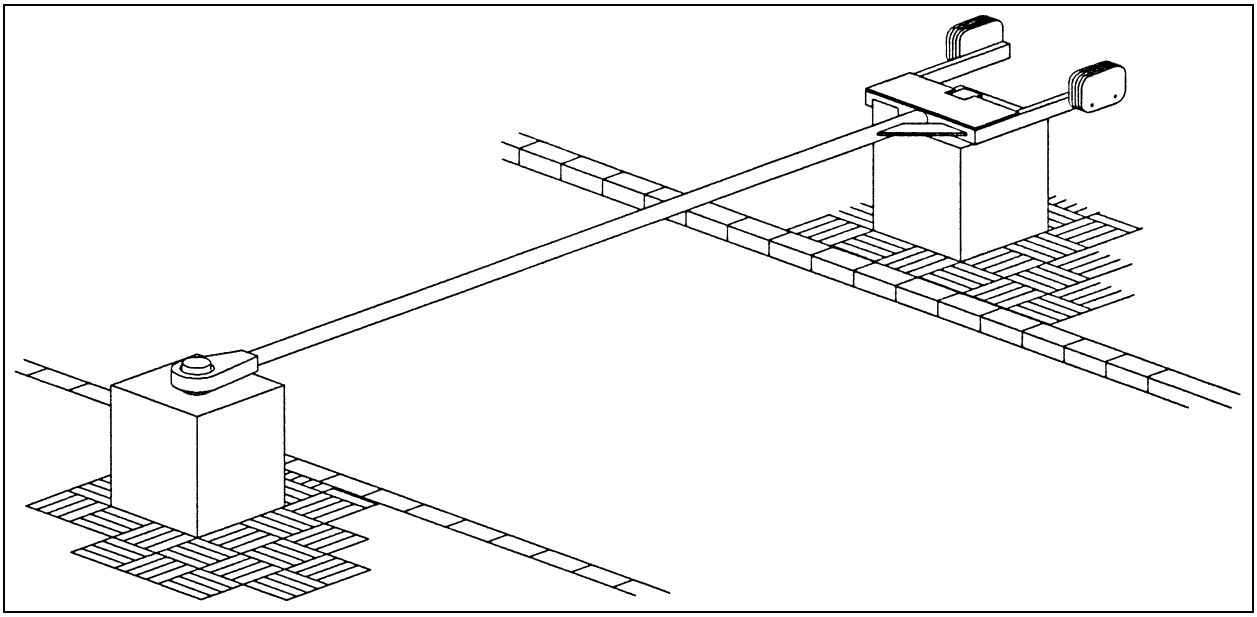

Figure 14
Delta Models TT212 and TT212E Cable-Reinforced Crash Beams

Table 7
Cable-Reinforced Crash Beams Available From Delta Scientific

| **Model** | **TT212** | **TT212E** |
|---|---|---|
| Height, inches (cm) | 30 (76) to 36 (91) | 30 (76) to (91) |
| Length, inches (cm) | 120 (305) to 240 (610) | 120 (305) to 240 (610) |
| Normal operating cycle (seconds) | 8 to 15 | 8 to 15 |
| Emergency operating cycle (seconds) | Not available | Not available |
| Kinetic energy absorbed in impact testing, ft-lbf (kgf-m) x one million | 0.108 (0.014) | 0.410 (0.056) |
| Kinetic energy rating by engineering analysis, ft-lbf (kgf-m) x one million (destruction of vehicle with some damage to barrier) | 0.410 (0.056) | NA |
| Barrier cost, $ x one thousand for a single system. Optional items are extra. | 5 to 10 | 5 to 10 |
| Installation cost as a percentage of equipment cost | 15 | 15 |

E = Enhanced; NA = Not Available

8.1.4.2 Testing. This barrier was tested by the NFESC at the China Lake test facility. A 10,000-pound (4,545-kg) vehicle at 17 mph (27 kph) impacted the barrier (TT212) and rebounded.

8.1.5 Delta Scientific Linear Crash Gate System

8.1.5.1 Description. Delta Model TT280, shown in Figure 15, is a sliding gate that offers pedestrian access and resistance to heavy vehicle impact. It is electromechanically operated with a 30-(9 m) to 100-(30 m) foot per minute sliding speed (instantly reversible). Safety infrared sensors and front edge obstacle sensors are standard features. Gate systems are normally used where esthetics is an issue or where wide opening is required [up to 25-foot (7.6 m) clear opening]. Performance and cost data are shown in Table 8.

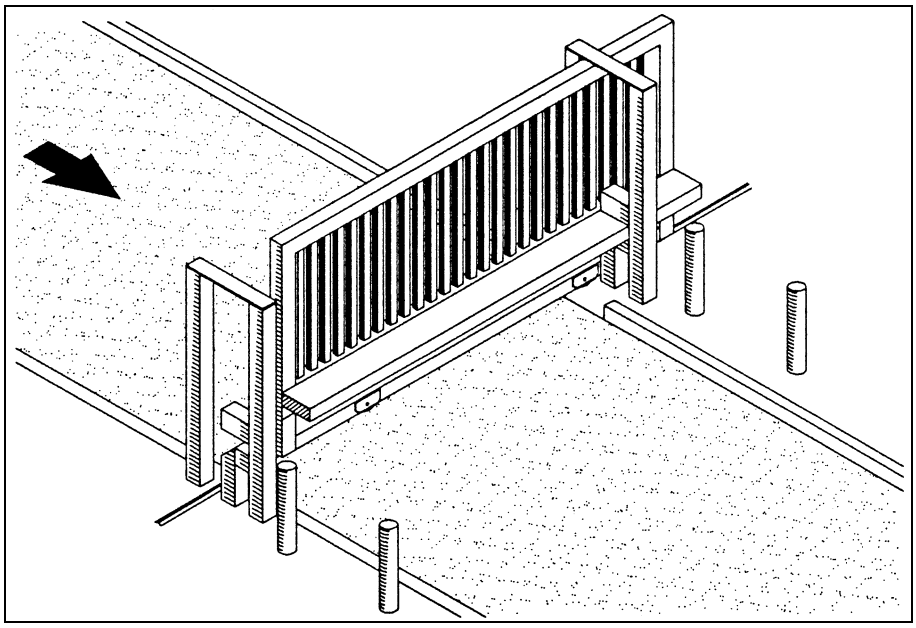

Figure 15
Delta Model TT280 Linear Crash Gate

Table 8
Linear Crash Gates Available From Delta Scientific

| Model | TT280* | TT281 |
|---|---|---|
| Height, inches (cm) | 108 (274) | 40 (102) |
| Length, inches (cm) | 144 (365) to 300 (762) | 144 (365) to 300 (762) |
| Normal operating cycle (Feet (meters) per minute) | 30 (9) to 100 (30) | 30 (9) to 100 (30) |
| Emergency operating cycle (seconds) | Not applicable | Not applicable |
| Kinetic energy absorbed in impact testing, ft-lbf (kgf-m) x one million | 1.2 (0.16) | 1.2 (0.16) |
| Kinetic energy rating by engineering analysis, ft-lbf (kgf-m) x one million (destruction of vehicle with some damage to barrier) | 2.6 (0.36) | 2.6 (0.36) |
| Barrier cost, $ x one thousand for a single system. Optional items are extra. | 27 | 5 to 10 |
| Installation cost as a percentage of equipment cost | 30 | 15 |

*DOS certified

8.1.5.2 Testing. Three tests were conducted on the TT280 by the NFESC, in conjunction with DOS, using vehicles weighing approximately 15,000 pounds (6,818 kg). At speeds of 34 and 40 mph (55 and 65 kph), the vehicle did not penetrate the sliding gate. At 55 mph (89 kph), the vehicle penetrated the sliding gate 5.5 feet (1.7 m).

8.1.6 Nasatka Maximum Security Barrier (NMSB)

8.1.6.1 Description. The Nasatka NMSB II vehicle barrier (Figure 16) is a hydraulically operated barrier, 31 inches (79 cm) high by 14 feet (4.3 m) wide. It has a fully electronic, programmable controller that provides a range of functions. Multiple barriers can be controlled from a single hydraulic power system. Models NMSB II and NMSB IIIb can be moved without roadway rebuilding. Installation can be completed in 24 hours by bolting the barriers to the roadway. Models NMSB II, NMSB IIIb, and NMSB IV are certified by DOS.

The NMSB IV is an underground, flush-mounted barrier, as shown in Figure 17. The NMSB IIIb and VIIa are similar in construction and operation, varying only in the height of the barrier and surface foundation pad construction, as shown in Figure 18. Performance and cost data are shown in Table 9.

NMSB XI (Figure 19) is a surface-mounted barrier with a gate arm that is also available from Nasatka. It has been crash-tested by the manufacturer. This system is frequently used for low impact conditions (when vehicle speed can be limited) and as the inside barrier (after a primary high impact barrier) for vehicle inspection areas or sally ports. Performance and cost data are shown in Table 9.

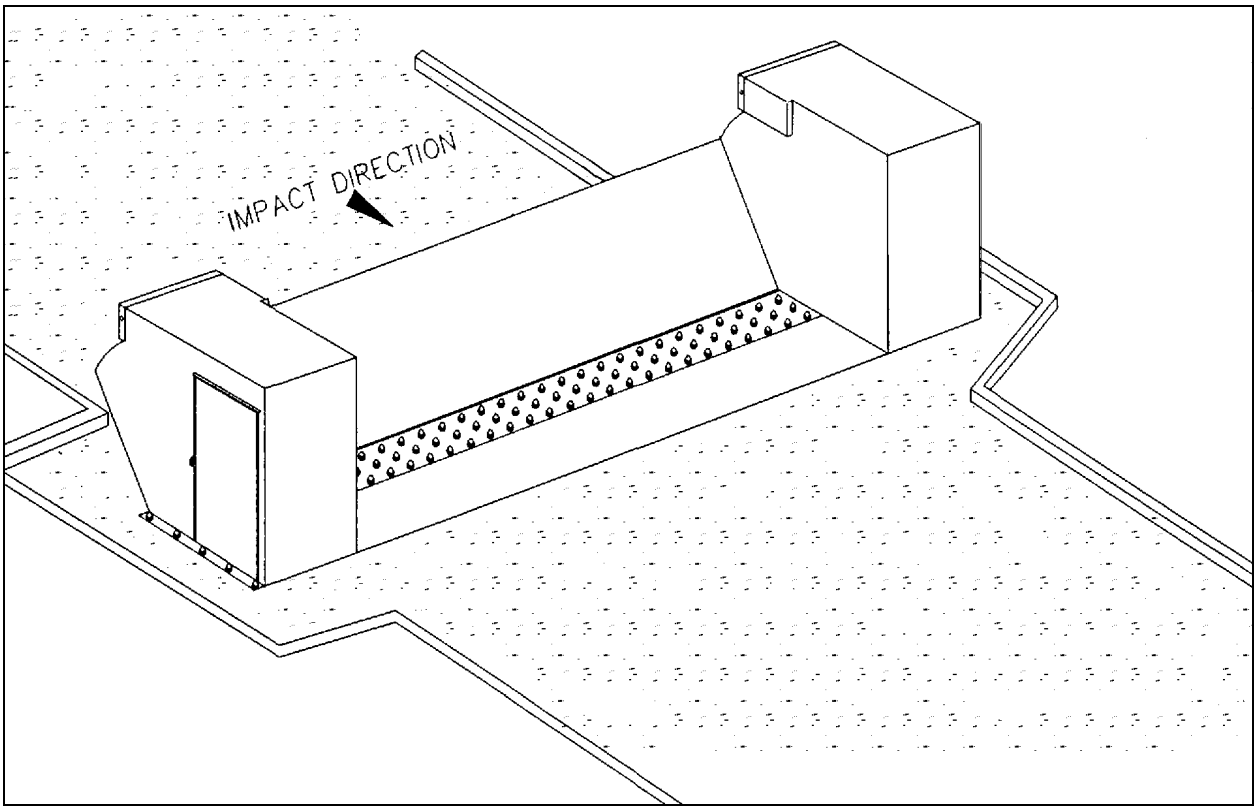


Figure 16
NMSB II Vehicle Barrier

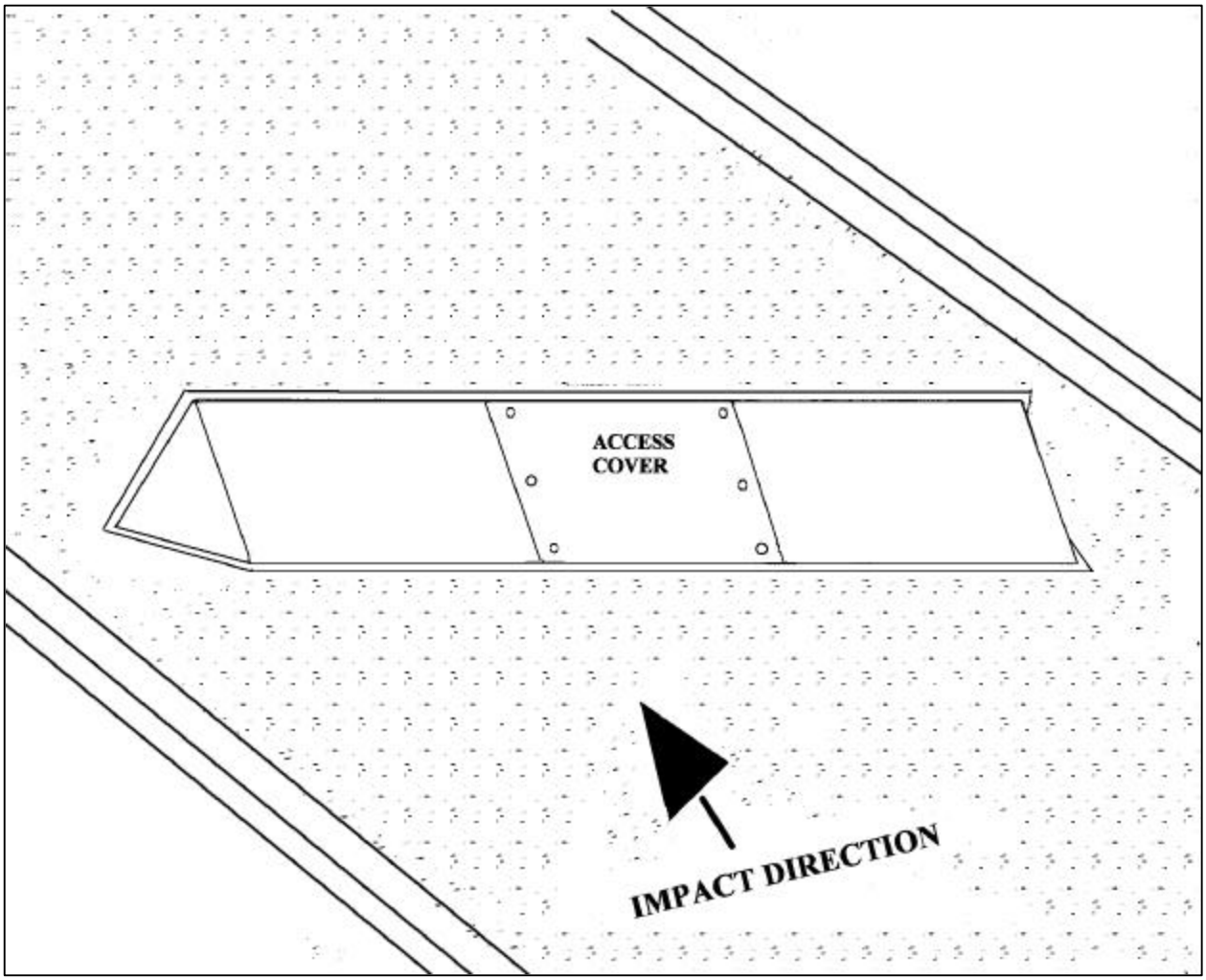


Figure 17
NMSB IV Vehicle Barrier

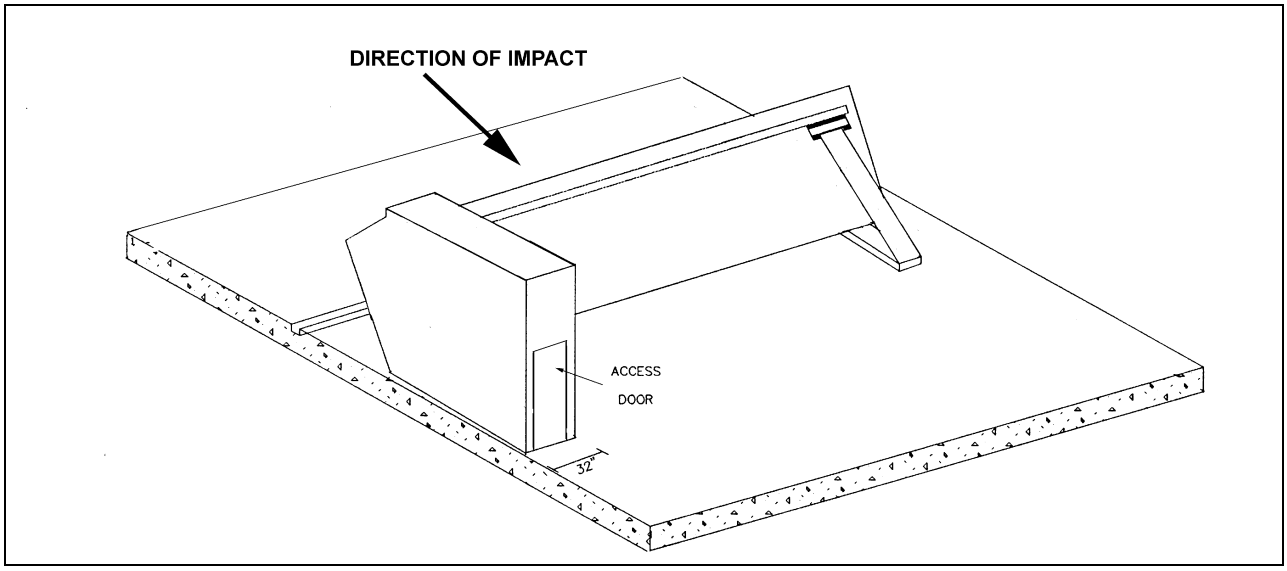


Figure 18
NMSB IIIb Vehicle Barrier

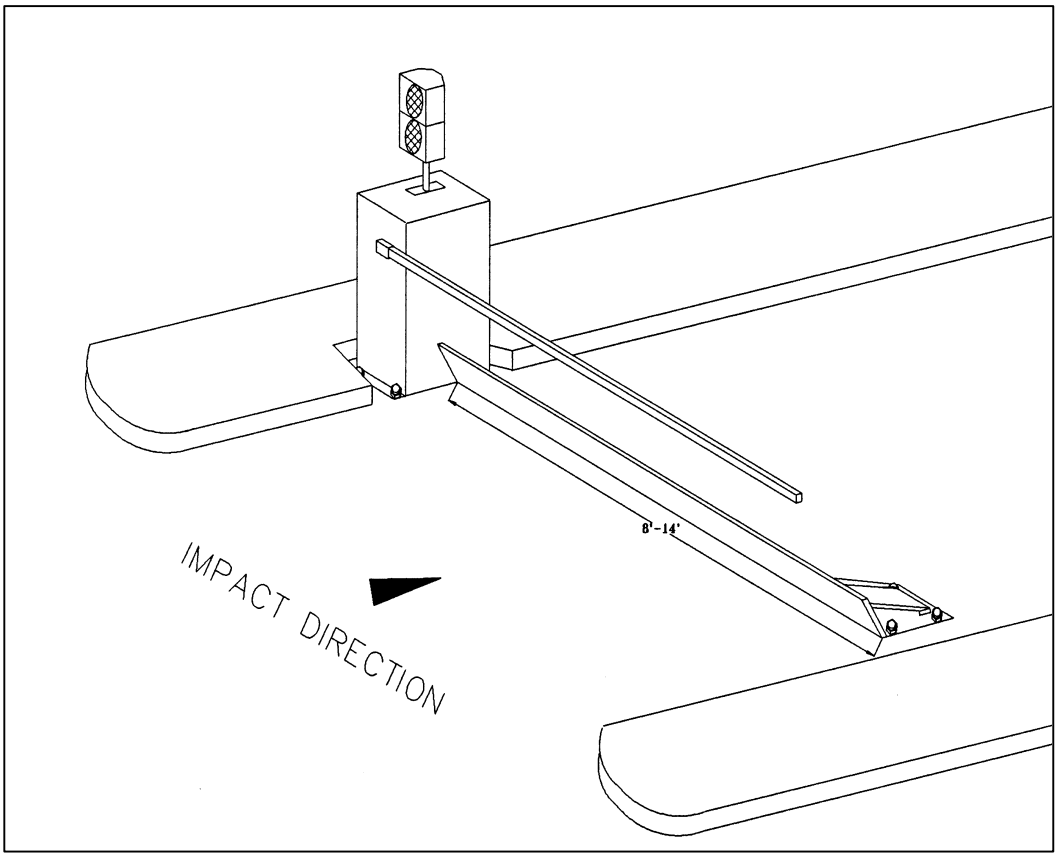


Figure 19
NMSB XI Vehicle Barrier

Table 9
NMSB Vehicle Barriers Available From Nasatka

| Model | NMSB II* | NMSB IIIb* | NMSB IV* | NMSB VIIa | NMSB XI |
|---|---|---|---|---|---|
| Height, inches (cm) | 31 (79) | 33 (84) | 31 (79) | 28 (71) | 20 |
| Width, inches (cm) | 168 (427) 10 ft (3m) clear | 168 (427) 10 ft (3m) clear | 168 (427) 9 ft (2.7m) clear | 168 (427) 10 ft (3m) clear | 168 (427) 10 ft (3m) clear |
| Normal operating cycle (seconds) | 3 to 5 | 3 to 5 | 3 to 5 | 3 to 5 | 3 |
| Emergency operating cycle (seconds) | 1 | 1 | 1 | 1 | NA |
| Kinetic energy absorbed in impact testing, ft-lbf (kgf-m) x one million | 1.2 (0.16) | 1.2 (0.16) | 1.2 (0.16) | 0.8 (0.11) | 0.12 (0.016) |
| Kinetic energy rating by engineering analysis, ft-lbf (kgf-m) x one million (destruction of vehicle with some damage to barrier) | NA | NA | NA | NA | NA |
| Barrier cost, $ x one thousand for a single system. Optional items are extra. | 13 | 24 | 18 | 15 | 10 |
| Installation cost as a percentage of equipment cost | 60 | 35 | 60 | 40 | 40 |

*DOS certified
NA = Not Available

8.1.6.2 Testing. The NMSB II was tested by NFESC, in conjunction with DOS. A 14,980-pound (6,809-kg) vehicle at 50.3 mph (81 kph) failed to penetrate.

8.1.7 OMNISEC Defender Bollard

8.1.7.1 Description. The Defender, shown in Figure 20, is a 10-inch (25-cm) diameter by 30-inch (76-cm) high, vertical-lift, steel bollard that can be lifted into position, either manually or hydraulically. The compact size [10 inches (25.4 cm)] and ease of operation make this system

particularly well suited as either a stand-alone or as a backup to existing pedestrian gates in the single post configuration. They can also be used to secure wide entrances when the cost for installing larger systems becomes prohibitive. Performance and cost data are shown in Table 10.

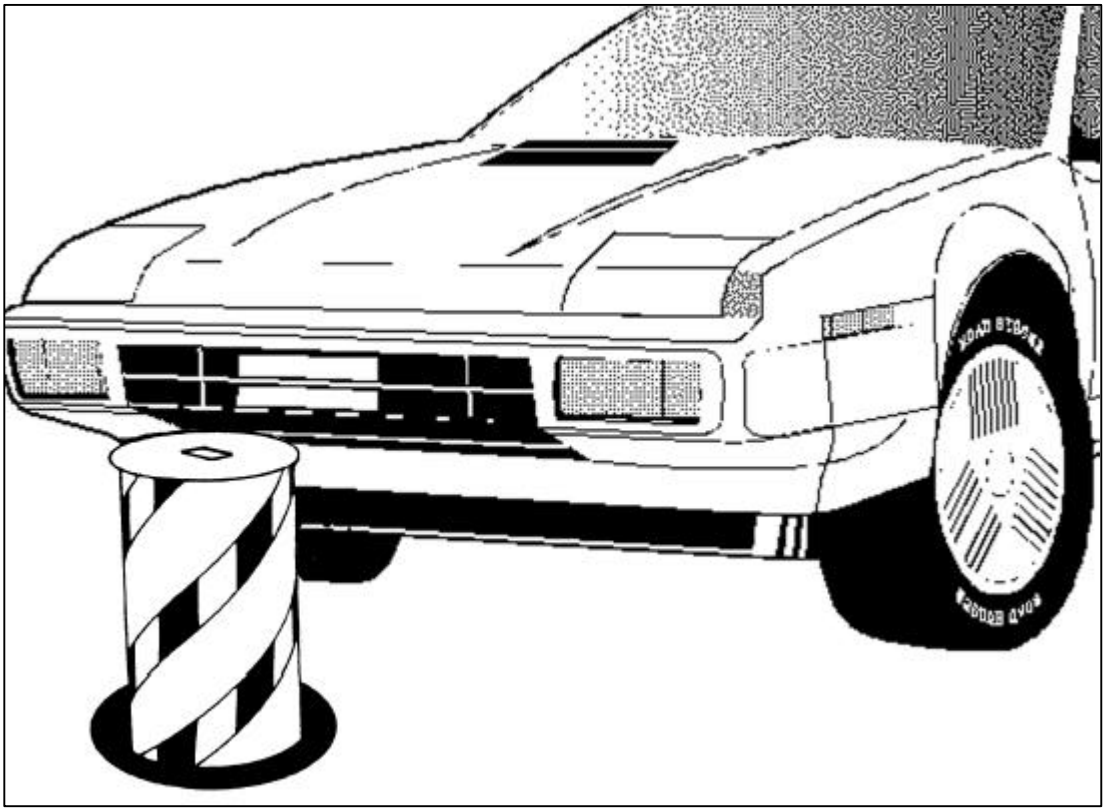

Figure 20
OMNISEC Defender Vehicle Barrier System

Table 10
Defender Barrier System Available From OMNISEC

| Model | Defender* |
|---|---|
| Height, inches (cm) | 30 (76) |
| Width, inches (cm) | 10 (25) @ 3 ft (0.9 m) on center |
| Normal operating cycle (seconds) | 4 to 6 |
| Emergency operating cycle (seconds) | <1.5 |
| Kinetic energy absorbed in impact testing, ft-lbf (kgf-m) x one million | 0.445 (0.06) |
| Kinetic energy rating by engineering analysis, ft-lbf (kgf-m) x one million (destruction of vehicle with some damage to barrier) | NA |
| Barrier cost, $ x one thousand for a single system. Optional items are extra. | 15 to 20 depending on width of clear opening |
| Installation cost as a percentage of equipment cost | 75 |

*DOS certified
NA = Not Available

8.1.7.2 Testing. A three-bollard system, spaced 3 feet (0.9 m) apart, was tested. A 14,885-pound (6,766-kg) vehicle traveling at 29 mph (47 kph) penetrated 10.5 feet (3 m).

8.1.8 OMNISEC Magnum Vehicle Barrier

8.1.8.1 Description. The Magnum barrier, shown in Figure 21, is a self-contained system that can be operated either manually or hydraulically. It consists of welded-steel members rotating around a heavy, solid-steel shaft at grade level. Three barrier widths are available: 8-, 10-, and 12-foot (2.4-, 3-, and 3.66-m). The Magnum requires a 4-foot (1.2-m) excavation for the foundation. An hydraulic cylinder raises the rotating members through linkages. These barriers are intended for high impact conditions.

OMNISEC also produces a shallow-mounted [13-inch (33-cm) deep excavation] vehicle barrier called the Stinger that is hinged in the front. Performance and cost data for both barriers are shown in Table 11.

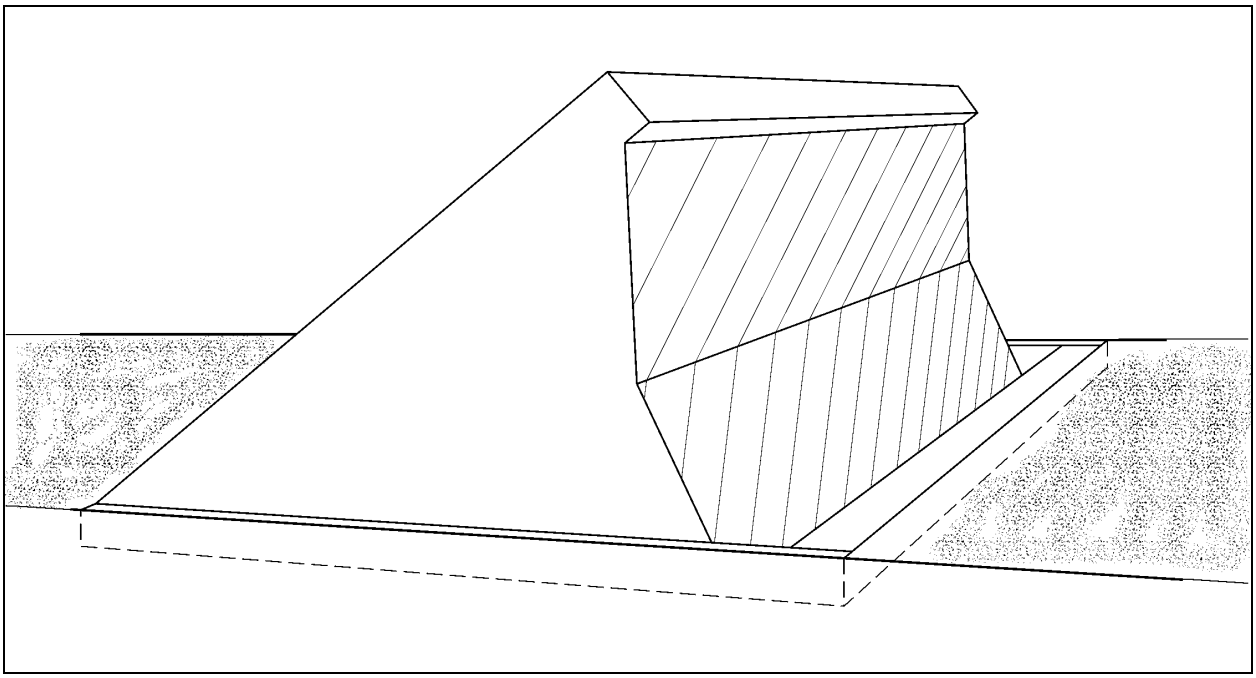

Figure 21
OMNISEC Magnum Vehicle Barrier

Table 11
Magnum and Stinger Vehicle Barriers Available From OMNISEC

| Model | Stinger* | Magnum* |
|---|---|---|
| Height, inches (cm) | 44 (112) | 32 (81) |
| Width, inches (cm) | 96 to 144 (243 to 365) | 96 to 144 (243 to 365) |
| Normal operating cycle (seconds) | 4 to 6 | 4 to 6 |
| Emergency operating cycle (seconds) | <1.5 | <1.5 |
| Kinetic energy absorbed in impact testing, ft-lbf (kgf-m) x one million | 1.2 (0.16) | 1.2 (0.16) |
| Kinetic energy rating by engineering analysis, ft-lbf (kgf-m) x one million (destruction of vehicle with some damage to barrier) | NA | NA |
| Barrier cost, $ x one thousand for a single system. Optional items are extra. | 20 to 40 depending on width of clear opening | 20 to 40 depending on width of clear opening |
| Installation cost as a percentage of equipment cost | 70 | 75 |

*DOS certified
NA =Not Available

8.1.8.2 Testing. The Magnum and Stinger barriers were both tested with a 15,000-pound (6,818-kg) vehicle, traveling at 50 mph (80 kph), that failed to penetrate either barrier.

8.1.9 OMNISEC Portapungi

8.1.9.1 Description. The Portapungi shown in Figure 22 is a lever-actuated system designed to immobilize a vehicle by engaging the front axle. It is 23 inches (58 cm) high and comes in 8-, 10-, and 12-foot (2.4-, 3-, and 3.66-m) widths. The system is portable and can be operated from either the left or right side (manually or hydraulically).

An optional transport kit is available for moving the barrier from point to point. The system can be set up within minutes. This barrier is best used for temporary installations, or where high water table is a concern. Performance and cost data are shown in Table 12.

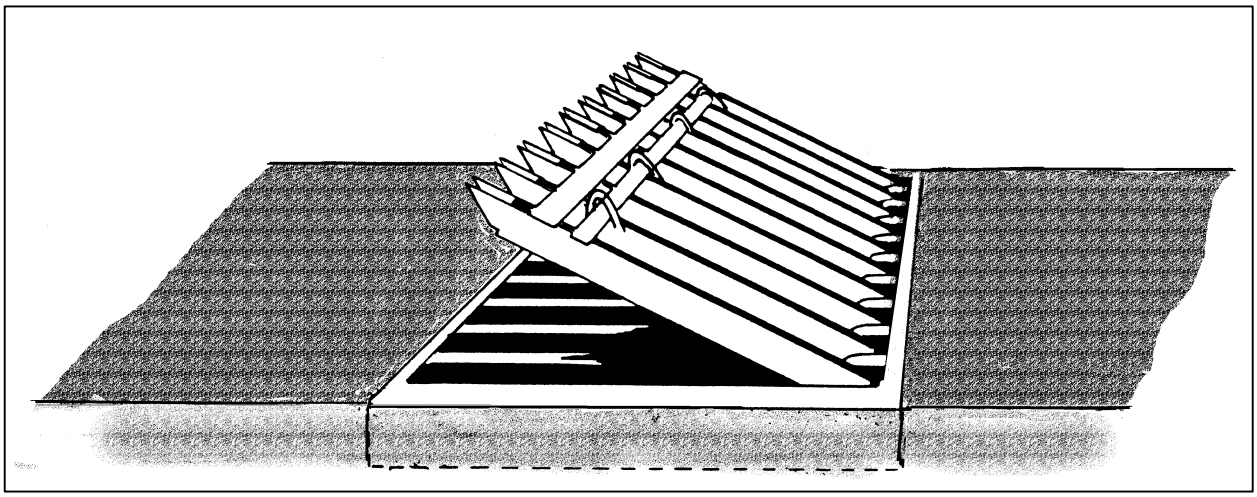

Figure 22
Portapungi Vehicle Barrier

Table 12
Portapungi Vehicle Barrier Available From OMNISEC

| **Model** | **Portapungi*** |
|---|---|
| Height, inches (cm) | 35 (89) |
| Width, inches (cm) | 96 to 120 (243 to 304) |
| Normal operating cycle (feet (meters) per minute) | 4 to 6 |
| Emergency operating cycle (seconds) | <1.5 |
| Kinetic energy absorbed in impact testing, ft-lbf (kgf-m) x one million | 0.8 (0.11) |
| Kinetic energy rating by engineering analysis, ft-lbf (kgf-m) x one million (destruction of vehicle with some damage to barrier) | NA |
| Barrier cost, $ x one thousand for a single system. Optional items are extra. | 20 to 35 depending on width of clear opening |
| Installation cost as a percentage of equipment cost | 65 |

*DOS certified
NA = Not Available

8.1.9.2 Testing. The Portapungi was tested with a 14,900-pound (6,772-kg) vehicle, traveling at 40 mph (64 kph), that penetrated the barrier 40 feet (12 m).

8.1.10 OMNISEC SEMA-4 High-Impact Crash Beam

8.1.10.1 Description. OMNISEC also produces a low-security barrier, shown in Figure 23, that is a cable-reinforced, manually or hydraulically operated, post-mounted, steel tube barrier. The beam is counterbalanced and lifts at one end to allow vehicle access. Standard widths are from 144 to 240 inches (366 to 610 cm) in 12-inch (30-cm) increments. This system is frequently used for low-impact conditions (when vehicle speed can be limited) and as the interior barrier (after a primary high-impact barrier) for vehicle inspection areas or sally ports. Performance and cost data are shown in Table 13.

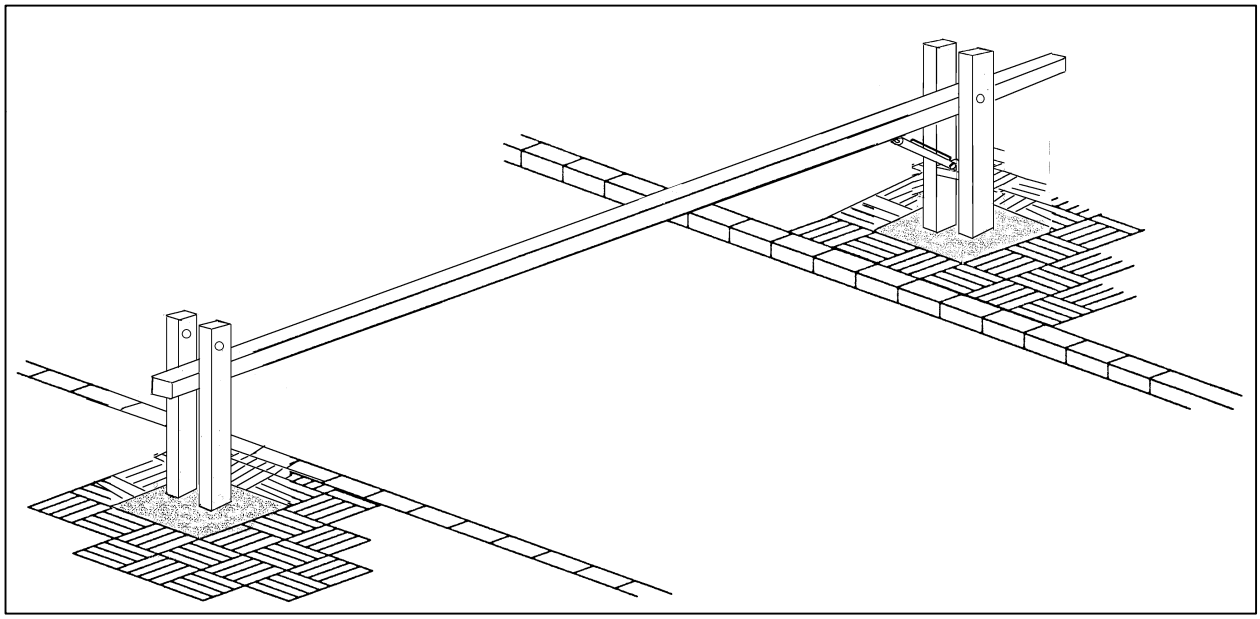

Figure 23
SEMA-4 Vehicle Barrier System

Table 13
SEMA-4 Vehicle Barrier Available From OMNISEC

| **Model** | **SEMA-4** |
|---|---|
| Height, inches (cm) | 40 (101) |
| Width, inches (cm) | 144 to 240 (366 to 610) |
| Normal operating cycle, feet (meters) per minute | 8 |
| Emergency operating cycle, seconds | NA |
| Kinetic energy absorbed in impact testing, ft-lbf (kgf-m) x one million | 0.034 (0.005) |
| Kinetic energy rating by engineering analysis, ft-lbf (kgf-m) x one million (destruction of vehicle with some damage to barrier) | NA |
| Barrier cost, $ x one thousand for a single system. Optional items are extra. | 4 to 5 depending on width of clear opening |
| Installation cost as a percentage of equipment cost | 65 |

NA=Not Available

8.1.10.2 Testing. The manufacturer tested this barrier with a 10,000-pound (4,545-kg) vehicle, traveling at 15 mph (24 kph), that failed to penetrate the barrier. This equates to kinetic energy absorption of 34,400 ft-lbf (4,700 kgf-m).

8.1.11 TYMETAL Fortified Impact Gate System

8.1.11.1 Description. TYMETAL has developed a vehicle crash resistant barrier system for use with their horizontal and vertical lift gates. The barrier can be used for both portable and permanent construction. The system consists of a beam or cable attached to the gate frame members and two precast concrete anchors with a specially designed, spring-loaded locking mechanism. The design will accommodate openings from 10 feet (3 m) to 60 feet (18.3 m).

8.1.11.2 Testing. This barrier has not been crash-tested; however, calculations provided by the manufacturer show it is designed to stop a 5,000-pound (2,272-kg) vehicle traveling at 30 mph (48 kph) with a penetration of less than 6 feet (1.8 m). Contact the manufacturer for cost data.

8.1.12 Mandell Armor CUTLASS

8.1.12.1 Description. The CUTLASS, shown in Figure 24, is manufactured by Mandel Armor and constructed as a complete assembly. No extensive site preparation is required. The system can be operated automatically or manually. The barriers can be produced in widths up to 30 feet (9 m). The system has a variety of optional features, including corrosion-resistant finish, safety

alarms, integral flood light stanchions, integral warning signals or strobes, and a mechanical locking feature for entrance sealing. The barrier is available with pneumatic, hydraulic, or electric actuators and can be designed to cycle in less than one second.

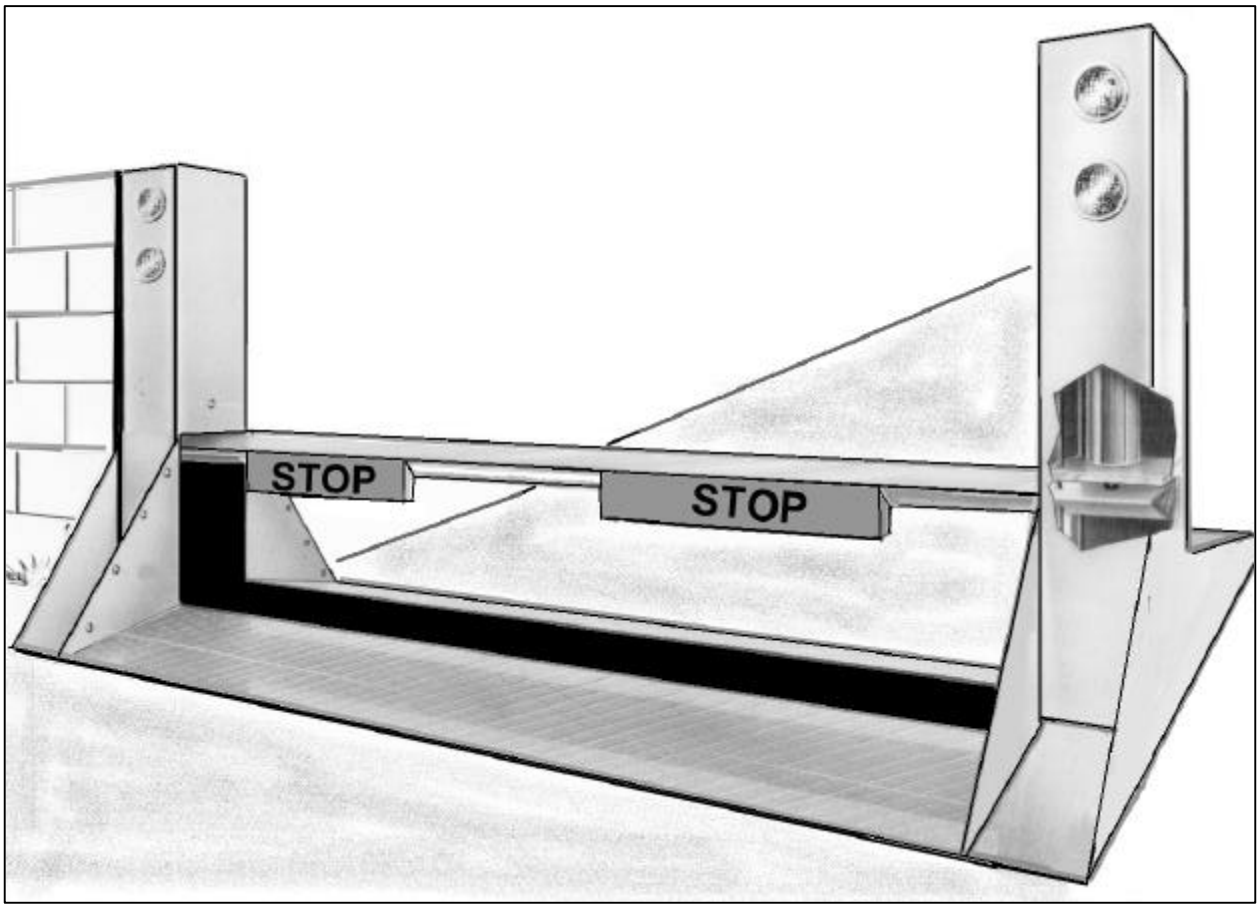


Figure 24
Mandell Armor CUTLASS Vehicle Barrier

8.1.12.2 Testing. This barrier has not been crash-tested.

8.2 Passive Barrier Systems. The following is a compilation of passive vehicle barrier systems used at DOD facilities. Included are generic systems that can be constructed with self-help projects, using standard, locally available materials. Some of the systems have not been formally tested, but should inflict substantial damage on a vehicle if impacted. Cost data for passive barrier systems is provided in Appendix C. A consolidated list of passive barriers, kinetic energy, and penetration data is provided in Appendix E.

8.2.1 Concrete-Filled Bollard

8.2.1.1 Description. Steel bollards for passive vehicle barriers should be made of 8-inch (20-cm) or 10-inch (25-cm) diameter, 1/2-inch (1.27-cm) wall, and 7-foot (2.1-m) long steel pipe filled with concrete. They should extend 3 feet (0.9 m) above the ground level from a 4-foot (1.2-m) footing, and be positioned 2 (0.6 m) to 4 (1.2 m) feet apart. The footing can be continuous, but individual footing depth should be at least twice the width, and the width should be three times the diameter of the pipe, as shown in Figure 25. Bollards can be placed on either the inside or the outside of existing fences.

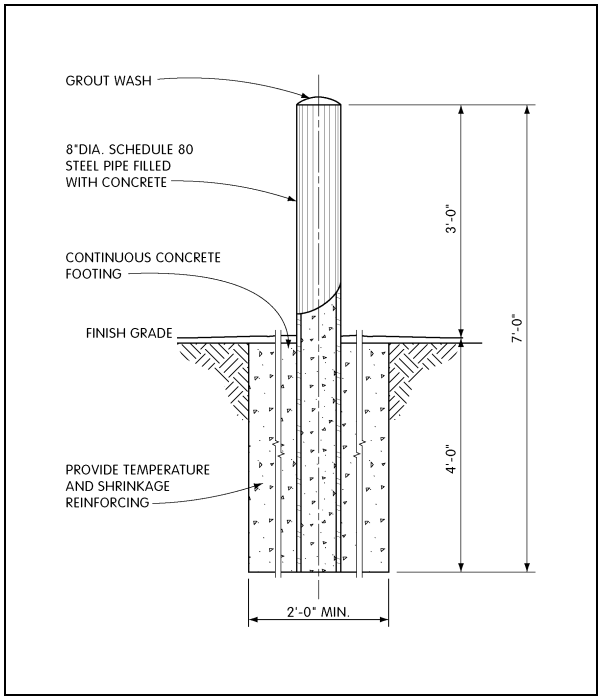


Scale: 1 foot = 0.3048 m

Figure 25
Construction Details for Bollards

8.2.1.2 Testing. A vehicle barrier system, consisting of 11, 8-inch (20-cm) diameter bollards connected with a 12-inch (30-cm) U-channel rail, was crash-tested with a 15,000-pound (6,818-kg) vehicle traveling at 47 mph (76 kph). The vehicle failed to penetrate. On another occasion, a vehicle with the same weight, but traveling at 43.5 mph (70 kph), penetrated the barrier a distance of 19.6 feet (6 m).

In another test, a single, 8-inch (20-cm) diameter, 1/2-inch (1.27-cm) wall steel pipe, concrete-filled bollard was impacted by a 4,500-pound (2,045-kg) pickup truck traveling at 30 mph (48 kph). The vehicle penetrated 17.5 feet (5.3 m).

8.2.2 Concrete Median

8.2.2.1 Description. A concrete highway median (also known as a Jersey Bounce or Jersey Barrier) can be effectively used as a perimeter vehicle barrier. It can either be erected from precast tongue-and-groove sections or cast in place with special concrete-forming equipment. It is especially effective for impact angles less than 30 degrees and is appropriate for locations where access roads are parallel to the barrier. Complete penetration is possible with light vehicles; however, damage to the vehicle will be extensive.

8.2.2.2 Testing. A non-reinforced, anchored, concrete median barrier was tested with a 4,000-pound (1,818-kg) vehicle at 50 mph (81 kph), penetrating the barrier 20 feet (6 m). The vehicle had extensive front-end damage, and the occupants would have received serious to critical injuries. During the impact, a section of the barrier was broken and overturned. These barriers should be set in a concrete foundation, as shown in Figure 26, for applications where the impact angle exceeds 30 degrees.

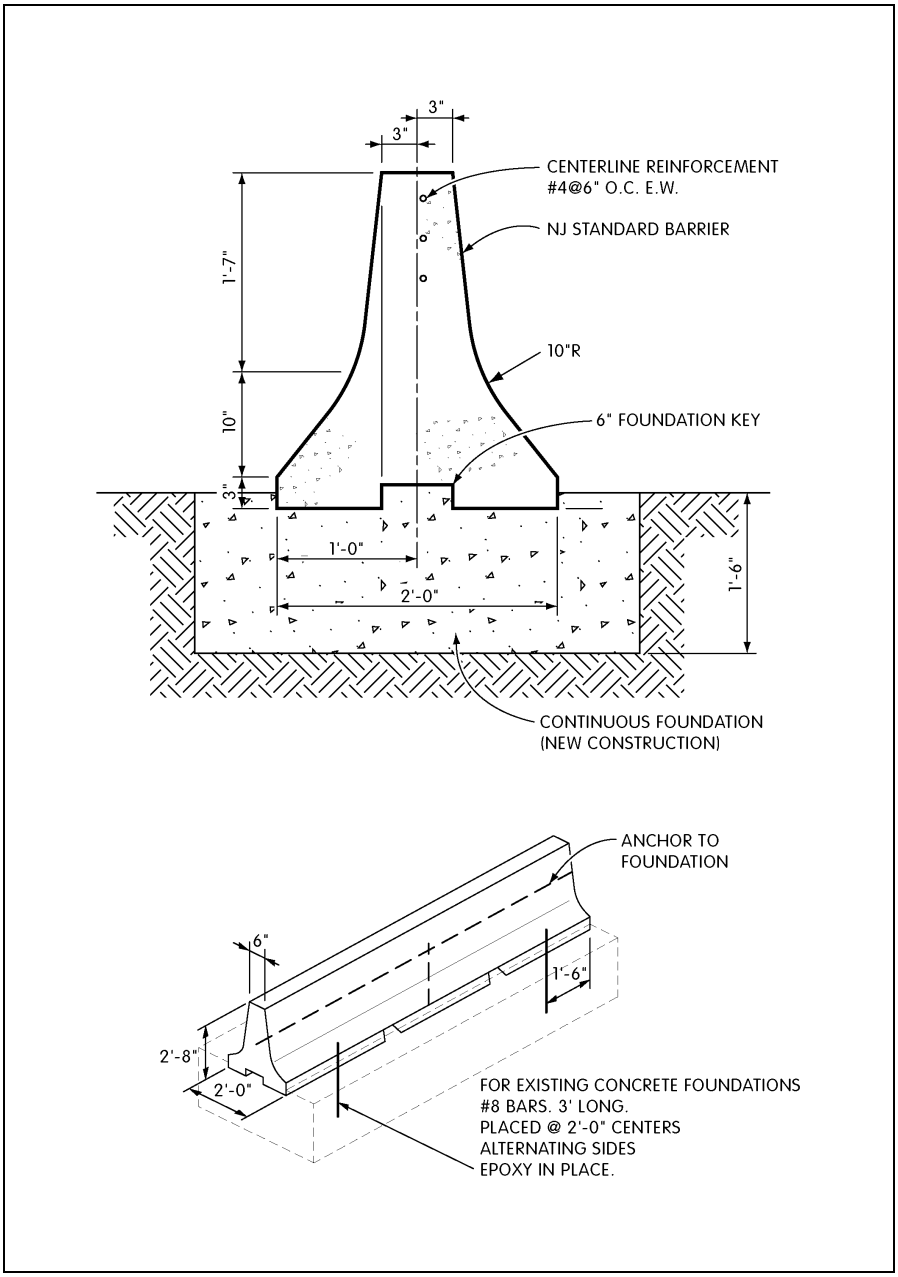


Scale: 1 foot = 0.3048 m
1 inch = 2.54 cm

Figure 26
Precast Non-Reinforced Concrete Median

8.2.3 Concrete Planter

8.2.3.1 Description. A concrete planter barrier (Figure 27) offers permanent protection from vehicle penetration and can also be aesthetically pleasing.

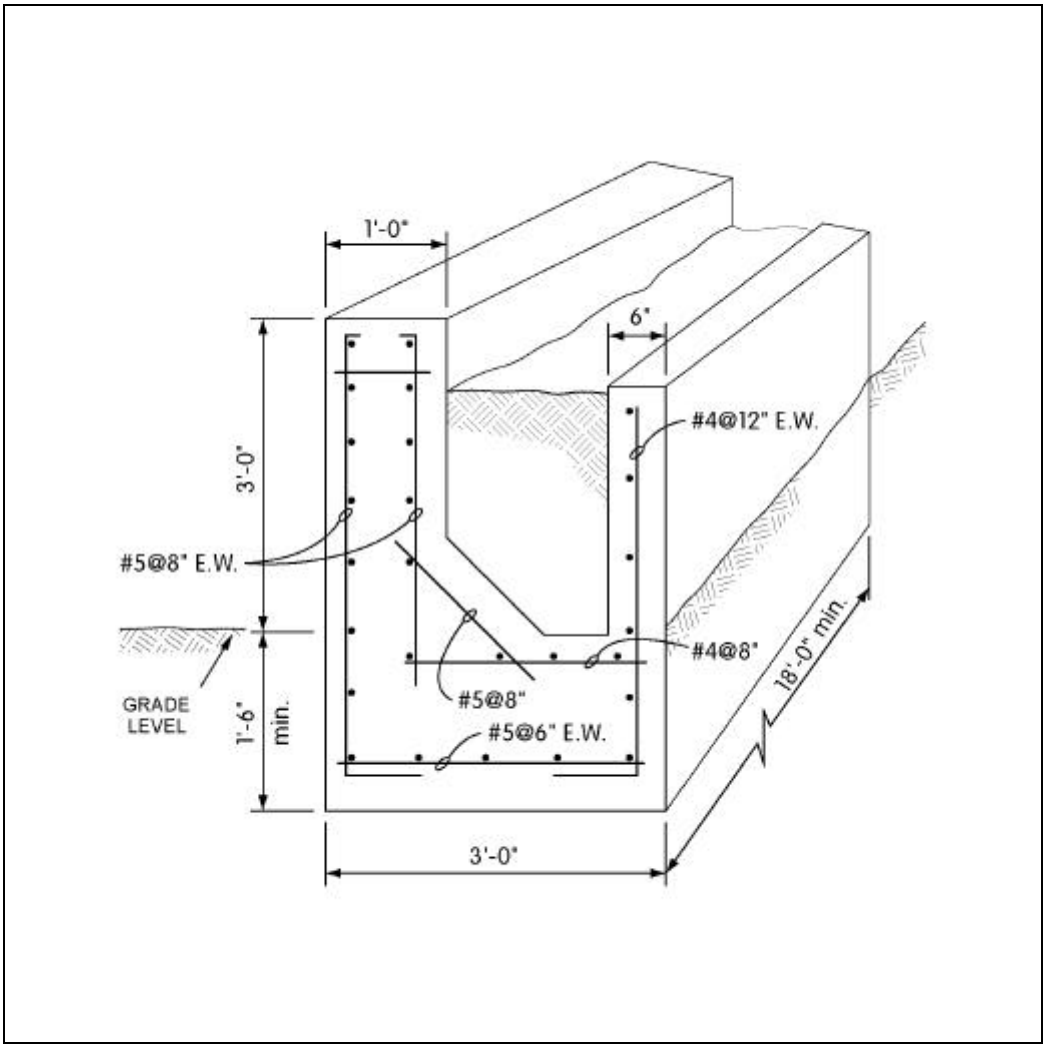


Scale: 1 foot = 0.3048 m
1 inch = 2.54 cm

Figure 27
Reinforced Concrete Planter

8.2.3.2 Testing. This barrier was tested with a 15,000-pound (6,818-kg) vehicle traveling at 47 mph. The vehicle did not penetrate the barrier.

8.2.4 Excavations and Ditches

8.2.4.1 Description. Excavations, berms, and ditches, shown in Figure 28, can be effectively used to stop vehicles from penetrating the restricted boundary. Triangular ditches and hillside cuts are easy to construct and very effective against a wide range of vehicle types. Side hill cuts are variations of the triangular ditch adapted to side hill locations and have the same advantages and limitations. A trapezoidal ditch requires more construction time, but is more effective in stopping a vehicle. With this type of construction, a vehicle will be trapped when the front end falls into the ditch and the undercarriage is hung up on the leading edge of the ditch.

8.2.4.2 Testing. None of these configurations have been tested. However, soil and rock will absorb large amounts of kinetic energy and should effectively stop most vehicles, if constructed according to the dimensions shown in Figure 28.

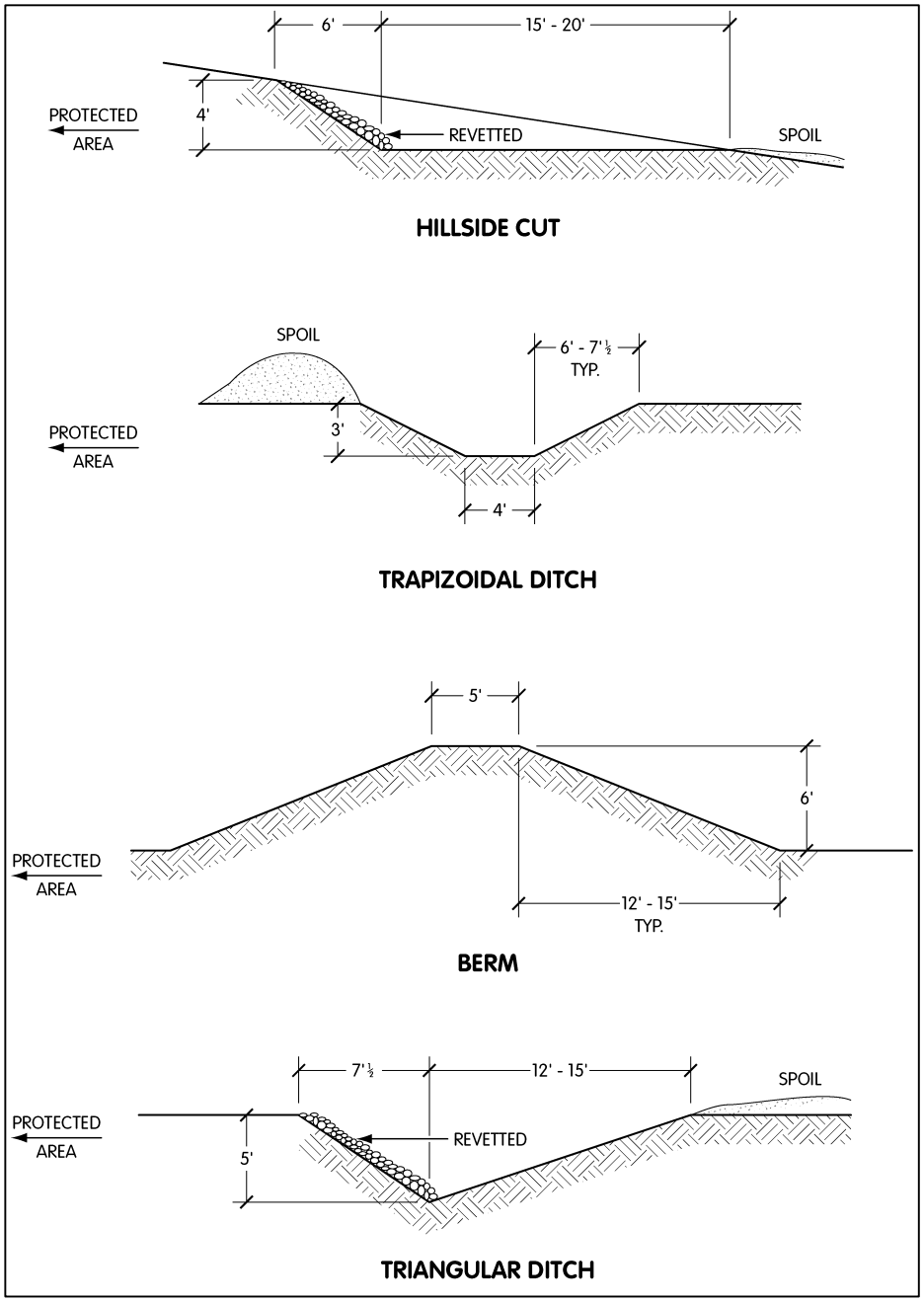


Scale: 1 foot = 0.3048 m
1 inch = 2.54 cm

Figure 28
Excavations, Berms, and Ditches

8.2.5 Guardrails

8.2.5.1 Description. Standard highway guardrails or median barriers can be used as perimeter vehicle barriers (Figure 29).

A cable guardrail consists of H-beams [2-1/4 inch (5.7-cm) x 4.1 pound/foot (6.1-kg/m)], spaced at 16 feet (4.9 m) on center, with two or three 3/4-inch (1.9-cm) diameter steel cables, spaced 8 inches (20 cm) apart. The height at the center cable is 26 inches (66 cm). The cables should be anchored to a reinforced concrete deadman at 200-foot (61-m) intervals (similar to Figure 35).

A W-beam guardrail consists of H-beams spaced on 12.5-foot (3.8-m) centers with steel "W" sections bolted to the H-beam. The height of this guardrail is 27 to 30 inches (68 to 76 cm).

A box-beam guardrail consists of H-beams, spaced on 4- to 6-foot (1.2- to 1.8-m) centers with a 6- by 6-inch (15- by 15-cm) steel tube bolted to the H-beams. The height of this guardrail is 27 to 30 inches (68 to 76 cm).

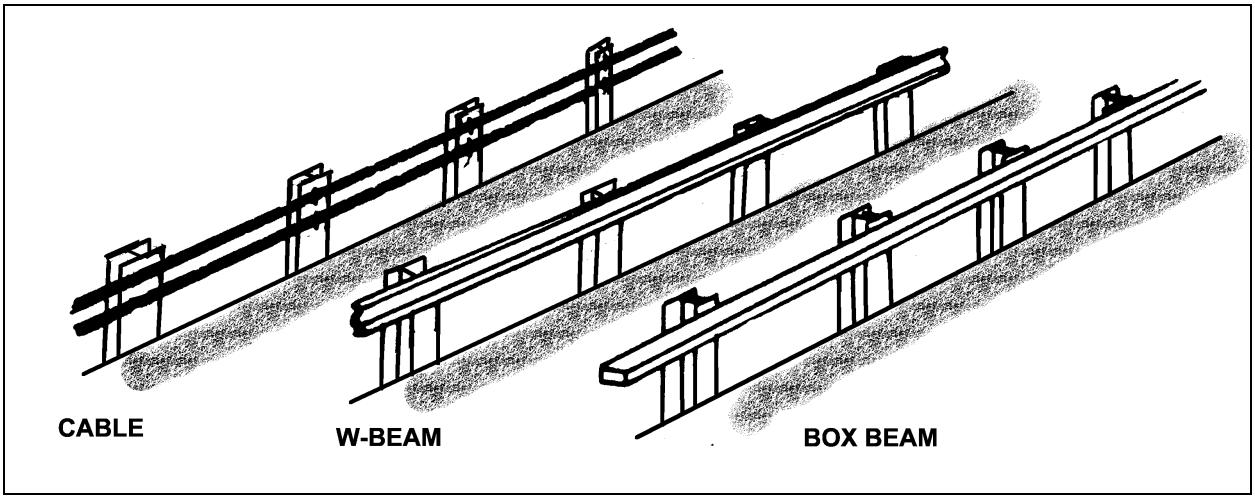


Figure 29
Guardrails

8.2.5.2 Testing. Although not tested to resist the effects of a perpendicular impact, a cable, W-beam, or box-beam guardrail, designed for highway use, should effectively deflect and, possibly, immobilize lightweight vehicles. They are specifically designed to deflect the energy of larger vehicles with an angled impact of less than 25 degrees (normal impact angle for highway design and most likely to produce vehicle rollover at high speeds).

8.2.6 Heavy Equipment Tires

8.2.6.1 Description. Heavy equipment tires, half-buried in the ground and tamped to hold them rigid, can be effective vehicle barriers (Figure 30). Use tires that are 7 to 8 feet (2.1 to 2.4 m) in diameter. Heavy equipment tires can usually be obtained locally from salvage operations for the cost of hauling them away.

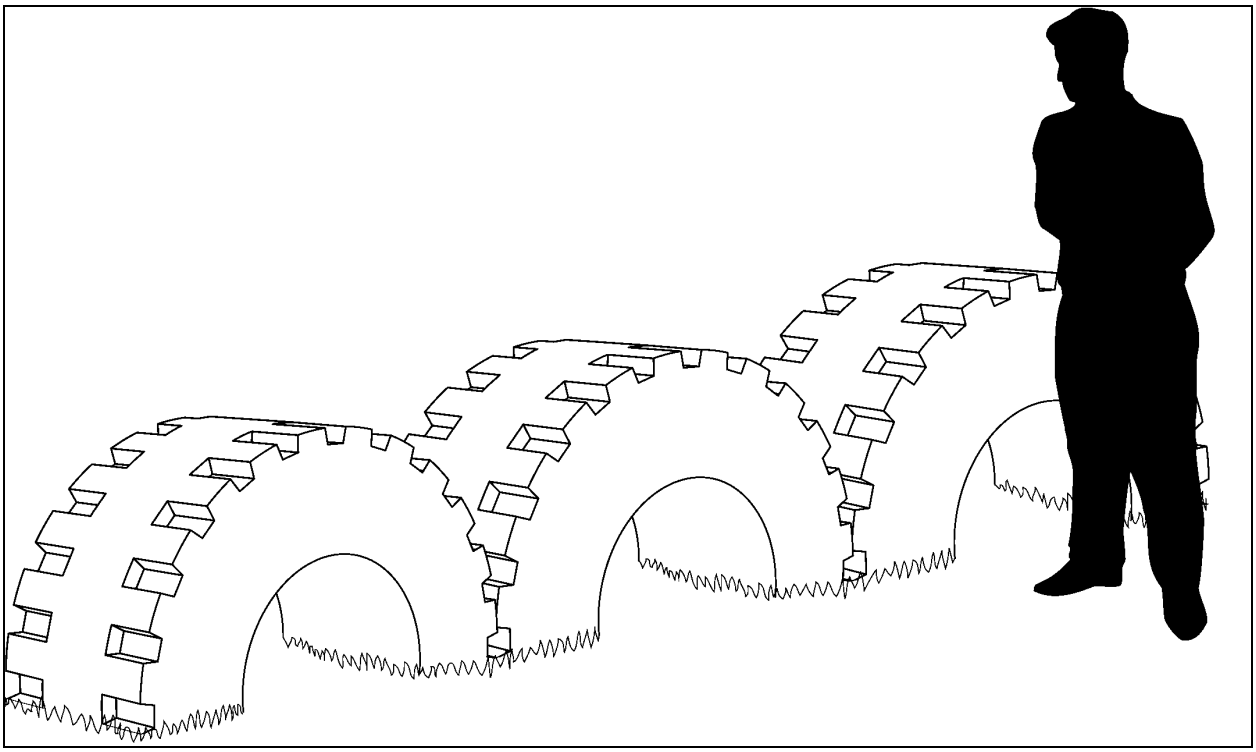

Figure 30
Heavy Equipment Tire Barrier

8.2.6.2 Testing. Buried equipment tires were tested using a 3,350-pound (1,523-kg) vehicle traveling at 51 mph (82 kph). The vehicle penetrated the barrier 1-foot (0.3-m). The tires used were 36 ply, 8 feet in diameter (2.4 m), and weighed 2,000 pounds (909 kg) each.

8.2.7 Tire Shredders

8.2.7.1 Description. Tire shredders can be either surface-mounted or imbedded, as shown in Figure 31. These devices are normally used for traffic control purposes and are designed to slow or stop a vehicle by deflating their pneumatic tires. These units are available from a number of commercial manufacturers. Delta Scientific Corporation manufactures the unit shown in Figure 31. When a vehicle drives over the mechanism in the wrong direction, the spikes penetrate the tire casing, which quickly deflates the tires, making the vehicle difficult to operate for extended periods. The cost for tire shredders is approximately $1,000 for a standard roadway. These systems should not be considered vehicle barriers and are shown here only as an option for either slowing a vehicle prior to impact with a barrier or where two to three times the required standoff distance is available between the entry point and the protected structure. These systems may not be effective against modern "run flat" tires; heavy-duty, off-road truck tires; or extra-wide tires that can bridge over two or more spikes. Required standoff distances for explosive protection can be established by using the guidance in Appendix D.

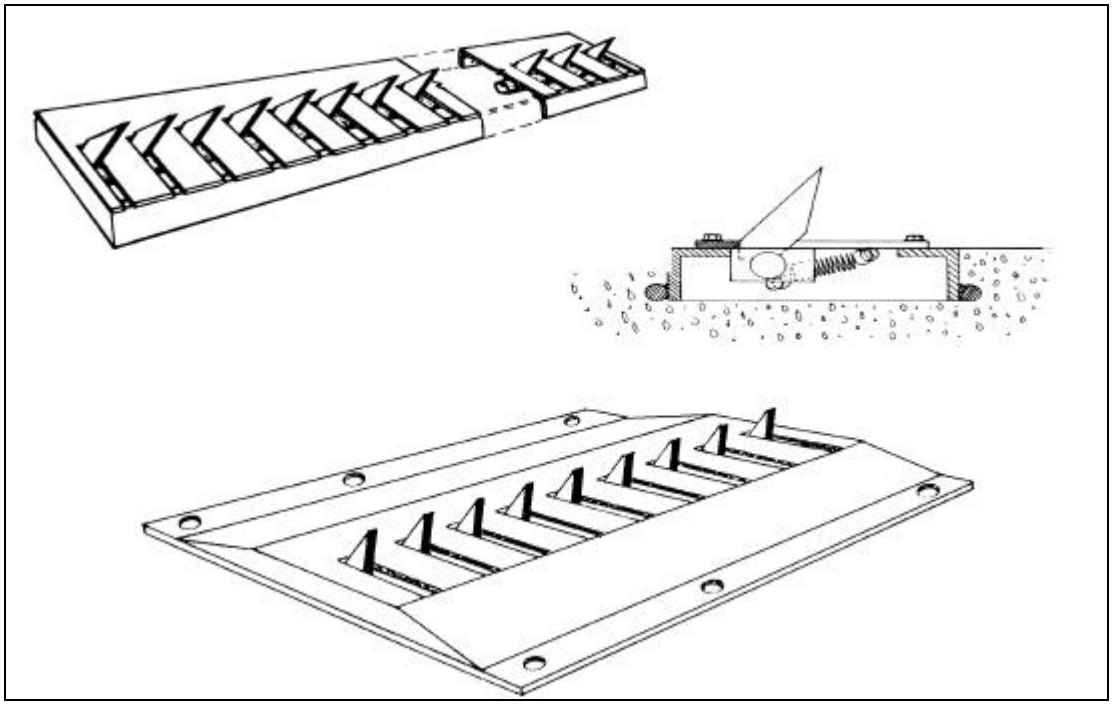

Figure 31
Tire Shredders

8.2.7.2 Testing. These systems have not been formally tested, but should work as advertised unless the tires are modified to prevent deflation.

8.2.8 King Tut Blocks

8.2.8.1 Description. Non-reinforced concrete blocks can be used effectively as vehicle barriers or to slow the speed of oncoming vehicles, as shown in Figure 32. The placement of the blocks is shown in Table 14. These blocks can be cast in place and should be anchored to the ground so that movement or removal is difficult. The cost for cast-in-place non-reinforced concrete construction is about $200 per cubic yard ($260 per cubic meter), according to "Building Construction Cost Data."

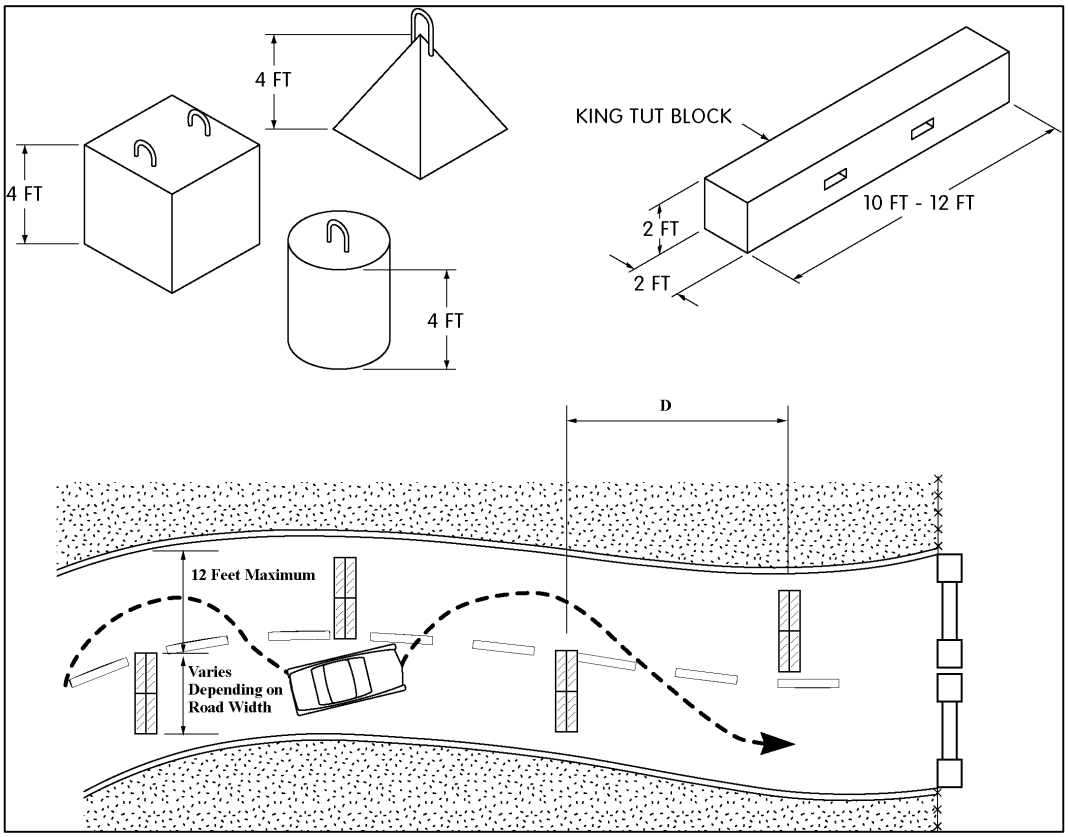


Scale: 1 foot = 0.3048 m

Figure 32
Concrete Blocks

Table 14
Separation Distance (D)* for Barriers
to Reduce Speed on a Straight Path in Feet (m)

| **Achievable Speed of Vehicle on a Curve in mph (kph)→** / **Road Width in ft (m) ↓** | **20 (32)** | **30 (48)** | **40 (64)** | **50 (80)** | **60 (97)** |
|---|---|---|---|---|---|
| **20 (6.2)** | 28 (8.5) | 43 (13.1) | 58 (17.7) | 73 (22.2) | 87 (26.5) |
| **30 (9.3)** | 40 (12.2) | 63 (19.2) | 86 (26.2) | 108 (32.9) | 130 (39.6) |
| **40 (12.4)** | 47 (14.3) | 77 (23.5) | 106 (32.3) | 134 (40.8) | 161 (49.1) |
| **50 (15.3)** | 51 (15.5) | 87 (26.5) | 122 (37.2) | 155 (47.2) | 187 (57.0) |
| **60 (18.3)** | 54 (16.5) | 96 (29.2) | 135 (41.1) | 172 (52.4) | 209 (63.7) |

*Based on f=1.0

8.2.8.2 Testing. No formal crash testing has been conducted; however, the mass of this type of concrete construction should perform at least as well as a concrete median (Figure 26).

8.2.9 Steel Cable Barriers

8.2.9.1 Description. As shown in Figure 33, there are several configurations for steel cable barriers. Site requirements, configuration, and environment must be carefully considered prior to selecting a cable system for a particular application.

8.2.9.2 Testing. Systems such as those shown in Figure 33 have not been formally tested. However, two 3/4-inch (1.9-cm) diameter cables attached to a 200-foot section of fence, minus fabric, with deadman anchors at both ends were tested with a 4,000-pound (1,818-kg) vehicle at 52 mph (84 kph). The vehicle was stopped within 13 feet (4 m) and then pushed back to the impact point.

8.2.10 Steel Cable-Reinforced Chain Link Fencing

8.2.10.1 Description. Without some reinforcement, a standard chain-link fence can be penetrated easily by a light vehicle with little or no damage. The designs shown in Figures 34 through 40 provide a cost-effective method for reinforcing standard chain link fences against the threat of penetration by light vehicles. For additional considerations, information, and design guidance relating to the reinforcing of fencing and gates, refer to MIL-HDBK 1013/10.

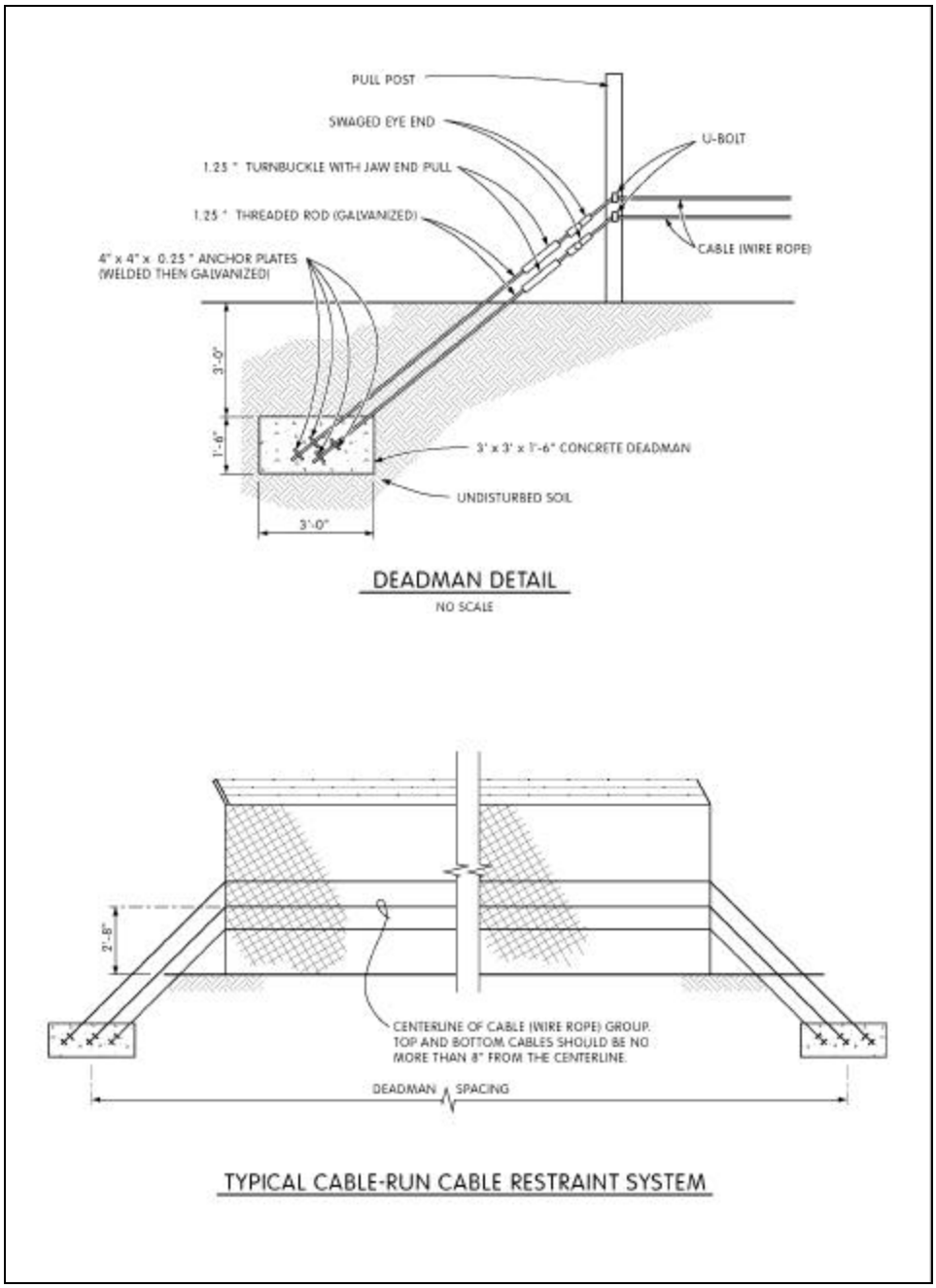


Scale: 1 foot = 0.3048 m
1 inch = 2.54 cm

Figure 33
Steel Cable Barriers

8.2.10.2 Testing. Sandia National Laboratories tested a barrier, consisting of a chain link fence reinforced with a 3/4-inch (1.9-cm) cable. In this test, a 3,350-pound (1,523-kg) vehicle, traveling at 23.5 mph (38 kph), penetrated the barrier 7 feet (2.1 m). A 4,050-pound (1,841-kg) vehicle, traveling at 50.6 mph (82 kph), penetrated 26 feet (7.9 m). Engineering analysis of various cable restraint configurations, using the BIRM computer model (PDC-TR90-2), is shown in Table 15.

Table 15
Performance of Cable Restraint Systems Based on Engineering Analysis

| **Cable Barrier w/200-foot Anchorage Spacing** | **Kinetic Energy in ft-lbf x 1,000 (kgf-m)** | **Penetration in Feet (m)** |
|---|---|---|
| | | |
| 1 Cable @ 3/4-inch dia. | 100 (13.8) | 40 (12.2) |
| 2 Cables @ 3/4-inch dia. | 200 (27.6) | 40 (12.2) |
| 3 Cables @ 3/4-inch dia. | 338 (46.7) | 40 (12.2) |
| 4 Cables @ 3/4-inch dia. | 418 (57.8) | 40 (12.2) |
| 1 Cable @ 1-inch dia. | 150 (20.7) | 40 (12.2) |
| 2 Cables @ 1-inch dia. | 340 (47.0) | 40 (12.2) |
| 3 Cables @ 1-inch dia. | 506 (70.0) | 40 (12.2) |
| 4 Cables @ 1-inch dia. | 706 (97.6) | 40 (12.2) |

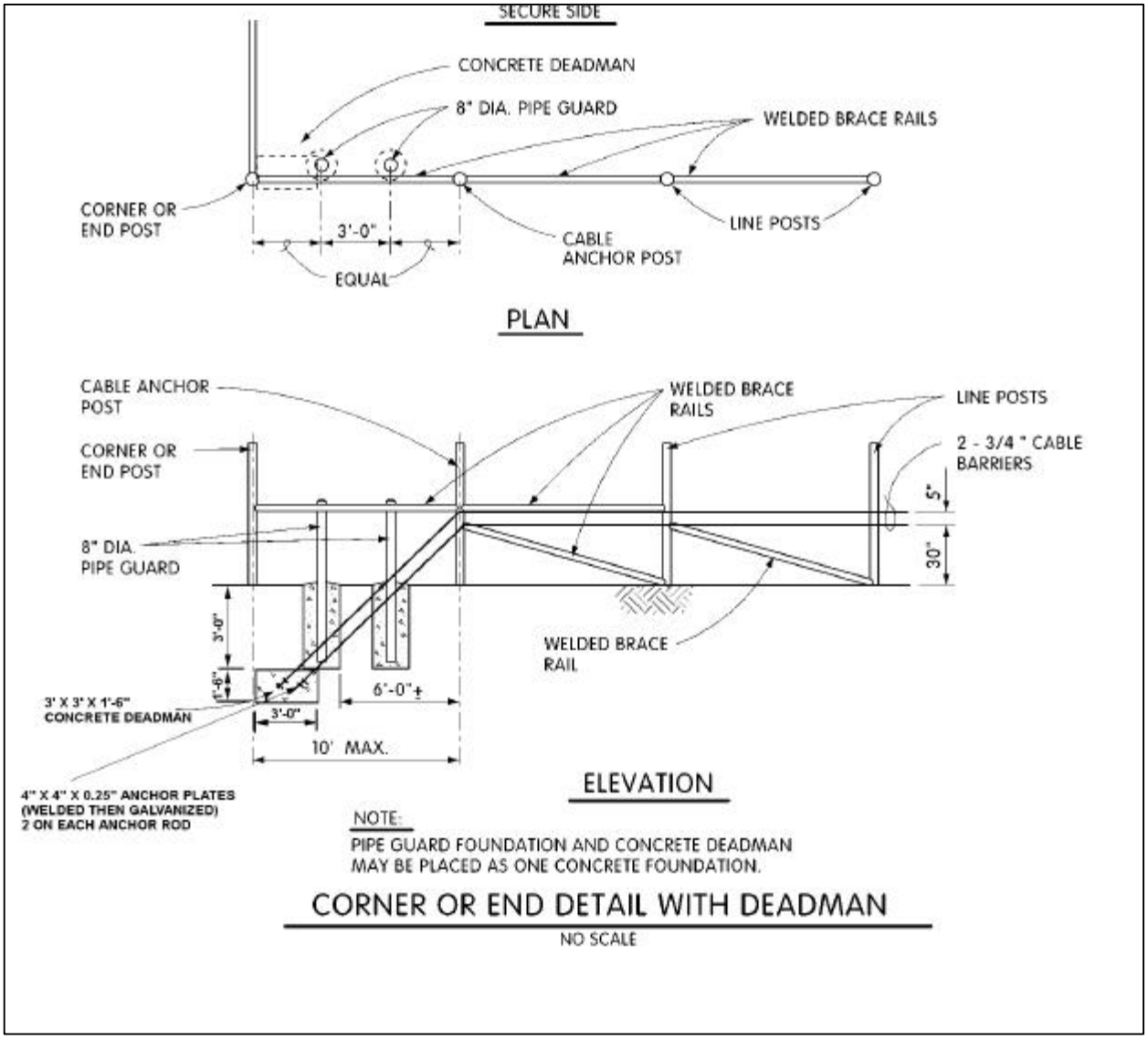


Scale: 1 foot = 0.3048 m
1 inch = 2.54 cm

Figure 34
Cable-Reinforced Fence Details

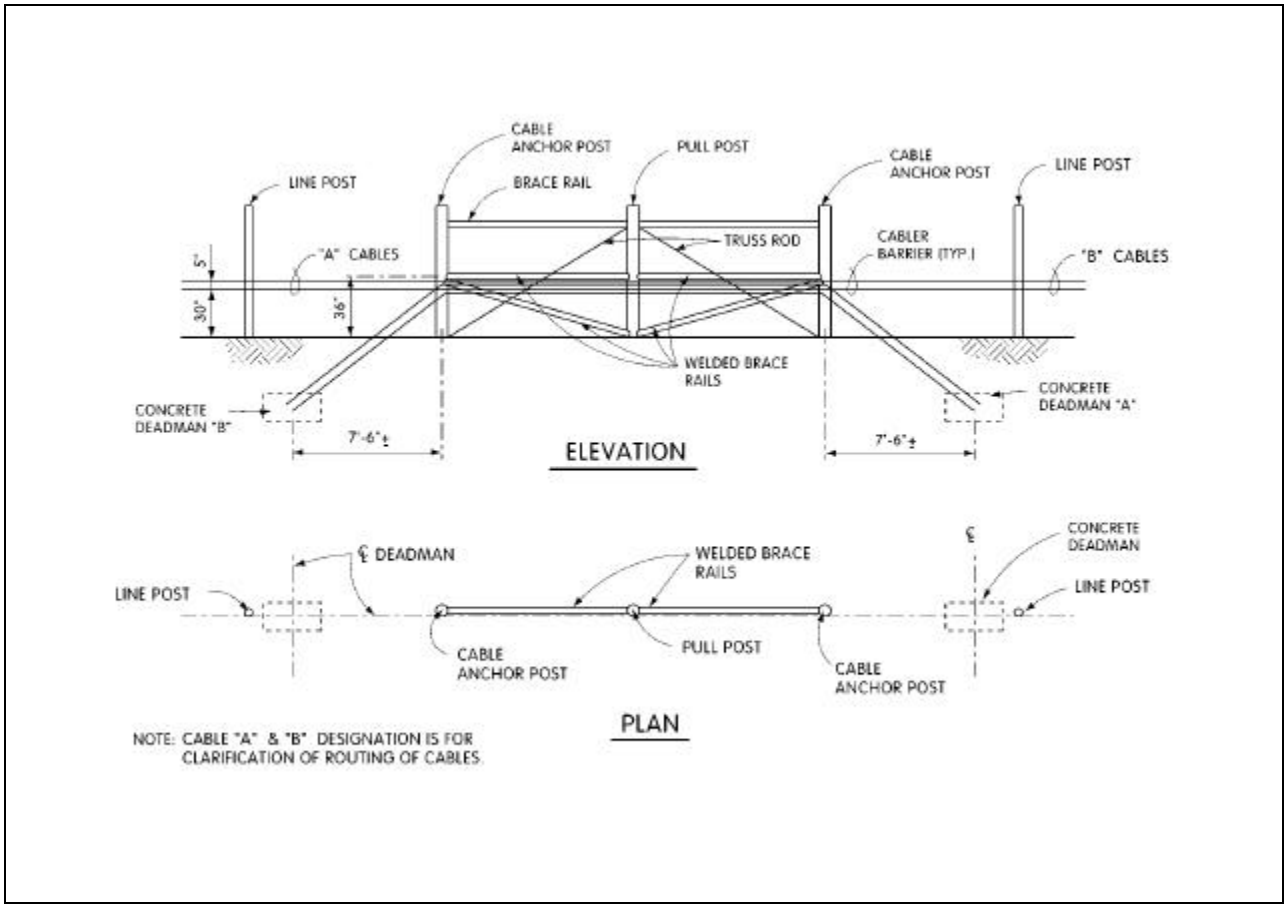


Scale: 1 foot = 0.3048 m
1 inch = 2.54 cm

Figure 35
Cable-Reinforced Fence Details (Continued)

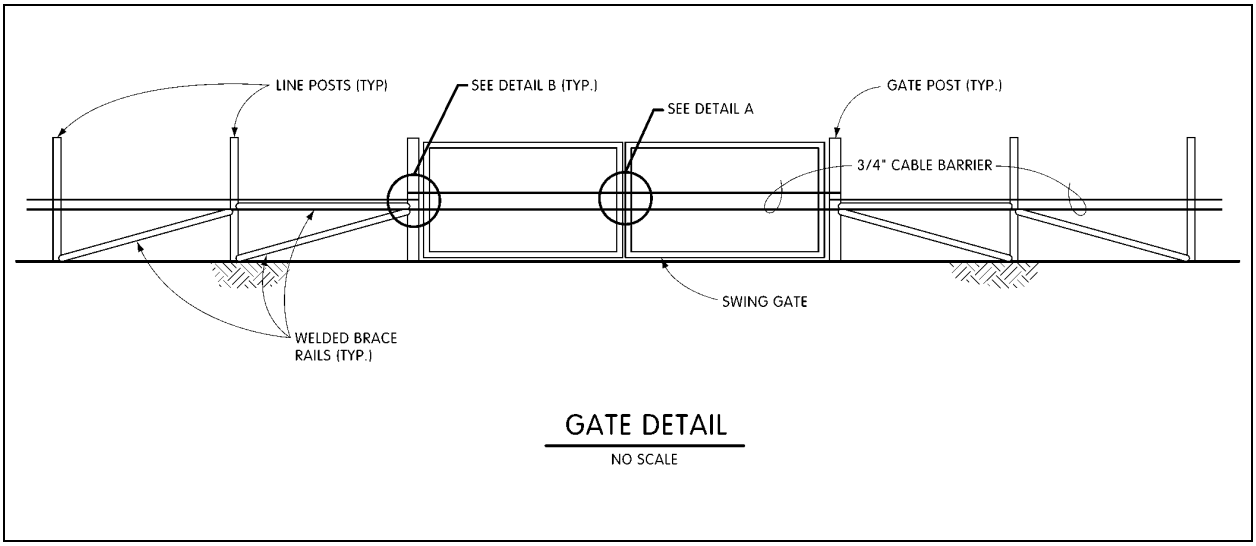


Scale: 1 inch = 2.54 cm

Figure 36
Gate Detail

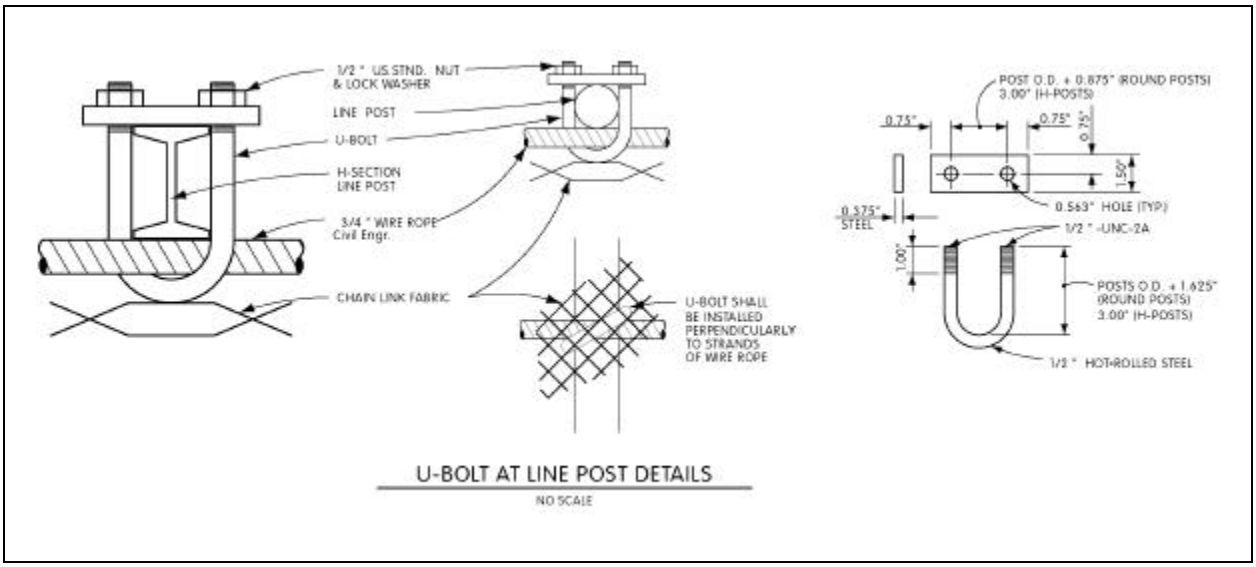


Scale: 1 inch = 2.54 cm

Figure 37
U-Bolt at Linepost Detail

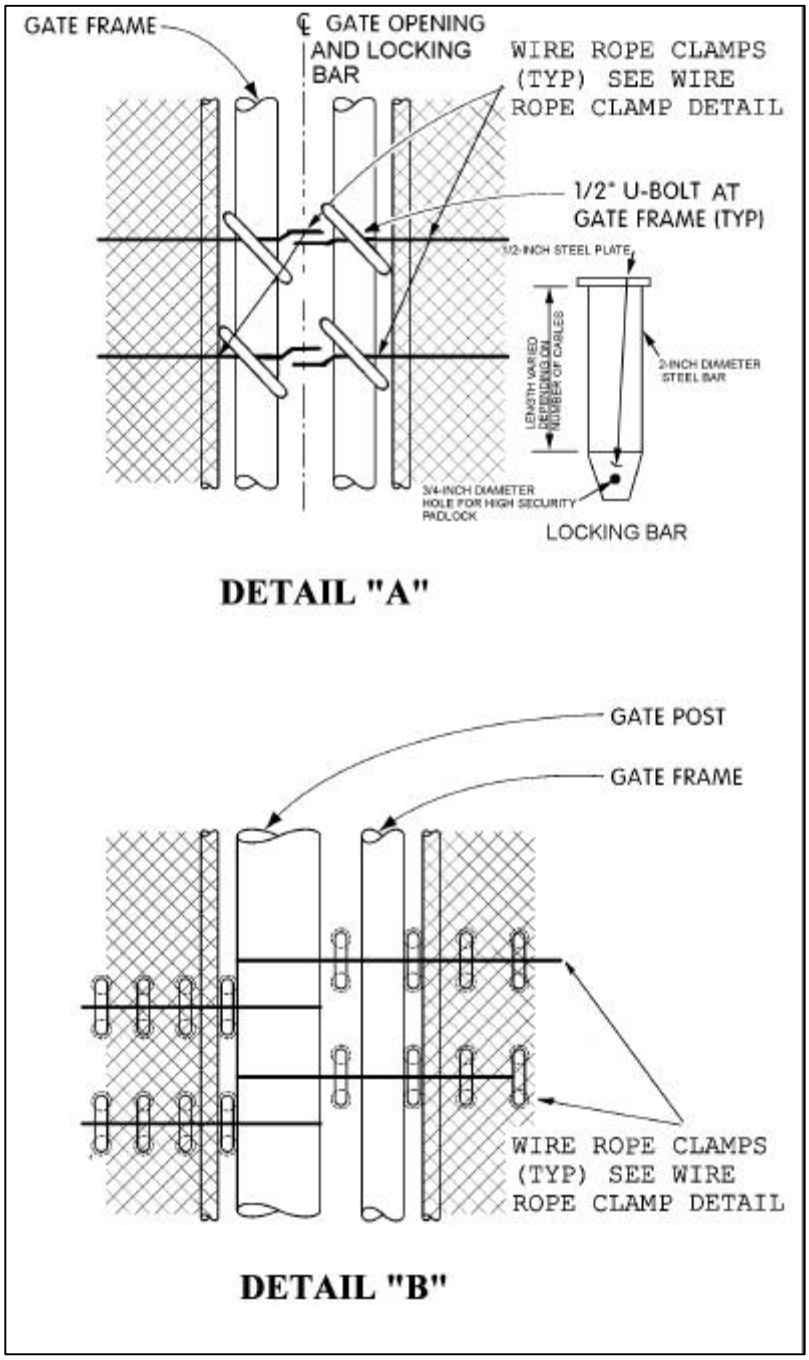


Scale: 1 inch = 2.54 cm

Figure 38
Gate Opening Detail

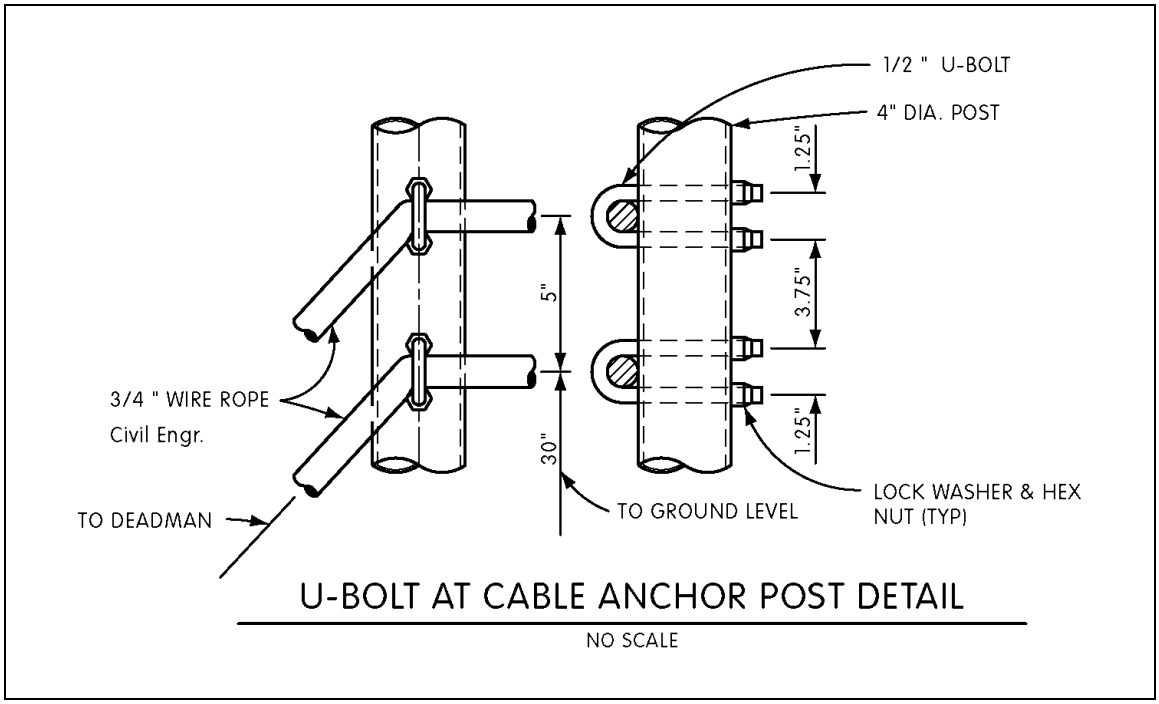


Scale: 1 inch = 2.54 cm

Figure 39
U-Bolt at Cable Anchor Post Detail

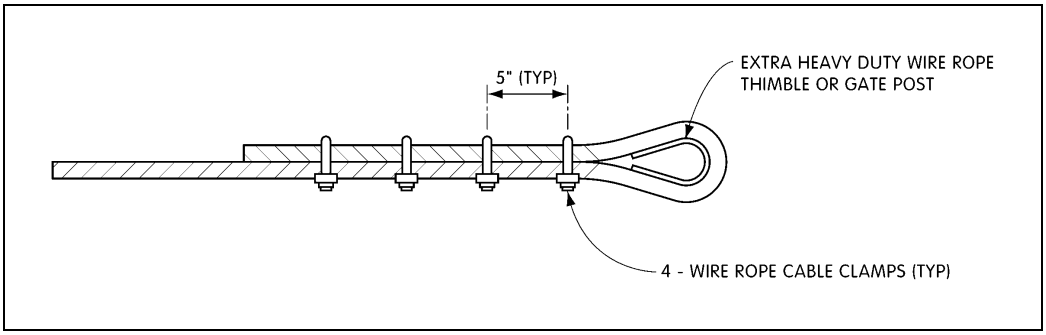


Scale: 1 inch = 2.54 cm

Figure 40
Wire Rope Clamp Detail

8.2.11 Reinforced Concrete Inverted "T" Walls

8.2.11.1 Description. An inverted "T" barrier is a wall resting on a footing. The entire footing and part of the wall are imbedded in the existing soil or in a crushed stone mix. Figure 41 shows a representative cross section of these barriers.

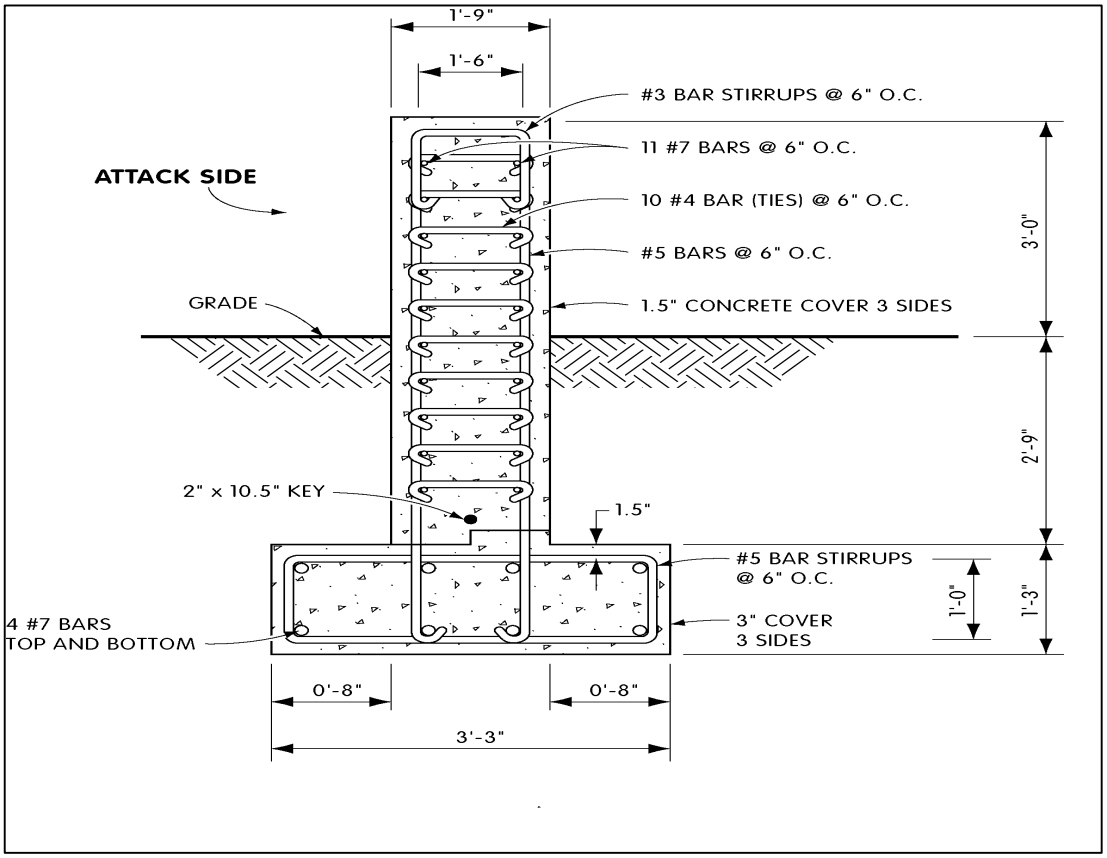


Scale: 1 foot = 0.3048 m
1 inch = 2.54 cm

Figure 41
Reinforced Concrete Inverted "T"

8.2.11.2 Testing. Reinforced concrete inverted "T's" have been formally tested. Lighter versions of this cross section, 6 inches (15 cm) thick, were tested with a 3,000-pound (1,364-kg) vehicle traveling at 39.6-mph (64 kph). There was no penetration of the barrier by the vehicle. A configuration similar to Figure 41 was tested with a 15,000-pound (6,818-kg) vehicle traveling at 30 mph (48 kph). The wall effectively stopped the attack vehicle.

8.2.12 Plastic Barrier Systems

8.2.12.1 Description. Plastic barrier systems (Figure 42) are available from the two manufacturers listed in Appendix A. They are molded in a configuration similar to the Jersey Bounce or Barrier, shown in Figure 26. These barriers weigh approximately 130 pounds empty and 1,600 to 1,800 pounds when filled with water. The units are made from polyethylene plastic and come in six-foot sections that are easily transported. An interlocking section and steel pipe are used to link the sections together. Linking the sections is strongly recommended to provide added resistance to vehicle impact and reduce lateral movement. Surface mounting of these units limits their use as an effective vehicle barrier, except for low-speed impacts (less than 15 mph) and angles less than 25 degrees. The cost is approximately $300 each.

8.2.12.2 Testing. These units have not been formally crash-tested.

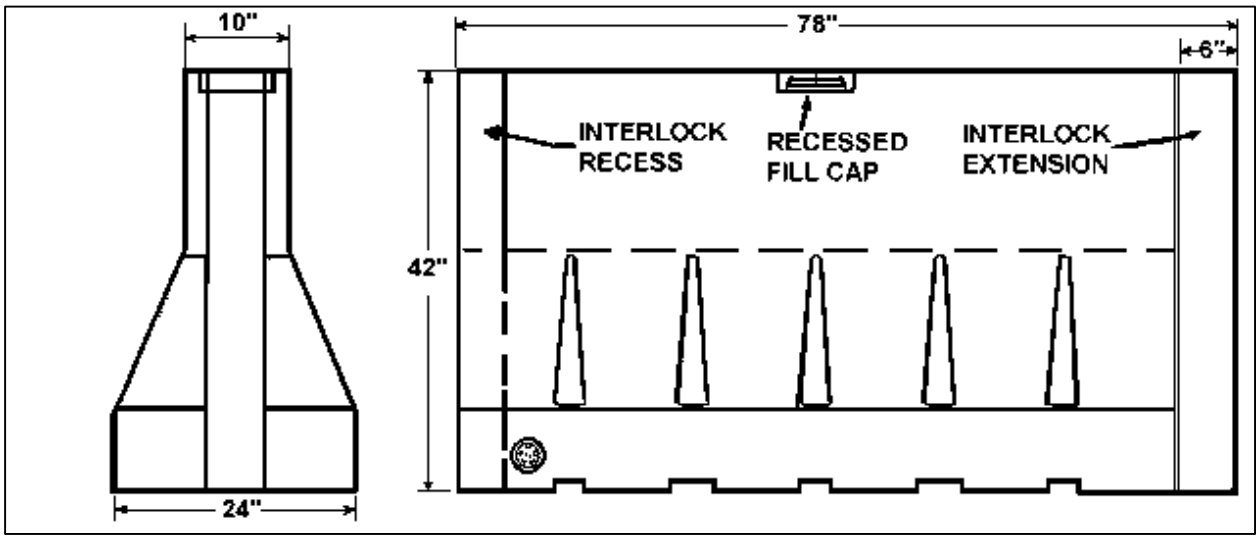


Scale: 1 foot = 0.3048 m
1 inch = 2.54 cm

Figure 42
Commercially Available Plastic Barrier System

8.2.13 Expedient Barrier Systems. Common construction items, such as large diameter concrete and steel pipes, and large construction vehicles (i.e., dump trucks and earth moving equipment) that have heavy mass and size can be used, or modified for use, as expedient barrier systems. Some examples are:

a) Three-foot (0.9-m) sections of large-diameter, corrugated metal or reinforced concrete pipe can be placed on end and filled with sand or earth.

b) Steel pipe can be stacked and welded together in a pyramid.

c) Construction vehicles can be anchored together with cable or chain.

These expedient measures can provide effective protection against vehicle bomb attacks. Because no testing has been done on these systems, it is important that, if used, these barriers be stabilized and anchored to prevent displacement by a threat vehicle.

8.3 Vehicle Barrier Performance. Full-scale testing of vehicle barrier systems is only one way to obtain information on the performance capabilities of vehicle barriers. Testing provides evidence that the selected barrier will effectively absorb the impact of a threat vehicle. Tests may be conducted by independent testing laboratories, government agencies, or the manufacturer. Some tests are properly documented and/or witnessed by authorities, while others are not. Only tests by independent testing laboratories or government agencies should be accepted.

It is important to correctly interpret the test results. For example, full penetration could mean the vehicle passed through a barrier and was still capable of movement after penetration. Or, it could mean the vehicle payload penetrated through a barricade, but the vehicle was incapacitated. Whenever possible, carefully review the actual test report before selecting a barrier system. For commercially available active barriers, these reports are usually available from the manufacturer. Such review may not always be possible. In this situation, it may be necessary to make judgments based on experience.

Selection of vehicle barriers can also be based on engineering analysis. Finite element analysis and computer models specifically designed to analyze barrier impact, such as the BIRM computer model (PDC-TR90-2), have been successfully used and correlated to actual test results. Using this method is much more cost-effective than full-scale testing. Before accepting the results of an engineering analysis from a manufacturer, have the calculations carefully checked by a qualified structural engineer.

For the most current information available on vehicle barriers, contact NFESC, Security Engineering Division, Code ESC66, 1100 23rd Avenue, Port Hueneme, California, 93043-4328, or call DSN 551-1581, or commercial (805) 982-1581.

# Section 9: NOTES

9.1 Intended Use. The purpose of this handbook is to provide information about the use of vehicle barriers as a method of protecting critical DOD personnel and assets from an attack by explosive-laden vehicles.

9.2 Subject Term (Key Word) Listing

Barricades
Barrier systems, active
Barrier systems, passive
Blast damage
Blast injury
Blast wave
Bollard
Crash beam
Crash gate
Explosive-laden vehicles
Explosives
Guardrails
Reliability, Availability, and Maintainability (RAM)
Security
Standoff distance
Structural hardening
Terrorist attack
Vehicle barriers

# APPENDIX A
# LIST OF MANUFACTURERS

## A.1 Scope

A.1.1 Scope. This appendix lists manufacturers of active and passive vehicle barriers. The information contained herein is intended for guidance only.

## A.2 Applicable Documents

This section is not applicable to this appendix.

## A.3 Definitions

The definitions in Section 3 of this handbook apply to this appendix.

## A.4 Manufacturers of Active Barriers

The manufacturers listed in this appendix are included only to illustrate a piece of equipment or style of vehicle barrier. It is not intended to be a recommendation or an endorsement of any product or company. This is only a partial list of manufacturers.

B&B Electromatic
14113 Main Street
Norwood, LA
Office: (800) 367-0387
FAX: (504) 629-5727

Crisp and Associates*
272 Airport Road
Oliver Springs, TN 37840
Office: (423) 435-6602

Delta Scientific Corporation*
24901 West Avenue Stanford
Valencia, CA 91355
Office: (805) 257-1800
FAX: (805) 257-0617
GSA Schedule No: GS07F9982H, expires April 30, 2003

* Manufacturers of Department of State certified barriers

APPENDIX A (Continued)

Mandell Armor Design and Mfg., Inc.
901 Madison St.
Phoenix, AZ 85034
Office: (602) 253-6810
FAX: (602) 253-8644

Nasatka Barrier, Inc.*
8405 Dangerfield Place
Clinton, MD 20735
Office: (301) 868-0300
FAX: (301) 868-0524
GSA Schedule No: GS07F9776H, expires Nov 30, 2002

OMNISEC Security Systems, Inc.*
8000 Westpark Drive, Suite 200
Barrier Division
McLean, VA 22102
Office: (703) 318-8226
FAX: (703) 318-9341

The Tymetal Corporation
1626 Route 9
Clifton Park, NY 12065
Office: (800) 328-4283 or (518) 383-6084
FAX: (518) 383-6301

* Manufacturers of Department of State certified barriers

A.5 Manufacturers of Passive Barriers

Guardian
77 East Market Street
Wilkes-Barre, PA 18701-3116
Office: (717) 824-0799
FAX: (717) 824-0899

Rose Enterprises, Inc.
One Greentree Centre, Suite 201
Marlton, New Jersey 08053
Office: (609) 988-5454

# APPENDIX B
# EXAMPLES FOR PROTECTION AGAINST TERRORIST VEHICLE BOMBS

## B.1 Scope

B.1.1 Scope. This appendix contains examples for determining the design of vehicle barrier systems. The information contained herein is intended for guidance only.

## B.2 Applicable Documents

### B.2.1 Non-Government Publications

Means, R.S., "Building Construction Cost Data," 55th Edition, 1997.

## B.3 Definitions

The definitions in Section 3 of this handbook apply to this appendix.

## B.4 Examples

B.4.1 Example 1. Building 827 must be protected against a terrorist vehicle bomb. The structure is a single-story, reinforced-concrete building. The following factors apply:

a) The tolerable level of damage to the building is minimal.

b) Some injury from debris is anticipated, but serious injury or death must be avoided, if possible.

c) The design threat has been established as a vehicle with a gross weight of 15,000 pounds (6,818 kg), including 1,000 pounds (454 kg) of explosives traveling at 50 mph (80 kph). This combination of vehicle size and speed will develop 1,253 ft-lbf (173 kgf-m) of energy on impact.

Referring to Figure B-1, the line of approach is a perimeter road on the north and west sides of the building. Perimeter static barriers and a movable barrier on the west entrance to the facility will be required. A candidate active vehicle barrier system might be the Delta TT207, described in Table 5 of Section 8. For the perimeter fence, a candidate passive barrier could be the bollard system, shown in Figure 25 of Section 8.

APPENDIX B (Continued)

Using Table D-8 in Appendix D, the required standoff distance for a minimal level of damage to the building from 1,000 pounds (454 kg) of explosives is 400 feet (122 m). Using Table D-5 in Appendix D, standoff distance for some injury from debris, but low probability of death, is 300 feet (91 m). The controlling distance is 400 feet (122 m). Because there is only about 320 feet (97 m) available for standoff at the location closest to the perimeter (at Building 700), a decision must be made to either close perimeter road “B” to vehicle traffic or accept “minor” (280 feet or 85 m) damage to the structure. In this case, because the death and injury goal will be met, acceptance of minor, rather than minimal, damage to the structure could be an acceptable alternative. Standard glazing systems, on the other hand, will fail under these loading conditions and should be treated with fragment-retention film or replaced with blast-resistant glazing systems to reduce potential injury to personnel.

Based on the performance characteristics of the Delta TT207, the penetration distance of the design threat vehicle, after impact, is 27 feet (8 m). Adding this distance to the distance required for mitigating the explosive effects, the total standoff distance between the barrier and the building should be at least 427 feet (130 m). Because this standoff distance is not available for Building 827 under current site conditions, the next step would be facility hardening or the acceptance of minor damage to the structure.

Passive barriers along the fence line should be designed to allow little or no penetration, because available standoff distance is already at the marginal level to protect personnel against death and injury. Selection of the concrete-filled bollard system (Figure 25) will provide adequate penetration resistance, because the approach is parallel to the barrier (77% of the impact load from Table 1 in Section 6).

APPENDIX B (Continued)

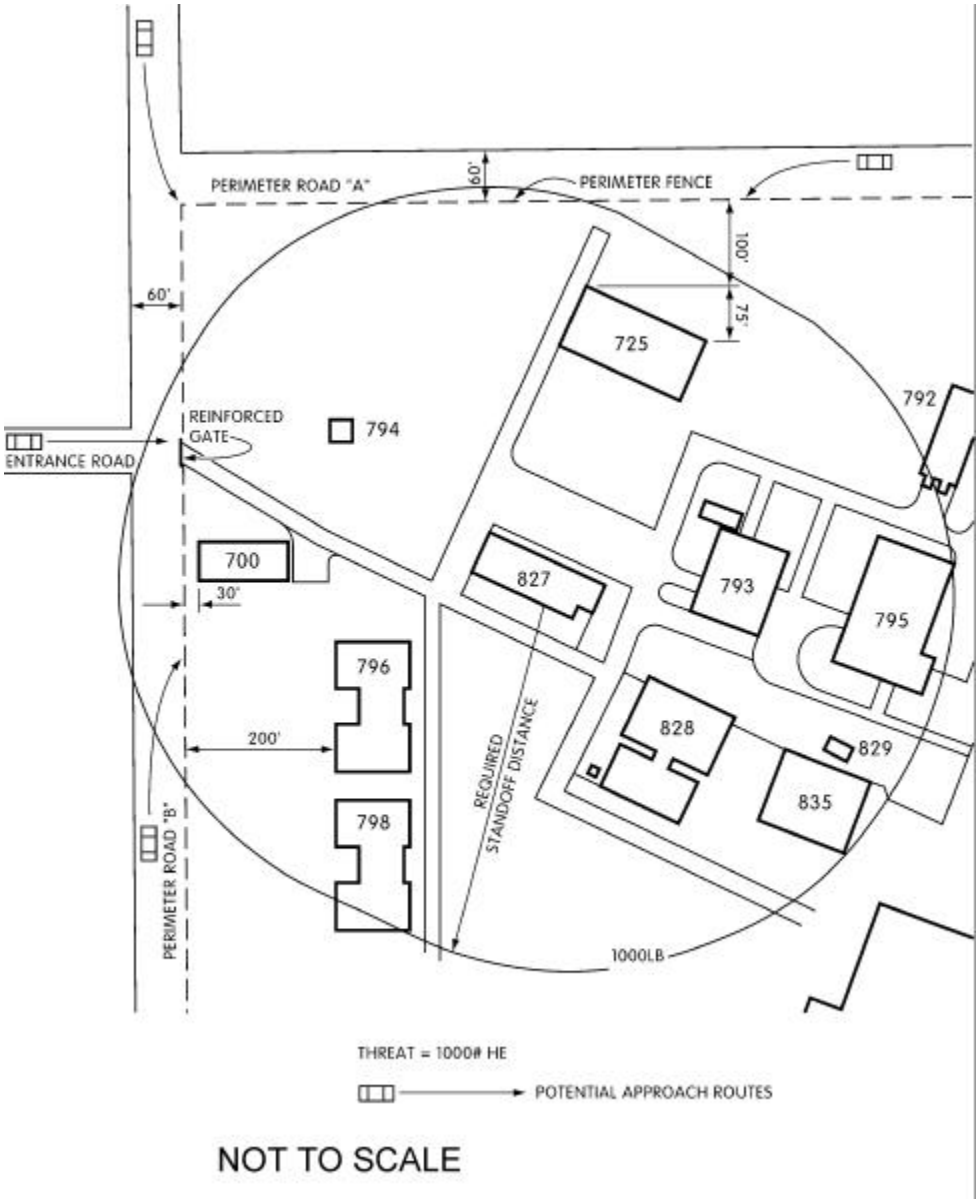


Scale: 1 foot = 0.3048 m
1 pound = 0.453 kg

**NORTH**

Figure B-1
Site Plan for Examples

APPENDIX B (Continued)

B.4.2 Example 2. Referring to Figure B-1, the target buildings in this case are 796 and 798. Perimeter Road "B" has a 60-foot (18-m) offset (distance from the barrier to the restricting opposite curb). Using Table 1 in Section 6, a vehicle traveling at 50 mph (80 kph) can safely turn on a maximum 167-foot (51 m) radius curve without skidding. At this speed and angle of approach to the barrier, the vehicle will strike the barrier at an angle. Because the amount of speed directed at the barrier is related to the angle of impact (Table 1), the speed directed at the barrier is 76.6 percent of the 50-mph (80-kph) speed, or 38 mph (61 m). Using Table 2 in Section 6 and rounding up to the next highest speed [40 mph (64 kph)], the kinetic energy transferred to the barrier will be 214,000 ft-lbf (29 kgf-m), if the threat is a 4,000-pound (1,818-kg) vehicle, and 802,000 ft-lbf (111 kgf-m), if the threat is a 15,000-pound (6,818-kg) vehicle.

Once the kinetic energy has been calculated, refer to Appendix E for a listing of passive barriers and penetration distances that can be used to select the most effective barrier. Anchored Jersey Barriers could be used for the low-level threat of a 4,000-pound (1,818-kg) vehicle, and a bollard system or concrete planter would be the only passive barriers that would be capable of stopping a 15,000-pound (6,818-kg) vehicle. For the larger threat, it would be appropriate to install concrete blocks, as shown in Figure 32 in Section 8, and space them in accordance with the information from Table 14 to reduce the vehicle speed to 30 mph (48 kph) or less.

# APPENDIX C
# COST DATA FOR ACTIVE AND PASSIVE VEHICLE BARRIERS

## C.1 Scope

C.1.1 Scope. This appendix presents rating and cost data for commercial vehicle barriers, and cost data for passive barriers. The information contained herein is intended for guidance only.

## C.2 Applicable Documents

### C.2.1 Non-Government Publications

Means, R.S., "Building Construction Cost Data," 55th Edition, 1997.

## C.3 Definitions

The definitions in Section 3 of this handbook apply to this appendix.

## C.4 Active Barriers

C.4.1 DOS Ratings for Active Barriers. The commercial active barriers, shown in Table C-1, have been formally tested and certified by DOS. The ratings are explained in Table C-2.

APPENDIX C (Continued)

Table C-1
DOS-Certified Active Barriers

| Manufacturer | Ref. # | Model | DOS Ratings* |
|---|---|---|---|
| Crisp and Associates | 1 | VSB 80187 P10 | K12/L1 |
| 272 Airport Road | 2 | VSB 80187-F10 | K12/L3 |
| Oliver Springs, TN 37840 | | | |
| Office/FAX: (423) 435-6602 | | | |
| Delta Scientific Corporation | 3 | TT207(S) | K12/L3 |
| 24901 West Avenue Stanford | 4 | TT210 | K4/L2 |
| Valencia, CA 91355 | 5 | TT280 | K12/L2 and K8/L3 |
| Office: (805) 257-1800 | 6 | TT207FM | K12/L3 |
| FAX: (805) 257-0617 | | | |
| Nasatka Barrier, Inc. | 7 | NMSB II | K12/L3 |
| 8405 Dangerfield Place | 8 | NMSB IIIb | K12/L3 |
| Clinton, MD 20735 | 9 | NMSB IV | K12/L3 |
| Office: (301) 868-0300 | | | |
| FAX: (301) 868-0524 | | | |
| OMNISEC Security Systems, Inc. | 10 | Magnum | K12/L3 |
| 8000 Westpark Drive, Suite 200 | 11 | Mini-Magnum | K8/L3 |
| McLean, VA 22102 | 12 | Portapungi | K8/L1 |
| Office: (703) 318-8226 | 13 | Defender | K4/L2 |
| FAX: (703) 318-9341 | 14 | Stinger | K12/L3 |
| | | | |

* See Table C-2 for explanation of ratings.

APPENDIX C (Continued)

Table C-2
DOS Ratings*

| DOS Rating | Speed of Vehicle At Impact in mph (kph) | Kinetic Energy | Max. Allowable Penetration of Vehicle |
|---|---|---|---|
| K12 | 50 mph (81 kph) | 1,250,000 ft-lbf (178,812 kgf-m) | |
| K8 | 40 mph (64 kph) | 800,000 ft-lbf (110,600 kgf-m) | |
| K4 | 30 mph (48 kph) | 450,000 ft-lbf (62,212 kgf-m) | |
| L3 | | | 3 feet (0.91 m) |
| L2 | | | 3 to 20 feet (0.91 to 6.1 m) |
| L1 | | | 20 to 50 feet (6.1 to 15.2 m) |

* Based on 15,000-lb (6,818-kg) vehicle weight

C.4.2 Cost Data for Active Barriers. Table C-3 contains cost data for active vehicle barriers certified by DOS.

Table C-3
Manufacturer's Data and Cost for Certified Active Barriers

| **Barrier System Ref #** | 1 | 2 | 3 | 4 | 5 | 6 | 7 | 8 | 9 | 10 | 11 | 12 | 13 | 14 |
|---|---|---|---|---|---|---|---|---|---|---|---|---|---|---|
| **Characteristics** | | | | | | | | | | | | | | |
| Barrier Type | | | | | | | | | | | | | | |
| Active | X | X | X | X | X | X | X | X | X | X | X | X | X | X |
| Fixed | | X | X | X | X | X | X | X | X | X | X | X | | X |
| Portable | X | | | | | | | | | | | | | |
| Barricade | X | X | X | | | | X | X | X | X | | X | | X |
| Bollard | | | | X | | | | | | | | | X | |
| Gate | | | | | X | | | | | | | | | |
| Equipment Cost* ($ x one thousand) | ** | ** | 30 | 10 for 1 | 27 | 30 | 13 | 24 | 18 | 20 to 40 | 9 | 20 to 35 | 15 to 20 | 20 to 40 |
| Installation Cost (% of Equipment Cost) | ** | ** | 30 | 45 | 30 | 35 | 60 | 35 | 60 | 75 | 75 | 65 | 75 | 70 |

* 1997 cost figures from manufacturers
** Contact manufacturer for pricing information

APPENDIX C (Continued)

C.5 Passive Barriers

C.5.1 Cost Data for Passive Barriers. Table C-4 is a summary of cost data for selected passive vehicle barriers.

Table C-4
Cost for Passive Barriers

| Barrier | Cost/Unit** |
|---|---|
| Anchored concrete Jersey barrier, non-reinforced | $40.00/ft ($131.24/m) |
| Buried tires, 36-ply, 8-ft (2.4-m) diameter, weighing 2,000 lb (909 kg) each | $25.00/tire |
| Eight-inch (20.3-cm) diameter bollard system @ 3 feet (0.9 m) on center with 12-inch (30.5-cm) channel rail | $600/each |
| Standard chain link fence [7 ft (2.1 m), 9 ga w/ outrigger] and one 3/4-inch (1.9-cm) diameter cable | $27.00/ft ($88.58/m) (including fence) |
| Eight-inch (20.3-cm) diameter concrete-filled pipe | $520.00/each |
| Concrete planter barrier | $80.00/ft ($262.48/m) |
| Cable barrier [200-ft (60.9-m) anchorage spacing]* | |
| One cable @ 3/4-inch (1.9-cm) dia. | $7.00/ft ($22.97/m) |
| Two cables @ 3/4-inch (1.9-cm) dia. | $8.50/ft ($27.88/m) |
| Three cables @ 3/4-inch (1.9-cm) dia. | $11.00/ft ($36.08/m) |
| Four cables @ 3/4-inch (1.9-cm) dia. | $14.00/ft ($45.92/m) |
| One cable @ 1-inch (2.5-cm) dia. | $8.00/ft ($26.24/m) |
| Two cables @ 1-inch (2.5-cm) dia. | $10.00/ft ($32.80/m) |
| Three cables @ 1-inch (2.5-cm) dia. | $12.50/ft ($41.00/m) |
| Four cables @ 1-inch (2.5-cm) dia. | $15.00/ft ($49.20/m) |
| Reinforced concrete retaining wall<br>6 inches (15.2 cm) thick<br>21 inches (53.3 cm) thick | <br>$120.00/ft ($393.72/m)<br>$390.00/ft ($1,279.59/m) |
| Cable barrier – two 3/4-inch (1.9-cm) | $8.50/ft ($27.88/m) |

* Based on analytical modeling
** Based on "Building Construction Cost Data." Average cost for continental United States

# APPENDIX D
# ESTABLISHING STANDOFF DISTANCE

D.1 General. This section provides guidance and data on establishing standoff distances for a facility susceptible to a terrorist vehicle bomb attack. It is based on the design and testing of structures to resist the effects of explosions. Standoff distances can be established, based on land value and availability or on the building construction information contained in this section. There may be tradeoffs between these factors, based on the cost of land versus the cost of building hardening. Hardening costs for the structure will increase with decreasing standoff distance. Also, the cost of the perimeter vehicle barrier system must be included in the cost analysis, because the barrier system cost will increase as the perimeter is expanded to provide greater standoff distances.

D.2 Building Performance Levels. The initial phase in designing structures to resist the effects of vehicle bombs is to develop the design criteria that describes what will happen when a bomb detonates near the structure. To develop design criteria for the performance of a structure under some threat, it is important to define:

a) Performance goals that establish how the structure should perform under the expected blast load.

b) Expected range of threat that will establish the blast loading conditions on the structure.

c) Amount of damage allowed that will ensure that performance goals are met.

The performance goals establish a common basis of communication between the user and design engineer. The various levels of performance that allow an increasing level of building functionality after an attack are defined below.

For all performance levels, the application of FRF to existing glazing, or replacement of existing glazing systems with glazing cross-sections that will withstand the applied loads, is recommended to reduce injury levels to personnel occupying these structures.

D.2.1 Possible Collapse. This level refers to buildings designed for no protection against an explosive threat. Standard construction will be completely destroyed at this performance level.

D.2.2 Non-Repairable. This level refers to buildings designed and sited for minimal protection against an explosive threat. The building will be heavily damaged, but will not undergo “progressive collapse.” If a building collapses under structural loading, it dramatically increases the possibility that lives will be lost. This level of design allows for full disruption of the building and a high probability that the building will not be repairable. All standard window

systems will be completely destroyed. Death of personnel should be minimized, but injury level will be high. The use of Fragment-Retention Film (FRF) is not effective at this level. The use of blast-resistant glazing could increase damage levels to the structure.

D.2.3 Extended Disruption, Repairable. In this level, buildings are designed and sited for moderate protection against an explosive threat. The building will be damaged, but damage will be controlled and limited. The building will be out of service for an extended time (i.e., months or years), but will probably be repairable. Death and injury of personnel should be minimal at this level. All glazing systems will fail, but the use of FRF will limit injury by retaining glass fragments. Some frame failure will also occur. Blast-resistant glazing could be used, depending on the structural design and explosive-loading conditions.

D.2.4 Repairable. This level refers to buildings designed and sited for high-level protection against an explosive threat. The building will be damaged, but damage will be more controlled and limited, so the building will be repairable in a matter of weeks or a few months. Most of the glazing systems will fail, but will remain anchored to the frame and wall. Blast-resistant glazing could be used, depending on the structural design and explosive-loading conditions.

D.2.5 Quickly Repairable. These buildings are designed and sited for a very high level of protection against an explosive threat. Damage will be very limited. Most functions will be restored in a brief time, and the building will be fully operational in a matter of weeks. Some glazing systems will still fail, mostly on the blast side, but will remain anchored to the wall and frame and will resist the effects of the design basis threat.

D.2.6 Essentially Operable. In this level, buildings are designed and sited for maximum protection against an explosive threat. The damage will be superficial. All functions will remain operable without significant interruption. Windows and frames are designed to withstand the applied pressures without failure. Allowing the glazing to fracture, while being retained in the frame, is a cost-effective alternative at this level.

D.3 Range of Threats. Based on the desired performance goals and threat, a structural engineer can define a set of response limits for the structure. Designing for operable/repairable construction can be very costly. Construction required to protect against a large explosive threat at close range would normally take the form of fully blast-hardened, bunker-type construction.

For the above performance levels, there may be a range of possible threats. These are defined below.

D.3.1 Maximum Event. This is the largest explosive threat, expressed as net equivalent TNT charge at a specified standoff distance.

D.3.2 Controlling Event. This refers to an explosive threat source, expressed as net equivalent TNT charge that produces the most damage to the target. The controlling event may not be the maximum event. It is a function of explosive size, standoff distance, and location that produces the most damage to the structure.

D.3.3 Design Events. This is a combination of explosive threats, expressed as net equivalent TNT charge at a separation distance, that comprise a range of possible attack scenarios. This includes a variety of events of different sizes and locations.

D.3.3.1 Example. The variation of location is significant in evaluating the range of damage possible. For example, consider a maximum credible event as a vehicle carrying 4,000 pounds (1,818 kg) of explosives at a standoff distance of 500 feet (152 m) to the perimeter boundary. The sets of design events that need to be considered are the maximum event, as well as other scenarios. One such scenario might be a car carrying 500 pounds (227 kg) of explosives that could maneuver within 100 feet (30 m) of the structure (assuming large vehicles are restricted from approaching the structure). Another scenario could be a motorcycle or bicycle with 50 pounds of explosives (23 kg) concealed in the frame that could maneuver within 50 feet (15 m), or be manually carried over or through the perimeter barrier and placed in or near the structure.

The controlling event is the scenario that produces the most damage to the structure. It may or may not be the maximum event. In this example, the 500-pound (227-kg) explosive at 100-foot (30 m) standoff is the controlling event, because it would create the highest blast pressures; the 50-pound (23kg) event would create the most localized damage.

Another major concern is the placement of the explosive. All locations must be considered to determine the position that would produce the greatest damage to the structure.

D.4 Blast Effects. The material developed for this section is based on vehicle bomb threats that can range from 50-pound (23-kg) to 40,000-pound (18,181-kg) bombs. These charge weights are considered the net equivalent weights of an uncased spherical TNT charge, the standard explosive used for assessing blast effects. The specific threat to structure should be based on available local intelligence or mandated requirements.

The type of explosive and its shape are known to affect blast yield. However, these factors tend to be relatively minor until a scaled distance of 10 is reached, because blast damage is related to the cube root of the charge weight. Designers typically assume the worst case of a hemispherically shaped explosive. The confinement around the explosive is also a factor in defining explosive yield. Limited testing on the effects of a vehicle on confinement of a small explosive charge shows that pressures are about 10 percent lower than free-air detonations.

APPENDIX D (Continued)

When an explosive detonates, it undergoes a rapid chemical reaction that propagates through the explosive material and converts the explosive into a very hot, dense, high-pressure gas. This energy is released in several forms, including sound, heat, light, and shock wave. The blast effects of an explosion are in the form of a shock wave that expands outward from the explosive surface at very high velocities. As this wave expands outwardly, it decays in strength (amplitude), but increases in duration.

D.4.1 Components of an Explosion. When a bomb explodes, the most important mechanism for damaging a structure is the shock wave. Ground shock, cratering, fragmentation, and fire are also factors that should be considered, but these usually have a minor effect when compared to the shock wave.

D.4.1.1 Shock Wave. The shock wave damages a target by the action of high pressures loaded on the target, usually many times the ordinary loads for which the structure was designed.

There are two aspects of the pressure wave that produce damage: the peak amplitude of the pressure and the duration of the pressure (i.e., how long the pressure acts on the structure). The integral part of the pressure-duration shock pulse is termed the "impulse" and is represented graphically as the area under the curve in a plot of the pressure-time pulse (Figure D-1). The impulse is equal to the amount of momentum imparted to the structure.

Peak pressure also controls the response for rigid structures, such as a box–like, reinforced-concrete building with a relatively short natural period. However, if the building is flexible, such as a steel frame with a long natural period compared to the duration of the shock wave, then the damage will be caused by the impulse imparted on the structure. Multiple reflections caused by pressure waves bouncing off surrounding buildings can vary greatly, and the wave shape will change depending on the site.

APPENDIX D (Continued)

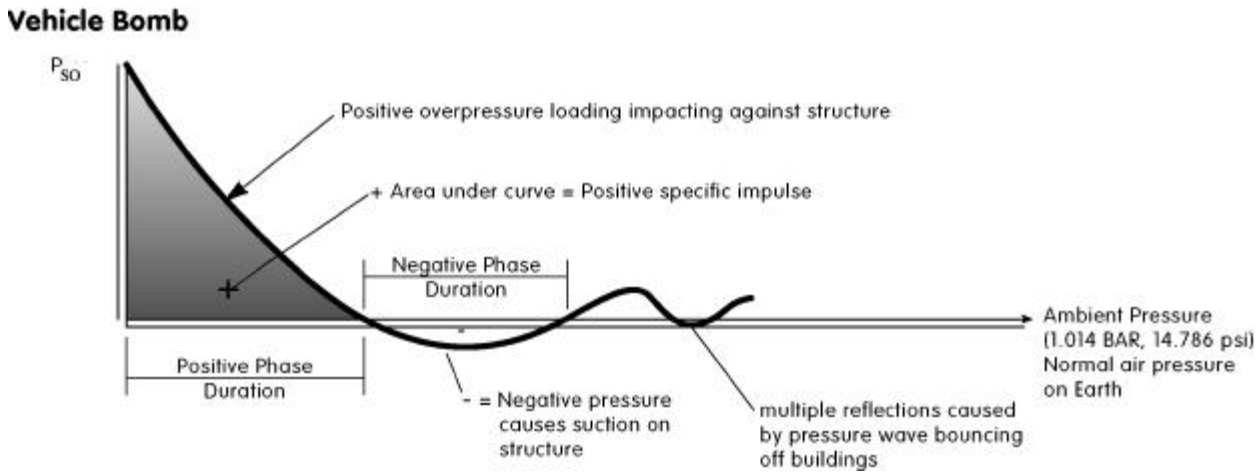


Figure D-1
Blast Pressure Wave

D.4.1.2 Ground Motion and Cratering. When a bomb explodes at or slightly above the ground surface, part of the energy forms a crater and sends a shock wave through the ground. The ground shock wave acts like a short duration earthquake, although the wave mechanisms have a compressional (vertical) effect on a structure, rather than the shear (lateral) effect that occurs during an earthquake. This factor may or may not be important, depending on the size of the explosion and how close it is to the structure.

D.4.1.3 Fragmentation. Generally, vehicle bombs will break into large pieces during an explosion. Heavy items, such as axles, engine blocks, and doors, may be thrown long distances. Initially, all bomb fragments are propelled by the explosion at a high rate of speed that slows down as they travel through air. Smaller fragments have a higher initial velocity, but lose their velocity more quickly than heavy fragments as they travel through the air.

Generally, primary fragmentation effects from the bomb itself are not as significant as blast effects in producing casualties. Fragments and airborne debris, resulting from the blast, are a more serious factor. These include shattering glass, falling parts of the building façade, and collapsing components of the structure.

D.4.1.4 Fire. Many structures are combustible, and fire can be a significant damage-producing mechanism, especially after an explosion has occurred. Fires can be started by high-explosive bombs, but the effect is negligible, compared to the damage caused by the shock wave.

D.4.1.5 Confined Detonation. In most instances, more damage is inflicted on a building by a confined blast detonating inside a structure than from an external explosion. When an explosive detonates in a confined space, the initial shock wave is amplified by the reflections of the blast wave on the internal walls of the structure. Generally, a portion of the structure will blow out, venting the blast. During this process, the full or partial confinement of the detonation produces a buildup of high-temperature gases. These gases result in a relatively long duration of pressure, termed gas pressure. The amplitude and duration of the gas pressure are functions of the charge weight, venting area, and volume of the confined space.

The environment within a confined or partially confined space is much more severe than that of an open-space detonation. A vehicle bomb allowed to penetrate into a building will cause significantly more damage than if it is detonated outside the building. However, when a bomb detonates within a structure, there is usually less damage to the surrounding buildings, because most of the blast is absorbed by the target structure.

D.4.2 Blast Effects From Distant Explosions. The following is a description of how blast loads on structures are determined. This is not a detailed procedure for use in engineering calculations, but rather an overview of the subject. It is limited to rectangular, above-ground structures that are distant from the explosion and subjected to a plane-wave shock front.

As discussed earlier, when a bomb explodes, a hemispherically expanding shock wave is formed. The forces acting on a structure associated with a shock wave depend on the peak incident pressure, the impulse of the incident pressure, and the dynamic wind pressures acting on the structure. For each incident pressure level there is a blast wind. In the wake of this blast wind, there is a secondary blast wind that is composed of air particles rushing in to fill the vacuum left by the shock wave. This secondary blast wind is referred to as a dynamic drag pressure and is responsible for drawing debris away from the building at considerable distances.

For any given incident, the forces imparted to a structure can be divided into four general components:

a) The force resulting from the incident pressure;

b) The force associated with the dynamic wind pressures;

c) The force resulting from reflection of the incident pressure (termed reflected pressure) striking the building;

d) Pressures associated with the negative phase of the shock wave.

APPENDIX D (Continued)

When the incident pressure strikes a wall or building, as shown in Figure D-2, it is reflected back and amplified, much like an ocean wave crashing against a retaining wall. This stops the wave and causes water to accumulate, run up the wall, and then reflect back.

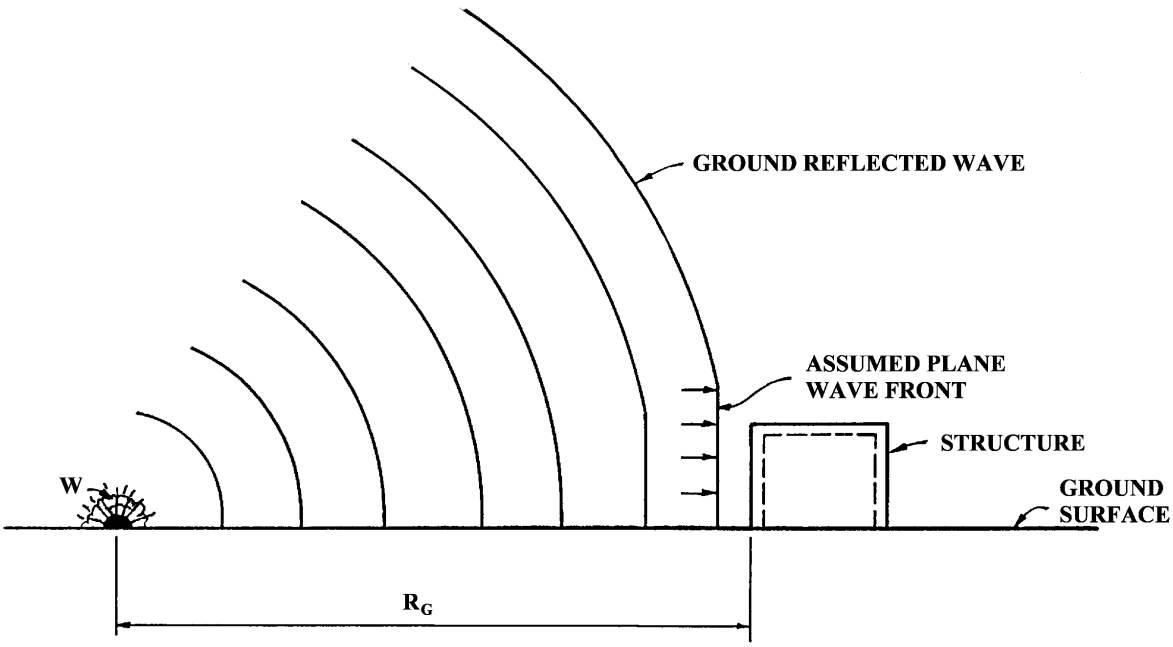


Figure D-2
Effects of a Blast Wave on a Building

The relative significance of each of the four components is dependent upon the geometry and size of the structure, the orientation of the structure relative to the shock front, and the level of the blast loads.

The interaction of the incident blast wave with an object is a complicated process. To reduce this complex problem to reasonable terms, it will be assumed here that the structure is generally rectangular in shape and the incident pressure of interest is on the order of 200 pounds per square inch (14 kilograms per square centimeter) or less.

APPENDIX D (Continued)

Testing has shown that peak pressure and pressure-related effects scale as a function of the separation distance between the explosives and the structure, "**R**", divided by the cube root of the charge weight, "**W**". Design engineers commonly use scaled distance in calculating the effects of explosions. Equation (D-1) expresses this calculation:

EQUATION: $$\textbf{Scaled Distance} = R/W^{1/3} \qquad \text{(D-1)}$$

where:

**R** = separation distance
**W** = charge weight

Tables D-1 and D-2 give the peak side-on incident pressure and the peak reflected pressure as a function of the charge weight and separation distance.

Table D-1
Distances in Feet (Meters) for Peak Pressure From 50- to 4,000-Pound
(22.7 to 1,818 kg) Hemispherical TNT Explosions on the Surface

| **Incident Pressure Psi (kgf/sq cm)** | **Reflected Pressure Psi (kgf/sq cm)** | **$R/W^{1/3}$** | **50 lb (23.7 kg)** | **220 lb (100 kg)** | **500 lb (227 kg)** | **1,000 lb (454 kg)** | **4,000 lb (1,818 kg)** |
|---|---|---|---|---|---|---|---|
| 100 (7) | 500 (35) | 3.7 | 14 (4.2) | 22 (6.7) | 29 (8.8) | 37 (11.2) | 59 (17.9) |
| 29 (2.0) | 91 (6.4) | 6 | 22 (6.7) | 36 (10.9) | 48 (14.6) | 60 (18.2) | 95 (29) |
| 12 (0.84) | 31 (2.17) | 9 | 33 (10.0) | 54 (16.4) | 71 (21.6) | 90 (27.4) | 143 (43) |
| 8.4 (0.59) | 15 (1.05) | 11 | 40 (12.2) | 66 (20.1) | 87 (26.4) | 110 (33.4) | 174 (53) |
| 3.6 (0.25) | 8 (0.56) | 18 | 66 (20.1) | 108 (32.8) | 143 (43.5) | 180 (54.7) | 285 (87) |
| 2.3 (0.15) | 4.6 (0.32) | 24 | 92 (28.0) | 151 (45.9) | 198 (60.2) | 250 (76.0) | 397 (121) |
| 1.7 (0.12) | 3.6 (0.25) | 30 | 110 (33.4) | 181 (55.0) | 238 (72.3) | 300 (91.2) | 476 (145) |
| 1.1 (0.08) | 2.4 (0.17) | 40 | 147 (44.7) | 241 (73.3) | 317 (96.4) | 400 (122) | 633 (192) |
| 0.8 (0.06) | 1.8 (0.13) | 50 | 184 (55.9) | 301 (91.5) | 396 (120) | 500 (152) | 793 (241) |

APPENDIX D (Continued)

Table D-2
Distances in Feet (Meters) for Peak Pressure from 10,000- to 40,000-Pound (4,545 to 18,182 kg) Hemispherical TNT Explosions on the Surface

| **Incident Pressure Psi (kgf/sq cm)** | **Reflected Pressure Psi (kgf/sq cm)** | **$R/W^{1/3}$** | **10,000 lb (4,545 kg)** | **20,000 lb (9,091 kg)** | **30,000 lb (13,636 kg)** | **40,000 lb (18,182 kg)** |
|---|---|---|---|---|---|---|
| 100 (7) | 500 (35) | 3.7 | 80 (24.3) | 100 (30.4) | 115 (35.0) | 126 (38.3) |
| 29 (2.0) | 91 (6.4) | 6 | 129 (39.2) | 163 (49.5) | 186 (56.5) | 205 (62.3) |
| 12 (0.84) | 31 (2.17) | 9 | 194 (59.0) | 244 (74.2) | 280 (85.1) | 308 (93.6) |
| 8.4 (0.59) | 15 (1.05) | 11 | 237 (72.0) | 298 (90.6) | 342 (104) | 376 (114) |
| 3.6 (0.25) | 8 (0.56) | 18 | 388 (118) | 488 (148) | 559 (170) | 615 (187) |
| 2.3 (0.15) | 4.6 (0.32) | 24 | 538 (164) | 678 (206) | 777 (336) | 855 (260) |
| 1.7 (0.12) | 3.6 (0.25) | 30 | 646 (196) | 814 (247) | 932 (283) | 1,026 (312) |
| 1.1 (0.08) | 2.4 (0.17) | 40 | 862 (262) | 1085 (330) | 1242 (377) | 1,367 (415) |
| 0.8 (0.06) | 1.8 (0.13) | 50 | 1,077 (327) | 1,357 (412) | 1,553 (472) | 1,709 (519) |

The form of the incident blast wave (Figure D-1) is characterized by an abrupt rise in pressure to a peak value, a period of decay to ambient pressure, and a period in which the pressure drops below ambient (negative pressure phase). The negative pressure phase is not generally important in the design of structures to resist the effects of blast loads. It is primarily responsible for debris disbursement.

When the incident shock wave strikes the front wall of a structure (assumed to be parallel to the shock front), an increase in pressure to a higher (reflected) level occurs, as discussed above. A simplified, idealized illustration of design pressure loading is shown in Figure D-2. The reflected pressure will decay based on the geometry of the structure.

APPENDIX D (Continued)

As the blast wave continues to travel across the structure, the roof and sides and rear walls are also loaded. These loadings are combinations of the incident pressure and the drag pressure.

D.4.3 Combined Damage Mechanisms. A structure subjected to an explosive blast receives the effects of air blast, fragments, fire, and ground shock. Generally, the air blast is the dominant factor in damage production. The size and construction of the target structure are factors that affect the amount of damage produced. A large bomb will have a major effect on a small building, while a small bomb will only affect a local area of a large building.

While a small bomb may only be capable of producing 5- or 10-percent total damage to a building, there could be 100-percent damage over a local area.

There are a variety of building types and functions. Industrial buildings differ in construction from an administrative office building and tend to be of simpler construction and have a higher degree of ruggedness. Windows represent the most vulnerable element of a building and are easily damaged at very low pressures.

D.4.4 Pressure Effects on Structures and Glazing. Glazing is usually the weakest element of a structure. The area around a blast scene will contain numerous buildings with broken windows, extending out to a distance of about seven times greater than that of the structural damage. This means the blast area producing glazing damage will be about 50 times greater than that subjected to other structural damage.

D.4.5 Blast Loading for Close Detonations to Structures. An explosion close to a building will result in large variations in the pressure-time loading function at points on the building, depending on the distance and angle of the explosive to a specific point. The effect is shown in Figure D-3. The pressure-time loading function is again assumed to be triangular, as shown in Figure D-1. The Tri-Service design manual, NAVFAC P397/TM5-1300/AFR 88-22, gives the average peak pressure and impulse on a wall to be used for explosions close to a wall.

APPENDIX D (Continued)

SEQUENCE OF STRUCTURAL DAMAGE WITH BOMB CLOSE TO STRUCTURE

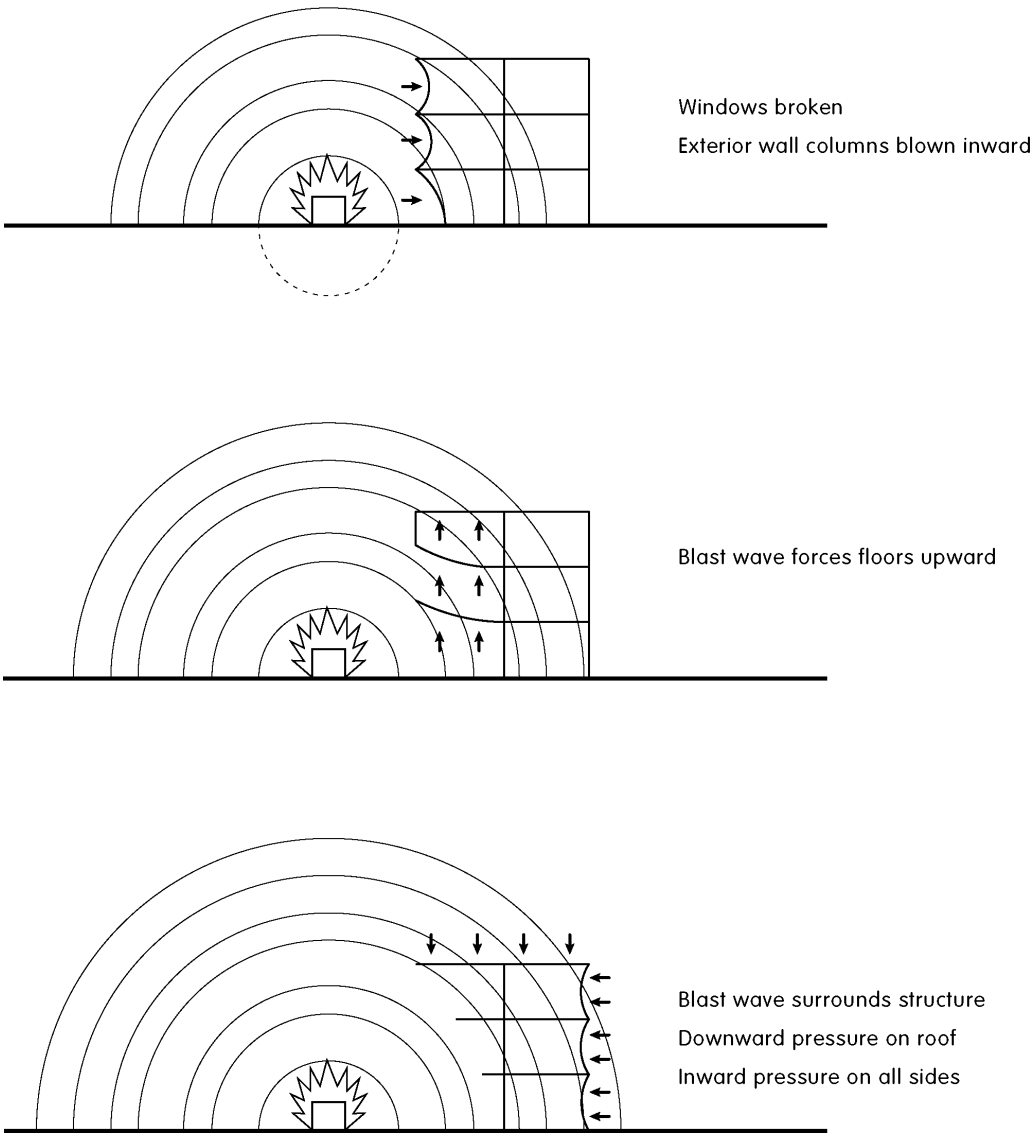


Figure D-3
Pressure Effects on a Structure for Close-In Explosion

APPENDIX D (Continued)

D.5 Blast Damage Analysis

D.5.1 Blast Damage Effects. As noted above, pressure and pressure-related effects have been found to scale based on the $R/W^{1/3}$ ratio. Table D-3 shows the blast effects that might occur at typical scaled distances.

Table D-3
Damage as a Function of Pressure and Distance

| $R/W^{1/3}$ | Damage |
|---|---|
| **6** | Corresponds to an incident pressure of 29 psi (2.03 kgf/sq cm) when the source of an explosion is in the open. Conventional, unstrengthened buildings will be destroyed completely. |
| **9** | Corresponds to an incident pressure of 12 psi (0.84 kgf/sq cm) when the source of an explosion is in the open. Unstrengthened buildings will suffer severe structural damage approaching total destruction. |
| **10 to 11** | Corresponds to an incident pressure of 8.4 psi (0.59 kgf/sq cm) when the source of an explosion is in the open. Unstrengthened buildings will suffer damage approaching total destruction. |
| **18** | Corresponds to an incident pressure of 3.6 psi (0.25 kgf/sq cm) when the source of an explosion is in the open. Damage to unstrengthened buildings will be serious, and will approximate 50% or more of the total replacement cost. |
| **24 to 25** | Corresponds to an incident pressure of 2.3 psi (0.16 kgf/sq cm) when the source of an explosion level is in the open. Unstrengthened buildings can be expected to sustain damage approximating 20% of their replacement cost. |
| **30** | Corresponds to an incident pressure of 1.7 psi (0.12 kgf/sq cm) when the source of an explosion is in the open. Unstrengthened buildings can be expected to sustain damage approximating 10% of their replacement cost. Typically 100% of glazing will be broken. |
| **40** | Corresponds to an incident pressure of 1.1 psi (0.08 kgf/sq cm) when the source of an explosion is in the open. Unstrengthened buildings can be expected to sustain damage up to about 5% of their replacement cost. About 60% of ordinary glazing will be broken. |
| **50** | Corresponds to an incident pressure of 0.8 psi (0.06 kgf/sq cm) when the source of an explosion is in the open. About 30 % of the ordinary glazing will be broken. |

D.5.2 Blast Injury to Personnel. There are two basic types of blast forces that occur simultaneously in a detonation blast wave: the direct blast wave overpressure forces and the indirect blast wind drag forces. As described in FM 8-9/NAVMED P5059/AFJMAN 44-151VIV2V3, the most important blast effects, insofar as production of casualties requiring medical treatment is concerned, will be those due to the blast wind drag forces. Direct overpressure effects do not extend out as far from the point of detonation and are frequently masked by drag force effects. However, direct blast effects can contribute significantly to the immediate deaths and injuries sustained close to the point of detonation and, therefore, constitute an important total casualty-producing effect.

D.5.2.1 Effects of a Blast Wave. When the blast wave acts directly upon a resilient target, such as the human body, rapid compression and decompression result in transmission of pressure waves through the tissues. These waves can be quite severe and will result in damage primarily at junctions between tissues of different densities (bone and muscle) or at the interface between tissue and air spaces. Lung tissue and the gastrointestinal system, both of which contain air, are particularly susceptible to injury. The resulting tissue disruptions can lead to severe hemorrhage or to an air embolism, either of which can be fatal. Perforation of the eardrums is also a common, but minor, blast injury.

The range of overpressures associated with lethality can be quite variable. It has been estimated that overpressures as low as 28 psi (1.96 kgf/sq cm) can be lethal, but that survival is possible with overpressures as high as 38 psi (2.66 kgf/sq cm). Table D-4 summarizes a typical range of probability of lethality with variation in overpressure.

Table D-4
Pressure/Lethality

| **Lethality (Approximate percent)** | **Peak Overpressure (psi)** | **Peak Overpressure (kg/sq cm)** |
|---|---|---|
| 1 | 23 – 33 | 1.6 - 2.3 |
| 50 | 33 – 58 | 2.3 - 4.0 |
| 100 | 58 + | 4.0 + |

D.5.2.2 Injury From a Blast Wave. It is important to have an appreciation of the potential for human injury. The human body is remarkably resistant to static overpressure, particularly when compared with rigid structures, such as buildings. Incident pressures considerably lower than those listed in Table D-4 will cause injuries that are not lethal.

Lung damage, a serious injury usually requiring hospitalization, and eardrum rupture, a minor injury often requiring no treatment at all, are two trauma points that are useful. The threshold level of incident pressure that is estimated to cause lung damage is about 10 psi (0.7 kgf/sq cm). The threshold value for eardrum rupture is around 3.2 psi (0.22 kgf/sq cm) and that overpressure associated with a 50-percent probability of eardrum rupture ranges from 13 to 19 psi (0.91 to 1.33 kgf/sq cm). Casualties requiring medical treatment from direct blast effects could theoretically be produced by overpressures greater than 10 psi (0.7 kgf/sq cm). However, direct blast injuries will not occur by themselves; and in general, other effects, such as indirect blast injuries, are so severe at the ranges associated with these overpressures that victims with direct blast injuries will comprise a very small part of the total.

D.5.2.3 Injury From Drag Forces and Debris. Drag forces of the blast can be extremely severe. Considerable injury can result at greater distances from being hit by debris or being blown over. The distance at which the peak overpressure is about 3 psi (0.21 kgf/sq cm) is a reasonable reference distance at which the probability of serious indirect injury is high. Injuries can occur at greater ranges, and casualties will be generated at greater ranges, but not consistently.

The probability of injury from debris depends on a number of factors: the number of projectiles available, the terrain, and the size and weight of the debris that will be low velocity in nature. None will be high velocity, such as is produced by direct bomb fragments.

The weight of an object and the duration of the drag force winds determine how fast it will go. Light objects will be accelerated rapidly up to the maximum possible velocity, whereas heavy objects may not be. The velocity is important, because the probability of a penetrating injury increases with increasing velocity, particularly for small, sharp missiles, such as glass fragments.

Heavy blunt missiles will not penetrate, but can result in significant injury, particularly fractures. For example, a velocity of about 15 feet per second is a threshold velocity for skull fracture for a 10-pound object.

The drag forces of the blast winds are strong enough to displace even large objects, such as vehicles. These can result in very serious crush injuries. Humans themselves can become a missile and be displaced significant distances. The resulting injuries sustained are termed translational injuries. The probability and the severity of injury depend on the velocity of the human body at the time of impact.

APPENDIX D (Continued)

Debris and collapse of the structure will cause most of the casualties from a vehicle bomb blast. The percentage of deaths will increase with the percentage collapse of the structure.

Tables D-5 and D-6 show the level of injury expected by personnel exposed to the blast loading in the open.

Table D-5
Distances in Feet (Meters) to Produce Injury or Death in the Open
for 50- to 4,000-Pound (37.7- to 1,818-kg) Bombs

| **Injury Level** | **Charge Weights in Pounds (kg)** | | | | |
|---|---|---|---|---|---|
| | **50 lb (23.7 )** | **220 lb (100)** | **500 lb (227)** | **1,000 lb (454)** | **4,000 lb (1,818)** |
| Severe injuries or death | 33 (10.0) | 54 (16.4) | 71 (21.6) | 90 (27.4) | 143 (43) |
| Lung injuries & 20% eardrum rupture | 40 (12.2) | 66 (20.1) | 87 (26.4) | 110 (33.4) | 174 (53) |
| Serious injuries | 66 (20.1) | 108 (32.8) | 143 (43.5) | 180 (54.7) | 285 (87) |
| Injury & temporary hearing loss | 92 (28.0) | 151 (45.9) | 198 (60.2) | 250 (76.0) | 397 (121) |
| Injury from debris | 110 (33.4) | 181 (55.0) | 238 (72.3) | 300 (91.2) | 476 (145) |
| High degree of protection from death; injuries from broken glass or debris | 147 (44.7) | 241 (73.3) | 317 (96.4) | 400 (122) | 633 (192) |

APPENDIX D (Continued)

Table D-6
Distances in Feet (Meters) to Produce Injury or Death
for 10,000- to 40,000-Pound (4,545- to 18,182-kg) Bombs

| **Injury Level** | **Charge Weights in Pounds (kg)** | | | |
|---|---|---|---|---|
| | **10,000 lb (4,545)** | **20,000 lb (9,091)** | **30,000 lb (13,636)** | **40,000 lb (18,182)** |
| Severe injuries or death | 194 (59.0) | 244 (74.2) | 280 (85.1) | 308 (93.6) |
| Lung injuries & 20% eardrum rupture | 237 (72.0) | 298 (90.6) | 342 (104) | 376 (114) |
| Serious injuries | 388 (118) | 488 (148) | 559 (170) | 615 (187) |
| Injury & temporary hearing loss | 538 (164) | 678 (206) | 777 (336) | 855 (260) |
| Injury from debris | 646 (196) | 814 (247) | 932 (283) | 1,026 (312) |
| High degree of protection from death; injuries from broken glass or debris | 862 (262) | 1,085 (330) | 1,242 (377) | 1,367 (415) |

D.5.3 Evaluation of Blast Damage to Structures. A federal installation or other target of terrorists can contain a wide variety of construction types. The categories of wood, masonry, reinforced concrete, and steel have been chosen to illustrate the range of damage possible. These may serve as a rough guide when like construction is found. A methodology has been developed to use pressure impulse curves to estimate damage. This work is documented in the “Facility Component Explosive Damage Assessment Program”. A computer program was developed using Explosive Risk and Structural Damage Assessment Code (ERASDAC), Blast Damage Assessment Model (BDAM), and the Facility and Component Explosive Damage Assessment Program (FACEDAP).

Component damage and total target damage is related to weapon yield and range as a percentage of economic loss. The size of the target is a factor in determining total target damage. The percentage of loss is described qualitatively and in terms of survivability (e.g., reusability and repairability of the target). Although the damage to contents is not specifically addressed, the target damage description may be adequate for a person with knowledge of the contents and operational mission to determine the approximate damage.

APPENDIX D (Continued)

D.5.4 Damage Potential. The primary damage from a terrorist bomb is blast and fragmentation. Combustible materials may also be subject to secondary fire. Table D-7 defines the categories that cover the range of possible damage. It should be noted that these are broad ranges and any single bomb detonation may deviate from the average observed/computed damage expected. The damage depends on the weapon orientation, its height above the ground, and distance from the structure.

The damage should be interpreted as the percentage of the building square footage destroyed or unusable. It is important to understand that these are only estimates. Specific site conditions will affect the results. A small bomb will inflict little overall damage on a large building, but may have a significant effect on a local section. Conversely, a bomb of the same size may totally destroy a small building.

For further guidance on this subject, refer to TM 5-853/AFMAN 21-1071, Vols. 1, 2, and 3. The damage categories listed in Table D-7 correlate to this document as follows:

Moderate Damage Level = Low Level of Protection
Minor Damage Level = Medium Level of Protection
Minimal Damage Level = High Level of Protection

Table D-7
Structural Damage Level Categories

| **Structural Damage Level** | **Percent Damaged*** | **Damage Description** | **Repairable/ Reusable** |
|---|---|---|---|
| Severe | 60 to 100 | Possible Collapse. Frame collapse/ massive destruction; little left standing | No |
| Heavy | 40 to 60 | Non-Repairable. Large deformation of structure members; Major nonstructural component damage | Very unlikely |
| Moderate | 20 to 40 | Extended Disruption, Repairable. Some deformation of structural members; extensive nonstructural damage | Possible |
| Minor | 10 to 20 | Repairable. Little or no damage to major structural members; some damage to nonstructural members | Most probably |
| Minimal | 0 to 10 | Quickly Repairable or Essentially Operable. Window damage extensive; light or local damage to nonstructural members | Yes |

* Percentage of damage of total building as a percentage of total building square footage

D.5.5 General Building Construction. Knowing the charge weight, it is possible to develop general guidelines based on the performance of average construction.

Reinforced-concrete buildings, steel-frame buildings, and reinforced-masonry buildings will perform equal to, or better than, these average levels of performance. Prefabricated steel buildings will perform about average. Wood, non-reinforced masonry, and glass-faced buildings will perform worse than these averages.

The blast mechanism destroys a building by overloading elements, such as walls, that receive the full load. Even very modest blast pressure loads are in excess of conventional wind loads. Brittle elements, such as non-reinforced masonry, are easily ruptured and collapse. More durable walls, such as those made of concrete, deflect and crack extensively, usually spalling (material shattered by the blast load and projected into the surrounding area) off most of the concrete cover over the reinforcement.

Voids (i.e., broken windows) will allow the blast pressure to leak into the building. If the walls remain sufficiently intact, the blast load is then transferred into the supporting frame, which collects the load from all the tributary areas and is itself overloaded. Typically, columns near the blast side of the building, lacking sufficient shear resistance at the end connections, are totally dislodged and blown inward. This results in a progressive collapse mechanism. Progressive collapse is defined as the sequential failure of components of a building, leading to a total structural failure. For example, a column failure leads to support-beam failures, which then cause other floors and columns above them to fail in sequence.

Progressive collapse is a critical factor in structures lacking redundant elements and load paths. Consider a building roof truss, which is a structural frame, usually based on the rigidity of a triangle and composed of straight members subject to longitudinal compression or tension or both, functioning as a beam or cantilever. If a truss is damaged by failure of one of its bottom tension members, it will deflect and sag and be unable to carry any load. The roof load will be transferred to adjacent trusses. The load on these adjacent trusses will exceed the design capacity, resulting in the failure of additional trusses and, ultimately, failure of the entire roof system. Redundant lateral bracing helps limit this damage.

A similar process could occur with damage to one of the columns supporting roof beams or trusses. Destruction of the supporting column results in failure of the member being supported, which then redistributes the load to surrounding columns and places additional forces on these members from the sagging structure.

Failure of connections is also a critical area for progression of collapse. Blast loading may dislodge footings, which damages columns, which then affects the beams. Often, an explosion may load a structure in a direction opposite to the way it was intended to carry loads,

such as an upward blast load acting opposite to gravity (see Figure D-3). Such a load would reverse the load pattern on a beam. Concrete beams that have differing amounts of compressive (usually top) and tensile (usually bottom) reinforcement may not be able to accommodate this load reversal. For this reason, damage is often more severe above an explosion.

As discussed above, the debris, fragments, and collapsing rubble causes most injuries associated with the blast, rather than the shock wave pressure itself.

D.5.6 General Guide for Building Damage. Knowing the expected charge weight, it is possible to develop a general rule of thumb for predicting damage, based on the behavior of typical construction. The distances shown in Tables D-8 and D-9 are averages for all types of construction, and reflect generally good construction practices. These tables were developed using the ERASDAC, BDAM, and FACEDAP computer programs for damage prediction. Specific results were then reviewed for conformity to general experience. Tables D-8 and D-9 are used in conjunction with Table D-7 to establish standoff distance based on acceptable damage levels.

Table D-8
Distances in Feet (Meters) to Produce Structural Damage
for 50- to 4,000-Pound (37.7- to 1,818-kg) Bombs

| **Structural Damage Category** | **$R/W^{1/3}$** | **50 lb (23.7)** | **220 lb (100)** | **500 lb (227)** | **1,000 lb (454)** | **4,000 lb (1,818)** |
|---|---|---|---|---|---|---|
| Severe | 10 | 37 (11.3) | 60 (18.3) | 79 (24.1) | 100 (30.5) | 158 (48.1) |
| Heavy | 18 | 66 (20.1) | 108 (32.8) | 143 (43.5) | 180 (54.7) | 285 (86.9) |
| Moderate | 24 | 88 (26.8) | 145 (44.2) | 190 (57.9) | 240 (73.1) | 380 (115.8) |
| Minor | 30 | 103 (31.4) | 169 (51.5) | 222 (67.7) | 280 (85.3) | 443 (135.0) |
| Minimal | 40 | 147 (44.7) | 241 (73.3) | 317 (96.4) | 400 (121.9) | 633 (192.9) |

APPENDIX D (Continued)

Table D-9
Distances in Feet (Meters) to Produce Structural Damage
for 10,000- to 40,000-Pound (4,545- to 18,182-kg) Bombs

| **Structural Damage Category** | **$R/W^{1/3}$** | **10,000 lb (4,545)** | **20,000 lb (9,091)** | **30,000 lb (13,636)** | **40,000 lb (18,182)** |
|---|---|---|---|---|---|
| Severe | 10 | 215 (65.5) | 271 (82.6) | 311 (94.8) | 342 (104.2) |
| Heavy | 18 | 388 (118.2) | 488 (148.7) | 559 (170.4) | 615 (187.4) |
| Moderate | 24 | 517 (157.6) | 651 (198.4) | 745 (227.1) | 820 (249.9) |
| Minor | 30 | 603 (183.8) | 760 (231.6) | 870 (265.2) | 957 (291.7) |
| Minimal | 40 | 862 (262.7) | 1,085 (330.7) | 1,242 (378.5) | 1,367 (416.6) |

D.5.7 Estimation of Window Damage. Generally, buildings contain windows that are highly vulnerable to damage from the effects of an explosion. Common annealed glass will normally fail between 0.2 psi and 0.5 psi (0.014 to 0.035 kgf/sq cm). Table D-10 shows the distances for threshold breakage of two conventional window sizes. Smaller windows will withstand slightly higher pressures (which equates to smaller standoff distances) than large windows. The ratio of length to width (aspect ratio) and thickness also have a minor effect.

Table D-10
Conventional Window Breakage Threshold Distances in Feet (Meters)
for 50- to 4,000-Pound (37.7- to 1,818-kg) Bombs

| **Sample Description** | **50 lb (23.7)** | **220 lb (100)** | **500 lb (227)** | **1,000 lb (454)** | **4,000 lb (1,818)** |
|---|---|---|---|---|---|
| Ordinary Annealed Commercial Window 48 x 96 x 1/4 inches | 636 (193) | 1,596 (485) | 2,534 (770) | 3,584 (1,089) | 6,478 (1,969) |
| Ordinary Annealed Residential Window 28 x 36 x 3/16 inches | 597 (181) | 1,167 (355) | 1,619 (492) | 2,102 (639) | 3,458 (1,051) |

NOTE: Table D-10 is provided only to illustrate the relatively low strength and fragility of conventional glazing systems. It is not intended for design or selection purposes.

APPENDIX D (Continued)

D.6 Blast Mitigation. Design of blast mitigation measures for structures is beyond the scope of this handbook. Structural hardening options include structural changes to doors, windows and window frames, columns, floors, and walls impacted by the explosive blast wave. For design guidance on these subjects, refer to NAVFAC P397/TM5-1300/AFR 88-22, FM 8-9/NAVMED P5059/AFJMAN 44-151VIV2V3, and "Blast Vulnerability Guide." For design guidance on hardening of glazing systems, consult Military Handbook 1013/12.

# APPENDIX E
# PERFORMANCE DATA FOR ACTIVE AND PASSIVE VEHICLE BARRIERS

## E.1 Scope

E.1.1 Scope. This appendix presents performance data for commercial vehicle barriers and passive barriers. The information contained herein is intended for guidance only.

## E.2 Definitions

The definitions in Section 3 of this handbook apply to this appendix.

## E.3 Active Barriers

E.3.1 Performance Data for Active Barriers. The commercial active barriers shown in Table E-1 have been formally tested.

APPENDIX E (Continued)

Table E-1
Performance for Active Barriers

| **Model** | **Kinetic Energy ft-lbf (kgf-m) x 1,000,000** | **Penetration ft (m)** |
|---|---|---|
| VSB 80187 P10* | 1.2 (0.16) | 9.2 (2.8) |
| VSB 80187-10* | 1.2 (0.16) | 9.2 (2.8) |
| | | |
| TT205 | Not Available | |
| TT207 | 1.2 (0.16) | 29 |
| TT207(S)* | 1.2 (0.16) | 3 (0.9) |
| TT207SFM | 1.2 (0.16) | 3 (0.9) |
| TT203 | 0.349 (0.048) | 12.2 (3.7) |
| TT203M | 0.349 (0.048) | 12.2 (3.7) |
| TT210* | 0.445 (0.06) | 3 (0.9) |
| TT210M | 0.445 (0.06) | 3 (0.9) |
| TT212 | 0.108 (0.014) | 3 (0.9) |
| TT212E | 0.410 (0.056) | 3 (0.9) |
| TT280* | 1.2 (0.16) | 3 (0.9) |
| TT281 | 1.2 (0.16) | 3 (0.9) |
| NMSB II * | 1.2 (0.16) | 3 (0.9) |
| NMSB IIIb* | 1.2 (0.16) | 3 (0.9) |
| NMSB IV* | 1.2 (0.16) | 3 (0.9) |
| NMSB VIIa* | 0.9 (0.11) | 3 (0.9) |
| Magnum* | 1.2 (0.16) | 3 (0.9) |
| Portapungi* | 0.8 (0.11) | 40 (12) |
| Defender* | 0.445 (0.06) | 10.5 (3) |
| Stinger* | 1.2 (0.16) | 3 (0.9) |
| SEMA 4 | 0.034 (0.005) | 3 (0.9) |

*Department of State-Certified Barriers

APPENDIX E (Continued)

E.4 Passive Barriers

E.4.1 Performance Data for Passive Barriers. Table E-2 is a summary of performance data for selected passive barriers.

Table E-2
Performance for Passive Barriers

| **Barrier** | **Kinetic Energy ft-lbf (kgf-m) x 1,000** | **Penetration ft (m)** |
|---|---|---|
| Anchored concrete Jersey barrier, non-reinforced | 334.4 | 20 |
| Buried tires, 36-ply, 8-ft (2.4-m) diameter, weighing 2,000 lb (909 kg) each | 285.7 | 1 |
| Eight-inch (20.3-cm) diameter bollard system @ 3 feet (0.9 m) on center with 12-inch (30.5-cm) channel rail | 1,108 | None |
| Standard chain link fence [7 ft (2.1 m), 9 ga w/ outrigger] and one 3/4-inch (1.9-cm) diameter cable | 61.9<br>346.8 | 7<br>26 |
| Eight-inch (20.3-cm) diameter concrete-filled pipe | 135.4 | 1.5 |
| Concrete planter barrier | 1,080 | 31.2 |
| Cable barrier [200-ft (60.9-m) anchorage spacing]* | | |
| One cable @ 3/4-inch (1.9-cm) dia. | 100 | 40 |
| Two cables @ 3/4-inch (1.9-cm) dia. | 200 | 40 |
| Three cables @ 3/4-inch (1.9-cm) dia. | 338 | 40 |
| Four cables @ 3/4-inch (1.9-cm) dia. | 418 | 40 |
| One cable @ 1-inch (2.5-cm) dia. | 150 | 40 |
| Two cables @ 1-inch (2.5-cm) dia. | 340 | 40 |
| Three cables @ 1-inch (2.5-cm) dia. | 506 | 40 |
| Four cables @ 1-inch (2.5-cm) dia. | 706 | 40 |
| Reinforced-concrete retaining wall<br>6 inches (15.2 cm) thick<br>21 inches (53.3 cm) thick | 157.1 | None |
| Cable barrier – two 3/4-inch (1.9-cm) | 361.7 | 13 |

* Based on analytical modeling, using BIRM (PDC-TR90-2) or other finite element analysis process

INDEX


| | Paragraph | Page |
|---|---|---|
| **A** | | |
| Acceptable damage and injury levels | 5.2.2 | 9 |
| Accepting additional risk | 5.2.3 | 9 |
| **Acronyms** | 3.1 | 4 |
| Actions to avoid | 7.3 | 33 |
| Active barrier systems | 7.1.1 | 27 |
| Active barrier systems | 8.1 | 36 |
| Aesthetics | 7.2.3 | 28 |
| Alternative solutions to inadequate standoff distance | 5.2.5 | 10 |
| Attack routes parallel to the barrier | 6.4.3 | 22 |
| Attainable vehicle speed | 6.4 | 15 |
| Attainable vehicle speed on a curved path | 6.4.2 | 19 |
| Attainable vehicle speed on a straight path | 6.4.1 | 15 |
| **B** | | |
| Barrier capability | 7.4 | 33 |
| Barrier operations | 7.2.9 | 30 |
| Blast damage analysis | D.5 | 104 |
| Blast damage effects | D.5.1 | 104 |
| Blast effects | D.4 | 95 |
| Blast effects from distant explosions | D.4.2 | 98 |
| Blast injury to personnel | D.5.2 | 105 |
| Blast loading for close detonations to structures | D.4.5 | 102 |
| Blast mitigation | D.6 | 113 |
| Building performance levels | D.2 | 93 |

INDEX


| | Paragraph | Page |
|---|---|---|
| **C** | | |
| Clear zones | 7.2.10 | 30 |
| Combined damage mechanisms | D.4.3 | 102 |
| Components of an explosion | D.4.1 | 96 |
| Concrete median | 8.2.2 | 61 |
| Concrete planter | 8.2.3 | 63 |
| Concrete-filled bollard | 8.2.1 | 60 |
| Confined detonation | D.4.1.5 | 98 |
| Controlling event | D.3.2 | 95 |
| Cost | 7.2.8 | 29 |
| Cost data for active barriers | C.4.2 | 91 |
| Cost data for passive barriers | C.5.1 | 92 |
| Cost effectiveness | 7.2.17 | 31 |
| Cost of security | 4.3 | 5 |
| Crisp and Associates vehicle surface barrier | 8.1.1 | 36 |
| **D** | | |
| Damage potential | D.5.4 | 109 |
| Delta Scientific bollard systems | 8.1.3 | 40 |
| Delta Scientific crash beam barrier system | 8.1.4 | 43 |
| Delta Scientific linear crash gate system | 8.1.5 | 44 |
| Delta Scientific vehicle barricade system | 8.1.2 | 38 |
| Design considerations | 7.2 | 27 |
| Design events | D.3.3 | 95 |
| Design parameters | 5.3.1 | 11 |
| DOS rating for active barriers | C.4.1 | 89 |

INDEX


| | Paragraph | Page |
|---|---|---|
| **E** | | |
| Effect of adjacent structures on blast loads | D.5.1 | 104 |
| Effects of a blast wave | D.5.2.1 | 105 |
| Environment | 7.2.11 | 30 |
| Essentially operable | D.2.6 | 94 |
| Estimation of window damage | D.5.7 | 112 |
| Evaluation of blast damage to structures | D.5.3 | 108 |
| Examples for protection against terrorist vehicle bombs | B.4 | 85 |
| Excavations and ditches | 8.2.4 | 64 |
| Expedient barrier systems | 8.2.13 | 81 |
| Extended disruption, repairable | D.2.3 | 94 |
| **F** | | |
| Fencing | 7.2.1 | 27 |
| Final selection | 5.3.3 | 11 |
| Fire | D.4.1.4 | 97 |
| Fixed barrier systems | 7.1.3 | 27 |
| Fragmentation | D.4.1.3 | 97 |
| **G** | | |
| General building construction | D.5.5 | 110 |
| General guide for building damage | D.5.6 | 111 |
| Government documents | 2.2 | 2 |
| Ground motion and cratering | D.4.1.2 | 97 |
| Guardrails | 8.2.5 | 66 |
| **H** | | |
| Heavy equipment tires | 8.2.6 | 67 |

INDEX


| | Paragraph | Page |
|---|---|---|
| **I** | | |
| Initial considerations | 5.2.1 | 6 |
| Injury from a blast wave | D.5.2.2 | 105 |
| Injury from drag forces and debris | D.5.2.3 | 106 |
| Installation requirements | 7.2.12 | 30 |
| Intended use | 9.1 | 82 |
| **K** | | |
| Key word listing | 9.2 | 82 |
| King Tut blocks | 8.2.8 | 69 |
| **L** | | |
| Liabilities | 7.2.18 | 33 |
| Location | 7.2.2 | 28 |
| **M** | | |
| Maintainability | 7.2.7 | 29 |
| Mandell Armor CUTLASS | 8.1.12 | 58 |
| Manufacturers of active barriers | A.4 | 83 |
| Manufacturers of passive barriers | A.5 | 84 |
| Maximum event | D.3.1 | 94 |
| Methods of access control | 7.2.16 | 31 |
| Movable barrier systems | 7.1.4 | 27 |

INDEX


| | Paragraph | Page |
|---|---|---|
| **N** | | |
| Nasatka maximum security barrier (NMSB)..... | 8.1.6 | 46 |
| Non-Government publications ..... | 2.3 | 3 |
| Non-repairable ..... | D.2.2 | 93 |
| **O** | | |
| OMNISEC Defender bollard..... | 8.1.7 | 51 |
| OMNISEC Magnum vehicle barrier..... | 8.1.8 | 53 |
| OMNISEC Portapungi ..... | 8.1.9 | 55 |
| OMNISEC SEMA-4 high impact crash beam..... | 8.1.10 | 57 |
| Operational cycle ..... | 7.2.15 | 31 |
| Operator training..... | 7.2.13 | 30 |
| **Options** | 7.2.14 | 31 |
| Order of precedence..... | 2.4 | 3 |
| Other Government documents, drawings, and publications .. | 2.2.2 | 2 |
| **P** | | |
| Passive barrier systems ..... | 7.1.2 | 27 |
| Passive barrier systems ..... | 8.2 | 59 |
| Performance considerations ..... | 5.3.2 | 11 |
| Performance data for active barriers..... | E.3.1 | 114 |
| Performance data for passive barriers..... | E.4.1 | 116 |
| Physical security protection plan ..... | 6.3 | 14 |
| Plastic barrier systems..... | 8.2.12 | 80 |
| Possible collapse..... | D.2.1 | 93 |
| Pressure effects on structures and glazing..... | D.4.4 | 102 |

INDEX


| | Paragraph | Page |
|---|---|---|
| **Q** | | |
| Quickly repairable | D.2.5 | 94 |
| **R** | | |
| Range of threats | D.3 | 94 |
| Reinforced concrete inverted “T” walls | 8.2.11 | 79 |
| Reliability | 7.2.6 | 29 |
| Repairable | D.2.4 | 94 |
| **S** | | |
| Safety | 7.2.4 | 28 |
| Scope | 1.1 | 1 |
| **Security** | 7.2.5 | 29 |
| Selection and design issues | 4.2 | 5 |
| Selection process summary | 5.4 | 11 |
| Shock wave | D.4.1.1 | 96 |
| Site modification alternatives | 5.2.4 | 9 |
| **Site survey** | 6.2 | 12 |
| Specifications, standards, and handbooks | 2.2.1 | 2 |
| Standoff distance | 5.2.5 | 10 |
| Standoff distance selection process | 5.2 | 6 |
| Steel cable barriers | 8.2.9 | 70 |
| Steel cable-reinforced chain link fencing | 8.2.10 | 70 |
| Structural hardening | 5.2.5.1 | 10 |
| System continuity | 5.3.2 | 11 |

INDEX


| | Paragraph | Page |
|---|---|---|
| **T** | | |
| Tire shredders | 8.2.7 | 68 |
| TYMETAL fortified impact gate system | 8.1.11 | 58 |
| **V** | | |
| Vehicle barrier performance | 8.3 | 81 |
| Vehicle barrier selection | 5.3 | 11 |
| Vehicle barrier selection checklist | 7.5 | 34 |
| Vehicle barrier types | 7.1 | 27 |
| Vehicle kinetic energy | 6.5 | 25 |


CUSTODIAN:
NAVY – YD2

PREPARING ACTIVITY:
NAVY – YD2

PROJECT NO.
FACR-5003

**STANDARDIZATION DOCUMENT IMPROVEMENT PROPOSAL**

INSTRUCTIONS

1. The preparing activity must complete blocks 1, 2, 3, and 8. In block 1, both the document number and revision letter should be given.

2. The submitter of this form must complete blocks 4, 5, 6, and 7.

3. The preparing activity must provide a reply within 30 days from receipt of the form.

NOTE: This form may not be used to request copies of documents, nor to request waivers, or clarification of requirements on current contracts. Comments submitted on this form do not constitute or imply authorization to waive any portion of the referenced document(s) or to amend contractual requirements.

| I RECOMMEND A CHANGE: | 1. DOCUMENT NUMBER | 2. DOCUMENT DATE *(YYMMDD)* |
|---|---|---|
| | MIL-HDBK-1013/14 | 990201 |

3. DOCUMENT TITLE : Selection and Application of Vehicle Barriers

4. NATURE OF CHANGE *(identify paragraph number and include proposed rewrite, if possible. Attach extra sheets as needed.)*

5. REASON FOR RECOMMENDATION

6. SUBMITTER

| a. NAME *(Last, First, Middle Initial)* | b. ORGANIZATION | |
|---|---|---|
| c. ADDRESS *(Include Zip Code)* | d. TELEPHONE *(Include Area Code)*<br>(1) Commercial<br>(2) DSN<br>*(If applicable)* | 7. DATE SUBMITTED:<br>*(YYMMDD)* |

8. PREPARING ACTIVITY

| a. NAME | b. TELEPHONE (*Include Area Code*) | |
|---|---|---|
| COMMANDER<br>NAVAL FACILITIES ENGINEERING COMMAND<br>ATTN CRITERIA OFFICE | (1) Commercial<br>(757) 322-4208 | (2) DSN<br>262-4208 |
| c. ADDRESS *(Include Zip Code)*<br>1510 GILBERT STREET<br>NORFOLK, VA 23511-2699 | **IF YOU DO NOT RECEIVE A REPLY WITHIN 45 DAYS, CONTACT:**<br>Defense Quality and Standardization Office<br>5203 Leesburg Pike, Suite 1403, Falls Church, VA 22041-3466<br>Telephone (703) 756-2340 DSN 289-2340 | |