SITE CHARACTERIZATION AND ANALYSIS PENETROMETER SYSTEM (SCAPS)

A Case Study of Cost and Time Savings Vs Conventional Site Characterization Techniques

SCAPS Program Manager
Department of the Navy
Naval Facilities Engineering Service Center
1100 23rd Avenue, Mail Stop 413DH
Port Hueneme, CA 93043-4370

EXECUTIVE SUMMARY

A Navy Site Characterization and Analysis Penetrometer System (SCAPS) performed an environmental subsurface screening investigation at a 4.5 acre petroleum contaminated site. The same site was studied 2 years earlier by the conventional site characterization method of boring, collecting samples at depth, and analyzing the samples at an off-site laboratory. The SCAPS laser induced fluorescence (LIF) technology allowed real-time, in-situ subsurface screening, and the results were consistent with the previous findings.

SCAPS examined almost 3 times the investigation depths, at twice as many locations compared with the earlier traditional approach. The SCAPS investigation effort, when corrected to encompass the entire scope of the conventional site characterization project, cost about 60% of the conventional site study cost. The field duration time was about equal. LIF results agreed well with the earlier study and laboratory sample analyses and provided a more complete characterization of the subsurface contaminant distribution. The traditional study underestimated the extent of the distribution because of its relatively coarse sampling.

BACKGROUND

SCAPS Introduction

The Site Characterization and Analysis Penetrometer System (SCAPS) is an innovative technology for real time, in-situ environmental site screening for petroleum hydrocarbon contaminated soils. SCAPS utilizes laser induced fluorescence (LIF) technology to detect polynuclear aromatic hydrocarbon (PAH) compounds resident in petroleum contaminated soils. The laser energy excites these compounds, causing them to fluoresce. This application of LIF technology resulted from a joint Navy, Army and Air Force (Tri-Services) program to address the costly, time consuming, and iterative nature of conventional contaminant plume delineation.

The LIF technology is deployed with standard cone penetrometer testing (CPT) equipment and techniques. SCAPS is designed around a commercially available, 6-wheel drive, 20 ton CPT truck. The road dimensions are approximately 38 feet long, 8 feet wide, and 13 feet high. Figure 1 shows the basic external configuration of SCAPS. In addition to features of a typical CPT truck, SCAPS incorporates an integrated LIF/CPT probe, segregated personnel compartments, LIF system, remote decontamination system, and through-probe grout injection system.

The SCAPS probe conforms to industry standard CPT specifications. In addition to the standard CPT measurements, probe tip bearing force and sleeve friction force, LIF instrumentation is integrated to add soil contamination data as a function of depth. The probe is hydraulically pushed into the ground, displacing soil as it advances. A diagram of probe deployment is shown in Figure 2. The probe is approximately 1.6 inches in

diameter and can investigate depths to 150 feet. The push mechanism advances the probe at a rate of approximately 3 feet per minute.

The source laser is located in the instrumentation/computer compartment, see Figure 1. Laser energy is transmitted via fiber optic cables within the umbilical cable to the dime sized, LIF window mounted in the side of the probe, see Figure 2. The laser energy is delivered to the soil as the probe is advanced. Contaminant fluorescent signals are returned through the same LIF window and transmitted through fiber optic cables to analysis instruments in the vehicle.

SCAPS data output for one investigation hole, or push, is shown in Figure 3. All data is displayed real-time as a function of depth as the probe is advanced. The cone (bearing) pressure (column 1) and sleeve friction (column 2) values are the independent variables for determining the soil classification value (column 3), which is standard CPT information. Soil classification values represent various soil types. These physical soil properties are measured at approximately 1 inch intervals. The wavelength at peak (column 4) value provides spectral information about the soil fluorescent signal and is a function of fuel type or natural mineral (background) fluorescence. The raw fluorescence (column 5) intensity value is proportional to the contaminant concentration. This intensity value is considered a relative value at each site, and in general, the higher the fluorescence, the greater the PAH concentration in the soil. SCAPS gathers and processes fluorescing signals every 2 inches. All data is stored electronically in a PC compatible format for further processing or creation of subsurface contaminant models.

During retraction of the probe, the SCAPS decontamination and grouting systems are activated. The various components are shown in Figure 1 and Figure 2. The decontamination system ensures all hardware retrieved is cleaned prior to worker contact. Fresh water is stored onboard and spent decontamination water is captured by a drum on the rear deck. Since CPT is a displacement technique, no soil is removed from the site. The only investigative derived waste (IDW) is the decontamination waste water. The grouting system injects a cement/bentonite grout into the cavity formed by the retracting probe. This ensures a bottom-up style grouting seal of the investigation hole.

The Navy operates 3 SCAPS vehicles. One supports basic research and development of new sensors. Additional SCAPS research continues under the Tri-Services program. Future real-time, in-situ sensors include a miniaturized video microscope, metals, and chlorinated solvents probe. Two production SCAPS trucks serve the needs of the Navy and are based in Jacksonville, FL and San Diego, CA.

Regulatory Acceptance

The SCAPS process, LIF data combined with a relatively few soil samples, has been examined by regulatory agencies as a site screening technology. The review process included participating in field demonstrations, and conducting independent verification of the process, data, and results.

SCAPS has been verified by the United States Environmental Protection Agency (US-EPA) through the Environmental Technology Verification Program. In addition to verifying the technical claims of SCAPS, US-EPA concluded that SCAPS is quicker and less expensive than conventional drilling and sampling site characterization efforts.

The California EPA's Department of Toxic Substance Control (DTSC) certified SCAPS as a technology for site screening and issued certification number 96-01-021 to the Navy.

The Cone Penetrometer Site Characterization Technology Task Group, established by the Interstate Technology and Regulatory Cooperation, has accepted the technical merits of SCAPS technology. The task group members, representing 7 states, obtained or seek to obtain acceptance of the technology within their respective states. Further, the task group recommends that the ITRC membership states consider accepting SCAPS for environmental site screening.

SCAPS Process for Environmental Site Investigation

SCAPS is typically deployed by a four-person crew. This includes 2 push room technicians, 1 instrumentation/computer engineer, and 1 project manager. Prior to field work, permits, a health and safety plan, quality control project plan, spill contingency plan and flexible work plan are prepared. During a field investigation, SCAPS push locations are based on knowledge gained from previous SCAPS push locations. Unlike conventional technologies, the investigator immediately gains knowledge (soil classification data and contaminant distribution) of the subsurface as the probe is advanced into the ground. A flexible work plan allows SCAPS to chase a contaminant plume in three dimensions as required. Soil samples are retrieved with SCAPS to confirm LIF data. Approximately one soil sample is retrieved per 10 LIF pushes, and usually a minimum of 3 samples are retrieved per site. Samples are retrieved from a location approximately 1 foot radially from the LIF push location, at the target depth. Investigation push locations are checked for buried obstacles by using ground penetrating radar and magnetic/pipe locators. On average, one complete investigation push, including utility clearance and hole grouting, is accomplished per hour. Typically, 9 or 10 investigation pushes are completed in a field day. An exit report is issued at completion of the field work, and a final report is provided to the customer.

SCAPS Sample Retrieval and Well Installation Tools

SCAPS utilizes commercially available CPT tools to retrieve soil, water, and gas samples from depth. Laboratory results from these samples confirm LIF results and provide complete characterization as required. SCAPS can install direct push, small diameter wells (3/4 and 2 inch wells) for access to groundwater or long term monitoring.

Commercialization

The LIF technology has been successfully commercialized and is available from the private sector. From the beginning, the Tri-Services SCAPS program recognized the importance and value of commercializing this technology. Commercial partners entered into cooperative research and development agreements with the government in order to allow broad access to the technology. Combined with licensing agreements, these commercial partners offer LIF technology and services commercially.

CASE STUDY

Case Study Site

This site was chosen for this study because of the availability of existing information. The site was first characterized in the Summer of 1994 by a Navy contractor using traditional boring, sampling, and laboratory analysis methods to assess the subsurface conditions. SCAPS characterized the same site in the Summer of 1996. Thus, data quality, cost, effort, and time elements to characterize the site can be compared with relative equality. Needless to say, it is quite rare for the same site to be characterized by both methods and this provided a unique opportunity to compare the 2 technologies. The site area, as characterized by both methods, is approximately 4.5 acres, in roughly a rectangular shape.

Site History

The site is on Navy owned property and served as a petroleum supply and distribution center since 1939. At its maximum capacity, the facility handled and stored 1.8 million barrels of petroleum product. The types of products handled were quite diverse and include Navy special fuel oil (#6 bunker), marine diesel (#2 fuel oil), jet fuels #4, 5, and 8, marine diesel lubrication oil (#9250), steam turbine lubrication oil (#2190), and aviation gasoline. In 1982, the Navy installed new piping lines secured within a concrete tunnel system. This replaced an older underground system , which was drained of product and abandoned in place.

The site lies between a fuel delivery pier and a tank farm. It is the central transfer point for virtually all of the petroleum products stored at the facility. The study area consists of an underground piping network, pumping facilities, maintenance shops, administration buildings, and a water treatment facility.

Site Geology

In general, the site is covered with an asphalt surface on top of 2 feet of fill gravel. As determined by SCAPS CPT data, subsurface soils consist of sand with some interbedded gravel and silt and relatively rarely with clay. These sandy soils appear to be relatively

continuous and uniform throughout the site. Drill logs from the traditional investigation confirm the same general subsurface lithology. Groundwater is between 5 to 15 feet below ground surface across the site.

Traditional Characterization - Field Efforts

During the conventional characterization of the site, 24 soil borings were completed. The maximum investigation depth was 26 feet, minimum depth was 4 feet, average depth was 12.9 feet, and the cumulative boring depth was 310 feet for the entire project. The 10 inch diameter boreholes were created with a hollow stem auger, and soil samples were retrieved with a split barrel sampler. Soil samples were collected continuously for visual inspection of contamination and characterization of soil types. Soil samples were field screened for total organic vapors using a photoionization detector (PID) and recorded on the boring logs. Soil samples were selected for chemical analysis based on visual indication of contamination, elevated PID results, or change in soil type or condition.

IDW soils were collected in containers. Equipment was decontaminated with high temperature pressurized steam. An estimated 32 fifty-five gallon drums of IDW as soil and water were generated, handled and disposed during this investigation.

5 monitoring wells were constructed from 5 existing borings. The wells were developed and two groundwater sampling events were conducted. In addition, hydraulic conductivity testing, salinity measurements and tidal influence observations were conducted at each of the monitoring wells.

Traditional Characterization - Chemical Analysis

Investigators obtained over 100 soil samples and subjected the samples to a field screening for total organic vapors using a PID. As a result of the PID analyses, 50 of those samples representing 23 of 24 boreholes were submitted for laboratory analysis. The laboratory performed a total petroleum hydrocarbons - hydrocarbon identification (TPH-HCID) screening test. Samples with positive results from this TPH-HCID test were subjected to further laboratory testing: total petroleum hydrocarbons - gasoline (TPH-g), total petroleum hydrocarbons - diesel (TPH-d), or total petroleum hydrocarbons - heavy oil (TPH-418.1). 16 of the 50 samples were subjected to the TPH-g, TPH-d, or TPH-418.1 chemical analysis tests; these samples represented 12 of 24 boreholes. Thus, 34 samples were analyzed and found to be essentially clean. Benzene, toluene, ethyl benzene, and xylene (BTEX) and lead concentrations in the soil were also examined. BTEX and lead concentrations in all 50 samples did not exceed clean-up levels.

Gasoline concentrations from 10 soil samples from 9 boreholes exceeded the 100 part per million (ppm) clean up goal. The gasoline concentrations ranged from 24 (estimated) ppm to 6,600 ppm. Diesel concentrations from 10 soil samples representing 9 boreholes exceeded the 200 ppm clean up level. The diesel concentration ranged from 59 ppm to 9,400 (estimated) ppm. Heavy oil concentrations from 8 soil samples representing 7

boreholes exceeded the clean up goal of 200 ppm. Heavy oil concentrations ranged from 170 ppm to 9,800 ppm.

A plan view map of the site and soil sample results are presented in Figure 4.

Traditional Characterization - Results Summary

The final report summarizes the subsurface extent of petroleum hydrocarbon as follows:

- Contamination limited to the portion of the study area between buildings 1, 12, and 64. Contamination was detected West and North of building 1.
- The vertical extent was limited to the top 8 feet, except at 4 locations, where contaminants were detected to 12 feet below ground surface.
- Generally, TPH results in soils at concentration exceeding clean-up levels were not pervasive.
- Contaminated soil volumes exceeding clean-up levels appeared discrete.

SCAPS Characterization Field Efforts and Chemical Analyses of Samples

51 SCAPS LIF pushes were completed at this site. 33 of the 51 investigation locations were interpreted as contaminated with petroleum products. The maximum investigation depth was 28.8 feet and the minimum investigation depth was 9.3 feet. The average investigation depth was 17.6 feet, and total cumulative investigation depth was 898 feet.

The SCAPS process includes retrieval and laboratory analysis of discrete soil samples to confirm positive and negative LIF results. As part of this site characterization, 7 soil samples were processed from 6 different investigation holes. Sample locations were determined by considering LIF response intensities and spectral signatures. Natural soils may fluoresce as a result of LIF, but the spectral characteristics of this signal distinguish it from the spectral characteristics of fluorescing petroleum compounds.

5 of the 7 samples were highly suspected as contaminated because all exhibited both elevated fluorescence and characteristic spectral qualities associated with PAH response to LIF. One sample was highly suspected as clean. This sample was retrieved from an area of somewhat high LIF intensity response, with respect to typical site background values. However, its spectral qualities were very similar to background characteristics. The remaining sample was retrieved from the suspected bottom extent of contamination and expected to be clean or contaminated at a low concentration.

Figure 3 shows the SCAPS data output for one investigation push where 2 soil samples were retrieved. The depth location and laboratory analysis results for the discrete soil samples are superimposed on the raw fluorescence plot, column 5. The sample gathered from approximately 8.5 to 9.0 feet was suspected to be contaminated because of the elevated raw fluorescence value and a decrease in peak wavelength (column 4) to about

450 nanometers. Laboratory data confirmed contamination as jet fuel #5 (JP-5). The sample retrieved at 15.0 to 15.5 feet was suspected to be the bottom extent of contamination, and laboratory data confirmed the investigator's supposition.

All 7 samples were analyzed for TPH-Diesel (TPH-D), and TPH-Jet Fuel #5 (TPH-JP5) by EPA method 8015 (modified). One sample was analyzed for total recoverable petroleum hydrocarbons (TRPH) by EPA method 418.1. Results comparing soil LIF response to laboratory analyses are summarized in Table 1. A plan view of the site summarizing SCAPS LIF and corresponding laboratory sample analyses results is shown in Figure 5.

Location	**Maximum LIF Response (counts)**	**LIF Response Interval (feet)**	**Sample Depth**	**Laboratory Results (mg/kg)**
F-Pier 07	5,440	11.9 to 14.8	15.0	TPH-D = 240 TPH-JP5 < 10
F-Pier 09	13,094	No spectral indication of contamination	12.0	TPH-D < 10 TPH-JP5 < 10
F-Pier 19	260,076	4.7 to 9.2	8.0	TPH-D < 10 TPH-JP5 = 2,600
F-Pier 22	217,518	3.1 to 6.7	6.0	TPH-D = 31,000 TPH-5 < 10
F-Pier 38	140,549	3.2 to 8.2	4.5	TPH-D = 6,600 TPH-JP5 < 10 TRPH = 7,000
F-Pier 42	208,154	6.1 to 16.2	9.0	TPH-D < 10 TPH-JP5 = 4,000
		Bottom of contamination	15.5	TPH-D < 10 TPH-JP5 < 10

Table 1 - SCAPS LIF Results and Laboratory Analysis for Soil Samples

As IDW, approximately 5 fifty-five gallon drums of decontamination waste water were generated, collected and disposed into the base's oily water treatment plant.

SCAPS Characterization - Results Summary

The spectral content of the LIF signal from petroleum impacted zones occurred at 3 distinct peak wavelengths, with correspondingly distinct spectral shapes. This suggests three different petroleum products were present at the site. Combined with laboratory data, these products were assumed to be diesel, JP-5 and waste oil. The diesel and JP-5 contamination was observed over a relatively large area, and may form an elongated plume trending southwest to northeast from buildings 12 to 194. The waste oil

contamination was confined to a relatively small area around waste oil storage tanks 115 and 116.

Comparison of Traditional and SCAPS Site Characterization Efforts

A comparison between a traditional and SCAPS characterization at the same site are summarized in Table 2.

Element	**Traditional**	**SCAPS**
Total Project Cost	$188,000	$91,500
Investigation Locations	24 each	51 each
Field Time (Soil Only)	6[a] days	7 days
Cumulative Investigation Depth	310 feet	898 feet
Average Investigation depth	12.9 feet	17.6 feet
Drums of IDW Generated	32 (estimated) each	5 each
Soil Samples Field Screened	100 each, ex-situ w/PID	5388 each, in-situ w/LIF
Soil Samples Analyzed	50 each	7 each
Soil Samples w/ Unexpected Results	34 each	0[b] each
Lab TPH Soil Tests	66 each	7 each
Lab BTEX/Lead Soil Tests	42	0[c] each
Wells Installed	5 each	0[d] each
Water Samples Analyzed	30	0[e] each
Salinity Measurements	5 each	0[e] each
Hydraulic Conductivity Test	1 each	0 each
Tidal Influence Observations	1 each	0[f] each
Iterations Required for Characterization	1 each	1 each
Complete Project Documentation	Yes	Yes

Table 2 - Comparison of Traditional and SCAPS Characterization Efforts

Notes:

a - Field time determined from drill logs and may not include field soil screening time.

b - SCAPS retrieves expected clean and contaminated soil samples to confirm LIF results, and to provide reportable contaminant concentration values.

c - Not requested. Test could have been performed for incremental lab analysis cost using existing SCAPS soil samples.

Notes: (continued)

d - Not requested. SCAPS can install direct push, small diameter wells. Estimated cost for 5 wells (labor and material) is $2,000. Expected field time is a half day.

e - Not requested. Water samples can be retrieved from SCAPS installed direct push wells, or with CPT water sampling tool. Test could have been performed for incremental lab analysis cost.

f - Not requested. Test could have been performed at incremental field cost using SCAPS direct push wells.

Discussion of Comparison Between Traditional and SCAPS Processes

The SCAPS site characterization effort cost about 50% less than the previous characterization method using a traditional boring, sampling, and laboratory analysis protocol. SCAPS investigated over twice as many locations compared to the previous investigation. Both investigations were completed in roughly the same 4.5 acre area; thus the areal density of the SCAPS investigation is about twice that of the previous investigation. The average depth of the SCAPS investigation was about 4.7 feet deeper than the traditional characterization investigation.

In general, SCAPS LIF results concur with the previous traditional study results, as indicated by Figure 4 and Figure 5. Previously confirmed contaminated areas corresponded with elevated LIF intensities and characteristic LIF spectral shapes. However, the relatively coarse screening resolution typical of traditional characterization studies may have missed areas of high contamination. Of the 24 boring investigations performed previously, 11 were relatively close to SCAPS investigation locations. 26 samples were collected from these borings. Only 8 of 26 traditional samples were collected from areas with high fluorescence responses. 12 of the 26 samples missed significantly contaminated zones as determined by SCAPS. And the remaining 6 samples were collected from contaminated zones, but not at depths representing the highest contamination concentrations, as determined by SCAPS LIF responses. Thus, the traditional characterization survey tended to underestimate the subsurface contaminant conditions. Inaccurate information of the subsurface condition can lead to poor decisions or ineffective remediation designs.

Although the data provided by both techniques were consistent, the conclusions from the two investigations differ. Perhaps the screening resolution between the methods contributed to this difference. A comparative discussion of the results and interpretations is beyond the scope of this paper. In general, the traditional site characterization concluded that contamination was discrete and not pervasive. SCAPS data, because of the higher density investigation locations and very large amounts of in-situ LIF soil analyses, suggested a continuous contamination plume(s) under the site. Note that plume visualization is subjective and subsurface site conditions may have changed during the 2 years between investigations.

The total project cost of the initial study included many elements not included in the SCAPS investigation. SCAPS investigated soil contamination only, specifically petroleum products. The previous study included costs for analyzing soil samples for BTEX and lead, installing and developing monitoring wells, analyzing groundwater quality, conducting a hydraulic conductivity test, and observing tidal effects on the site groundwater conditions. The estimated costs for these additional laboratory analyses and services are summarized in Table 3. Thus, an equivalent SCAPS project cost encompassing the entire effort of the initial study is estimated to be $110,550. This corrected SCAPS project cost is roughly 60% of the conventional characterization cost.

Element	Quantity	Total Cost
Soil Test for BTEX	42	$2,500
Soil Test for Lead	42	$1,000
Water Test for BTEX	10	$600
Water Test for TPH	10	$700
Water Test for Lead	10	$250
Water Test for Salinity	10	$500
Well Installation and Development	5	$10,000
Water Sample Retrieval, Hydraulic Conductivity Test, Tidal Observations	as required	$3,500
Total		$19,050

Table 3 - Additional Services & Cost Included in the Conventional Characterization

SCAPS can install direct push, small diameter wells for access to groundwater or to study tidal influence on groundwater. Material and labor cost for SCAPS to install 5 direct push monitoring wells (to 20 feet below ground surface) is about $2000, and will require half a day to complete. Well development, sampling, and laboratory analysis would be the incremental cost for each service. Likewise, groundwater samples can be retrieved without the use of a well by deploying a CPT water sampler. 5 samples could probably be retrieved in a half day with this method. The incremental labor cost to obtain the samples is estimated at $1500. The manufacturer of the direct push wells does not recommend conducting hydraulic conductivity tests with these wells to obtain absolute values. However, these wells can provide relative hydraulic conductivity values across a site.

IDW was generated by both characterization techniques. SCAPS generated 5 drums (55 gallon capacity per drum) of decontamination waste water, which was disposed into the base's oily water treatment plant. The decontamination waste water from SCAPS has been sampled from numerous sites and has not been considered hazardous. The dilution that occurs during the decontamination process and the mechanical scraping along the

soil as the probe is retracted contributes to relatively low contaminant concentrations in the waste water. The traditional characterization effort generated an estimated 32 drums of soil drill cuttings and decontamination waste water. The drill cuttings would require sampling and/or disposal as hazardous waste. Not only is this a project cost, it can present a liability problem.

The traditional investigation method characterized this site in 1 visit with 1 sample gathering event. Most likely, this is not typical and sites commonly require 3 iterations to adequately characterize the subsurface in all three dimensions. Upon encountering a new site, the investigator has no preconceived concept of the subsurface conditions. Knowledge of the site is gained through an iterative process. Each sample gathering event is followed by a laboratory analysis of the samples and adds to the knowledge of the subsurface. The lab analysis can take many weeks. The results determine the success of adequate site characterization. However, direct reading, real time soil analyses results, as provided by SCAPS, helps the investigator make decisions in the field, without waiting for sample results. The LIF results, although only qualified as site screening method, provides the investigator with a relatively good concept of contamination distribution as the investigation is in progress. Samples used to quantify contaminant concentrations can be retrieved only from areas of interest, whether clean or contaminated. SCAPS typically can characterize a site in 1 visit.

Additional factors to consider, which are not fiscally quantifiable, are the inherent safety of the SCAPS process, reduced health liability associated with handling few soil samples, and reduced liability of handling and disposing of IDW as hazardous waste. The SCAPS vehicle and process is designed to minimize worker exposure to contaminants. Workers handle equipment after it has passed through the decontamination process and workers do not contact contaminated soils, except during sample retrieval. Over 100 soil samples were handled by the field crew during the field screening portion of the conventional site study. The SCAPS crew handled only 7 samples at this site. CPT methods for sample retrieval remove only the sample volume from the subsurface. Standard drilling operations bring potentially contaminated soil to the surface. This could expose personnel or the environment to hazardous conditions. Any contaminated soils generated as IDW would most likely be considered hazardous waste and applicable regulations and liability become a consideration.

CONCLUSION

The deployment of SCAPS LIF to characterize a petroleum impacted site has been demonstrated to save time, money, and provide reliable site screening data. When compared against the traditional boring, sampling and laboratory analysis method of site characterization, SCAPS investigated twice as many areal locations and almost triple the cumulative investigation depth compared with the conventional approach. Both characterization techniques investigated the same 4.5 acre site in approximately the same time. The traditional approach field screened 100 samples ex-situ with a PID, while SCAPS screened 5388 samples in-situ using LIF technology. Only 16 of 50 samples submitted for laboratory analysis using the conventional approach were contaminated. Using SCAPS LIF data, the investigator was able to choose subsurface soil sample locations to optimize the investigation, thus reducing the amount of samples retrieved and processed for laboratory analyses. As a result, 7 samples were submitted as part of the SCAPS process, and all samples results agreed with LIF data. After the investigation, the traditional study generated an estimated 32 drums of soil and water as IDW. SCAPS only generated 5 drums of decontamination waste water and this was disposed into a nearby oily water treatment plant.

The traditional study included 5 monitoring well installations, laboratory tests for BTEX and lead in both soil and water matrices, groundwater salinity measurements, a tidal observation study, and hydraulic conductivity study. These costs are not reflected in the SCAPS costs and would add an additional $20,000 to the SCAPS project. The adjusted or equivalent SCAPS costs incorporating these elements into the SCAPS study would be approximately $110,550, which is about 60% of the cost of the conventional characterization effort.

This study does not address non-quantifiable costs. The traditional characterization adequately studied this site in 1 visit, which is uncommon since most sites require multiple visits to fully characterize. Speculations on cost or effort for additional iterations are not calculated. Other non-quantifiable advantages of SCAPS include the enhanced personnel safety inherent in the SCAPS process and reduced liability associated with reduced soil sample and IDW handling and disposal. Thus, the cost savings discussed in this case study are considered relatively conservative.

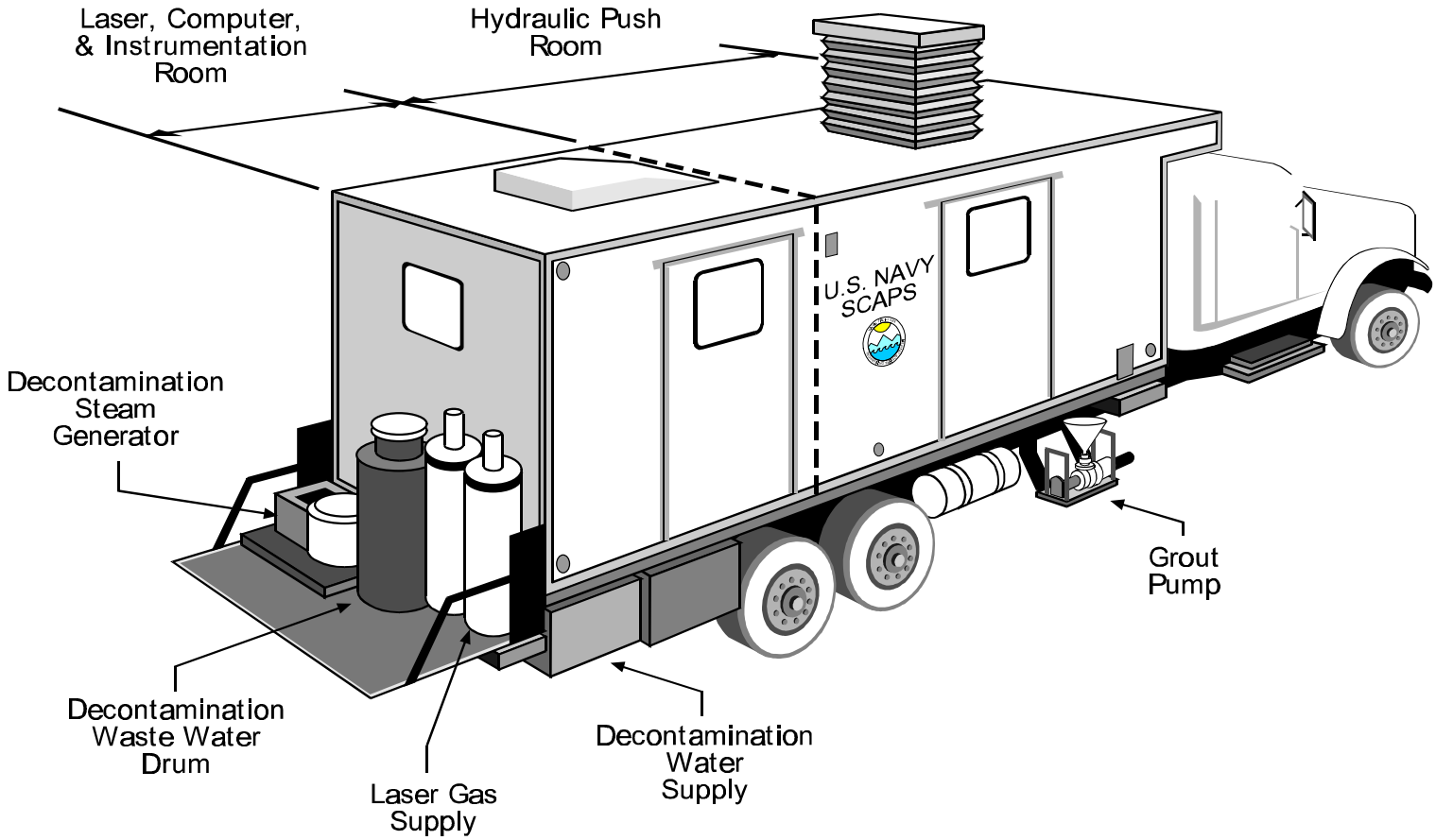

Figure 1. Navy SCAPS external configuration.

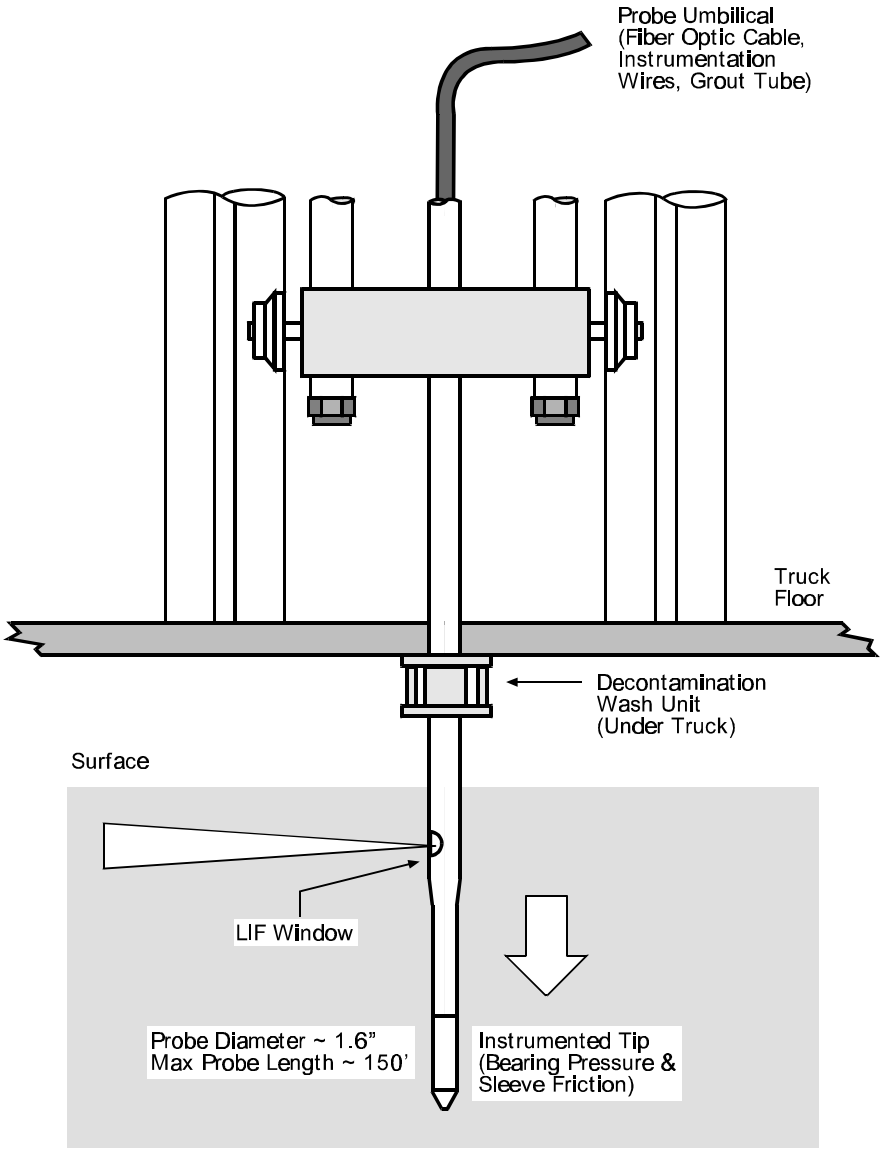

Figure 2. SCAPS/LIF probe deployment.

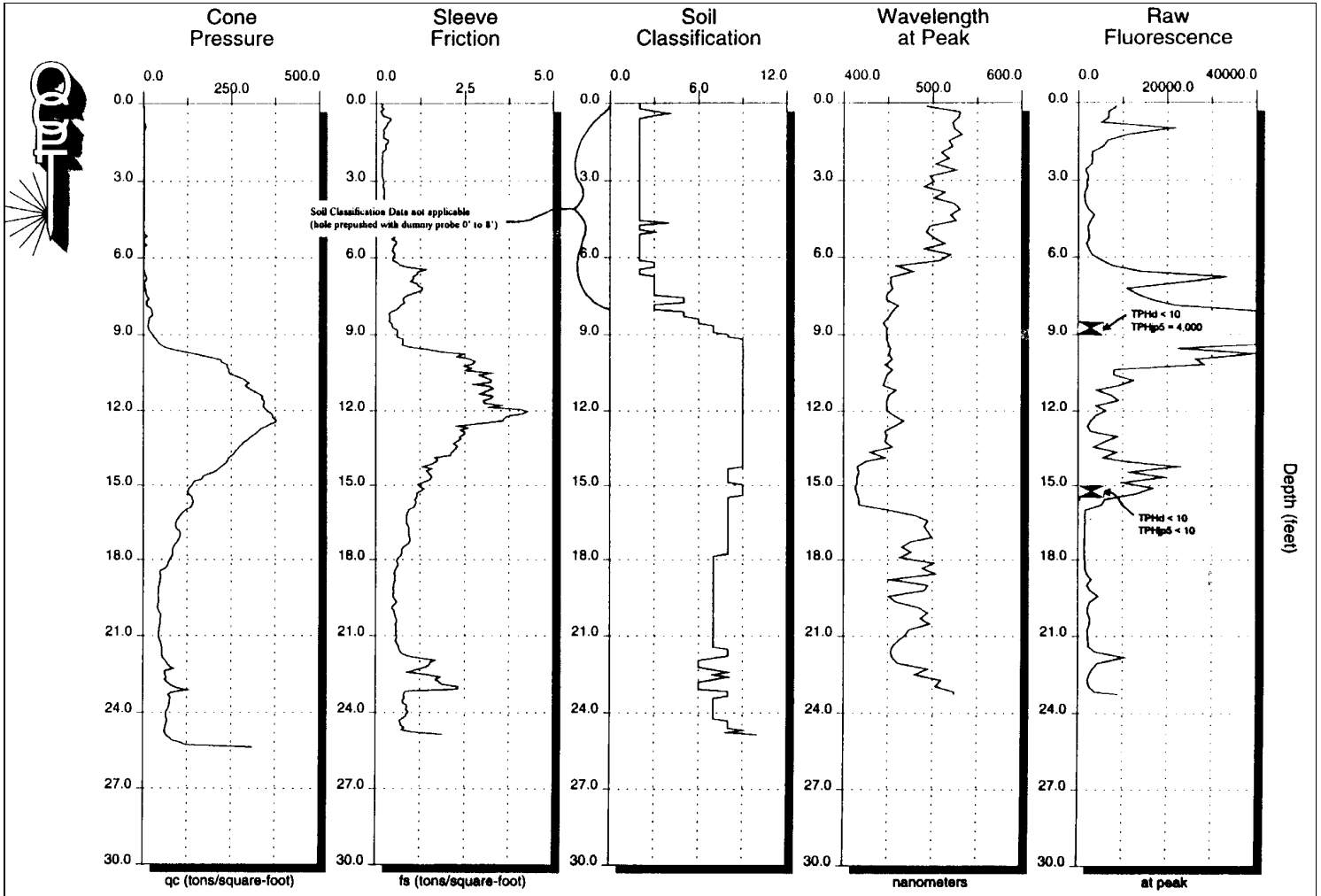

Time: 08:37:14
Date: 09-20-1996
Version: 1.0

Figure 3

Actual SCAPS Investigation Push Log

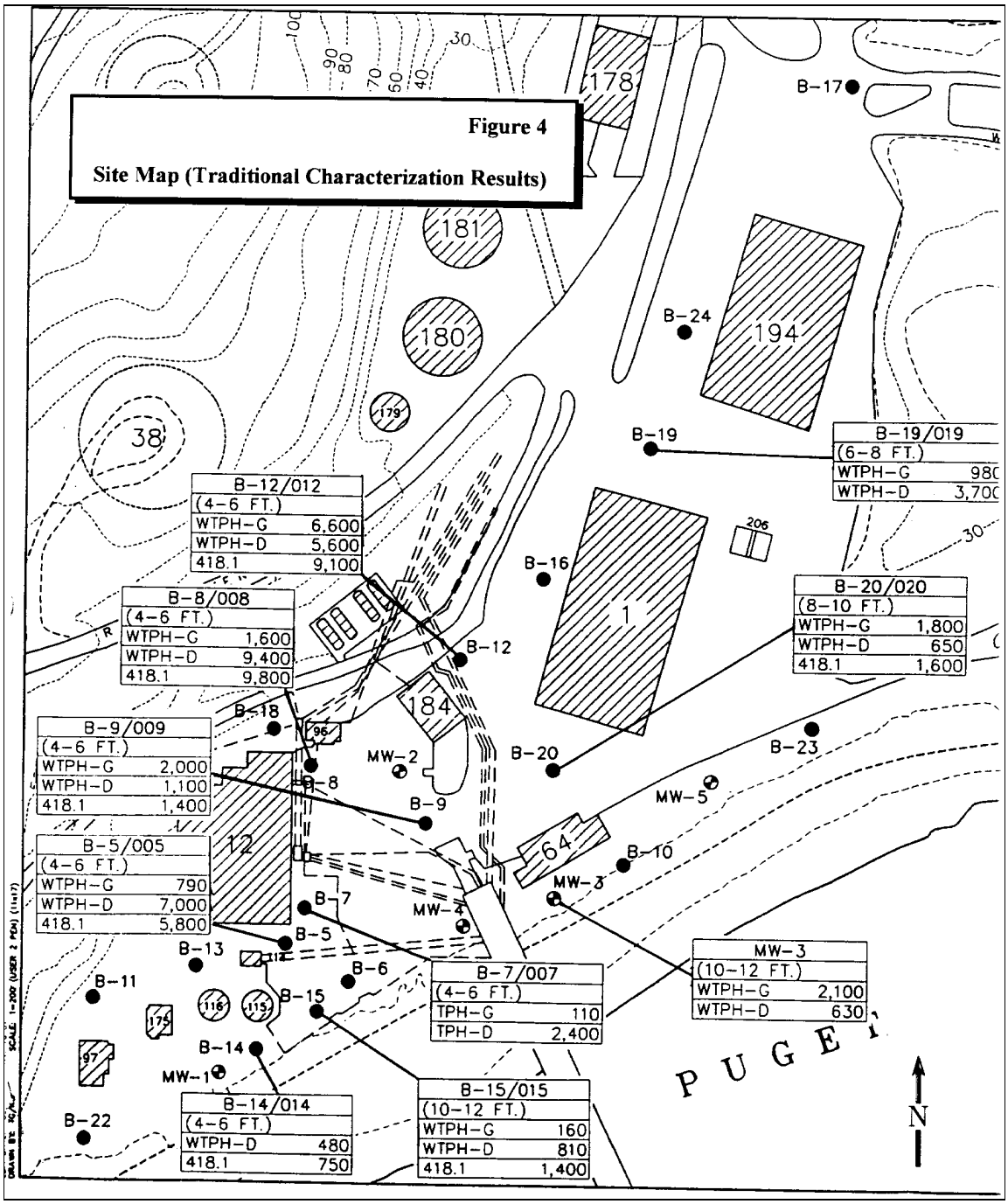

Figure 4

Site Map (Traditional Characterization Results)

Figure 5

Site Map (SCAPS Characterization Results)

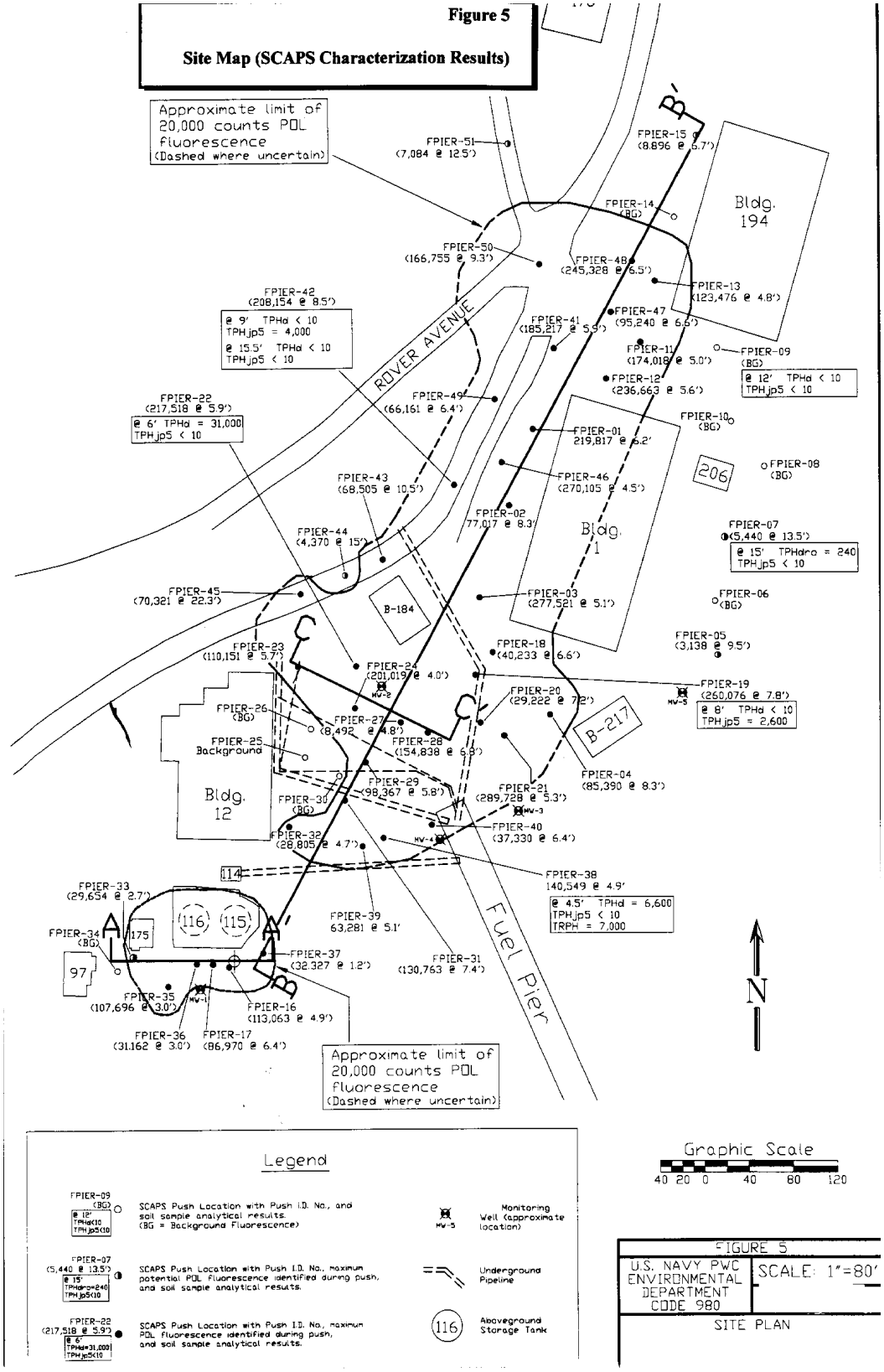

FIGURE 5	
U.S. NAVY PWC ENVIRONMENTAL DEPARTMENT CODE 980	SCALE: 1"=80'
SITE PLAN	