Contract Number: _____ Crane Manufacturer: _____

Crane Capacity: _____ Crane Serial Number: _____

Drum Barrel Alignment Data Sheet

Equipment (check one): ☐ **Main Hoist Drive** ☐ **Aux Hoist Drive** ☐ **Other: _____**

Coupling Manufacturer	
Coupling Type/Size	
	Angular (inches)
Manufacturer's Allowable Misalignment	

Alignment Method (check one): ☐ **Straight Edge** ☐ **Laser**

Straight Edge Alignment

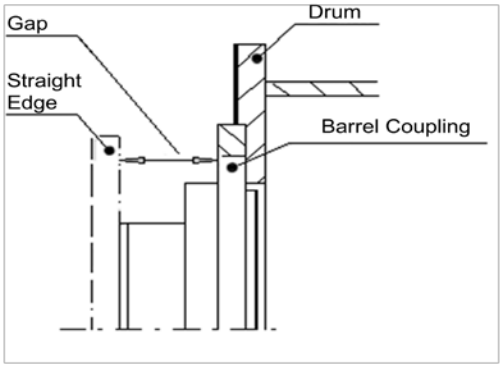

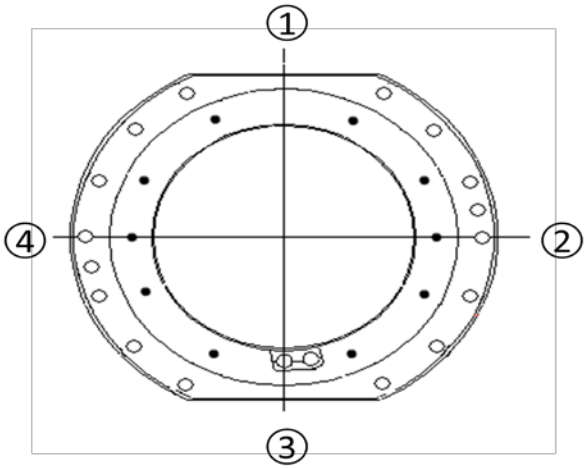

Position:	1	2	3	4	Δ
Measurement at Gap:	_____	_____	_____	_____	_____

Note: Position 1 is always opposite of the wear indicator.

Laser Alignment

Horizontal Gap: _____ Vertical Gap: _____

Bolting Requirements

Coupling to Drum			**Coupling Halves**		
Number of Bolts	Bolt Size	Torque Value	Number of Bolts	Bolt Size	Torque Value

Pillow Block Torque Record			**Pillow Block Shimming Record**	
Bolt #	Bolt Size	Torque Value	Number of Shims	Total Shim Thickness
1				
2				

Alignment Verified by: _____ Date: _____