Submittal Guide

December 2010

Navy Crane Center
Norfolk Naval Shipyard
Bldg 491
Portsmouth, VA 23709
(757) 967-3803

Table of Contents

I. Introduction 1

A. Purpose 1
B. Scope 1

II. Description of Submittals 2

A. Schedules, Status Reports and CCRFs 2
i. Schedule with milestones 2
ii. Monthly status report 3
iii. CCRF and Cost Worksheet 4
B. Drawings 6
i. General Drawing Border with Title Block 7
ii. General Arrangement Drawings 7
iii. Electrical Drawings 8
iv. Mechanical Drawings 9
v. Structural Drawings 9
C. Product Data 10
i. Mechanical Product Data 10
ii. Electrical Product Data 11
iii. Structural Product Data 12
D. Design Data 12
i. Structural Calculations 12
ii. Mechanical Calculations 13
iii. Electrical Calculations 14
E. Test Reports 15
i. Hook and Nut Non-Destructive Test (NDT) Report 16
F. Certificates 17
i. W ire Rope Certificate 17
ii. Periodic Overload Testing Certificate 17
iii. Crane Runway Rail Certificate & Survey 17
iv. Hazardous Material Certificate 18
v. Loss of Power Test Certificate 18
vi. Coupling Alignment Certificate 18
vii. Hook Proof Test Certificate 18
viii. W elding Certifications 18
ix. Certificate of Design Review by Professional Engineer 19
x. Hoist Machinery Certificate 19
G. Manufacturer's Instructions 19
i. Crane Installation Plan 19
ii. Accident Prevention Plan (APP) 20
iii. Training Course Outline 33
H. Manufacturer's Field Reports 33
i. B rake Adjustment Report 33

ii. Shop Test Deficient Items List 33
iii. Operation and Maintenance Data 33
I. Closeout Submittals 34
i. Control System Parameter Record 34
ii. List of Parameters and Crane OEM's Approved Crane Range..... 34
iii. Frequency Allocation Application 35

III. Appendix – Examples I-1

A. Sample Schedule with milestones..... A-1
B. Monthly Status Report B-1
C. CCRF and Cost Worksheet..... C-1
D. General Drawing Border with Title Block..... D-1
E. General Arrangement Drawings E-1
i. General Arrangement.....E-2
ii. Trolley Arrangement.....E-4
F. Electrical Drawings.....F-1
G. Mechanical Drawings G-1
H. Structural Drawings H-1
I. Mechanical Product Data.....I-1
i. Brakes I-2
ii. Bearings I-6
iii. Couplings I-10
iv. Gearbox I-22
v. Packaged Hoist.....I-29
vi. Hook Block I-39
vii. Bum pers I-42
J. Electrical Product Data J-1
K. Structural Product Data..... K-1
i. End trucks K-2
ii. Patented Track K-4
L. Structural Calculations.....L-1
M. Mechanical Calculations..... M-1
i. Non-comme rcial items..... M-2
ii. Brakes M-18
iii. Couplings M-20
N. Electrical Calculations N-1
i. Motor..... N-2
ii. Overcurrent protection N-5
iii. Conduit fill N-7
iv. Protective device coordination study N-9
v. Lighting N-11
O. Hook & Nut Non-Destructive Test (NDT) Report O-1
P. W ire Rope Certificate P-1
Q. Periodic Overload Test Certificate..... Q-1
R. Crane Runway Rail Certificate & Survey..... R-1

S. Hazardous Material Certificate S-1
T. Loss of Power Certificate T-1
U. Coupling Alignments Certificate U-1
V. Hook Proof Test Certificate V-1
W. Welding Certification W-1
X. PE Design Review Certificate X-1
Y. Hoist Machinery Certificate Y-1
Z. Crane Installation Plan Z-1
AA. Accident Prevention Plan AA-1
BB. Training Course Outline BB-1
CC. Brake Adjustment Report CC-1
DD. Shop Test Deficient Items List DD-1
EE. Operation & Maintenance Data EE-1
FF. Control System Parameter Record FF-1
GG. List of Parameters and Crane OEM's Approved Crane Range GG-1
HH. Frequency Allocation Application HH-1

I. Introduction

A. Purpose

To provide guidance to contractors on the desired format and required content of submittals referenced in Navy Crane Center procurement contracts.

B. Scope

This guide is applicable to all Navy Crane Center contracts, whether specifically invoked or not.

II. Description of Submittals

This section lists and describes each of items required to be submitted by the crane contractor.

A. Schedules, Status Reports and CCRFs

These documents are provided at various times during the contract period as the need arises. Schedules and Status Reports are typically required to be provided at the Post-Award meeting and monthly thereafter for the duration of the contract delivery order. CCRF and Cost Worksheets are required when needed. Specific requirements for the timing of submission will be provided in the delivery order documentation.

i. Schedule with milestones

The schedule with milestone submittal is the contractor's post-award schedule which captures the major events during design, fabrication, installation and testing of the crane. At a minimum, the schedule shall include:

1. Post-Award Meeting
2. Design Submittals (100% & Final)
3. NCC Review (100% & Final)
4. Pre-Installation Conference
5. Shop Test
6. Crane Delivery
7. Crane Installation
8. Field Acceptance Testing
9. Crane Acceptance
10. Completion of Warranty

It is the contractor's responsibility to ensure that all required submittals are received in a timely fashion to support key milestone events. It is recommended that the contractor track the due dates of critical CDRLs on the project milestone schedule. Approval and/or acceptance of specific CDRLs are pre-requisites to initiating key project milestones. Critical CDRL items that have caused project schedules to slip include, but are not limited to:

1. Final Stamped Drawings
2. Hook & Nut NDT Certification
3. Runway Rail Survey & Certification
4. Contractor Shop Test Procedure
5. Lift, Installation & Handling Plan
6. Accident Prevention Plan

Please see Appendix A for a sample schedule including milestones.

ii. **Monthly status report**

The status report shall be in contractor's format. The first page of the report shall contain the following information:

1. Title/Identification of the system/component/program/project.
2. Period covered by the report.
3. Contract number.
4. Preparing activity or contractor's title.
5. Security classification, when required.
6. Distribution Statement.

The report shall contain the following items:

1. *Milestone/task status.* Include a brief statement of the overall project status, followed by the status of each milestone/task as defined by the contract. Address whether or not the project is on schedule; if not, describe the effort planned to meet the schedule.

2. *Schedule.* Include updated schedule sheets or milestone charts identifying phase of task and percentage of completion of each task, technical instruction, or order. Identify key dates in any testing program and a description of tests performed and significant test results.

3. *Design & Review.* For designs in process, provide estimated dates for design and drawing completion. For designs under review, indicate review level (100%, Final, Post-Final Backcheck), and projected design approval date. List and briefly describe current Contractor Change Requests (CCRF).

4. *Problems & Deficiencies.* Describe outstanding problems existing as of the previous status report, and their resolution status, indicating who has action to continue resolution. List new problem areas encountered or anticipated, their effect on the overall work effort/project, and steps being taken to remedy problem situations.

5. *Conference/Trip Outcome.* Describe significant results of conferences, trips, or directives from the Contracting Officer's representatives. List all contract modifications issued.

6. *Other.* Provide any other information which may cause significant changes in the program schedule.

7. *Future plans.* Provide a summary of future progress, recommendations and proposals both for the next reporting period and for any long term plans.

8. *Appendices.* Attach appendices, where applicable, for tables, references, charts, or other descriptive material. Each appendix shall be identified and referenced in the appropriate area of the report.

The initial status report & schedule is due within 15 days of contract award. Submit subsequent monthly status report no later than the 5th of each month.

Please see Appendix B for a sample monthly status report.

iii. **CCRF and Cost Worksheet**

The contractor shall request a contractor change request form when, prior to manufacture, it is necessary to depart from the applicable approved configuration documentation for a specific quantity of deliverable units or when, during or after manufacture, the contractor desires authorization to deliver nonconforming items to the Government which do not comply with the applicable technical requirements. For the unit(s) affected, the different configuration will normally be permanent.

INSTRUCTIONS FOR THE PREPARATION OF CONTRACTOR CHANGE REQUEST FORM:

Block 1. Date. Enter the submittal date.

Block 2. Request Number. Enter appropriate request number and revision letter. The request numbers are contractor assigned and sequential starting with number 001.

Block 3. Contract number/Delivery Order Number. Enter the complete contract number and delivery order number, if applicable.

Block 4. DODAAC. The DODAAC for the Navy Crane Center Contracting Authority is N62470.

Block 5a. Originator name. Enter the name of the contractor.

Block 5b. Originator address. Enter contractor's address.

Block 6. Contract Line Item Number. Enter the contract item number affected by the request.

Block 7. Crane in Production. Enter an **"X"** in the appropriate box. A change is considered a "Waiver" if the item has been manufactured, assembled, or fabricated prior to request submission. All other changes are considered "Deviations."

Block 8. Specifications Effected. Enter Section and Paragraph number of specifications effected.

Block 9. Drawings Effected. Enter drawing number, sheet number, and revision number of drawings affected. Attach a separate sheet if additional space is required.

Block 10. Priority. Request has effect on items noted.

EMERGENCY -	(1) Safety
(2)	Critical System Requirement
URGENT -	(1) Health
(2)	Performance
(3)	Interchangeability
	(4) Reliability, Survivability, Maintainability or Durability
	(5) Effective use or operation
(6)	Size & Weight
	(7) Appearance (Only if appearance is a Requirement factor)
(8)	System Requirement
ROUTINE -	All others

Block 11. Item Affected. An appropriate descriptive name of the part(s) shall be given here without resorting to such terms as "Numerous bits and pieces".

Block 12. Title of Request. Enter a brief descriptive title of the request.

Block 13. Effect on Delivery Schedule. Enter an **"X"** in the appropriate box. If yes, state the proposed impact in days on the contract delivery schedule that will result in Impact box.

Block 14a. Procuring Contract Officer Name. Enter the name of the government's contracting officer.

Block 14b. Procuring Contract Officer Phone. Enter the phone number of the government's contracting officer.

Block 15. Safety Concern. Safety has effect on items noted.

CRITICAL - Safety
MAJOR -Health

MINOR -All others
N/A-No safety concerns

Block 16. Effect on Cost/Price. The Cost Worksheet shall be attached to all Contractor Change Request Forms. The worksheet shall compare the cost of equipment as specified in the contract with the cost of the proposed change. CCRFs shall be disapproved if submitted without Cost Worksheet. The request shall include the specific proposed consideration/cost that will be provided to the Government if this "non-conforming" unit(s) (See FAR Part 46.407) is accepted by the Government. Please enter appropriate amount in box.

Block 17. Other Cranes Effected. Enter an **"X"** in the appropriate box. If yes, provide list of effected cranes in 17b.

Block 18. Description of Request. Describe the nature of the proposed departure from the technical requirements of the configuration documentation. Marked drawings should be included when necessary to provide a better understanding of the request.

Block 19. Need for Request. Explain why it is impossible or unreasonable to comply with the configuration documentation within the specified delivery schedule. Also explain why a request is proposed in lieu of a permanent design change.

Block 20. Contract Modification. Enter an **"X"** in the appropriate box depending on if the change documented on the form requires a contract modification.

Block 21a. Contractor Name. Enter the name of the contractor personnel responsible for request.

Block 21b. Contractor Title. Enter contractor personnel's title.

Block 21c. Contractor Signature. Contactor shall sign in this block.

Block 22. This block will be completed by Navy Crane Center.

To see a sample CCRF and Cost Worksheet, please see Appendix C.

B. **Drawings**

Drawings are typically required to be provided prior to crane fabrication and must be approved prior to shop test. Final, sealed drawings are required to be provided prior to shop test. Final, sealed drawings with revision blocks to indicate post-approval changes must be provided prior to crane acceptance. Specific

requirements for the timing of submission will be provided in the delivery order documentation.

i. **General Drawing Border with Title Block**

All final drawings must include a PE stamp as indicated in the example. Drawings submitted for review must follow the format described and must be accompanied by a Certificate of Review (see Appendix X) in lieu of a PE stamp. Be sure to change drawing revision numbers to reflect the most current revision and to list a description of any changes in the revision blocks.

Please see Appendix D for a sample General Drawing Border with Title Block.

ii. **General Arrangement Drawings**

General arrangement drawings reflect the exact overall design and configuration of the crane. These drawings show the layout of the crane, including all major components of the crane. These drawings show the plan view, front elevation view, side elevation view and trolley layout (if not included as product data) and typically include:

1. All dimensions specified in Appendix A of the specification
   a. Span of girder from centerline to centerline of runway rails
   b. Hook height
   c. Distance from top of rail to lowest obstruction point on ceiling
   d. Distance from top of rail to floor
   e. The hook approaches on either end of the girder
   f. Distance between main and auxiliary hook
   g. Distance from top of pendant controller to floor.
   h. Distance from each end of girder to nearest obstruction on each wall
   i. Distance from top of trolley to lowest obstruction point on ceiling
   j. Distance from centerline of rail to nearest obstruction on each wall.
   k. Rail size
   l. Mid-runway travel limits (if obstructions exist)
   m. Hook depth below floor level (if pits exist)
   n. Wheel spacing of bridge end trucks

2. A list of crane system descriptions from section 1.3 of the specification
   a. Total crane capacity
   b. Main hoist capacity
   c. Auxiliary hook capacity
   d. Rated speeds of bridge, trolley and hoists
   e. Minimum speeds of bridge, trolley and hoists
   f. Maximum wheel load without impact

3. A list of weights of crane components including:
   a. Total crane weight
   b. Drive Girder
   c. Idle Girder
   d. Trolley/Hoist
   e. End Trucks

Please see Appendix E for an example of General Arrangement Drawings.

iii. **Electrical Drawings**

Electrical drawings are the fundamental electrical submittal for cranes and reflect the exact design and configuration of the crane. These drawings show the layout of electrical equipment on the crane, including control panel enclosures, motors, brakes, limit switches, conduits, disconnects, and conductor systems. These drawings typically include:

1. A one line drawing showing wiring and connections between all electrical components and panels

2. Schematic representation of the control and power circuits of the crane. These schematics should show:
   a. conductor sizes, type, and temperature.
   b. type of overcurrent devices and the rating of the device. For adjustable circuit breakers, any adjustable settings for the breakers should be shown on the schematic. For fuses, the fuse type should be shown on the schematic.
   c. motor nameplate data, as specified by NFPA 70
   d. a note or description for any special description of operation.
   e. labels for all components that correspond to the nameplates that will be on the crane.
   f. specific drive parameters which add clarity to the drawing and allows the schematic reader to verify functionality of the circuit.
   g. a systematic approach to naming components and for displaying relay and contactor contacts and coils, such that all drawings are easily referenced and navigates
   h. obvious connections between crane manufacturer's components and subcontractor component's (i.e. radio control systems, load monitoring systems, etc..) , such that it is easy for the end user to navigate from the crane schematic to the component manufacturer's schematics
   i. all optional equipment removed from the schematics and not shown on the schematics as "optional".

3. Drawings showing component placement for all equipment located in a control panel.

4. Drawings showing the controller to be used and the layout of the controls and ancillary devices on the controller

5. Drawing to show festoon, cable, and festoon car layout

6. A complete material list of all electrical components on the crane

To see examples of electrical drawings, please see Appendix F.

iv. **Mechanical Drawings**

Mechanical drawings are typically limited to the drive arrangements. These drawings show the layout of the particular drive components with basic dimensions in plan view, front elevation view, side elevation view and trolley layout if not included as product data. Identify and label individual drive components with the appropriate part number, including: couplings, brakes, motors, and gear cases. In some cases, component torque values may be requested. For example, the required bolt torque for gear case feet.

Please see Appendix G for an example of mechanical drawings.

v. **Structural Drawings**

Structural drawings are the fundamental structural submittal for cranes and reflect the exact design and configuration of the crane. These drawings show the layout of the crane, including all major components of the crane and fabrication welding and bolted connection details. These drawings typically include:

1. Girder fabrication drawings. These drawings include:
   a. Dimensions of overall length of the girder
   b. Overall span length of the girder
   c. Location of full diaphragms
   d. Location of short diaphragms
   e. Location of stiffeners
   f. Material list including type and size of components used
   g. Connection details to the end trucks
   h. Location and connection of trolley end stops
   i. Bolt connection details including torque values
   j. Weld details for all components

2. Bridge end truck fabrication drawings, if not included in product data. These drawings include:
   a. Dimensions of overall length of the end truck
   b. Wheel spacing
   c. Material list including type and size of components used
   d. Location and connection of bridge bumpers

e. Bolt connection details including torque values
f. Weld details for all components

3. Trolley end truck fabrication drawings, if not included in product data. These drawings include:
   a. Dimensions of overall length of the end truck
   b. Material list including type and size of components used
   c. Location and connection of trolley bumpers
   d. Bolt connection details including torque values
   e. Weld details for all components

4. Trolley fabrication drawings, if not included in product data. These drawings include:
   a. Dimensions of overall size of the trolley
   b. Material list including type and size of components used
   c. Bolt connection details including torque values
   d. Weld details for all components

5. Load blocks (if fabricated)

Please see Appendix H for sample structural drawings.

C. Product Data

Product Data is typically required to be provided prior to crane fabrication and must be approved prior to shop test. Specific requirements for the timing of submission will be provided in the delivery order documentation.

Submit product data in bookmarked .pdf format. Mark up catalog cuts to clearly identify which components are being used on the crane and to which items these components apply. On the submitted catalog data, clearly identify any options and features that are utilized or that are necessary to meet the crane specification. The catalog cuts should be complete, such that the reviewer can easily tell what equipment is being supplied, how it meets the specification and how it relates to the drawings.

i. Mechanical Product Data

Mechanical product data is the manufacturer's catalog data for specific components used on the crane. The majority of mechanical design is provided through catalog cuts. Typically catalog information is required for:

1. Hoists (if preassembled) – If the hoist is a preassembled unit, bought as a commercial component, the product data must be included. Clearly mark the options to show compliance with the specification. Note: typically one or more options are required from the basic equipment to meet the specification.

2. Speed Reducers – Indicate case material, size, reduction, efficiency rating, and installation information.

3. Brakes – Indicate model and sizing. Show specific torque values and setting criteria; include electrical information.

4. Bearings – Show size, rating and case information for bearings not internal to commercial components, i.e. pedestals.

5. Couplings – Show size selection and installation criteria.

6. Load Block – For commercial load blocks, show size selection.

7. Bumpers – Identify bumper size and load tables or size selection chart as applicable to show compliance with specification.

To see examples of mechanical product data, please see Appendix I.

ii. **Electrical Product Data**

Electrical product data is the manufacturer's catalog data for specific electrical components used on the crane. Typically electrical catalog information is required for:

1. Variable Frequency Drives - Show drives used for each motion, show selections for reactors, show data logging equipment and dynamic braking resistors.

2. Motors - Show all information required by NFPA 430.7, motor type, and any options that are selected.

3. Electrical Enclosures - Show sizes and NEMA type of enclosures provided.

4. Runway Electrification and Collectors - Show all components for runway electrification system, ampacity of electrification system and collectors, collectors are of the tandem type, and any specialty options for outdoor or other special environments.

5. Limit Switches - Show both geared limit switches and weighted limit switches provided.

6. Bridge to Trolley Electrification - Show all equipment used for electrification including festoon cables, festoon cars, junction boxes, etc.

7. Operator Controls - Show controllers (pendant or radio) used on the crane, layout of controls, and options selected for controller. Show receiver information for radio controls systems.

8. Warning and Pilot Devices - Include all information for key switches, pilot lights, push buttons, and other devices.

9. Disconnect Switches - Provide current rating and fuses used for disconnect switches.

To see examples of electrical product data, please see Appendix J.

iii. **Structural Product Data**

Structural product data is the manufacturer's catalog data for specific components used on the crane. Typically structural catalog information is required for:

1. Bridge End Trucks including drive units

2. Trolley End Trucks including drive units

3. Patented track used for bridge girders or for runways of underrunning cranes

See Appendix K for examples of structural product data.

D. **Design Data**

Design Data is typically required to be provided prior to crane fabrication and must be approved prior to shop test. Specific requirements for the timing of submission will be provided in the delivery order documentation.

These calculations shall be in compliance with the design requirements listed in the specification. Calculations should be complete, such that the reviewer can easily tell values of input supplied, how it meets the specification, and how it relates to the calculations. Calculations should clearly state what the allowable design values are, what the calculated design values are and if the design meets the required design values. Submit calculations in bookmarked .pdf format.

i. **Structural Calculations**

Structural calculations are required for components which are not standard commercial products/assemblies. Typically structural calculations are required for:

1. Verifying girder design. These calculations will follow CMAA 70 format and include:

a. Calculations of load cases to ensure allowable stresses are not exceeded for the load cases requested in the specification
b. Buckling analysis
c. Location and size of diaphragms and stiffeners
d. Required camber
e. Verification that girder proportions are not exceeded
f. Verification of weld sizes
g. Verification of bolted connection design

2. Verifying bridge and trolley end truck and trolley design. These calculations will include:
   a. Calculations of load cases to ensure allowable stresses are not exceeded for the load cases requested in the specification
   b. Buckling analysis
   c. Verification of weld sizes
   d. Verification of bolted connection design

3. Verifying design of trolley and bridge bumpers and end stops in accordance with the guidelines in ASME B30.17 and AISC technical report number 6.

4. Verifying shear and bending moment on runway rail is not exceeded if wheel spacing is different that that shown on crane information forms.

To see examples of structural calculations, please see Appendix L.

ii. **Mechanical Calculations**

Mechanical calculations are only required for non-commercial, custom designed and built components. They may be specifically requested. Generally, the calculations below are required, as applicable.

1. Drum Design calculations to include:
   a. Rope fleet angle for drum.
   b. Calculations that show the drum can withstand all combined loads, including crushing or buckling, bending, torsion and shear, with consideration for stress reversal and fatigue.
   c. Stress analysis for the drum shaft.

2. Bearing Selection calculations applying to all bearings, hook thrust bearing and equalizer sheave bushing. These calculations shall include:
   a. Calculations for L_{10} bearing life to show anti-friction bearings meet minimum life expectancy for the specified service class based on full rated speed as provided by CMAA 70, table 4.8.2-1.

b. Calculation to show that bearing spacing meets CMAA 70 requirements in section 4.11.2 for applicable shafting configuration.
c. Hook thrust bearing and equalizer sheave bushing require a simple calculation to show the product ratings satisfy loading conditions.

3. Shafting and Sheave Pin design calculations for normal operating condition. Impact shall not be included. Calculations shall include:
   a. Static and fatigue stresses calculations for applicable shaft configurations in CMAA 70 section 4.11.4.
   b. Sheave pin design is considered shafting and requires stresses calculations.

4. Load Bearing Support Members
   a. Calculations shall show that the rated load stress does not exceed 20% of the average ultimate strength of the members' material.

To see examples of mechanical calculations, please see Appendix M.

iii. **Electrical Calculations**

Electrical calculations are required to verify component section and for components which are not standard commercial products/assemblies. Typically, electrical calculations are required for:

1. Minimum required horsepower for each drive motor. These calculations shall be carried out using the following guidelines:
   a. Shall be based on the formulae given in CMAA70
   b. Hoist motor sizing Kc factor shall not be less than 1.0
   c. Bridge and trolley drive motor calculations should use the "E" factor that is the published gear reducer efficiency rating. If the published reducer efficiency is not available, then 0.9 should be used for "E".
   d. The bridge and trolley drive minimum acceleration time to rated speed shall be three seconds
   e. No calculations shall be required to be submitted for packaged hoists, however, packaged hoists must still meet the acceleration and deceleration requirements

2. Overcurrent protection. These calculations shall include:
   a. Citations for all applicable NEC articles, including, but not limited to 430.72, 450.3, and Section V of article 610
   b. Sized according to NEC guidelines, and with protective device coordination in mind when choosing proper sizes

3. Conduit Fill Calculations. These calculations shall be carried out using the following guidelines:

a. Data from each conduit run with wire type(s), size(s), and quantity of each, along with intended conduit size and type
b. Calculations may refer to either Chapter 9 of NFPA 70 or the wire manufacturer's data sheets when calculating conduit fill
c. NFPA 70 Chapter 9, Table 1 directs user of allowable cross sectional areas of conduit fill acceptable based on quantity of conductors in the respective conduit, such that 1 conductor may fill up to 53%, 2 conductors may fill up to 31%, and any application greater than 2 conductors is limited to 40% fill, all with respect to cross sectional area.

4. Protective device coordination study. This study will include:
   a. Characteristic curves of each protective device, plotted together with other applicable protective devices with respect to current over time
   b. Devices are considered coordinated when no curves overlap. A specific example of an out-of-coordination design would be a hoist experiencing an overcurrent condition, but instead of its protective device opening, the upstream main breaker opens, effectively removing power from the entire crane before the hoist's breaker opens due to being out of coordination.

5. Lighting calculations (if required). These calculations shall include:
   a. Arrangement of lights required to meet the lighting requirements requested in the specifications. A typical specification, for example, may ask that lighting be provided such that 40 foot-candles at a distance of three feet from the floor be provided.
   b. An appropriate Light Loss Factor (LLF) shall be chosen to consider degradation of the light source over time to account for the accumulation of dust and dirt on the lamp, lenses, etc. through normal operation.
   c. Attention to type of lighting required per the specification must be given. Typical installations requiring metal halide lamps, for example, must either be a thick-glass parabolic reflector lamp (PAR) or use type O lamps with fixtures that provide a containment barrier and are physically constructed such that *only* type O lamps may be used, to be in accordance with NEC article 430.130 (F)(5).

To see examples of electrical calculations, please see Appendix N.

E. **Test Reports**

NAVFAC P-307, Appendix E, paragraph 1.4 identifies the requirement for non-destructive testing of crane hooks in the Navy inventory. This submittal is required to support certification of Navy cranes. The details of submittal requirements are taken directly from NAVFAC P-307.

Test Reports are typically required to be provided prior and approved prior to shop test. Specific requirements for the timing of submission will be provided in the delivery order documentation.

i. **Hook and Nut Non-Destructive Test (NDT) Report**

Reports for hook and nut NDT performed by vendors other than Crosby Group and Gunnebo Johnson shall meet the requirements below.

1. Technical Requirements
   a. NDT report either performed in accordance with ASTM A 275 or with NAVSEA Technical Publication T9074-AS-GIB-010/271.
   b. The NDT report shall state acceptance criteria: "No linear indications greater than 1/16".
   c. NDT report performed in accordance with ASTM A 275 shall indicate the "Wet" or "Dry" method.
   d. Restrictions for ASTM A275 Dry Method
      * Use only AC Yoke (DC and Permanent Magnet Yokes prohibited)
      * Use only handheld bulb (automatic powder blowers prohibited)
      * Arc strikes must be removed
      * Ammeters must be accurate to +/- 5% of full scale
   e. For non-magnetic hooks, use liquid penetrant test method per ASTM E 1417 or T9074-AS-GIB-010/271.

2. Documentation Requirements
   NDT reports shall include the following:
   a. A letter stating Vendor meets ASTM E 543.
   b. NDT Vendor's Procedure includes a signed technique sheet specific to the hook and nut being tested.
   c. Documentation to show that the NDT procedures have been approved by a qualified Level III Examiner who is independent from the vendor. Ensure procedures that have been approved are the same as the procedures used (including revision numbers and dates).
   d. NDT report shall be traceable to the unique identification of the hook and nut.

Reports for hook and nut NDT performed by Crosby Group and Gunnebo Johnson are accepted without accompanying letter of conformance or MT procedure when the requirements below are met:

1. NDT report shall be traceable to the unique identification of the hook and nut.

2. Crosby Group NDT report shall reference Crosby Quality Control procedure No. 0120, revision 16 and Technique Sheet No. 319N, revision 1.
3. Gunnebo Johnson NDT report shall reference Gunnebo Johnson Quality System Procedure QSP-69, revision A.

Please see Appendix O for an example of this Test Report.

F. **Certificates**

Certificates are letters from the contractor or vendor stating compliance with specification. Include contract number, job location, crane serial number and CDRL number on all certificates. Certificates must be signed by a responsible person.

Certificates are typically required to be provided and approved prior to shop test, except that the Certificate of Design Review by Professional Engineer must be provided with the initial Drawing submission. Specific requirements for the timing of submission will be provided in the delivery order documentation.

i. **Wire Rope Certificate**

The contractor shall provide the wire rope manufacturer's certification that the rope meets the published breaking strength of samples taken from reels and tested. Certification shall be traceable to the crane and reel.

Please see Appendix P for an example of the Wire Rope Certificate.

ii. **Periodic Overload Testing Certificate**

The contractor shall certify the crane is capable of being load tested semi-annually up to 131.25% of the rated capacity without any detrimental effects.

Please see Appendix Q for an example of the Periodic Overload Testing Certificate.

iii. **Crane Runway Rail Certificate & Survey**

Navy Crane Center will provide a survey of the runway rail with the contract. The contractor shall provide a certificate stating that the existing runway is suitable for the new crane to operate without any restrictions. If the contractor does not find the existing runway rail to be suitable for the new crane, the contractor shall provide the Government with corrective actions necessary for the new crane to operate without restriction and provide a list of restriction for crane operation on the existing runway.

Please see Appendix R for an example of the Crane Runway Rail Certificate and Survey.

iv. **Hazardous Material Certificate**
The contractor shall certify that the crane contains no hazardous materials. This letter should specifically reference the hazardous materials listed in the specification.

To see an example of a Hazardous Materials Certificate, please see Appendix S.

v. **Loss of Power Test Certificate**
As part of the test, power will be cut to the crane system. The loss of power test certificate is a letter stating that loss of power will not have detrimental effects to the product.

To see a sample Loss of Power Certificate, please see Appendix T.

vi. **Coupling Alignment Certificate**
Contractor shall submit coupling alignment data records with certification that the alignment of all shafting connected by means of flexible couplings are within manufacturer's installation tolerances. The data records shall be taken after the coupling's final installation. Submit the coupling alignment data record on the official form, which can be found on the NCC website at https://portal.navfac.navy.mil/ncc under the "Downloads" page.

To see a sample Coupling Alignments Certificate, please see Appendix U.

vii. **Hook Proof Test Certificate**
Contractor shall submit certification that the hook and hook nut have been proof tested and satisfy the acceptance criteria of ASME B30.10. The test load, test duration, and lack of deformation must be stated in the certificate.

To see a sample Hook Proof Test Certificate, please see Appendix V.

viii. **Welding Certifications**
The contractor shall provide a certificate stating that all welders, welding operators, weld inspector(s) and welding procedure (qualification) meet the requirements of AWS D 14.1 for all work performed in manufacturing the crane.

The contractor shall provide a separate certificate stating that all welders, welding operators, weld inspector(s), and welding procedure (qualification) meet the requirements of AWS D 1.1 for all work performed in installing/welding parts supporting the crane at/to building interfaces.

To see a sample Welding Certification, please see Appendix W.

ix. **Certificate of Design Review by Professional Engineer**
The contractor shall provide a certificate signed by the professional engineer(s) stating that they have completed a review of the final crane design. The certificate shall indicate the name, state of licensure and license number of the professional engineer(s).

To see a sample PE Design Review Certificate, please see Appendix X.

x. **Hoist Machinery Certificate**
If the main or auxiliary hoist design does not provide a delay feature to the hoist secondary brake, the hoist manufacturer shall provide a certification stating that the hoist machinery has been designed to withstand the simultaneous setting of both brakes.

To see a sample Hoist Machinery Certificate, please see Appendix Y.

G. **Manufacturer's Instructions**
Manufacturer's Instructions are typically required to be provided and accepted prior to shop test. Specific requirements for the timing of submission will be provided in the delivery order documentation.

i. **Crane Installation Plan**
The crane installation plan should address all steps required for the removal of existing components and installation of the new crane. An installation plan shall include the following:

1. A drawing containing:
   a. Weight of each component to be lifted
   b. Location of the center of gravity of each component to be lifted
   c. Location of laydown area
   d. Shipping route to laydown area
   e. Location of each component prior to being lifted
   f. Location of each component in the installed position.
   g. Method of attachment for rigging gear to component to be lifted
   h. Required torques, if necessary
   i. Location of interferences
   j. Calculated tension force in lifting gear
   k. Overhead clearances between structure and rail (runway and bridge)
   l. Overhead clearances between point sheave and overhead structure

2. A narrative of the lifting plan containing:
   a. Safety precautions
   b. Sequence of events
   c. Down rated capacity of forklift due to shifting of load center if applicable

3. Data Sheet of Lifting Equipment Used:
   a. Load charts for forklifts, tri-lifters, mobile cranes etc.
   b. Swivel Hoist Rings
   c. Hook Information
   d. Ground loading requirements

Please see Appendix Z for a sample crane installation plan.

ii. **Accident Prevention Plan (APP)**

The Accident Prevention Plan should include descriptive information for each of the categories in the delivery order. Accident Prevention Plans and Safety plans shall be site specific and, as a minimum, meet the requirements of Appendix E of the solicitation. The plans shall be prepared, signed, approved, and concurred on by applicable contractor personnel. Please attach documentation and certification for applicable categories.

Safety Plans shall describe specific requirements and/or procedures for the equipment being installed, inspected and/or maintained.

Procedures or requirements in a Corporate or Company Safety Program may be referenced in a Safety plan. If referenced, the procedures or requirements must be provided with the APP. Referencing a Corporate Safety Program or Manual as a Safety Plan is not site specific and is unacceptable.

Based on a risk assessment of contracted activities and on mandatory OSHA compliance programs, the Contractor shall address all applicable occupational risks and compliance plans.

Using the EM 385-1-1 as a guide, plans may include but are not limited to:

1. Overview – Background information, including:
   a. Contractor Name
   b. Contract Number
   c. Project Name
   d. Project #
   e. Project Description
   f. Brief Description of Work to be Performed
   g. Project Location
   h. Project Contacts, including the name, title, phone number and signature of the following:
      i. The Plan Preparer (Qualified Person or Competent Person, such as the corporate safety staff person or QC)

        ii. Plan Approval (Company/Corporate Officers authorized to obligate the company)
        iii. Plan Concurrence (e.g., Chief of Operations, Corporate Chief of Safety, project manager or superintendent, project safety professional, project QC)
    i. Responsibilities & Authorities
        i. Statement of the employer's ultimate responsibility for the implementation of the SOH program
        ii. Identification and accountability of personnel responsible for safety at both corporate and project level
        iii. The names of Competent and/or Qualified Person(s) and proof of competency/qualification
        iv. Requirements that no work shall be performed unless a designated competent person is present on the job site
        v. Line of authority
        vi. Policies and procedures regarding non-compliance with safety requirements (including disciplinary actions)
        vii. Provide written company procedures for holding managers and supervisors accountable for safety
2. Description of Plan Implementation
3. Subcontractors & Suppliers
    a. Provide procedures for coordinating SOH activities with other employers on the job site and contain the following:
        i. Identification of subcontractors and suppliers
        ii. Safety responsibilities of subcontractors and suppliers
4. Description of Medical Support
    a. on-site medical support
    b. off-site medical arrangements
        i. rescue and medical duties for those employees who are to perform them and the name(s) of on-site Contractor personnel trained in first aid and CPR
            1. A minimum of two employees shall be certified in CPR and first-aid per shift/site.)
5. Personal Protective Equipment
6. Safety and Health Policy
    a. Provide a copy of the current corporate/company Safety and Health Policy statement, detailing the commitment to providing a safe and healthful workplace for all employees.
    b. The Contractor's written safety program goals, objectives, and accident experience goals for this contract should be provided.
7. Safety & Health Inspections
    a. Specific assignment of responsibilities for a minimum daily job site safety and health inspection including:
        i. Who will conduct the inspections

    ii. Proof of inspector's training/qualifications (e.g., copy of license, state license/inspector number, documentation of training completion)
    iii. Procedures for documentation, deficiency tracking system
    iv. And follow-up procedures
  b. Any external inspections/certifications that may be required (e.g., USCG, State/Local)
8. Procedure for Accident Reporting
  a. The Contractor shall identify person(s) responsible for Accident Reporting, including Investigations, Reports, Logs, and Exposure data
  b. The requirements for accident reporting and notification shall be listed in this section
  c. The Contractor shall be required to:
    i. Report all accidents as soon as possible but not more than 24 hours afterwards to the Contracting Officer/Representative (CO/COR).
    ii. The contractor shall thoroughly investigate the accident and submit the findings of the investigation along with appropriate corrective actions to the CO/COR in the prescribed format as soon as possible but no later than five (5) working days following the accident.
    iii. Implement corrective actions as soon as reasonably possible;
  d. The following require immediate accident notification:
    i. A fatal injury;
    ii. A permanent total disability;
    iii. A permanent partial disability;
    iv. The hospitalization of three or more people resulting from a single occurrence;
    v. Property damage of $200,000 or more.
9. Training
  a. Requirements for new hire Safety and Occupational Health orientation training
  b. Requirements for mandatory training and certifications applicable to the project (e.g., explosive actuated tools, confined space entry, crane operator, driver, vehicle operator, Hazmat training, and PPE) and any requirements for periodic retraining/recertification
10. Equipment Inspection Records
11. Emergency Response Plans, including
  a. Emergency escape procedure and emergency escape route assignments including a predetermined assembly meeting area after an evacuation
  b. Emergency rescue procedures (e.g., for employees working at heights or in confined spaces)
  c. Rescue and medical duties for those employees who are to perform them

d. There preferred means of reporting fires and other emergencies (e.g. location of phones at the job site, and the posting of emergency telephone numbers and reporting instructions for ambulance, physician, hospital, fire, and police).
e. Sketch or map that will be posted at the job-site highlighting the route to the nearest medical facility and hospital.
f. Names and job titles of persons who can be contacted for further information of duties under the accident prevention plan.
g. Spill containment plant to contain and isolate the entire volume of a spilled hazardous substance.
h. Person-overboard plan for work over or immediately adjacent to water, including the wearing of U.S. Coast guard approved life jackets and the immediate availability of a skiff, and a person trained in operating it.

12. Activity Hazard Analysis
    a. Detailed project-specific hazards and controls shall be provided by an Activity Hazard Analysis (AHA) for each phase/activity of work.
        i. Identifies the work activity steps
        ii. Identifies the potential hazards of each step
        iii. Lists the measures for elimination or control of the hazards
    b. An AHA shall be prepared by a competent person for all non-routine phases of work and hazardous activities, and for work requiring additional or unusual safety precautions that will be performed under this contract on the Government job site.

Note: A competent person is defined as one who can identify existing and predictable hazards in the working environment or working conditions that are dangerous to personnel and who has authorization to take prompt corrective measures to eliminate them.

        i. Analyses will define the activities being performed and identify the sequences of work, the specific hazards anticipated, and the control measures to be implemented to eliminate or reduce each hazard to an acceptable level.
        ii. Work shall not begin on a work activity until the hazard analysis for the work activity has been accepted by the Contracting Officer and discussed with all engaged in the activity including the contractor, subcontractor(s), crane operator and riggers (if involving a lift), and the Contracting Officer's on-site representative.

13. Critical Lift Plan
    a. Installations utilizing critical lifts require a critical lift plan to ensure the safety of equipment and personnel. Critical lift plans shall be developed, reviewed and signed by all personnel involved in the lift and shall:

i. Specify the exact size and weight of the load to be lifted and all crane and rigging components which add to the weight.
ii. Specify the manufacturer's maximum load limits for the entire range of the lift as listed in the load charts.
iii. Specify the lift geometry and procedures, including:
    1. the crane position
    2. the center of gravity of the load
    3. height of the lift
    4. the load radius
    5. the boom length and angle, for the entire range of the lift.
iv. Designate the operator, lift supervisor and rigger and state their qualifications.
v. Include a rigging plan, which:
    1. shows the lift points, and
    2. describes rigging procedures and gear requirements.
vi. Describe the ground condition and outrigger or crawler track requirements (and, if necessary, the design of mats) needed to achieve a level, stable foundation of sufficient bearing capacity for the lift.
vii. Describe the operating base condition and any potential list (for floating cranes)
viii. List of environmental conditions under which lift operations are to be stopped
ix. Specify the coordination and communication requirements for the lift operation
x. For tandem or tailing crane lifts, specify the make and model of the cranes, the line, boom, and swing speeds, and the requirements for an equalizer beam.
xi. For lifts of personnel, demonstrate compliance with the requirements of 29 CFR 1926.550 (g).

14. Hazard Communication Plan
    a. A written plan for protecting personnel and property during the transport, storage and use of hazardous materials which addresses:
        i. Items required by 29 CFR 1926.59 (e)
        ii. Emergency procedures for spill response and disposal of hazardous materials
        iii. Hazardous Material Exclusions – aside from those used in the contract, the materials listed in Appendix E of the solicitation are prohibited from the Government job-site or activity
        iv. Yellow Plastic Exclusion – Yellow packaging materials are used by activities to contain and/or identify material, and therefore are not permitted for use by contractors on the naval activity, to prevent potential incident.
        v. Spills – Construction equipment shall have adequate oil absorbent material staged at the crane to contain a hydraulic component/system failure/leak. Contractors are responsible to

clean up non-emergency oil and hazardous substance spills from their equipment.

vi. Labeling system to identify contents on all containers on-site
vii. Current inventory of hazardous chemical on site.
viii. Location and use of Material Safety Data Sheets (MSDS) and that:
    1. a MSDS for each hazardous substance at the Government job site will be maintained in an inventory, provided to the Contracting Officer, and made available to all potentially exposed employees.
    2. for emergency response purposes, each entry in the inventory shall include the approximate quantities that will be on site at any given time.
    3. a site map will be attached to the inventory showing where inventoried hazardous substances are stored.
    4. the inventory and the site map shall be updated as frequently as necessary to ensure accuracy.
ix. Training (to include potential safety and health effects from exposure to hazardous substances).
x. The notification process when hazardous substances are brought onto the Government job site and that all employees potentially exposed to the substance will be advised of information in the MSDS for the substance.

15. Hazardous Energy Control Plan
    a. An OSHA compliant Energy Control Program provides the procedures and methods for the control of hazardous energy during the installation, maintenance, and inspection of all equipment where the unexpected energization or movement of this machinery could result in a release of energy which might cause injury to personnel and/or property damage.
    b. A hazardous energy control plan shall describe:
        i. Specific energy control requirements
        ii. Lockout/tagout procedures
    c. The contractor shall comply with 29 CFR 1910.147 and 29 CFR 1910.333 when on activity property.
        i. The contractor may use OSHA standard STD 1-7.3 as a guide on procedures to follow in the control of hazardous energy when on the job-site.
    d. The contractor shall use the colors designated by the activity for the “locks” used in lockout/tagout for the respective energy sources when on activity property.
    e. Lockout/tagout tags are “danger tags” and shall comply with the colors required by 29 CRF 1926.200(b)
16. Fall Protection and Prevention Plan
    a. Description of the fall hazards at the job site
    b. Type of fall protection/prevention methods or systems to be used

c. Training requirements for employees exposed to fall hazards
d. Type of fall protection equipment and systems provided to the employees that might be exposed to fall hazards
e. Identify the tie-off points (anchorages) to be used for attachment of personal fall arrest equipment that are capable of supporting at least 5,000 pounds per employee attached, or have been designed, installed, and used as follows:
    i. As part of a complete personal fall arrest system which maintains a safety factor of at least two; and
    ii. Under the supervision of a qualified person (as defined in Appendix E of the solicitation)
f. If there is a need to devise an anchor point from existing structures such as beams, or eye-bolt, a qualified person shall be used to evaluate the anchorages.

17. Fire Protection & Prevention Plan
    a. Must cover items described in NFPA 241, including fire prevention during hot work
    b. Shall state that welding, burning, and open flame work will only be performed on the Government job-site when:
        i. The methods have been approved by the activity (cognizant Safety Office) where the job-site is located,
        ii. The activity where the job-site is located has been notified that hot work is going to be performed, when it is going to be performed, and the number of days needed,
        iii. A fire watch is provided by the contractor,
        iv. An adequate fire extinguishing equipment is available, and
        v. Fuel bottles are placed by the contractor at ground level and outside of the hot work area.
18. Severe Weather Plan
    a. Lists procedures to follow during severe weather; must state:
        i. that cranes shall not be operated when wind speeds at the top of the crane approach maximum wind velocity recommendations of the manufacturer;
        ii. that operations undertaken during weather conditions that produce icing of the crane structure or reduced visibility shall be performed at reduced functional speeds and with signaling means appropriate to the situation; and
        iii. when conditions are such that lightning could occur, all crane operations shall cease.
19. Emergency Lighting Plan
    a. Emergency lighting facilities for means of egress are described in NFPA 101-2000 Life Safety Code.
    b. Emergency illumination is required for not less than 1-1/2 hours in the event of failure of normal lighting.
    c. Emergency lighting facilities must provide initial illumination that is not less than an average of 1 ft-candle (10 lux) and, at any point,

not less than 0.1 ft-candle (1 lux), measured along the path of egress at floor level.

d. If the on-site work is being performed in a building that has emergency lighting facilities that provides adequate illumination of the egress routes from the contractor work areas during a power failure, then the building's emergency lighting plan may be used for this submission.

20. Work Site Lighting Plan
    a. Absolute minimum illuminances at any time and location where safety is related to visibility are described in IESNA Lighting RR-96.
    b. Plan must assure that adequate illumination is provided in work areas within a crane, within a building, and during nighttime operations.
21. Drug & Alcohol Prevention Plan
    a. A drug and alcohol prevention plan shall prohibit for employees on the job-site:
        i. illegal drug use,
        ii. consumption of alcohol, and
        iii. use of prescription drugs that have adverse side effects that may affect workplace safety.
22. Site Sanitation Plan
    a. Plan shall map out the provisions for
        i. supplying adequate drinking water,
        ii. supplying toilet facilities,
        iii. supplying washing facilities and waste disposal, and
        iv. steps taken to ensure all debris is kept cleared from work areas, passageways and stairs, in and around work structures.
23. Mobile Cranes & Articulating Boom Cranes (if this equipment is being used)
    a. Plan must comply with ASME B30.5 for mobile cranes; ASME B30.22 for articulating boom cranes, ASME B30.3 for construction tower cranes, or ASME B30.8 for floating cranes
    b. For mobile cranes with original equipment manufacturer's (OEM) rated capacities of 50,000 pounds or greater, the crane operator needs to be designated as qualified by a source that qualifies crane operators. The contractor shall provide to the Contracting Officer proof of current qualifications as per contract data requirements list (CDRL) "Crane Operator's Qualification" contained in the contract.
    c. In addition to meeting the requirements of 29 CFR 1926, the plan shall indicate that mobile cranes be equipped with:
        i. An anti-two-block device or a two-block damage prevention feature for all points of two-blocking
        ii. A boom angle indicator or radius indicator readable from the operator's station

iii. A boom hoist disconnect, shutoff, or hydraulic relief to automatically stop the boom hoist when the boom reaches a predetermined high angle
iv. For telescoping booms:
    1. a boom length indicator readable from the operator's station
    2. an integrally mounted holding device provided with the telescopic hydraulic cylinder(s) to prevent uncontrolled retraction of the boom in the even of a hydraulic system failure
    3. an integrally mounted holding device provided with boom support hydraulic cylinder(s) to prevent lowering of the boom in the event of a hydraulic system failure
v. For night operations, lighting shall be adequate to illuminate the working areas while not interfering with the operator's vision
vi. Each load shall be rigged/attached independently to the hook/master-link in such a fashion that the load cannot slide or otherwise become detached. The practice of "Christmas tree lifting" steel is prohibited. Long slender objects shall be rigged to be lifted horizontally using two independent choker or eyebolt type pick-up points in such a fashion that the load cannot slide or otherwise become detached, taking into account the sling angle to the load in determining sling loadings.
vii. Piers and waterfront areas such as along dry docks and quay walls may have load restrictions
    1. Notify the Contracting Officer prior to moving a crane onto a pier, dry dock, or other waterfront area. Provide the Contracting Officer with the crane make, model, and configuration in which it is to be used.
    2. The contractor shall comply with cribbing requirements issued with the contract.
    3. Fueling and equipment maintenance is prohibited on piers and other over water sites.

24. Jacking Operations Plan (if applicable)
    a. Jacking operations shall be designed and planned by a registered professional engineer who has experience in jacking systems.
    b. Plan shall include detailed instructions and sketches indicating the prescribed method of erection or disassembly.
        i. These plans and designs shall include provisions for ensuring lateral stability of the ground or pier area during the lifting of the crane onto the crane rails.
    c. A jacking operations plan shall discuss the following:
        i. Jacks/lifting units shall be marked to indicate their rated capacity as established by the manufacturer. The rated load shall be legibly and permanently marked in a prominent

location on the jack by casting, stamping, or other suitable means.

ii. Jacks/lifting units shall not be loaded beyond their rated capacity as established by the manufacturer.

iii. The operator shall make sure that the jack used has a rating sufficient to lift and sustain the load. Jacking equipment shall be capable of supporting at least two and one-half times the load being lifted during jacking operations and the equipment shall not be overloaded. For the purpose of this provision, jacking equipment includes any load bearing component, which is used to carry out the lifting operation(s).

iv. Equipment shall be designed and installed so that the lifting rods cannot slip out of position or the contractor shall institute other measures, such as the use of locking or blocking devices, which will provide positive connection between the lifting rods and attachments and will prevent components from disengaging during lifting operations. In the absence of a firm foundation, the base of the jack shall be blocked. If there is a possibility of slippage of the cap, a block shall be placed in between the cap and the load.

v. Jacks/lifting units shall have a safety device installed which will cause the jacks/lifting units to support the load in any position in the event any jack lifting unit malfunctions or loses its lifting ability.

vi. Jacking operations shall be synchronized in such a manner to ensure even and uniform lifting of the load. During lifting, all points at which the load is supported shall be kept within ½ inch of that needed to maintain the load in a level position. The operator shall watch the stop indicator, which shall be kept clean, in order to determine the limit of travel. The indicated limit shall not be overrun.

vii. If a leveling is automatically controlled, a device shall be installed that will stop the operation when the ½ inch tolerance set forth in paragraph (vi.) above is exceeded or where there is a malfunction in the jacking (lifting) system.

viii. If leveling is maintained by manual controls, such controls shall be located in a central location and attended by a competent person while lifting is in progress. The competent person must be experienced in the lifting operation and with the lifting equipment being used. A “competent person” is defined as one who is capable of identifying existing and predictable hazards in the surroundings or working conditions which are unsanitary, hazardous, or dangerous to employees, and who has authorization to take prompt corrective measures to eliminate them.

ix. After the load has been raised, it shall be cribbed, blocked, or otherwise secured at once.
x. The maximum number of annually controlled jacks/lifting units on the load shall be limited to a number that will permit the operator to maintain the load level within specified tolerances of paragraph (vi.) above, but in no case shall that number exceed fourteen.
xi. Under no circumstances, shall any employee who is not essential to the jacking operation be permitted immediately beneath the load while it is being lifted.
xii. Jacks/lifting units shall be positively secured so that they do not become dislodged or dislocated.
xiii. Each jack shall be thoroughly inspected at times which depend upon the service conditions. Inspections shall be not less frequent than the following:
1. for constant intermittent use, once every 6 months,
2. for jacks sent out of shop for special work, when sent out and returned,
3. for a jack subjected to abnormal load or shock, immediately before and immediately thereafter.
xiv. Repair or replacement parts shall be examined for possible defects.
xv. Jacks, which are out-of-order, shall be tagged accordingly, and shall not be used until repairs are made.
xvi. All jacks shall be properly lubricated at regular intervals.
xvii. Hydraulic jacks exposed to freezing temperatures shall be supplied with adequate antifreeze liquid.

25. Asbestos Hazard Abatement Procedure (if applicable)
a. Plan must be in accordance with 29 CFR 1926.1101
b. Plan shall include, but is not limited to:
i. Safety precautions
ii. Confine space entry procedures
iii. Encapsulation and removal procedures
iv. The precise personal protective equipment to be used
v. Location of the asbestos control areas
vi. Sequencing of asbestos related work
vii. Disposal plan
viii. Type of wetting agent and asbestos sealer to be used
ix. Locations of local exhaust equipment
x. Planned air monitoring strategies
xi. Detailed description of environmental pollution control method
xii. Special safety precautions that must be taken if any part of the building is occupied (if applicable)
xiii. Signed certificates that employees doing removal:
1. have received training in the proper handling of asbestos-containing materials and wastes,

2. understand the health implications and risks involved, and
3. understand the use and limits of respiratory equipment to be used.

xiv. Information on each testing laboratory selected for sampling, analysis, and reporting of airborne concentrations of asbestos fibers, including:

1. name, address, telephone number
2. certification of American Industrial Hygiene Association (AIHA) accreditation
3. certification that persons counting the samples have been judged proficient by current inclusion on the AIHA Asbestos Analysis Registry
4. certification that the laboratory successfully participates in the Proficiency Analytical Testing Program

xv. written evidence that the landfill for disposal is approved for asbestos disposal by EPA State and local regulations

xvi. statement that the contractor will comply with all applicable laws, ordinances, criteria, rules, and regulations of Federal, State, regional, and local authorities regarding handling, storing, transporting, and disposing or asbestos waste materials.

26. Material Containing Lead Removal Plan (if applicable)

a. Plan shall show that disposal of material containing lead is in accordance with Federal and local hazardous waste management regulations; plan shall include (but is not limited to):

i. sketch showing the location, size, and details of lead control areas, critical barriers, physical boundaries, location and details of decontamination facilities, viewing ports, and mechanical ventilation system.

ii. description of equipment and materials, the appropriate engineering controls implemented, and job responsibilities for each activity such as cutting, sawing, sanding, scraping, abrasive blasting, and/or high temperature cutting of materials containing lead paint from which lead is emitted.

iii. eating, drinking, smoking and sanitary procedures, interface of trades, sequencing of lead related work, collected waste water and dust containing lead and debris, air sampling, respirators, personal protective equipment, and a detailed description of the method of containment of the operation to ensure that airborne lead concentrations of 30 micrograms per cubic meter of air are not reached or exceeded outside of the lead control area.

iv. operational and environmental sampling, training and strategy, sampling and analysis strategy and methodology, frequency of sampling, duration of sampling, and qualifications of sampling personnel in the air sampling portion of the plan.

v. certificate for each employee, signed and dated by the accredited training provider, stating that each employee has received the required training in accordance with 40 CFR 745.
vi. the name, address, and telephone number of the testing laboratory selected to perform the air and wipe sampling, testing, and reporting of airborne concentrations of lead (use a laboratory participating in the EPA National Lead Laboratory Accreditation Program).
vii. Description of the disposal of all material, whether hazardous or non-hazardous in accordance with all laws and provisions and all Federal, State or local regulations.

Additional plans that may be contained in the APP include:

1. Layout Plans
2. Access and Haul Road Plan
3. Respiratory Protection Plan
4. Health Hazard Control Program
5. Process Safety Management Plan
6. Radiation Safety Program
7. Abrasive Blasting
8. Night Operations Lighting Plan
9. Wild Land Fire Management Plan
10. Float Plan
11. Demolition Plan
12. Excavation/Trenching Plan
13. Emergency Rescue (tunneling)
14. Underground Construction Fire Prevention and Protection Plan
15. Compressed Air Plan
16. Formwork and Shoring Erection and Removal Plans
17. Pre-Cast Concrete Plan
18. Lift Slab Plans
19. Steel Erection Plan
20. Site Safety and Health Plan for HTRW work
21. Blasting Safety Plan
22. Diving plan
23. Confined Space Program.

Please refer to Appendix E of the solicitation for clarification of any requirements or definitions.

Please see Appendix AA for examples of certain items required to be in the Accident Prevention Plan.

iii. **Training Course Outline**

The contractor shall prepare a training course outline. The outline shall contain enough detail for the Government to determine that all topics are adequately covered as prescribed in the specification.

Please see Appendix BB for a sample Training Course Outline.

H. **Manufacturer's Field Reports**

Manufacturer's Field Reports are typically required to be provided and accepted prior to crane installation. Specific requirements for the timing of submission will be provided in the delivery order documentation.

i. **Brake Adjustment Report**

The contractor shall provide a brake adjustment record for each brake on the crane. The brake adjustment records shall be submitted on the official form, which can be found on the NCC website at https://portal.navfac.navy.mil/ncc under the "Downloads" page.

Please see Appendix CC for a sample Brake Adjustment Report.

ii. **Shop Test Deficient Items List**

Upon completion of the government witnessed shop test and inspection of the crane, a list of deficient items will be compiled and attached to NCC Form 08-002 and signed by the contractor, Navy Crane Center Representative, and activity representative (if applicable) and forwarded to the Contracting Officer. All shop test items shall be resolved prior to shipment of the crane, unless authorized by the contracting officer.

Please see Appendix DD for a sample list of Shop Test Deficient Items.

iii. **Operation and Maintenance Data**

The operation and maintenance manuals shall include a table of contents for operation instruction, preventive maintenance, parts information, drawing list, supply list, catalog cuts, photographs, and calculations. The body of the technical manuals shall include the following: contractor's detailed written procedures, operation instructions, preventive maintenance information, drawings, parts information, supplies needed, catalog cuts, photographs, and calculations. Maintenance information shall include recommended maintenance procedures and manufacturer's installation and maintenance manuals (for purchased components) and lubrication instructions. Operation information shall include detailed crane operating and safety instructions. Parts information shall include all information on all contractor-designed parts, all purchased sub-assemblies and components including the manufacturer's part number. The information shall be broken-out to the smallest replacement part. Within these sections the following information shall also be included:

1. Maintenance and programming instructions for the drives.
2. Maintenance instructions including maintenance, alignment, adjustment, and calibration instructions for commercial components and parts lists.
3. Operating instructions and special precautions for starting/stopping, operation, and safety.
4. Preventive maintenance instructions including location of lubrication points, type of lubricant to be used, and the frequency of lubrication, which shall agree with the lubrication drawing provided.
5. Recommended spare parts list.
6. A complete listing of all control system parameters with an explanation of their functions.

Please see Appendix EE for sample Operation and Maintenance Data.

I. Closeout Submittals

Closeout submittals are requested following crane acceptance, generally as part of the final technical manuals. They are typically required to be provided and accepted prior to final payment. Specific requirements for the timing of submission will be provided in the delivery order documentation.

i. Control System Parameter Record

After the crane has passed the final field test, the contractor shall complete a control system parameter record for the crane and provide the crane parameter file downloaded from the crane at time of acceptance, if applicable. The record shall include the contract number, contractor's name and address, date, and all control system parameters and their final settings. The contractor shall designate each control system parameter as either used or unused.

Please see Appendix FF for a sample control system parameter record.

ii. List of Parameters and Crane OEM's Approved Crane Range

After the crane has passed the final field test, the contractor shall submit a parameter list for each electronic drive to document the crane designed parameter ranges in which each parameter can be safely tuned by the end user for each parameter specified in the parameter list used on the crane. The crane contractor-determined design range shall be the applicable portion of the drive's default range for each parameter. The crane contractor must provide justification for each range of each parameter on the list. When necessary, the justification shall include appropriate calculations.

Please see Appendix GG for a sample list of parameters and crane OEM's approved crane range.

iii. **Frequency Allocation Application**

The technical section of the frequency allocation application attached as Appendix G, addressing their equipment, shall be completed by the manufacturer of the radio control equipment being furnished under this contract.

Please see Appendix HH for a sample frequency allocation application.

III. Appendix – Examples

A. Sample Schedule with milestones

Please see the following pages for a sample schedule.

Activity ID	Activity Description	Orig Dur	Rem Dur	%	Early Start	Early Finish
001	Award	1	1	0	23JAN09	23JAN09
002	Post Award Meeting	1	1	0	24FEB09	24FEB09
003	100 % Drawings and Calc	70	70	0	23JAN09	30APR09
004	NCC review of Drawings	11	11	0	01MAY09	15MAY09
005	Final Design	6	6	0	18MAY09	25MAY09
006	NCC review	5	5	0	26MAY09	01JUN09
007	Order Long Lead Items	87	87	0	02MAR09	30JUN09
008	Fabrication	196	196	0	01JUN09	01MAR10
009	Shop Test	4	4	0	01MAR10	04MAR10
010	Pre Install Meeting	1	1	0	01FEB10	01FEB10
011	Crane Delivery	6	6	0	08MAR10	15MAR10
012	Crane Installation	5	5	0	15MAR10	19MAR10
013	Field Load Test	2	2	0	22MAR10	23MAR10
014	Crane Acceptance	1	1	0	24MAR10	24MAR10
015	Completion of Warranty	261	261	0	24MAR10	23MAR11
CDRLs	Critical Submittals					
A002	Final Stamped Dwgs	5	5	0	15FEB10	21FEB10
A011	Hook & Nut NDT Cert	10	10	0	01FEB10	14FEB10
A014	Runway Cert.	10	10	0	15FEB10	01MAR10
A015	Shop Test Procedure	10	10	0	01FEB10	14FEB10
A016	Lift, Install & Handling Plan	30	30	0	15JAN10	01MAR10
A017	Accident Prevention Plan	10	10	0	15FEB10	01MAR10

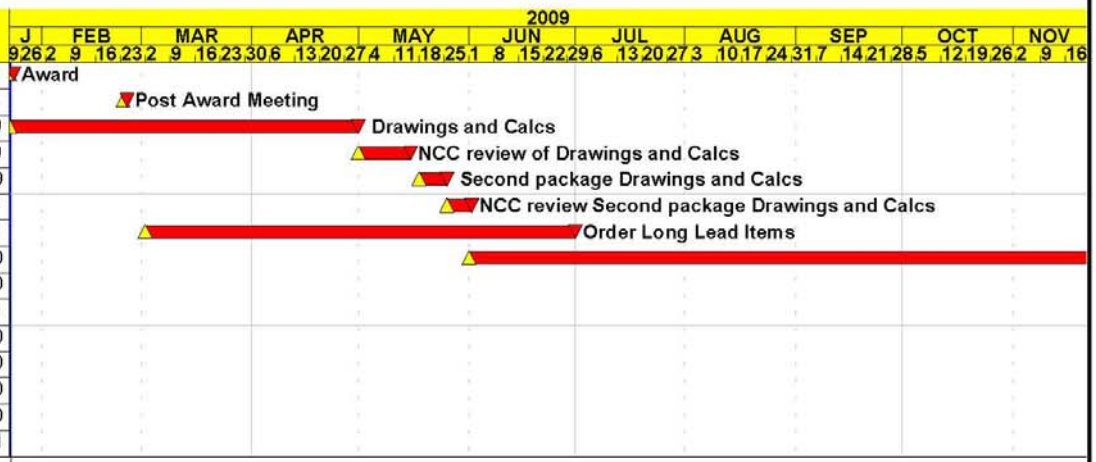

Project Start	23JAN09	Early Bar	
Project Finish		Float Bar	
Data Date	23JAN09	Progress Bar	
Plot Date	17FEB09	Critical Activity	

D00

Crane Contractor

Crane Project Title, Project location

Sheet 1A of 1B

© Primavera Systems, Inc.

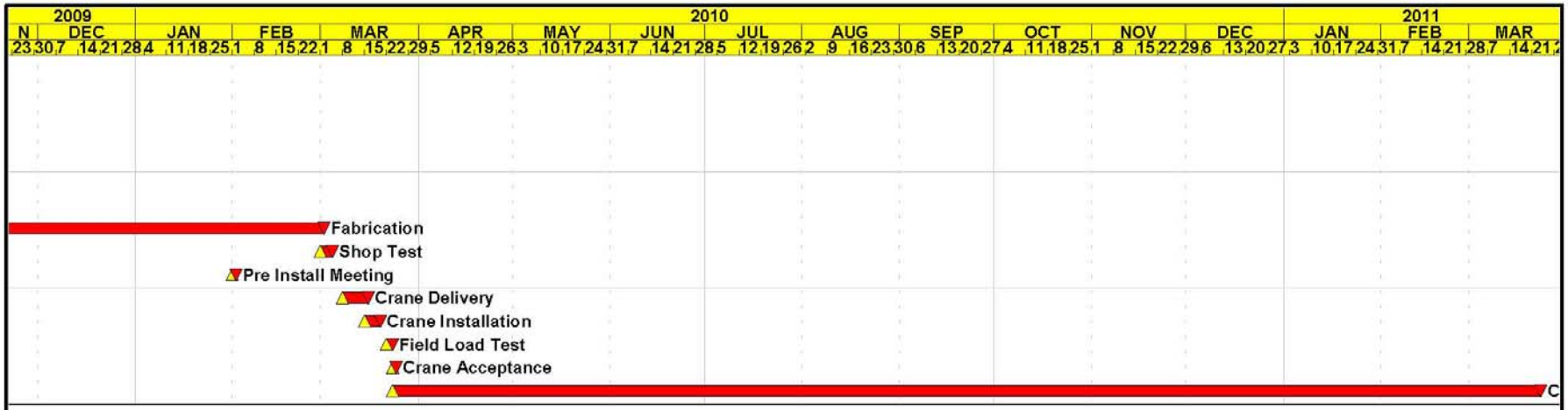

Sheet 1D of 1D

B. Monthly Status Report

Please see the following pages for a sample monthly status report.

Crane Parts Manufacturers

July 2, 2010

From: John Smith, President
Crane Parts Manufacturers (CPM)

Project: 25/5 Ton OET Crane @ Anywheresville Shipyard, Bldg 1232
Title: July 2010 Monthly Project Status (CDRL-A001)
Contract Number: N62470-104-D-XXXX Delivery Order XXXX
Security Level: Unclassified

To: ***NCC Contract Administrator*** Mr. Norm Yeatts
NCC Project Manager Mr. Thomas Lund
DCMA Mr. Jones

Project / Milestone Status:
Project is currently one week behind original baseline schedule. In the past month, 100% submittal review comments were received and crane design was revised accordingly. Final design has been submitted, reviewed by NCC and approved. Fabrication and procurement of vendor items has begun. Approval of CCRF #2 for alternate motor has shortened lead time by 3 weeks, which shortens the project critical path by 2 weeks, this will bring the project back on schedule.

Schedule:
Gant chart for project milestones and CDRLs is attached to this report.

Design & Review:
Final design has been submitted and approved on 19 June 2010. Four open back-check comments will be corrected on PE stamped drawings which will be submitted next month. CCRF #2 for alternate motor was approved on 10 June 2010.

Problems / Deficiencies:
Removal of existing crane may require a roof penetration. CPM engineer to conduct site visit during week of 20 July 2010, and discuss w/ NCC and NNSY. Roof penetration may prolong site work by one week.

123 Crane Center Way, Portsmouth, VA 23709
Phone (555) 123-4567 Fax (555) 123-5678

Conference / Trip Outcome:
Teleconference to discuss final design review comments was held 14 June 2010, brake issue was resolved and crane design was approved. Contract Mod # 003 was issued which incorporated CCRF #2.

Other:
We have requested information on the facility max. ground loading pressure to aid in preparation of the crane removal & installation plans. Information needed by 15 August 2010.

Future Plans:
Fabrication and component procurement will continue. Work on APP and removal/install plan to begin following site visit in July. Pre-installation meeting tentatively scheduled for week of 9 September 2010. Shop test in late September / early October.

Appendices:
None.

John Smith

John Smith, President
Crane Parts Manufacturers

C. CCRF and Cost Worksheet

Please see the following pages for a sample CCRF or Cost Worksheet.

Contractor Change Request Form

RETURN TO THE GOVERNMENT-ISSUING CONTRACT OFFICER FOR THE CONTRACT / PROCURING ACTIVITY LISTED IN BLOCK 14 OF THI S FORM.

1. DATE			

2. REQUEST NUMBER	REV	3. CONTRACT NUMBER / DELIVERY ORDER NUMBER	4. DODAAC
			N62470

5. ORIGINATOR		6. CONTRACT LINE ITEM #
a. Name (First, Middle Initial, Last)	b. Address (Street, City, State, Zip Code)	

8. SPECIFICATIONS EFFECTED	9. DRAWINGS EFFECTED			10. PRIORITY	7. CRANE IN PRODUCTION
SPECIFICATION SECTION/PARAGRAPH	DRAWING NUMBER	SHEET	REV		☐ Yes (Waiver)
a.	a.			☐ Emergency	☐ No (Deviation)
b.	b.			☐ Urgent	11. ITEM EFFECTED
c.	c.			☐ Routine	

12. TITLE OF REQUEST	13. EFFECT ON DELIVERY SCHEDULE	
	☐ Yes	IMPACT
	☐ No	

14. PROCURING CONTRACT OFFICER		15. SAFETY CONCERN
a. Name (First, Middle Initial, Last)	b. Phone	☐ Critical
		☐ Major
		☐ Minor
		☐ N/A

17. DOES CHANGE EFFECT MULTIPLE CRANES?	
a. ☐ Yes (Change Proposal) ☐ No (Deviation/Waiver)	b. Effected Cranes

16. EFFECT ON COST/PRICE	
PROVIDE SUPPORTING COST WORKSHEET	
☐ Cost Increase ☐ No Change	
☐ Cost Reduction	Amount -$

18. DESCRIPTION OF REQUEST

19. NEED FOR REQUEST

20. CONTRACT MODIFICATION	21. CONTRACTOR		
☐ Required ☐ Not Required	a. Name (First, MI, Last)	b. Signature / Contractor	c. Title

22. NAVY CRANE CENTER APPROVAL/DISAPPROVAL			
a. Design	Name (First, MI, Last)	Signature / Design	Date
☐ Approved ☐ Disapproved			
b. Comments			
c. Project Management	Name (First, MI, Last)	Signature / Project Management	Date
☐ Approved ☐ Disapproved			
d. Contracts	Name (First, MI, Last)	Signature / Contract Specialist	Date
☐ Approved ☐ Disapproved			

NCC FORM 07-001

Contractor Change Request Form Cost Worksheet

COST OF THE PART/COMPONENT AS SPECIFIED IN THE CONTRACT.

THIS WORKSHEET SHALL BE ATTACHED TO THE CONTRACTOR CHANGE REQUEST FORM TO SUPPORT INFORMATION PROVIDED IN BLOCK 16 OF THE CONTRACTOR CHANGE REQUEST FORM.

1. DATE

2. REQUEST NUMBER

Material Cost/Savings

Material Description	Cost/Savings
M1.	$
M2.	$
M3.	$
M4.	$
M5.	$
M6.	$
M7.	$
M8.	$
M9.	$
Total Material Cost/Savings	$

Labor Cost/Savings

Labor Category	Hours	Labor Rate	Cost/Savings
L1. Production		$	$
L2. Engineering		$	$
L3. Administrative		$	$
L4. Other Labor _____		$	$
L5. Other Labor _____		$	$
Total Labor Cost/Savings			$

Other Costs/Savings

Description	Cost/Savings
O1. Profit	$
O2. Other _____	$
O3. Other _____	$
O4. Other _____	$
O5. Other _____	$
Total Other Cost/Savings	$

Total Cost/Savings	$

NCC FORM 07-001A

Contractor Change Request Form Cost Worksheet

COST OF PART/COMPONENT PER CONTRACTOR CHANGE REQUEST.

THIS WORKSHEET SHALL BE ATTACHED TO THE CONTRACTOR CHANGE REQUEST FORM TO SUPPORT INFORMATION PROVIDED IN BLOCK 16 OF THE CONTRACTOR CHANGE REQUEST FORM.

1. DATE

2. REQUEST NUMBER

Material Cost/Savings

Material Description	Cost/Savings
M1.	$
M2.	$
M3.	$
M4.	$
M5.	$
M6.	$
M7.	$
M8.	$
M9.	$
Total Material Cost/Savings	$

Labor Cost/Savings

Labor Category	Hours	Labor Rate	Cost/Savings
L1. Production		$	$
L2. Engineering		$	$
L3. Administrative		$	$
L4. Other Labor _____		$	$
L5. Other Labor _____		$	$
Total Labor Cost/Savings			$

Other Costs/Savings

Description	Cost/Savings
O1. Profit	$
O2. Other _____	$
O3. Other _____	$
O4. Other _____	$
O5. Other _____	$
Total Other Cost/Savings	$

Total Cost/Savings	$

NCC FORM 07-001A

D. General Drawing Border with Title Block

Please see the following page for an example of this item.

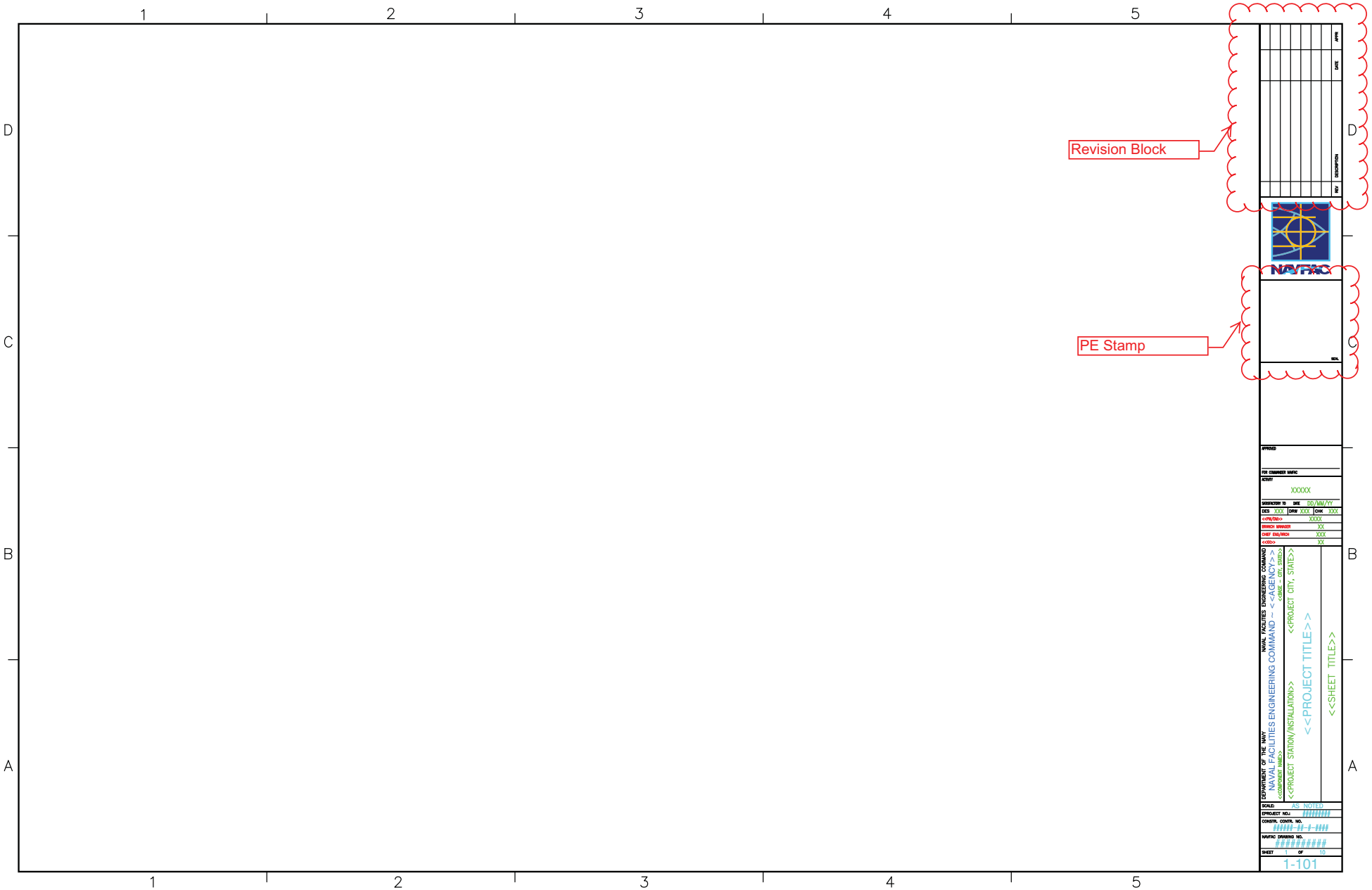
Revision Block
PE Stamp
REV
DESCRIPTION
DATE
APPR
NAVFAC
SEAL
APPROVED
FOR COMMANDER NAVFAC
ACTIVITY
XXXXX
WARRANTY TO
DATE
DD/MM/YY
DES XXX
DRW XXX
CHK XXX
<<PM/DM>>
XXXX
BRANCH MANAGER
XX
CHIEF ENG/ARCH
XXX
<<DD>>
XX
DEPARTMENT OF THE NAVY
NAVAL FACILITIES ENGINEERING COMMAND
<<COMPONENT NAME>>
NAVAL FACILITIES ENGINEERING COMMAND – <<AGENCY>>
<<BASE – DIV, DIST>>
<<PROJECT STATION/INSTALLATION>>
<<PROJECT CITY, STATE>>
<<PROJECT TITLE>>
<<SHEET TITLE>>
SCALE:
AS NOTED
EPROJECT NO.:
CONSTR. CONTR. NO.
NAVFAC DRAWING NO.
SHEET
1
OF
10
1-101

E. General Arrangement Drawings

Please see the following pages for examples of general arrangement drawings.

i. **General Arrangement**

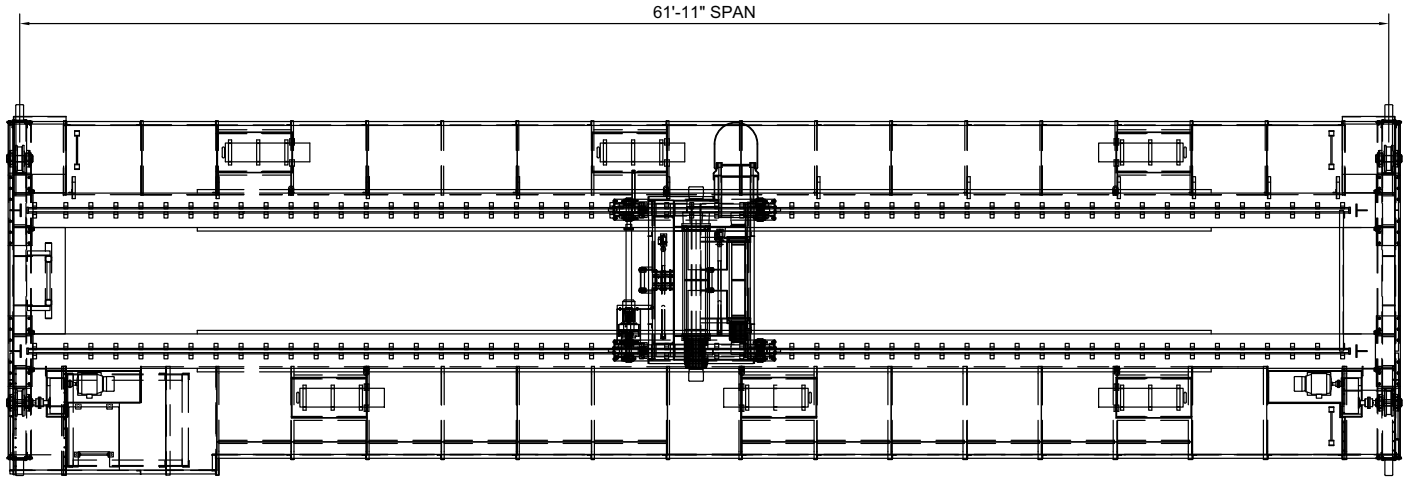

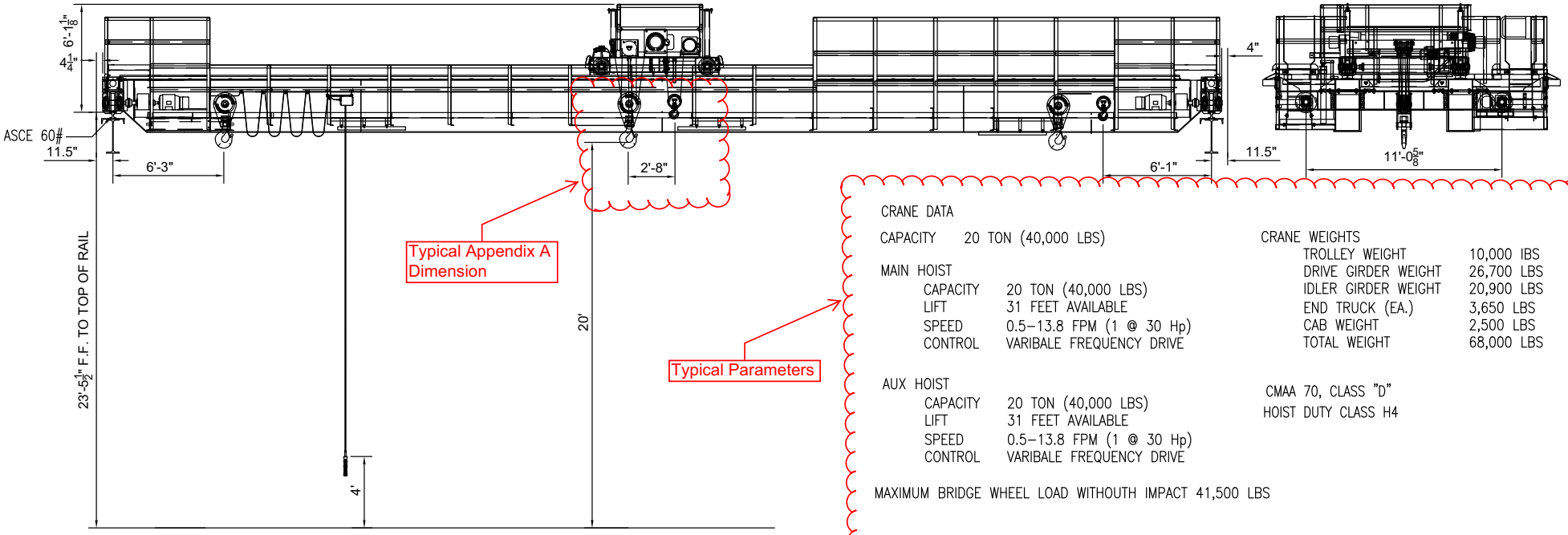

CRANE DATA

CAPACITY 20 TON (40,000 LBS)

MAIN HOIST

CAPACITY	20 TON (40,000 LBS)
LIFT	31 FEET AVAILABLE
SPEED	0.5–13.8 FPM (1 @ 30 Hp)
CONTROL	VARIBALE FREQUENCY DRIVE

AUX HOIST

CAPACITY	20 TON (40,000 LBS)
LIFT	31 FEET AVAILABLE
SPEED	0.5–13.8 FPM (1 @ 30 Hp)
CONTROL	VARIBALE FREQUENCY DRIVE

CRANE WEIGHTS

TROLLEY WEIGHT	10,000 IBS
DRIVE GIRDER WEIGHT	26,700 LBS
IDLER GIRDER WEIGHT	20,900 LBS
END TRUCK (EA.)	3,650 LBS
CAB WEIGHT	2,500 LBS
TOTAL WEIGHT	68,000 LBS

CMAA 70, CLASS "D"

HOIST DUTY CLASS H4

MAXIMUM BRIDGE WHEEL LOAD WITHOUTH IMPACT 41,500 LBS

ii. **Trolley Arrangement**

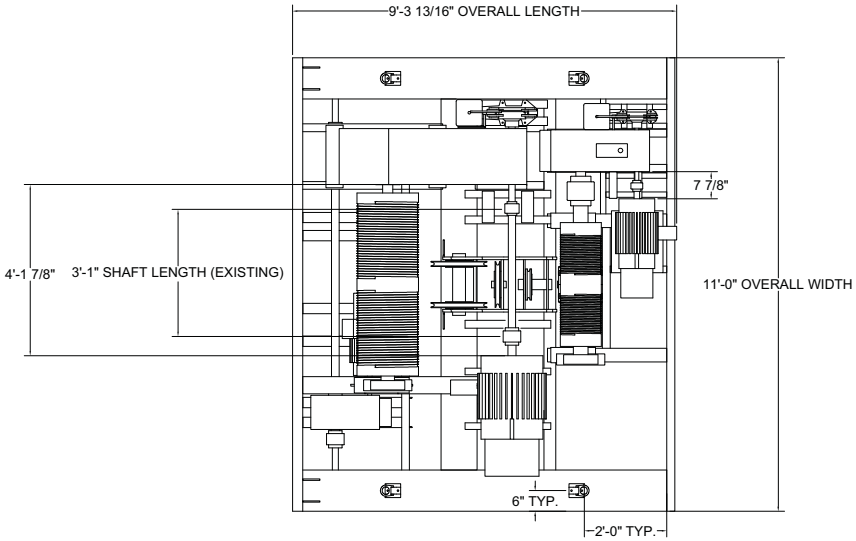
9'-3 13/16" OVERALL LENGTH
7 7/8"
4'-1 7/8"
3'-1" SHAFT LENGTH (EXISTING)
11'-0" OVERALL WIDTH
6" TYP.
2'-0" TYP.

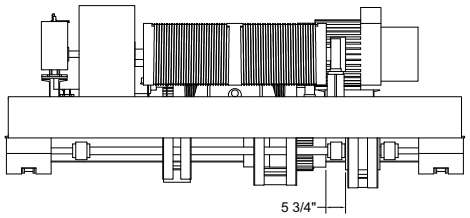
5 3/4"

VIEW A-A

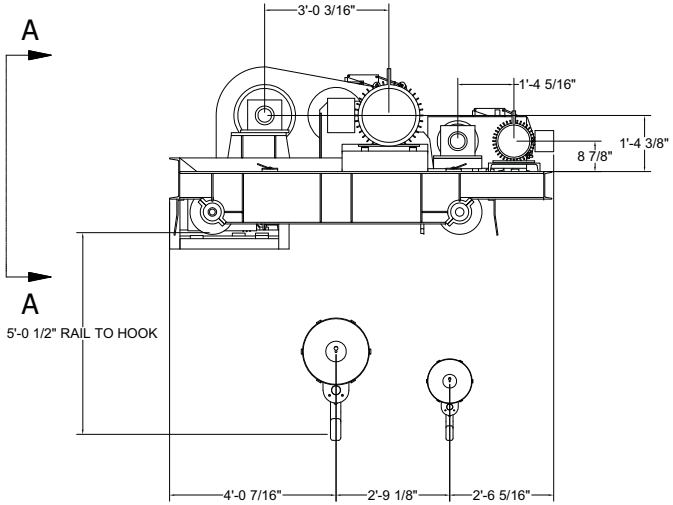
A
A
3'-0 3/16"
1'-4 5/16"
1'-4 3/8"
8 7/8"
5'-0 1/2" RAIL TO HOOK
4'-0 7/16"
2'-9 1/8"
2'-6 5/16"

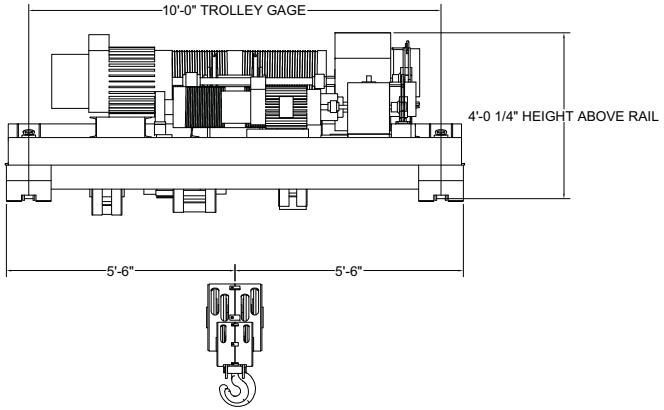
10'-0" TROLLEY GAGE
4'-0 1/4" HEIGHT ABOVE RAIL
5'-6"
5'-6"

F. Electrical Drawings

Please see the following pages for examples of electrical drawings.

ONE-LINE DIAGRAM

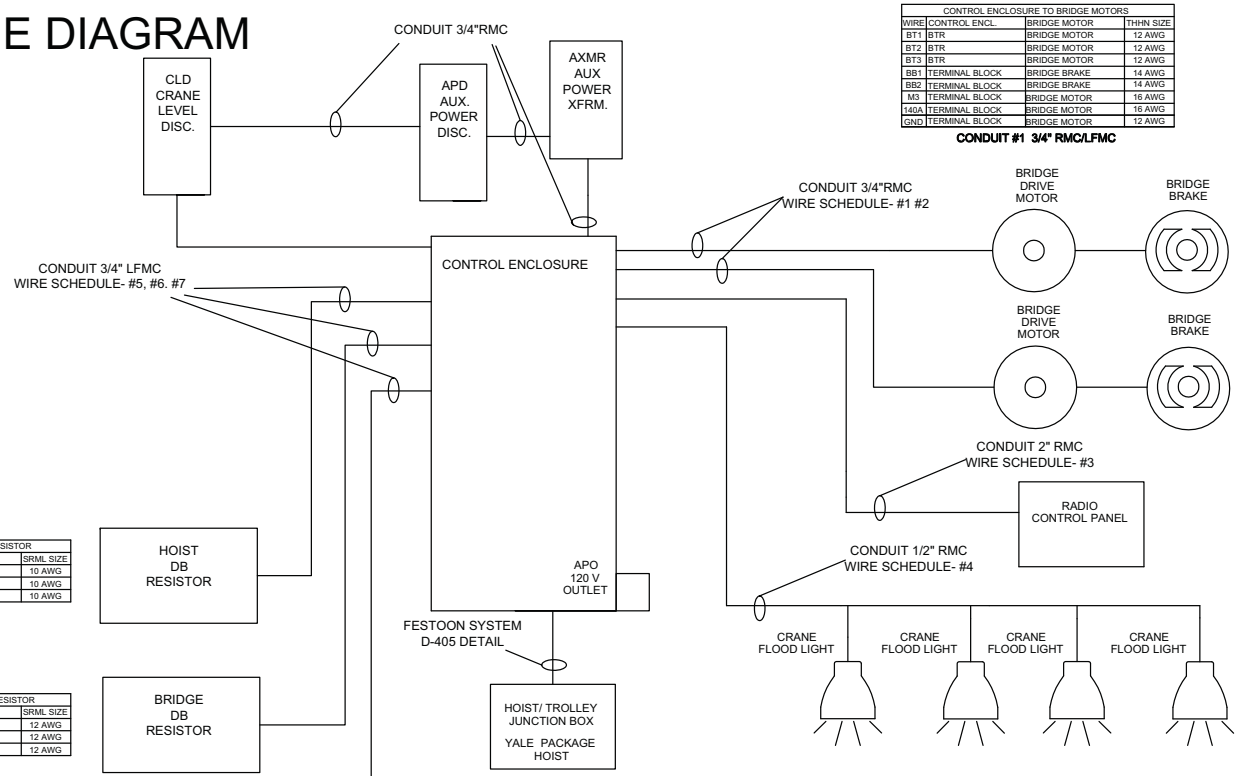

CONTROL ENCLOSURE TO BRIDGE MOTORS			
WIRE	CONTROL ENCL.	BRIDGE MOTOR	THHN SIZE
BT1	BTR	BRIDGE MOTOR	12 AWG
BT2	BTR	BRIDGE MOTOR	12 AWG
BT3	BTR	BRIDGE MOTOR	12 AWG
BB1	TERMINAL BLOCK	BRIDGE BRAKE	14 AWG
BB2	TERMINAL BLOCK	BRIDGE BRAKE	14 AWG
M3	TERMINAL BLOCK	BRIDGE MOTOR	16 AWG
140A	TERMINAL BLOCK	BRIDGE MOTOR	16 AWG
GND	TERMINAL BLOCK	BRIDGE MOTOR	12 AWG

CONDUIT #1 3/4" RMC/LFMC

CONTROL ENCLOSURE TO BRIDGE MOTORS			
WIRE	CONTROL ENCL.	BRIDGE MOTOR	THHN SIZE
BT1	BTR	BRIDGE MOTOR	12 AWG
BT2	BTR	BRIDGE MOTOR	12 AWG
BT3	BTR	BRIDGE MOTOR	12 AWG
BB1	TERMINAL BLOCK	BRIDGE BRAKE	14 AWG
BB2	TERMINAL BLOCK	BRIDGE BRAKE	14 AWG
140A	TERMINAL BLOCK	BRIDGE MOTOR	16 AWG
140	TERMINAL BLOCK	BRIDGE MOTOR	16 AWG
GND	TERMINAL BLOCK	BRIDGE MOTOR	12 AWG

CONDUIT #2 3/4" RMC/LFMC

CONTROL ENCLOSURE TO RADIO CONTROL CABINET			
WIRE	CONTROL ENCL.	RADIO PANEL DEVICE	THHN SIZE
X1A	TERMINAL BLOCK	TERMINAL BLOCK	16 AWG
M3	TERMINAL BLOCK	TERMINAL BLOCK	16 AWG
11	TERMINAL BLOCK	TERMINAL BLOCK	16 AWG
13	TERMINAL BLOCK	TERMINAL BLOCK	16 AWG
14	TERMINAL BLOCK	TERMINAL BLOCK	16 AWG
BA1	TERMINAL BLOCK	TERMINAL BLOCK	BELDEN #8770
BA2	TERMINAL BLOCK	TERMINAL BLOCK	
BSH	TERMINAL BLOCK	TERMINAL BLOCK	
101	TERMINAL BLOCK	TERMINAL BLOCK	16 AWG
111	TERMINAL BLOCK	TERMINAL BLOCK	16 AWG
TA1	TERMINAL BLOCK	TERMINAL BLOCK	BELDEN #8770
TA2	TERMINAL BLOCK	TERMINAL BLOCK	
TSH	TERMINAL BLOCK	TERMINAL BLOCK	
201	TERMINAL BLOCK	TERMINAL BLOCK	16 AWG
211	TERMINAL BLOCK	TERMINAL BLOCK	16 AWG
HA1	TERMINAL BLOCK	TERMINAL BLOCK	BELDEN #8770
HA2	TERMINAL BLOCK	TERMINAL BLOCK	
HSH	TERMINAL BLOCK	TERMINAL BLOCK	
301	TERMINAL BLOCK	TERMINAL BLOCK	16 AWG
311	TERMINAL BLOCK	TERMINAL BLOCK	16 AWG
X2	TERMINAL BLOCK	TERMINAL BLOCK	16 AWG
GND	TERMINAL BLOCK	TERMINAL BLOCK	12 AWG

CONDUIT #3 2" RMC

CONTROL ENCLOSURE TO HOIST DB RESISTOR			
WIRE	CONTROL ENCL.	RESISTOR	SRML SIZE
HR1	TERMINAL BLOCK	RESISTOR	10 AWG
HR2	TERMINAL BLOCK	RESISTOR	10 AWG
GND	TERMINAL BLOCK	RESISTOR	10 AWG

CONDUIT #5 3/4" LFMC

CONTROL ENCLOSURE TO BRIDGE DB RESISTOR			
WIRE	CONTROL ENCL.	RESISTOR	SRML SIZE
BR1	TERMINAL BLOCK	RESISTOR	12 AWG
BR2	TERMINAL BLOCK	RESISTOR	12 AWG
GND	TERMINAL BLOCK	RESISTOR	12 AWG

CONDUIT #8 3/4" LFMC

CONTROL ENCLOSURE TO TROLLEY DB RESISTOR			
WIRE	CONTROL ENCL.	RESISTOR	SRML SIZE
TR1	TERMINAL BLOCK	RESISTOR	12 AWG
TR2	TERMINAL BLOCK	RESISTOR	12 AWG
GND	TERMINAL BLOCK	RESISTOR	12 AWG

CONDUIT #7 3/4" LFMC

CONTROL ENCLOSURE TO HOIST/ TROLLEY JUNCTION			
WIRE	CONTROL ENCL.	HOIST JUNCTION	FFC
HT1	TERMINAL BLOCK	TERMINAL BLOCK	10 AWG
HT2	TERMINAL BLOCK	TERMINAL BLOCK	10 AWG
HT3	TERMINAL BLOCK	TERMINAL BLOCK	10 AWG
GND	TERMINAL BLOCK	TERMINAL BLOCK	10 AWG
HB21	TERMINAL BLOCK	TERMINAL BLOCK	12 AWG
HB22	TERMINAL BLOCK	TERMINAL BLOCK	12 AWG
HB23	TERMINAL BLOCK	TERMINAL BLOCK	12 AWG
TT1	TERMINAL BLOCK	TERMINAL BLOCK	12 AWG
TT2	TERMINAL BLOCK	TERMINAL BLOCK	12 AWG
TT3	TERMINAL BLOCK	TERMINAL BLOCK	12 AWG
TB1	TERMINAL BLOCK	TERMINAL BLOCK	12 AWG
TB2	TERMINAL BLOCK	TERMINAL BLOCK	12 AWG
M3	TERMINAL BLOCK	TERMINAL BLOCK	16 AWG
240	TERMINAL BLOCK	TERMINAL BLOCK	16 AWG
340	TERMINAL BLOCK	TERMINAL BLOCK	16 AWG
350	TERMINAL BLOCK	TERMINAL BLOCK	16 AWG
360	TERMINAL BLOCK	TERMINAL BLOCK	16 AWG
361	TERMINAL BLOCK	TERMINAL BLOCK	16 AWG
HE1	VFD TERMINAL BLOCK	TERMINAL BLOCK	BELDEN #9730 24 AWG
HE2	VFD TERMINAL BLOCK	TERMINAL BLOCK	
HE3	VFD TERMINAL BLOCK	TERMINAL BLOCK	
HE4	VFD TERMINAL BLOCK	TERMINAL BLOCK	
HE5	VFD TERMINAL BLOCK	TERMINAL BLOCK	
HE6	VFD TERMINAL BLOCK	TERMINAL BLOCK	
SHLD	VFD TERMINAL BLOCK	FLOAT	

FESTOON DIRECT TO CONTROL ENCLOSURE

CONTROL ENCLOSURE TO CRANE FLOOD LIGHTS			
WIRE	CONTROL ENCL.	FLOOD LIGHT	THHN SIZE
FL1	TERMINAL BLOCK	FLOOD LIGHT	12 AWG
FL2	TERMINAL BLOCK	FLOOD LIGHT	12 AWG
GND	TERMINAL BLOCK	FLOOD LIGHT	12 AWG

CONDUIT #4 1/2" RMC

One line diagram showing connections between all electrical components on the crane.

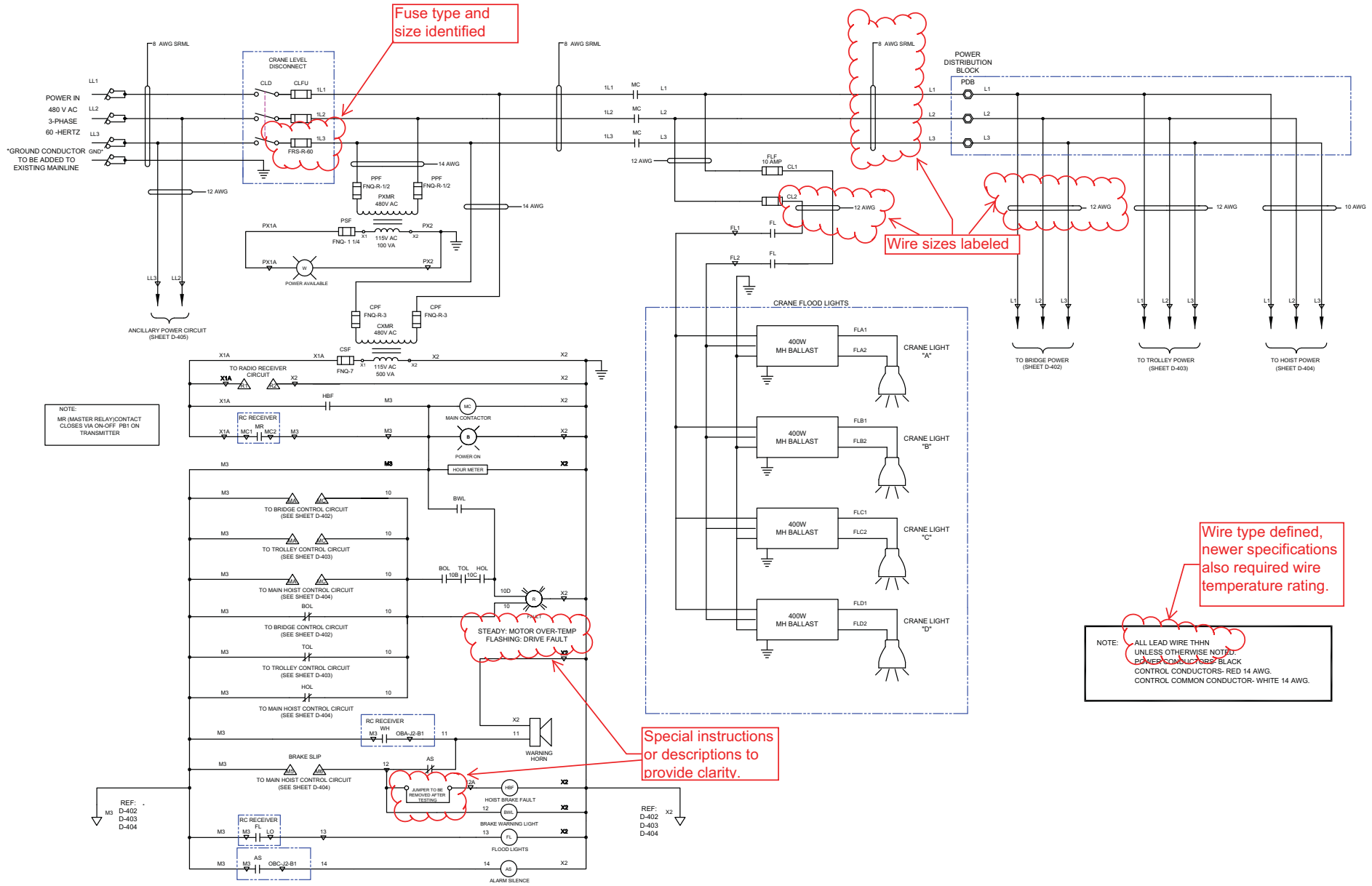
Fuse type and size identified
Wire sizes labeled
Wire type defined, newer specifications also required wire temperature rating.
Special instructions or descriptions to provide clarity.
POWER IN
480 V AC
3-PHASE
60 -HERTZ
*GROUND CONDUCTOR TO BE ADDED TO EXISTING MAINLINE
8 AWG SRML
CRANE LEVEL DISCONNECT
CLD
CLFU
FRS-R-60
12 AWG
14 AWG
10 AWG
PPF
FNQ-R-1/2
PXMR
480V AC
PSF
FNQ- 1 1/4
115V AC
100 VA
POWER AVAILABLE
CPF
FNQ-R-3
CXMR
480V AC
CSF
FNQ-7
115V AC
500 VA
ANCILLARY POWER CIRCUIT (SHEET D-405)
TO RADIO RECEIVER CIRCUIT
RC RECEIVER
MAIN CONTACTOR
POWER ON
HOUR METER
TO BRIDGE CONTROL CIRCUIT (SEE SHEET D-402)
TO TROLLEY CONTROL CIRCUIT (SEE SHEET D-403)
TO MAIN HOIST CONTROL CIRCUIT (SEE SHEET D-404)
STEADY: MOTOR OVER-TEMP
FLASHING: DRIVE FAULT
WARNING HORN
BRAKE SLIP
JUMPER TO BE REMOVED AFTER TESTING
HOIST BRAKE FAULT
BRAKE WARNING LIGHT
FLOOD LIGHTS
ALARM SILENCE
NOTE:
MR (MASTER RELAY)CONTACT CLOSES VIA ON-OFF PB1 ON TRANSMITTER
REF: D-402 D-403 D-404
POWER DISTRIBUTION BLOCK
PDB
FLF
10 AMP
CRANE FLOOD LIGHTS
400W MH BALLAST
CRANE LIGHT "A"
CRANE LIGHT "B"
CRANE LIGHT "C"
CRANE LIGHT "D"
TO BRIDGE POWER (SHEET D-402)
TO TROLLEY POWER (SHEET D-403)
TO HOIST POWER (SHEET D-404)
NOTE:
ALL LEAD WIRE THHN
UNLESS OTHERWISE NOTED:
POWER CONDUCTORS- BLACK
CONTROL CONDUCTORS- RED 14 AWG.
CONTROL COMMON CONDUCTOR- WHITE 14 AWG.

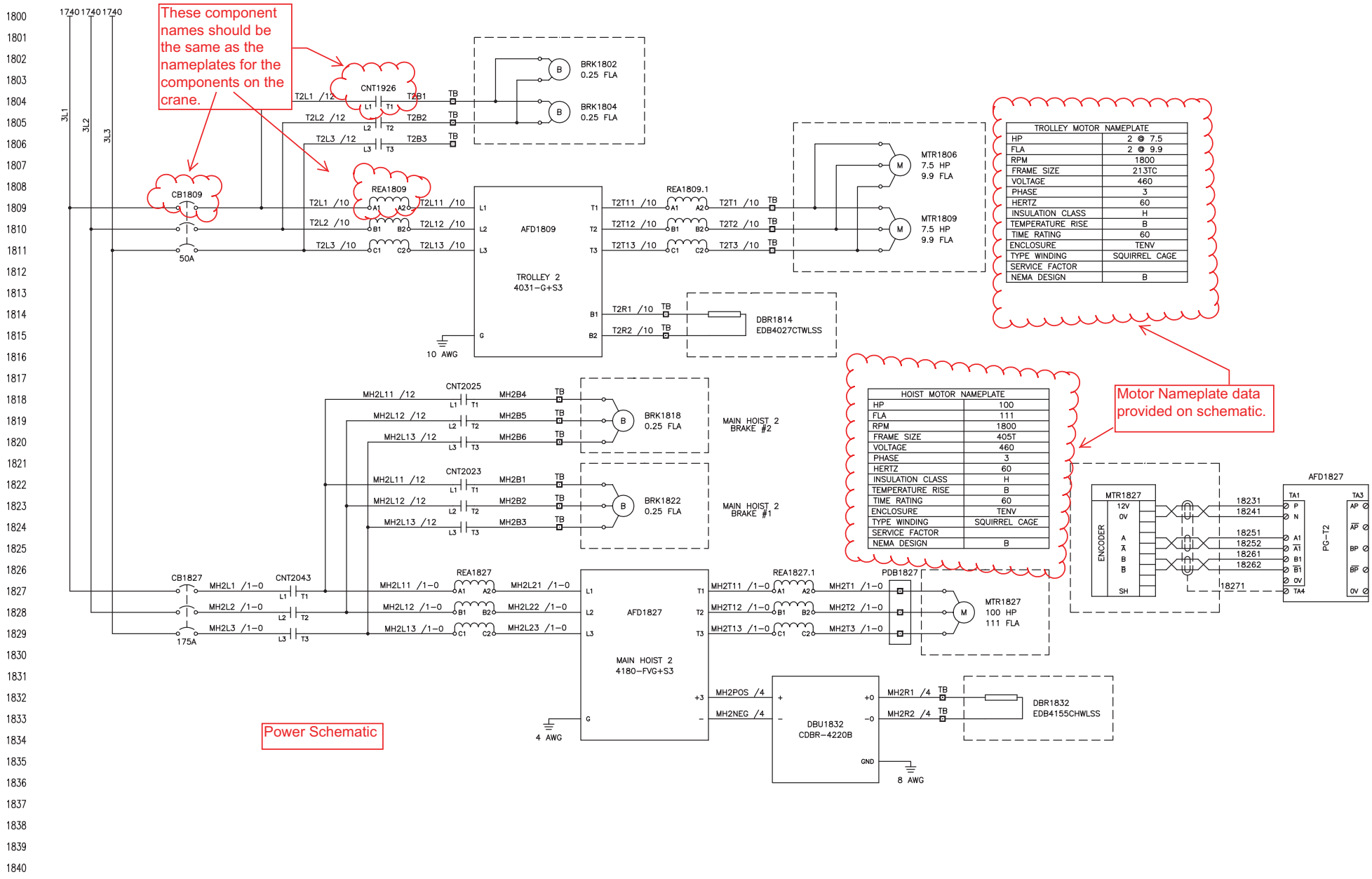

TROLLEY MOTOR NAMEPLATE	
HP	2 @ 7.5
FLA	2 @ 9.9
RPM	1800
FRAME SIZE	213TC
VOLTAGE	460
PHASE	3
HERTZ	60
INSULATION CLASS	H
TEMPERATURE RISE	B
TIME RATING	60
ENCLOSURE	TENV
TYPE WINDING	SQUIRREL CAGE
SERVICE FACTOR	
NEMA DESIGN	B

HOIST MOTOR NAMEPLATE	
HP	100
FLA	111
RPM	1800
FRAME SIZE	405T
VOLTAGE	460
PHASE	3
HERTZ	60
INSULATION CLASS	H
TEMPERATURE RISE	B
TIME RATING	60
ENCLOSURE	TENV
TYPE WINDING	SQUIRREL CAGE
SERVICE FACTOR	
NEMA DESIGN	B

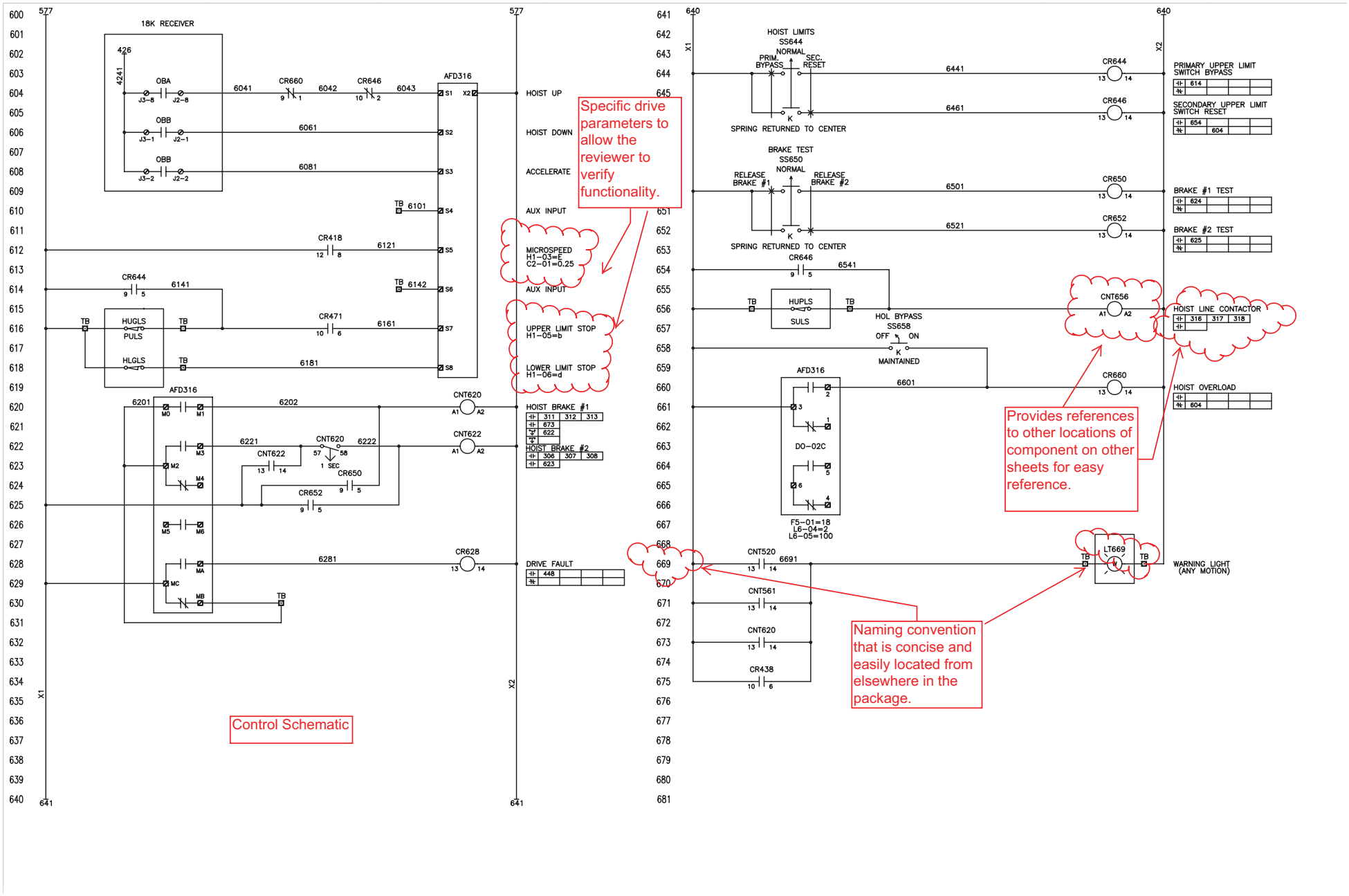
18K RECEIVER
AFD316
HOIST UP
HOIST DOWN
ACCELERATE
AUX INPUT
MICROSPEED
H1-03=E
C2-01=0.25
AUX INPUT
UPPER LIMIT STOP
H1-05=b
LOWER LIMIT STOP
H1-06=d
HOIST BRAKE #1
HOIST BRAKE #2
DRIVE FAULT
HOIST LIMITS
SS644
NORMAL
PRIM BYPASS
SEC. RESET
SPRING RETURNED TO CENTER
PRIMARY UPPER LIMIT SWITCH BYPASS
SECONDARY UPPER LIMIT SWITCH RESET
BRAKE TEST
SS650
RELEASE BRAKE #1
RELEASE BRAKE #2
BRAKE #1 TEST
BRAKE #2 TEST
HUPLS
SULS
HOL BYPASS
SS658
OFF
ON
MAINTAINED
HOIST LINE CONTACTOR
HOIST OVERLOAD
DO-02C
F5-01=18
L6-04=2
L6-05=100
WARNING LIGHT (ANY MOTION)
Specific drive parameters to allow the reviewer to verify functionality.
Provides references to other locations of component on other sheets for easy reference.
Naming convention that is concise and easily located from elsewhere in the package.
Control Schematic

PUSHBUTTON LAYOUT

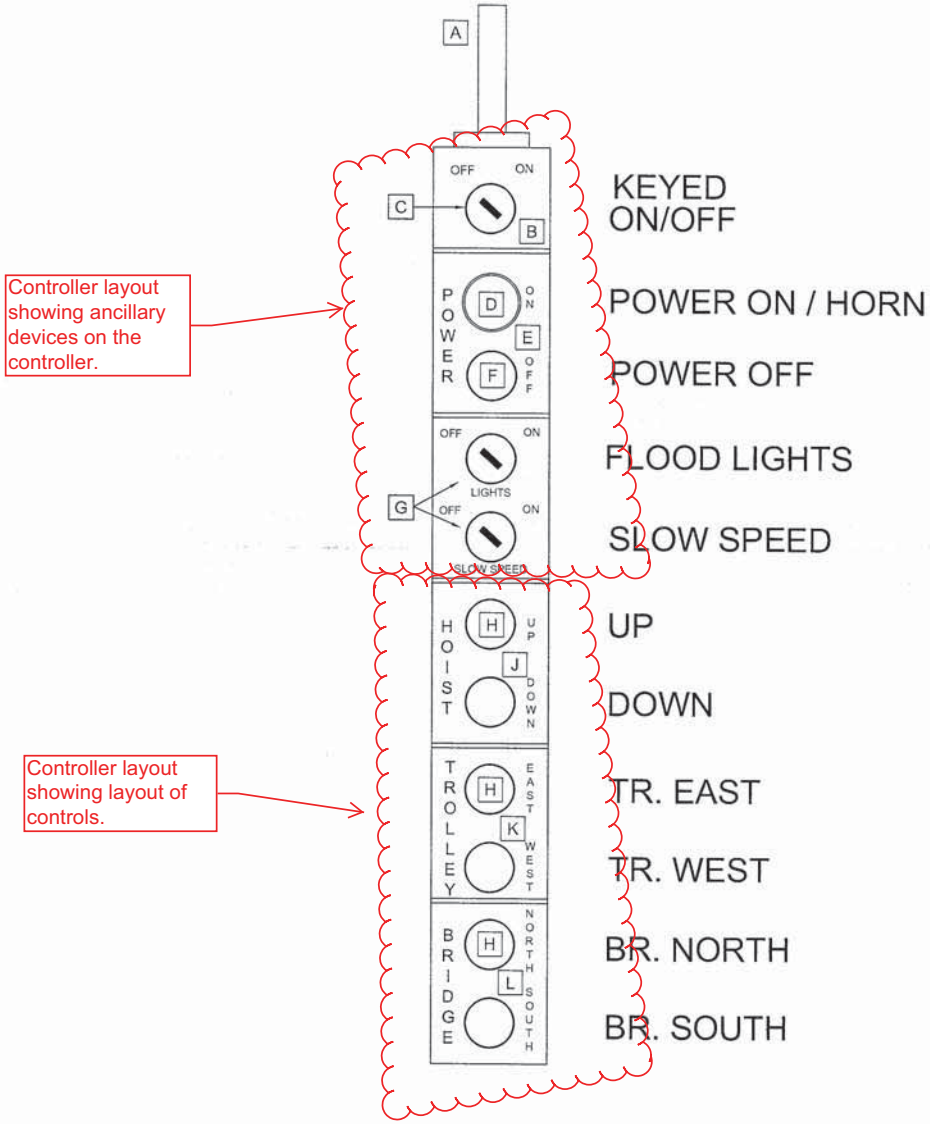

ITEM	QTY	DESCRIPTION	MANUFACTURER
A	1	STAINLESS STEEL MESH KELLEM -074011251	HUBBELL
B	1	PENDANT STATION ENCLOSURE- 10 BUTTON SKYP10	SQUARE D
C	1	KEYED ON OFF SWITCH- 800T-J41A	ALLEN BRADLEY
D	1	MOMENTARY PUSHBUTTON BLACK FLUSH HEAD 800T-A2A	ALLEN BRADLEY
E	1	LEGEND PLATE POWER: ON-OFF SKN211	SQUARE D
F	1	MAINTAINED PUSHBUTTON RED MUSHROOM HEAD 800T-FXT6A1	ALLEN BRADLEY
G	2	MAINTAINED LEVER SWITCH -2 POSITION 800T-H2D1	ALLEN BRADLEY
H	3	THREE SPEED WITH MOMENTARY INTERLOCK SKRU3	SQUARE D
J	1	LEGEND PLATE HOIST UP DOWN SKN201	SQUARE D
K	1	LEGEND PLATE TROLLEY EAST WEST SKN202	SQUARE D
L	1	LEGEND PLATE BRIDGE NORTH SOUTH SKN207	SQUARE D

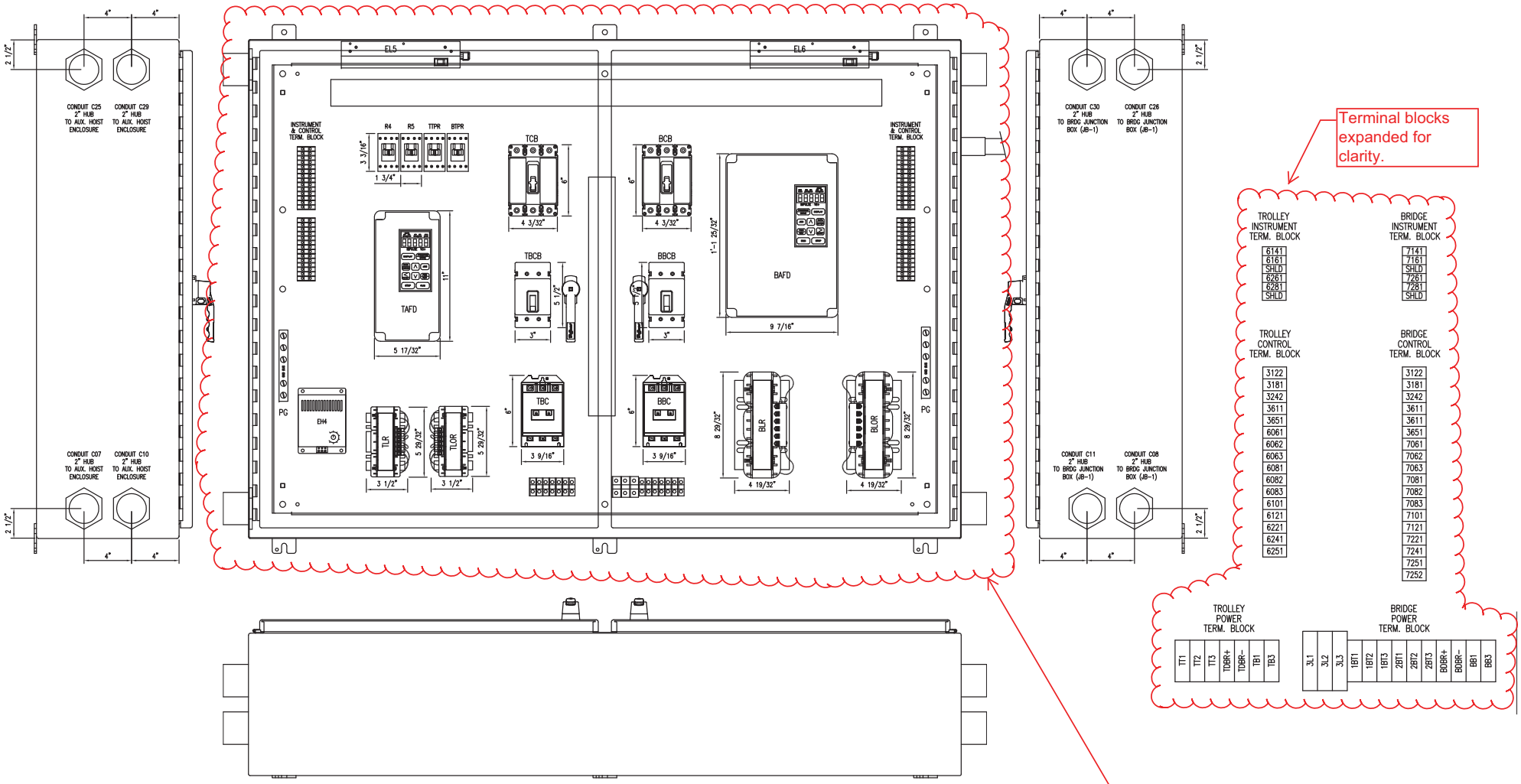

TROLLEY / BRIDGE ENCL.
HOFFMAN A42H6012WFSSALP3PT
HOFFMAN A60BFP42 PANEL

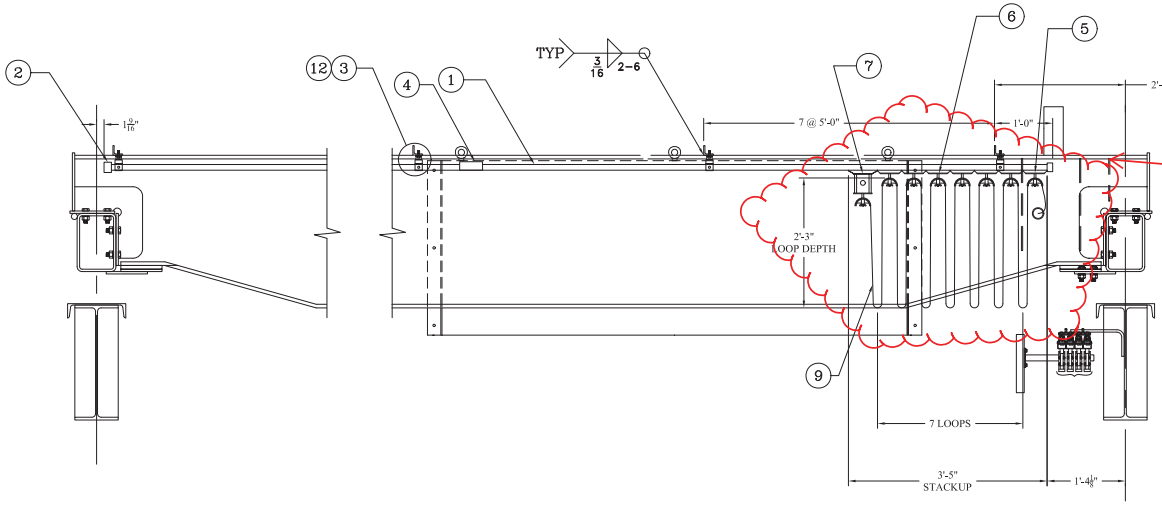

Festoon layout showing components and loop depth.

Festoon conductors used in festoon system.

BILL OF MATERIALS					
ITEM	NO. REQ'D.	DESCRIPTION	MAT'L.	REMARKS	TOT. WT. LBS
1	4	DUCT-O-WIRE CHANNEL, 10' LGTH	.	DUCT-O-WIRE	.
2	2	END CAP, FC-CH1GC	.	DUCT-O-WIRE	.
3	8	HANGER ASSY, FC-CH1F-1	.	DUCT-O-WIRE	.
4	3	TRACK JOINT ASSY, FC-CH1D	.	DUCT-O-WIRE	.
5	1	END CLAMP/SADDLE ASSY, FC-CS1	.	DUCT-O-WIRE	.
6	6	INTERMEDIATE TROLLEY, FC-TR-1	.	DUCT-O-WIRE	.
7	1	TOW TROLLEY, FC-TRT1	.	DUCT-O-WIRE	.
8	1	2" x 2" x 1/4" x 3'-0"	.	.	.
9	65FT	FC-48, 4C, 8 AWG (2) FC-812, 8C, 12 AWG FC-816, 8C, 16 AWG BELDEN 9388 SHIELDED CABLE	FLAT CABLE TWISTED PAIR	DUCT-O-WIRE	.
10	2	CONNECTORS: (1) FC-48C (1) FC-812C2 (1) FC1216C		DUCT-O-WIRE	.
11	1	HOIST CONTROL BOX	.	MAGNETEK	.
12	8	TRACK SUPPORTS, L 2" x 2" x 1/4" x 9"		SEE DETAIL	.
13	1	Ø3/4" x 9" BAR		.	

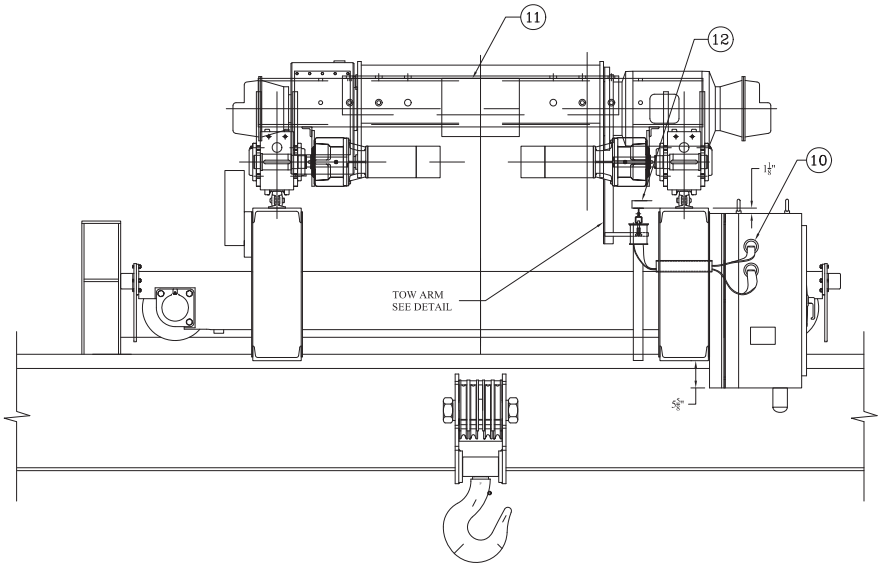

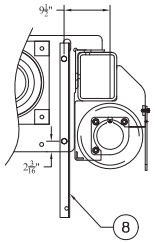

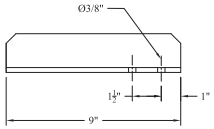

TRACK SUPPORT

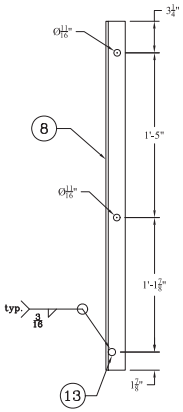

TOW ARM DETAIL

G. Mechanical Drawings

Please see the following page for a sample mechanical drawing.

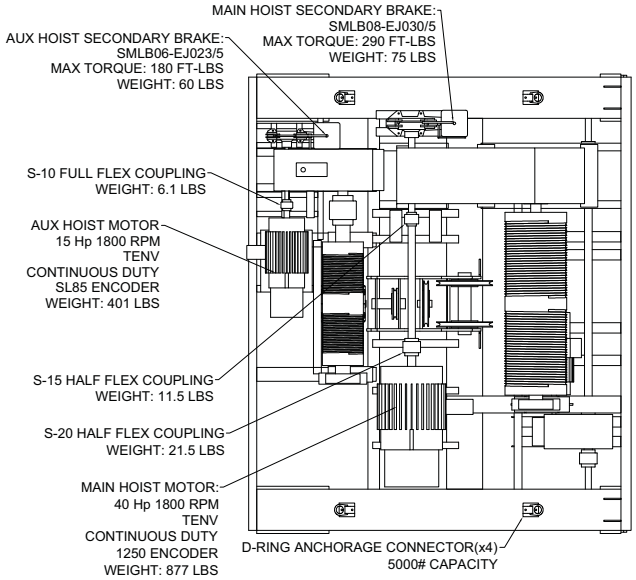

COMPONENTS	BOLT SIZE	TORQUE VALUE
TROLLEY MOTOR	3/8" GR. 8	46 FT-LBS
MAIN HOIST MOTOR	5/8" GR. 8	225 FT-LBS
AUX HOIST MOTOR	1/2" GR. 8	113 FT-LBS
MAIN HOIST SECONDARY BRAKE	5/8" GR. 8	225 FT-LBS
AUX SECONDARY BRAKE	3/8" GR. 8	46 FT-LBS

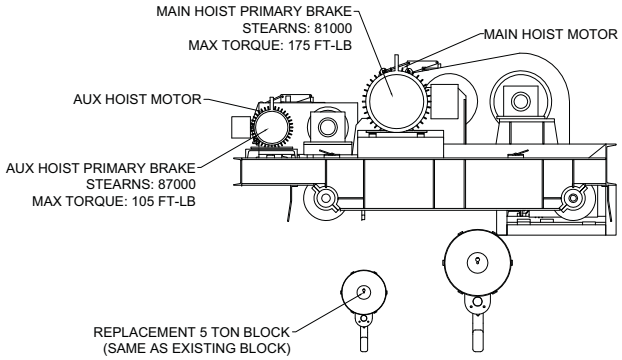

Trolley Component Layout

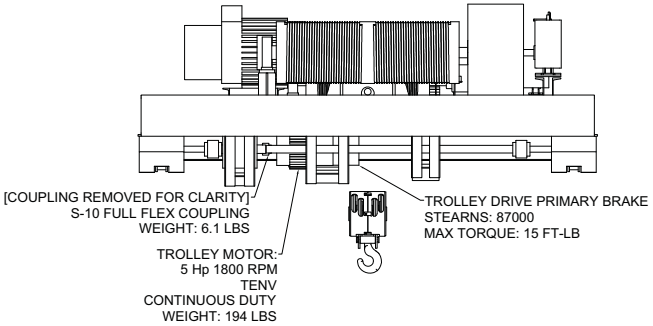

H. Structural Drawings

See following pages for sample structural drawings.

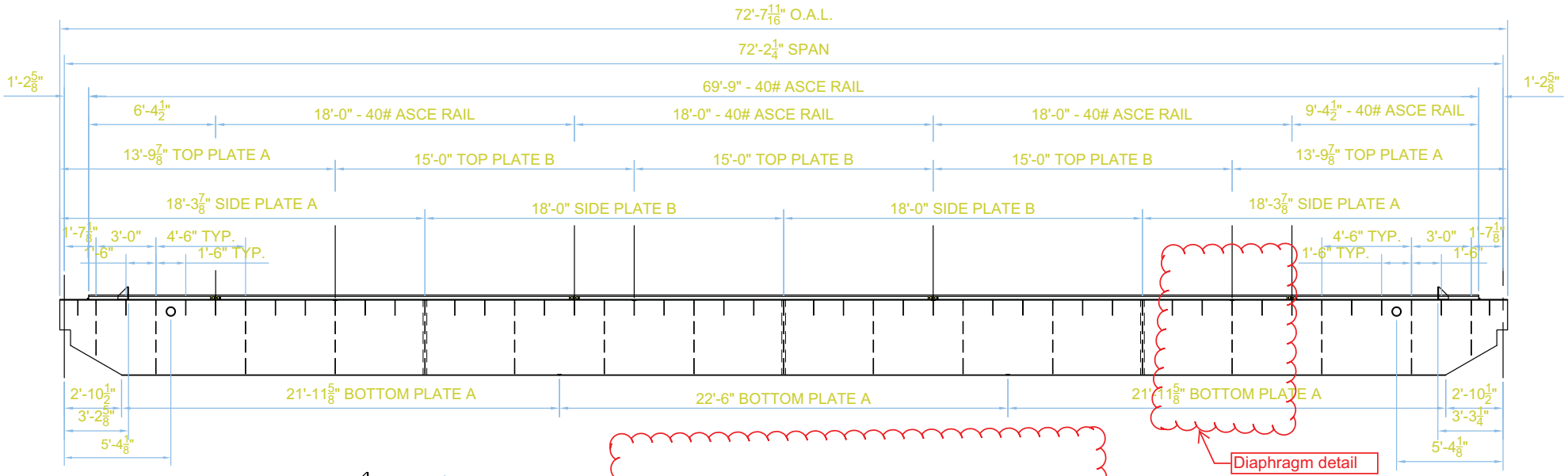
72'-7 11/16" O.A.L.
72'-2 1/4" SPAN
1'-2 5/8"
69'-9" - 40# ASCE RAIL
6'-4 1/2"
18'-0" - 40# ASCE RAIL
18'-0" - 40# ASCE RAIL
18'-0" - 40# ASCE RAIL
9'-4 1/2" - 40# ASCE RAIL
13'-9 7/8" TOP PLATE A
15'-0" TOP PLATE B
15'-0" TOP PLATE B
15'-0" TOP PLATE B
13'-9 7/8" TOP PLATE A
18'-3 7/8" SIDE PLATE A
18'-0" SIDE PLATE B
18'-0" SIDE PLATE B
18'-3 7/8" SIDE PLATE A
1'-7 1/8"
3'-0"
4'-6" TYP.
1'-6"
1'-6" TYP.
4'-6" TYP.
3'-0"
1'-7 1/8"
1'-6" TYP.
1'-6"
2'-10 1/2"
21'-11 5/8" BOTTOM PLATE A
22'-6" BOTTOM PLATE A
21'-11 5/8" BOTTOM PLATE A
2'-10 1/2"
3'-2 5/8"
3'-3 1/4"
5'-4 1/8"
5'-4 1/8"
Diaphragm detail

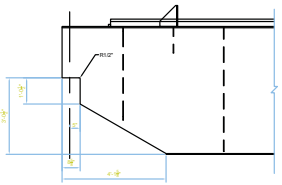

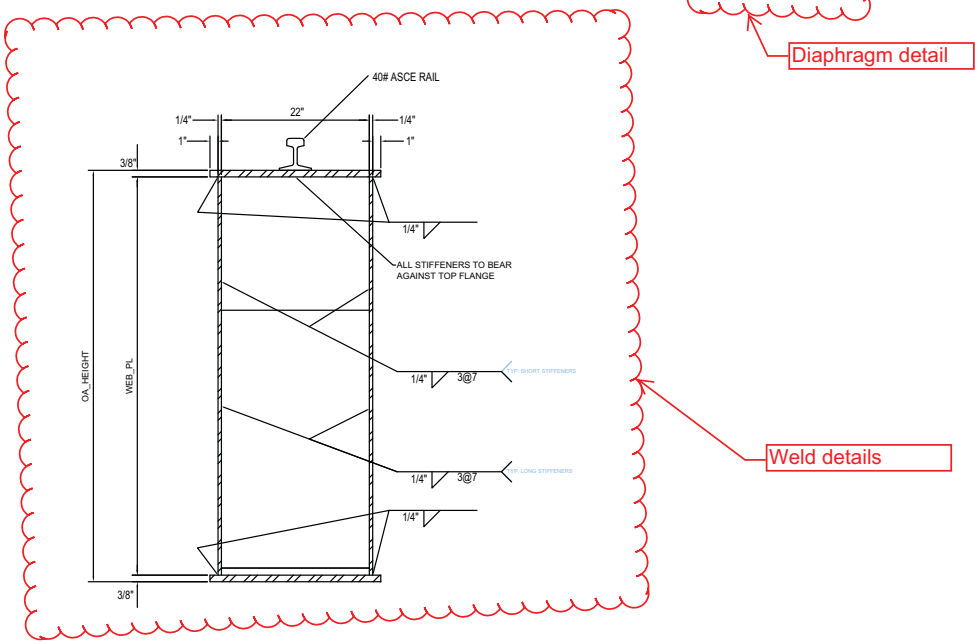
40# ASCE RAIL
22"
1/4"
1/4"
1"
1"
3/8"
1/4"
ALL STIFFENERS TO BEAR
AGAINST TOP FLANGE
OA_HEIGHT
WEB_PL
1/4"
3@7
TYP. SHORT STIFFENERS
1/4"
3@7
TYP. LONG STIFFENERS
1/4"
3/8"
Weld details

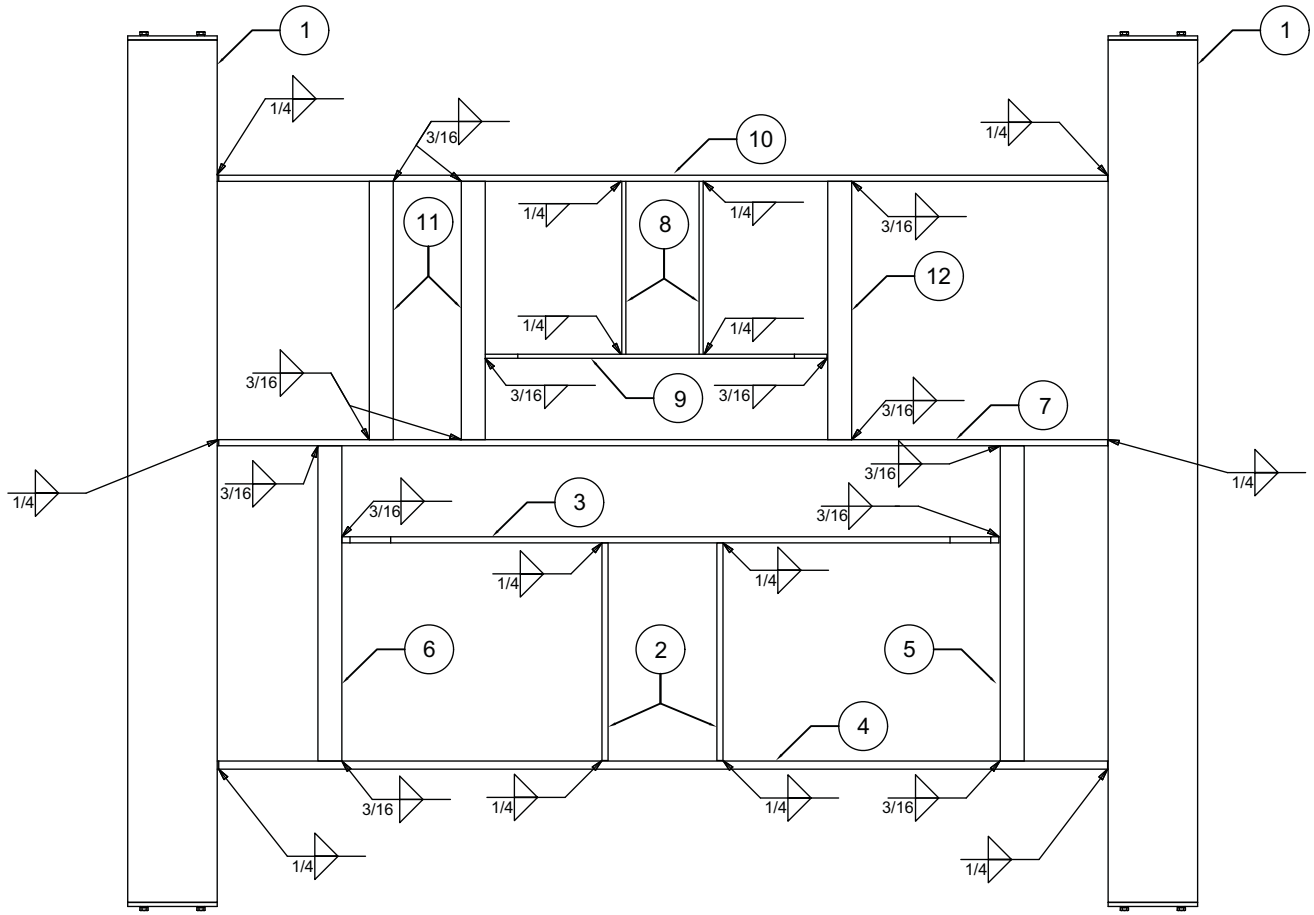

TROLLEY FRAME COMPONENTS			
NUMBER	COMPONENT	PRODUCT	QTY
1	EC-320-90 END TRUCK	EC-320-90 END TRUCK	2
2	MAIN UPPER NEST LOAD PLATE	3/4" PLATE x 27 1/2" x 15"	2
3	MAIN DRUM LOAD PLATE	3/4" PLATE x 15" x 80 7/8"	1
4	MAIN OUTER LOAD PLATE	1" PLATE x 15 1/2" x 111 1/2"	1
5	MAIN GEARCASE SUPPORT	C12 x 20.7# / 39 1/2"	1
6	MAIN DRUM TAIL SUPPORT	C12 x 20.7# / 39 1/2"	1
7	MIDDLE LOAD PLATE	3/4" PLATE x 15" x 111 1/2"	1
8	AUX UPPER NEST LOAD PLATE	1/2" PLATE x 9" x 21 1/4"	2
9	AUX DRUM LOAD PLATE	1/2" PLATE x 10" x 42"	1
10	AUX OUTER LOAD PLATE	3/4" PLATE x 15" x 111 1/2"	1
11	AUX GEARCASE SUPPORT	C12 x 20.7# / 31 3/4"	2
12	AUX DRUM TAIL SUPPORT	C12 x 20.7# / 31 3/4"	1

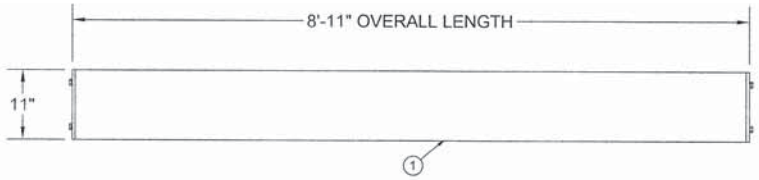

TROLLEY#1 END TRUCK DETAILS					
NUMBER	COMPONENT	MANUFACTURER	PRODUCT	QTY	WEIGHT
1	TOP PLATE	MCB	1/2" FLAT x 11" x 106" / A36	1	118 LBS
2	SIDE PLATE	MCB	1/2" FLAT x 15" x 106" / A36	2	161 LBS
3	BOTTOM PLATE	MCB	1/2" FLAT x 11" x 73 1/4" / A36	1	63 LBS
4	SWEEP PLATE	MCB	1/2" FLAT x 11 x 16" / A36	2	25 LBS
5	DIAPHRAGM	MCB	1/2" FLAT x 8" x 14 3/4" / A36	5	17 LBS
6	SWEEP MOUNT PLATE	MCB	1" SQR. BAR x 7" / A36	4	2 LBS
7	SWEEP BOLT	---	1/2 - 13 UNC HHCS x 1 3/4" / GR. 5	12	---
8	WASHER	---	1/2 LW	12	---
9	IDLE BEARING CAP	MCB	9 3/4" O.D. x 1 3/4" THICK / 1018HR	2	20 LBS
10	DRIVE BEARING CAP	MCB	9 3/4" O.D. x 2 1/4" THICK / 1018HR	2	20 LBS
11	WHEEL BEARING	SKF	22216 SPHERICAL ROLLER	4	5 LBS
12	IDLE AXLE	MCB	3 7/16" DIA. x 8" / 1045 CR	1	20 LBS
13	WHEEL	MCB	14 3/4" O.D. x 5" THICK / 1018HR	2	205 LBS
14	AXLE KEY	---	7/8" SQR. BAR x 4" / 1018CR	2	1 LB
15	WHEEL BOLT	---	5/8 - 11 UNC HHCS x 1 1/2" / GR. 5	16	---
16	WHEEL	---	5/8 LW	16	---

NOTE
- ONE (1) TROLLEY ENDTRUCK SHALL HAVE (3) IDLE BEARING CAPS AND (1) DRIVE BEARING CAP
- ONE (1) TROLLEY ENDTRUCK SHALL HAVE (2) IDLE BEARING CAPS AND (2) DRIVE BEARING CAPS
- THIS WILL ACCOMODATE THE TROLLEY CROSS SHAFT THAT RUNS BETWEEN THE TWO ENDTRUCKS

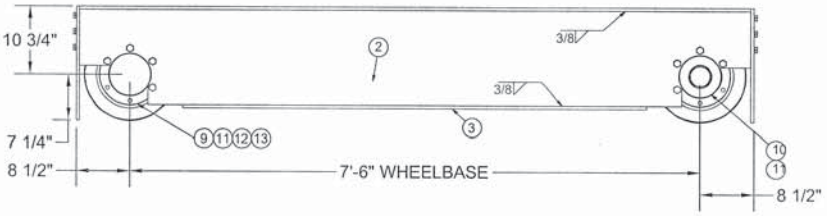

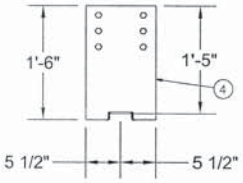

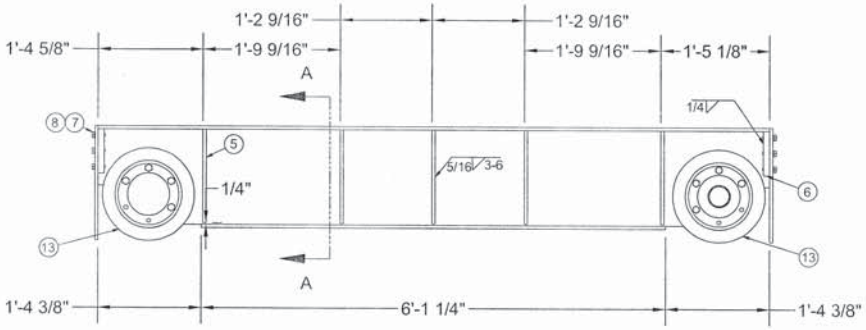

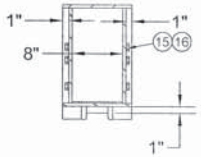

SECTION A-A

I. Mechanical Product Data

Please see the following pages for examples of mechanical product data.

i. **Brakes**

Series 87,100 (1-087-1XX)

Mounting Face: NEMA 284TC, 284UC, 286TC and 286UC 10.5” AK, 9.0” AJ

Static Torque: 50 through 105 lb-ft

Enclosure Material: NEMA 2 - Sheet Metal Housing, Cast Iron Endplate. NEMA 4 - Cast Iron Housing and Endplate

Release Type: Knob, maintained with automatic reset. Vertical above NEMA 4 supplied with side release lever. All NEMA 4X supplied with side release lever.

Enclosure Protection: NEMA 2, IP 23 and NEMA 4, IP 54

Installation, Service and Parts List: P/N 8-078-928-01 *Rev. B brakes*

Specifications including bore sizes/voltages: Page 17

Modifications: Pages 47-56

Including New Manual Adjust Option

Modifications required for vertical mounting. Vertical above NEMA 4/4X includes side release lever. See SAB Modification Section for list price adders.

Brake set and release times in milliseconds, when brake and motor are switched separately (for T1/T2 definitions, see page 94):

Static Torque	Coil Size	T1	T2
50	6	42	20
35, 75, 105	8	48	20

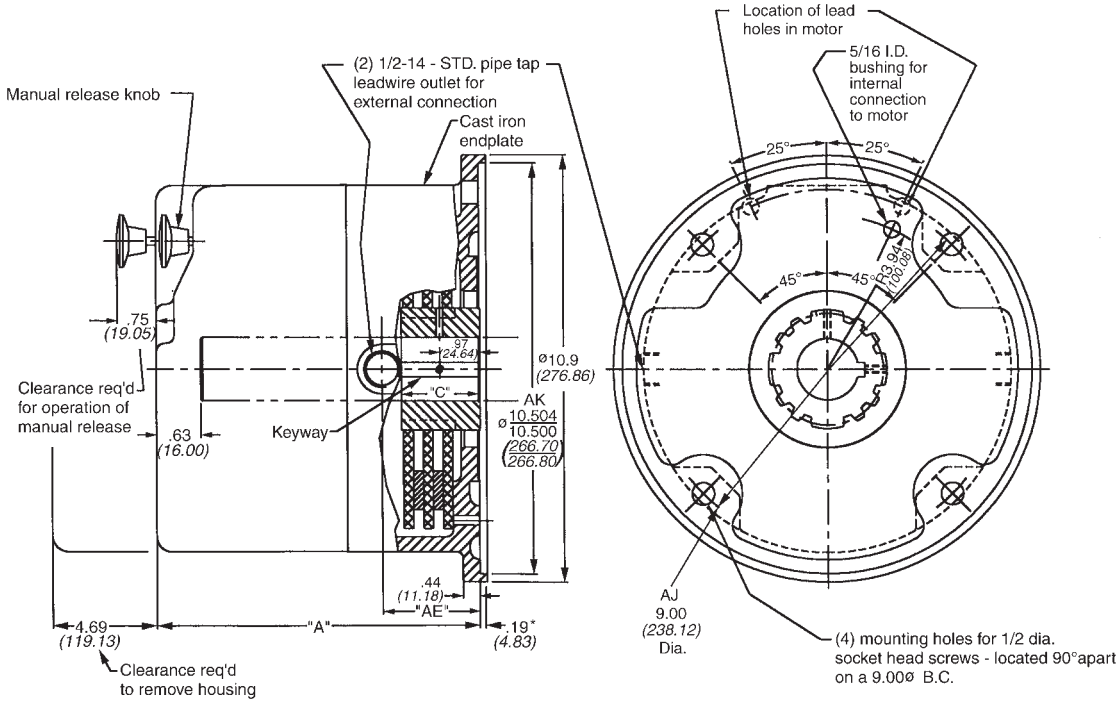

* Hub location

Dimensions for estimating only. For installation purposes request certified prints.

Dimensional Data/Unit Pricing (Discount Symbol B3)

Nominal Static Torque (lb-ft) (Nm)	Enclosure	Basic Model Number and List Price*				Dimensions in Inches (Dimensions in Millimeters)					Wt. lbs (kg)
		AC	AC List Price*	DC	DC List Price*	A	AE	AG	C	H	
50	NEMA 2	1-087-151-00	$1,600.00	1-087-155-00	$2,170.00	7.75 (196.85)	2.19 (55.56)	.97 (24.61)	1.50 (38.10)	4.69 (119.06)	33 (14.9)
50	NEMA 4	1-087-152-00	2,200.00	1-087-156-00	2,770.00	7.94 (201.68)	2.19 (55.56)	.97 (24.61)	1.50 (38.10)	4.62 (117.48)	49 (22.2)
75	NEMA 2	1-087-161-00	2,100.00	1-087-165-00	2,670.00	7.75 (196.85)	2.19 (55.56)	.97 (24.61)	1.50 (38.10)	4.69 (119.06)	36 (16.3)
75	NEMA 4	1-087-162-00	2,700.00	1-087-166-00	3,270.00	7.94 (201.68)	2.19 (55.56)	.97 (24.61)	1.50 (38.10)	4.62 (117.48)	52 (23.6)
105	NEMA 2	1-087-181-00	2,800.00	1-087-185-00	3,370.00	8.25 (209.55)	2.69 (68.26)	.97 (24.61)	2.00 (50.80)	4.69 (119.06)	42 (19.1)
105	NEMA 4	1-087-182-00	3,400.00	1-087-186-00	3,970.00	8.44 (214.31)	2.69 (68.26)	.97 (24.61)	2.00 (50.80)	4.62 (117.48)	56 (25.4)

Main Hoist

* Subtract $45.00 for brake ordered less hub.

Series 56,000; 56,100; 56,200; 56,300; 56,400; 56,500; 56,600; 56,700; and 56,900

Mounting Face: NEMA 56C, 143TC and 145TC

The 56,X00 Series have the following design features:

- Adjustable Torque, down to 50% of rated nameplate torque
- Manual Wear Adjustment
- Visual Wear Indicator
- Splined Hub
- Spring-Set Electrically Released
- Lead Wire Length: 24 inches
- Maximum Speed:
  Horizontal 5000 rpm
  Vertical 3600 rpm
- Coil Insulation: Standard Class B
  Optional Class H
  (56,800 Series Class H standard)
- Certified: CSA File LR-6254
- ABS Type Approval Certified

Engineering Specifications

Maximum Solenoid Cycle Rate: ①

AC 36 cycles/min
DC 10 cycles/min

Thermal Capacity: ②

Horizontal 9 hp-sec/min *(112 watts)*
Vertical 6.5 hp-sec/min *(80 watts)*

① Maximum solenoid cycle rate is based on ambient temperature of 72°F *(22°C)* with 50% duty cycle. Does not relate to brake cycle rate (see Thermal Capacity).

② Thermal capacity rating is based on ambient temperature of 72°F *(22°C)*, stop time of one second or less, with no heat absorbed from motor. Refer to *Selection Procedure* Section.

Series 56,000; 56,100; 56,300; 56,500; and 56,700

Nominal Static Torque	Number of Friction Discs	Coil Size		Inertia (WK^2)
lb-ft *(Nm)*		AC	DC	lb-ft^2 *(kgm^2 x 10^{-4})*
1.5-3 *(2-4)*	1	4	4+	.008 *(3.36)*
6 *(8)*	1	K4	K4+	.008 *(3.36)*
10 *(14)*	2	K4	K4+	.014 *(5.88)*
15 *(20)*	2	K4+	M4+	.014 *(5.88)*
20 *(27)*	3	K4+	M4+	.020 *(8.40)*
25 *(34)*	3	M4+	P4+	.020 *(8.40)*

Trolley

Bridge

Series 56,200; 56,400; 56,600; and 56,900

Nominal Static Torque	No. of Friction discs	Coil Size		Inertia (WK^2)
lb-ft *(Nm)*		AC	DC	lb-ft^2 *(kgm^2 x 10^{-4})*
3-6 *(4-8)*	2	4	4+	.014 *(5.88)*
10 *(14)*	2	K4	K4+	.014 *(5.88)*
15 *(20)*	2	K4+	M4+	.014 *(5.88)*
20 *(27)*	3	K4+	M4+	.020 *(8.40)*
25 *(34)*	3	M4+	P4+	.020 *(8.40)*

Current Ratings (amperes)

Solenoid Coil Size*	AC Current	Voltage: 60 Hz						Voltage: 50 Hz			Voltage: DC			
		115	200	230	400	460	575	110	220	380	24	95	115	230
4	Inrush Holding	3.6 .3	2.1 .2	1.8 .2	1.1 .08	.9 .08	.7 .06	4.1 .3	2.1 .2	.9 .08	13.3 .3	3.6 .1	2.8 .05	1.5 .03
4+	Inrush Holding	–	–	–	–	–	–	–	–	–	20.5 .5	4.7 .1	3.7 .08	2.0 .04
K4	Inrush Holding	4.3 .3	2.5 .2	2.2 .2	1.3 .1	1.1 .08	.9 .07	4.9 .4	2.4 .2	1.1 .08	17.5 .4	4.7 .1	3.7 .08	2.0 .04
K4+	Inrush Holding	4.6 .4	2.5 .2	2.3 .2	1.2 .1	1.0 .1	.9 .08	4.6 .4	2.0 .2	1.0 .0	20.5 .5	7.5 .1	5.5 .08	2.0 .04
M4	Inrush Holding	3.0 .6	1.7 .3	1.5 .3	.9 .2	.8 .1	.6 .21	–	–	.8 .1	–	–	–	–
M4+	Inrush Holding	4.6 .4	2.5 .2	2.3 .2	1.2 .1	1.0 .1	.9 .08	4.6 .4	2.0 .2	1.3 .1	30.3 .5	7.9 .1	5.5 .08	2.0 .04
P4+	Inrush Holding	–	–	–	–	–	–	–	–	–	30.3 .5	11.3 .1	8.4 .08	3.0 .04

Motor Frame Adapters: Series 56,000 through 56,600

WARNING! Before selecting an adapter to mount a brake on a larger motor frame, the torque and thermal capacity required by the application should be determined as shown in the "Selection Procedure" section. A larger motor may indicate a requirement for greater thermal capacity than the brake is designed for. The brake selection must be matched to the motor and application requirements, before use of an adapter is considered.

To Adapt to NEMA Frame Size	AK Dim. in. *(mm)*	Reg. No.	Brake Enclosure ①	Brake Torque	Adapter Stock Number	Additional Shaft Length Required in. *(mm)*
182TC 184TC 213TC 215TC 254TC 256TC	8.50 *(215.90)*	-9	NEMA 2	1.5-15	5-55-5041-00 List $700.00	.94 *(23.81)*
	8.50 *(215.90)*	-9	NEMA 4 NEMA 4X	1.5-6	5-55-5041-00 List $700.00	.94 *(23.81)*
	8.50 *(215.90)*	-9	NEMA 2	20 & 25	5-55-5043-00 List $700.00	.94 *(23.81)*
	8.50 *(215.90)*	-9	NEMA 4 NEMA 4X	10-25	5-55-5043-00 List $700.00	.94 *(23.81)*

① 56,300 Series have NEMA 1 enclosure. For adapter dimensions, see *Technical Data*

Ordering and Identification Information

The following example and tables provide information for selecting the appropriate three-letter suffix when ordering a Stearns Brake.

Example of a complete part number:

1-056-034-00-BFF

- Series
- Torque
- Enclosure
- Lead wire position (internal and external, left and right) standard
- 230 Vac
- 5/8 bore and 3/16 x 3/32 keyway

Hub Selection

Character	Bore (in.)	Keyway** (in. x in.)
A* B C D	5/8 5/8 3/4 7/8	1/8 x 1/16 3/16 x 3/32 3/16 x 3/32 3/16 x 3/32
E F* K L*	1-1/8 1-1/4 1/2 1	1/4 x 1/8 1/4 x 1/8 1/8 x 1/16 1/4 x 1/8
N* O* P* R* S*	9/16 11/16 1-1/16 13/16 15/16	1/8 x 1/16 3/16 x 3/32 1/4 x 1/8 3/16 x 3/32 1/4 x 1/8

Minimum bore is .500. Maximum allowable bore is 1.25. For through-shaft applications, .875 is maximum

*These bores are non-standard. Add $225.00 to list price.

**Keyseats made to ANSI B17.1 Standard.

Standard AC Voltage Ratings

Character	Voltage	Hz
B	115	60
D	110	50
E	200	60
F	230 190	60 50
H	220	50
L	460 380	60 50
M	415	50
N	575	60
O	110/220	50
P	115/208-230	60
Q	208-230/460 190/380	60 50
R	200/400	60

Direct Current

Char-acter	Voltage
T U V W	12 24 36 48
X Y Z	95 115 230

Consult factory if other DC voltage is needed.

Modifications are available- see SAB Modification Section

Dimensional Drawings are on the pages following.

Series 56,000 (1-056-0XX-00) & Series 56,000-80 (1-056-0XX-80)

Mounting Face: NEMA 56C, 143TC and 145TC 4.5” AK, 5.88” AJ

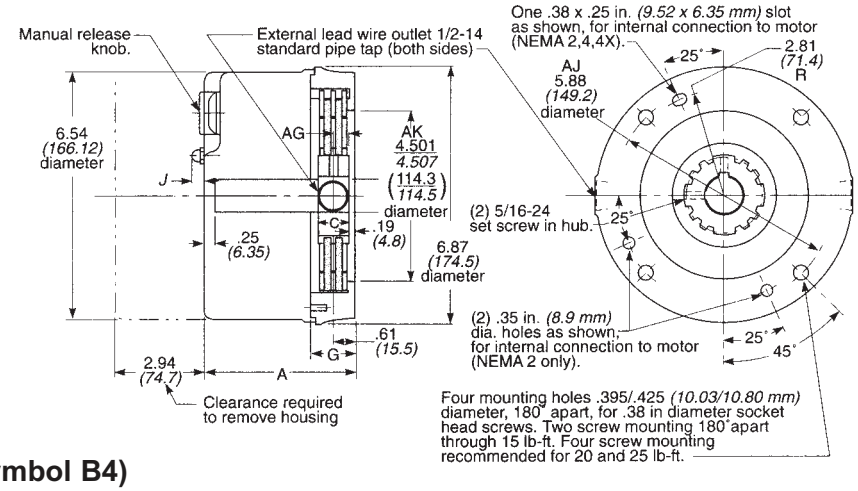

Dimensions for estimating only.
For installation purposes request certified prints.

Installation and Service: P/N 8-078-905-60

Parts List: P/N 8-078-906-00

Modifications: Pages 47-56

Series 56,000 Pricing (Discount Symbol B4)

Nominal Static Torque lb-ft (Nm)	Enclosure	Basic Model Number and List Price**			
		AC	AC List Price**	DC	DC List Price**
1.5 (2)	NEMA 2	1-056-001-00	$430.00	1-056-005-00	$730.00
	NEMA 4	1-056-002-00	565.00	1-056-006-00	865.00
	NEMA 4X	1-056-004-00	640.00	1-056-008-00	940.00
3 (4)	NEMA 2	1-056-011-00	450.00	1-056-015-00	750.00
	NEMA 4	1-056-012-00	585.00	1-056-016-00	885.00
	NEMA 4X	1-056-014-00	660.00	1-056-018-00	960.00
6 (8)	NEMA 2	1-056-021-00	515.00	1-056-025-00	815.00
	NEMA 4	1-056-022-00	650.00	1-056-026-00	950.00
	NEMA 4X	1-056-024-00	725.00	1-056-028-00	1,025.00
10 (14)	NEMA 2	1-056-031-00	615.00	1-056-035-00	915.00
	NEMA 4	1-056-032-00	755.00	1-056-036-00	1,055.00
	NEMA 4X	1-056-034-00	830.00	1-056-038-00	1,130.00
15 (20)	NEMA 2	1-056-041-00	715.00	1-056-045-00	1,015.00
	NEMA 4	1-056-042-00	855.00	1-056-046-00	1,155.00
	NEMA 4X	1-056-044-00	930.00	1-056-048-00	1,230.00
20 (27)	NEMA 2	1-056-051-00	805.00	1-056-055-00	1,105.00
	NEMA 4	1-056-052-00	940.00	1-056-056-00	1,240.00
	NEMA 4X	1-056-054-00	1,015.00	1-056-058-00	1,315.00
25 (34)	NEMA 2	1-056-061-00	900.00	1-056-065-00	1,200.00
	NEMA 4	1-056-062-00	1,035.00	1-056-066-00	1,335.00
	NEMA 4X	1-056-064-00	1,110.00	1-056-068-00	1,410.00

Trolley

Bridge

Series 56,000- 80* Pricing (Discount Symbol B4)

Nominal Static Torque lb-ft (Nm)	Enclosure	Basic Model Number and List Price**			
		AC	AC List Price**	DC	DC List Price**
1.5 (2)	NEMA 4	1-056-002-80*	$500.00	1-056-006-80*	$800.00
3 (4)	NEMA 4	1-056-012-80*	520.00	1-056-016-80*	820.00
6 (8)	NEMA 4	1-056-022-80*	585.00	1-056-026-80*	885.00
10 (14)	NEMA 4	1-056-032-80*	690.00	1-056-036-80*	990.00
15 (20)	NEMA 4	1-056-042-80*	790.00	1-056-046-80*	1,090.00
20 (27)	NEMA 4	1-056-052-80*	875.00	1-056-056-80*	1,175.00
25 (34)	NEMA 4	1-056-062-80*	970.00	1-056-066-80*	1,270.00

*** 56,000-80 Series includes a C-face gasket only, no hub seal.**

**** Subtract $30.00 for brake ordered less hub.**

NEMA 2 Dimensions

Nominal Static Torque lb-ft (Nm)	Dimensions in Inches (Dimensions in Millimeters)					Wt lbs (Kg)
	A	AG	C Hub Width	G	J	
1.5 (2)	4.06 (103.1)	.52 (13.2)	.81 (20.6)	1.23 (31.2)	.31 (7.9)	6 (2.7)
3 (4)						6 (2.7)
6 (8)						6 (2.7)
10 (14)						7 (3.2)
15 (20)						7 (3.2)
20 (27)	4.50 (114.3)	.52 (13.2)	1.18 (30.0)	1.66 (42.2)	.31 (7.9)	8 (3.6)
25 (34)						8 (3.6)

NEMA 4/ NEMA 4X Dimensions

Nominal Static Torque lb-ft (Nm)	Dimensions in Inches (Dimensions in Millimeters)					Wt lbs (Kg)
	A	AG	C Hub Width	G	J	
1.5 (2)	4.06 (103.1)	.47 (11.9)	.81 (20.6)	1.21 (30.7)	.37 (9.4)	7 (3.2)
3 (4)						7 (3.2)
6 (8)						7 (3.2)
10 (14)	4.51 (114.6)	.59 (15.0)	1.18 (30.0)	1.66 (42.2)	.37 (9.4)	8 (3.6)
15 (20)						8 (3.6)
20 (27)						8 (3.6)
25 (34)						8 (3.6)

ii. **Bearings**

Cylindrical Roller Thrust Crane Hook Series With and Without Grease Fitting...

- Special Design for Crane Hook Applications.
- Designed to Fit Standard Hook Shanks.
- Steel “Weathershed” to Keep Out Contaminants.
- Available With or Without Grease Fittings.
- Bearing Capacity is the Static Load Rating Based on a Permanent Deformation of .0002 inch per inch of Roller Diameter.

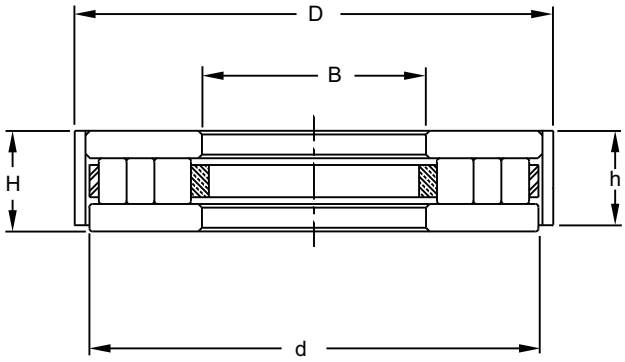

CT Type

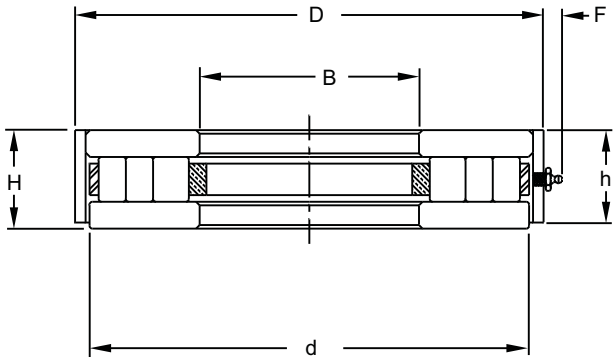

WCT Type

Hook Bearing

Basic Bearing Number		Designed Hook Shank	Bore	Outside Diameter D		Height H	Internal Dimensions		Bearing Capacity
Grease Fitting									
None	Installed		B	*CT*	*WCT* *		d	h	
CT-11	WCT-11	1 5/8	1.640	3.093	3.343	0.812	2.95	0.69	36,890
CT-16	WCT-16	1 15/16	1.952	3.468	3.593	0.812	3.22	0.69	65,310
CT-17	WCT-17	2	2.015	3.937	4.000	1.000	3.60	0.88	73,210
CT-19	WCT-19	2 1/4	2.265	4.000	4.250	1.000	3.86	0.88	72,970
CT-20-C	WCT-20-C	2 1/4	2.265	4.250	4.375	1.000	3.98	0.88	88,600
CT-23	WCT-23	2 3/4	2.765	4.750	4.843	1.000	4.45	0.88	93,820
CT-24-A	WCT-24-A	2 3/4	2.765	4.875	5.156	1.250	4.76	1.13	121,300
CT-27-A	WCT-27-A	3 1/4	3.265	6.125	6.250	1.500	5.85	1.38	180,810
CT-27-C	WCT-27-C	3 1/4	3.265	6.187	6.375	1.750	5.97	1.63	212,960
CT-27-B	WCT-27-B	3 1/2	3.515	6.156	6.375	1.625	5.97	1.50	203,410
CT-28-A	WCT-28-A	3 1/2	3.515	6.750	6.937	1.625	6.54	1.50	245,110
CT-34-A	WCT-34-A	3 3/4	3.765	7.125	7.250	1.875	6.86	1.75	288,080
CT-35-A	WCT-35-A	4 1/4	4.265	8.171	8.375	2.000	7.97	1.88	369,200
CT-38-A	WCT-38-A	4 1/2	4.515	8.125	8.312	2.000	7.91	1.88	390,910
CT-39-A	WCT-39-A	5	5.015	9.156	9.375	2.250	8.97	2.13	628,470
CT-44-A	WCT-44-A	5 1/2	5.515	10.500	10.500	2.500	10.10	2.38	628,470
CT-45-A	WCT-45-A	6	6.015	11.156	11.375	3.000	10.97	2.75	923,160
CT-49-A	WCT-49-A	6 13/16	6.827	12.750	12.750	2.500	12.34	2.38	1,004,880

* Dimension Fx2 must be added to bearing O.D. for determining overall O.D. on WCT type.
F = .41 inch (approx.) for all sizes.

QMPF13J207S

All Steel Housing

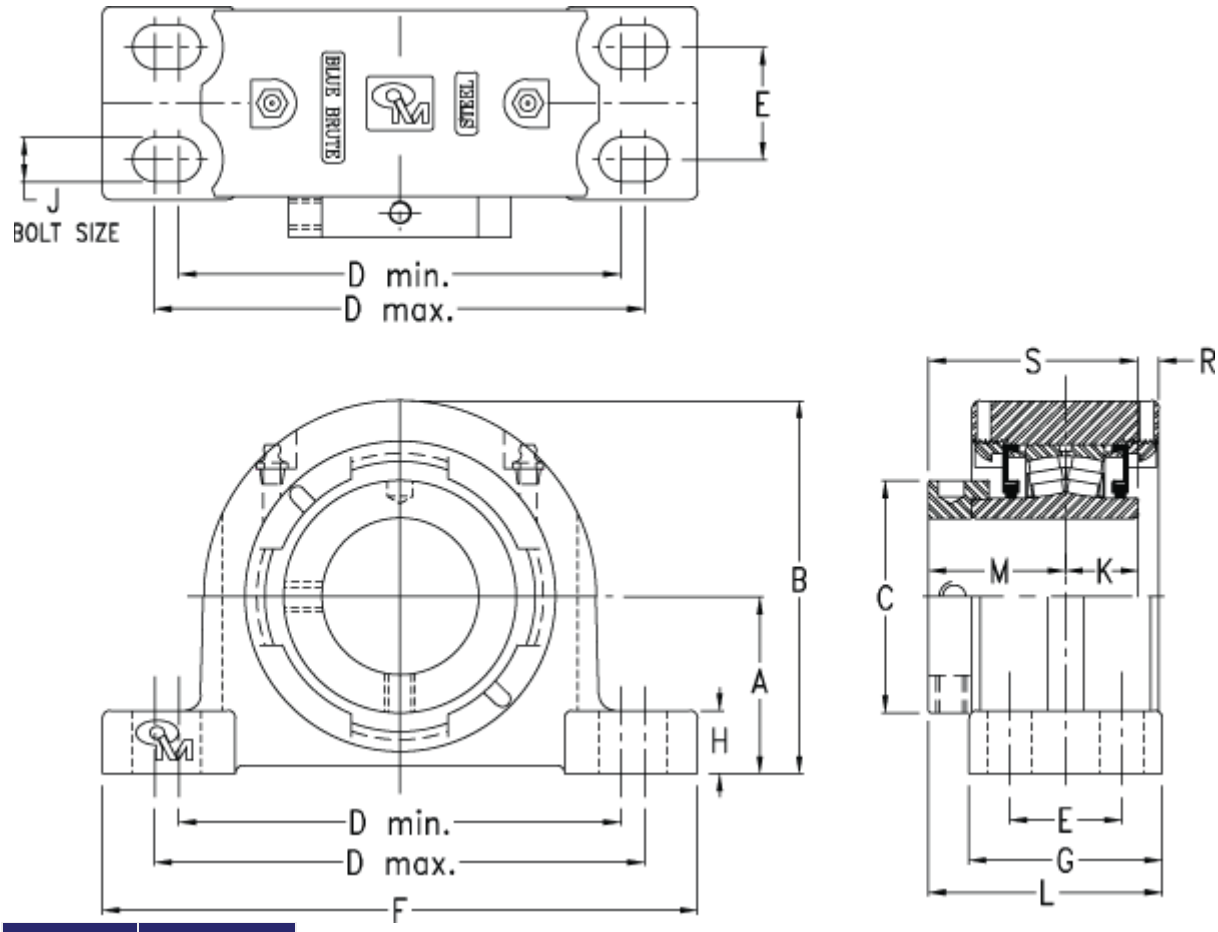

Shaft Size	Bearing Designation
2-7/16"	22213

QMPF13J207S Dimensions (in)

A	B	C	D_{Min}	D_{Max}	E	F	G	H	J	K	L	M	R	S	WT
2.750	5.800	3.62	6.880	7.630	1.750	9.250	3	0.98	5/8	1.24	3.63	2.13	0.210	3.37	20

QMPF13J207S Thrust and Radial Factors

Basic C Rating	Static C_0 Rating	e	Y1	Y2
39790	48560	0.25	2.69	4.00

QMPF13J207S Load Ratings

Life (Hours)	50 RPM	100 RPM	200 RPM	500 RPM	1000 RPM	1200 RPM	1500 RPM	1800 RPM	2100 RPM	2400 RPM	2700 RPM	3000 RPM	3200 RPM
5000	17658	14343	11650	8850	7189	6806	6365	6026	5754	5528	5336	5170	5071
10000	14343	11650	9463	7189	5839	5528	5170	4895	4674	4490	4334	4199	4119
20000	11650	9463	7686	5839	4743	4490	4199	3976	3796	3647	3521	3411	3346
50000	8850	7189	5839	4436	3603	3411	3190	3020	2884	2771	2674	2591	2542
100000	7189	5839	4743	3603	2926	2771	2591	2453	2342	2250	2172	2105	2064

*Note: Blue Brute Bearings are made of cast steel; therefore, Blue Brute Bearings pillow block units are designed to accept housing load up to 'Static C_0 Rating' at any angle from P0 to P180.

Oil Lubrication			Grease Lubrication		
M/N Seal	**T/ML Seal**	**B/C/O Seal**	**M/N Seal**	**T/ML Seal**	**B/C/O Seal**
1800	3200	1500	1800	2800	1500

QMPF13J207S Shaft Tolerance

Shaft Tolerance
+0.00 / -0.0015

QMPF13J207S Amount of Float per One Rotation of External housing Nut

Float
0.083

ISO 9001:2000

QMI REGISTERED

20398:800464

iii. **Couplings**

Barrel coupling
TCB type

Application

TCB barrel couplings are recommended for installation in crane lifting mechanisms, to connect the cable drum with the gearbox output shaft, as well as in winch conveyors and platform hoists.

When the gearbox output shaft is rigidly connected to the drum in a lifting mechanism, supported between points (Fig. 1), this originates a statically indeterminate case.

This type of mounting requires special care in alignment and levelling, which is difficult to achieve in practice.

Mounting inaccuracies, as well as deformation in structures and wear in moving parts, lead to enormous additional forces, above all in the gearbox output shaft, which as a result of alternative bending loads can lead to breakage due to fatigue and faults in bearings and gear wheels.

In the recommended mounting (Fig. 2) the barrel coupling, which is installed between the gearbox and cable drum, performs the function of an articulated joint, thus making the connection statically determinate and avoiding the occurrence of high bending moments.

Figure 4 shows the mounting of the barrel coupling in a lifting mechanism. Considering the fact that this coupling allows axial displacement, a self-adjusting bearing must be mounted, fixed laterally, at the opposite end of the drum shaft in order to withstand the axial forces that may be generated.

As a special application, the TCB barrel coupling can be designed as an articulated joint that withstands axial forces by itself (type TCBA, see page 15).

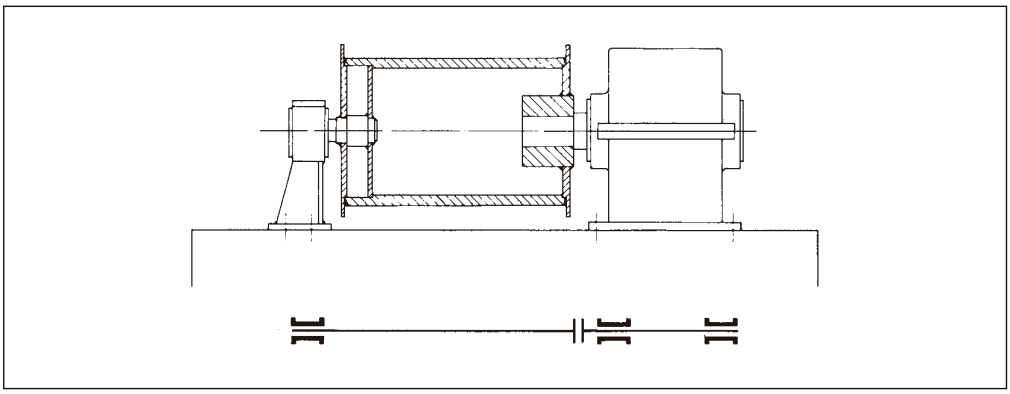

Fig. 1
Rigid mounting of gearbox-drum connection
Support at three points.

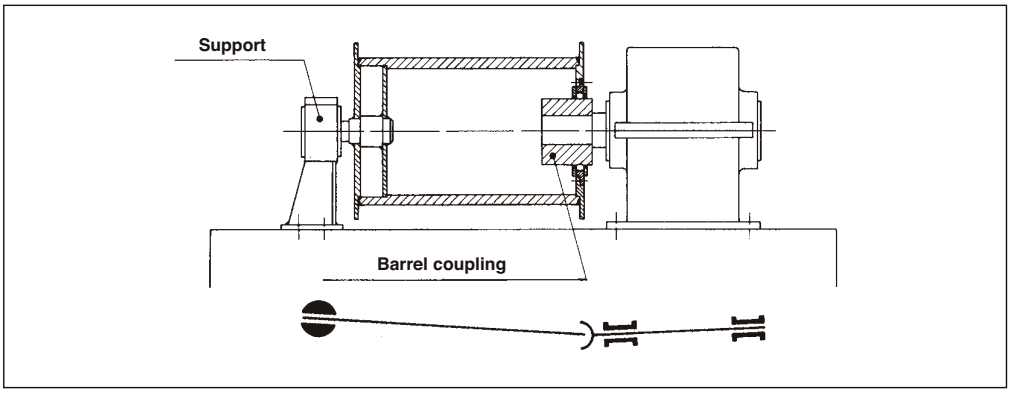

Fig. 2
Mounting with barrel coupling.

Part List

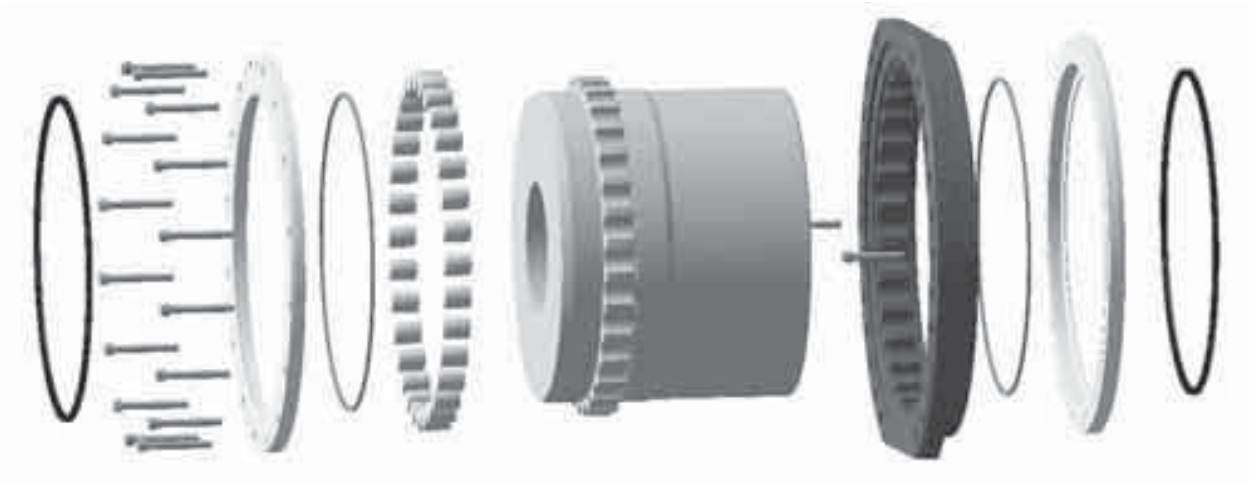

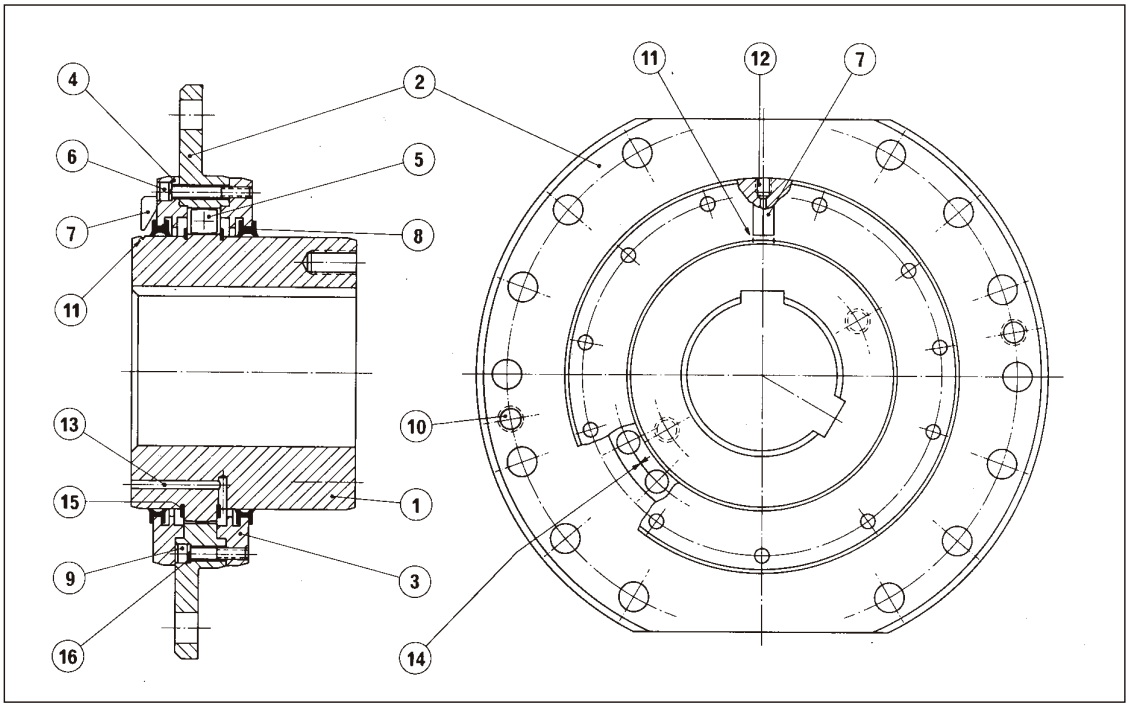

Fig. 3

1. Hub
2. Sleeve
3. Inner cover
4. Outer cover
5. Barrel
6. Allen screw
7. Wear and axial adjustment indicator
8. Special seal
9. Allen screw
10. Threaded holes for disassembly
11. Wear limit grooves
12. Grease connection
13. Grease overflow
14. Assembly reference
15. Barrel guide rings
16. Grower washer

Description and characteristics

The barrel coupling consists of a sleeve provided with semicircular toothing around its internal diameter and a hub that is externally toothed in a similar way. A series of cylindrical barrels, of hardened steel, are inserted in the holes formed by this toothing to act as power transmission elements.

Covers with their corresponding special seals serve to assure the perfect tightness of the inner zone, preventing the penetration of dust and guaranteeing the continuity of the necessary lubrication. Two double-lamina elastic rings mounted on the hub, one on each side of the toothing, limit the axial displacement of the barrels.

The convex shape of the barrels and the internal spaces of the toothing allows the oscillation of the hub relative to the sleeve, compensating angular misalignments of ± 1° 30' and an axial displacement that varies between ± 3 mm and ± 8 mm (see Table 4, page 8).

Torque is transmitted to the drum's receiving flange, generally by two diametrically opposed flat driving surfaces, located at the periphery of the coupling flange, and also by means of a series of bolts which, at the same time, serve as connection with the drum.

Other connection systems, such as adjusted spring pins or similar, can also be used following the adequate preparation of the flanges (see TCB with special flange on page 15).

The described design is appropriate for bearing large radial loads, as these are distributed over large barrel support surfaces. In the same way, this design also minimises the effect of alternative bending of the torque on the toothing, the latter being robust thanks to its low height and large bottom section. In addition to this, due to the effect of a "crush polishing" of the hardened barrel on the tooth profile, its wear resistance is appreciably improved.

An indicator located on the outer cover (Pos. 7, Fig. 3), which moves relative to the marks provided on the hub as a function of wear, permits control of internal wear of the toothing without the need to disassemble any part of the coupling. The same indicator also serves to control the axial position of the sleeve relative to the hub.

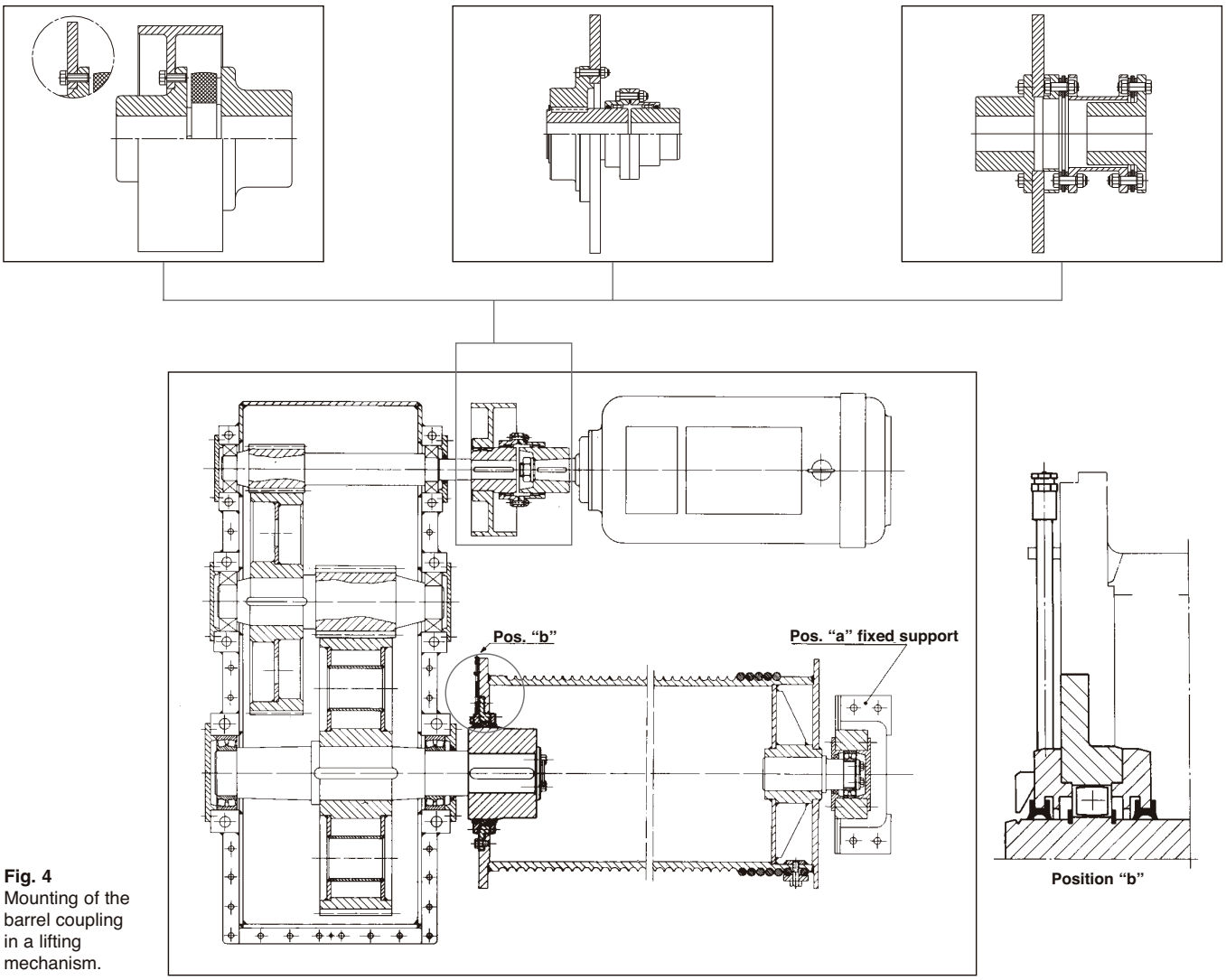

Fig. 4
Mounting of the barrel coupling in a lifting mechanism.

Diameters and parameters

Standard TCB

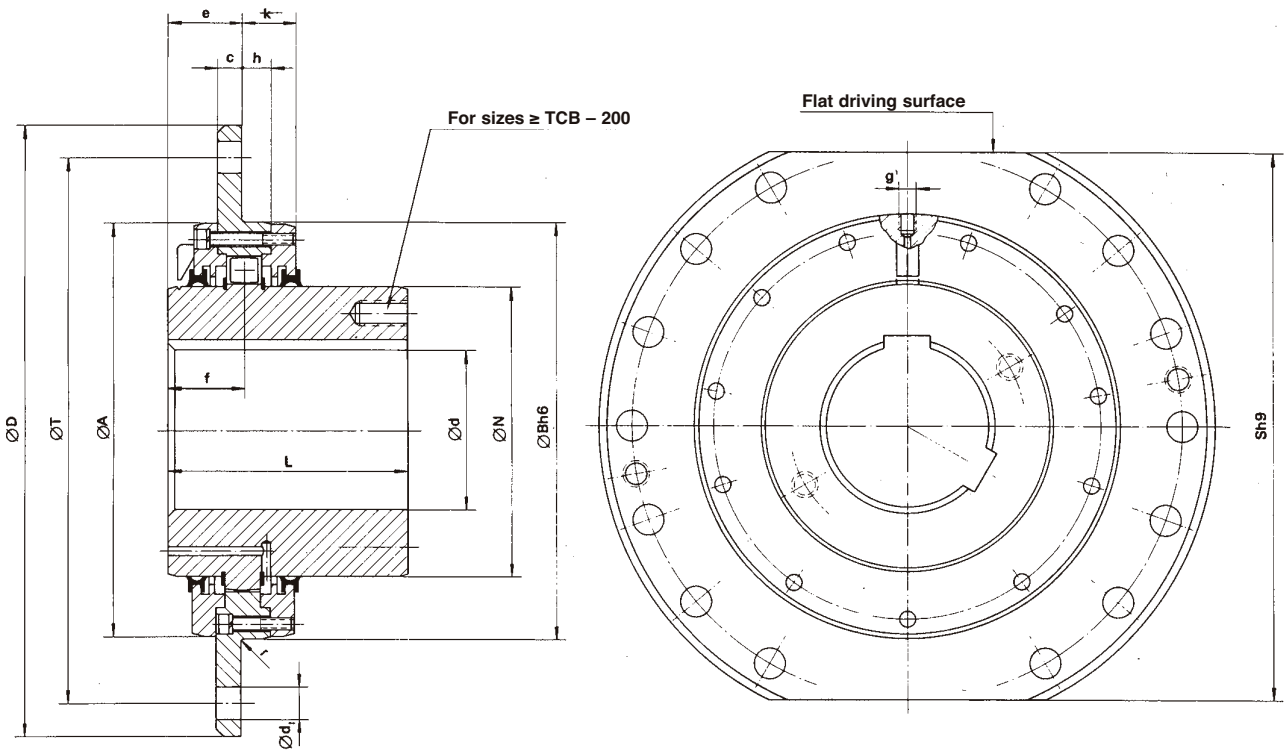

Fig. 9

Table 4. Technical data and general dimensions of the standard TCB

TCB SIZE	TN (Nm) (1)	Fr (N)	d max. (2)	d min.	D	L	L min.	N	A	B	S	e	f	c	r	h	k	T	d_1	Max. axial ±	Wt. (Kg)	J (Kg/m²)
25	4.500	14.500	65	38	250	95	85	95	159	160	220	42	44	12	2,5	16	31	220	15	3	12	0,06
50	6.000	16.500	75	48	280	100	85	110	179	180	250	42	44	12	2,5	16	31	250	15	3	19	0,13
75	7.500	18.500	85	58	320	110	95	125	199	200	280	45	46	15	2,5	17	32	280	19	4	23	0,17
100	9.000	20.000	95	58	340	125	95	140	219	220	300	45	46	15	2,5	17	32	300	19	4	27	0,25
130	15.500	31.000	110	78	360	130	95	160	239	240	320	45	47	15	2,5	19	34	320	19	4	33	0,36
160	19.500	35.000	125	78	380	145	95	180	259	250	340	45	47	15	2,5	19	34	340	19	4	42	0,48
200	24.000	38.500	135	98	400	170	95	200	279	280	360	45	47	15	2,5	19	34	360	19	4	54	0,66
300	28.000	42.000	150	98	420	175	95	220	309	310	380	45	47	15	2,5	19	34	380	19	4	70	0,93
400	38.000	49.000	185	98	450	185	120	260	339	340	400	60	61	20	2,5	22	40	400	24	4	95	1,45
500	61.400	92.000	215	98	510	220	125	300	399	400	460	60	61	20	2,5	22	40	460	24	6	146	2,86
600	70.000	115.000	235	118	550	240	125	312	419	420	500	60	61	20	2,5	22	40	500	24	6	162	3,93
1.000	120.000	125.000	250	138	580	260	130	351	449	450	530	60	61	20	2,5	22	40	530	24	6	195	5,63
1.500	180.000	150.000	295	158	650	315	140	415	529	530	580	65	66	25	2,5	27	45	600	24	6	305	11
2.100	250.000	221.000	305	168	665	330	145	428	542	545	590	65	68	25	2,5	31	49	615	24	6	320	12,2
2.600	310.000	250.000	315	168	680	350	145	443	558	560	600	65	69,5	25	4	34	52	630	24	6	360	16
3.400	400.000	300.000	340	198	710	380	165	475	599	600	640	81	85,5	35	4	34	58	660	28	8	408	20
4.200	500.000	340.000	385	228	780	410	165	539	669	670	700	81	85,5	35	4	34	58	730	28	8	580	34
6.200	685.000	380.000	430	258	850	450	165	603	729	730	760	81	85,5	35	4	34	58	800	28	8	715	52

1) During start-up, couplings can admit 200% of nominal torque capacity.

2) Maximum bore diameters for execution with keyways according to DIN 6885/1. For other types of connections consult our Technical Department.

Maximum angular displacement of axes: ± 1° 30'

g = lubrication point

Up to size 160: R. 1/8" Gas, after size 200: R. 1/4" Gas.

ADVANTAGES:

IMPROVED SOFT SEAL offers superior sealing under misaligned conditions.

UNIQUE TOOTH FORM using a 40° pressure angle, distributes the load over a larger area than couplings which use a 20° pressure angle.

FULL TOOTH ENGAGEMENT reduces uneven wear on teeth that results in longer life plus improved performance.

QUALITY EXPOSED FASTENERS consists of SAE Grade 5 bolts with hex nuts and lock washers. Installation is simple, without special tools. Shrouded bolts optional.

CLEAR RUST INHIBITIVE AND CORROSION RESISTANT FINISH protects coupling in normal industrial environments.

AVAILABLE OFF-THE-SHELF in reborables with large bore capabilities or stock finish bored.

OPTIONAL PILOT RINGS provides positive register between identical halves. Eliminates selective assembly required in male, female sleeves.

INTERCHANGEABLE by half coupling with competitive coupling designs.

HIGHER MISALIGNMENT CAPABILITY sizes 1-7 compensate for up to ±1 1/2° static angular misalignment per gear mesh.

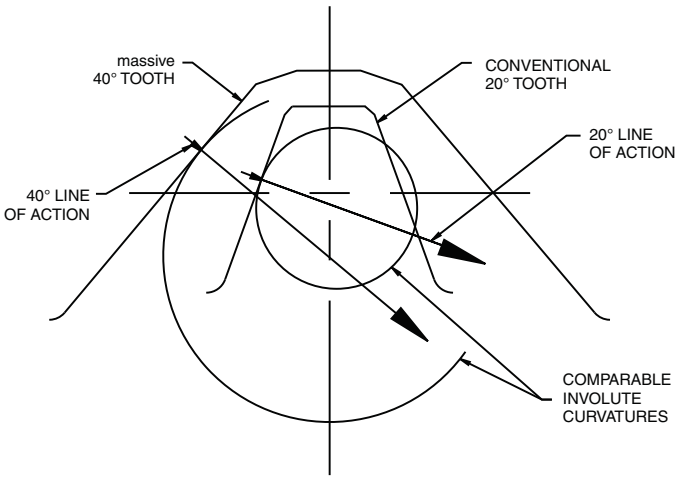

20° vs. 40° Tooth Comparison on the same pitch diameter

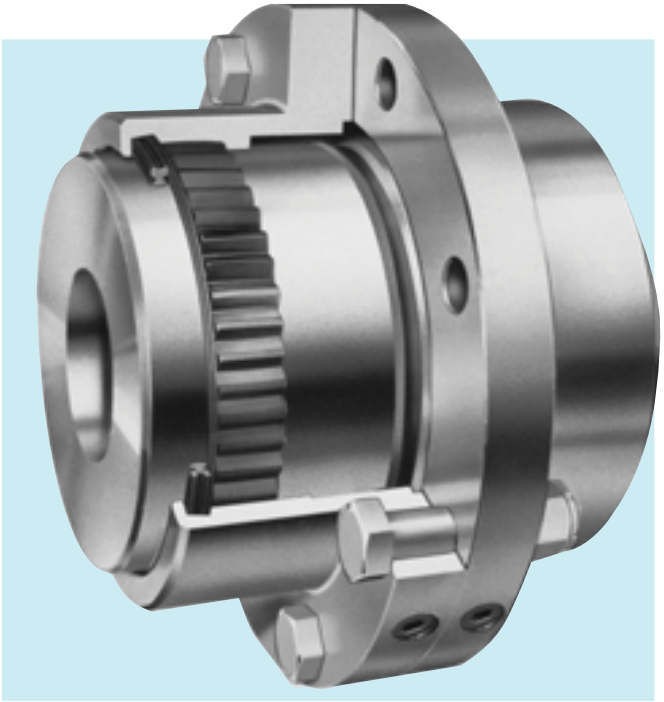

Size 1-7

Advantages of the 40° Pressure Angle Tooth

- **STRONGER TOOTH**
  The line of action of the force exerted at the pitch line of the new Performance Profile crosses the root circle near the center of the tooth rather than outside the tooth, as in the case of conventional gear teeth. The result is an appreciable reduction in root stress which helps protect against tooth failure.

- **GREATER TOOTH CONTACT AREA**
  The profile of the tooth is significantly flatter due to the large involute radius of curvature. This causes the load to be distributed over a larger area. As a result, compressive stresses, lubricant film pressure and tooth wear are minimized.

- **GREATER SLEEVE CENTERING ABILITY**
  The 40° pressure angle tooth produces greater radial forces which helps to maintain sleeve concentricity with respect to the axis of rotation. As a result, inherent unbalance and centrifugal forces are minimized and a smooth and efficient operation is imparted to the coupling.

- **INCREASED ARC OF CONTACT**
  With the 40° pressure angle tooth there is less tendency for some of the teeth to lose contact during misalignment. This prevents a drastic reduction in torque rating with increased misalignment.

- **INCREASED STRENGTH AND DURABILITY**
  Under maximum loading and misaligned conditions, the stronger tooth, the greater intimacy between the teeth and the increased arc of contact all combine to produce a coupling unit that is additionally rugged and efficiently useful for longer periods of time.

FULL ENGAGEMENT TEETH

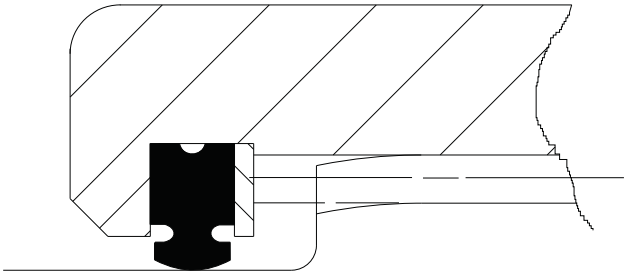

The gear coupling has been designed with full length tooth engagement with the inherent result of longer life and improved performance.

HIGH MISALIGNMENT SEAL

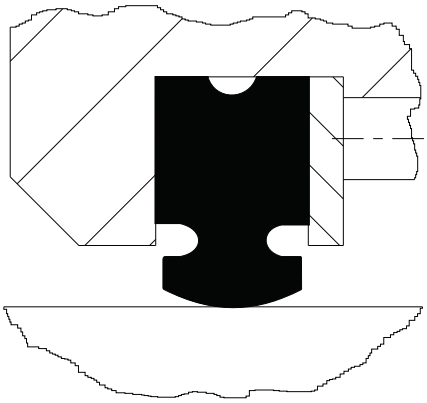

Competitive gear couplings incorporate an O-ring seal. In order to conform with today's high misalignment capacities, this O-ring must fit into a groove that is larger than the ring. couplings use a truly high misalignment seal that seals remarkably under misaligned conditions.

Optional Pilot Rings

The standard coupling consists of two identical half couplings. Optional precision steel pilot rings are available when more accurate centering of the two sleeves is required.

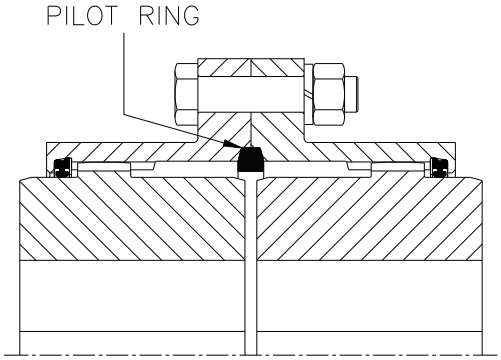

Basic Coupling Size	Pilot Ring Part No.	Wt. (lb.)
1	1W PR	.06
1 1/2	1 1/2W PR	.09
2	2W PR	.12
2 1/2	2 1/2W PR	.21
3	3W PR	.25
3 1/2	3 1/2W PR	.25
4	4W PR	.98
4 1/2	4 1/2W PR	1.1
5	5W PR	1.2
5 1/2	5 1/2W PR	1.5
6	6W PR	1.9
7	7W PR	2.9

POWERLIGN

This flangeless design transmits identical torques as the standard Coupling. Having a smaller outside diameter, however, it is more compact, lighter, and can run at greater speeds.

This alternative may be selected for applications where space is limited.

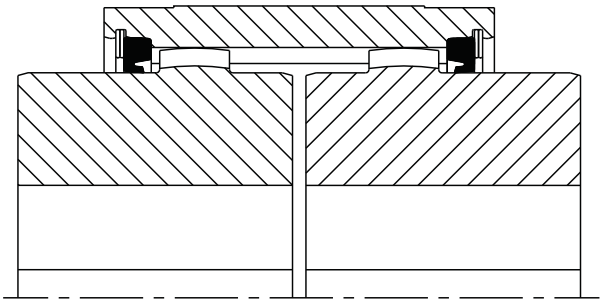

Service Factors

Values listed are intended only as a general guide, and are typical of usual service requirements. For systems which frequently utilize the peak torque capability of the power source, verify that the magnitude of this peak torque does not exceed the 1.0 Service Factor Rating of the coupling selected. Applications which involve extreme repetitive shock or high-energy load absorption characteristics should be referred — with full particulars — to

Values contained in the table are to be applied to smooth power sources such as electric motors and steam turbines. For drives involving internal combustion engines of four or five cylinders, add 1.0 to the values listed; for six or more cylinders, add 0.5 to the values listed. For systems utilizing AC or DC Mill Motors as the prime mover, refer to Note (1).

⚠CAUTION All peoplemoving applications must be referred to engineering.

Application	Typical Service Factor
AGITATORS	
Pure Liquids	1.0
Liquids & Solids	1.25
Liquids — Variable Density	1.25
BLOWERS	
Centrifugal	1.0
Lobe	1.5
Vane	1.25
BRIQUETTE MACHINES	2.0
CAR PULLERS — Intermittent Duty	1.5
COMPRESSORS	
Centrifugal	1.0
Centriaxial	1.25
Lobe	1.5
Reciprocating — Multi-Cylinder	2.0
CONVEYORS — LIGHT DUTY UNIFORMLY FED	
Apron, Bucket, Chain, Flight, Screw	1.25
Assembly, Belt	1.0
Oven	1.5
CONVEYORS — HEAVY DUTY NOT UNIFORMLY FED	
Apron, Bucket, Chain, Flight, Oven	1.5
Assembly, Belt	1.25
Reciprocating, Shaker	2.5
CRANES AND HOISTS (NOTE 1 and 2)	
Main hoists, Reversing	2.5
Skip Hoists, Trolley & Bridge Drives	2.0
Slope	2.0
CRUSHERS	
Ore, Stone	3.0
DREDGES	
Cable Reels	1.75
Conveyors	1.5
Cutter Head Jig Drives	2.5
Maneuvering Winches	1.75
Pumps	1.75
Screen Drives	1.75
Stackers	1.75
Utility Winches	1.5
ELEVATORS (NOTE 2)	
Bucket	1.75
Centrifugal & Gravity Discharge	1.5
Escalators	1.5
Freight	2.5
FANS	
Centrifugal	1.0
Cooling Towers	1.5
Forced Draft	1.5
Induced Draft without Damper Control	2.0
FEEDERS	
Apron, Belt, Disc, Screw	1.25
Reciprocating	2.5

Application	Typical Service Factor
GENERATORS — (Not Welding)	1.0
HAMMER MILLS	2.0
LAUNDRY WASHERS — Reversing	2.0
LAUNDRY TUMBLERS	2.0
LINE SHAFT	1.5
LUMBER INDUSTRY	
Barkers — Drum Type	2.0
Edger Feed	2.0
Live Rolls	2.0
Log Haul — Incline	2.0
Log Haul — Well type	2.0
Off Bearing Rolls	2.0
Planer Feed Chains	1.75
Planer Floor Chains	1.75
Planer Tilting Hoist	1.75
Slab Conveyor	1.5
Sorting Table	1.5
Trimmer Feed	1.75
MARINE PROPULSION	
Main Drives	2.0
MACHINE TOOLS	
Bending Roll	2.0
Plate Planer	1.5
Punch Press — Gear Driven	2.0
Tapping Machines	2.5
Other Machine Tools	
Main Drives	1.5
Auxiliary Drives	1.25
METAL MILLS	
Draw Bench — Carriage	2.0
Draw Bench — Main Drive	2.0
Forming Machines	2.0
Slitters	1.5
Table Conveyors	
Non-Reversing	2.25
Reversing	2.5
Wire Drawing & Flattening Machine	2.0
Wire Winding Machine	1.75
METAL ROLLING MILLS (NOTE 1)	
Blooming Mills	*
Coilers, hot mill	2.0
Coilers, cold mill	1.25
Cold Mills	2.0
Cooling Beds	1.75
Door Openers	2.0
Draw Benches	2.0
Edger Drives	1.75
Feed Rolls, Reversing Mills	3.5
Furnace Pushers	2.5
Hot Mills	3.0
Ingot Cars	2.5
Kick-outs	2.5
Manipulators	3.0
Merchant Mills	3.0
Piercers	3.0
Pusher Rams	2.5
Reel Drives	1.75
Reel Drums	2.0
Reelers	3.0
Rod and Bar Mills	1.5
Roughing Mill Delivery Table	3.0
Runout Tables	
Reversing	3.0
Non-Reversing	2.0
Saws, hot & cold	2.5
Screwdown Drives	3.0
Skelp Mills	3.0
Slitters	3.0
Slabbing Mills	3.0
Soaking Pit Cover Drives	3.0
Straighteners	2.5
Tables, transfer & runout	2.0
Thrust Block	3.0
Traction Drive	3.0
Tube Conveyor Rolls	2.5
Unscramblers	2.5
Wire Drawing	1.5
MILLS, ROTARY TYPE	
Ball	2.25
Dryers & Coolers	2.0
Hammer	1.75
Kilns	2.0

Application	Typical Service Factor
Pebble & Rod	2.0
Pug	1.75
Tumbling Barrels	2.0
MIXERS	
Concrete Mixers	1.75
Drum Type	1.5
OIL INDUSTRY	
Chillers	1.25
Paraffin Filter Press	1.75
PAPER MILLS	
Barker Auxiliaries, Hydraulic	2.0
Barker, Mechanical	2.0
Barking Drum Spur Gear Only	2.25
Beater & Pulper	1.75
Bleacher	1.0
Calenders	2.0
Chippers	2.5
Coaters	1.0
Converting Machines, except Cutters, Platers	1.5
Couch Roll	1.75
Cutters, Platers	2.0
Cylinders	1.75
Disc Refiners	1.75
Dryers	1.75
Felt Stretcher	1.25
Felt Whipper	2.0
Jordans	1.75
Line Shaft	1.5
Log Haul	2.0
Pulp Grinder	1.75
Press Roll	2.0
Reel	1.5
Stock Chests	1.5
Suction Roll	1.75
Washers & Thickeners	1.5
Winders	1.5
PRINTING PRESSES	1.5
PULLERS — Barge Haul	2.0
PUMPS	
Centrifugal	1.0
Boiler Feed	1.5
Reciprocating	
Single Acting	
1 or 2 Cylinders	2.25
3 or more Cylinders	1.75
Double Acting	2.0
Rotary, Gear, Lobe, Vane	1.5
RUBBER INDUSTRY	
Mixer — Banbury	2.5
Rubber Calendar	2.0
Rubber Mill (2 or more)	2.25
Sheeter	2.0
Tire Building Machines	2.5
Tire & Tube Press Openers	1.0
Tubers & Strainers	2.0
SCREENS	
Air Washing	1.0
Grizzly	2.0
Rotary — Stone or Gravel	1.5
Traveling Water Intake	1.25
Vibrating	2.5
SEWAGE DISPOSAL EQUIPMENT	
Bar Screens	1.25
Chemical Feeders	1.25
Collectors, Circuline or Straightline	1.25
Dewatering Screens	1.25
Grit Collectors	1.25
Scum Breakers	1.25
Slow or Rapid Mixers	1.25
Sludge Collectors	1.25
Thickeners	1.25
Vacuum Filters	1.25
STEERING GEAR	1.0
STOKERS	1.0
WINCH	1.5
WINDLASS	1.75

* Refer to KOP-FLEX

NOTES
(1) Maximum Torque at the coupling must not exceed Rated Torque of the coupling.
(2) Check local and industrial safety codes.

Selection Procedure

1. **Select Coupling Based on Bore Capacity.**
   Select the coupling size that has a maximum bore capacity equal to or larger than the larger of the two shafts. For interference fits larger than AGMA standards, consult KOP-FLEX.
2. **Verify Coupling Size Based on Load Rating.**
   a. Select the appropriate Service Factor from the Table on page 194.
   b. Calculate required HP / 100 RPM:
   $$\frac{\text{HP x Service Factor x 100}}{\text{RPM}} = \text{HP / 100 RPM}$$
   c. Verify that the selected coupling has a rating greater than or equal to the required HP / 100 RPM.
3. **Check Balance Requirements.**
   Consult the Dynamic Balancing Guide on page 163 to help determine if balancing is required. Verify that the maximum operating speed does not exceed the maximum speed rating of the coupling. The maximum speed rating does not consider lateral critical speed considerations for floating shaft applications. WALDRON® couplings are available component balanced only.

Note: Care must be exercised on proper selection of any shaft coupling. The Users must assure themselves that the design of the shaft to coupling hub connection is adequate for the duty intended.

Fastener Data

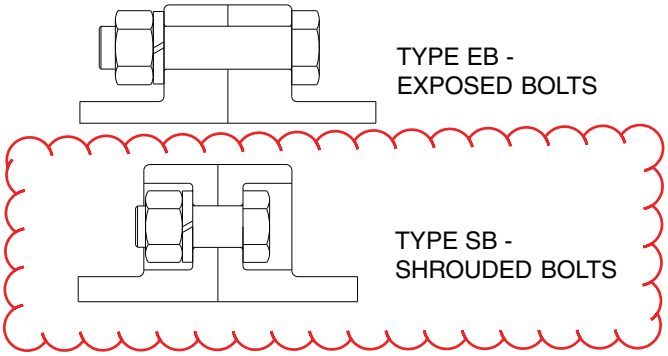

Coupling Size	Type EB Exposed Bolt			Type SB Shrouded Bolt		
	Qty.	Size & Length	Bolt Circle	Qty.	Size & Length	Bolt Circle
1	6	1/4 x 1 1/2	3 3/4	6	1/4 x 7/8	3 3/4
1 1/2	8	3/8 x 2	4 13/16	8	3/8 x 1	4 13/16
2	6	1/2 x 2 1/2	5 7/8	10	3/8 x 1	5 13/16
2 1/2	6	5/8 x 2 3/4	7 1/8	10	1/2 x 1 5/16	7
3	8	5/8 x 2 3/4	8 1/8	12	1/2 x 1 5/16	8
3 1/2	8	3/4 x 3 3/8	9 1/2	12	5/8 x 1 5/8	9 9/32
4	8	3/4 x 3 3/8	11	14	5/8 x 1 5/8	10 5/8
4 1/2	10	3/4 x 3 3/8	12	14	5/8 x 1 5/8	11 3/4
5	8	7/8 x 4 1/4	13 1/2	14	3/4 x 2 1/8	13 3/16
5 1/2*	14	7/8 x 3 1/4	14 1/2	-	-	-
6*	14	7/8 x 3 1/4	15 3/4	-	-	-
7*	16	1 x 3 5/8	18 1/4	-	-	-

Sizes #5 1/2 and larger are available in exposed bolts only.

HOW TO ORDER

PART NUMBER EXPLANATION
Complete Rough Bore Coupling

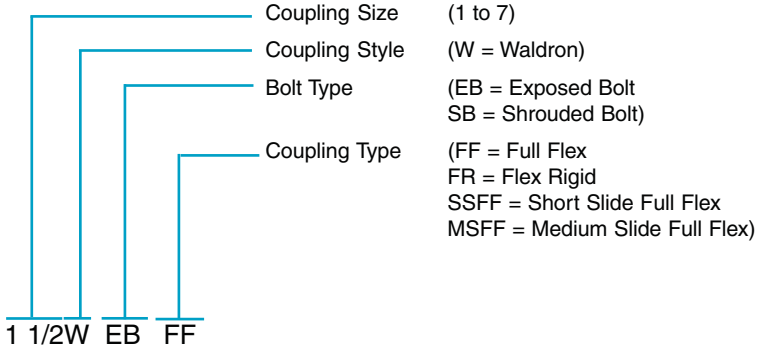

Coupling Parts

Description

*FHUB = Flex Hub
*VHUB = Vertical Hub
*RHUB = Rigid Hub
SLEEVE = Standard Sleeve
FS = Fastener Set (w/gasket)
LEFD = LEF Disk
SPRxxx = Spacer for x.xx shaft separation
SP = Stop Plate for Slide Couplings
VP = Vertical Plate

* For finish bored hubs, add FB and bore size. All finish bores and keyways per AGMA 9002-A86 with interference fits. Clearance bores are available on request with one setscrew over keyway.

1 1/2W FHUB FB

Hoist coupling

Full Flex Coupling Size 1-7

A conventional 4-bearing system has two bearings on the driving shaft and two bearings on the driven shaft. Both angular and offset shaft misalignment will be present to some degree and a full flex coupling is mandatory. The full flex coupling is the standard coupling having two gear ring sets, one set per half coupling. For selection procedure see page 195.

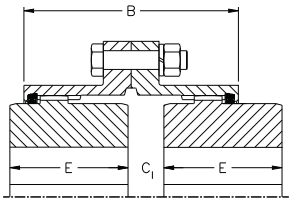

ONE HUB REVERSED

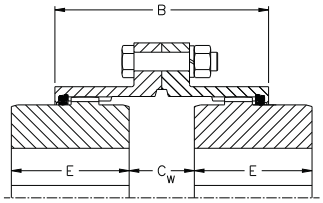

TWO HUBS REVERSED

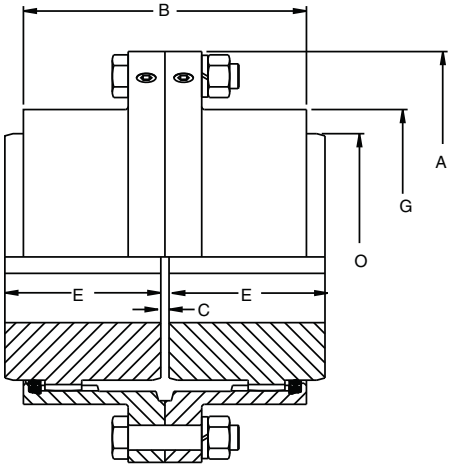

Coupling Size	Maximum Bore with Standard Key	Rating HP / 100 RPM	Torque Rating (lb.-in.)	Peak Torque Rating (lb.-in.)	Maximum Speed (RPM)	Dimensions							
						A	B	C	C_i	C_w	E	G	O
1	1 5/8	10	6300	12600	10000	4 9/16	3 3/16	1/8	3/8	5/8	1 11/16	3	2 5/16
1 1/2	2 3/16	24	15100	30200	7400	6	3 7/8	1/8	9/16	1	2 1/16	3 13/16	3 1/8
2	2 3/4	50	31500	63000	5900	7	4 5/8	1/8	13/16	1 1/2	2 7/16	4 13/16	4
2 1/2	3 1/4	90	56700	113400	5000	8 3/8	5 11/16	3/16	29/32	1 5/8	3 1/32	5 23/32	4 23/32
3	4	150	94500	189000	4300	9 7/16	6 9/16	3/16	1 1/32	1 7/8	3 19/32	6 23/32	5 5/8
3 1/2	4 3/4	230	145000	290000	3900	11	7 5/8	1/4	1 5/16	2 3/8	4 3/16	7 3/4	6 5/8
4	5 3/8	350	221000	442000	3500	12 1/2	8 5/8	1/4	1 7/16	2 5/8	4 3/4	8 31/32	7 1/2
4 1/2	6	480	300000	600000	3200	13 5/8	9 5/8	5/16	1 5/8	2 15/16	5 3/8	10 1/8	8 1/2
5	6 3/4	650	410000	820000	2900	15 5/16	10 13/16	5/16	1 11/16	3 1/16	6 1/8	11 3/8	9 1/2
5 1/2*	7 1/2	850	536000	1072000	2700	16 3/4	11 5/8	5/16	1 7/8	3 7/16	6 5/8	12 9/16	10 27/64
6*	8 1/4	1100	693000	1386000	2500	18	13 1/4	5/16	2 5/16	4 5/16	7 3/8	13 7/8	11 3/4
7*	9 1/4	1600	1010000	2020000	2200	20 3/4	14 3/4	3/8	2 3/16	4	8 11/16	15 3/4	13 1/4

* Sizes 5 1/2, 6 and 7 are only available with exposed bolt sleeves. Type EB exposed bolt sleeves are standard.

Coupling Type EB (Exposed Bolts) Part Numbers

Coupling Size	Full Flex Coupling			Fastener Set (Includes Gasket)		Sleeve		Flex Hub		
	No Bore Part No.	Wt.	Finish Bore① Part No.	Part No.	Wt.	Part No.	Wt.	No Bore Part No.	Wt.	Finish Bore① Part No.
1	1W EB FF	10	1W EB FF FB	1 EB FS	1	1W EB SLEEVE	2	1W FHUB	3	1W FHUB FB
1 1/2	1 1/2W EB FF	19	1 1/2W EB FF FB	1 1/2 EB FS	1	1 1/2W EB SLEEVE	6	1 1/2W FHUB	3	1 1/2W FHUB FB
2	2W EB FF	30	2W EB FF FB	2 EB FS	1	2W EB SLEEVE	8	2W FHUB	7	2W FHUB FB
2 1/2	2 1/2W EB FF	52	2 1/2W EB FF FB	2 1/2 EB FS	2	2 1/2W EB SLEEVE	14	2 1/2W FHUB	12	2 1/2W FHUB FB
3	3W EB FF	76	3W EB FF FB	3 EB FS	3	3W EB SLEEVE	17	3W FHUB	20	3W FHUB FB
3 1/2	3 1/2W EB FF	117	3 1/2W EB FF FB	3 1/2 EB FS	5	3 1/2W EB SLEEVE	28	3 1/2W FHUB	28	3 1/2W FHUB FB
4	4W EB FF	180	4W EB FF FB	4 EB FS	5	4W EB SLEEVE	41	4W FHUB	47	4W FHUB FB
4 1/2	4 1/2W EB FF	244	4 1/2W EB FF FB	4 1/2 EB FS	7	4 1/2W EB SLEEVE	53	4 1/2W FHUB	66	4 1/2W FHUB FB
5	5W EB FF	361	5W EB FF FB	5 EB FS	9	5W EB SLEEVE	80	5W FHUB	96	5W FHUB FB
5 1/2	5 1/2W EB FF	422	5 1/2W EB FF FB	5 1/2 EB FS	14	5 1/2W EB SLEEVE	89	5 1/2W FHUB	115	5 1/2W FHUB FB
6	6W EB FF	494	6W EB FF FB	6 EB FS	14	6W EB SLEEVE	100	6W FHUB	140	6W FHUB FB
7	7W EB FF	822	7W EB FF FB	7 EB FS	22	7W EB SLEEVE	160	7W FHUB	240	7W FHUB FB

① All finish bores and keyways per AGMA 9002-A86 commercial standard tolerances with interference fit bores. Clearance fit bores are available on request and include one setscrew over keyway.

Coupling Type SB (Shrouded Bolts) Part Numbers

Coupling Size	Full Flex Coupling			Fastener Set (Includes Gasket)		Sleeve		Flex Hub		
	No Bore Part No.	Wt.	Finish Bore① Part No.	Part No.	Wt.	Part No.	Wt.	No Bore Part No.	Wt.	Finish Bore① Part No.
1	1W SB FF	10	1W SB FF FB	1 SB FS	1	1W SB SLEEVE	2	1W FHUB	3	1W FHUB FB
1 1/2	1 1/2W SB FF	19	1 1/2W SB FF FB	1 1/2 SB FS	1	1 1/2W SB SLEEVE	6	1 1/2W FHUB	3	1 1/2W FHUB FB
2	2W SB FF	30	2W SB FF FB	2 SB FS	1	2W SB SLEEVE	8	2W FHUB	7	2W FHUB FB
2 1/2	2 1/2W SB FF	52	2 1/2W SB FF FB	2 1/2 SB FS	2	2 1/2W SB SLEEVE	13	2 1/2W FHUB	12	2 1/2W FHUB FB
3	3W SB FF	76	3W SB FF FB	3 SB FS	2	3W SB SLEEVE	15	3W FHUB	20	3W FHUB FB
3 1/2	3 1/2W SB FF	117	3 1/2W SB FF FB	3 1/2 SB FS	4	3 1/2W SB SLEEVE	26	3 1/2W FHUB	28	3 1/2W FHUB FB
4	4W SB FF	180	4W SB FF FB	4 SB FS	4	4W SB SLEEVE	37	4W FHUB	47	4W FHUB FB
4 1/2	4 1/2W SB FF	244	4 1/2W SB FF FB	4 1/2 SB FS	4	4 1/2W SB SLEEVE	50	4 1/2W FHUB	66	4 1/2W FHUB FB
5	5W SB FF	361	5W SB FF FB	5 SB FS	7	5W SB SLEEVE	72	5W FHUB	96	5W FHUB FB

① All finish bores and keyways per AGMA 9002-A86 commercial standard tolerances with interference fit bores. Clearance fit bores are available on request and include one setscrew over keyway.

Flex Rigid and Floating Shaft Couplings Size 1- 7

When driving and driven shafts are widely separated, an unsupported or floating shaft is used to span the gap. The two couplings required at each end of that shaft consist of one half of a standard coupling bolted to a Rigid Hub, each unit called a Flex-Rigid Coupling. Usually, the rigid hubs are mounted on the driving and driven shafts so that the flex halves on the floating shaft may be replaced without disturbing the connected equipment.

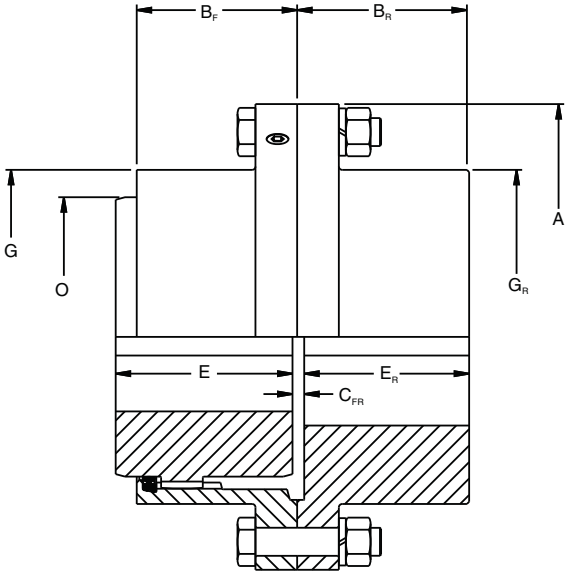

Coupling Type EB (Exposed Bolts) Part Numbers

Coupling Size	Flex Rigid Coupling			Rigid Hub②		
	No Bore Part No.	Wt.	Finish Bore① Part No.	No Bore Part No.	Wt.	Finish Bore① Part No.
1	1W EB FR	10	1W EB FR FB	1 EB RHUB	5	1 EB RHUB FB
1 1/2	1 1/2W EB FR	19	1 1/2W EB FR FB	1 1/2 EB RHUB	9	1 1/2 EB RHUB FB
2	2W EB FR	31	2W EB FR FB	2 EB RHUB	15	2 EB RHUB FB
2 1/2	2 1/2W EB FR	55	2 1/2W EB FR FB	2 1/2 EB RHUB	27	2 1/2 EB RHUB FB
3	3W EB FR	83	3W EB FR FB	3 EB RHUB	40	3 EB RHUB FB
3 1/2	3 1/2W EB FR	126	3 1/2W EB FR FB	3 1/2 EB RHUB	65	3 1/2 EB RHUB FB
4	4W EB FR	184	4W EB FR FB	4 EB RHUB	90	4 EB RHUB FB
4 1/2	4 1/2W EB FR	252	4 1/2W EB FR FB	4 1/2 EB RHUB	124	4 1/2 EB RHUB FB
5	5W EB FR	371	5W EB FR FB	5 EB RHUB	119	5 EB RHUB FB
5 1/2	5 1/2W EB FR	418	5 1/2W EB FR FB	5 1/2 EB RHUB	200	5 1/2 EB RHUB FB
6	6W EB FR	504	6W EB FR FB	6 EB RHUB	250	6 EB RHUB FB
7	7W EB FR	792	7W EB FR FB	7 EB RHUB	370	7 EB RHUB FB

Coupling Type SB (Shrouded Bolts) Part Numbers

Coupling Size	Flex Rigid Coupling			Rigid Hub②		
	No Bore Part No.	Wt.	Finish Bore① Part No.	No Bore Part No.	Wt.	Finish Bore① Part No.
1	1W SB FR	10	1W SB FR FB	1 SB RHUB	5	1 SB RHUB FB
1 1/2	1 1/2W SB FR	19	1 1/2W SB FR FB	1 1/2 SB RHUB	9	1 1/2 SB RHUB FB
2	2W SB FR	31	2W SB FR FB	2 SB RHUB	15	2 SB RHUB FB
2 1/2	2 1/2W SB FR	55	2 1/2W SB FR FB	2 1/2 SB RHUB	27	2 1/2 SB RHUB FB
3	3W SB FR	83	3W SB FR FB	3 SB RHUB	40	3 SB RHUB FB
3 1/2	3 1/2W SB FR	126	3 1/2W SB FR FB	3 1/2 SB RHUB	65	3 1/2 SB RHUB FB
4	4W SB FR	184	4W SB FR FB	4 SB RHUB	90	4 SB RHUB FB
4 1/2	4 1/2W SB FR	252	4 1/2W SB FR FB	4 1/2 SB RHUB	124	4 1/2 SB RHUB FB
5	5W SB FR	371	5W SB FR FB	5 SB RHUB	119	5 SB RHUB FB

① All finish bores and keyways per AGMA 9002-A86 commercial standard tolerances.
② Rigid hubs are furnished less fasteners.

Flex-Rigid Coupling Data

Coupling Size	Maximum Bore with Standard Keyway		Rating HP / 100 RPM	Torque Rating (lb.-in.)	Peak Torque Rating (lb.-in.)	Maximum Speed (RPM) ②	Dimensions						
	Flex	Rigid					A	B_F	B_R	C_{FR} ①	E	E_R	G_R
1	1 5/8	2 1/4	10	6300	12600	10000	4 9/16	1 19/32	1 21/32	5/32	1 11/16	1 9/16	3
1 1/2	2 3/16	2 11/16	24	15100	30200	7400	6	1 15/16	1 15/16	5/32	2 1/16	1 27/32	3 13/16
2	2 3/4	3 3/8	50	31500	63000	5900	7	4 5/8	2 3/8	5/32	2 7/16	2 9/32	4 13/16
2 1/2	3 1/4	4	90	56700	113400	5000	8 3/8	5 11/16	3	3/16	3 1/32	2 29/32	5 3/4
3	4	4 3/4	150	94500	189000	4300	9 7/16	6 9/16	3 9/16	3/16	3 19/32	3 15/32	6 3/4
3 1/2	4 3/4	5 1/2	230	145000	290000	3900	11	7 5/8	4 1/8	7/32	4 3/16	4 1/32	7 3/4
4	5 3/8	6 3/8	350	221000	442000	3500	12 1/2	8 5/8	4 5/8	5/16	4 3/4	4 7/16	9
4 1/2	6	7 1/4	480	300000	600000	3200	13 5/8	9 5/8	5 1/4	11/32	5 3/8	5 1/16	10 1/8
5	6 3/4	8 1/2	650	410000	820000	2900	15 5/16	10 13/16	5 7/8	11/32	6 1/8	5 11/16	11 3/8
5 1/2*	7 1/2	8	850	536000	1072000	2700	16 3/4	11 5/8	7 5/32	11/32	6 5/8	6 31/32	10 3/4
6*	8 1/4	8 3/4	1100	693000	1386000	2500	18	13 1/4	7 21/32	11/32	7 3/8	7 15/32	11 1/2
7*	9 1/4	10	1600	1010000	2020000	2200	20 3/4	14 3/4	9	7/16	8 11/16	8 3/4	13 3/8

* Sizes 5 1/2, 6 and 7 are only available with exposed bolts. Type EB exposed bolts are standard.
① Floating shaft length is equal to the shaft separation minus 2 times the C_{FR} dimension.
② Max. speed is based on flange stress limits and does not consider lateral critical speed considerations for floating shaft applications.

FLOATING SHAFT ASSEMBLY

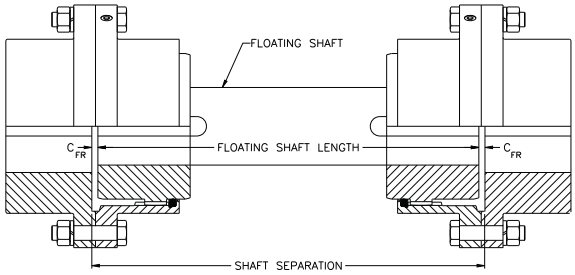

Ordering Instructions: **When ordering floating shaft couplings, be sure to include hp and rpm, shaft separation, and equipment shaft sizes. Applications with very large shaft separations and/or high speeds may require tubular floating shafts due to lateral critical speed concerns.**

Important: Care must be exercised in proper selection of any shaft coupling. The Users must assure themselves that the design of the shaft to coupling hub connection is adequate for the duty intended.

iv. **Gearbox**

Speed Reducers: designed for dependability

Advanced Features

Hoist Gearbox

All-steel housings and components, generous plate thicknesses for rigid alignment.

Clean, smart-looking exterior with high-stability base design.

Top and bottom lifting lugs for handling ease.

Splash-and-trough lubrication — simple, effective, reliable.

Spring-loaded dual-lip seals on all shaft extensions.

Convenient dipstick oil-level indicator.

Husky shafts for minimum deflection under heavy loads.

Antifriction tapered roller bearings on all shafts.

Thru-hardened, high-strength alloy steel helical gearing with high face contact.

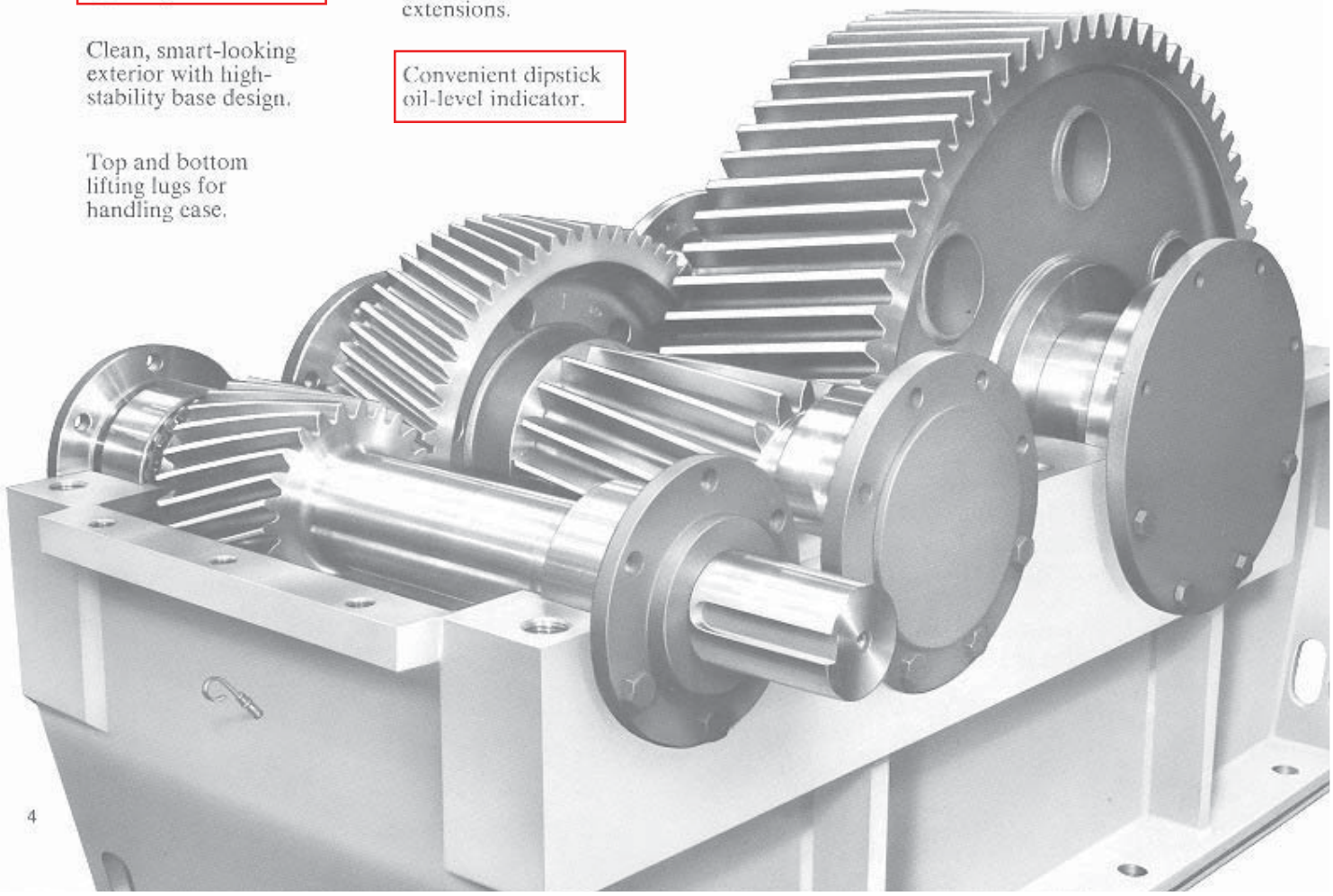

DIMENSIONS - TRIPLE REDUCTION HELICAL SPEED REDUCER

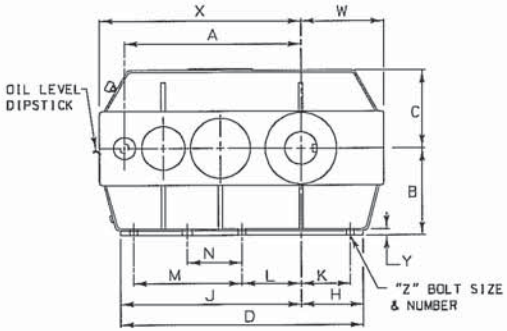

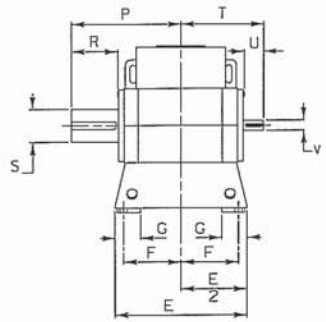

ALL KEYSEATS WILL HAVE THE FOLLOWING FILLET RADII

KEYSEAT WIDTH	r
3/8 TO 1/2	1/32
9/16 TO 1	1/16
1 1/16 TO 2	3/32
2 1/16 & UP	1/8

PLAN VIEW OF ASSEMBLIES

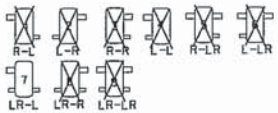

ALL DIMENSIONS IN INCHES
"B" DIMENSION TOLERANCE - PLUS .000 MINUS .030
ALL SHAFT TOLERANCE - 1 1/2 DIA. & LESS - PLUS .0000 MINUS .0005
OVER 1 1/2 DIA. - PLUS .000 MINUS .001

AGMA ASSEMBLY DESIGNATIONS ARE SHOWN BELOW NUMBERED ASSEMBLIES - EITHER ASSEMBLY NUMBER OR AGMA DESIGNATION MUST BE SPECIFIED WHEN ORDERING.

SIZE	A	B	C	D	E	F	G	H	J	K	L	M	N	P
80T	17 1/2	9 1/2	8	24 3/4	16	6 7/8	3 1/4	6 1/2	18 1/4	5	5 7/8	10 7/8	~	12 3/4

R	S	S-KEYSEAT	T	U	V	V-KEYSEAT	W	X	Y	Z	NET WEIGHT
5	3 1/4	3/4 X 3/8 X 4 7/8	10	2 1/4	1	1/4 X 1/8 X 2 1/8	9	20 3/4	1	3/4-6	830

CERTIFIED DRAWING

P. O. NO. 216417800

HOIST DRIVE
2 - TRIPLE REDUCTION HELICAL SPEED REDUCER
SIZE: CUSTOM 80-T
RATIO: 115.98:1 ASSEMBLY NO: 7
MESH RATINGS PER AGMA STANDARD 6010.E88
AGMA CALCULATED RATING: 13.30 HP @ 1800 RPM
NAMEPLATE SERVICE RATING: 7.50 HP @ 1800 RPM SERVICE FACTOR: 1.77
MOTOR: 7.50 HP @ 1800 RPM
WELDED STEEL HOUSING; ANTIFRICTION BEARINGS; SPLASH LUBRICATION
OIL LEVEL: 2.69" BELOW HOUSING SPLIT
OIL CAPACITY: 7.0 GAL RECOMMENDED LUBRICANT: AGMA# 5/1000 SSU @ 100'F
CERTIFIED DIMENSIONS PER DRAWING: B-16477
SERIAL NO: P-6884
3/17/92

CAD/CAM

NO.

TOLERANCES FOR MACHINED SURFACES-
UNLESS OTHERWISE SPECIFIED
2 PLACE DECIMAL DIMENSIONS ± .010
3 PLACE DECIMAL DIMENSIONS ± .003
ANGULAR DIMENSIONS ± 1°
BASE HOLE CENTERS ± .020
TOLERANCES FOR UNMACHINED SURFACES-
UNLESS OTHERWISE SPECIFIED ± .062

B.O.M. NO.6054

FINISH SYMBOLS
16 POLISH
32 GRIND
63 FINE MACH
125 SEMI-FINE
250 MEDIUM
500 ROUGH

DATE PLOTTED SC

TRI

3-

Gearmotors

Again we add to our motor (and brakemotor) technology, this time with reducers to offer the gearmotor.

Numerous reducer configurations are available.

Right angle single worm. It's available with flange or foot mounts, each with solid (single or double) or hollowshaft. Torque arm mounts are available with the hollowshaft.

Ratings: ¼–30hp
Ratio: 5.1–60:1
Output torque: up to 10,000 in. lbs.

Combination helical/right angle worm. It's available with flange or foot mounts, each with solid (single or double) or hollowshaft. Torque arm mounts are available with the hollowshaft.

Ratings: ⅓–10hp
Ratio: 7.2:1–372:1
Output torque: up to 18,000 in. lbs.

Helical bevel. It's available with flange or foot mounts, each offered with solid (single or double) or hollowshaft.

Ratings: ⅜–150hp
Ratio: 10:1–160:1
Output torque: up to 350,000 in. lbs.

Helical parallel and concentric shaft. These gearmotors are available with single, double and triple reduction gears, and foot or flange mount, and single solid shaft.

Ratings: ½–150hp
Ratio: 1.5:1–1800:1
Output torque: up to 130,000 in. lbs.

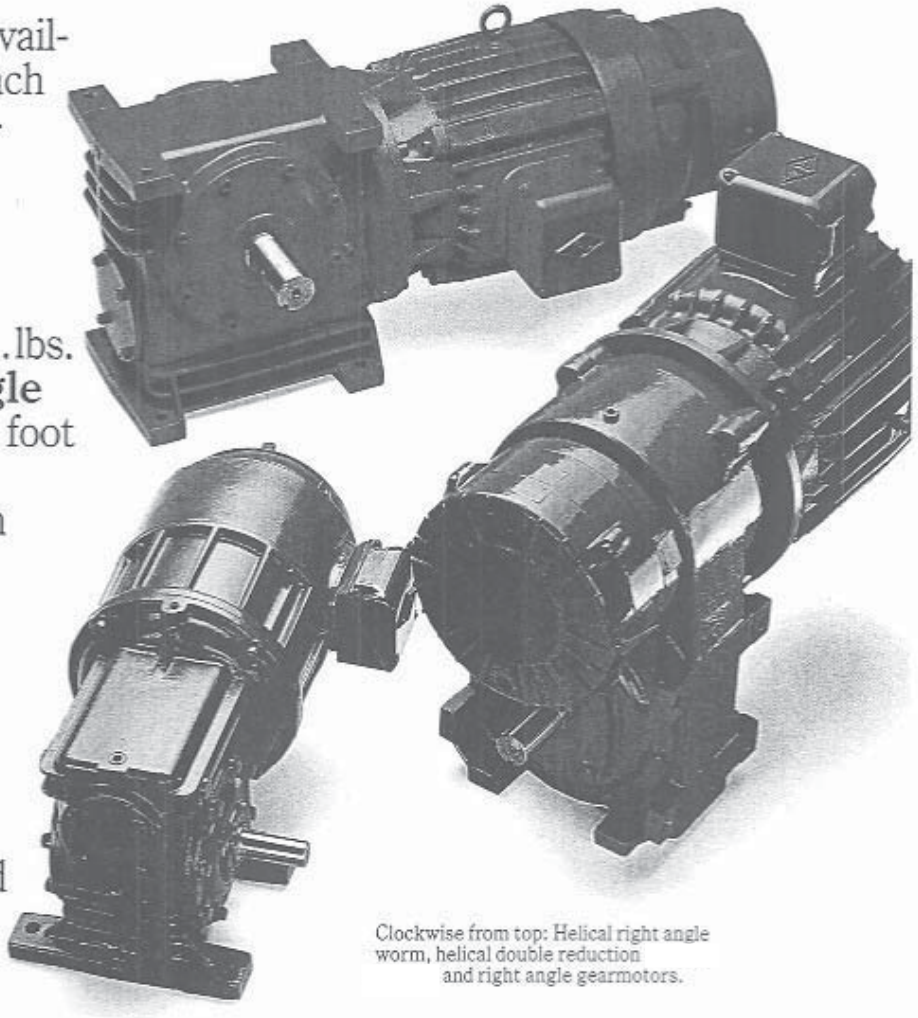

Clockwise from top: Helical right angle worm, helical double reduction and right angle gearmotors.

Helical parallel shaft
It's available in solid (single and double) hollowshaft with torque arm mount. Three integral sets of mounting feet allow versatility in mounting, without adaptions.

Ratings: ½–10hp
Ratio: 4:1–190:1
Output torque: up to 9,075 in. lbs.

Attachment 001 Rev 1

Item	*Qty.*	*Description*
1H	1	7.5 HP, 1800 RPM, 256U Frame, 480V/3Ph/60Hz, TENV, continuous duty, Flux Vector motor with 1024 encoder, single output shaft Assy A101-F1. The motor minimum insulation shall be Class H with a class B temperature rise, motor thermal protection required, less brake (Reference 92-3474A, note changes above)
2 T	1	.25 HP, 1800 RPM, 213 Frame, 480V/3Ph/60Hz, TENV, continuous duty, VFD motor, the motor minimum insulation shall be Class H with a class B temperature rise, motor thermal protection required, double shaft "QB" reducer ratio 125.40:1 with 480V/3Ph/60Hz 3 ft/lb brake adjustable down to 2.5 ft/lb or less, mounted on 5:1 first reduction with manual release (Reference 92-3474B, note changes above)
3B	1	.25 HP, 1800 RPM, 213 Frame, 480V/3Ph/60Hz, TENV, continuous duty, VFD motor, the motor minimum insulation shall be Class H with a class B temperature rise, motor thermal protection required, double shaft "QB" reducer ratio 157.17:1 with 480V/3Ph/60Hz 3 ft/lb brake adjustable down to 2.5 ft/lb or less, mounted on 5:1 first reduction with manual release (Reference 91-1364G, note changes above)

Required Design Info:

a. Standard motor speed torque curves
b. Motor nameplate data (including all information called for in NFPA 70, Section 430.7) Nameplates shall not be mounted, they will be shipped loose, do not add any holes to the drives for the nameplates.
c. Certified drawings
d. Gear reducer ratings
e. Certification materials meet the requirements of the specifications
f. Certification of Conformance

Built to NAVY specifications.

1

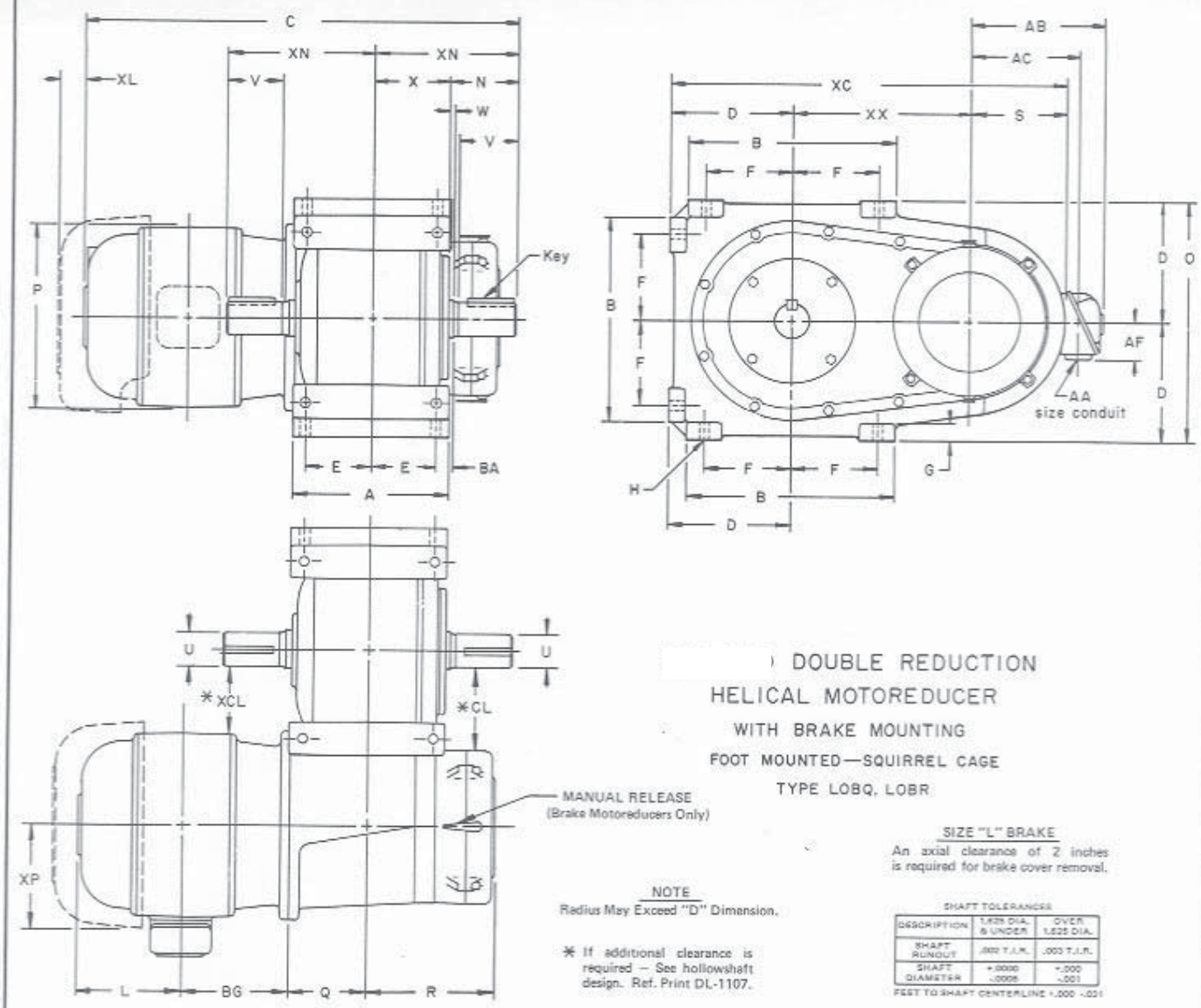

DOUBLE REDUCTION
HELICAL MOTOREDUCER
WITH BRAKE MOUNTING
FOOT MOUNTED—SQUIRREL CAGE
TYPE LOBQ, LOBR

NOTE
Radius May Exceed "D" Dimension.

* If additional clearance is required — See hollowshaft design. Ref. Print DL-1107.

SIZE "L" BRAKE
An axial clearance of 2 inches is required for brake cover removal.

SHAFT TOLERANCES

DESCRIPTION	1.625 DIA. & UNDER	OVER 1.625 DIA.
SHAFT RUNOUT	.002 T.I.R.	.003 T.I.R.
SHAFT DIAMETER	+.0000 -.0005	+.000 -.001

FEET TO SHAFT CENTERLINE +.000 -.031

Frame	L	P	AA	AB	AC	AF	BG	XL	△XP
182	4.88	9.00	.75	7.06	5.75	1.94	5.00	1.69	5.00
184	5.38	9.00	.75	7.06	5.75	1.94	5.50	1.69	5.00
213	6.12	10.25	.75	7.94	6.56	1.94	6.25	1.19	5.88
215	6.88	10.25	.75	7.94	6.56	1.94	7.00	1.19	5.88
254	8.12	10.25	.75	7.88	6.50	1.94	8.25	1.19	5.88
254U	8.12	12.25	1.00	9.81	7.94	2.75	7.94	1.38	6.88
256U	9.00	12.25	1.00	9.81	7.94	2.75	8.81	1.38	6.88
284U	9.31	13.88	1.25	10.75	8.88	2.75	9.12	1.38	7.88
286U	10.06	13.88	1.25	10.75	8.88	2.75	9.88	1.38	7.88

Gear Size "Q"		
C	●CL	●XCL
18.88	2.31	2.31
19.88	2.31	2.31
21.38	2.31	1.69
22.88	2.31	1.69
25.38	2.31	1.69
-	-	-
-	-	-
-	-	-
-	-	-

Gear Size "R"		
C	●CL	●XCL
22.56	4.75	4.75
23.56	4.75	4.75
25.06	4.75	4.12
26.56	4.75	4.12
29.06	4.75	4.12
28.75	4.75	3.12
30.50	4.75	3.12
31.12	4.75	2.31
32.62	4.75	2.31

Gear Size	TYPE	A	B	D	E	F	G	H	N	XN	O	Q	R	S	U	Sq.Key	V	W	X	BA	XC	XX
"Q"	LOBQ	7.12	7.50	5.25	3.00	3.00	.75	9/16	2.50	6.00	10.50	3.00	7.00	5.50	1.3750	5/16	2.19	.06	3.50	.56	18.25	7.500
"R"	LOBR	9.00	12.00	7.00	3.75	5.00	1.00	9/16	3.75	8.25	14.00	4.44	7.69	5.50	2.000	1/2	3.25	.25	4.50	.94	22.75	10.250

(1) duo centric rotor STYLE

	DRIP PROOF	TENV	TEFC
	AVO	AEO	AFO
(1)	DVO	DEO	DFO

♦ Revised
● Added
Revision D
4/30/71
DL-1101

PARALLEL SHAFT HELICAL GEAR REDUCER
SIZE "QB" –
TRIPLE REDUCTION
(Double Reduction Size "Q" with Size "B" Single Reduction Helical Input)

APPROX. FULL LOAD INPUT RPM	F.L. OUTPUT RPM			TOTAL GEAR RATIO	FIRST REDUCTION SIZE "B" GEAR	SECOND REDUCTION	THIRD REDUCTION	OUTPUT TORQUE – POUNDS INCHES AND RATED SERVICE FACTOR				
						SIZE "Q" GEAR		HORSEPOWER RATING				
	DESIGN "B" MOTOR	DESIGN "D" MOTOR	FLUID SHAFT WOUND ROTOR					.5	.75	1	1.5	2
DESIGN B 1740 DESIGN D 1700	46	45	44	37.41	2.7	2.05	6.76	657-3	986-3	1315-3	1972-2	2630-1
	37	36	35	46.18	2.7	2.53	6.76	817-3	1226-3	1635-2	2452-1	
	31	30	29	55.48	2.7	3.04	6.76	975-3	1463-2	1951-1		
	26	25	24	67.72	2.7	3.71	6.76	1163-3	1745-2	2327-1		
	21	20	19	85.51	5	2.53	6.76	1440-2	2160-1			
	17	16	16	102.75	5	3.04	6.76	1779-2	2669-1			
	14	14	13	125.40	5	3.71	6.76	2160-1				
	11	11	10	157.17	5	4.65	6.76	2750-1				

NET WEIGHT: 130 lbs. (approx.)

LOAD CAPACITY:

2400 lbs. - Overhung load capacity at middle of standard shaft extension.
2000 lbs. - Thrust load capacity on output shaft.
The allowable loads are based on Class I Service and an average bearing life of 25,000 hours.
The total radial load on **both output shaft extensions** and/or the total radial and thrust load should not exceed 1800 lbs.

*Ratings marked -1 are for Maximum Class I Service = Service Factor 1.0
Ratings marked -2 are for Maximum Class II Service = Service Factor 1.4
Ratings marked -3 are for Maximum Class III Service = Service Factor 2.0

*Size "QB" Gear available in the following frame sizes: 224, 225, 254, 213, 215, and 23.

*See Engineering Data Pages 1300, 1301, and 1302 for application classification data.

v. **Packaged Hoist**

SERIES 800

800 Series wire rope hoists are ideally suited for virtually any lifting application of up to five tons. Their modular design and versatility provide a wide range of capacities, lifts, hoisting speeds, and control options, making it possible to select the most efficient hoist for the job without wasted capacity or overkill.

The compact design and closer end approaches of the standard 800 Series hoist allows an unusually high hook lift, as compared to many so-called low headroom hoists, without resorting to design compromises. 800 Series hoists maximize hook coverage within an existing facility, reducing or eliminating the need for costly rebuilding or remodeling.

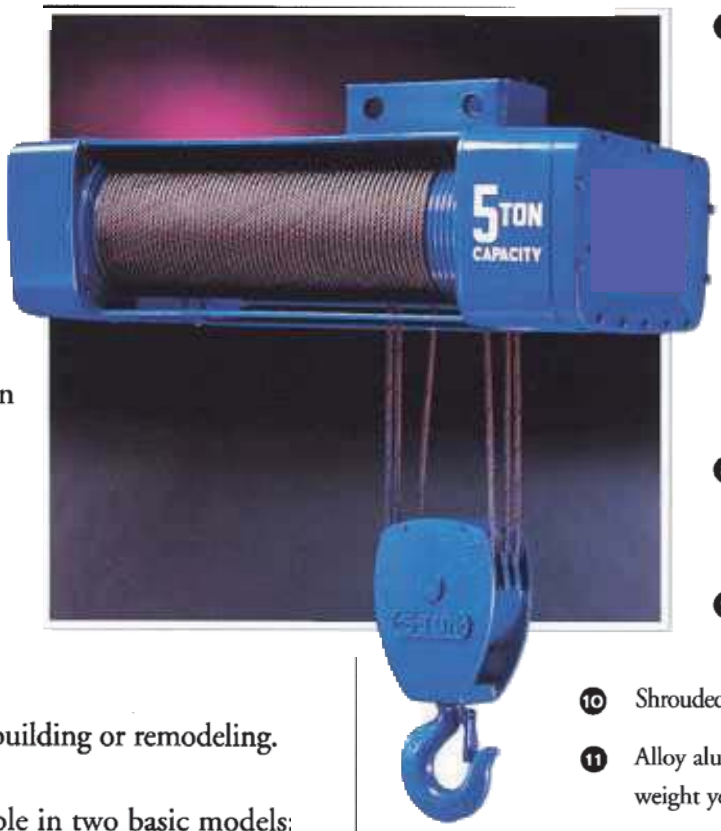

800 Series hoists are available in two basic models: single reeved and true vertical lift, with either air or electric power. The heavy-duty wire rope and drum-type hoist line has a steel mounting lug integral with the one-piece welded frame, and is designed for stationary mounting from an overhead structure, or with any of our monorail trolley options. Standard features of this rugged hoist line include a heavy welded steel frame, powerful drive motor, totally enclosed oil bath lubricated drive train, and dual brake reliability.

FEATURES

1. Easily accessible control enclosure facilitates maintenance
2. D.C. disc motor brake for smooth braking action
3. High torque, heavy-duty hoist motor for smooth hoisting action
4. Block operated upper limit stop to limit upward hook travel
5. Convenient one-handed push-button control for easy operation of all motions
6. 115 volts at push button for operator safety
7. Push-button cable with built-in strain reliever cable as used on single speed hoist applications. (All others use a separate steel strain reliever cable.)
8. Improved plow steel pre-formed cable for maximum strength and life
9. Full-swiveling, heat-treated forged steel hook with spring loaded latch
10. Shrouded lower block to help prevent pinched fingers
11. Alloy aluminum gear case and cover is light-weight yet rugged
12. Oil level plug permits easy inspection of oil level
13. Anti-friction bearings throughout for a long lasting hoist drive train
14. Positive action mechanical load lowering control brake, also acts as a part of the hoist holding brake system
15. Triple reduction helical/spur gearing operates in oil bath lube for maximum gearing life
16. Deep grooved, large diameter rope drum helps prevent rope overwrap for longer wire rope life
17. Heavy welded steel frame ensures precise fit for long hoisting machinery life

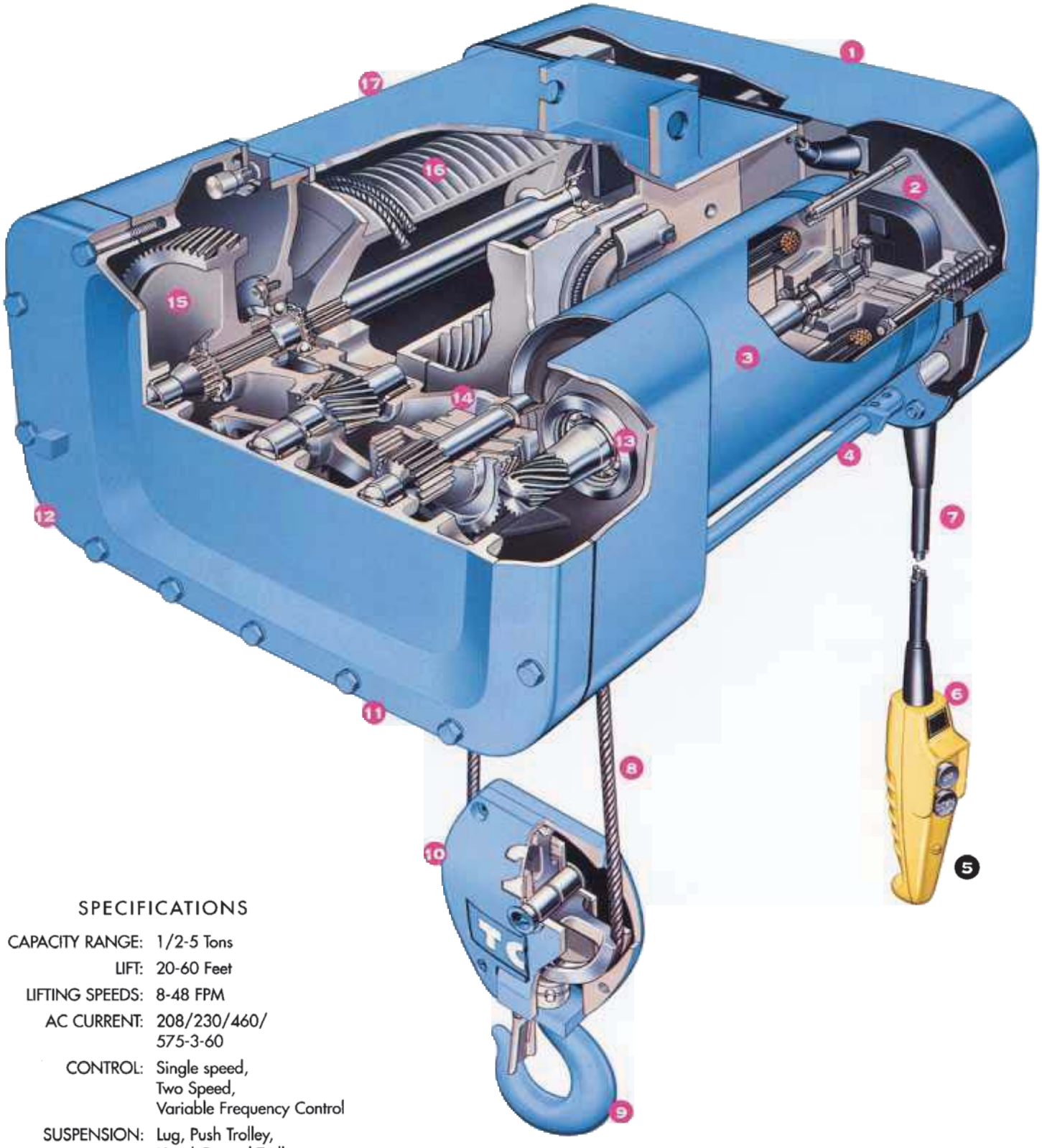

SPECIFICATIONS

CAPACITY RANGE:	1/2-5 Tons
LIFT:	20-60 Feet
LIFTING SPEEDS:	8-48 FPM
AC CURRENT:	208/230/460/ 575-3-60
CONTROL:	Single speed, Two Speed, Variable Frequency Control
SUSPENSION:	Lug, Push Trolley, Hand Geared Trolley and Motor Driven Trolley

SERIES 700

700 Series wire rope hoists are designed and manufactured for heavy-duty service. This workhorse is built to deliver, day-in and day-out, under tough operating conditions. 700 Series hoists are built to take even the most demanding job cycles in stride, yet can be relied upon to handle your most delicate loads with precision control.

Their compact design, with high hook lift and closer end approaches, maximizes hook coverage within an existing facility, reducing or eliminating the need for costly rebuilding or remodeling. 700 Series hoists achieve an unusually high hook lift, without resorting to design compromises.

This line offers the greatest range of lifting speeds, controls, headroom and mounting options of any hoists on the market today. 700 Series hoists are available in both electric and air powered models. Options include standard and low headroom, deck and base mounted models, with a choice of single reeving or true vertical lift. The lug is integral with the all-steel, one-piece welded frame, and is designed for stationary mounting from an overhead structure or with any of our trolley options.

FEATURES

1. One-piece welded steel frame ensures precise fit and long hoisting machinery life
2. Alloy aluminum gear case and cover is lightweight yet rugged
3. Direct acting D.C. brake solenoid for smooth braking action
4. Multiple disc motor brake for long life and maximum braking efficiency
5. Bearings supported in an independent gear case spider give a precise fit, and allow removal of the gear case cover without disassembly of the gearing
6. Hinged control panel cover permits easy access to the control components
7. Improved plow steel preformed wire rope for maximum strength and life
8. Full-swiveling, heat-treated forged steel hook with spring loaded latch
9. Shrouded lower block to help prevent pinched fingers
10. Push-button control pendant for easy one-handed operation
11. Rugged, low-maintenance magnetic contactor control
12. High torque, heavy-duty hoist motor for smooth load handling
13. Watershed and gaskets for tight frame cover seal and protection of internal components
14. Integrally welded mounting lug permits various trolley attachment options
15. Block operated limit switch limits upward hook travel
16. Rope anchor, easily accessible for inspection and maintenance
17. Deep grooved, large diameter rope drum helps prevent rope overwrap for longer rope life
18. Double reduction helical gearing provides a smooth, quiet drive train
19. Positive action mechanical load lowering control brake, also acts as a part of the hoist holding brake system

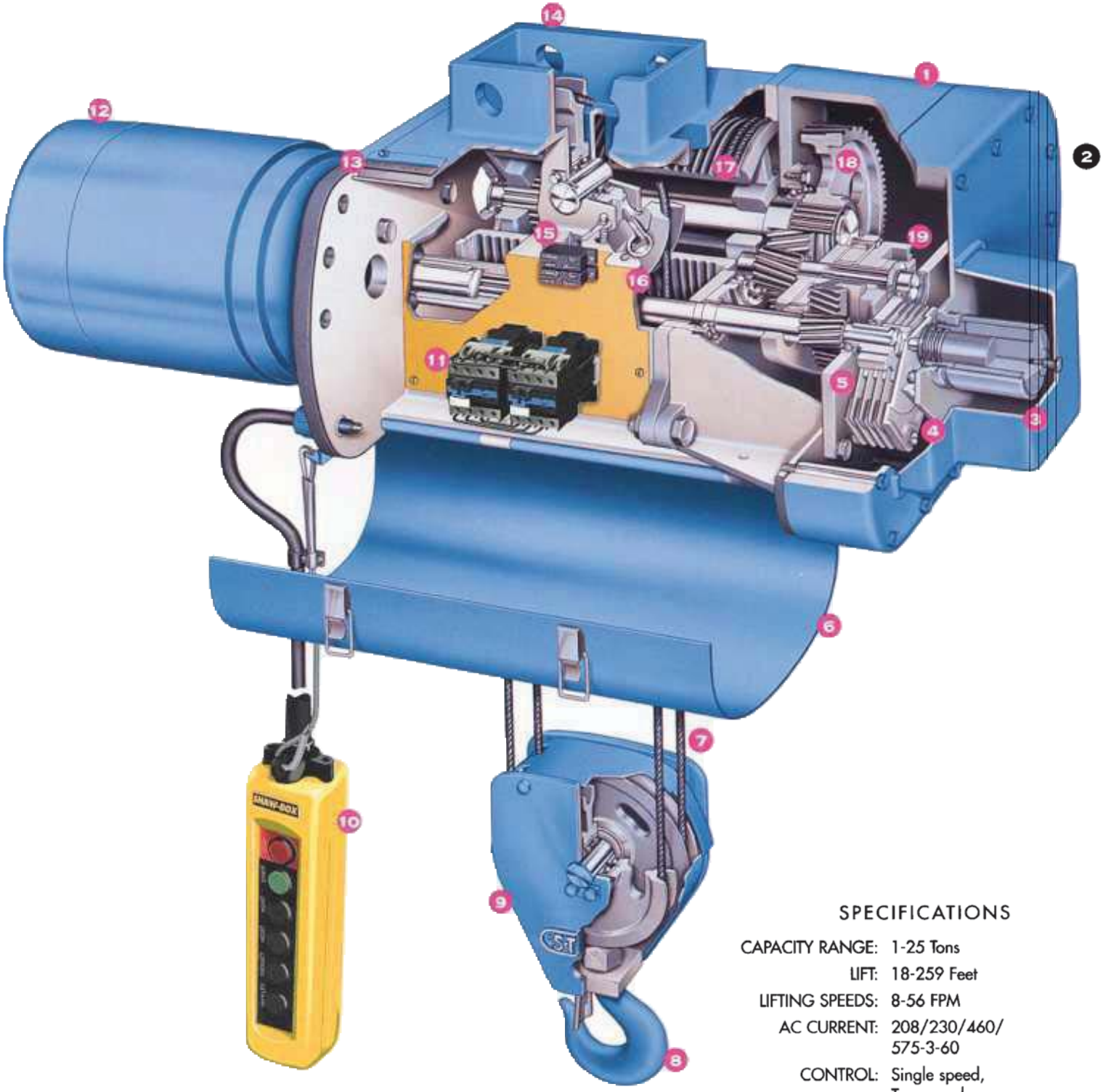

SPECIFICATIONS

CAPACITY RANGE:	1-25 Tons
LIFT:	18-259 Feet
LIFTING SPEEDS:	8-56 FPM
AC CURRENT:	208/230/460/ 575-3-60
CONTROL:	Single speed, Two speed, Variable Frequency Control
SUSPENSION:	Lug, Push Trolley, Hand Geared Trolley, Motor Driven Trolley, Deck and Base

SERIES 700/800 STANDARD FEATURES

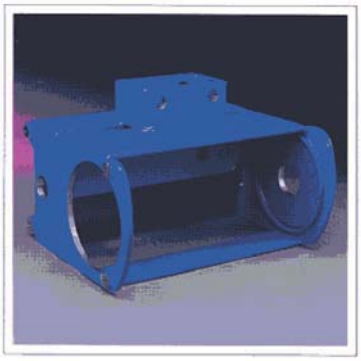

Welded Steel Frame

One-piece welded frame, fabricated from rolled steel sections, precision machined for long life and accurate bearing and component alignment. (700 Series frame illustrated)

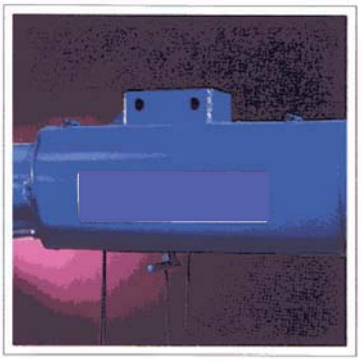

Lug Suspension

Permits the hoist to be mounted in a permanent location. (Mounting hardware not included)

Precision Machined Gearing

For uniform tooth mesh and large contact surface. Operates in a totally enclosed, oil bath lubricated gear case. Gear trains consist of two or three reductions, using helical and/or spur gearing.

Automatic Load Brake

Weston self-adjusting type, operates in the oil bath of the hoist gear case for smooth lowering control. Capable of holding the load independent of the hoist motor brake. (700 Series load brake illustrated)

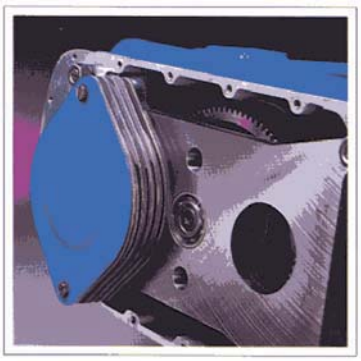

Hoist Motor Brake

Short stroke, 150% torque spring-set D.C. rectified disc type brake provides quiet operation and long life. (700 Series multiple disc brake illustrated)

Machined Rope Drum

Large diameter, welded construction — deep grooved and precision machined to give maximum rope life. Pictured is a right and left hand grooved true vertical lift drum.

Dead End Rope Anchor

Used on single reeved hoists. Easily accessible and part of the one-piece welded frame, it securely anchors the rope compression thimble fitting which is swaged to the rope ends. True vertical lift hoists have both ends of the steel rope dead ended to the rope drum.

Shrouded Lower Block

Helps prevent fingers from being pinched between rope and sheaves and prevents dirt buildup. All hooks are provided with spring loaded safety latches.

Block Operated Limit Switch

For additional protection of operator, hoist, and load. Positive acting, momentarily reverses the hoisting motion if lower block drifts too high. (700 Series block limit switch illustrated)

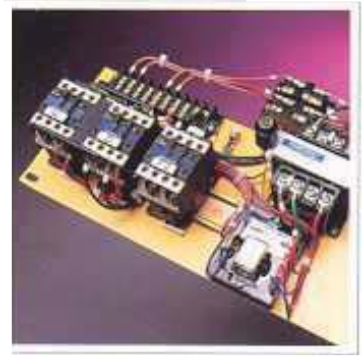

Heavy-Duty Controls

Designed for a clean, open layout to maximize performance and ease of maintenance. Contactors are oversized for increased life. Panels are housed in a dust resistant compartment designed for easy access and serviceability. (700 Series hoist control illustrated)

Hoist Motors

High starting torque type, designed specifically for hoisting, with permanently lubricated ball bearings. Motors are totally enclosed, non-ventilated (T.E.N.V.) with class F insulation, and provided with an automatic reset, temperature actuated switch in the windings to provide over current protection.

Convenient Push-Button Control

All motions can be controlled from a convenient, easy to operate push-button control station suspended from the hoist. An external strain reliever cable extends cable life and prevents pulling the control cable from the hoist electrical connection on four button and larger stations.

SERIES 700/800 OPTIONAL FEATURES

Push Trolley Suspension

Push trolleys are used for mounting hoists on monorails or single girder crane bridges. Operator can quickly move loads by pushing on the load.

Hand Geared Trolley Suspension

For moving loads where accurate spotting is essential or when operator should not touch the load.

Motor Driven Trolley Suspension

Used for moving loads quickly over long distances and where accurate load spotting is needed. Control push buttons can be suspended from hoist or crane bridge.

Deck Mounted Hoists

Used for applications that require a stationary hoist, or for construction of a top-running trolley.

Top Running Double Girder Trolleys

Provides a combination of lower headroom, higher hook lift, and closer end approaches. Maximizes hook coverage within existing facility, without costly remodeling or rebuilding.

Air Operated Hoists

Air operation is available for all SHAW-BOX hoists where precise spotting or slow hoisting speeds are required, or where an electrically powered hoist may not be suitable. (Illustrated is an air-piston motor driven 700 Series hoist)

Explosion Proof Hoists

In addition to normal operating conditions, all SHAW-BOX hoists may be customized for operation in hazardous locations. Lift-Tech designs each hazardous location hoist to meet or exceed National Electrical Code standards. (800 Series explosion proof hoist illustrated)

Spark Resistant Features

Bronze and high bronze alloys incorporated in key components such as hooks, lower blocks and wheels, along with stainless steel wire rope, help prevent incidental sparking in hazardous locations.

Special Application Motors

For special applications such as 60 minute rating, mill and chemical duty, and tropical proofing are available on many hoist models.

Variable Frequency Control

Can be provided for any SHAW-BOX hoist or trolley motion where precise spotting or slow hoisting speeds are required. Available in two, three, or five step control, or two step infinitely variable.

Weight Watcher Overload Control

A factory set mechanical overload clutch built into the hoist drive train prevents lifting excessive overloads. (700 Series overload clutch illustrated with the cover removed)

Other Options:

- *Low Headroom Hoists*
- *Radio Control*
- *Screw Type Limit Switches*
- *Power Circuit Limit Switches*
- *Hot Metal Applications*
- *Magnet Applications*
- *Epoxy Paint*
- *NEMA 12, 3R, or 4 Control Enclosures*
- *Panel Heaters*
- *Motor Heaters*
- *Over Capacity Lift Protection*
- *Warning Lights/Horns*
- *Patented Track Wheels*
- *Double Hook Hoists*

Photos shown are for illustrative purposes only. The actual products may vary in color and design.

Base Mount 700 Series Wire Rope Hoist.

Hoist Cat. # 72B05-035D27-1-SPX

- **Capacity: 5 U.S. Ton**
- **Gage:** Unknown
- **Lift:** 27'-0" TVL
- **Pendant Drop:** No push button station
- **Hoist Speed:** 27 fpm
- **Hoist Motor:** 10 hp
- **Rope:** 6 PD 5/16"
- **Trolley Speed:** N.A.
- **Trolley Motor:** N.A.
- **Top of hoist to mounting feet:** Approx. 18"
- Customer to supply Variable Frequency controls.
- Hoist motor to be inverter duty, 60 minute rated, Class "H" insulation.
- Junction box is not provided.
- Upper block and upper/lower rotary-geared limit switches.
- Steel sheaves in both upper and lower block assemblies.
- Hoist will not be load tested prior to shipment.
- **Power supply:** 460v 3ph 60hz
- **Equipment rated for "H4" Service**
- **Approx. weight:** 1,300 lbs.

Additional information showing the packaged hoist meets specification

vi. **Hook Block**

Commercial Load Block

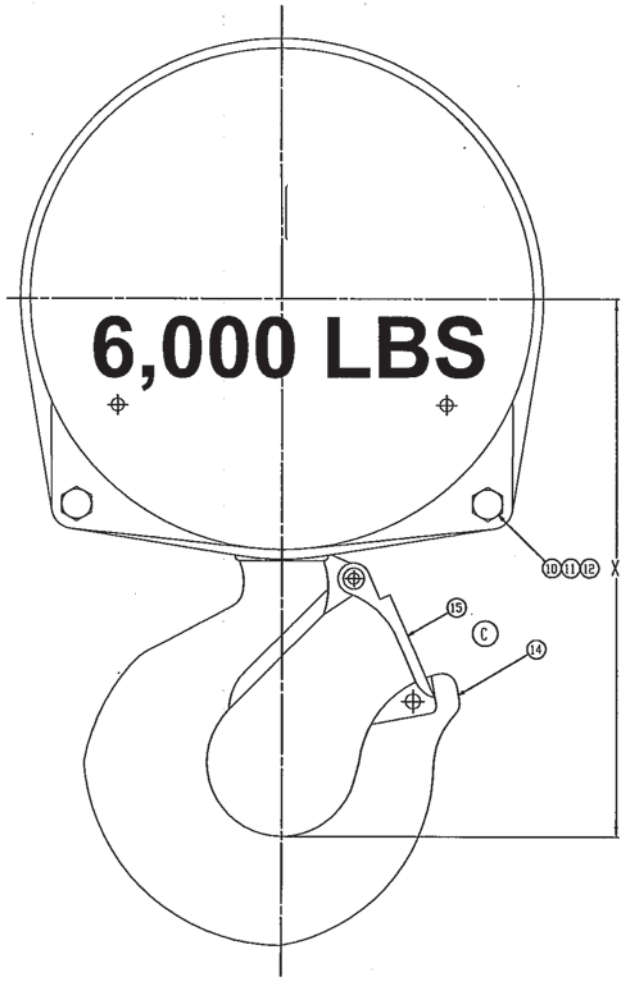

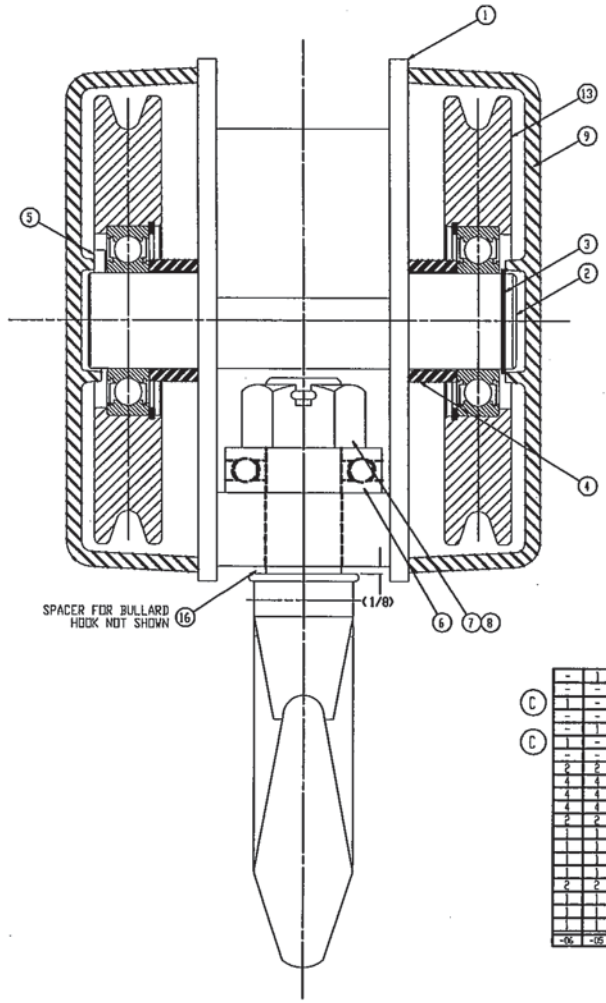

	PART NO.	SHEAVE TYPE	HOOK TYPE	DIMENSION 'X'
C	69554-01	NYLON	STANDARD	9.02
	69554-02	NYLON	BULLARD	10.44
	69554-03	NYLON	BRONZE	10.13
C	69554-04	STEEL	STANDARD	9.02
	69554-05	STEEL	BULLARD	10.44
	69554-06	STEEL	BRONZE	10.13

NOTES:

1. 18:1 RATIO - SHEAVE PITCH DIAMETER TO ROPE DIAMETER
2. SHEAVES FOR 3/8" XIP WIRE ROPE

B

	-06	-05	-04	-03	-02	-01	ITEM	REF #	ING SZ	PART NO.	DESCRIPTION	LENGTH	WT.
	-	1	-	-	1	-	16		A	41797	SPACER		
	-	-	1	-	-	1	15		-	PA7582	LATCH KIT		
C	1	-	-	1	-	-	15		-	PA7583	LATCH KIT		
	-	-	1	-	-	1	14		B	70892	HOOK, STANDARD		
C	-	1	-	-	1	-	14		A	41794	HOOK, BULLARD		
	1	-	-	1	-	-	14		B	70900	HOOK, BRONZE		
	-	-	-	2	2	2	13		C	69561	NYLON SHEAVE ASSEMBLY		
	2	2	2	-	-	-	13		C	69562	STEEL SHEAVE ASSEMBLY		
	4	4	4	4	4	4	12		A	22-SC	HEX NUT		
	4	4	4	4	4	4	11		A	17-SC	LOCKWASHER		
	4	4	4	4	4	4	10		A	35-5-20	HEX HEAD BOLT		
	2	2	2	2	2	2	9		C	69589	LOAD BLOCK COVER		
	1	1	1	1	1	1	8		-	PA1771	COTTER PIN		
	1	1	1	1	1	1	7		A	26-20	SLOTTED HEX NUT		
	1	1	1	1	1	1	6		-	PA1082	BEARING		
	1	1	1	1	1	1	5		-	PA4607	ROLL PIN 3/16 x 3/4		
	2	2	2	2	2	2	4		A	69563	SPACER		
	1	1	1	1	1	1	3		-	PA7349	RETAINING RING#RS157		
	1	1	1	1	1	1	2		A	69587	AXLE		
	1	1	1	1	1	1	1		D	69586	LOAD BLOCK FRAME		

NEXT ASS'Y NO. | REF B

UNLESS OTHERWISE SPECIFIED BREAK ALL SHARP EDGES

TOLERANCES ON DIMENSIONS AND
THREE PLACE DECIMAL ±.005 0.005
TWO PLACE DECIMAL ±.03 0.030
FRACTIONAL ±1/64 11/64
FRACTIONAL ±1/32
ANGLES ±1

THIS DOCUMENT AND ALL DATA CONTAINED HEREIN IS THE PROPERTY OF ACCO AND IS SUPPLIED IN CONFIDENCE FOR EVALUATION PURPOSES ONLY AND UNDER THE EXPRESS CONDITION THAT IT IS NOT TO BE REPRODUCED OR TRANSMITTED TO OTHERS WITHOUT WRITTEN AUTHORIZATION, IS NOT TO BE USED IN ANY WAY DETRIMENTAL TO THE INTERESTS OF ACCO AND IS TO BE RETURNED UPON DEMAND.

METALLURGY APPROVAL BY: DATE
CHECKED BY: DATE
APPROVED BY: DATE
REVISION NO.

NAME: LOAD BLOCK ASSEMBLY 3 TON CAPACITY

WEIGHT: HEAT TREAT EV-T

DR. BY: R.A. DATE: 2/23/93 SCALE: 1:1

D 69554 SHEET - REV C

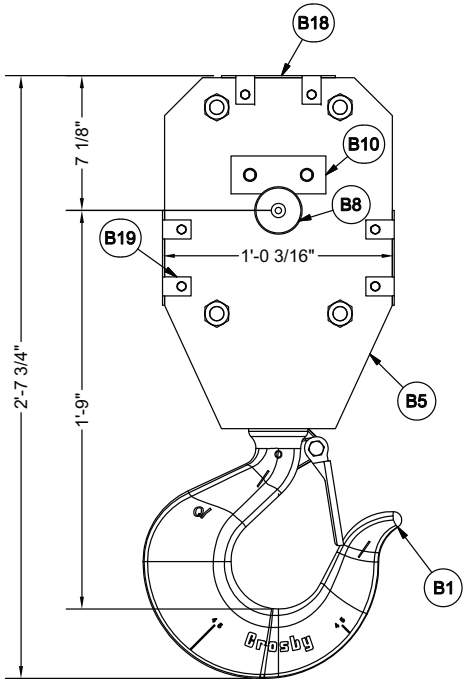

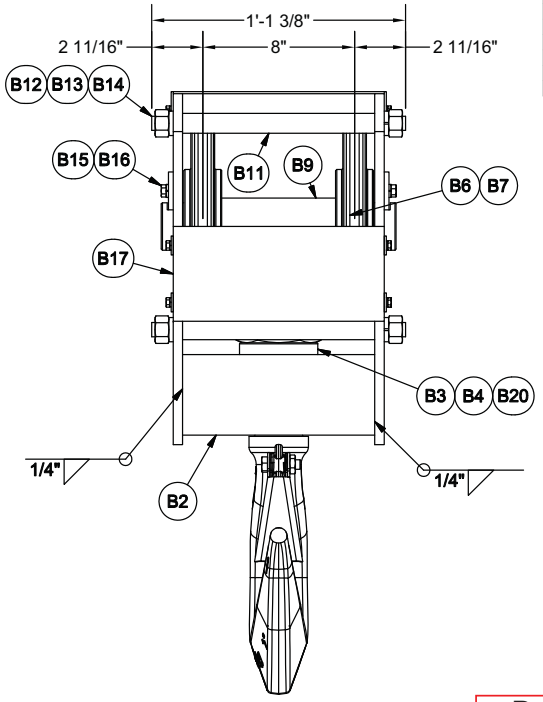

Built-up Load Block

TOTAL WEIGHT: 315 LBS

BoM

ITEM	QTY	PART NAME	DESCRIPTION	MATERIAL	MANUFACTURER	WEIGHT (LBS)
B1	1	LOAD HOOK	S319 (O) W/ SS-4055 LATCH	CARBON	CROSBY	75
B2	1	TRUNNION	4 1/4" X 4 7/8" X 10 1/8"	A36	MCB	59
B3	1	THRUST BEARING	RT621	---	INA	5
B4	1	HOOK NUT	2 1/2 - 8 UN HH	---	---	5
B5	2	SIDE PLATE	1/2" X 12" X 1'-6 1/2" PLATE	A36	MCB	31
B6	2	SHEAVE BEARING	MR48 - MI40	---	McGILL	4
B7	2	SHEAVE	11 1/2" DIA X 2"	A36	MCB	33
B8	1	SHEAVE PIN	2 1/2" DIA X 12 5/8"	1018 CR	MCB	17
B9	1	SHEAVE SPACER	3" O.D. 2 17/32" I.D. X 6"	A36	MCB	4
B10	2	SHEAVE PIN KEEPER	1/4" X 2" FLAT X 5"	A36	MCB	1
B11	4	SPACER PIPE	3/4 SCH 40 PIPE X 10 1/8"	---	MCB	1
B12	4	SPACER ROD	3/4" THREADED ROD X 1'-1 3/8"	GR. 8	MCB	1
B13	4	SPACER NUT	3/4 - 10 UNC HHCS	GR. 8	---	---
B14	4	SPACER LOCK WASHER	3/4" LOCK WASHER	F436	---	---
B15	4	KEEPER BOLT	1/2 - 13 UNC HHCS X 3/4"	GR. 5	---	---
B16	4	KEEPER LOCK WASHER	1/2" LOCK WASHER	F436	---	---
B17	2	SIDE COVER	12 GAUGE SHEET 5" X 11 1/8"	A36	MCB	2
B18	1	TOP COVER	12 GAUGE SHEET 6" X 11 1/8"	A36	MCB	2
B19	12	COVER TAB	12 GAUGE SHEET 1 X 1 1/2"	A36	MCB	---
B20	1	ROLL PIN	3/8" DIA X 3 7/8"	---	---	---

REVISIONS

ZONE	REV	DESCRIPTION	DATE	APPROVED

DEPARTMENT OF THE NAVY — NAVAL FACILITIES ENGINEERING COMMAND

NAVY CRANE CENTER

NORFOLK — VIRGINIA

PROFESSIONAL ENGINEER'S SEAL:

CONTRACT NUMBER:

DRAWING INFORMATION — DATE

DESIGNED:

CHECKED:

SUPV. ENGR:

CONTRACTOR'S DRAWING NUMBER:

10 TON OET CRANE

BLOCK DIMENSION & COMPONENTS

SIZE: D — GROUP NO. — NCC DWG NO. — REV: -

SCALE: AS NOTED — SHEET 1 OF 1

vii. **Bumpers**

Bridge Bumper

WHO WE ARE | PRODUCT SOLUTIONS | SUCCESS STORIES | WHY CHOOSE POLYURETHANE | INDUSTRIAL SOLUTIONS

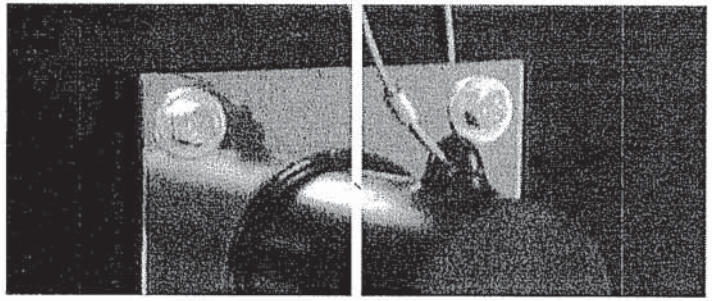

» Design Ideas
» News & Events
» Home
» Contact Us
» MSDS

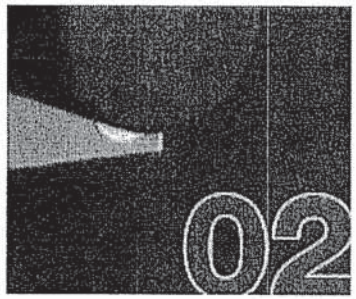

[redacted] Crane Bumper Report

Bumpers are required for a crane bridge. They must be able to meet the AISE specifications shown below. Two-bumper systems will be used.

Crane Bridge

Weight:	49,300 lb
Speed:	100 fpm
Load rating:	100 %
Deceleration rating:	50.0 %
Maximum average deceleration:	16.1 fps²

Bumper ID:	CE-20-K5
Load capacity (per bumper):	2,430 ft·lb
Force transmitted to structure at 100% speed (per bumper):	8,570 lb
Deflection at 100% speed:	2.98 in
Maximum average deceleration from 50% speed:	3.56 fps²
Maximum deceleration from 50% speed:	5.60 fps²

PART NO.	A	B	C	D	DESCRIPTION
CE-K2-SD	2	2.92	3/16	2 1/2	WITHOUT EYE
CE-K3-SD	3	4.22	3/16	3 1/2	WITHOUT EYE
CE-K4-SD	4	5.73	3/16	4 1/2	WITHOUT EYE
CE-K5-SD	5	7.22	1/4	5 1/2	WITHOUT EYE
CE-K6-SD	6	8.74	1/4	6 1/2	WITHOUT EYE
CE-K2-SD-WE	2	2.92	3/16	2 1/2	WITH EYE
CE-K3-SD-WE	3	4.22	3/16	3 1/2	WITH EYE
CE-K4-SD-WE	4	5.73	3/16	4 1/2	WITH EYE
CE-K5-SD-WE	5	7.22	1/4	5 1/2	WITH EYE
CE-K6-SD-WE	6	8.74	1/4	6 1/2	WITH EYE

a

LVL	DATE	REVISION
0	3-13-03	REDRAWN ON CAD WAS SKETCH 6202-SK
1	3-13-03	a REVISED B DIMS.
2	4-9-03	b REMOVED EYE
3	4-17-06	c ADDED -WE DETAILS

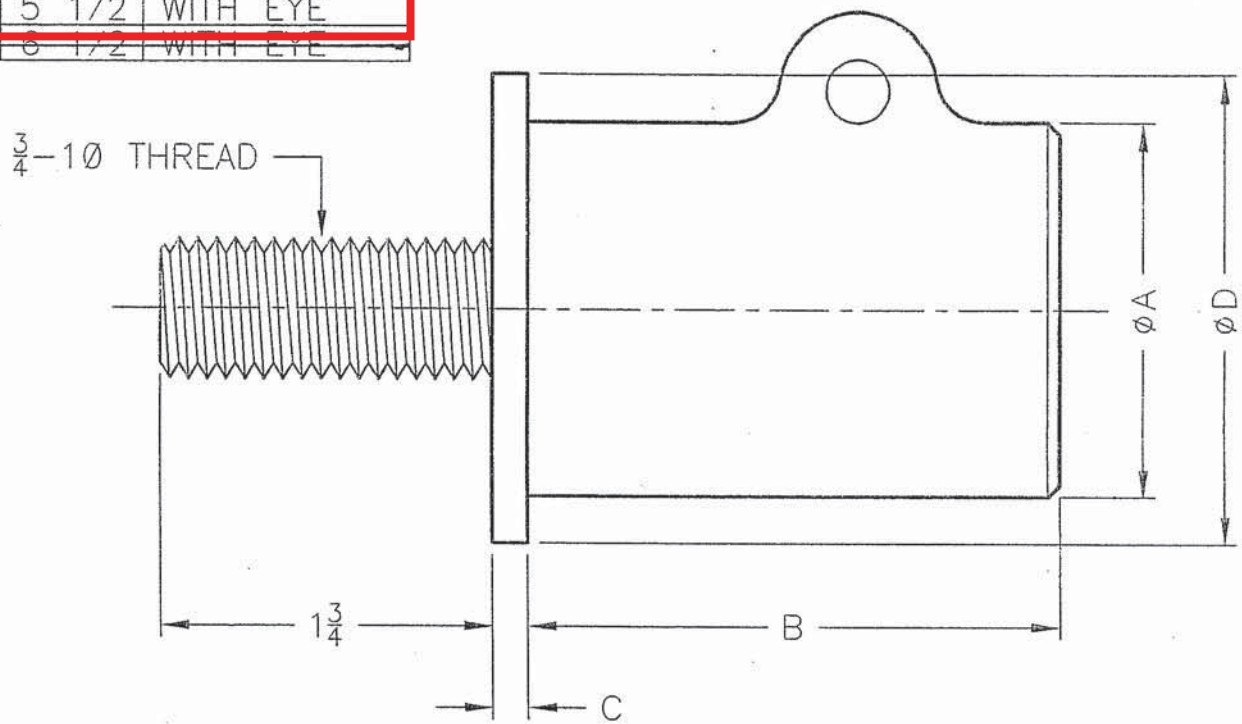

PART NO. AS SHOWN

PART NAME: CE-K-SD STUD BUMPERS

UNLESS OTHERWISE SPECIFIED, TOLERANCES ARE AS FOLLOWS:

FRACTIONAL
METAL MAX(±1/32, ±.33%)
POLYURETHANE MAX(±1/32, ±.50%)

HARDNESS
SHORE "A" ±5 SHORE "D" ±5

DECIMAL
X.XX ±.020
X.XXX ±.005
X.XXXX ±.0005

MATL: STEEL

RED POLYURETHANE 90 SHORE "A"

DRAWN BY:

CHECKED BY:

SCALE: FULL

DATE: 3-13-03

CAGE	DRAWING NO.	REV.
2A197	A303031A	3

Note: This graph may be used for both bridge and trolley bumpers.

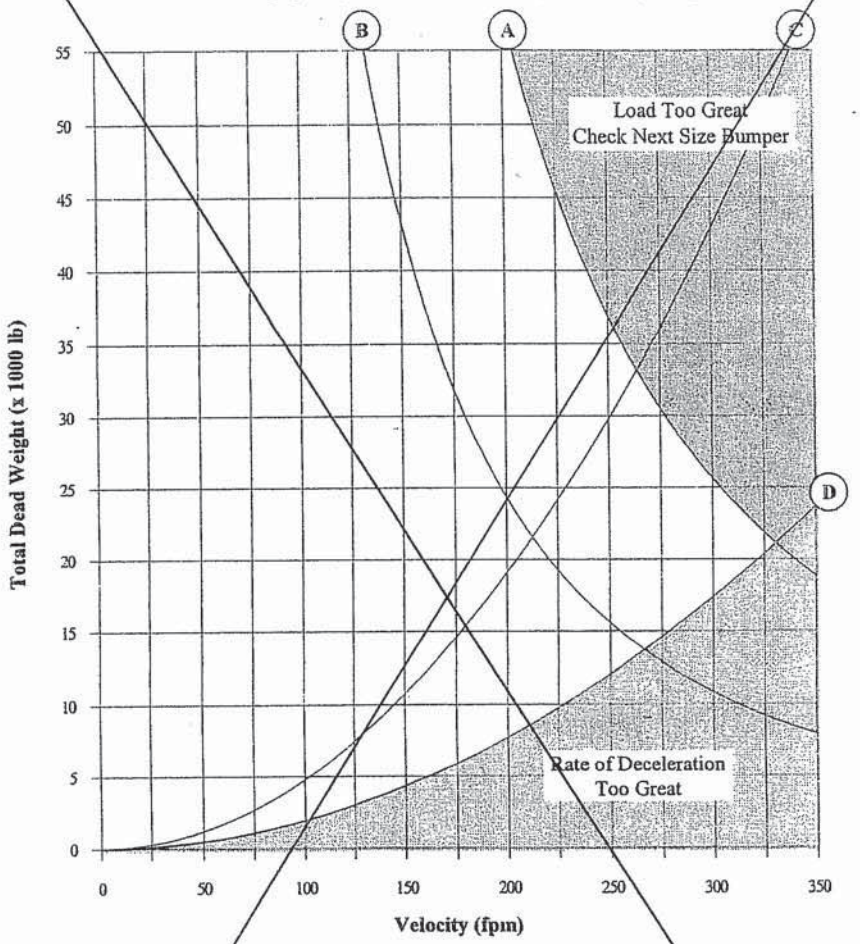

Ratings: Load @ 50%, Deceleration @ 50%

(A) CE-20-K4 Load Capacity 2488 ft·lb

(C) Rate of Deceleration 8.0 ft/s² (¼ g), Average

(B) CE-20-K3 Load Capacity 1050 ft·lb

(D) Rate of Deceleration 16.1 ft/s² (½ g), Average

CE-20-K4

Note: This graph may be used for both bridge and trolley bumpers.

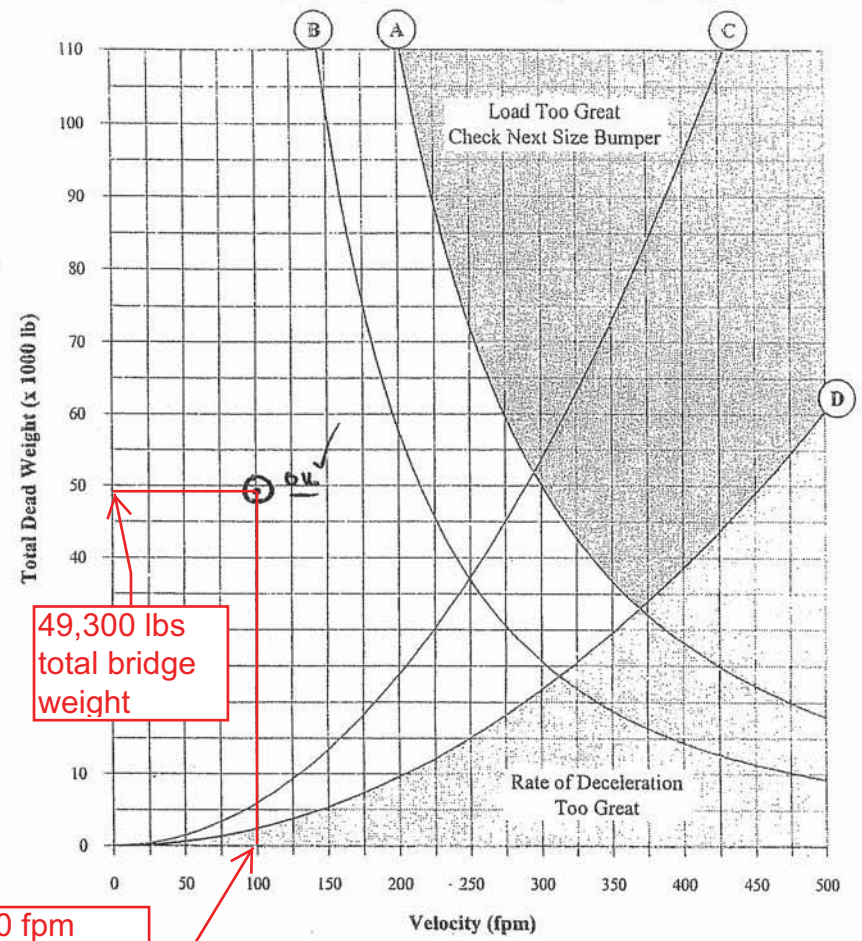

Ratings: Load @ 50%, Deceleration @ 50%

(A) CE-20-K5 Load Capacity 4860 ft·lb

(C) Rate of Deceleration 8.0 ft/s² (¼ g), Average

(B) CE-20-K4 Load Capacity 2488 ft·lb

(D) Rate of Deceleration 16.1 ft/s² (½ g), Average

CE-20-K5

Bumper ID

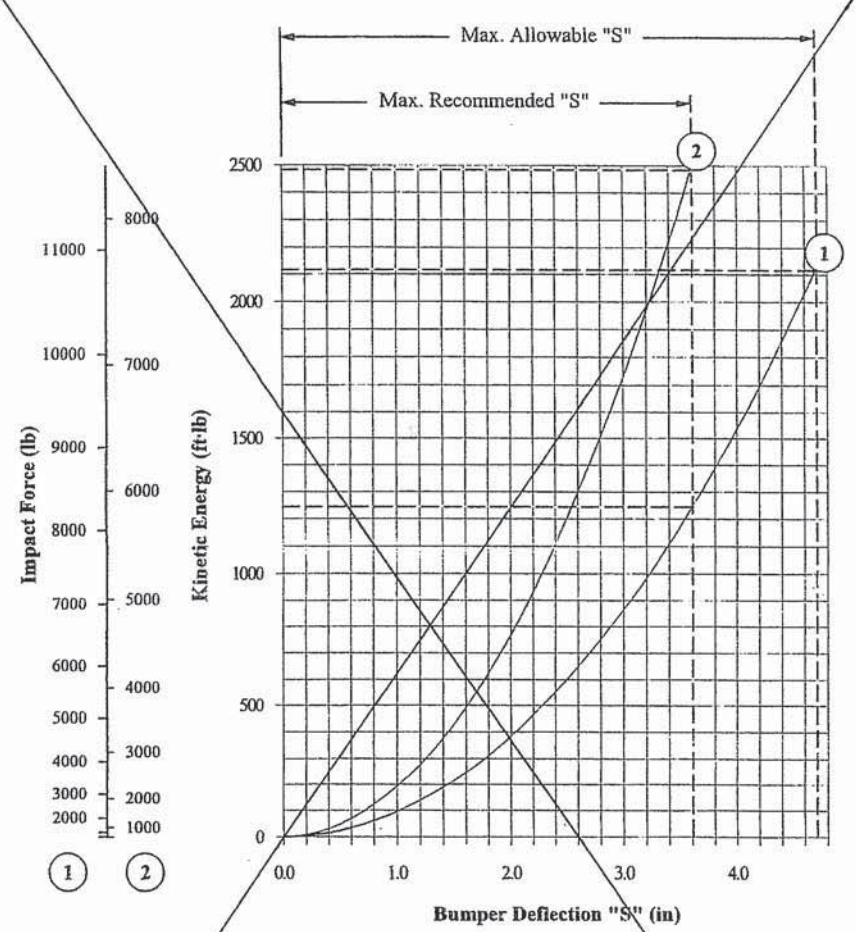

Curve 1 indicates a Single Bumper System. $S^2 = \frac{mV^2}{K}$

Curve 2 indicates a Two Bumper System. $S^2 = \frac{mV^2}{2K}$

Impact Force. $F = KS$

K = 27,646 lb/ft

KINETIC ENERGY / DEFLECTION CURVE

CE-20-K4

8,570 lb Impact at 100% speed

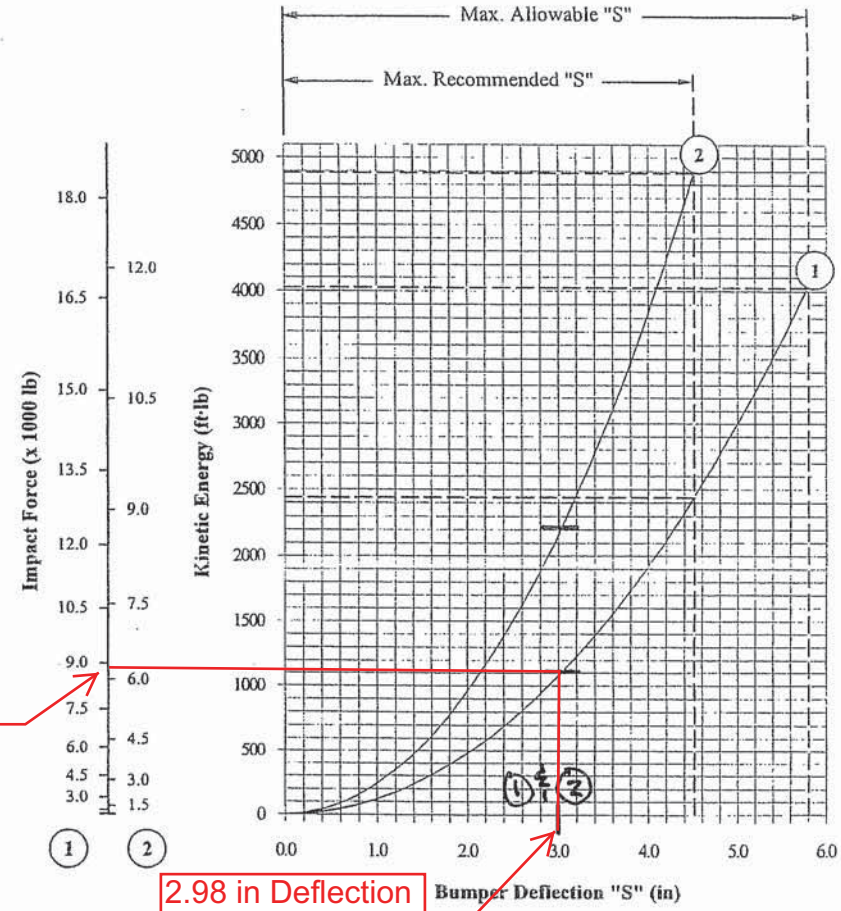

2.98 in Deflection at 100% speed

Curve 1 indicates a Single Bumper System. $S^2 = \frac{mV^2}{K}$

Curve 2 indicates a Two Bumper System. $S^2 = \frac{mV^2}{2K}$

Impact Force. $F = KS$

K = 34,558 lb/ft

KINETIC ENERGY / DEFLECTION CURVE

CE-20-K5

J. Electrical Product Data

Please see the following pages for examples of electrical product data.

SAMPLE LIMIT SWITCH CATALOG DATA

Specialty Control Devices
Limit Switches
CR115E

Geared Rotary Limit Switches
15 Amperes Continuous
AC/DC

Hoist Geared Limit (HGL)
CR115E423102
80:1
115v
Woodruff Key

Uses schematic designation, such that catalog cut is easily referenced from the part on the crane and the schematic.

Complete Part #

CR115E geared rotary limit switch

Application

CR115E geared rotary limit switch provides limit control on rotating-drive equipment. This worm and gear-reduction limit switch may be used in conjunction with motors to open and close overhead doors, to operate cable on cranes and hoists, limit the number of turns on thread-tapping equipment, and on other machine tool applications that require rotating-drive shaft control.

Switches are provided in NEMA Type 1, 4, 7, and 9 enclosures for adapting to specific environmental conditions. Forms having long-dwell cams may be ordered by description. Forms with various contact arrangements of snap-acting switches are listed.

Features

—Long-life: switch equipped with rugged bearings and shaft extension on either or both sides.
—Flexible operation: gear ratios from 20:1 to 1280:1.
—Rapid reset: requires fewer turns to reset.
—Easy adjustment: trip points or operating cams can be quickly and easily adjusted independently with standard screwdriver.
—Versatility control: available with up to four precision snap-acting switches; each will control an independent function.
—Maximum input speed: 3600 RPM.

Product Number Selection Instructions

1. Order limit switch by complete Product Number from pricing information table.
2. Select shaft extension (by type of shaft end and desired side) and substitute suffix number in place of ** in switch Product Number.
   Example: A NEMA Type 1 enclosed switch with 4 NO-4 NC snap-acting contacts, a 320:1 cam ratio, and a standard plain-end shaft extension on the left side is desired.
3. Order: CR115E146111 at **$636.00, GO-10G6.**

Reference Publications

Instructions	GEH-2458

CR115E

Geared Rotary Limit Switches

Snap-Acting Forms (0.020 in. contact gap) (INO-INC per switch unit)

Nominal Input Shaft to Cam Ratio	Max. Number of Turns of Input Shaft to Trip Switch[1]	Min. Number of Turns of Input Shaft to Trip Switch	Overtravel Number of Turns of Input Shaft to Trip Switch[1]	Number of Turns of Input Shaft to Reset Switch	Contact Configuration	Pipe Tap Size (NPT)	Enclosure Type	Product Number	List Price[2] GO-10G6
20:1	19 (16 1/2)	1	1/2 (3)	1/3	2 NO-2 NC	3/4	NEMA Type 1	CR115E1211**	**$231.00**
20:1	19 (16 1/2)	1	1/2 (3)	1/3	4 NO-4 NC	1	NEMA Type 1	CR115E1411**	**$435.00**
40:1	38 (33)	2	1 (6)	2/3	2 NO-2 NC	3/4	NEMA Type 1	CR115E1221**	**$231.00**
40:1	38 (33)	2	1 (6)	2/3	4 NO-4 NC	1	NEMA Type 1	CR115E1421**	**$435.00**
80:1	75 (65)	3	2 (12)	1	2 NO-2 NC	3/4	NEMA Type 1	CR115E1231**	**$231.00**
80:1	75 (65)	3	2 (12)	1	4 NO-4 NC	1	NEMA Type 1	CR115E1431**	**$435.00**
111:1	104 (90)	1	3 1/4 (17 1/4)	1/3	2 NO-2 NC	3/4	NEMA Type 1	CR115E1241**	**$231.00**
111:1	104 (90)	1	3 1/4 (17 1/4)	1/3	4 NO-4 NC	1	NEMA Type 1	CR115E1441**	**$435.00**
222:1	208 (180)	2	6 1/2 (34 1/2)	2/3	2 NO-2 NC	3/4	NEMA Type 1	CR115E1251**	**$432.00**
222:1	208 (180)	2	6 1/2 (34 1/2)	2/3	4 NO-4 NC	1	NEMA Type 1	CR115E1451**	**$636.00**
320:1	300 (260)	1	10 (50)	1/3	2 NO-2 NC	3/4	NEMA Type 1	CR115E1261**	**$432.00**
320:1	300 (260)	1	10 (50)	1/3	4 NO-4 NC	1	NEMA Type 1	CR115E1461**	**$636.00**
445:1	415 (360)	3	13 (68)	1	2 NO-2 NC	3/4	NEMA Type 1	CR115E1271**	**$432.00**
445:1	415 (360)	3	13 (68)	1	4 NO-4 NC	1	NEMA Type 1	CR115E1471**	**$636.00**
640:1	600 (520)	2	20 (100)	2/3	2 NO-2 NC	3/4	NEMA Type 1	CR115E1281**	**$432.00**
640:1	600 (520)	2	20 (100)	2/3	4 NO-4 NC	1	NEMA Type 1	CR115E1481**	**$636.00**
1280:1	1200 (1040)	3	40 (200)	1	2 NO-2 NC	3/4	NEMA Type 1	CR115E1291**	**$450.00**
1280:1	1200 (1040)	3	40 (200)	1	4 NO-4 NC	1	NEMA Type 1	CR115E1491**	**$654.00**
20:1	19 (16 1/2)	1	1/2 (3)	1/3	2 NO-2 NC	3/4	NEMA Type 4	CR115E4211**	**$261.00**
20:1	19 (16 1/2)	1	1/2 (3)	1/3	4 NO-4 NC	1	NEMA Type 4	CR115E4411**	**$465.00**
40:1	38 (33)	2	1 (6)	2/3	2 NO-2 NC	3/4	NEMA Type 4	CR115E4221**	**$261.00**
40:1	38 (33)	2	1 (6)	2/3	4 NO-4 NC	1	NEMA Type 4	CR115E4421**	**$465.00**
80:1	75 (65)	3	2 (12)	1	2 NO-2 NC	3/4	NEMA Type 4	CR115E4231**	**$261.00**
80:1	75 (65)	3	2 (12)	1	4 NO-4 NC	1	NEMA Type 4	CR115E4431**	**$465.00**
111:1	104 (90)	1	3 1/4 (17 1/4)	1/3	2 NO-2 NC	3/4	NEMA Type 4	CR115E4241**	**$261.00**
111:1	104 (90)	1	3 1/4 (17 1/4)	1/3	4 NO-4 NC	1	NEMA Type 4	CR115E4441**	**$465.00**
222:1	208 (180)	2	6 1/2 (34 1/2)	2/3	2 NO-2 NC	3/4	NEMA Type 4	CR115E4251**	**$462.00**
222:1	208 (180)	2	6 1/2 (34 1/2)	2/3	4 NO-4 NC	1	NEMA Type 4	CR115E4451**	**$666.00**
320:1	300 (260)	1	10 (50)	1/3	2 NO-2 NC	3/4	NEMA Type 4	CR115E4261**	**$462.00**
320:1	300 (260)	1	10 (50)	1/3	4 NO-4 NC	1	NEMA Type 4	CR115E4461**	**$666.00**
445:1	415 (360)	3	13 (68)	1	2 NO-2 NC	3/4	NEMA Type 4	CR115E4271**	**$462.00**
445:1	415 (360)	3	13 (68)	1	4 NO-4 NC	1	NEMA Type 4	CR115E4471**	**$666.00**
640:1	600 (520)	2	20 (100)	2/3	2 NO-2 NC	3/4	NEMA Type 4	CR115E4281**	**$462.00**
640:1	600 (520)	2	20 (100)	2/3	4 NO-4 NC	1	NEMA Type 4	CR115E4481**	**$666.00**
1280:1	1200 (1040)	3	40 (200)	1	2 NO-2 NC	3/4	NEMA Type 4	CR115E4291**	**$480.00**
1280:1	1200 (1040)	3	40 (200)	1	4 NO-4 NC	1	NEMA Type 4	CR115E4491**	**$684.00**
20:1	19 (16 1/2)	1	1/2 (3)	1/3	2 NO-2 NC			115E7211**	**$630.00**
20:1	19 (16 1/2)	1	1/2 (3)	1/3	4 NO-4 NC			115E7411**	**$834.00**
40:1	38 (33)	2	1 (6)	2/3	2 NO-2 NC			115E7221**	**$630.00**
40:1	38 (33)	2	1 (6)	2/3	4 NO-4 NC	1	NEMA Type 7-9	CR115E7421**	**$834.00**
80:1	75 (65)	3	2 (12)	1	2 NO-2 NC	3/4	NEMA Type 7-9	CR115E7231**	**$630.00**
80:1	75 (65)	3	2 (12)	1	4 NO-4 NC	1	NEMA Type 7-9	CR115E7431**	**$834.00**
111:1	104 (90)	1	3 1/4 (17 1/4)	1/3	2 NO-2 NC	3/4	NEMA Type 7-9	CR115E7241**	**$630.00**
111:1	104 (90)	1	3 1/4 (17 1/4)	1/3	4 NO-4 NC	1	NEMA Type 7-9	CR115E7441**	**$834.00**
222:1	208 (180)	2	6 1/2 (34 1/2)	2/3	2 NO-2 NC	3/4	NEMA Type 7-9	CR115E7251**	**$828.00**
222:1	208 (180)	2	6 1/2 (34 1/2)	2/3	4 NO-4 NC	1	NEMA Type 7-9	CR115E7451**	**$1032.00**
320:1	300 (260)	1	10 (50)	1/3	2 NO-2 NC	3/4	NEMA Type 7-9	CR115E7261**	**$828.00**
320:1	300 (260)	1	10 (50)	1/3	4 NO-4 NC	1	NEMA Type 7-9	CR115E7461**	**$1032.00**
445:1	415 (360)	3	13 (68)	1	2 NO-2 NC	3/4	NEMA Type 7-9	CR115E7271**	**$828.00**
445:1	415 (360)	3	13 (68)	1	4 NO-4 NC	1	NEMA Type 7-9	CR115E7471**	**$1032.00**
640:1	600 (520)	2	20 (100)	2/3	2 NO-2 NC	3/4	NEMA Type 7-9	CR115E7281**	**$828.00**
640:1	600 (520)	2	20 (100)	2/3	4 NO-4 NC	1	NEMA Type 7-9	CR115E7481**	**$1032.00**
1280:1	1200 (1040)	3	40 (200)	1	2 NO-2 NC	3/4	NEMA Type 7-9	CR115E7291**	**$846.00**
1280:1	1200 (1040)	3	40 (200)	1	4 NO-4 NC	1	NEMA Type 7-9	CR115E7491**	**$1050.00**

Hoist Geared Limit Switch (HGL)

Shows base part # and options.

Note: Insert number from Shaft Extension Type Table where ** appears to complete product number.

[1]Figures shown in parentheses are for long-dwell (45°) cam forms. Order by description. No price addition for long-dwell cam. Contact nearest Representative for prices and data for 180° cam forms.

[2]Prices shown are for shaft extension on one side only. Add **$6.00**, **GO-10G6** for forms with shaft extensions on both sides.

Shaft Extension Type

Description (Type or Shaft End)	Shaft Extension On Right Side	Left Side	Both Sides[3]
Standard Plain-End Shaft	01	11	21[3]
Woodruff Key-Type End Shaft (No. 3 Woodruff key is provided)	02	12	22[3]

[3]Prices shown in pricing information table are for shaft extension on one side only. Add **$6.00**, **GO-10G6** for forms with shaft extensions on both sides.

CR115E

Geared Rotary Limit Switches

Contact Ratings[1]

Alternating Current
Carry Continuous—15 Ampere

Volts	Make	Break
115	40 amp	15 amp
230	20 amp	10 amp
460	10 amp	6 amp
575	8 amp	5 amp

Direct Current
(SPDT Snap-Acting Forms)

Volts	Break
120	0.25 amp
240	0.10 amp
600	—

[1]Double-throw circuits must be same polarity.

Shows specifics to part chosen.

Marked out parts of the catalog cut that are not appropriate to the part chosen.

Outlines and Dimensions (in./mm) For Estimating Only

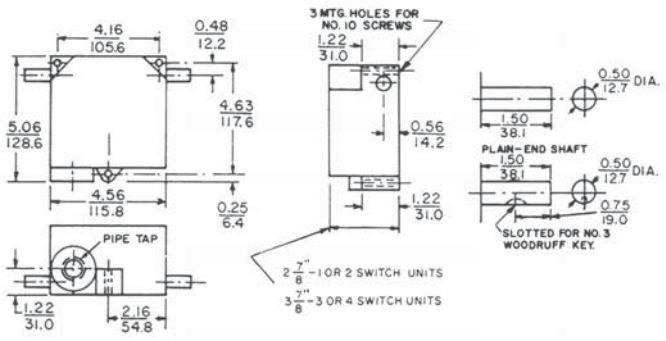

NEMA Type 1 and 4—Approx. shipping wt., 5 lbs.

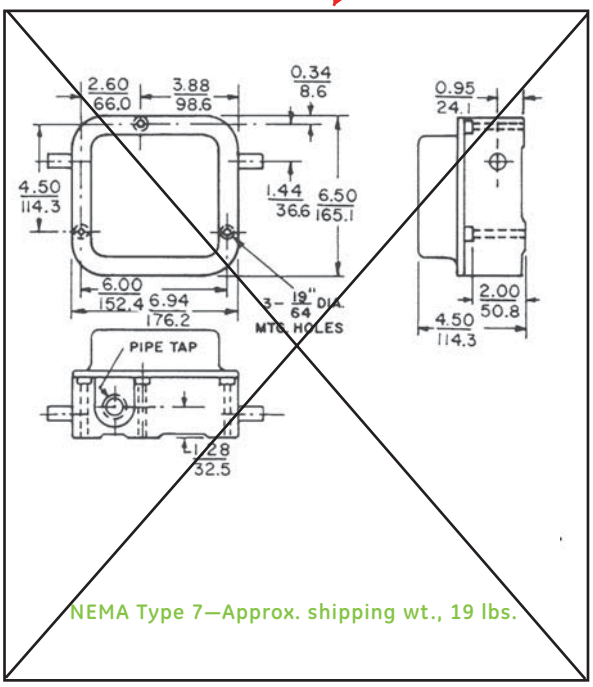

NEMA Type 7—Approx. shipping wt., 19 lbs.

SAMPLE MOTOR CATALOG DATA

Hoist Motor (HM)

Motor Data Sheet

LEYA

Includes all information required by NEC 430.7, including:
(a)Manufacturer's name
(b) Rated voltage and current
(c) Rates frequency and # of phases
(d) Rated full load speed
(e) Rated temperature rise and insulation class
(f) Time Rating
(g) Rate Horsepower

MOTION	HOIST MOTOR
H.P.	30
R.P.M.	1800
FRAME SIZE	286
VOLTAGE	460
PHASE	3
HERTZ	60
F.L. AMPS	34.2
INSULATION CLASS	H
TEMP. RISE	F
TIME RATING	Cont
ENCLOSURE	A-TEFC
LEYA PART NO.	449884-31
TYPE WINDING	Flux Vector
NEMA DESIGN	B
SERVICE FACTOR	1.00

Automatic Reset Temperature Activated Switch (in motor windings)
Vector Duty Motor with Pneuguys 1024 ppr Encoder
Mfg. LEYA Alum Frame
Note: The motor is going to have an auxiliary blower for cooling, the hoist motor comes with a Class F rise. This is considered a better motor than specified.
Aux blower motor is 0.33HP, 460V-3 phase-60Hz, 0.7A

Notes that show specific options that are utilized.

SAMPLE RUNWAY ELECTRIFICATION CATALOG DATA

SD-3E4 1/5

Magic-8 Bar Electrical Conductor Systems

For Overhead Cranes, Trolleys, Monorails, Hoists, Conveyors, Automatic Stacker-Retrieval Systems... any Application that Requires a Reliable, Safe, and Economical Moving Power System.

Submittal shows exactly what components are being used in runway system.

- * 90 AMP Rolled Galvanized Steel
- ~~110 AMP Rolled Galvanized Steel~~
- ~~160 AMP Rolled Stainless Steel~~ Copper Laminated
- ~~250 AMP Rolled Copper Steel Laminated~~
- ~~350 AMP Rolled Electrolytic Copper~~
- ~~500 AMP Extruded Electrolytic Copper~~

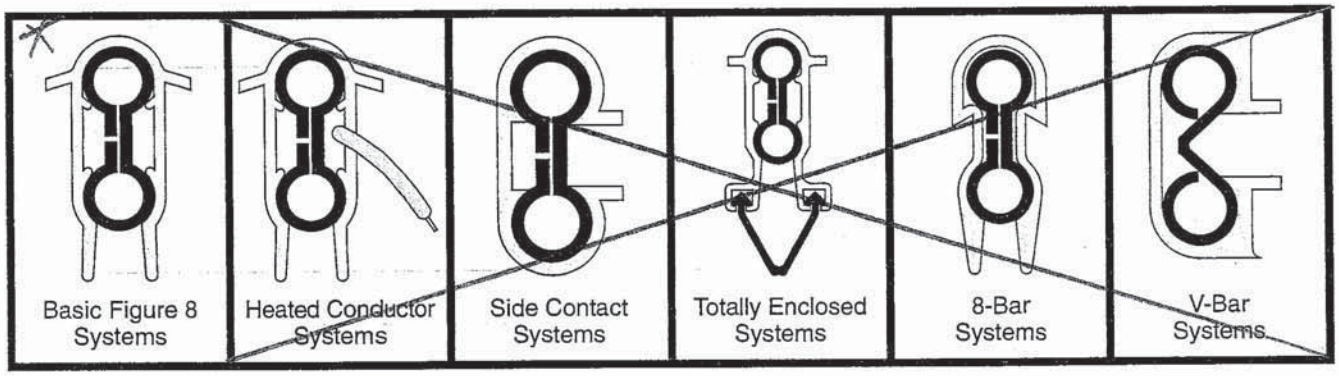

CAUTION

MAKE CERTAIN POWER SUPPLY IS DISCONNECTED BEFORE INSTALLING, REPAIRING, OR WORKING IN THE PROXIMITY OF ANY ELECTRICAL SYSTEM. ONLY QUALIFIED ELECTRICAL PERSONNEL SHOULD INSTALL OR REPAIR THESE PRODUCTS.

SD-3E4 2/5

Typical Conductor Mounting

Note: ←S→ indicates minimum conductor spacing.

Standard Vertical Mounted Conductors

3-Phase System • Bottom Contact • 5 Ft. Maximum Support Spacing

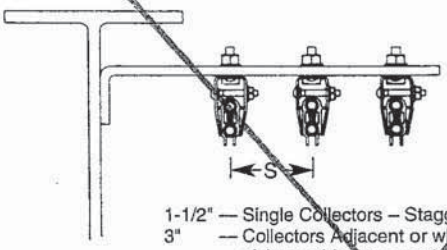

1-1/2" — Single Collectors – Staggered
3" — Collectors Adjacent or when pickup guides are used

Monorail Application

Install two conductors on one side of the beam and one conductor on the opposite side to balance the collector spring forces, particularly on light weight hoists.

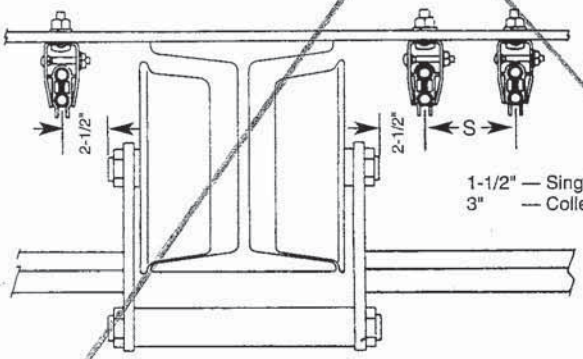

1-1/2" — Single Collectors – Staggered
3" — Collectors Adjacent or when pickup guides are used

Lateral Mounted Conductors

4 Ft. Maximum Support Spacing.
Use only Lateral (L) Model Collectors.

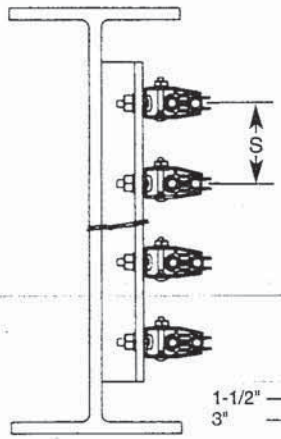

Use Metal Hangers Only on Lateral Systems

1-1/2" — Single Collectors — Staggered
3" — Collectors Adjacent or when pickup guides are used

Clearly shows what mounting configuration will be used.

Figure 8 (FE) Components

	Catalog Number	Weight Pounds	Description
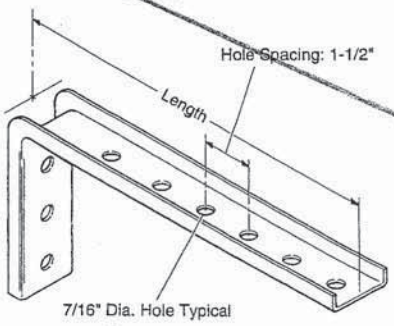			**Angle Brackets for Web Mounting** *Brackets are galvanized 12 gage rolled steel channel. Hangers are priced separately, but will be factory installed at no charge when hanger locations are shown on sketch.*
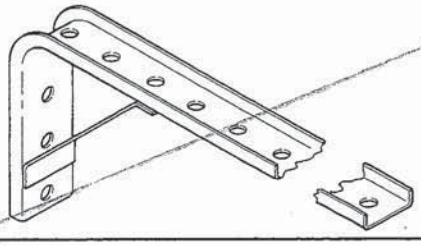	**B-100-BR1A**	1.0	Bracket — 11-1/4" long.
	B-100-BR7A	1.12	Bracket — 15-3/4" long.
	B-100-BR7B	1.18	Bracket with gusset support — 15-3/4" long.
	B-100-BR13A	1.5	Bracket — 20-1/4" long.
	B-100-BR13B	1.57	Bracket with gusset support — 20-1/4" long.

SD-3E4 3/5

	Catalog Number	Weight Pounds	Description
Threads: 3/8-16 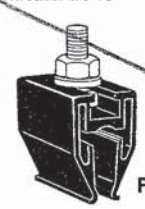 FE-908-2PF FE-908-2SF			**Snap-In Type Hanger Assemblies** *These hangers are not recommended for curves, switches or short runs unless separate anchors are used. Refer to the Figure 8 Installation Instructions.*
	FE-908-2PF	.10	Nylon Insulating Hanger.
	FE-908-2PFS	.10	Nylon Insulating Hanger with Stainless Steel Hardware. *DO NOT USE nylon hangers in temperatures higher than 230°F. DO NOT exceed 4 lb. per foot torque when tightening nut on mounting bolt.*
	FE-908-2SF	.11	Zinc Plated Steel Hanger.
	FE-908-2SFE	.11	Epoxy Coated Steel Hanger.
	FE-908-2SFS	.11	Stainless Steel Hanger with Stainless Steel Hardware.
Threads: 3/8-16			**Snap-In Type Spring Hanger and Insulator Assemblies for Outdoor, Wet and Dirty Applications**
	FE-908-2SFG	.20	Zinc Plated Steel Hanger with Insulator.
	FE-908-2SFFG	.20	Epoxy Coated Steel Hanger with Insulator.
	FE-908-2SFSG	.20	Stainless Steel Hanger with Insulator and Stainless Steel Hardware.
Threads: 3/8-16 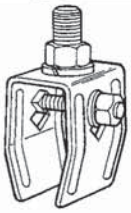			**Clamp Type Hanger Assemblies for All Conductor Systems**
	B-100-2FF	.19	Zinc Plated Steel Hanger.
	B-100-2FFE	.19	Epoxy Coated Steel Hanger. For special environments.
	B-100-2FFS	.19	Stainless Steel Hanger with Stainless Steel Hardware. For special environments.
Threads: 3/8-16			**Clamp Type Hanger and Insulator Assemblies for Outdoor, Wet and Dirty Applications.**
	B-100-2FG	.30	Zinc Plated Steel Hanger with Insulator.
	B-100-2FFG	.30	Epoxy Coated Steel Hanger with Insulator.
	B-100-2FSG	.30	Stainless Steel Hanger with Stainless Steel Hardware.
Threads: 3/8-16 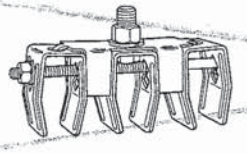			**Clamp Type Special Hanger Assemblies**
	B-100-2F2	.40	Zinc Plated Steel Twin Hanger Assembly. 1-1/2" centers. For indoor applications. Staggered Collectors.
	B-100-2F3	.59	Zinc Plated Steel Triple Hanger Assembly. 1-1/2" centers. For indoor dry applications only. Staggered Collectors.
Threads: 3/8-16 Centers: 1-1/2" 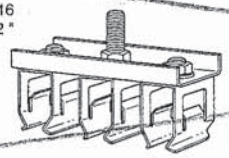 FE-908-2SF3			**Snap-In Type Special Hanger Assemblies**
	FE-908-2PF3	.50	Plastic Triple Hanger Assembly.
	FE-908-2SF3	.53	Zinc Plated Steel Triple Hanger Assembly.
	FE-908-2SF4	.72	Zinc Plated Steel Four-Gang Hanger Assembly.
	FE-908-2SF5	.93	Zinc Plated Steel Five-Gang Hanger Assembly.
Threads: 3/8-16			**Mushroom Insulators with Hardware**
	B-100-1G	.12	30% Glass-filled Nylon — 400°F rated. Suitable for chemical or oil-laden atmospheres.

SD-3E4 4/5

	Catalog Number	Weight Pounds	Description
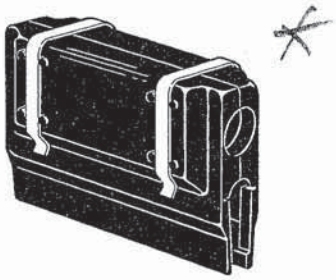			**Power Feeds with Insulating Case**
	FE-908-2CP	.25	90 Amp Rated — Steel. For FE-758-2 systems. Will accept up to # 4 AWG cable.
	FE-1158-2CP	.26	110 Amp Rated — Copper. For FE-908-2 systems. Will accept up to # 2 AWG cable.
	FE-2008-2CP	.63	250 Amp Rated — Bronze. For FE-1608-2 and FE-2008-2 systems. Will accept up to # 1/0 AWG cable.
	FE-3008-2CP	1.10	350 Amp Rated — Cast Bronze. For FE-3008-2 systems. Will accept up to # 3/0 cable.
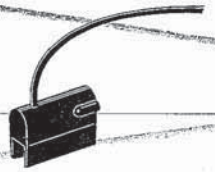			**End Power Feeds**
	FE-758-GCTP	.14	40 Amp Rated. For all systems with FE-758 conductor bar.
	FE-908-GCTP	.14	40 Amp Rated. For all systems with FE-908, FE-1608, FE-2008, and FE-3008 conductor bar.
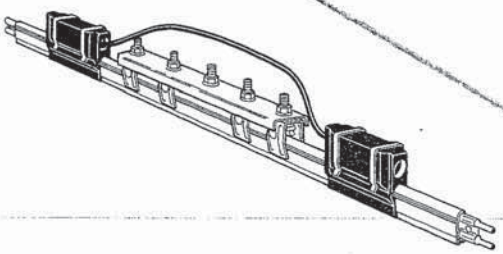 Anchor sets and connector pins are included with the hardware package.			**Expansion Gap Assemblies** *Each assembly consists of a ten-foot conductor bar, insulating cover, connector pins for one end, guide assembly, two power feeds with a jumper cable and hanger set. Refer to the Figure 8 Installation Instructions.*
	FE-758-2H10	7.0	For Indoor System FE-758-2.
	FE-758-2H10-SC	7.0	For Outdoor System FE-758-2-SC.
	FE-758-2H10XT	7.0	For High Temperature System FE-758-2XHT.
	FE-908-2H10	9.0	For Indoor System FE-908-2.
	FE-908-2H10-SC	9.0	For Outdoor System FE-908-2-SC.
	FE-908-2H10XT	9.0	For High Temperature System FE-908-2XHT.
	FE-1608-2H10	10.5	For Indoor System FE-1608-2.
	FE-1608-2H10-SC	10.5	For Outdoor System FE-1608-2-SC.
	FE-1608-2H10XT	10.5	For High Temperature System FE-1608-2XHT.
	FE-2008-2H10	10.0	For Indoor System FE-2008-2.
	FE-2008-2H10-SC	10.0	For Outdoor System FE-2008-2-SC.
	FE-2008-2H10XT	10.0	For High Temperature System FE-2008-2XHT.
	FE-3008-2H10	12.5	For Indoor System FE-3008-2.
	FE-3008-2H10-SC	12.5	For Outdoor System FE-3008-2-SC.
	FE-3008-2H10XT	12.5	For High Temperature System FE-3008-2XHT.
	FE-5008-2H10	16.5	For Indoor System FE-5008-2.
	FE-5008-2H10-SC	16.5	For Outdoor System FE-5008-2-SC.
	FE-5008-2H10XT	16.5	For High Temperature System FE-5008-2XHT.
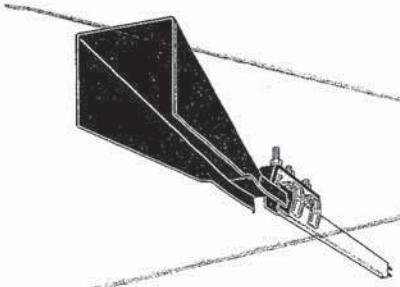			**Special Application Components**
	FE-2JNN3	3.75	Pickup Guide Assembly — 3" wide. Includes clamps and two foot section of system conductor. Specify conductor system.
	FE-2JNN4	4.50	Pickup Guide Assembly — 4" wide. Includes clamps and two foot section of system conductor. Specify conductor system.

SD-3E4 5/5

	Catalog Number	Weight Pounds	Description
Maximum O.A.L.: 28" 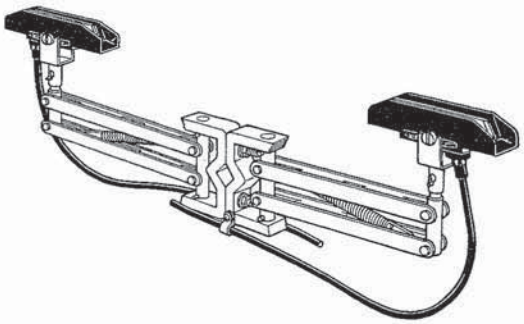 P-200-VT5			**P-Series Collector Assemblies (cont.)**
	~~P-80-VT3~~	~~4.34~~	~~80 Amp Collector — double shoe. Vertical mount.~~
	P-80-LT3	4.35	80 Amp Collector — double shoe. Lateral mount.
	~~P-80-ST3~~	~~4.5~~	~~80 Amp Collector — double shoe. Self-centering.~~
	~~P-200-VT5~~	~~5.0~~	~~200 Amp Collector — double shoe. Vertical mount.~~
	~~P-200-LT5~~	~~4.63~~	~~200 Amp Collector — double shoe. Lateral mount.~~
	~~P-200-ST5~~	~~4.6~~	~~200 Amp Collector — double shoe. Self-centering.~~
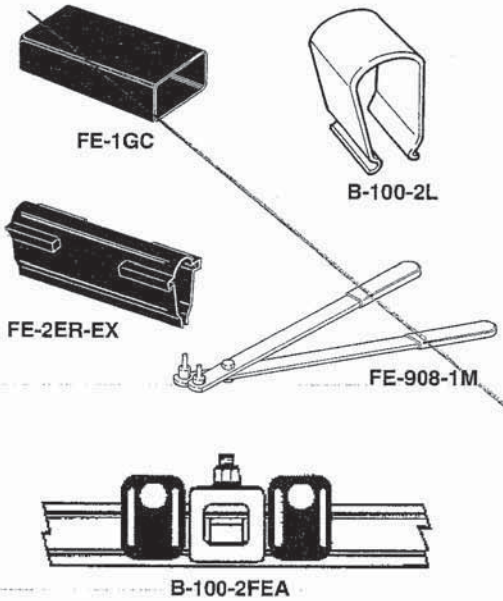 FE-1GC B-100-2L FE-2ER-EX FE-908-1M B-100-2FEA			**Additional Components**
	B-100-2L	.03	Spring Cover Clip — Zinc Plated Steel. Used only to ensure alignment of the cover on laterally mounted systems. Placed midway between hangers.
	B-100-2FEA	.30	Clamp Hanger Set — 2 pieces. Clamps both sides of hanger.
	FE-1GC	.04	Flexible PVC End Cap. For all Figure 8 conductor bars.
	FE-908-A	.02	Nylon Anchor Pin. For drilled anchoring. Two required at each hanger.
	FE-908-1M	2.88	Connector Tool. One tool usually ordered for each new system. Used to pull two sections of bar together.
	FE-908-1MB	.10	Connector Tool Pins — Pair.
	FE-2ER-EX	.05	Splice Cover — Standard black. Use this part number when ordering extra splice covers.
	C-40-B3-SC		Carborendium Insert
	C-100-B5-SC		Cleaning Shoe
			Conductor Bar Cleaning Accessories
			Contact the factory for application.
	C-100-VCT	1.80	Complete C-Series Collector with cleaning head. Vertical mount.
	P-100-VCT	2.19	Complete P-Series Collector with cleaning head. Vertical mount.
	C-100-2ACT	.50	Cleaning Head only for C-Series or B-Series Collectors.
	P-100-2ACT	.57	Cleaning Head only for P-Series Collector.
	B-40-2B3-CI	.17	Cast Iron Cleaning Shoe — 3" long x 1/4" wide.
	B-100-2B5-CI	.26	Cast Iron Cleaning Shoe — 5" long x 1/4" wide.
	C-100-CT	.14	Cleaning Brush — Stainless Steel.
	B-100-TT	.08	Micro Hone — 1/4" x 4".

K. Structural Product Data

Please see the following pages for structural product data samples.

i. End trucks

SAMPLE END TRUCK CATALOG DATA

Rotating Axle End Trucks

Single Girder Top Running

8"Ø CMAA Class "D" Hardened Wheels (400 BHN)

Capacity Tons	Speed HP	Max Span	Wheel Base	Actual Wheel Load w/o Impact 30# Rail	Actual Wheel Load w/o Impact 40# Rail	Weight Pounds	Single Speed w/o Soft Start (**) Model	Variable Frequency Model
Up to 10 Tons	80 FPM 2 @ 1.0	36' - 0"	4' - 6"	15,000	17,600	1,600	R08TSW17054-D	R08TSW17054-F
		48' - 0"	6' - 0"	15,000	17,600	1,800	R08TSW17072-D	R08TSW17072-F
		60' - 0"	7' - 6"	15,000	17,600	2,000	R08TSW17090-D	R08TSW17090-F
	120 FPM 2 @ 1.5	36' - 0"	4' - 6"	15,000	17,600	1,600	R08TSW18054-D	R08TSW18054-F
		48' - 0"	6' - 0"	15,000	17,600	1,800	R08TSW18072-D	R08TSW18072-F
		60' - 0"	7' - 6"	15,000	17,600	2,000	R08TSW18090-D	R08TSW18090-F

All data is furnished for estimating purposes only and is subject to change without notice

(**) SOFT START IS RECOMMENDED FOR SINGLE SPEED APPLICATIONS FOR 165 FPM SPEED CONSULT FACTORY

Complete Part #

Standard control is 460 volt, Nema 12 and includes control transformer, mainline and disconnect (30 amp).

For options see modification section, pages 70 & 71.

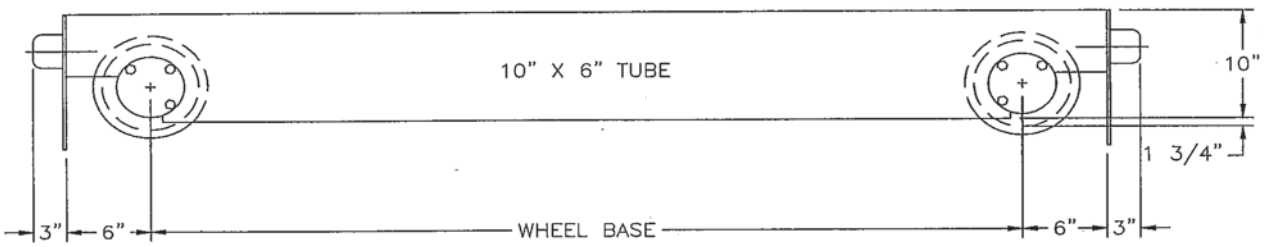

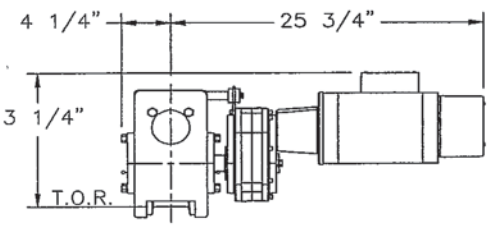

* Actual wheel load must not exceed tabulated wheel load.
* (Tabulated loads are based on CMAA K_{wl} minimums)

ii. Patented Track

SAMPLE PATENTED TRACK CATALOG DATA

[redacted]™ AND [redacted]™ RUNWAYS AND MONORAILS

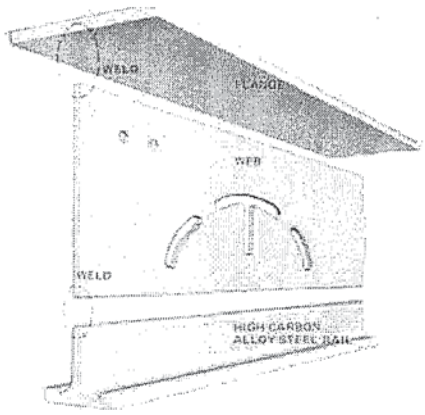

Track Type	[redacted]™		[redacted]™
Track Series	4200 thru 4600 Series	5100 thru 6201 Series	8050 Series and Larger
Rail Width	3-1/4″	3-1/4″	4-1/2″
Rail Tread Thickness	13/32″	5/8″	1″
Maximum Wheel Diameter	5″	7″	9-1/2″
Maximum Load Per Pair of Wheels	4000 lb.	7500 lb.	10,500 lb.
Maximum Equivalent Center Load	See Page 5	See Page 5	See Page 7
General Use	Medium and Heavy-Duty Monorail and Crane Service		Exceptionally Heavy Loads and Heavy-Duty Service
Operating Power	Hand or Electrically Operated		Electrically Operated

Features and Benefits

- **Maximum Strength with Minimum Weight**
  [redacted]™ and [redacted]™ track has been engineered to attain maximum strength with minimum weight, consisting of a compound section of A36 steel flange, web, and specially rolled high carbon steel rail. These parts are welded under carefully controlled conditions to form a combined section, free of stress concentrations. The parts are carefully proportioned to produce a balanced design for loads under varying conditions.
- **Wide Selection**
  [redacted]™ and [redacted]™ track is fabricated in a large number of standard sizes for economical use for the great majority of monorail and crane applications. [redacted]™ track dimensions match with former [redacted]™ Arch Beam dimensions, permitting extension of all systems now in service.
- **Minimal Superstructure Requirement**
  Frequently, ceiling or overhead conditions are such that independent structural work must be erected to provide track supports at short spacings. The balanced design of [redacted]™ and [redacted]™ tracks allows for increased unsupported lengths which reduces the number of required superstructure supports.
- **Ease of Installation**
  Erection of a monorail or crane system using [redacted]™ or [redacted]™ track requires much less time than any other type of track. As all steps of manufacture are under careful control, dimensions are accurate and tracks are uniformly straighter and truer than mill-beam tolerances.

Track Selection Factors

Selection of track for a monorail or underhung crane system is based on a combination of load and span with consideration given to severity of service. The following factors should all be considered when selecting track:

- **Determine the Live Load**
  Determine the maximum shape, size, and weight of the load to be carried. Since experience indicates that loads often increase as time passes, thought should be given to those increases which may occur in the future.
- **Select the Load Carrying Components**
  Select the hoist and carrier because the weight of these components must be added to the live load in determining the capacity required in the track and support system. *Impact allowance should be taken into consideration based on application.*
- **Calculate the Total Load**
  Combine the total live load, the weight of the load carrying components, and the impact allowance.
- **Determine Layout of System**
  Determine the track system layout based on considerations for the flow of material. Other factors to be considered are headroom, clearance over and under obstructions, side clearance, transfer points, and switch locations when required.
- **Suspension Locations**
  Crane runways and monorails are suspended on hanger rods supported by the building superstructure. Thus, spacing of the hanger rods is normally determined by the structural members in the building. The size of the track must be selected to span these distances without exceeding maximum approved deflection and stresses under full moving load conditions.
- **Select the Track and Fittings**
  For safety with maximum economy, choose track whose load capacity just exceeds the maximum load requirement. Select the appropriate support system and fittings after determining the maximum loads at each suspension point.

Identification of component

[redacted]™ TRACK DIMENSIONS AND PHYSICAL PROPERTIES

4200-5660 Series

The table below lists the properties of standard [redacted]™ tracks for general reference.

When [redacted]™ track is used with electrically operated equipment, it can be equipped with necessary electric conductor bars, which are held in position by brackets easily mounted with bolts through holes provided in the web on 10" or larger or clamped to the top flange on the 8" or 8-1/2" size.

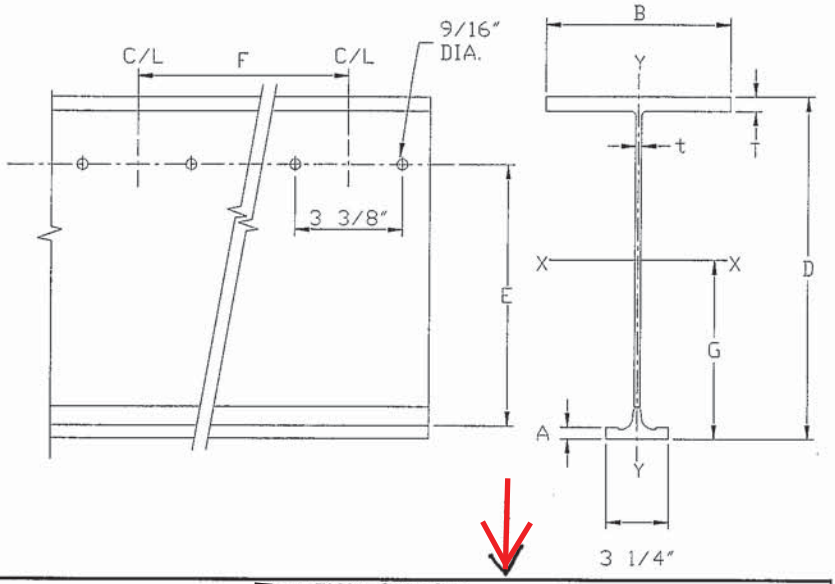

Description	[redacted]™ Track Series										
	4200	4300	4500	4600	5000	5100	5200	5300	5400	5500	5660
Rail Tread Thickness "A" (in.)	0.406	0.406	0.406	0.406	0.625	0.625	0.625	0.625	0.625	0.625	0.625
Flange Width "B" (in.)	4	4.5	6	6.75	6.75	8	8.125	9.625	9.625	11	12.5
Flange Thickness "T" (in.)	0.313	0.438	0.438	0.5	0.5	0.5	0.625	0.625	0.75	0.75	0.75
Web Thickness "t" (in.)	0.25	0.25	0.25	0.25	0.313	0.313	0.313	0.375	0.375	0.375	0.375
Depth of Track "D" (in.)	8	8.5	10	11.75	12.5	12.5	14	16	18	20	24
Tread to Cond. Support Holes "E" (in.)	-	-	7.688	7.688	9.5	9.5	9.5	9.5	9.5	9.5	9.5
C/L to C/L Cond. Support Holes "F" (in.)	-	-	33	33	33	66	66	66	66	66	66
Weight (lb./ft.)	15.1	17.864	21.37	25.355	30.965	33.09	38.217	46.44	52.919	58.98	67.9
Section Area (in.^{2})	4.442	5.254	6.285	7.457	9.107	9.732	11.24	13.658	15.564	17.346	19.971
Center of Gravity "G" (in.)	4.0376	4.809	6.061	7.483	7.21	7.53	8.857	10.319	11.92	13.5	16.327
Moment of Inertia I-xx (in.^{4})	44.47	60.167	97.76	154.54	221.89	236.749	332.258	498.313	696.396	938.746	1524.18
Moment of Inertia I-yy (in.^{4})	2.594	4.25	8.805	13.747	14.312	22.83	29.437	47.972	57.268	84.736	123.636
Section Modulus - Tension (in.^{3})	11.014	12.512	16.128	20.652	30.775	31.4	37.515	48.292	58.423	69.543	93.354
Section Modulus - Compression (in.^{3})	11.223	16.3	24.82	36.215	41.949	47.726	64.599	87.71	114.535	144.396	198.64
Torsion Modulus (in.^{4})	0.116	0.203	0.252	0.375	0.555	0.607	0.949	1.193	1.796	2.024	2.305
Radius of Gyration - xx (in.)	3.209	3.425	3.983	4.591	4.981	4.974	5.477	6.077	6.724	7.391	8.772
Radius of Gyration - yy (in.)	0.775	0.91	1.195	1.369	1.265	1.545	1.63	1.885	1.928	2.221	2.498
Rxx / Ryy	4.14	3.762	3.332	3.353	3.938	3.22	3.36	3.223	3.487	3.328	3.511
Shear Center (in.)	5.171	6.555	8.789	10.748	11.029	11.485	13.021	15.212	17.175	19.284	23.341
Web Area in Shear (in.^{2})	2	2.125	2.5	2.938	3.906	3.906	4.375	6	6.75	7.5	9
Top Flange Area (in.^{2})	1.25	1.969	2.625	3.375	3.375	4	5.078	6.016	7.219	8.25	9.375
Top Flange I-yy (in.^{4})	1.667	3.322	7.875	12.814	12.814	21.383	27.936	46.441	55.729	83.19	122.07
Top Flange Section Modulus (in.^{3})	0.833	1.477	2.625	3.797	3.797	5.333	6.877	9.65	11.58	15.125	19.531
D / (B * T) (in.$^{-1}$)	6.4	4.318	3.81	3.482	3.704	3.125	2.757	2.66	2.494	2.424	2.56

When [redacted]™ tracks are ordered, the cutting operation cuts the upper section back 1/8" maximum from the end of the rail to assure a tight rail joint when a coupling is applied.

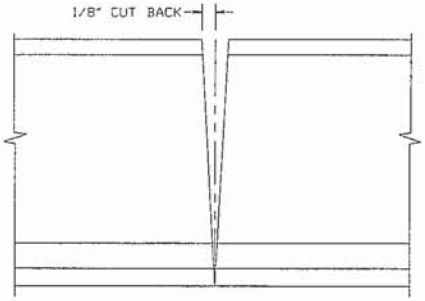

[redacted]™ TRACK SPANS AND EQUIVALENT CENTER LOAD (ECL) CAPACITIES IN LBS.

For Runways and Monorails L/450

	For Carrier Heads with Wheels of 5" Diameter or Less				For Carrier Heads with Wheels of 7" Diameter or Less							
Span	4200 8" @ 15.10 lb./ft.	4300 8-1/2" @ 17.86 lb./ft.	4500 10" @ 21.37 lb./ft.	4600 11-3/4" @ 25.36 lb./ft.	5000 12-1/2" @ 30.97 lb./ft.	5100 12-1/2" @ 33.09 lb./ft.	5200 14" @ 38.22 lb./ft.	5300 16" @ 46.44 lb./ft.	5400 18" @ 52.92 lb./ft.	5500 20" @ 58.98 lb./ft.	5660 24" @ 67.90 lb./ft.	Span
5′	14926 C	20808 T	26826 T	34357 T								5′
6′	12425 C	17324 T	22335 T	28608 T								6′
7′	10636 C	14832 T	19125 T	24497 T								7′
8′	9073 C	12962 T	16714 T	21411 T								8′
9′	7149 C	11505 T	14837 T	19008 T								9′
10′	5770 C	10337 T	13333 T	17083 T	25491 T							10′
11′	4748 C	9380 T	12100 T	15506 T	23144 T							11′
12′	3969 C	8582 T	11072 T	14190 T	21186 T	21608 T	25823 T					12′
13′	3361 C	7331 C	10199 T	13074 T	19526 T	19914 T	23800 T					13′
14′	2877 C	6296 C	9450 T	12115 T	18102 T	18460 T	22063 T					14′
15′	2485 C	5459 C	8800 T	11283 T	16547 C	17197 T	20555 T					15′
16′	2163 C	4773 C	7989 D	10554 T	14500 C	16090 T	19233 T					16′
17′	1894 C	4203 C	7039 D	9908 T	12801 C	15112 T	18065 T					17′
18′	1668 C	3723 C	6241 D	9333 T	11374 C	14240 T	17024 T	21940 T	26572 T			18′
19′	1476 C	3316 C	5563 D	8817 T	10164 C	13458 T	16091 T	20740 T	25122 T			19′
20′	1310 C	2968 C	4983 D	7982 D	9129 C	12301 D	15249 T	19657 T	23814 T	28387 T		20′
21′		2666 C	4481 D	7195 D	8236 C	11098 D	14486 T	18676 T	22628 T	26977 T		21′
22′		2404 C	4045 D	6510 D	7460 C	10053 D	13790 T	17782 T	21548 T	25693 T		22′
23′			3662 D	5911 D	6781 C	9138 D	12943 D	16963 T	20559 T	24519 T		23′
24′			3325 D	5383 D	6183 C	8333 D	11818 D	16211 T	19651 T	23439 T		24′
25′			3026 D	4915 D	5654 C	7620 D	10823 D	15517 T	18813 T	22444 T	30269 T	25′
26′			2759 D	4499 D	5182 C	6986 D	9937 D	14875 T	18038 T	21523 T	29038 T	26′
27′			2520 D	4126 D	4761 C	6418 D	9146 D	13900 D	17318 T	20668 T	27896 T	27′
28′			2305 D	3791 D	4382 C	5908 D	8435 D	12841 D	16647 T	19872 T	26833 T	28′
29′			2110 D	3488 D	4040 C	5447 D	7794 D	11887 D	16021 T	19128 T	25841 T	29′
30′			1933 D	3213 D	3730 C	5030 D	7214 D	11023 D	15435 T	18433 T	24913 T	30′
31′				2963 D	3449 C	4651 D	6687 D	10239 D	14541 D	17780 T	24043 T	31′
32′				2735 D	3191 C	4305 D	6206 D	9525 D	13551 D	17167 T	23224 T	32′
33′				2525 D	2956 C	3988 D	5766 D	8872 D	12646 D	16588 T	22454 T	33′
34′				2333 D	2740 C	3696 D	5362 D	8273 D	11816 D	16042 T	21220 C	34′
35′						3428 D	4990 D	7723 D	11054 D	15172 D	19926 C	35′
36′						3180 D	4647 D	7215 D	10352 D	14233 D	18735 C	36′
37′						2950 D	4330 D	6745 D	9704 D	13366 D	17637 C	37′
38′						2736 D	4035 D	6310 D	9103 D	12564 D	16622 C	38′
39′						2537 D	3761 D	5906 D	8545 D	11821 D	15681 C	39′
40′						2351 D	3505 D	5529 D	8027 D	11129 D	14807 C	40′
41′								5178 D	7543 D	10485 D	13994 C	41′
42′								4849 D	7091 D	9884 D	13237 C	42′
43′								4541 D	6668 D	9321 D	12529 C	43′
44′								4252 D	6272 D	8794 D	11866 C	44′
45′								3980 D	5899 D	8300 D	11245 C	45′
46′								3724 D	5548 D	7835 D	10662 C	46′
47′								3469 D	5200 D	7372 D	10113 C	47′
48′								3144 D	4753 D	6778 D	9596 C	48′
49′										6229 D	9109 C	49′
50′										5719 D	8648 C	50′
51′										5246 D	8213 C	51′
52′										4806 D	7800 C	52′
53′										4396 D	7408 C	53′
54′										4013 D	7037 C	54′
55′										3654 D	6683 C	55′
56′											6346 C	56′

- In the use of this table it is important to note that **T**ension of the rail, **C**ompression of the top flange, and **D**eflection of the beam contribute to the load limitations and are indicated by the letters T, C, and D respectively following the listed ECL.
- For runways and monorail systems, the deflection limit is 1/450 span with 1-1/4" maximum deflection limit for spans beyond 46′. The maximum ratio of span to top flange width does not exceed 60. The weight of the beam has been allowed for and need not be considered in any calculations.
- For maximum allowable load per head: For [redacted]™ beams with square cut ends refer to Carriers & Idlers Section pages 12 to 14. For [redacted]™ beams with angular cut ends and switches refer to Switches & Curves Section pages 1 and 2.

[redacted]™ AND [redacted]™ WEB COUPLING

Beam web couplings are used in conjunction with top flange splice plates, where two beams are joined together. Web couplings hold beams in proper alignment at suspension points. They are also used when [redacted]™ track is coupled to existing beams when extensions are made. Welded components are standard. Bolted couplings are available as an alternative.

Welded Web Coupling
Part Number: 1-32093-000

Tarca™ Track Series		Net Wt.
4200 through 5660	8050 through 8200	1.5 lb.

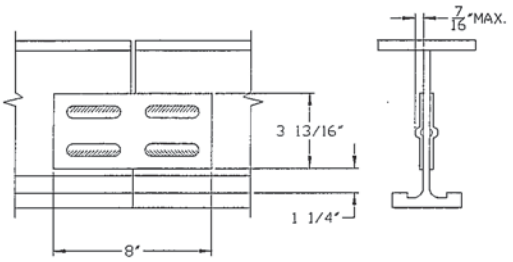

Features:
- Made of heavy steel stampings.
- Two web plates required on 4200 through 4600 [redacted]™.
- Four web plates required on 5000 through 5660 [redacted]™ and 8050 through 8200 [redacted]™.
- Holds beams in alignment.
- Part number is one plate only.
- Top flange splice plate required, see page 9.

Finish:
- Plain steel to be painted in the field after welding.

Bolted Web Coupling for [redacted]™ Series 4200 through 4600
Part Number: 2-02507-100

[redacted]™ Track Series	Net Wt.
4200 through 4600	4.5 lb.

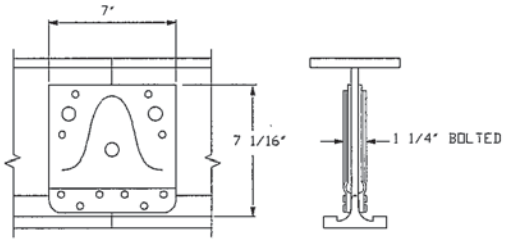

Features:
- Made of two heavy steel stampings.
- Holds beams in alignment.
- Includes required hardware.
- Top flange splice plate required, see page 9.

Finish:
- Painted gray-green.

Coupling for specified track

Bolted Web Coupling for [redacted]™ Series 5000 through 5660
Part Number: 3K-10008-15

[redacted]™ Track Series	Net Wt.
5000 through 5660	15.3 lb.

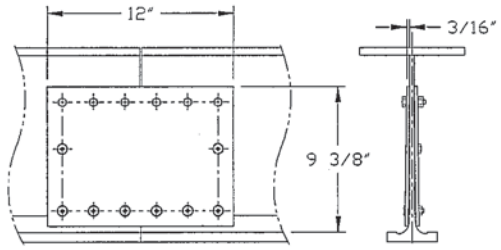

Features:
- Made of two heavy steel stampings.
- Holds beam in alignment.
- Includes required hardware.
- Top flange splice plate required, see page 9.

Finish:
- Painted gray-green.

L. Structural Calculations

Please see the following pages for structural calculations.

Girder Design

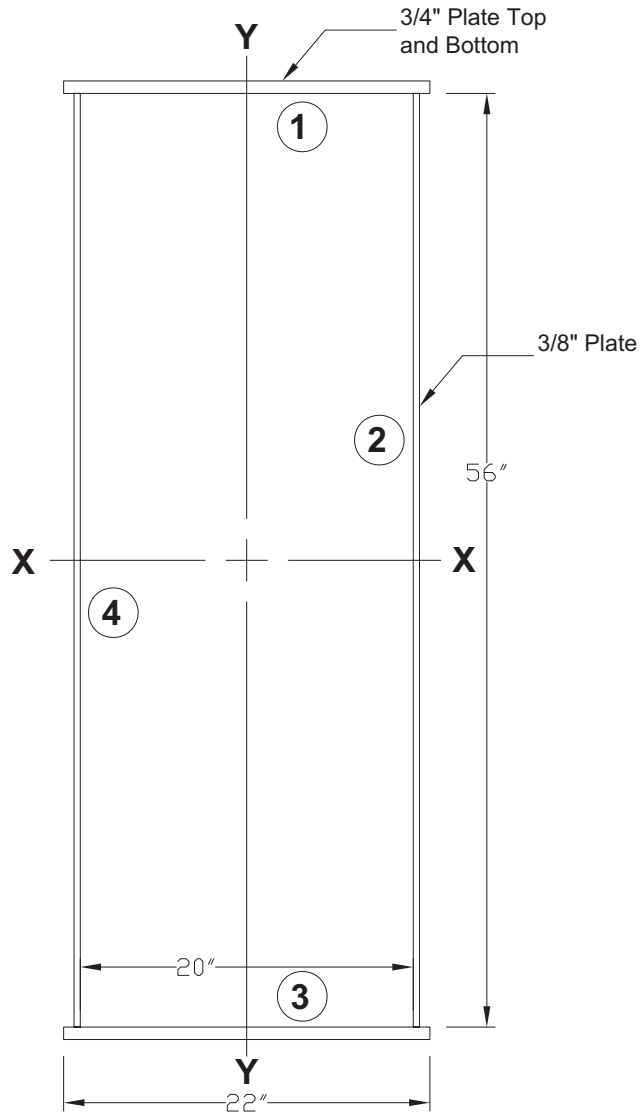

General Calculations

Performance Specifications

Capacity: 60 ton main hoist, indoor
Span: 72 feet
Bridge speed: 180 fpm
Trolley speed: 100 fpm
Main hoist speed: 25 fpm
A36 steel = 0.28 lb/in³

Properties of Proposed Design

- Cab (B):
  - Weight = 1.8k
  - y = 1.5' off C.L. girder
  - vertical C.G = 6.83' below girder neutral axis at center span
- Drive Machinery (C):
  - Weight = 15 lb/ft
  - y = 2' off C.L. girder
- Walkway:
  - Weight = 30 lb/ft
  - y =2.5' off C.L. girder
- Trolley (A):
  - Weight = 34k
  - wheel base = 12'
  - C.G. 4.33' above N.A. of girder
- Bridge Drive :
  - 7.5 H.P.
  - 1200 rpm
  - reduction = 12:l (motor to shaft)
  - Deceleration rate: 0.55 ft / sec^2
  - Truck weight: 2,850 lbs

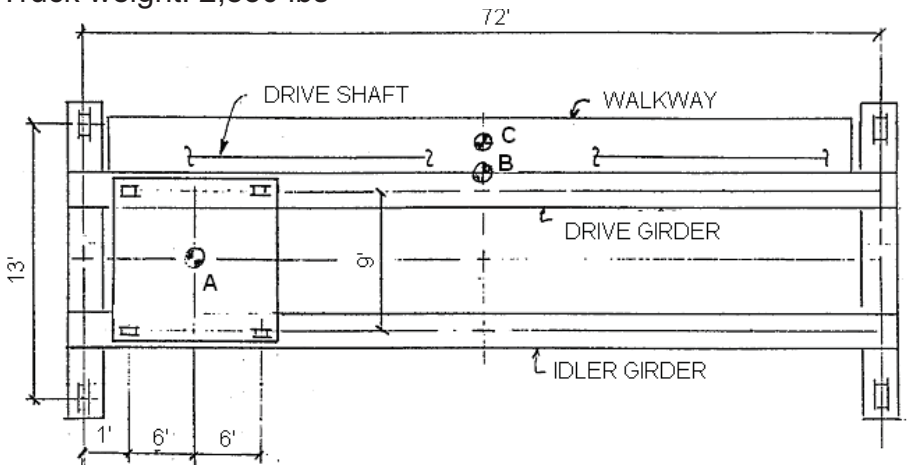

Section Properties of Proposed Design

A=bh
A_1, A_3 = (22)(0.75) = 16.5 in^2
A_2, A_4 = (0.375)(56) = 21 in^2
A_{total} = 75 in^2

d = distance from center to center of object
d_{1x}, d_{3x} = 0 in^2
d_{1y}, d_{3y} = (56/2) + (0.75/2) = 28.375 in^2
d_{2x}, d_{4x} = (20/2) + (0.375/2) = 10.189 in^2
d_{2y}, d_{4y} = 0 in^2

$I = bh^3/12$ (for rectangular area)
I_{1x}, I_{3x} = $(0.375)(56)^3/12$ = 5488 in^4
I_{1y}, I_{3y} = $(56)(.375)^3/12$ = 0.246 in^4
I_{2x}, I_{4x} = $22(0.75)^3/12$ = 0.77 in^4
I_{2y}, I_{4y} = $0.75(22)^3/12$ = 665.5 in^4

$I_x = I_{1x} + I_{2x} + I_{3x} + I_{4x} + A_1d_{1y}^2 + A_2d_{2y}^2 + A_3d_{3y}^2 + A_4d_{4y}^2$
$= 5488 + 0.77 + 5488 + 0.77 + 16.5(28.375)^2 + 21(0)^2 + 16.5(28.375)^2 + 21(0)^2$
$= 37547\ in^4$
$I_y = I_{1y} + I_{2y} + I_{3y} + I_{4y} + A_1d_{1x}^2 + A_2d_{2x}^2 + A_3d_{3x}^2 + A_4d_{4x}^2$
$= 0.246 + 665.5 + 0.246 + 665.5 + 16.5(0)^2 + 21(10.189)^2 + 16.5(0)^2 + 21(10.189)^2$
$= 5691\ in^4$

Distance from origin to centroid
x = (56/2) + 0.75 = 28.75
y = (22/2) = 11

$Sx = I_x/x$ = 37547/28.75 = 13051 in^3
$Sy = I_y/y$ = 5691/11 = 517 in^3

Calculation of Load Cases

Load Multipliers

Hoist Load Factor (HLF) (*CMAA #70, 3.3.2.1.4.2*)
HLF = 0.15 ≤ 0.005 x Hoist Speed (fpm) ≤ 0.5
HFL = 0.005 x 25 = 0.125
HLF = 0.125

Reference to required standard

Dead Load Factor – Box Girders (DLF_B) (*CMAA #70, 3.3.2.1.4.1*)
DLF_B = 1.1 ≤ 1.05 + [Travel Speed (fpm)/2000] ≤ 1.2
DLF_B = 1.05 + 180/2000 = 1.14
DLF_B = 1.14

Dead Load Factor – Trolley (DLF_T) (*CMAA #70, 3.3.2.1.4.1*)
DLF_T = 1.1 ≤ 1.05 + [Travel Speed (fpm)/2000] ≤ 1.2
DLF_T = 1.05 + 100/2000 = 1.1
DLF_T = 1.1

Test Factor (TF)
Test load is 131.25% of the rated live load.
TF= 1.3125

Loads

Concentrated Loads
Trolley Dead load = 34 k @ A
Trolley live load = 120 k @ A
Cab dead load = 1.8 k @ B
Drive machinery dead load = 2.0 k @ C

Distributed Loads
Girder = w_{beam}*L + 20% for rail diaphragm & stiffeners
= (75 in^2 x 0.283 lb/in³)(72'x12")[1+0.2] = 22.01 k
Walkway = $w_{walkway}$*L = 30 lb/ft x 72' = 2.16 k

Drive shaft = w_{drive}*L = 15 lb/ft x 72' = 1.08 k

Bridge Unit load = (w_{beam}+20% for rail diaphragm & stiffeners)+ $w_{walkway}$+ w_{drive}
= (75 in^2 x 0.283 lb/in³)(12")[1+0.2] + 30 + 15 = 0.35 K/ft

Principal Loads (CMAA #70 3.3.2.1)
DL = Dead Load (bridge)
= cab + drive machinery + girder + walkway + drive shaft
= 1.80 k + 2.00 k + 22.01 K + 2.16 k + 1.08 k

= 29.05 k
= 14.525 k/bridge

TL = Trolley Load **= 34 k**
= 17 k/bridge

LL = Lifted Load **= 120 k**
= 60 k/bridge

IFD = Inertia Forces from Drives (CMAA #70, 3.3.2.1.5)
$= 0.025(LL) \leq (7.8(LL)a_{DECELERATION})/g = [7.8(LL)(V_f-V_i)]/g\Delta t$
$= 0.025(120) \leq 7.8(120)(25-0)/(32)(3)(60\ s/min)$
$= 3k \leq 4.1k$
Therefore, **IFD = 3 k**

Where,
V_f = final velocity = 0
V_i = initial velocity = 25 fpm
Δt = time to stop = ~ 3 seconds
g = gravity (32 ft/sec^2)

Additional Loads (CMAA #70 3.3.2.2)

WLO = Operating wind load = 0

SK = Forces due to skewing (*CMAA#70, 3.3.2.2.2)*
= Ssk (Wheel Load)
= 0.12 x 103.4 k
=**12.41 k**
Where, the skewing factor, Ssk, =

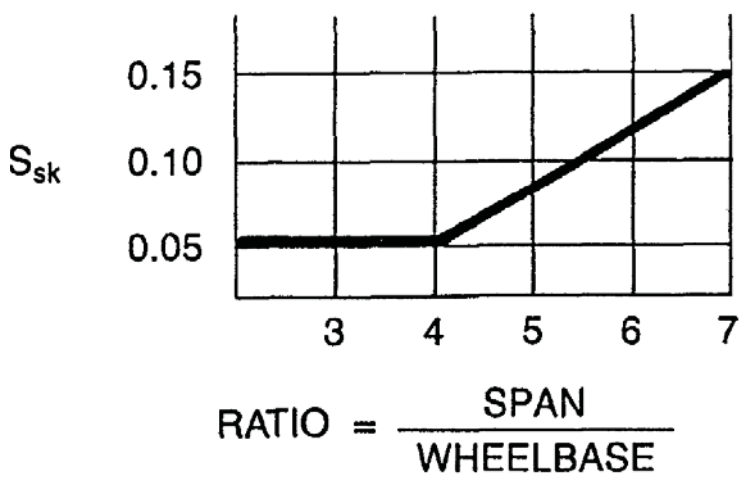

Ratio = Bridge Span / Truck Wheelbase
Ratio = 72' / 12'= 6
Therefore, **Ssk = 0.12**

To determine the maximum wheel load for skewing force, the following load diagram is used.

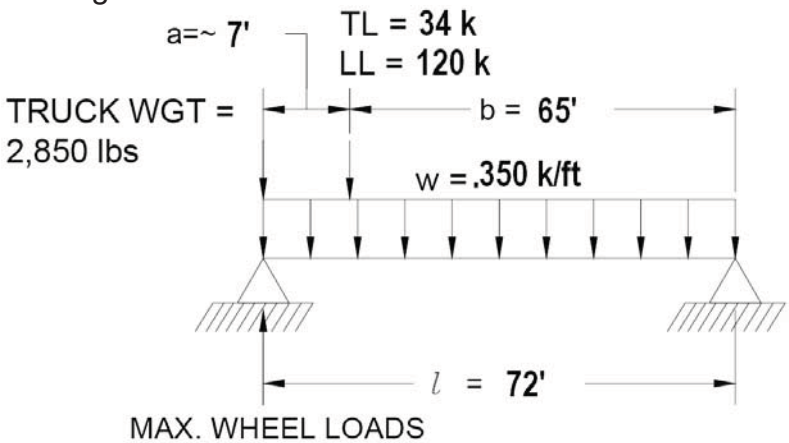

A reasonable 1st order approximation of the maximum bridge wheel load by modeling the loads as concentrated and distributed loads on a simply supported beam and using the principle of superposition. From *AISC Steel Construction Manual, 13th Edition, Table 3-23, Cases 1 & 8 (Simple Beam – Uniformly Distributed Load; Simple Beam – Concentrated Load at any Point)*.

Bridge Wheel Load = $[(TF)(LL)+(DLF_T)(TL)](b)/l + 2[DLF_B (w)(l)/2] + DLF_T$ (TRUCK)

Bridge Wheel Load = [(1.313)(120)+(1.1)(34)] (65)/72 + 1.1(.350)(72) + 1.1(2.850)

= 206.8 k.

No. of wheels per truck = 2

Wheel Load = Wheel Loads/2 = 103.4 k

Load Combinations

Case #1 [Crane in regular use under principal loading (Stress Level 1)]

Equivalent Load Bridge = DL (DLF_B) + TL (DLF_T) + LL (1 + HLF) + IFD

= 14.525(1.14) + 17(1.1) + 60(1+0.125) + 3

EL Bridge = 105.76 k/bridge

Case #2 [Crane in regular use under principal and additional loading (Stress Level 2)]

Equivalent Load Bridge = DL (DLF_B) + TL (DLF_T) + LL (1 + HLF) + IFD + WLO +SK

= 14.525(1.14) + 17(1.1) + 60(1+0.125) + 3 + 0 + 12.41

EL Bridge = 118.17 k/bridge

Case #3 [Test Load (Stress Level 3)]

Equivalent Load Bridge = DL (DLB) + TL (DLFT) + LL(TF)(1 + HLF) + IFD

= 14.525(1.14) + 17(1.1) + 60(1.313)(1+0.125) + 3

EL Bridge = 126.89 k/bridge

Bending Stress

Determine the maximum bending stress in the Box Girder by modeling the box girder as a simply supported beam with a single load at mid-span. From *AISC Steel Construction Manual, 13th Edition, Table 3-23, Case 7 (Simple Beam – Concentrated Load at Center).*

$$M_{\max} = \frac{Pl}{4}$$

L = 864”
P = EL Bridge

$$\sigma_{\max} = \frac{M_{\max} c}{I}$$

C = depth/2 = 56”/2 = 28”
I = I_x = 37550 in^4

Case 1

$$M_{\max} case1 = \frac{105760(864)}{4} = 22844160 lb - in$$

$$\sigma_{\max} = \frac{22844160(28)}{37550} = 17034 psi$$

Calculated value

Allowable Stress Case 1 = $0.6\sigma_{yp}$ = 21,600 psi (CMAA# 70 3.4.1)

Allowable value

17034.26 < 21,600 **BENDING STRESS OK**

Statement for design meeting criteria

Case 2

$$M_{\max} case2 = \frac{118170(864)}{4} = 25524720 lb - in$$

$$\sigma_{\max} = \frac{25524720(28)}{37550} = 19033.1 psi$$

Allowable Stress Case 2 = $0.66\sigma_{yp}$ = 23,760 psi (CMAA# 70 3.4.2)
19033.1 < 23760 **BENDING STRESS OK**

Case 3

$$M_{\max} case3 = \frac{126890(864)}{4} = 27408240 lb - in$$

$$\sigma_{\max} = \frac{27408240(28)}{37550} = 20437 psi$$

Allowable Stress Case 2 = $0.75\sigma_{yp}$ = 27,000 psi (CMAA# 70 3.4.3)
20437 < 27000 **BENDING STRESS OK**

Buckling (CMAA # 70 3.4.8)

$\sigma_k = K_\sigma \sigma_e$

$\tau_k = K_\tau \sigma_e$

Where,

K_σ = buckling coefficient compression

K_τ = buckling coefficient shear

CMAA # 70 Table 3.4.8.2.1

Case	Loading		Buckling Stress	Range of Application	Buckling Coefficient
1	Compressive stresses, varying as a straight line. $0 \le \Psi \le 1$	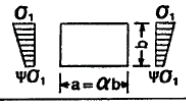	$\sigma_k = K_\sigma \sigma_e$	$\alpha \geq 1$ $\alpha < 1$	$K_\sigma = \frac{8.4}{\Psi + 1.1}$ $K_\sigma = \left[\alpha + \frac{1}{\alpha}\right]^2 (x) \left[\frac{2.1}{\Psi + 1.1}\right]$
2	Compressive and tensile stresses; varying as a straight line and with the compression predominating. $-1 < \Psi < 0$	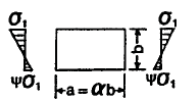	$\sigma_k = K_\sigma \sigma_e$		$K_\sigma = [(1 + \Psi)K'] - (\Psi K'') + [10\Psi(1 + \Psi)]$ wherein K′ is the buckling coefficient for $\Psi = 0$ (case 1) and K″ is the buckling coefficient for $\Psi = -1$ (case 3).
3	Compressive and tensile stresses, varying as a straight line, with equal edge values, $\Psi = -1$ or with predominantly tensile stresses, $^*\Psi < -1$	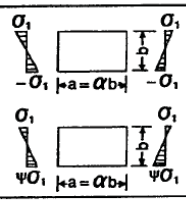	$\sigma_k = K_\sigma \sigma_e$	$\alpha \geq 2/3$ $\alpha < 2/3$	$K_\sigma = 23.9$ $K_\sigma = 15.87 + \frac{1.87}{\alpha^2} + 8.6\alpha^2$
4	Uniformly distributed shear stresses.	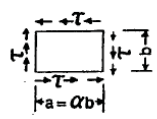	$\tau_k = K_\tau \sigma_e$	$\alpha \geq 1$ $\alpha < 1$	$K_\tau = 5.34 + \frac{4.00}{\alpha^2}$ $K_\tau = 4.00 + \frac{5.34}{\alpha^2}$

*For the calculation of α and σ_e in case 3 with predominant tension, replace dimension b by 2 × the width of the compression zone. But use actual b dimension to determine α and σ_e for the simultaneously acting shear stress portion.

α = a/b

Side plates:

Since the proposed cross section of the box girder is symmetrical on both axis, we can assume that tensile and compressive stress are equal on the top and bottom sides of the girder. Case 3 from Table 3.4.8.2.1

a = depth of the girder side plate = 24”

b = center-to-center distance between diaphragms = 20”

α = 24/20 = 1.2 > 2/3 therefore K_σ = 23.9

$$\sigma_e = [26.21x10^6]\left[\frac{t}{b}\right]^2 = [26.21x10^6]\left[\frac{0.375}{56}\right]^2 = 1.175ksi$$

t = thickness of plate = 0.375 in

b = width of plate perpendicular to the compression force = 56 in

$\sigma_k = K_\sigma \sigma_e$ = 23.9(1.175) = 28.1 ksi

$\sigma_k >> \sigma_e$ **side plates adequate for design**

Location and Size of Diaphragms and Stiffeners

Diaphragms and Vertical Stiffeners (CMAA# 70 3.5.4)
Spacing of Vertical web stiffners (CMAA# 70 3.5.4.1)

$a = \frac{350t}{\sqrt{\tau_v}}$ ≤ 72" or depth of the web (56") whichever is greater

Where,

a = longitudinal distance between diaphragms or transverse stiffeners (in)
t = Thickness of the web = 0.375"
τ_v = Shear stress in web plates = 1.5V/A
V = Shear load = (1+ HLF)(TF)LL
A = cross section area of web = dt

V = (1 + 0.125)(1.3125)(120) = 177 k
A = .375(56) = 21 in^2
τ_v = 1.5(177)/21 = 12.64 ksi

$a = \frac{350(.375)}{\sqrt{12.64}} =$ 36.9 in <72 <56

Short Diaphragm Spacing (CMAA #70 3.5.4.6)

$$\frac{TWL(d_{\max})}{6(S_{rail})} \leq Maxstress$$

Where,
TWL = Trolley Wheel Load = 103.4 K (See Skewing Force Calculation)
d_{max} = Diaphragm spacing
S_{Rail} = Section Modulus 60# Rail = I/c = 7.122 in3
Maxstress = 18 ksi case 1
= 19.8 ksi case 2
= 22.5 ksi case 3

Rearranging the equation and solving for dmax,

Case 1

$$\frac{18ksi(6)(7.122in^3)}{103.4k} \geq d\max = 7.44in$$

Case 2

$$\frac{19.8ksi(6)(7.122in^3)}{103.4k} \geq d\max = 8.18in$$

Case 3

$$\frac{22.5ksi(6)(7.122in^3)}{103.4k} \geq d\max = 9.30in$$

d_{max} = 9.30 in

Minimum Thickness of Diaphragms (CMAA # 70 3.5.4.5)
To determine the minimum thickness of the diaphragms, we can calculate the bearing pressure and match it to the allowable stress of the material.

$$\frac{TWL}{B_w(d_t)} \leq \sigma_{allowable}$$

Where,
TWL = Trolley Wheel Load = 103.4 K (See Skewing Force Calculation)
B_w = Bearing Width = ASCE 60# rail base = 4.25” + 2” = 6.25”
$\sigma_{Allowable}$ = Bearing stress =.75σ = (0.75)(36ksi) = 27 ksi

d_t = (103.4)/(6.25)(27)
= 0.61 in

Box Girder Camber (CMAA # 70 3.5.5.2)

Camber = $\Delta_{max\ DL} + \Delta_{max\ 50\%\ LL}$

From AISC Steel Construction Manual, 13th Edition, Table 3-23, Cases 1 & 7 (Simple Beam – Uniformly Distributed Load; Simple Beam – Concentrated Load at Center).

$$Camber = \frac{5wl^4}{384EI} + \frac{0.5Pl^3}{48EI}$$

$$Camber = \frac{5(\frac{0.35}{12})864^4}{384(29{,}000)(37550)} + \frac{0.5(126.89)(864)^3}{48(29000)(37550)} = 0.97in$$

Where,
l = Bridge Span = 864”
P = EL Bridge case 3 (highest) = 126.890 k
w = Bridge Unit Load = 0.35 k/ft
E = Young’s Modulus = 29,000 ksi
I = Moment of Inertia = 37550 in^4

Statement of variables

Live Load Deflection (CMAA # 70 3.5.5.1)

Δ_{max} = span/888
= 72’(12”)/888 = 0.972”

Δ = $PL^3/48EI$
= $(77)(864)^3/48(29000)(37550)$
=0.950

P = (LL + TL)/2 = (120k + 34k)/2 = 77k
I = I_x = 37550 in^4
E = 29,000 ksi

0.950 < 0.972 **DEFLECTION OK**

Design Limitations Guideline for Proportions of Welded Box Girders
(*CMAA #70, 3.5.1)*

L/h < 25
Span/depth of girder < 25
72'(12")/56" = 15.4 < 25 **SECTION OK**

L/h < 65

Span/ distance between webplates < 65
72'(12")/20" = 43.2 < 65 **SECTION OK**

Bridge End Truck
Wheel base of end truck > span/7 (CMAA # 70 3.6.1)
13' > 72'/7 = 10.28 **WHEEL BASE OK**

M. Mechanical Calculations

Please see the following pages for mechanical calculations.

i. Non-commercial items

1. Drums

Fleet Angle Calculation

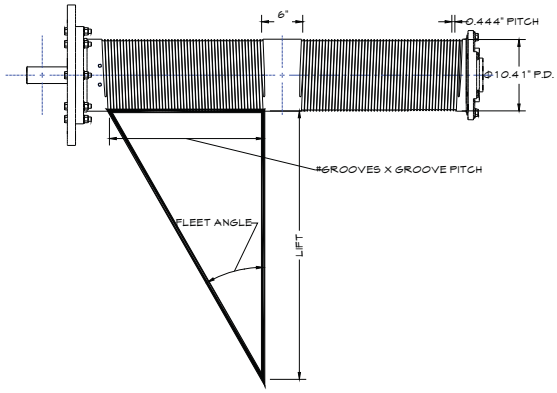

$$\text{Fleet Angle} = \arctan\left[\frac{\#\text{Grooves}(\text{Groove Pitch})}{\text{Lift}}\right] = \arctan\left[\frac{52(0.444)}{64(12)}\right] = \underline{\mathbf{1.722°}}$$

From *CMAA #70, 4.4.3.1*, the maximum allowed fleet angle is 4°.

The stress analysis of the drum weldment will be done in several sections.

1. Radial forces against the drum shell.
2. Determination of the drum shell thickness.
3. Determination of the end plate thickness and stresses.

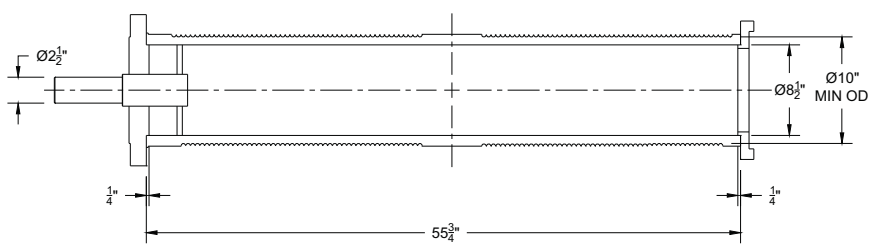

Radial Force Against the Drum

In this analysis, we are using the analysis approach from *Design of Weldments* by Omar Blodgett where the turns of the wire rope are treated as a shell. The tensile force in the wire rope (F), creates a uniform inward radial force (p) against the drum shell about which it is wound.

$$F = \frac{(1+\text{HLF})(\text{TF})(\text{LL}) + \text{LB}}{n} = 3811 \text{ lbs}$$

Where	F	=	Tensile force in wire rope		
	LL	=	Design Capacity	=	10000 lbs
	n	=	Number of parts of rope	=	4
	HLF	=	Hoist Load Factor	=	0.15
	TF	=	Test Factor	=	1.3125
	LB	=	Load Block	=	150 lbs (est.)

$$P = \frac{F}{R_M B} = 1717 \text{ psi}$$

Where	P	=	Uniform internal radial pressure		
	R_M	=	Mean radius of the wire rope on the drum shell	=	5”
	B	=	Width of drum per turn = groove pitch	=	0.444”

Consider the drum shell as long open ended tube with no allowances for the stiffening effects of the end plates. For steel, the critical buckling pressure for the drum shell is

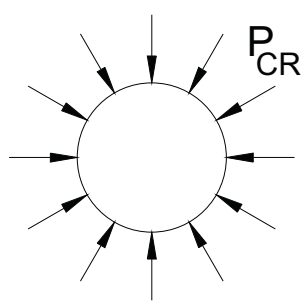

$$P_{CR} = \frac{Et^3}{4(1-\nu^2)R^3} = 34615 \text{ psi}$$

Where	P_{CR}	=	Critical buckling pressure pressure		
	R	=	Mean radius of the shell	=	4.63”
	ν	=	Poisson’s Ratio for steel	=	.292
	E	=	Young’s Modulus for steel	=	3×10^7 psi
	t	=	Tube wall thickness	=	0.75”

Since, $P << P_{CR}$, the possibility of the drum shell collapsing under pressure is minimal.

We can also analyze the drum shell in bending as a simply supported beam with a single load at mid-span. From *AISC Steel Construction Manual, 13th Edition, Table 3-23, Case 7 (Simple Beam – Concentrated Load at Center).* This would be equivalent to a load that has been raised to the maximum height with both wire ropes approximately at the center of the drum.

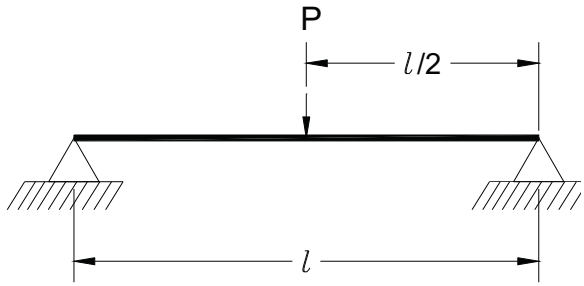

$$M_{MAX} = \frac{Pl}{4} = \frac{0.5[(1+HLF)(TF)LL + LB]l}{4} = 107275 \text{ in-lbs}$$

Where	LL	=	Design Capacity	=	10000 lbs
	l	=	Drum shell length	=	55.75”
	HLF	=	Hoist Load Factor	=	0.15
	TF	=	Test Factor	=	1.3125
	LB	=	Load Block	=	150 lbs (est.)

$$\sigma_{MAX} = \frac{(M_{MAX})\,c}{I} = \mathbf{2036\ psi}$$

Where	c	=	Drum shell radius	=	5”.
	I_B	=	Moment of inertia	=	263.5 in^4

To determine the stress in the trunnion shaft and end plate, we will use a plate formula from Roark’s *Formulas for Stress and Strain* (Table 24, case 21, 5th Edition) for a fixed round flat plate with a central couple load located at the center.

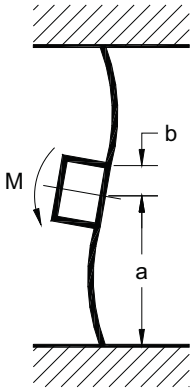

$$\sigma_B = \frac{\beta M}{bt^2} = \underline{\mathbf{2985\ psi}}$$

Where	σ_B	=	Stress at the shaft to plate joint		
	M	=	Moment load	=	107275 in-lbs
	β	=	Tabulated value for b/a = .706	=	0.467”
	b	=	Shaft radius	=	1.5”
	a	=	Drum inside radius	=	4.25”
	t	=	End plate thickness	=	2”

$$\sigma_A = \frac{\beta R_O M}{a^2 t^2} = \underline{\mathbf{2947\ psi}}$$

Where	σ_A	=	Stress at the drum shell to plate joint		
	M	=	Moment load	=	107275 in-lbs
	β	=	Tabulated value for b/a	=	0.467”
	R_O	=	Drum inside radius	=	4.25”
	a	=	Drum inside radius	=	4.25”
	t	=	End plate thickness	=	2”

σ_A should be the same for each end plate. There should not be any drum shell to end plate stresses for the end plate that houses the barrel coupling.

Each end plate has a ¼” raised step that is inserted inside the drum shell. The purpose of the raised step is primarily for locating the endplates during assembly. The shear and bearing stress on the raised step are,

$$\tau_{AVG} = \frac{4V}{3A_S} = \frac{4[0.5[(1+HLF)(TF)LL] + LB]}{3A_S} = 100 \text{ psi}$$

$$\sigma_{BEARING} = \frac{0.5[(1+HLF)(TF)LL + LB]}{dt} = \underline{\mathbf{3552\ psi}}$$

Where	LL	=	Design Capacity	=	10000 lbs
	HLF	=	Hoist Load Factor	=	0.15
	TF	=	Test Factor	=	1.3125
	LB	=	Load Block	=	150 lbs (est.)
	A_S	=	Shear area = $\pi d^2/4$	=	53.5 in^2
	t	=	Raised step thickness	=	0.25”
	d	=	Drum shell ID	=	8.5”

2. Bearings

Title		Sheet No. of
Bridge Wheel Bearing		1 of 1
By BRS / /	Chk. / /	Job No. 09-5030

Bridge Endtruck Wheel Bearing

- MWL = 16,579 lbs
- Min W.L. = 5011 lbs
- BW = 20,462 lbs
- TW = 3042 lbs
- LL = 20,000 lbs
- X = 554"
- Span = 580"
- f = X/span = .96
- Bearing = SB 22216
- Dynamic Rating = 39,600 lbf
- Wheel RPM = 21

$$kw = \frac{(.75)(20462) + (.96)(20000) + (.5)(3042) - (.5)(.96)(3042)}{(.75)(20462) + (1.5)(.96)(20000)} = .78$$

Effective Load = 16,579 • .78 = 12,932 lbs / 2 bearings
= 6,466 lbs

$$L_{10} = \frac{1000000}{60 \cdot 21\ RPM} \cdot \left(\frac{39600}{6466}\right)^{10/3} = 333,550 \text{ hours}$$

Class C req = 5,000 hours ok

Title		Sheet No. of
Trolley Wheel Bearing		1 of 1
By BRS / /	Chk. / /	Job No. 09-5030

Trolley Wheel Bearing

- UCF211-35
- Dynamic Rating = 9,757 lbs
- Wheel RPM = 31,067
- Max Load = ½ · M.W.L. = ½ · 7027 = 3,514 lbs
- Min Load = ½ · Min W.L = ½ · 923 = 462 lbs
- Trolley Weight = 3,042 lbs

$$K_{wtw} = \frac{(2)(26")(20000)/(52) + (1.5)(3042)}{(3)(26")(20,000)/(52) + (1.5)(3042)} = .71$$

Effective Load = 3514 · .71 = 2495 lbs

$$L_{10} = \frac{(1)(16,700)}{31,067\ RPM} \cdot \left(\frac{9757}{2495}\right)^3 = 32,148 \text{ hours}$$

Class C req = 5000 hours ok

Title		Sheet No. of
Drum Pillow Block		1 of 1
By BRS / /	Chk. / /	Job No. 09-5030

Drum Pillow Block

- SUCSP 210-31
  - SUC 210-31 Bearing Insert
  - SP210 Housing (stainless Steel)
  - Dynamic Rating = 7,895 lbf
- Drum RPM = 16.34

- Drum Tail End Reaction = 5,400 lbs = max Load
- ½ Drum W + (Block + Rope) / 4 = min Load
  $= \frac{1}{2}(509) + (315 + 62)/4 = 349$ lbs = min Load

$$k_w = \frac{(2)(5{,}400) + (349)}{(3)(5{,}400)} = .69$$

Effective Load = 5400 · .69 = 3,726 lbs

$$L_{10} = \frac{(1)(16{,}700)}{(16.34\,RPM)} \cdot \left(\frac{7895}{3726}\right)^3 = 9{,}723 \text{ hours}$$

Class C Req = 5000 hours ok ✓

Title		Sheet No. of
Block Bearings		1 of 1
By BRS / /	Chk. / /	Job No. 09-5030

Block Sheave Bearing

MR56 - MI48

- Dynamic Rating = 35,900 lbf

Dynamic Rope Load = 5145 ⇒ Max Load = 10,290 lbs

Block Weight = 315 lbs ⇒ 315/4 parts = 79 lbs ⇒ Min Load = 158 lbs

Drum RPM = 16.34

$$kw = \frac{(2)(10{,}290) + (158)}{(3)(10{,}290)} = .67$$

Effective Load = 10,290 · .67 = 6894 lbs

$$L_{10} = \frac{16{,}666}{16.34\ RPM} \cdot \left(\frac{35{,}900}{6894}\right)^{10/3} = 249{,}645 \text{ hours}$$

Class C min hours = 5,000 ok ✓

Block Thrust Bearing

RT621 static Rating = 111,000 lbf

Load = 20,000 lbs < 111,000 lbs ok ✓

3. Shafts

Title	Sheet No. 1 of 2
TROLLEY DRIVE SHAFT	
By RPW / / Chk. / /	09.5025/26 Job No.

MATL: 1045 CR w/ ULT. TENSILE 91 KSI MIN.

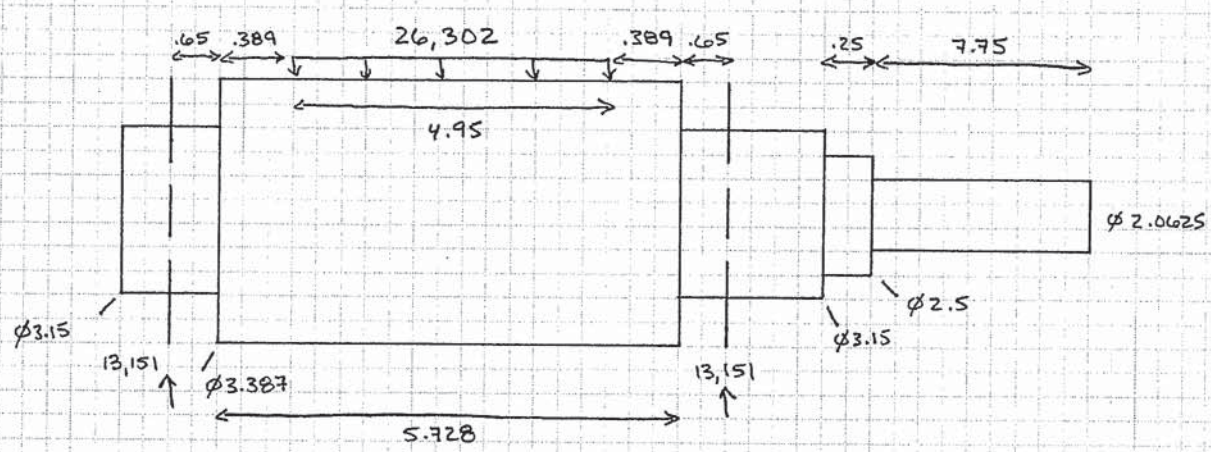

$$M_x = R_1 x - \frac{w(x-a)^2}{2} = 13{,}151(3.514) - \frac{\left(\frac{26{,}302}{4.95}\right)(3.514-1.039)^2}{2} = 29{,}938 \text{ IN-LBS}$$

$r = 3.387/2 = 1.6935$ IN

$S_x = \pi d^3/32 = \pi(3.387^3)/32 = 3.815 \text{ IN}^3$

$\delta_b = M/S = 29{,}938/3.815 = 7{,}847$ PSI OK ✓ ALLOWABLE: $91{,}000/5 = 18{,}200$ PSI

$J = \pi d^4/32 = \pi(3.387^4)/32 = 12.92 \text{ IN}^4$

$\tau_T = Tr/J = 5257(1.6935)/12.92 = 689$ PSI

$\tau_V = 1.33V/A = 1.33(13{,}151)/\pi(1.6935^2) = 1{,}941$ PSI

$\tau_\Sigma = \tau_T + \tau_V = 689 + 1{,}941 = 2{,}630$ PSI OK ✓ ALLOWABLE: $91{,}000/5\sqrt{3} = 10{,}508$ PSI

$$\delta_{COMB}: \sqrt{\delta_\Sigma^2 + 3(\tau_T)^2} \le \delta_u/5$$

$$= \sqrt{7{,}847^2 + 3(689)^2} \le 91{,}000/5 \qquad 7{,}937 \le 18{,}200 \text{ PSI} \quad \text{OK} ✓$$

KEYWAY STRESS

$K_{t_B}: 2.42 \quad K_S: 1.71 \quad \delta_e = .36\delta_{UM}K_{SC} \quad \delta_{UM} = 91{,}000 \quad K_{SC} = .75 \quad K_c = 1.06$

$$\delta_{F_\Sigma}: K_{t_B}\delta_b \le \delta_e/K_c$$

$$= 2.42(7{,}847) \le \frac{.36(91{,}000)(.75)}{1.06} \qquad 18{,}990 \le 23{,}179 \quad \text{OK} ✓$$

$$\tau_{F_\Sigma} = K_{S_T}\tau_T + K_{S_V}\tau_V \le \delta_e/K_c\sqrt{3}$$

$$= 1.71(689) + 1.71(1{,}941) \le \frac{.36(91{,}000)(.75)}{1.06(\sqrt{3})} \qquad 4{,}497 \le 13{,}383 \quad \text{OK} ✓$$

Title		Sheet No. 2 of 2
TROLLEY DRIVE SHAFT		
By RJW / /	Chk. / /	09.5025/26 Job No.

STRESS @ BEARING STEP

$M(x@.65) = R_1 x = 13{,}151(.65) = 8{,}548$ IN·LBS

$r = 3.15/2 = 1.575$ IN

$S_x = \pi d^3/32 = \pi(3.15^3)/32 = 3.069$ IN^3

$\delta_b = M/S = 8{,}548/3.069 = 2{,}785$ PSI OK✓ ALLOWABLE: $91{,}000/5 = 18{,}200$ PSI

$J = \pi d^4/32 = \pi(3.15^4)/32 = 9.6666$ IN^4

$\tau_T = Tr/J = 5257(1.575)/9.666 = 857$ PSI

$\tau_V = 1.33V/A = 1.33(13{,}151)/\pi(1.575^2) = 2{,}244$ PSI

$\tau_\Sigma = 857 + 2{,}244 = 3{,}101$ PSI OK✓ ALLOWABLE: $91{,}000/5\sqrt{3} = 10{,}508$ PSI

δ_{COMB}: $\sqrt{\delta_\Sigma^2 + 3(\tau_T)^2} \le \delta_b/5$

$= \sqrt{2{,}785^2 + 3(857^2)} \le 91{,}000/5$ $3{,}156 \le 18{,}200$ OK✓

STEP BENDING FACTORS

$K_t = 1.93$ TORSION FACTOR $= 1.3$

$\delta_{F_\Sigma} = K_{t_b}\delta_b \le \delta_e/K_c$ $1.93(2{,}785) \le 23{,}179$ $5{,}375 \le 23{,}179$ OK✓

$\tau_{F_\Sigma} = K_t\tau_T + K_t\tau_V \le \delta_e/K_c\sqrt{3}$ $1.3(857) + 1.3(2{,}244) \le 13{,}383$ $4{,}031 \le 13{,}383$ OK✓

MOTOR STEPS

$D_1 = \phi 3.15$ $D_2 = \phi 2.5$ $D_3 = \phi 2.0625$ $r = .125$

$r/D_3 = .06$ $r/D_2 = .05$ $r/D_3 = .04$

$J_{D_2} = \pi d^4/32 = \pi(2.5^4)/32 = 3.835$ IN^4

$J_{D_3} = \pi d^4/32 = \pi(2.0625^4)/32 = 1.777$ IN^4

D_2: $Tr/J = 5257(1.25)/3.835 = 1{,}713$ PSI OK✓ ALLOWABLE: 10,508 PSI

D_3: $Tr/J = 5257(1.03125)/1.777 = 3{,}051$ PSI OK✓

STEP TORSION FACTOR: $D_2 = 1.6$ $D_3 = 1.68$

D_2: $\tau_{F_\Sigma} = K_t\tau_T \le \delta_e/K_c\sqrt{3}$

$= 1.6(1{,}713) \le 13{,}382$ $2{,}741 \le 13{,}382$ OK✓

D_3: $\tau_{F_\Sigma} = K_t\tau_T \le \delta_e/K_c\sqrt{3}$

$= 1.68(3{,}051) \le 13{,}382$ $5{,}126 \le 13{,}382$ OK✓

Title		Sheet No. 1 of 2
BRIDGE DRIVE SHAFT		
By RPW / /	Chk. / /	09.5025/26 Job No.

MATL: 1045 CR W/ ULT. TENSILE 91 KSI MIN.

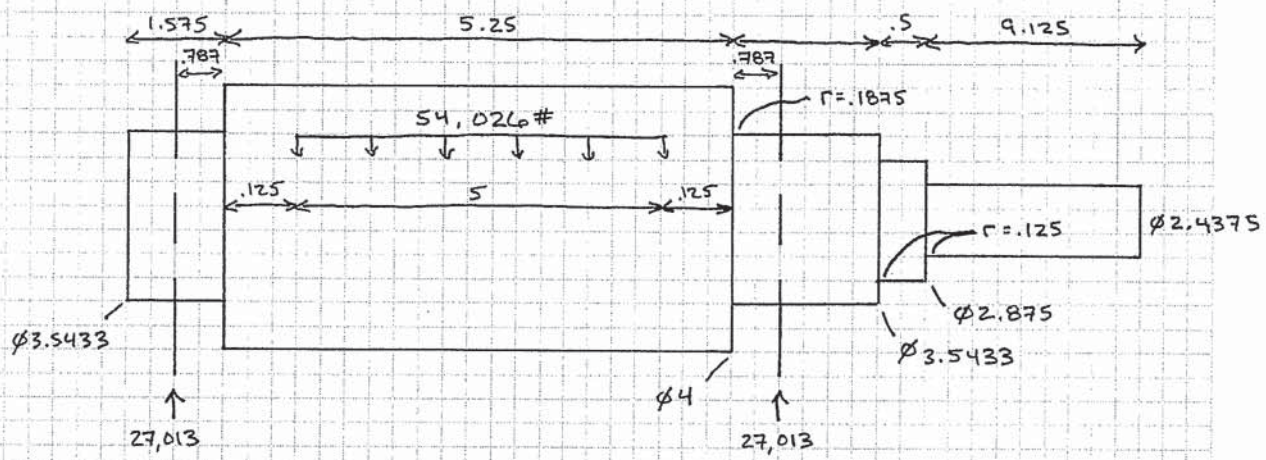

$$M_x = R_1 x - \frac{w(x-a)^2}{2} = 27{,}013(3.412) - \frac{\left(\frac{54{,}026}{5}\right)(3.412-.912)^2}{2} = 58{,}402 \text{ IN·LBS}$$

$r = 2''$

$S_x = \pi d^3/32 = \pi(4^3)/32 = 6.283 \text{ IN}^3$

$\delta_b = M/S = 58{,}402/6.283 = 9{,}295$ PSI OK ✓ ALLOWABLE $= 91{,}000/5 = 18{,}200$ PSI

$J = \pi d^4/32 = \pi(4^4)/32 = 25.133 \text{ IN}^4$

$\tau_T = Tr/J = 7{,}567(2)/25.133 = 602$ PSI

$\tau_V = 1.33V/A = 1.33(27{,}013)/\pi(2^2) = 2{,}859$ PSI

$\tau_\Sigma = \tau_T + \tau_V = 602 + 2{,}859 = 3{,}461$ PSI OK ✓

ALLOWABLE: $\delta_U/(5\sqrt{3}) = 91{,}000/5\sqrt{3} = 10{,}508$ PSI

$\delta_{COMB} = \sqrt{\delta_\Sigma^2 + 3(\tau_T)^2} \le \delta_U/5$

$= \sqrt{9{,}295^2 + 3(602)^2} \le 91{,}000/5 \Rightarrow 9{,}353 \le 18{,}200$ OK ✓

KEYWAY STRESS

K_{t_B}: 2.42 K_s: 1.71 $\delta_e = .36\,\delta_{UM} K_{sc}$ δ_{UM} = MIN. TENSILE = 91,000 $K_{sc} = .75$ $K_c = 1.06$

$\delta_{F_\Sigma} = K_{T_B}\delta_b \le \delta_e/K_c$

$= 2.42(9{,}295) = 22{,}494$ PSI $\le .36(91{,}000)(0.75)/1.06 = 23{,}179$ OK ✓

$\tau_{F_\Sigma} = K_{s_T}\tau_T + K_{s_V}\tau_V \le \delta_e/K_c\sqrt{3}$

$= 1.71(602) + 1.71(2{,}859) = 5{,}918 \le .36(91{,}000)(.75)/1.06(\sqrt{3}) = 13{,}382$ PSI OK ✓

Title		Sheet No. 2 of 2
BRIDGE DRIVE SHAFT		
By NJW / /	Chk. / /	09.5025/26 Job No.

STRESS @ BEARING STEP

$M(x @ .787) = R_1 x = 27{,}013(.787) = 21{,}259$ IN·LBS

$r = 3.5433/2 = 1.772''$

$S_x = \pi d^3/32 = \pi(3.5433^3)/32 = 4.367$ IN^3

$\delta_b = M/S = 21{,}259/4.367 = 4{,}868$ PSI ALLOWABLE: $91{,}000/5 = 18{,}200$ PSI OK✓

$J = \pi d^4/32 = \pi(3.5433^4)/32 = 15.475$ IN^4

$\tau_T = Tr/J = 7{,}567(1.772)/15.475 = 866$ PSI

$\tau_V = 1.33V/A = 1.33(27{,}013)/\pi(1.772^2) = 3{,}650$ PSI

$\tau_\Sigma = \tau_T + \tau_V = 866 + 3{,}650 = 4{,}516$ PSI ALLOWABLE $= 91{,}000/5 = 18{,}200$ PSI OK✓

$\delta_{COMB} = \sqrt{\delta_\Sigma^2 + 3(\tau_T)^2} \le \delta_U/5$

$= \sqrt{4{,}868^2 + 3(866)^2} \le 91{,}000/5 \quad = 5{,}094 \le 18{,}200$ PSI OK✓

STEP BENDING FACTORS

$K_t = 1.93$ TORSION FACTOR $= 1.3$

$\delta_{F_\Sigma} = K_{t_B}\delta_b \le \delta_e/K_c \qquad 1.93(4{,}868) \le 23{,}179 \qquad 9{,}395 \le 23{,}179$ OK✓

$\tau_{F_\Sigma} = K_t\tau_T + K_t\tau_V \le \delta_e/K_c\sqrt{3} \qquad 1.3(866) + 1.3(3{,}650) \le 13{,}382 \qquad 5{,}871 \le 13{,}382$ OK✓

MOTOR SHAFT STEPS

$D_1 = 3.5433 \quad D_2 = 2.875 \quad D_3 = 2.4375 \quad r = .125$

$r/d_3 = .05 \quad r/d_2 = .04 \quad D_1/D_2 = 1.23 \quad D_2/D_3 = 1.18$

$J_{D_2} = \pi d^4/32 = \pi(2.875^4)/32 = 6.707$ IN^4

$J_{D_3} = \pi d^4/32 = \pi(2.4375^4)/32 = 3.466$ IN^4

D_2: $Tr/J = 7{,}567(1.4375)/6.707 = 1{,}622$ PSI (τ_T) OK✓

ALLOWABLE: $91{,}000/5\sqrt{3} = 10{,}508$ PSI

D_3: $Tr/J = 7{,}567(1.219)/3.466 = 2{,}661$ PSI OK✓

STEP TORSION FACTOR: $D_2 = 1.67 \quad D_3 = 1.58$

D_2: $\tau_{F_\Sigma} = K_t\tau_T \le \delta_e/K_c\sqrt{3} \qquad 1.67(1{,}622) \le 13{,}382 \qquad 2{,}709 \le 13{,}382$ OK✓

D_3: $\tau_{F_\Sigma} = K_t\tau_T \le \delta_e/K_c\sqrt{3} \qquad 1.58(2{,}661) \le 13{,}382 \qquad 4{,}204 \le 13{,}382$ OK✓

ii. Brakes

Brake Selections

Full load motor torque T in ft-lbs is calculated by the following formula:

$$T = \frac{5{,}252xHP}{RPM}$$

1. Hoist Brakes

Requirements: Each hoist shall be equipped with two electro-mechanical brakes, each with a minimum torque rating of 130% of the rated motor torque.

Components:

Main hoist motor: 30HP 1,800 RPM

Main hoist brakes: Primary 125 ft-lbs Starels , and secondary 180 ft-lbs Jamison Industries

Aux hoist motor: 5HP 1,750 RPM

Aux hoist brakes: Primary 15 ft-lbs Starels , and secondary 20 ft-lbs Jamison Industries

	Motor			Brakes			
	HP	RPM	Calculated Motor Torque (ft-lbs)	Torque Required (ft-lbs)	Supplied Brake Torque (ft-lbs)		Selection
Main Hoist	30	1,800	87.5	113.8	Primary	125	OK
					Secondary	180	OK
Aux Hoist	3	1,750	9.0	11.7	Primary	15	OK
					Secondary	20	OK

Note: If hoist requires one brake and a mechanical load brake, NA the secondary brake cells.

2. Travel Brakes

Requirements: Each brake shall have a minimum torque rating equal to 50% of the drive motor rated torque.

Components

Bridge motor: 3HP 1,800 RPM

Bridge brake: 10 ft-lbs Starels

Trolley motor: 1.5HP 1,800 RPM

Trolley brake: 3 ft-lbs Starels

	Motor			Brakes		
	HP	RPM	Calculated Motor Torque (ft-lbs)	Torque Required (ft-lbs)	Supplied Brake Torque (ft-lbs)	Selection
Bridge	3	1,800	8.75	4.4	10	OK
Trolley	1.5	1,800	4.4	2.2	3	OK

iii. Couplings

Coupling Selections

Gear Couplings

Gear coupling minimum torque rating T required in in-lbs is calculated by the following formula:

$$T = \frac{63{,}000.(Motor\ Horse\ Power).(Service\ Factor)}{Motor\ RPM}$$

Components:

Main Hoist

Motor: 30HP, 1800 RPM max shaft diameter 3.375”

Coupling: 6,150 in-lbs torque rating, max speed 3,300 RPM, max bore capacity 3.625”

Aux Hoist

Motor: 3HP, 1800 RPM max shaft diameter 2.00”

Coupling: 4,125 in-lbs torque rating, max speed 3,300 RPM, max bore capacity 3.000”

Bridge

Motor: 3HP, 1800 RPM max shaft diameter 2.00”

Coupling: There is no coupling for bridge drive.

Trolley

Motor: 1.5HP, 1800 RPM max shaft diameter 2.00”

Trolley coupling: 4,125 in-lbs torque rating, max speed 3,300 RPM, and bore capacity 3.000”

	Motor			Calculated Transmitted Torque (in-lbs)	**Coupling**				
	HP	RPM	Max Shaft Diameter (in)		Service Factor	Torque Rating (in-lbs)	Max Speed Rating (RPM)	Max bore Capacity (in)	Selection
Main Hoist	30	1,800	3.375	2,100	2	6,150	3,300	3.625	OK
Aux Hoist	3	1,750	2.000	216	2	4,125	3,300	2.125	OK
Bridge	NA	NA	NA	NA	NA	NA	NA	NA	NA
Trolley	1.5	1,800	1.125	92	1.75	4,125	3,300	2.125	OK

Notes: 1. Service factor for drives are given by the coupling manufacturing.

2. Max shaft diameter refers to the larger shaft in the connection

3. NA cells those are not applicable.

Drum Barrel Couplings (provide one for each hoist as applicable)

Load to be Lifted, **Q** (lbs)	67,450	Hoist Tackle Reduction, $\mathbf{i_r}$	4
Hoist Weight, **G** (lbs)	2,250	Operating factor, $\mathbf{K_1}$	1.6
Drum and Cable Weight, **w** (lbs)	3150	Drum and Hoist Efficiency, $\mathbf{K_2}$	0.95
Motor Power, $\mathbf{P_i}$ (HP)	40	Rope to Coupling Distance, **b** (in)	16
Hoist Rated Speed $\mathbf{V_r}$ (fpm)	16	Drum Length, **l** (in)	48
Drum Turning Rate, **n** (rpm)	8	Gearbox Output Shaft Length, **d** (in)	8
Drum Diameter, **D** (in)	32	Coupling Compensation Factor**, C**	3.7

1. Calculation of Nominal Transmission Torque T (lb-ft)

Transmission torque T in ft-lbs based on installed power P_i is calculated by the formula

$$T = \frac{5{,}252.P_i.K_1}{n} = \frac{5{,}252.(40).(1.6)}{8} = 42{,}016 \text{ ft-lbs}$$

Preselected coupling size maximum torque rating T_N = 51,629 ft-lbs higher than the torque calculated by means of installed power above.

Selection OK

2. Calculation of Radial Load F to be withstood by the Coupling:

$$F = \left[F_p.\left(1-\frac{b}{l}\right)\right] + \frac{w}{2} = \left[18{,}344.\left(1-\frac{16}{48}\right)\right] + \frac{3{,}150}{2} = 13{,}804 \text{ lbs}$$

Where F_p = the static pull of the drum including efficiencies

The preselected coupling size withstands a radial load F_r= 25,850 lbs, higher than 13,804 lbs**.**
Selection OK

Corrected Radial Load F_A (Optional)

Let's suppose that the calculated radial load F turns out to be 30,000 lbs, higher than manufacture preliminary selection data F_r= 25,850 lbs. In this case, it is possible to make a second check by means of the corrected radial load F_A, prior to selecting a larger coupling size.

$$F_A = F_r + \left[(T_N - T).(C)\right] = 25{,}852 + \left[(15{,}736 - 11{,}678).(3.7)\right] = 40{,}866 \text{ lbs}$$

The coupling could withstand a radial load of up to 40,866 lbs > 30,000 lbs.

Selection OK

3. Geometric check of gearbox shaft:

According to the manufacture data, d_{max} = 8.5 inches > 8.0 inches (existing shaft diameter). Selection OK

N. Electrical Calculations

See following pages for examples of electrical calculations.

i. **Motor**

Traverse Motor Horsepower

The bridge acceleration factor (K_a) is calculated according to CMAA #70 5.2.9.1.2.1

$$K_a = \frac{f + \left(\frac{2000aC_r}{gE}\right)}{33000K_t} \left(\frac{N_r}{N_F}\right) = 0.0007$$

Where	f	=	Rolling friction for 8" wheels CMAA 70, Table 5.2.9.1.2-D	=	16	lbs/ ton
	a	=	Average acceleration CMAA 70, Table 5.2.9.1.2-A	=	0.25	ft / s^2
	C_r	=	Rotational inertia factor CMAA 70, 5.2.9.1.2.1	=	1.083	
	g	=	Gravity constant		32.2	ft / s^2
	E	=	Mechanical efficiency (Mfg. data)	=	0.93	
	K_t	=	Equivalent steady state torque relative to rated motor torque CMAA 70, Table 5.2.9.1.2-C	=	1.5	
	N_r/N_F			=	1 ← Worst Case Scenario (Assumption)	
	N_r	=	Rated speed of motor in rpm at full load			
	N_F	=	Free running rpm of motor when driving at speed V			

Required bridge motor horsepower is calculated according to CMAA #70, 5.2.8.1.1

$$HP = K_aWVK_S = \underline{\mathbf{0.21\ hp}}$$

Where	W	=	$2(EL_{BRIDGE,\ CASE\ 3}) + TRL$	=	13.5	tons
	$EL_{BRIDGE,\ CASE\ 3}$		Load Combination, Case 3		6.32	tons
	TRL	=	Bridge end truck weight	=	0.9	tons
	V	=	Rated drive speed in ft/min.	=	21	fpm
	K_S	=	Service factor CMAA 70, Table 5.2.9.1.2-E	=	1.1	

The bridge motor drive uses a single 0.25 hp motor which exceeds the required horsepower needed to move the bridge crane.

Hoist Motor

From *CMAA #70, 5.2.9.1.1.1*,

$$\text{Required Hoist Mechanical HP} = \frac{W(V)}{33000[(E_G)^N(E_S)^M}$$

Where	W	=	Weight to be lifted by hoist rope system	=	10,150 lbs
	V	=	Hoist Lift Speed	=	21 fpm
	E_G	=	Efficiency per gear reduction	=	0.97 CMAA 70, Table 5.2.9.1.1.1-1
	E_S	=	Rope system efficiency per rotating sheave	=	0.99 CMAA 70, Table 5.2.9.1.1.1-1
	N	=	Number of gear reduction	=	3 Horsburgh-Scott 80T
	M	=	Number of rotating sheaves Between the drum and equalizer passed over by each part of the moving rope attached to the drum	=	1

$$\text{Required Hoist Mechanical HP} = \frac{10{,}150 \text{ lbs } (21 \text{ fpm})}{33000[(0.97)^3(0.99)^1} = \underline{\mathbf{7.15\ HP}}$$

From *CMAA #70, 5.2.9.1.1.2,*

Required Hoist Motor HP = Required Hoist Mechanical HP (K_C)

Where	K_C	=	Control factor, which is a correction value that accounts for the effects the control has on motor torque and speed	=	1

Required Hoist Motor HP = **7.15 HP**

The proposed hoist motor is rated as 7.5 HP.

ii. **Overcurrent protection**

OVERCURRENT PROTECTIVE DEVICE CALCULATIONS

Overcurrent calculations for each applicable device with NEC references cited

OVERCURRENT PROTECTION

1. CRANE OVERCURRENT PROTECTION

Largest Branch Device:	80	Aac	
Other Loads:			
Bridge	8.2	Aac	
Trolley	4.4	Aac	
Hoist	34.2	Aac	
Other (service, fields, control xfmr, etc)	6.9	Aac	
TOTAL =	53.7	Aac	
Main Disconnect Selected:	100	Amp	Ref: NEC 610-41

2. HOIST BRANCH OVERCURRENT PROTECTION

(A) Hoist Load	34.2	Aac	
Maximum Allowable breaker:			
(A) x 2.5	85.5	Aac	
Branch Circuit Breaker Selected:	80	Amp	Ref: NEC 610-42

3. TROLLEY BRANCH OVERCURRENT PROTECTION

(A) Trolley Load	4.4	Aac	
Maximum Allowable breaker:			
(A) x 2.5	11.0	Aac	
Branch Circuit Breaker Selected:	10	Amp	Ref: NEC 610-42

4. BRIDGE BRANCH OVERCURRENT PROTECTION

(A) Bridge Load	8.2	Aac	
Maximum Allowable breaker:			
(A) x 2.5	20.5	Aac	
Branch Circuit Breaker Selected:	20	Amp	Ref: NEC 610-42

5. CRANE CONTROL TRANSFORMER XMR109

Transformer VA	2000	VA	
(A) Primary Current = (VA/460V)	4.34	Amps	
(B) Max Fuse Size: (A) x 2.5 =	10.85	Amps	Ref: NEC 450-3(b), NEC 430-72(C4)
Selected Protection: Class CC Time Delay Fuses	10.00	Amps	Ref: NEC 450-3(b)
(C) Secondary Current = (VA/115V)	17.39	Amps	
(D) Max Secondary Fuse Size: (C) x 1.25 =	21.74	Amps	Ref: NEC 450-3(b)
Selected Protection: Type ATQ Time Delay Fuses	25	Amps	Ref: NEC 450-3(b)

6. HOIST BLOWER MOTOR OVERCURRENT PROTECTION

(A) Blower Motor Load	0.7	Aac	
Maximum Allowable breaker:			
(A) x 2.5	1.75	Aac	
Branch Circuit Breaker Selected:	2	Amp	Ref: NEC 610-42

7. POWER AVAILABLE LIGHT TRANSFORMER XMR118

Transformer VA	150	VA	
(A) Primary Current = (VA/460V)	0.33	Amps	
(B) Max Fuse Size: (A) x 2.5 =	0.82	Amps	Ref: NEC 450-3(b)
Selected Protection: Class CC Time Delay Fuses	0.8	Amps	Ref: NEC 450-3(b)
(C) Secondary Current = (VA/115V)	1.3	Amps	
(D) Max Secondary Fuse Size: (C) x 1.67 =	2.17	Amps	Ref: NEC 450-3(b)
Selected Protection: Type ATQ Time Delay Fuses	2.0	Amps	Ref: NEC 450-3(b)

iii. **Conduit fill**

CONDUIT FILL CALCULATION SUBMITTALS

ELECTRICAL CALCULATIONS: CONDUIT FILL
REFERENCE TABLE NEC CHAPTER 9 TABLE 1

ARTICLE TABLES 344 RMC , 348 FMC

TRADE SIZE:	FILL @ 40% INCHES /SQ RMC	FMC
1/2"	0.125	0.127
3/4"	0.220	0.213
1"	0.355	0.327
1 1/4"	0.610	0.511
1 1/2"	0.829	0.743
2"	1.363	1.307

NEC Articles Cited with Snapshot of Tables from Chapter 9 provided

CONDUIT #1 (CONDUIT # REFERENCE DWG. 416)

4- 2AWG SRML @ .486 NOM O.D. / 0.1854" SQ.

4 (0.1854)= 0.7416" SQ TOTAL

CONDUIT RUN #1 - 1 1/2" RMC or LARGER

CONDUIT #2 (CONDUIT # REFERENCE DWG. 416)

3- 10 AWG THHN @ .165 NOM O.D. / 0.0213" SQ.

3 (0.0213)= 0.0641" SQ TOTAL

CONDUIT RUN #2 - 1/2" RMC or LARGER

Information provided includes:
* Conduit run referenced
* Quantity and type of conductors
* Calculations shown to determine cross-sectional areas of specified conductors
* Total area calculated, then compared to Table 1 from NEC per total quantity of conductors to determine % allowable fill
* Chapter 9 conduit-specific Article Tables consulted for correct size

CONDUIT #3 (CONDUIT # REFERENCE DWG. 416)

4- 2AWG SRML @ .486 NOM. DIA. / 0.1854" SQ.
4-(0.1854)= 0.7416 SQ TOTAL

CONDUIT RUN #3 - 1 1/2" RMC or LARGER

CONDUIT #4 (CONDUIT # REFERENCE DWG. 416)

3- 10 AWG THHN @ .165 NOM O.D. / 0.0213" SQ.

3 (0.0213)= 0.0641" SQ TOTAL

CONDUIT RUN #4 - 1/2" RMC or LARGER

CONDUIT #5 (CONDUIT # REFERENCE DWG. 416)

3- 4 AWG THHN @ .325 NOM O.D. / 0.0829" SQ.

3 (0.0829)= 0.248" SQ TOTAL

CONDUIT RUN #5 - 1" RMC or LARGER

CONDUIT #6 #7 #8 (CONDUIT # REFERENCE DWG. 416)

3- 12 AWG THHN @ .131 NOM O.D. / 0.0133" SQ.

3 (0.0133)= 0.0399" SQ TOTAL

CONDUIT RUN #6 #7 #8 - 1/2" RMC or LARGER

CONDUIT #9 (CONDUIT # REFERENCE DWG. 416)

33" SQ.

ICE DWG. 416)

3" SQ.

CONDUIT RUN #10 #11 - 11/4" RMC/ FMC or LARGER

CONDUIT #12 (CONDUIT # REFERENCE DWG. 416)

3- 8 AWG SRML @ .316 NOM O.D. / 0.0783" SQ.

3 (0.0783)= 0.2351" SQ TOTAL

CONDUIT RUN #12 - 1" RMC/ FMC or LARGER

CONDUIT #13 (CONDUIT # REFERENCE DWG. 416)

3- 12 AWG SRML @ .180 NOM O.D. / 0.0254" SQ.

3 (0.0254)= 0.0763" SQ TOTAL

CONDUIT RUN #13 - 1/2" RMC/ FMC or LARGER

CONDUIT #14 #15 (CONDUIT # REFERENCE DWG. 416)

3- 12 AWG SRML @ .180 NOM O.D. / 0.0254" SQ.

3 (0.0254)= 0.0763" SQ TOTAL

CONDUIT RUN #14 #15 - 1/2" RMC/ FMC or LARGER

CONDUIT #16 (CONDUIT # REFERENCE DWG. 416)

3- 10 AWG THHN @ .165 NOM O.D. / 0.0213" SQ.

3 (0.0213)= 0.0641" SQ TOTAL

CONDUIT RUN #16 - 1/2" RMC or LARGER

CONDUIT #17 (CONDUIT # REFERENCE DWG. 416)

40- 14 AWG THHN @ .112 NOM O.D. / 0.0098" SQ.

40 (0.0098)= 0.3938" SQ TOTAL

6- #8770 BELDEN @ .246 NON O.D. / 0.0486" SQ.

6 (0.0486)= 0.2920" SQ TOTAL

0.3938 + 0.2920= 0.6858" SQ GRAND TOTAL

CONDUIT RUN #17 - 1 1/2" RMC or LARGER

CONDUIT #18 #19 (CONDUIT # REFERENCE DWG. 416)

4- 8 AWG THHN @ .216 NOM O.D. / 0.0366" SQ.

4 (0.0366)= 0.1464" SQ TOTAL

4- 14 AWG THHN @ .112 NON O.D. / 0.0098" SQ.

4 (0.0098)= 0.0392" SQ TOTAL

0.1464 + 0.0392= 0.1856" SQ GRAND TOTAL

CONDUIT RUN #18 #19 - 3/4" RMC or LARGER

CONDUIT #20,#21 (CONDUIT # REFERENCE DWG. 416)

3- 12 AWG THHN @ .131 NOM O.D. / 0.0133" SQ.

3 (0.0133)= 0.0399" SQ TOTAL

CONDUIT RUN #20, #21 - 1/2" RMC or LARGER

iv. **Protective device coordination study**

PROTECTIVE DEVICE COORDINATION STUDY EXAMPLE

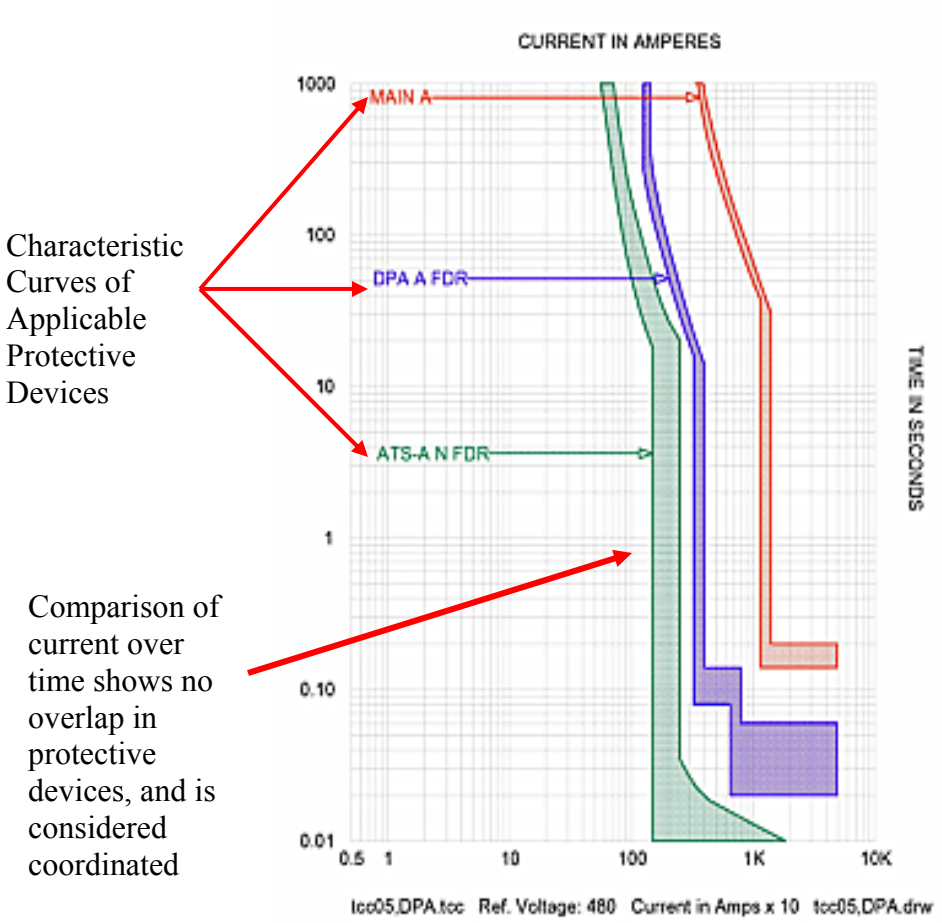

- Characteristic curve information is available from all protective device manufacturers.
- Coordination study software is available, but typical studies can be hand-drawn provided that scales are kept consistent and accurate.
- Coordination of protective devices is accepted when the study provides proof that, given an overcurrent situation, only the intended unit will be removed from service, and that no other upstream equipment will be affected.

v. **Lighting**

Luminaire Schedule				
Symbol	**Qty**	**Description**	**Lumens**	**LLF**
⊡	9		23144	0.700

Appropriate Light Loss Factor chosen

Calculation Summary						
Label	**CalcType**	**Units**	**Avg**	**Max**	**Min**	**Max/Min**
CalcPts	Illuminance	Fc	41.07	51.0	27.0	1.89

For this example, 40 foot-candles (Fc) were desired. With the chosen lamp size, an average of 41.07 Fc has been met.

Luminaire Location Summary				
LumNo	**Label**	**X**	**Y**	**Z**
1	Q1000PMF	4.5	0	40
2	Q1000PMF	15.5	0	40
3	Q1000PMF	26.5	0	40
4	Q1000PMF	37.5	0	40
5	Q1000PMF	48.5	0	40
6	Q1000PMF	59.5	0	40
7	Q1000PMF	70.5	0	40
8	Q1000PMF	81.5	0	40
9	Q1000PMF	92.5	0	40

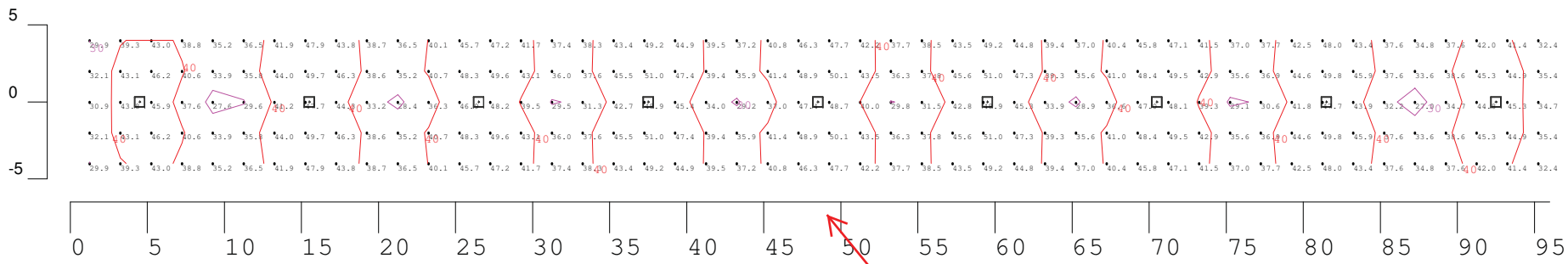

Typical diagram of affected area showing proposed layout to provide symmetrical light distribution

O. Hook & Nut Non-Destructive Test (NDT) Report

Please see the following pages for samples NDT report information.

Navy message on acceptable Hook NDT practice:

Subject: Crane Hook and Nut NDT Quality Assurance Requirements

Ref A: NAVFAC P-307

Date: June 1, 2003

1. Ref A, Appendix E, Paragraph 1.4.4 provides nondestructive test (NDT) quality assurance requirements for hooks, retaining nuts, and/or eye pins. These assurance requirements include provisions that the commercial NDT vendor supply a letter certifying that the vendor meets the requirements of ASTM E-543 and that the vendor develop and submit for review, procedures that are specific to the types, shapes and sizes of the parts being examined. For the magnetic particle inspection (MT) method, the procedures shall adequately describe the orientation of the hook, nut, or pin with the magnetizing equipment.

   Additionally, the procedures shall be reviewed by a Level III Examiner who is independent of the vendor and is certified in the applicable NDT method.

2. NCC has received letters of compliance to ASTM E-543 and MT procedures from two hook manufacturers. The manufacturers are the Crosby Group and Gunnebo Johnson. NCC has had the MT procedures reviewed by an independent Level III Examiner and the procedures have been found to be in agreement with Ref A requirements. NCC will retain this documentation in accordance with Ref A.

3. Activities that receive hooks and hook nuts with initial NDT reports from the Crosby Group or Gunnebo Johnson are not required to obtain letters of conformance or MT procedures from these vendors since these documents are retained by NCC. Activities are required to retain hook and hook nut NDT reports in the equipment history file in accordance with Ref A. Initial NDT reports received from Crosby or Gunnebo Johnson, subsequent to the issuance of this message, shall specifically reference the applicable Control Procedure No. 0120, revision 16 and Technique Sheet No. 319N, Rev 1. For Gunnebo Johnson, the NDT report shall reference Gunnebo Johnson Quality System Procedure QSP-69, Revision A.

4. When NDT of the hook is required, activities are reminded that purchase orders or contracts should clearly state that the NDT of hooks and hook nuts shall be in accordance with Ref A. Crosby and Gunnebo Johnson have indicated that the applicable MT procedures will only be invoked when NDT in accordance with Ref A is specified on the purchase order or contract.

5. NCC will contact other hook vendors and invite them to submit NDT procedures for approval to the requirements of Ref A. Any questions concerning NDT quality assurance requirements should be directed to NCC.

the Crosby group, inc.

THE CROSBY GROUP, INC.

QUALITY CONTROL

PROCEDURE NO. 0120

FOR: MAGNETIC PARTICLE INSPECTION

REVISION IV - JUNE 16, 1989
REVISION V - JULY 11, 1989
REVISION VI - JULY 10, 1990
REVISION VII - AUGUST 15, 1991
REVISION VIII - JUNE 26, 1992
REVISION IX - MARCH 18, 1993
REVISION X - JULY 28, 1994
REVISION XI - SEPTEMBER 13, 1994
REVISION XII - JULY 18, 2000
REVISION XIII - October 30, 2000
REVISION XIIII-August 14, 2002
REVISION 15- September 23, 2002
REVISION 16 - September 15, 2003
7 PAGES

UNCONTROLLED

PREPARED BY: Don Conner DATE: 9/15/03

APPROVED BY: Paul Dolchmann DATE: 9/15/03

1.01 SCOPE

1.1 This procedure is to be used for magnetic particle inspection using either the wet fluorescent or dry powder method.

2.0 PURPOSE

2.1 The inspection process provides for the detection of cracks and other discontinuities and shall be applicable only to ferromagnetic materials.

2.1.1 The sensitivity of the test is greatest for surface discontinuities and diminishes rapidly with depth below the surface.

2.1.2 For the detection of subsurface discontinuities, other inspection methods may be required.

3.0 REFERENCE STANDARDS

3.1 ASTM E709
3.2 AWS D1.1
3.3 MIL-STD-271 (Crosby McKissick only, See 5.1.2.1)
3.4 NAVSEA T 9074-AS-GIB-010/271, **with appropriate technique sheet**

4.0 PERSONNEL QUALIFICATION

4.1 Personnel performing and interpreting magnetic particle testing shall be trained and qualified per the Crosby Group Quality Procedure 4500 NDE, meeting or exceeding the requirements of SNT-TC-1A, Level II.

5.0 EQUIPMENT AND MATERIALS

5.1 Equipment

5.1.1 The types of equipment to be used are wet stationary horizontal units, **and DC Yokes.**

5.1.2 Equipment shall be calibrated annually by a means traceable to the National Institute of Standards and Technology. Comparative readings shall be taken at a minimum of three (3) output levels encompassing the usable range. The equipment readings shall not deviate by more than ± 10% of full scale.

5.1.2.1 Crosby McKissick equipment shall be calibrated every six (6) months, and shall be traceable to the National Institute of Standards and Technology. **Amp meter accuracy shall be ±5%.**

5.2 Magnetic Particles

5.2.1 The magnetic particle powder used in the dry powder method shall be type Magnaflux #3 black or equivalent. Examination shall be performed in an area with sufficient lighting to aid in observing the powder patterns.

5.2.2 The magnetic particle powder used in the wet method shall be type 14-A Magnaglow Powder or equivalent. The examination shall be conducted in a darkened area using a filtered black light.

5.2.3 The carrier shall be water based.

5.3 Black Light

5.3.1 The black light will be allowed to warm up a minimum of five (5) minutes prior to use.

5.3.2 The black light intensity shall be measured once a day and documented. The black light intensity at the examination surface (15 inches minimum from the face of the lens filter) shall not be less than 1000 $\mu W/cm^2$.

5.4 Batch Concentration

5.4.1 Bath concentration shall be checked daily and documented. The settling volume shall be 0.1 to 0.4 mL in a 100mL batch sample.

5.4.2 The suspension shall be run for at least 30 minutes before sampling. The 100 mL suspension sample shall be taken in an Test Method D96, pear-shaped centrifuge tube with a 1 mL stem and allowed to settle for approximately 30 minutes.

5.4.3 If the settled particles appear to be loose agglomerates rather than a solid layer, take a second sample. If still agglomerated, replace the suspension.

5.5 Suspension Vehicles

5.5.1 Suspension vehicles shall be conditioned water having good wetting characteristics, good dispersibility, and is non-corrosive.

5.5.2 The viscosity should not exceed $5mm^2$ (5.0cSt) when tested in accordance with test method D445.

5.5.3 The pH of the conditioned water bath should be between 6.0 and 10.5 as determined by a suitable pH meter.

6.0 Surface Preparation

6.1 The surface of the part to be examined shall be essentially clean, dry and free of contaminants such as oil, grease, rust, loose sand, loose scale, lint, galvanizing, thick paint, welding flux and weld splatter. Thin non-conductive coatings in the order of 2 mils (0.5mm) need not be removed except at the point(s) of electrical contact.

6.2 As-welded, as-cast, as-forged, as-rolled or machined surfaces are satisfactory. When cleaning is required, the test surface may be cleaned by detergent, organic solvents, or mechanical means. Cast steel products shall be sand blasted or shot blasted prior to performing magnetic particle inspection.

7.0 Magnetizing Current

7.1 Magnetic particle inspection may be performed with equipment utilizing direct current (DC), alternating current (AC), half-wave rectified current (HW) or full wave rectified current (FWDC).

8.0 Part Magnetization

8.1 Parts shall be inspected using the Continuous Magnetization Technique.

8.1.1 Parts may be magnetized by passing the current directly through the part (direct magnetization) or by inducing a magnetic field in the part (indirect magnetization).

8.1.2 Parts shall be magnetized and examined in at least two (2) directions with the magnetic fields approximately 90° apart.

8.2 Dry magnetic powders shall be applied by hand powder applicators in such a manner that a light uniform, dust-like coating settles upon the surface of the test part. The technique will suspend the particles in the air so they reach the part surface in a uniform cloud with a minimum of force.

8.3 Before turning off the current, the excess dry powder is removed by a dry air current of sufficient force without disturbing any particles attracted by a flux leakage field.

8.4 Wet magnetic particles are to be flowed over the test piece until completely covered and the bath application cut off before removing the magnetizing current.

9.0 MAGNETIC FIELD STRENGTH

9.1 Circular Magnetization - Head and Tailstock Clamps

9.1.1 DC, FWDC, or HW current shall be used from 700 to 900 A/inches on parts diameters up to 5 inches, from 500 to 700 A/inches on diameters over 5 inches and up to 15 inches, and from 100 to 300 A/inches on diameters over 15 inches.

9.1.2 Optimum current setting shall be determined by use of a magnetic field indicator.

9.2 Yokes

9.2.1 DC Yokes shall have a lifting force of 40 Lbs. minimum

9.3 Longitudinal Magnetization

9.3.1 Longitudinal magnetization may be accomplished by use of a fixed coil. The effective field extends on either side of the coil a distance equal to the radius of the coil (R) being employed. The effective field length shall not exceed 9 inches either side of the coil.

9.3.2 The magnetizing amperage required for longitudinal magnetization shall be calculated from the following equations:

$$I = \frac{NI}{N} = \frac{45000}{L/D} \quad (\pm 10\%)$$

Where:

I = Coil current to be used, amperes
N = Number of turns in the coil
L = Part length, inches
D = Part diameter, inches.
NI = Ampere turns
R = Coil Radius

9.3.2.1 For L/D ratios less that 3, a ferromagnetic pole piece, approximately the same diameter as the part, should be used to increase the L/D ratio, or an alternate magnetization method used.

9.3.2.2 For L/D ratios greater than 15, a maximum L/D value of 15 should be used.

9.3.3 A magnetic field indicator (pie gage) **shall** be used to determine and assure the optimum current setting.

9.3.4 Procedure qualification shall be in accordance with MIL.-STD-271, paragraph 4.3.1.2. And NAVSEA Technical Publication T 9074-AS-GIB-010/271, Paragraph 4.3.1.2

10.0 DEMAGNETIZATION

10.1 Demagnetization is not required unless specified on the drawings, specifications, or purchase order. When required, the acceptable level of residual magnetization usually not exceeding 3 gauss, and the measuring method shall also be specified.

11.0 POST CLEANING

11.1 The removal of the magnetic particle powders is not required, unless otherwise specified on the drawing or purchase order.

11.2 Unless otherwise specified on the drawing or purchase order, magnetic particle powder removal, when specified, shall be accomplished with compressed air and / or solvent.

12.0 INTERPRETATION OF INDICATIONS

12.1 All indications shall be investigated to determine if they are of a relevant or non-relevant nature. The surface of the part shall be reconditioned by grinding and then re-examined in accordance with this procedure. The grinding shall be parallel to the contour of the part to produce a smooth surface. Gouge grinding is not allowed.

13.0 ACCEPTANCE LEVELS

13.1 Production forgings shall be evaluated in accordance with specific product Quality Control Procedures and / or nondestructive testing (N.D.T.) Product drawings.

13.2 Customer specified magnetic particle inspected products shall be evaluated in accordance with the acceptance criteria per the drawing requirements or as specified on the purchase order.

14.0 MATERIAL REPAIR

14.1 This specification may be used for the localized inspection of excavated areas of castings prior to weld repair, and the evaluation of the area shall be no indications allowed.

the Crosby group inc.
P.O. Box 3128
2801 Dawson Road
Tulsa, OK 74101-3128

No. 319 N Rev. 1 Date: 10/30/02

Subject: Magnetic Particle Examination Technique Sheet

01. This Technique Sheet is to be used in conjunction with Crosby Group Magnetic Particle inspection procedure number 0120.

02. Identification of items for inspection:
Shank Hoist Hook and Nut (Hex / Round)

03. Whether wet or dry method:
Wet Method

04. Sequence of examination and required coverage: Head shot – 100% coverage (Hook and Nut)
Coil Shot – 100% coverage (Hook)

05. Method of particle application and removal:
Application: Hose Bath
Inspection Removal: None
Final Removal: Air Hose

06. Sketches or chart showing the typical inspection grid: S0319MP0001

07. Type of magnetic particles: 14-A Magnaglow Powder or Equivalent

08. Equipment: Wet Stationary Horizontal Unit **HWDC**

09. Direction of magnetization and current levels: Will be verified with field indicator.
9.1 Circular Magnetization (Head Shot): See Table 1
9.2 Longitudinal Magnetization (Coil Shot): See Table 2
9.2.1 Low, Intermediate or High-Fill Factor Coil: Low
9.3 Central Conductor Magnetization: N/A

10. Magnetizing current type (continuous or residual): Continuous

11. Test for concentration of particle suspension: Test Method D96

12. Demagnetization of particle suspension: N/A

13. Acceptance Criteria: Mil-Std-2035 - No indications greater than 1/16".
Indications believed to be non-relevant shall be inspected for relevancy by removing 10% of the surface roughness thought to have caused the indications. If inspection by MT after surface roughness removal shows any indication. All remaining indications shall be considered relevant.

Approval Don Conner Date 6/12/03

Qc procedures/magnetic particle examination technique sheet.doc

TABLE 1 HEAD SHOT

Frame Size	Hook	Thread Size	Nut
D	565 –730 Amps	1/2"	525 – 675 Amps
F	660 – 845 Amps	5/8"	660 – 845 Amps
G	810 – 1045 Amps	5/8"	660 – 845 Amps
H	915 – 1180 Amps	3/4"	790 – 1015 Amps
I	1140 – 1465 Amps	7/8"	875 – 1125 Amps
J	1440 – 1855 Amps	1 1/8"	1140 – 1465 Amps
K	1840 – 2365 Amps	1 1/4"	1265 – 1630 Amps
L	2060 – 2645 Amps	1 5/8"	1750 – 2250 Amps
N	2450 – 3150 Amps	2"	2190 – 2815 Amps

TABLE 2 COIL SHOT (+ / - 10%)

Frame Size	Hook	Shot
D	1420 Amps	1
F	1490 Amps	1
G	1645 Amps	1
H	1650 Amps	1
I	1700 Amps	1
J	1780 Amps	1
K	1890 Amps	1
L	1965 Amps	1
N	1890 Amps	1

A	DWG. NO.	CHG.
	S0319MP0001	—

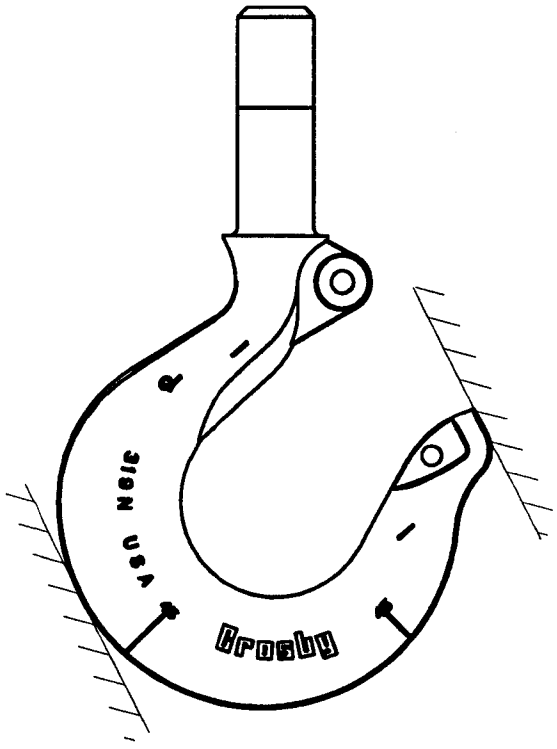

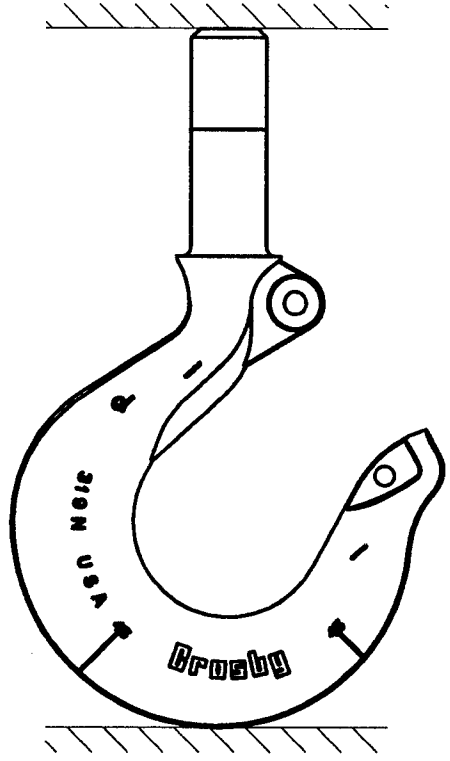

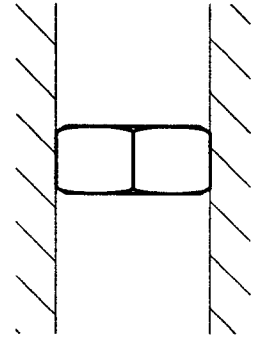

AXIALLY ROTATE 90°
AND RE–EXAMINE

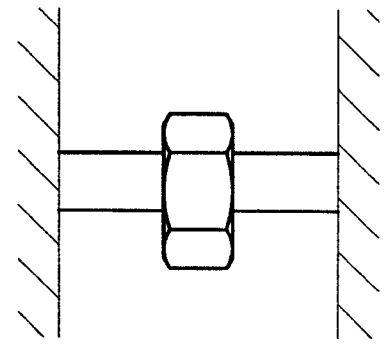

AXIALLY ROTATE 180°
AND RE–EXAMINE

NO.	CN NUMBER AND CHANGE	BY	DATE
4			
3			
2			
1			

UNLESS NOTED OTHERWISE:
DIMENSION IN INCHES
RADII: .06
DRAFT ANGLE: 7°
MACH. FINISH 125 RMS
TOLERANCE
ASSY DIMS. REF ONLY
FORGING DIMS ±.03
MISMATCH .015 MAX.
MACHINE DIMENSIONS:
.00 ± .01
.000 ± .002

MATERIAL	HARDNESS	TITLE
—	— —	TECHNIQUE SHEET 319N HOOK AND NUT

DRAWN	DATE	SCALE
DM	10/30/02	NONE

CHECKED	ASSY/DIE NO.	APPROX. WT.	PART NO./FILE NO.
EDR–	— —	–#	—

LEBUS
McKISSICK

the Crosby group

CROSBY–WESTERN
NATIONAL

A	DWG. NO.
	S0319MP0001

GLOBE X-RAY SERVICES, INC.

8441 SOUTH UNION TULSA, OKLAHOMA 74132

N.R.C. 435-15194-01

For Services or Information
Pertaining To: NDE SERVICES & SCHEDULING
NDE LEVEL III SERVICES & SCHOOL FOR LEVEL II
Contact: DAVID POTTER, LEVEL III
TONY OZMUN, LEVEL III
PHONE: (918) 446-1696 FAX: (918) 446-3314

Date: 10-21-02

Review for approval: The Crosby Group
Magnetic Particle Procedure 0120, Rev. 15
With attached technique for 319N, 320N, 322N Style Hoist Hooks

Compliance Requirements: NAVSEA T 9074-AS-GIB-010/271
Mil-Std-2035 Acceptance

✓ Approved

_____ Not Approved

ASNT Level III David Potter ASNT MM-1855

the Crosby group, inc.
Group Engineering Department
Mailing: P.O. Box 3128 (74101-3128)
Shipping: 2801 Dawson Road (74110-5052)
Tulsa, Oklahoma
Phone: 918.834.4611
Facsimile: 918.834.9447

DNV Certification, Inc. USA
ACCREDITED REGISTRAR ANSI-RAB
DNV MSC The Netherlands Accredited by the RvA
ISO 9001 REGISTERED FIRM

Facsimile

To: Scott Gridley	Date: July 8, 2009
Company: Navy Crane Center	From: dconner Title:
Fax Number: 757-396-1772	Number of Pages: 1

Reference: Program C of C

This is to certify that The Crosby Group Nondestructive Testing Program meets the requirements specified in ASTM E-543-99.

Respectfully,
Don Conner
Group QA Mgr.

Reference Crosby QCP 0120, Rev. 16, dated September 15, 2003
Technical Data Sheet 319N, Rev. 1

Document4

P. Wire Rope Certificate

Please see the following page for an example of this item.

GENERIC WIRE ROPE CO.

09/07/2008

Crane Parts Manufacturers
123 Crane Center Way
Portsmouth, VA 23709

Contract Number:	NXXXXX-XX-X-XXXX
Job Location:	Anytown, US
Crane Serial Number:	XX-XXXXX
CDRL:	XXXX

Required identifying information.

INSPECTION-CERTIFICATE acc. EN-10204-3.1

Your order-no.	:	78694	date	:	09.10.2007
our order-no.	:	17431329	delivery-no	:	18441090
Invoice-no.	:	18451131	LOT#	:	6618A+B; 6619A+B

The technical details of the ropes are the following:

1.	lay	:	regular right ordinary lay (RHOL) swaged - greased
2.	length	:	LOT # 6618A = 1.015 m; LOT # 6618B = 2.020 m LOT # 6619A = 1.010 m LOT # 6619B = 2.160 m
3.	nominal rope diameter	:	10,0 mm
4.	construction	:	PYTHON-LOGGING 6WS-V
5.	material	:	bright
6.	tensile strength	:	2160 N/mm²
7.	minimum breaking load actual breaking load	: :	96,08 kN 115,45 kN
8.	weight total	:	3.197 kg

Required information.

Joe Generic
Joe Generic
Customer Service

Signature of responsible person.

456 Wire Way
Portsmouth, VA 23709
Phone: 555-897-1212
Fax: 555-897-1213

Q. Periodic Overload Test Certificate

Please see the following page for an example of this item.

Crane Parts Manufacturers

Navy Contract No.: NXXXX-XX-X-XXXX D.O. XXXX
Crane Serial No.: XX-XXXX
Location: Shipyard ABC, Anytown, US
CDRL: XXXX

Required identifying information.

Certification of Period Load Testing

This is to certify that the equipment listed below is capable of semi-annual load testing up to 131.25% (+0%) of the rated capacity without any detrimental effects.

Required statement of load test effects.

Bill Smith
Bill Smith
Quality Assurance Manager

5/25/10
Date

Required signature of responsible person.

123 Crane Center Way, Portsmouth, VA 23709
Phone (555) 123-4567 Fax (555) 123-5678

R. Crane Runway Rail Certificate & Survey

Please see the following pages for a sample Runway Rail Certification and survey.

Crane Parts Manufacturers

2 - 19 - 10

Date

Contract No.: NXXXX-XX-X-XXXX
Job Location: Shipyard ABC
Crane Serial No.: XX-XXXXX

Required identifying information.

Certification of Rail Survey - CDRL – XXXX
CDRL #

Crane Parts Manufacturers (CPM) has reviewed the runway survey provided by the Navy Crane Center for the Naval Shipyard Building ABC. The span, straightness and rail elevation are all within the tolerances provided within CMAA #70. The rail to rail elevation exceeds the CMAA #70 tolerance at one point by 1/6".

CPM concludes that the rail is not in compliance with CMAA #70 runway standards. The new crane furnished under this contract will perform on this runway without any corrections to the runway.

Jane Smith
Signature

Vice President
Title

Required signature of responsible person.

123 Crane Center Way, Portsmouth, VA 23709
Phone (555) 123-4567 Fax (555) 123-5678

Rail Survey for Crane 123 in Building ABCD

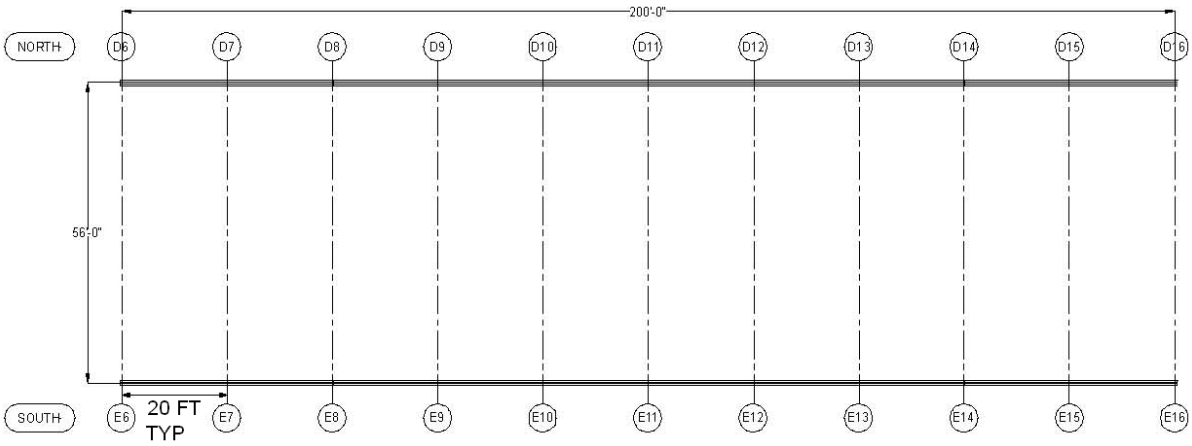

Crane Span					
Column Line	**Span (L)** Nominal 672 in	**Span Difference** in	**Allowable** L>100' 0.375 in	**Rate of Change** in	**Allowable Rate of Change** 1/4" in 20'
D6/E6	672.00	0.00			
D7/E7	672.15	0.15		-0.15	
D8/E8	672.30	0.30		-0.15	
D9/E9	672.25	0.25		0.05	
D10/E10	672.15	0.15		0.10	
D11/E11	672.38	0.38	EXCEED	-0.23	
D12/E12	672.12	0.12		0.26	EXCEED
D13/E13	672.15	0.15		-0.03	
D14/E14	672.35	0.35		-0.20	
D15/E15	672.13	0.13		0.22	
D16/E16	672.00	0.00		0.13	

Rail-to-Rail Elevation				
Column Line	**Elevation Difference (D)** in	**Allowable** L>100' 0.375 in	**Rate of Change** in	**Allowable Rate of Change** 1/4" in 20'
D6/E6	0.25			
D7/E7	0.36		-0.11	
D8/E8	0.15		0.21	
D9/E9	0.4	EXCEED	-0.25	
D10/E10	0.25		0.15	
D11/E11	0.15		0.1	
D12/E12	0		0.15	
D13/E13	0.1		-0.1	
D14/E14	0.25		-0.15	
D15/E15	0.38	EXCEED	-0.13	
D16/E16	0.15		0.23	

Straightness				
Column Line	**Straightness**	**Allowable** 0.375 in	**Rate of Change** in	**Allowable Rate of Change** 1/4" in 20'
D6	0.15			
D7	-0.15		0.30	EXCEED
D8	0.10		-0.25	
D9	0.15		-0.05	
D10	0.05		0.10	
D11	0		0.05	
D12	-0.10		0.10	
D13	-0.05		-0.05	
D14	-0.10		0.05	
D15	0.10		-0.20	
D16	0.15		-0.05	

Straightness				
Column Line	**Straightness**	**Allowable** 0.375 in	**Rate of Change** in	**Allowable Rate of Change** 1/4" in 20'
E6	0.10			
E7	0.05		0.05	
E8	0.10		-0.05	
E9	0.15		-0.05	
E10	0.05		0.10	
E11	0		0.05	
E12	-0.10		0.10	
E13	-0.05		-0.05	
E14	0.05		-0.10	
E15	0.15		-0.10	
E16	0.2		-0.05	

Elevation				
Column Line	**Elevation**	**Allowable** 0.375 in	**Rate of Change** in	**Allowable Rate of Change** 1/4" in 20'
D6	0.15			
D7	-0.15		0.30	EXCEED
D8	0.10		-0.25	
D9	0.15		-0.05	
D10	0.05		0.10	
D11	0		0.05	
D12	-0.10		0.10	
D13	-0.05		-0.05	
D14	-0.10		0.05	
D15	0.10		-0.20	
D16	0.15		-0.05	

Elevation				
Column Line	**Elevation**	**Allowable** 0.375 in	**Rate of Change** in	**Allowable Rate of Change** 1/4" in 20'
E6	0.10			
E7	0.05		0.05	
E8	0.10		-0.05	
E9	0.15		-0.05	
E10	0.05		0.10	
E11	0		0.05	
E12	-0.10		0.10	
E13	-0.05		-0.05	
E14	0.05		-0.10	
E15	0.15		-0.10	
E16	0.2		-0.05	

S. Hazardous Material Certificate

Please see the following page for a sample Hazardous Material Certificate.

Crane Parts Manufacturers

Required identifying information.

Hazardous Material Certification – CDRL XXXX

Contract Number: NXXXXX-XX-X-XXXX Delivery Order XXXX
Job Location: Anywheresville Shipyard, Building 1232, Portsmouth, VA
Crane Serial No.: XX-XXXX

Statement must include all hazardous material listed in specification.

Crane Parts Manufacturers certifies that the X Ton Crane system contains no asbestos, lead paint or elemental mercury.

Jane Smith

Approved By: Jane Smith
Title: Vice President

2 - 18 - 10

Date

Required signature of responsible person.

123 Crane Center Way, Portsmouth, VA 23709
Phone (555) 123-4567 Fax (555) 123-5678

T. Loss of Power Certificate

Please see the following page to find a sample Loss of Power Test Certificate.

Crane Parts Manufacturers

2 - 19 - 10

Required idenifying information.

Contract No.: NXXXX-XX-X-XXXX
Job Location: Anytown, US
Crane Serial No.: XX-XXXX

Certification of Loss of Power Test - CDRL – XXXX

Dear NAVCRANECEN,

A sudden loss of power to the crane such as an emergency stop condition will not have detrimental effects to the crane.

Jane Smith

Jane Smith
Vice President

Required signature of responsible person.

123 Crane Center Way, Portsmouth, VA 23709
Phone (555) 123-4567 Fax (555) 123-5678

U. Coupling Alignments Certificate

Please see the following pages for sample Coupling Alignment Certificates.

Standard Shaft Alignment Record

Contract Number: _____ Crane Manufacturer: _____

Crane Capacity: _____ Crane Serial Number: _____

Job Location: _____ CDRL: _____

Shaft/Coupling Alignment Data Sheet

Required identifying information.

Equipment (check one): ☐ Main Hoist Drive ☐ Aux Hoist Drive

Coupling Manufacture: _____

Coupling Type: _____ Coupling Size: _____

Manufacturer Maximum Allowable Misalignment: Parallel: _____ (in.) Angular: _____ (in.)

Alignment Method: _____

A. Machine Setup:

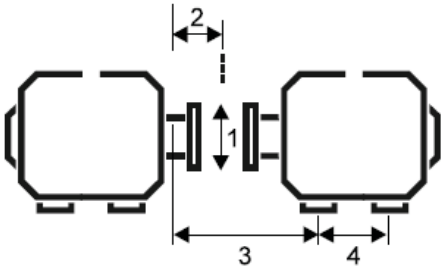

1. _____ in.
2. _____ in.
3. _____ in.
4. _____ in.

B. Coupling Alignment Record:

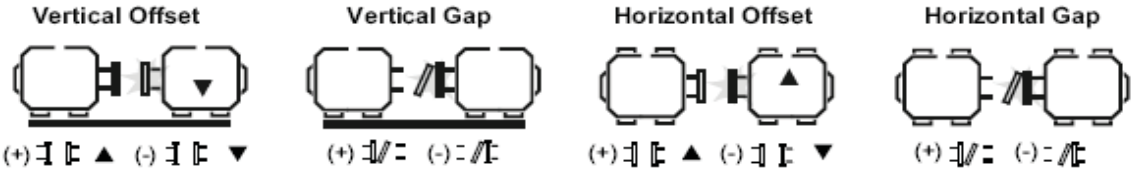

Actual: _____ _____ _____ _____

C. Soft Foot Correction (Shimming) Record:

☐ NA (maximum 0.001″ allowable)

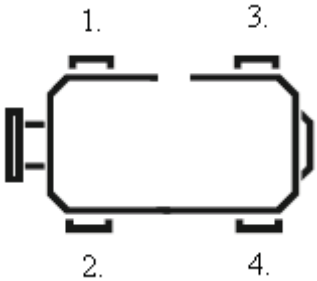

1. _____ in.
2. _____ in.
3. _____ in.
4. _____ in.

Required signature of responsible person.

Alignment Verified by: _____ Date: _____

Navy Crane Center Form 09-001 Coupling Data Sheet (July 2009)

Shipyard Shaft Alignment Record

Contract Number: _____ Crane Manufacturer: _____

Crane Capacity: _____ Crane Serial Number: _____

Job Location: _____ CDRL: _____

Required identifying information.

Shaft/Coupling Alignment Data Sheet

Equipment (check one): ☐ Main Hoist Drive ☐ Aux Hoist Drive

Coupling Manufacturer: _____

Coupling Type:_____ Coupling Size: _____

Manufacturer Maximum Allowable Misalignment: Parallel: _____ (in.) Angular: _____ (in.)

Alignment Method: _____

A. Machine Setup:

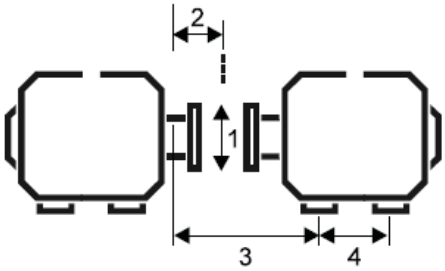

1. _____ in.
2. _____ in.
3. _____ in.
4. _____ in.

B. Coupling Alignment Record:

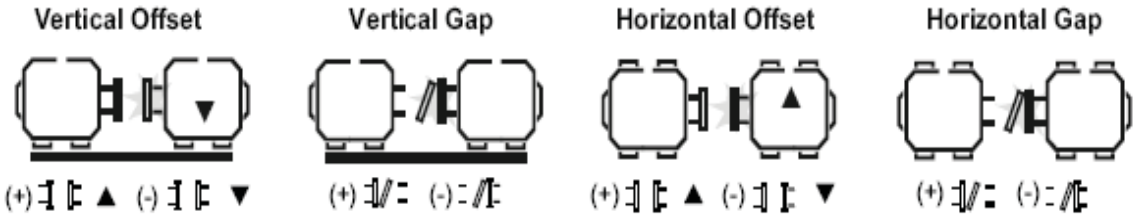

Actual: _____ _____ _____ _____

Required signature of responsible person.

Alignment Verified by: _____ Date: _____

Navy Crane Center Form 09-001 Coupling Data Sheet (July 2009) Page 1 of 2

Contract Number: _____ Crane Manufacturer: _____

Crane Capacity: _____ Crane Serial Number: _____

Job Location: _____ CDRL: _____

C. Hold Down Bolt – Torque Values

Driver			Driven		
Bolt #	Bolt Size	Torque value	Bolt #	Bolt Size	Torque Value
1			5		
2			6		
3			7		
4			8		

Shims: Start with 0.100" under each foot. Remove any carbon steel, brass, cracked, bent, folded, rusted, hand cut or otherwise defective shims. No more than three shims should be placed under each foot, unless correcting for soft foot.

D. Soft Foot Correction (Shimming) Record:

☐ NA (maximum 0.001″ allowable)

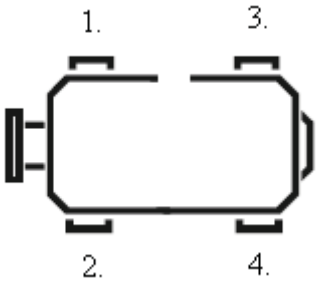

1. _____ in.
2. _____ in.
3. _____ in.
4. _____ in.

Alignment Verified by: _____ Date: _____

V. Hook Proof Test Certificate

Please see the following page for a sample Hook Proof Test Certificate.

International Hook Corp.

April 30, 2010

Crane Parts Manufacturers
123 Crane Center Way
Portsmouth, VA 23709

INSPECTION REPORT

Contract No.: NXXXX-XX-X-XXXX
Job Loacation: Facility, Anytown, US
Crane Serial No.: XX-XXXX
CDRL: XXXX

Required identifying information.

On April 23, 2010, International Hook Corp.'s Physical Testing Department received one (1) 20 ton crane hook and nut assembly identified as S/N 095030 H & N for proof load testing per ASME B30.10-2005 at two (2) times the rated load. The samples were tested using our Baldwin 300,000 pound testing machine NDT Control 332.

Required statement that testing meets ASME B30.10.

Following are the results:

Sample ID	Rated Load Pounds	Proof Load Pounds	Hold Time Min.	Initial Throat Measurement Inches	After Proof Load – Inches	Comments
095030 H & N	40,000	80,000	10	6.56	6.57	No Visible Damage
Intake Throat Opening = 6.56". Final Throat Opening = 6.57"						

Required information: Test load Test duration Lack of deformation

Jean-Pierre Vincent
Jean-Pierre Vincent
Laboratory Supervisor

Required signature of responsible person.

811 Hook Pkwy
Anytown, US 99999

W. Welding Certification

Please see the following page for a sample welding certification.

Crane Parts Manufacturers

July 16, 2010

Navy Contract No.: NXXXX-XX-X-XXXX
CDRL: XXXX
Crane Serial No.: XX-XXXX
Crane Location: Navy Facility, Anytown, US

Required identifying information.

WELDING CERTIFICATIONS

We certify that all welders, welding operators, weld inspector(s) and welding procedure (qualification) meet the requirements of AWS D 14.1 for all work performed in manufacturing this crane.

We certify that all welders, welding operators, weld inspector(s), and welding procedure (qualification) meet the requirements of AWS D 1.1 and for all work performed in installing/welding parts supporting the crane at/to building interfaces.

Statements of meeting required standards.

Jane Smith
Jane Smith
Vice President

07/12/2010
Date

Required signature of responsible person.

123 Crane Center Way, Portsmouth, VA 23709
Phone (555) 123-4567 Fax (555) 123-5678

X. PE Design Review Certificate

Please see the following page for a sample letter from a Professional Engineer regarding design review of drawings.

Jenny Jones
Professional Engineer

May 25, 2010

Crane Parts Manufacturers
123 Crane Center Way
Portsmouth, VA 23709

Attn: Jane Smith

Subject: NCC Job # NXXXX-XX-X-XXXX
Job Location: Anytown, US
Crane Serial #: XX-XXXX
CDRL: XXXX

Required identifying information.

This letter is to certify that I have reviewed drawings D3458 – D3472. I believe these documents follow sound practices consistent with standard engineering and design methods.

Required statement of review.

Jenny Jones

Jenny Jones
Registered Professional Engineer
State of Virginia
License No. XXXXXX

Required signature and licensure information.

123 PE Pkwy
Portsmouth, VA 23709

Phone: 555-899-1010
Fax: 555-899-1011
Email: jjones@eng.net

Y. Hoist Machinery Certificate

Please find an example of this item on the following page.

Crane Parts Manufacturers

May 25, 2010

Certification of Design

Navy Contract No.: NXXXXX-XX-X-XXXX DO XXXX

Subject: One 15 Metric Ton Hoist Brakes Certification
Shipyard ABC, Norfolk, VA
Ref. Crane #28
Crane Serial #: XX-XXXX
CDRL: XXXX

Required identifying information.

Crane Parts Manufacturers (CPM) will certify that the hoist machinery is capable of withstanding the simultaneous setting of both hoist brakes with or without load.

Required statement that hoist machinery meets requirements.

Sincerely,

Bill Smith

Bill Smith
Quality Assurance Manager

Required signature of responsible person.

123 Crane Center Way, Portsmouth, VA 23709
Phone (555) 123-4567 Fax (555) 123-5678

Z. Crane Installation Plan

Please see the following pages for a sample crane installation plan.

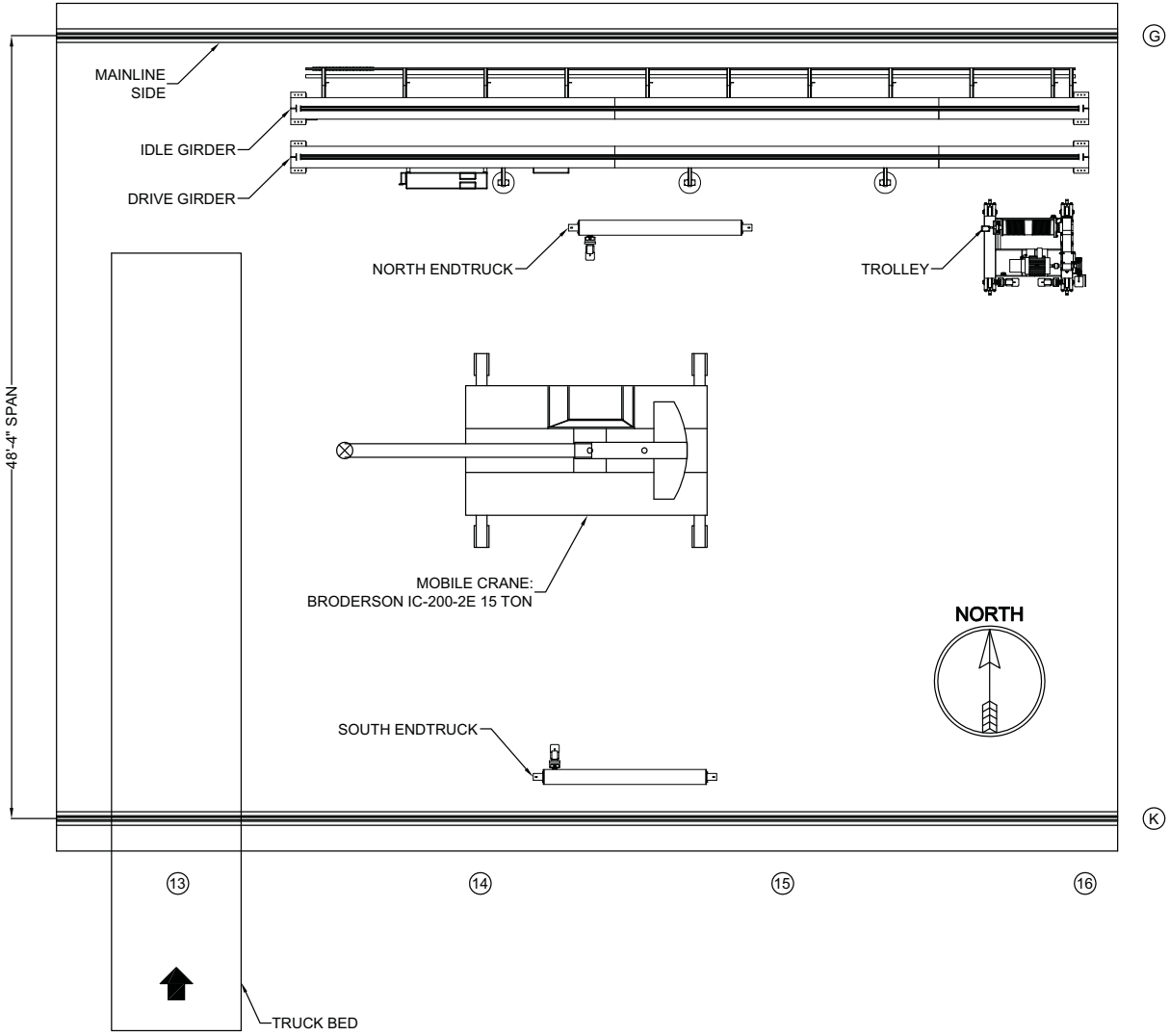

PREFACE:

BEFORE ANY WORK IS PERFORMED, CRANE CONTRACTOR WILL BRIEF ALL WORKERS ON THE MANDATORY SITE SAFETY PLAN AND REGULATIONS. THIS WILL INCLUDE, BUT NOT BE LIMITED TO:

- EMERGENCY EXITS AND ROUTES
- PROPER SAFETY GEAR (PPE)
- WORK AREA (MARKING AREAS AS NEEDED)
- OPERATION OF EQUIPMENT
- REVIEW OF SITE SAFETY REGULATIONS AND RESPONSIBILITIES

- THIS PLAN SHALL DISCUSS AND LAY OUT THE WORK NECESSARY TO INSTALL (1) 10 TON CRANE.

- THE LIFT DIRECTOR SHALL ISSUE ALL INSTRUCTIONS TO THE WORKERS AND OPERATORS USING BOTH VERBAL AND HAND SIGNALS AS IS NECESSARY. THE SPEED OF THE EQUIPMENT SHALL BE WHAT IS PRACTICAL TO ENSURE A MINIMUM OF SWING AND SHIFTING OF THE LOAD BEING HANDLED. THE USE OF GUIDE ROPES AND THEIR PLACEMENT SHALL BE AT THE LIFT DIRECTORS DISCRETION PER THE DETAILED LIFT PLAN. IF THERE IS CAUSE FOR MODIFICATION OF THE APPROVED LIFT PLAN, NCC CONCURRENCE SHALL BE REQUIRED BEFORE COMMENCING WORK.

- BEFORE ANY WORK BEGINS, THE LIFT DIRECTOR SHALL REVIEW AND ENFORCE THE SUPPLIED APP ELECTRICAL TAGOUT AND CLEARANCE PROCEDURES, AS WELL AS THE LOCAL FACILITY TAGOUT AND CLEARANCE PROCEDURES. THE SHUT-DOWN OF CRANE RUNWAY ELECTRIFICATION SHALL BE COORDINATED WITH FACILITY PERSONNEL.

MATERIAL LIST:

* THIS LIST SHALL BE MODIFIED AS NEW EQUIPMENT NEEDS BECOME KNOWN

(1) - BRODERSON IC-200-2E 15 TON OR EQUAL
(4) - 10,000 LB SWIVEL HOIST RING (TORQUE = 230 FT-LBS)
(1) - 15,000 LB SWIVEL HOIST RING (TORQUE = 470 FT-LBS)
(2) - Ø3/8" GR.100 X 12' CHAIN W/ GRAB HOOKS
(2) - 3 TON LEVER HOIST (MINIMUM OF 2 PCS)
(1) - GANGBOX W/ VARIOUS HANDTOOLS AND RIGGING EQUIPMENT

IDLE GIRDER: 8,722 LBS
(INCLUDES 119 LBS OF RIGGING)

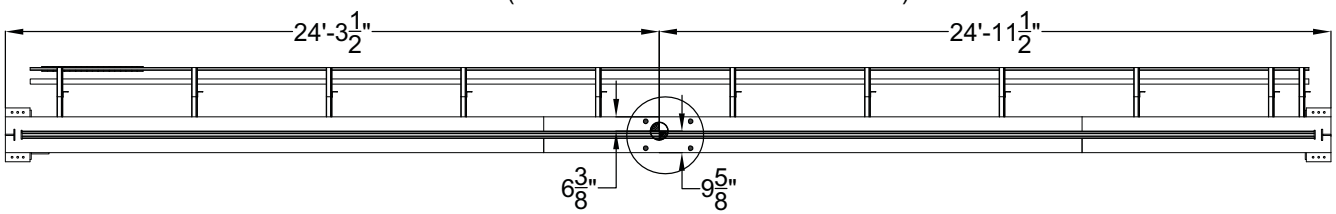

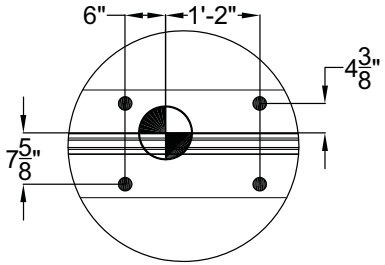

DRIVE GIRDER: 8,414 LBS
(INCLUDES 119 LBS OF RIGGING)

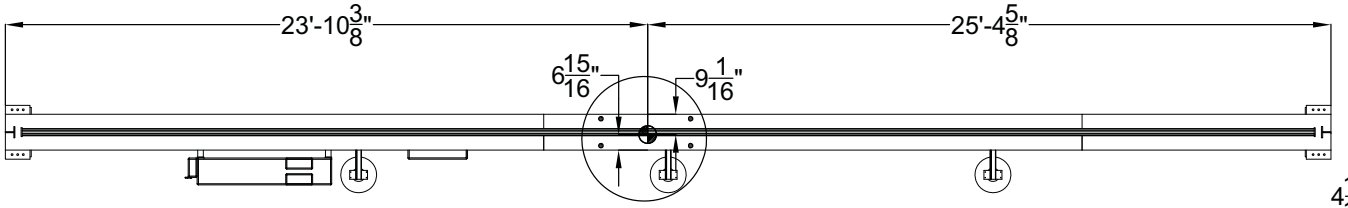

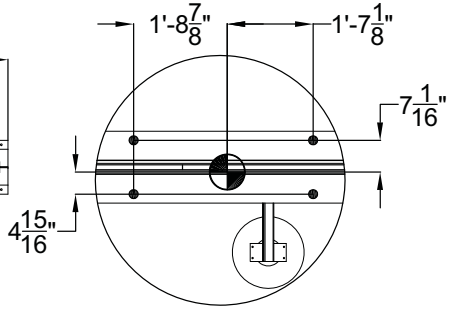

• LIFTING POINTS

⊕ CENTER OF GRAVITY

BRIDGE ENDTRUCK: 1,602 LBS
(INCLUDES 20 LBS OF RIGGING)

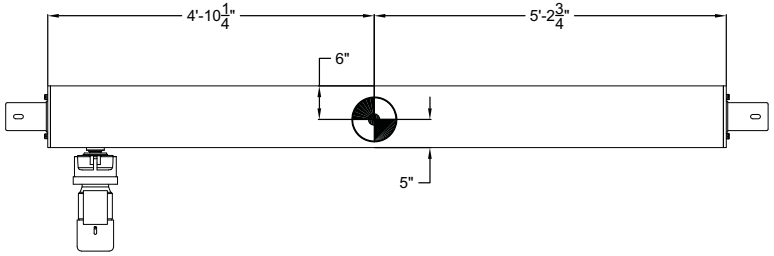

LIFTING POINTS

CENTER OF GRAVITY

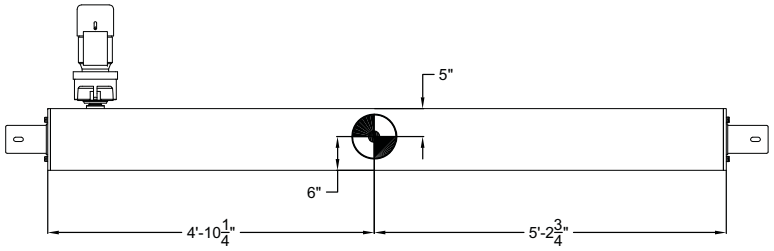

BRIDGE ENDTRUCK: 1,602 LBS
(INCLUDES 20 LBS OF RIGGING)

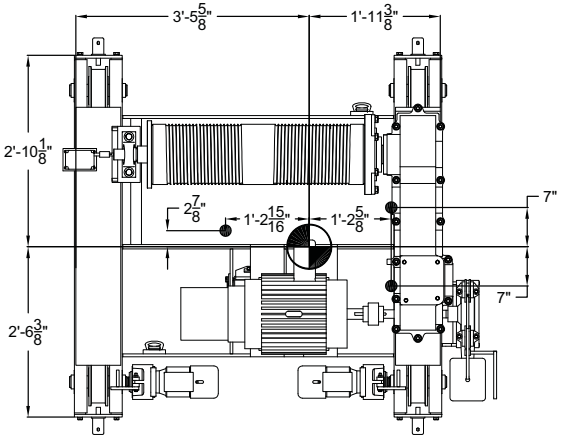

TROLLEY: 3,457 LBS
(INCLUDES 100 LBS OF RIGGING)

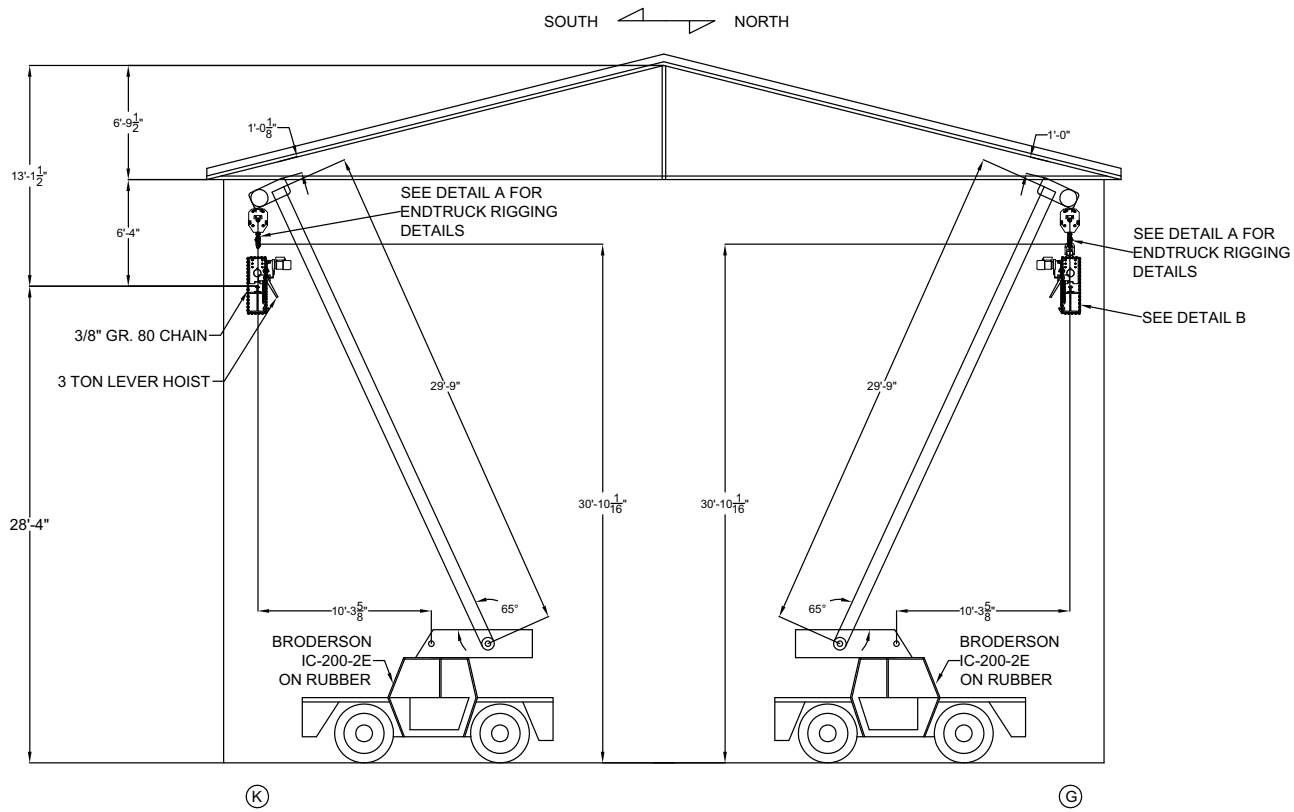

INSTRUCTIONS

1) The lift director shall instruct the mobile crane operator to position the equipment as shown in the plan details. Crane boom must be located between trusses before proceeding.

2) The lift director shall direct the workers to install the rigging on the first endtruck as shown in the plan Detail A.

3) The crane operator shall maneuver the block over the rigging. The workers shall attach the rigging to the mobile crane as shown in the plan details.

4) The operator shall raise the endtruck to the runway level while maintaining clearance with trusses and other obstructions. The workers shall use guide ropes during this process to control the motion of the endtruck while being lifted. The quantity and placement of the guide ropes shall be at the lift director's discretion.

5) The operator shall maneuver the endtruck over the runway. Once the bridge wheels are aligned with the runway rail, the operator shall slowly lower the endtruck until it is resting on the runway rail.

6) Once the load is resting on the rail, the workers shall secure the endtruck to the runway using a lever hoist and angle as shown in detail B. When secure, remove the rigging to the mobile crane. The operator shall return the mobile crane to floor level for and prepare for the next pick.

7) Repeat steps 1-6 for the second endtruck.

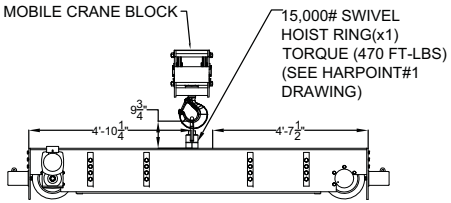

DETAIL A

MAX LIFTED LOAD

- MAX LIFTED LOAD BASED ON CONFIGURATIONS / LIMITS FOR BRODERSON IC-200-2E:
  - 30' BOOM
  - 12 FT LOAD RADIUS
  - 65° BOOM ANGLE
  - MAX LIFTED LOAD ON RUBBER 8,100 LBS

- MAX LIFTED LOAD BASED ON RIGGING CONFIGURATION
  - 15,000# HOIST RING: 15,000 LBS MAX LIFTED LOAD

- ENDTRUCK WEIGHT **MUST** BE UNDER THE 8,100 LB LIMIT BEFORE PROCEEDING WITH FULL LIFT

- ENDTRUCK WEIGHT (INCLUDING RIGGING) - 1,602 LBS

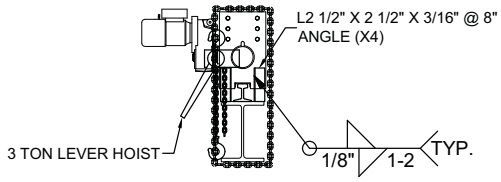

DETAIL B

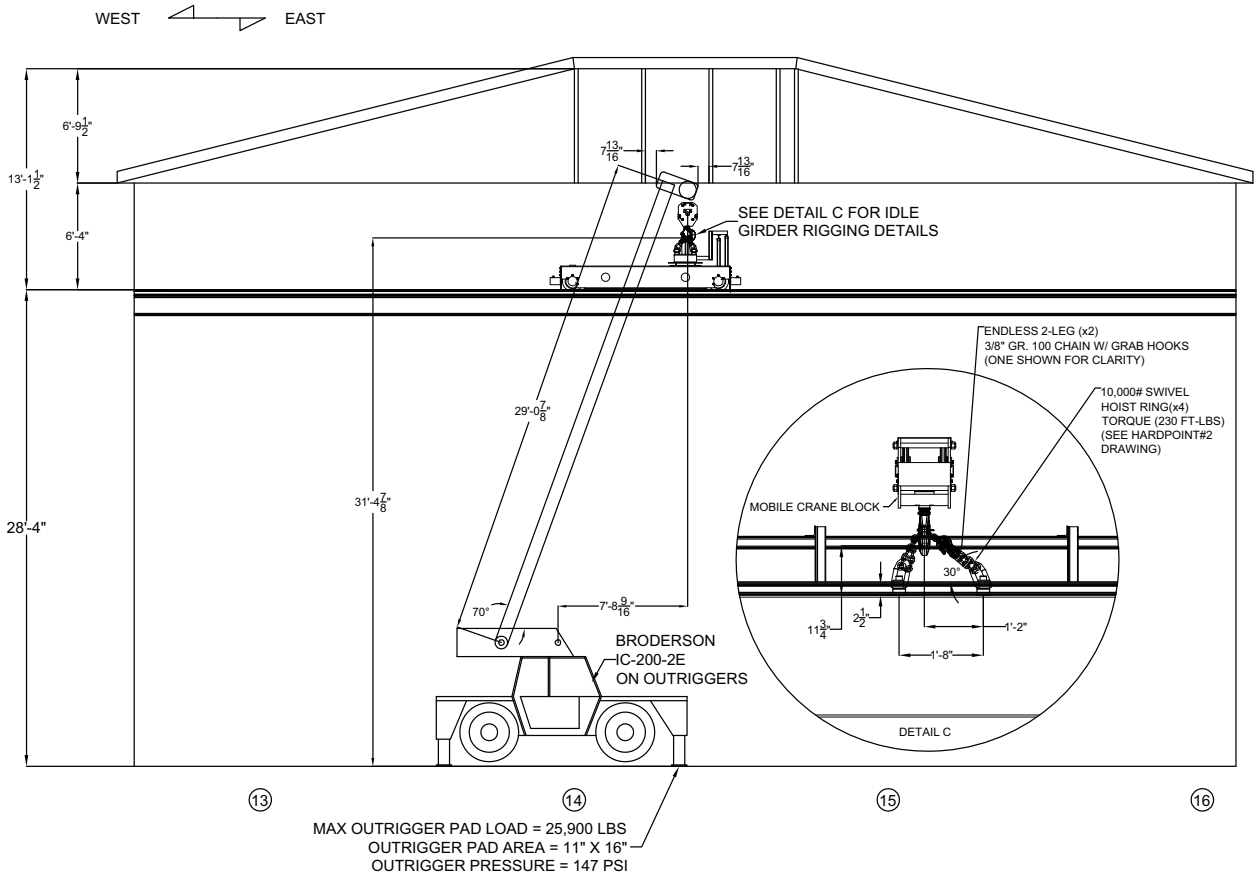

INSTRUCTIONS

8) The lift director shall instruct the mobile crane operator to position the equipment as shown in the plan Detail C.

9) The lift director shall direct the workers to install the rigging on the idle girder as shown in the plan details. The rigging shall be installed such that the chain is not bound up on itself or caught on any other obstacles. Verify that the chain does not have any twists before proceeding.

10) The crane operator shall maneuver the block over the rigging. The workers shall attach the rigging to the mobile crane as shown in the plan details.

11) Once the rigging is set, the lift director shall perform a test pick. If the lift is deemed to be unsatisfactory, the lift director shall instruct the operator to lower the idle girder back to floor level.

12) The lift director shall perform test picks and re-adjustments of the rigging until a satisfactory pick is achieved. A satisfactory pick is when one end of the girder does not dip down more than one foot from level.

13) Once the pick is satisfactory, the operator shall raise the idle girder to the runway level. The workers shall use guide ropes during this process to control the motion of the idle girder while being lifted. The quantity and placement of the guide ropes shall be at the lift director's discretion.

14) The operator shall maneuver the idle girder over the endtrucks. Once the girder is positioned over the endtrucks, the operator shall slowly lower the idle girder until it is resting on the endtrucks.

15) Once the load is resting on the endtrucks, the workers shall secure the idle girder to the endtrucks. Remove the rigging from the idle girder, lever hoist and angle from endtrucks. The operator shall return the mobile crane to floor level for and prepare for the next pick.

MAX LIFTED LOAD

- MAX LIFTED LOAD BASED ON CONFIGURATIONS / LIMITS FOR BRODERSON IC-200-2E:
  - 30' BOOM
  - 8 FT LOAD RADIUS
  - 70° BOOM ANGLE
  - MAX LIFTED LOAD ON OUTRIGGERS 24,000 LBS

- MAX LIFTED LOAD BASED ON RIGGING CONFIGURATION
  - USING Ø3/8" GR. 100 LIFTING CHAIN: 14,098 LBS MAX LIFTED LOAD

- IDLE GIRDER WEIGHT **MUST** BE UNDER THE 14,098 LB LIMIT BEFORE PROCEEDING WITH FULL LIFT

- IDLE GIRDER WEIGHT (INCLUDING RIGGING) - 8,722 LBS

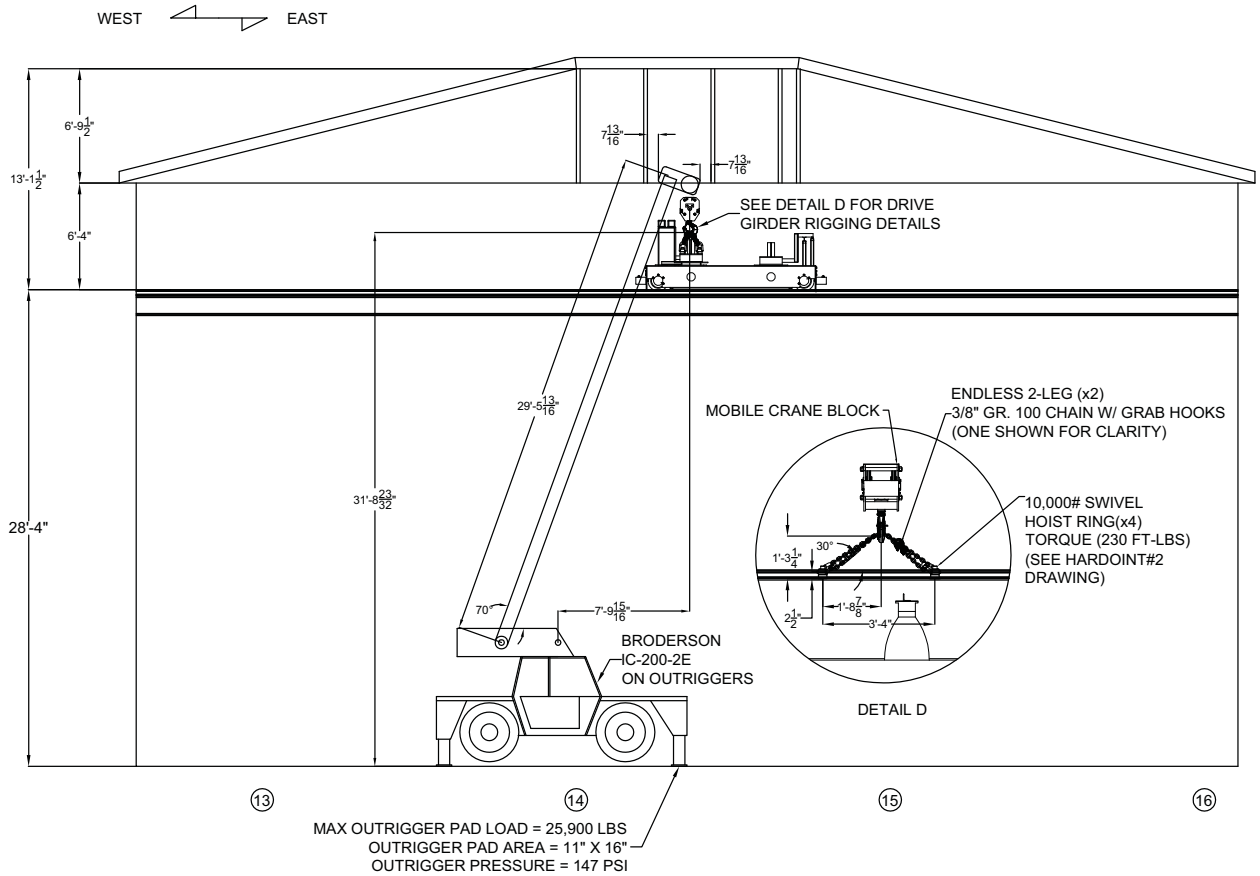

MAX LIFTED LOAD

- MAX LIFTED LOAD BASED ON CONFIGURATIONS / LIMITS FOR BRODERSON IC-200-2E:
  - 30' BOOM
  - 8 FT LOAD RADIUS
  - 70° BOOM ANGLE
  - MAX LIFTED LOAD ON OUTRIGGERS 24,000 LBS

- MAX LIFTED LOAD BASED ON RIGGING CONFIGURATION
  - USING Ø3/8" GR. 100 LIFTING CHAIN: 12,688 LBS MAX LIFTED LOAD

- DRIVE GIRDER WEIGHT **MUST** BE UNDER THE 12,688 LB LIMIT BEFORE PROCEEDING WITH FULL LIFT

- DRIVE GIRDER WEIGHT (INCLUDING RIGGING) - 8,414 LBS

INSTRUCTIONS

16) The lift director shall instruct the mobile crane operator to position the equipment as shown in the plan Detail D.

17) The lift director shall direct the workers to install the rigging on the drive girder as shown in the plan details. The rigging shall be installed such that the chain is not bound up on itself or caught on any other obstacles. Verify that the chain does not have any twists before proceeding.

18) The crane operator shall maneuver the block over the rigging. The workers shall attach the rigging to the mobile crane as shown in the plan details.

19) Once the rigging is set, the lift director shall perform a test pick. If the lift is deemed to be unsatisfactory, the lift director shall instruct the operator to lower the drive girder back to floor level.

20) The lift director shall perform test picks and re-adjustments of the rigging until a satisfactory pick is achieved. A satisfactory pick is when one end of the girder does not dip down more than one foot from level.

21) Once the pick is satisfactory, the operator shall raise the drive girder to the runway level. The workers shall use guide ropes during this process to control the motion of the drive girder while being lifted. The quantity and placement of the guide ropes shall be at the lift director's discretion.

22) The operator shall maneuver the drive girder over the endtrucks. Once the girder is positioned over the endtrucks, the operator shall slowly lower the drive girder until it is resting on the endtrucks.

23) Once the load is resting on the endtrucks, the workers shall secure the drive girder to the endtrucks and remove the rigging. The operator shall return the mobile crane to floor level for and prepare for the next pick.

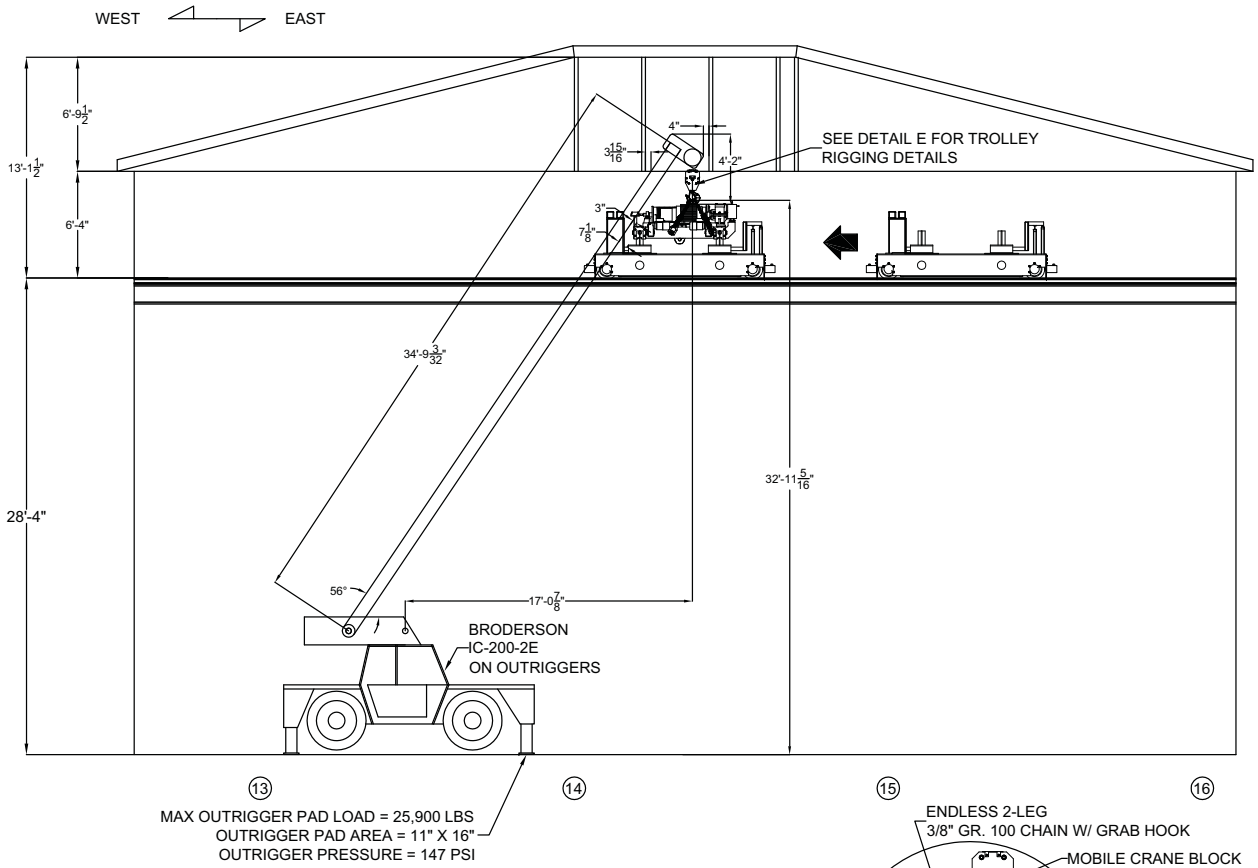

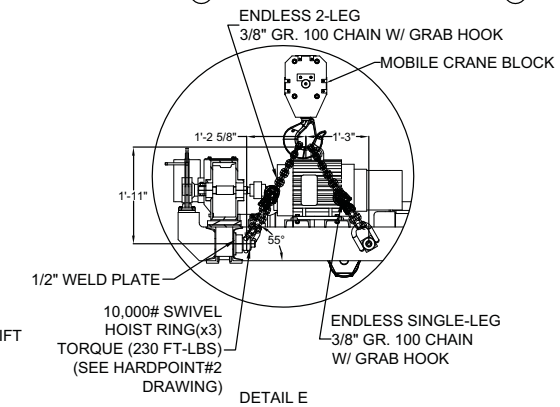

DETAIL E

MAX LIFTED LOAD

- MAX LIFTED LOAD BASED ON CONFIGURATIONS / LIMITS FOR BRODERSON IC-200-2E:
  - 35' BOOM
  - 18 FT LOAD RADIUS
  - 56° BOOM ANGLE
  - MAX LIFTED LOAD ON OUTRIGGERS 10,000 LBS

- MAX LIFTED LOAD BASED ON RIGGING CONFIGURATION
  - USING Ø3/8" GR. 100 LIFTING CHAIN: 8,996 LBS MAX LIFTED LOAD

- TROLLEY WEIGHT **MUST** BE UNDER THE 8,996 LB LIMIT BEFORE PROCEEDING WITH FULL LIFT

- TROLLEY WEIGHT (INCLUDING RIGGING) - 3,457 LBS

INSTRUCTIONS

24) The lift director shall instruct the mobile crane operator to position the equipment as shown in the plan Detail E.

25) The lift director shall direct the workers to install the rigging on the trolley as shown in the plan details. The rigging shall be installed such that the chain is not bound up on itself or caught on any other obstacles. Verify that the chain does not have any twists before proceeding.

26) The crane operator shall maneuver the block over the rigging. The workers shall attach the rigging to the mobile crane as shown in the plan details.

27) Once the rigging is set, the lift director shall perform a test pick. If the lift is deemed to be unsatisfactory, the lift director shall instruct the operator to lower the trolley back to floor level.

28) The lift director shall perform test picks and re-adjustments of the rigging until a satisfactory pick is achieved. A satisfactory pick is when the trolley is 5 degrees or less from level.

29) Once the pick is satisfactory, the operator shall raise the trolley to the runway level. The workers shall use guide ropes during this process to control the motion of the trolley while being lifted. The quantity and placement of the guide ropes shall be at the lift director's discretion.

30) The operator shall raise the trolley over the height of the girders. Bridge brakes will be released. Bridge will then be carefully rolled under resting trolley. Once the trolley is positioned over the girder rails, the operator shall slowly lower the trolley until it is resting on the girder rails.

31) Once the Trolley is resting on the girder rails, the workers shall remove the rigging. The operator shall return the mobile crane to floor level.

IC-200-2E Preliminary Information

1. Endtrucks
2. Idle Girder
3. Drive Girder
4. Trolley

	LOAD RADIUS FEET	CAPACITIES APPLY TO OPERATION ON FIRM LEVEL SURFACE MAIN BOOM OR EXTENSION CAPACITIES IN POUNDS 360° ROTATION ON RUBBER	ON OUTRIGGERS	OVER FRONT ON RUBBER	ON OUTRIGGERS
MAIN BOOM	6	16200	30000	17000	30000
	8	13200	2. 24000 3.	13800	24000
	10	11000	19800	11500	19800
	12	1. 8100	16100	9600	16100
	14	6250	13500	7900	13500
	16	5000	11200	6300	11200
	18	4100	4. 10000	5100	10000
	20	3400	8800	4300	8800
	22	2850	7700	3600	7800
	24	2400	6600	3000	6900
	26	2100	5750	2600	6200
	28	1850	5150	2300	5700
	30	1650	4650	2100	5300
	32	1450	4200	1850	4900
	36	1150	3400	1500	4200
15' BOOM EXT.	40	900	3050	1200	3600
	44	650	2600	950	3100
	48	450	2200	750	2700
	51	250	1900	600	2400

BOOM EXTENSION ANGLE	15-FOOT BOOM EXTENSION - STRAIGHT OR OFFSET MAIN BOOM ANGLE 0°	15°	30°	40°	50°	60°	70°
0°	---	3100	3450	3900	4650	6000	7500
15°	---	3000	3100	3300	3650	4250	5200
30°	---	---	3000	3050	3200	3450	3900

CAUTION BOOM EXTENSION LOADS MUST NOT EXCEED MAIN BOOM CAPACITY.
BOOM EXTENSION MAY ONLY CARRY LOADS WITH OUTRIGGERS DOWN.

BOOM EXTENSION DEDUCT: 400 POUNDS WHEN STOWED ON BASE BOOM.
800 POUNDS IN WORK POSITION WITH LOAD ON MAIN BOOM.

USE SINGLE PART LOAD LINE FOR LOADS TO 7500 LBS. (WT. 125 LBS.) 45"

USE TWO PART LOAD LINE FOR LOADS TO 15000 LBS. (WT. 124 LBS.) 50"

USE FOUR PART LOAD LINE FOR LOADS TO 30000 LBS. (WT. 210 LBS.) 52"

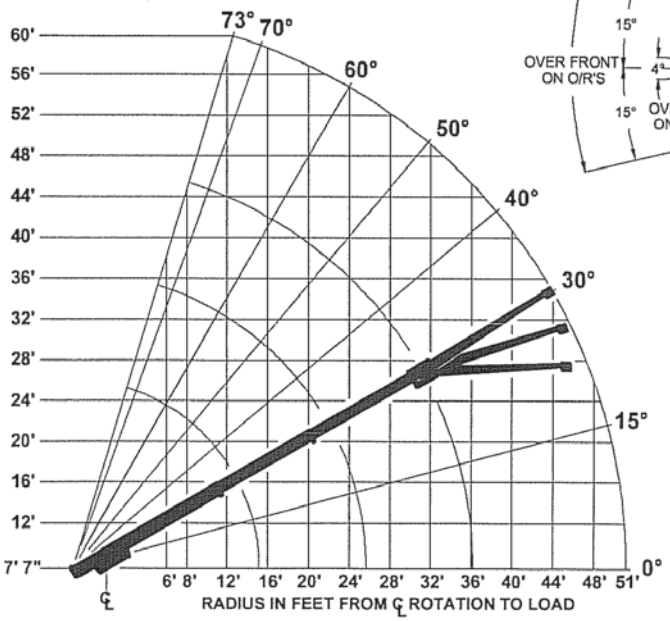

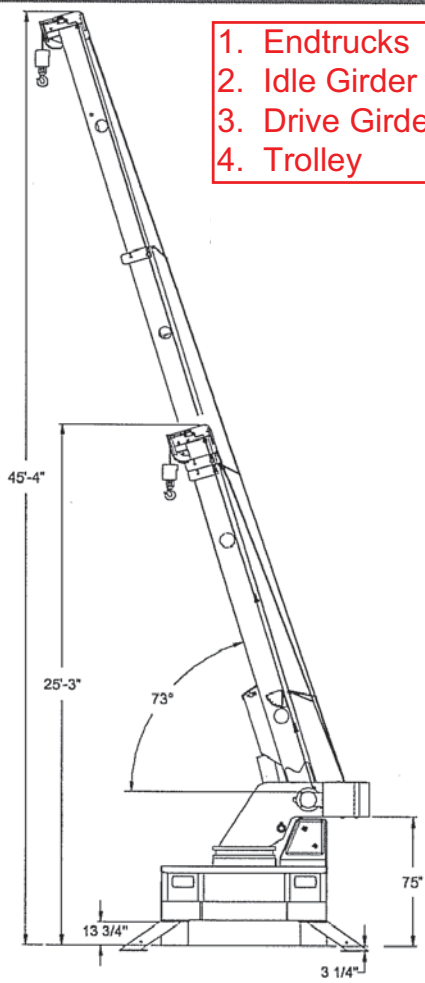

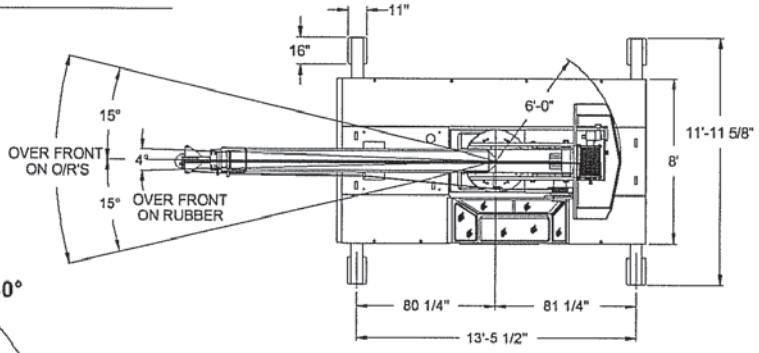

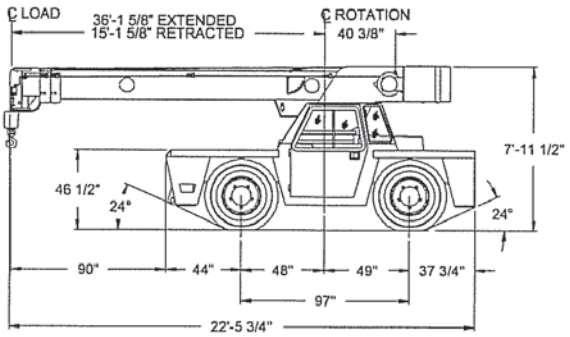

Max Outrigger Load

Outrigger Load Tables

MAXIMUM OUTRIGGER LOADS						
CRANE MODEL	TYPICAL CRANE WEIGHT (POUNDS)	MAXIMUM CONDITION LOAD (POUNDS)	MAXIMUM CONDITION RADIUS (FEET)	MAXIMUM OUTRIGGER PAD LOAD (POUNDS)	PAD SIZE (INCHES)	GROUI PRESSU (PSI)
IC-20-1B, 1C, 1D	6300	5000	4	6620	6 x 6.5	170
IC-20-1E,1F	6400	5000	4	7250	6 x 6.5	186
IC-35-2	7700	8000	4	7620	6 x 8	159
IC-40-2	8800	2850	12	7500	6 x 8	156
IC-80-1	16900	17000	5	15030	9 x 12	139
IC-80-2	17100	17000	5	15120	9 x 12	140
IC-80-3	17500	17000	5	15270	9 x 12	141
IC-200-1	28400	20000	10	25790	11 x 16	147
IC-200-2	28900	19800	10	25900	11 x 16	147
IC-200-3	31300	30000	6	26150	11 x 16	149
IC-250-3 OUT & DOWN	38600	13500	20	31020	9 x 9	383
IC-250-3 IN & DOWN	38600	25050	8	31370	9 x 9	387
RT-200-3	30900	30000	6	27780	12 x 16	145
RT-300-2	45300	25950	14	40440	16 x 17	149

OUTRIGGER LOAD EXAMPLES AT 10 FOOT LOAD RADIUS				
CRANE MODEL	RATED 360° LOAD @10 FT LOAD RADIUS	OUTRIGGER LOAD @RATED LOAD @10 FT RADIUS	OUTRIGGER LOAD @1/2 RATED LOAD @10 FT RADIUS	OUTRIGGER L W/EMPTY HOOI FT RADIUS

Maximum Work Load of Various Chain Sling Applications

Design Factor		1-leg-Slings	2-leg-slings			3-leg slings and 4-leg slings			
4:1						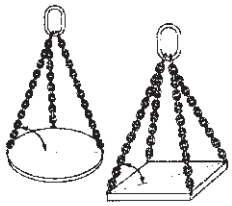			
Angle		90 degrees	60 degrees	45 degrees	30 degrees	60 degrees	45 degrees	30 degrees	
Load Factor		1	1.7	1.4	1	2.6	2.1	1.5	
Grade 120 Alloy									**Temperature Limitations**
Ni 720	9/32"	5200	9000	7400	5200	13500	11000	7800	Retains 100% of work load limit at minus 40-400 degrees F. Not for temperatures over 400 degrees F.
Ni 1020	3/8"	10600	18400	15000	10600	27500	22500	15900	
Ni 1320	1/2"	17900	31000	25300	17900	46500	38000	26900	
Grade 100 Alloy									
Ni 5.50	7/32"	2700	4700	3800	2700	7000	5700	4000	Retains 100% of work load limit at minus 40-400 degrees F. Not for temperatures over 400 degrees F.
Ni 70	9/32"	4300	7400	6100	4300	11200	9100	6400	
Ni 80	5/16"	5700	9900	8100	5700	14800	12100	8500	
Ni 100	3/8"	8800	15200	12400	8800	22900	18700	13200	Special G100 750 F chain for elevated temperature available. Call for details
Ni 130	1/2"	15000	26000	21200	15000	39000	31800	22500	
Ni 160	5/8"	22600	39100	32000	22600	58700	47900	33900	
Ni 200	3/4"	35300	61100	49900	35300	91700	74900	53000	
Ni 220	7/8"	42700	74000	60400	42700	110900	90600	64000	
Ni 260	1"	59700	103400	84400	59700	155100	126600	89550	
Grade 80 Alloy									
Ni 5.5	7/32"	2100	3600	3000	2100	5500	4400	3200	Retains 100% of work load limit at minus 40-400 degrees F, 90% at 400-570 degrees F, and 75% at 570-750 degrees F. Not for temperatures over 750 degrees F.
Ni 7	9/32"	3500	6100	4900	3500	9100	7400	5200	
Ni 8	5/16"	4500	7800	6400	4500	11700	9500	6800	
Ni 10	3/8"	7100	12300	10000	7100	18400	15100	10600	
Ni 13	1/2"	12000	20800	17000	12000	31200	25500	18000	
Ni 16	5/8"	18100	31300	25600	18100	47000	38400	27100	
Ni 20	3/4"	28300	49000	40000	28300	73500	60000	42400	
Ni 22	7/8"	34200	59200	48400	34200	88900	72500	51300	
Ni 26	1"	47700	82600	67400	47700	123900	101200	71500	
Ni 32	1-1/4	72300	125200	102200	72300	187800	153400	108400	
Grade 50 Stainless Steel									
Nik 5	3/16"	1100	1900	1600	1100	2900	2300	1700	Retains 100% of work load limit at minus 50-750 degrees F, 75% at 750-1100 degrees F, and 50% at 1100-1290 degrees F, not for temperatures over 1290 degrees F.
Nik7	9/32"	2200	3800	3100	2200	5700	4600	3300	
Nik 10	3/8"	4400	7500	6200	4400	11500	9300	6600	
Nik 13	1/2"	7100	12100	10000	7100	18500	14900	10700	
*Nik 16	5/8"	11000	18700	15600	11000	23100	23100	16500	

*Sling work load limits are reduced 10% when the HSK16 eye sling hook is used.

Identification & Testing

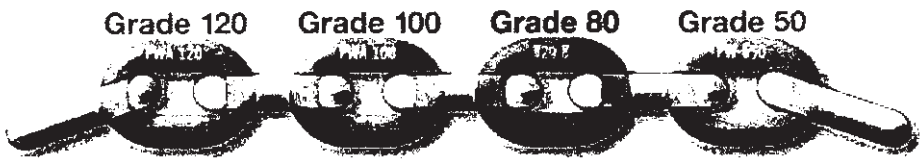

[redacted] lifting chain and fitings are marked with a batch identification number and the manfaturer's identifcation marking: the number "120" or "12" to indicate Grade 120 Alloy, "100", "10" or "V" to indicate Grade 100 Alloy, "8" to indicate Grade 80 Alloy and "50" to indicate grade 50 Stainless.

All Alloy chains are 100% tested to 2 times the working load values and are furnished with a test certificate to this effect.

Every chain sling manufactured by [redacted] is supplied with a steel tag and test certificate as shown.

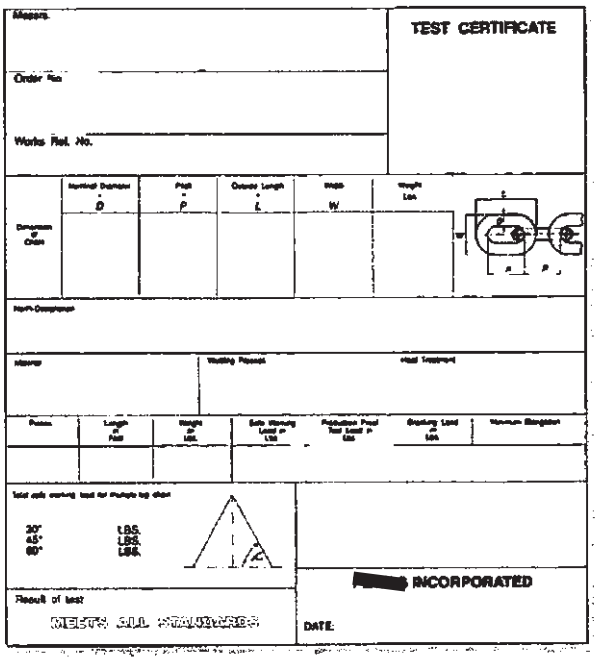

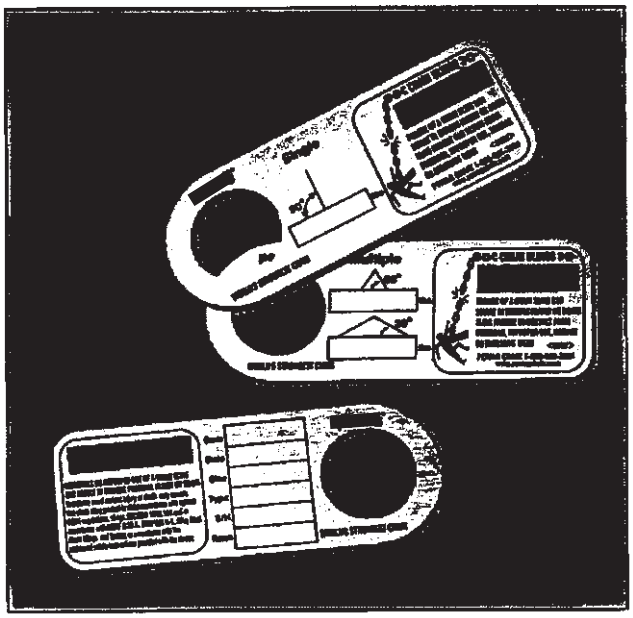

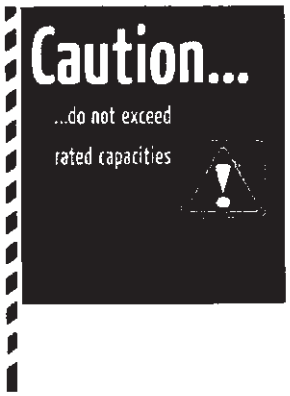

Reduction Factors

To be used for various slinging methods and conditions without shock loads.

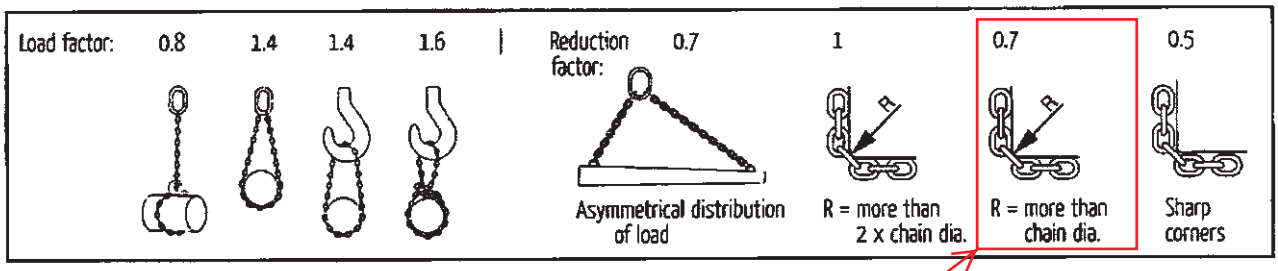

8800 lbs x 0.7 = 6160 lbs

Heavy Duty® Hoist Rings

Material: Forged alloy steel with minimum tensile strength of 180,000 psi.

Design Factor: Minimum Safety Factor = 5:1, 100% magnetic particle inspected, Hoist Rings retain the same rated load from 0 to 90 degrees from the bolt axis

Range of Movement: Pivot 180°, Swivel 360°

Specifications: Meets Military Specification No. MIL-STD 209C, Meets ANSI/ASME B30.26

Finish: Black Oxide Finish for corrosion resistance, * Also available in a wide range of plating - e.g Cadmium, Titanium-Cadmium, Nickel, etc.

Typical Applications: ADB's HEAVY DUTY® Hoist Rings are specified and used in nuclear energy equipment

Patent: #4,570,987***, #4,641,986***, #5,405,210, Other Patents Pending

All dimensions approximate variations do not effect use or design factor.

Safety Instructions

Click Image to Enlarge

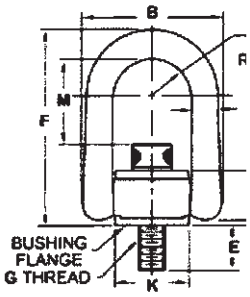

Heavy Duty® Hoist Rings

Part No.	Rated Load (lbs)	A	B	C	D	E	F	G	K	L	M	TL *ft-lbs	WT. lbs.
33101	8000	1.40	5.10	2.05	1.00	1.20	7.37	7/8-9	2.81	0.18	3.32	160	7.33
•33161	8000	1.40	5.10	2.05	1.00	1.20	9.00	7/8-9	2.81	0.18	4.82	160	8.06
33105	10000	1.40	5.10	2.05	1.00	1.45	7.37	1" - 8	2.81	0.18	3.20	230	7.57
•33165	10000	1.40	5.10	2.05	1.00	1.45	9.00	1" - 8	2.81	0.18	4.82	230	8.30
33106	10000	1.40	5.10	2.05	1.00	1.20	7.37	1" - 8	2.81	0.18	3.20	230	7.63
•33166	10000	1.40	5.10	2.05	1.00	1.20	9.00	1" - 8	2.81	0.18	4.82	230	8.36
33107	10000	1.40	5.10	2.05	1.00	2.20	7.37	1" - 8	2.81	0.18	3.20	230	7.81
•33167	10000	1.40	5.10	2.05	1.00	2.20	9.00	1" - 8	2.81	0.18	4.2	230	8.54
33402	15000	2.00	6.75	2.87	1.25	1.88	9.22	1 1/4" - 7	3.88	0.18	3.74	470	15.74
33401	15000	2.00	6.75	2.87	1.25	2.63	9.22	1 1/4" - 7	3.88	0.18	3.74	470	16.0
†33420	20000	2.00	6.75	2.87	1.25	2.63	9.22	1 3/8" - 6	3.88	0.32	3.62	670	17.2
33424	24000	2.00	6.75	2.87	1.25	2.63	9.22	1 1/2" - 6	3.88	0.32	3.49	800	18.1
†33427	30000	2.00	6.75	2.87	1.25	2.96	9.22	2-4" - 1/2	3.88	0.32	3.49	800	22.9
†33432	30000	2.00	6.75	2.87	1.25	2.96	9.22	2" - 8	3.88	0.32	3.49	800	22.9

Girders and Trolleys

Bridge endtrucks

† Supplied with stud and nut • Long Bar Models * Recommended Torque Load

For load ranges of 50,000 to 250,000 lbs. refer to our Safety Engineered Hoist Rings.

Heavy Duty® Hoist Rings are completely interchangeable with Safety Engineered Hoist Rings.

*** Patent Expired

Ingress/Egress Route

AA. Accident Prevention Plan

Please see the following pages to find an example of this item.

Following are examples of some of the items required to be included in the Accident Prevention Plan:

- Project Overview
  - Description

Crane Parts Manufacturers

Contract Number: NXXXXX-XX-X-XXXX
Project #: NXXXX-XX-X-XXXXX
Project Description: Procurement of one 50 ton overhead electric travelling crane for Shipyard Facility ABC
Description of Work to be Performed: Offload and Installation of 50 Ton Overhead Electric Traveling Crane
Location: Shipyard Facility ABC, Norfolk, VA

  - Contacts

Crane Parts Manufacturers

Plan Preparer:	**Jim Jones, Safety Manager**	**Office Number: 555-444-3210** **Cell Number: 555-678-9012**
Signature:	*Jim Jones*	
Approved:	**Jane Smith, Vice President**	**Office Number: 555-444-4321** **Cell Number: 555-678-5678**
Signature:	*Jane Smith*	
Concurrence:	**Bill Smith, Quality Assurance**	**Office Number: 555-444-8765** **Cell Number: 555-678-1289**
Signature:	*Bill Smith*	

❖ Responsibilities & Lines of Authority

1. Project Manager
   a. Has the responsibility for the safety and the results that are achieved.
   b. Assigned authority for the implementation of the safety program.
   c. Holds supervisors accountable for a high level of performance.
   d. Measures results of performance.
   e. Approves safety policies formulated by the Safety Committee, staff or others.
   f. Sets the proper example in safety for all employees.
   g. Demands safety adherence and compliance with the Company safety program from all employees and subcontractors.
2. Job Supervisor and Safety Coordinator
   a. Inspects work areas and equipment for compliance with work rules and safety standards.
   b. Conducts daily safety meetings.
   c. Instructs employees on the hazards of the job, how to work safely and according to operating procedures, and on applicable safety and health regulations.
   d. Reports all accidents and injuries promptly ***to NCC or site contact.***
   e. Analyzes all processes, operations and facilities for hazards and changes or eliminates the hazards.
   f. Compliments safe workers in the presence of co-workers.
   g. Sets the proper example for safety by complying with the safety program and displaying a positive attitude toward the program.
   h. Maintains a safe and healthful work place, proper housekeeping, proper illumination and ventilation, and ensures the use of personal protective equipment as required by each job.
   i. Prior to each job, ensures that Company and subcontractor employees are aware of the safety requirements and practices applicable to the job.
   j. Investigates all accidents and injuries and completes the required reports within the allotted time.
   k. Posts required and pertinent safety signs, posters and information.
   l. Serves on the Safety Committee.
   m. Serves on accident investigation committee, if requested.
   n. Ensures that all injured employees receive prompt medical attention.
   o. Instructs all employees on job-site specific emergency procedures.
   p. Reports to the Project Manager
   q. Will be present on-site.
   r. Smoking will only be allowed in site approved locations.
3. Employees
   a. Work in accordance with safe job practices and comply with Company, owner and governmental safety rules.
   b. Use required personal protective equipment.
   c. Report all unsafe conditions or practices.
   d. Make safety suggestions.
   e. Cooperate during the investigation of any accidents that occur.
   f. Take an active part and participate in safety meetings or training.
   g. Only perform jobs or operations for which they have been trained or checked out on.
   h. Serve on safety committee, if requested.
   i. Promptly report to supervisor all accidents and injuries.
   j. Complete an employee accident form when involved in an accident.
   k. Report directly to the Site Supervisor
4. Lines of authority in order:
   a. Project Manager > Site Supervisor > Employees/Subcontractors

❖ Subcontractors and Suppliers

Subcontractor and Supplier names and responsibilities will be provided as they are hired to the Contracting Officer and the Government Quality Assurance Representative prior to the operation of any equipment on-site.
Sub-contractors will receive Crane Parts Manufacturers Company Safety Training prior to on-site work and will be held responsible for all safety procedures set forth in the Crane Parts Manufacturers Company Safety manual and this site safety plan.

Current Subcontractors and Suppliers:
Company XYZ
LMNOP, Inc.

❖ Statement of Safety and Health Policy

It is the policy of Crane Parts Manufacturers (CPM) to provide a safe and healthful work environment for our employees. The personal safety and health of each employee of the Company is of primary importance. Our objective is a safety and health program that will reduce the number of injuries and illnesses. Our goal is zero accidents and injuries.

❖ Accident Reporting

The Crane Parts Manufacturer Project Manager shall be required to:
Report all accidents as soon as possible but not more than 24 hours afterwards to the Contracting Officer/Representative (CO/COR).

The Project Manager shall thoroughly investigate the accident and submit the findings of the investigation along with appropriate corrective actions to the CO/COR in the prescribed format as soon as possible but no later than five (5) working days following the accident.

Corrective actions will be implemented as soon as reasonably possible.

❖ Training

The Site Supervisor will conduct safety orientation/training for each new employee prior to work and job-site assignment. The supervisor will document the names of the attendees and the topics reviewed, and provide the information to the on-site government quality assurance representative.

The safety orientation will consist, as a minimum, of the following topics:

- Personal protective equipment requirements.
- Hazardous substances being used.
- Specific site safety requirements.
- Unusual conditions (e.g., excavating/trenching).
- Emergency telephone numbers and location of nearest phone.
- Location of closest medical treatment facility.
- Location of fire fighting equipment.
- Qualified first aid/CPR persons on site.
- Accident reporting.
- Housekeeping.

All equipment operators will be properly qualified. Equipment will be operated only by a qualified operator that has passed a practical examination and is certified or trained for operation of that specific type of equipment.
The project manager and supervision will ensure that all personnel are properly trained and instructed for all jobs which require specific training and/or competency to meet all applicable OSHA regulations, state and federal law, and activity requirements.

❖ Activity Hazard Analysis (AHA)

Principle Steps	Potential Hazards	Recommended Controls
• Off Load of Crane at Site • Erection of Crane at Facilities • Certified Load Testing	Falling Tools/Hardware/Other	• Area of work will be roped off or marked to prevent pedestrian traffic. • Only qualified personnel will operate the equipment • Operators will be instructed to not lift over pedestrian traffic. • Rigging will be performed by qualified personnel only • Do not remove tie down chains until load has been supported by forklift or mobile crane
• Installation of Electrical Conductors • Start-up of Crane • Testing of Crane	Electric Shock	• Discuss building power with General Contractor • The floor mounted disconnect will be locked out while CPM is on site until crane is ready to operate • Personnel will follow guidelines for lockout/tagout procedures.
• Mounting Electrical Conductor Brackets. • Miscellaneous Components During Assembly of Crane.	Fire/Welding/Hotwork Fall Hazard	• Burn blankets will be used during cutting/welding procedures to catch slag/sparks and to protect existing structures • Fire extinguishers will be placed in the vicinity and in surrounding areas of the "hotwork" prior to start of work • Emergency phone number for the Fire Department will be posted at the designated location on-site and in Appendix K of the Accident Prevention Plan • 100% tie off required in manlift

BB. **Training Course Outline**

Crane Training Outline

1. Safety Training. (2 hrs) - Maximum Class Size 10 Personnel
    a. General Crane Terminology
    b. Safe Operating Procedures
    c. OSHA Requirements for Cranes and Hoists
    d. Pre-use inspection of equipment.
    e. Safety features on Crane

2. Operational Training (2 hours) - Maximum Class Size 10 Personnel
    a. Operator / Rigger Communication Using hand signals
    b. Crane Operators Pre-use Inspection
    d. Safe Practices
    e. Operation
        i. Hoist
        ii. Trolley
        iii. Bridge
    f. Shut down
    g. Radio Control
    h. Emergency Stop Buttons
    i. Warning Devices

3. Trouble Shooting and Maintenance (4 hours) - Maximum Class Size 8 Personnel
    a. Maintenance Manual Review
        i. Lubrication
        ii. Brake Adjustment
        iii. Preventative Maintenance
    b. Drive Manual Review
    c. Review of Electrical Drawings
    d. Crane VFD Review and Minor Programming Features
    e. Required OSHA Inspections and Proper Documentation

CC. Brake Adjustment Report

Please see the following page for Brake Adjustment Report.

Brake Adjustment Record Form

Contract Number: NXXXXX-XX-XXXXX-XXXX

Crane Manufacturer: Crane Parts Manufacturers

Crane Capacity: 3-Ton

Crane Serial Number: XXXXXX

Brake Information				Rated Torque	Spring Length/ Torque Setting (units)			Air Gap/Plunger Stroke (units)			Lining/Pad Thickness (units)			Wheel Dia./ Disc Thickness (units)		Inspector	Date
Location/Function	Manufacturer	Model	Serial Number	(units)	Min	Max	Actual	Min	Max	Actual	Actual	Min	Contact %	Actual	Min		
Hoist motor brake	Stearns	105604-100 DEF	72242H001-00001 -0610	15 ft-lb	1.51"	1.55"	1.53"	.45"	.69"	.46"	NA	NA	NA	.180"	.093"		5/5/10
Trolley motor brake	Stearns	105600-100 BEF	72237H001-0001-0610	1.5 ft-lb	1.67"	1.71"	1.68"	.38"	.69"	.39"	NA	NA	NA	.180"	.093"		5/5/10
Bridge motor brke 1	Dings	2-51003-050	396174-008	3 ft-lb	NA*	NA*	1.65"	.060"	.150"	.067"	NA	NA	NA	.19"	.13"		5/5/10
Bridge motor brke 2	Dings	2-51003-050	396174-013	3 ft-lb	NA*	NA*	1.67"	.060"	.150	.063"	NA	NA	NA	.19"	.13"		5/5/10

** Note: Dings brake springs are bronze color, with mfg setting length; there is no min/max.*

Actual field measurements

when field measurement can not be done, provide new disc nominal thickness

signature and date are required on each entry line for validation

NOTES:

1. Any change to brake settings voids the signature and requires resubmittal of Brake Adjustment Record Form.
2. Contact percentage is only applicable to shoe and caliper disc brakes.
3. Wheel diameter is only applicable to shoe brakes.
4. Fill "N/A" in blocks that are not applicable to the brake.

DD. Shop Test Deficient Items List

Please find an example of this item on the following pages.

Navy Crane Center Post Shop Test Sign Off Sheet

Project		Date	
Contract No.		Contractor	

Name	Signature/Date	Organization	Phone	Email

NCC Form 08-002

The above signatures have verified that a shop test has been performed as required by the contract specification. Rework items that have been identified and have not been verified as corrected by the government at the conclusion of the shop test have been recorded and attached to this form. The Contractor, NAVCRANECEN, and Customer representatives (if applicable) shall initial each page of the punch list items attached to this form.

NCC Form 08-002, Rev 1, September 2009

20 TON OET for Machine Shop Building - REWORK LISTING

Data date as of 10 June 2010

CONTRACT # N12345-XX-X-XXXX

CRANE: 20 TON OET for Machine Shop

C = Complete

I = Incomplete

Worksheet	Total Number of Rework	Rework Type						Verification						Total Open
		Hardware		Drawing		Document & CCRF		Non-Crit		Critical		Field		
		C	I	C	I	C	I	C	I	C	I	C	I	
Structural	5	0	5	0	0	0	0	0	0	0	2	0	3	**5**
Electrical	12	0	10	0	2	0	0	0	2	0	2	0	8	**12**
Mechanical	6	0	6	0	0	0	0	0	0	0	2	0	4	**6**
Shop Test	1	0	0	0	1	0	0	0	0	0	1	0	0	**1**
Field Test	0	0	0	0	0	0	0	0	0	0	0	0	0	**0**
Total	**24**	**0**	**21**	**0**	**3**	**0**	**0**	**0**	**2**	**0**	**7**	**0**	**15**	**24**

Critical Items to be Verified before shipping	7
3rd Party Verifications	0
Open Items to be Verified Before Shipping	7

The Contractor, NAVCRANECEN, and Customer representatives (if applicable) shall initial each page of the punch list items attached to form 08-002 (previous page).

G.S. Contractor 6/10/10
DC NCC 6-10-10
J.G NNSY 6/10/10

20 TON OET for Machine Shop Building - REWORK LISTING

CONTRACT # N12345-XX-X-XXXX
CRANE: 20 TON OET for Machine Shop

Data date as of 10 June 2010

Structural

Verification
C - Critical (Must be verified before shipping)
N - Non-critical (Not needed to be verified before shipping)
F - Field (Can not be verified until the field)

Type of Rework
H - Hardware change/Equipment verification
D - Drawing Change
O - Documentation/CCRF Required/Record of Condition

Status
C - Complet
I - Incomple

ITEM	DATE FOUND	FOUND BY	DESCRIPTION	Verification	Type of Rework	COMMENTS	RESOLUTION	DATE VERIFIED	VERIFIED BY	STATUS
S-001	6/8/10	DC	Drum pedestal foundation weld at base towards the drum, has incomplete fusion at the corner.	C	H					I
S-003	6/8/10	DC	Main hoist primary and secondary brake foundation feet have insufficient fillet legs.	C	H					I
S-005	6/8/10	DC	Signage on both ends of trolley have a capacity of 42,000 Lbs	F	H		Contractor will change to read 40,000 lb.			I
S-009	6/8/10	DC	Capacity signs for cranes not installed.	F	H					I
S-009	6/8/10	DC	Touch up paint needed at relocated cross over ladder.	F	H					I

G.S. Contractor 6/10/10
DC NCC 6-10-10
J.G NNSY 6/10/10

20 TON OET for Machine Shop Building - REWORK LISTING

Electrical

CONTRACT # N12345-XX-X-XXXX
CRANE: 20 TON OET for Machine Shop

Data date as of 10 June 2010

G.S. Contractor 6/10/10
DC NCC 6-10-10
J.G NNSY 6/10/10

Verification
C - Critical (Must be verified before shipping)
N - Non-critical (Not needed to be verified before shipping)
F - Field (Can not be verified until the field)

Type of Rework
H - Hardware change/Equipment verification
D - Drawing Change
O - Documentation/CCRF Required/Record of Condition

Status
C - Complet
I - Incomplet

ITEM	DATE FOUND	FOUND BY	DESCRIPTION	Verification	Type of Rework	COMMENTS	RESOLUTION	DATE VERIFIED	VERIFIED BY	STATUS
E-002	6/8/10	JG	Conductors to the receptacle on the trolley has 16 AWG conductors going to the receptacle. These conductors should be 14 AWG according to the dwgs.	C	H					I
E-007	6/8/10	JG	Equipment grounding conductors for all components in control panel are improperly grounded to improper ground points. This includes drives, DBU, transformers, AC, receptacle, heater and festoon grounds.	C	H	Per spec para 2.7.1.3.f. all equipment grounding conductors shall have all paint removed from their termination points or shall have "cut" washers installed.				I
E-008	6/8/10	JG	DBR's have not been permanently connected and installation and use of appropriate high temp wire should be made in the field.	F	H					I
E-019	6/8/10	JG	Festoon wire is temporary and no penetrations have been made in either the control cabinet or the trolley junction box. The cable carrier system and all festoon connections and penetrations will need to be verified ion the field.	F	H	Wiring is complete but heat shrink not sealed. The seal will be noted on the field test section.				I
E-032	6/23/2010	DC	Festoon conductor track (Conductix) did not ship.	F	H					I
E-033	6/23/2010	DC	Part of the shielded control wire did not ship	F	H					I
E-036	7/8/2010	DC	Fault relays (6?) between each trolley needed.	F	H					I
E-037	714/2010	JG	Drain holes are needed in tray for chain electrification system.	F	H	3/8" dia min				I
E-038	714/2010	JG	Drain holes are needed at the panel cable race.	F	H					I
E-039	714/2010	DC	Dwg 10 of 21 shall be updated to reflect the parameters necessary to configure the load check in a Series 2 drive. Page 10 0f 21 card D)-02C Parameter F5-01 = 35 in lieu of 27	N	D	This item will be moved to the Field Test booklet.,				I
E-040	714/2010	DB	Dwg 13 of 21 shall be updated to reflect the parameters necessary to configure the load check in a Series 2 drive. Page 10 0f 21 card D)-02C Parameter F5-01 = 35 in lieu of 27Page 13 0f 21 card D)-02C Parameter F5-01 = 35 in lieu of 27	N	D	This item will be moved to the Field Test booklet.				I
E-041	714/2010	JG	Hoist #2 disconnect switch junction box is missing bonding jumper for door.	F	H					I

20 TON OET for Machine Shop Building - REWORK LISTING

CONTRACT # N12345-XX-X-XXXX

CRANE: 20 TON OET for Machine Shop

Data date as of 10 June 2010

Mechanical

Verification
C - Critical (Must be verified before shipping)
N - Non-critical (Not needed to be verified before shipping)
F - Field (Can not be verified until the field)

Type of Rework
H - Hardware change/Equipment verification
D - Drawing Change
O - Documentation/CCRF Required/Record of Condition

Status
C - Complet
I - Incomple

ITEM	DATE FOUND	FOUND BY	DESCRIPTION	Verification	Type of Rework	COMMENTS	RESOLUTION	DATE VERIFIED	VERIFIED BY	STATUS
M-001	6/8/10	JG	Trolley bumpers missing captivation means as per B 30.2-1.8.3 Trolley Bumpers.	C	H					I
M-006	6/8/10	DA	Inside trolley wheel grease fitting painted, needs to be replaced.	C	H	Grease fittings are located on the end of the trolley opposite of the gearbox.				I
M-014	6/8/10	DA	Verify hook rotates freely and that it has self-closing safety latch	F	H					I
M-017	6/8/10	DC	Hoist block, hook and nut were not delivered with trolley.	F	H					I
M-019	6/8/10	DC	Trade debris on hoist drum.	F	H	The drum shall be cleaned and inspected prior reeving the block.				I
M-020	6/8/10	DC	Hoist block sheaves have paint in groves	F	H					I

G.S. Contractor 6/10/10
DC NCC 6-10-10
J.G NNSY 6/10/10

G.S. Contractor 6/10/10
DC NCC 6-10-10
J.G NNSY 6/10/10

20 TON OET for Machine Shop Building - REWORK LISTING

Shop Test

CONTRACT # N12345-XX-X-XXXX
CRANE: 20 TON OET for Machine Shop

Data date as of 10 June 2010

Verification
C - Critical (Must be verified before shipping)
N - Non-critical (Not needed to be verified before shipping)
F - Field (Can not be verified until the field)

Type of Rework
H - Hardware change/Equipment verification
D - Drawing Change
O - Documentation/CCRF Required/Record of Condition

Status
C - Complet
I - Incomple

ITEM	DATE FOUND	FOUND BY	DESCRIPTION	Verification	Type of Rework	COMMENTS	RESOLUTION	DATE VERIFIED	VERIFIED BY	STATUS
ST-004	6/9/10	JG	Contractor shall update the schematics based on the rewiring of the main hoist and trolley motor over temperature circuits.	C	D					I
ST										

EE. Operation & Maintenance Data

Operation and Maintenance Manual

1. The *Operation and Maintenance Manual* shall have a table of contents.
   The contents shall include:
   Operation instruction, preventive maintenance, parts information, drawing list, supply list, catalog cuts, photographs, and calculations.

2. The body of the manuals shall include the following:
   Detailed written procedures, operation instructions, preventive maintenance information, drawings, parts information, supplies needed, catalog cuts, photographs, and calculations.

3. *Operation*
   a. Operation information shall include the following:
      I. Detailed crane operations,
      II. Safety device functions
      III. Load handling safety instructions,
      IV. Special precautions for starting/stopping.

4. *Maintenance*
   a. Maintenance information shall include recommended maintenance procedures and manufacturer's installation and maintenance manuals (for purchased components) and lubrication instructions. Also, include the following:
      I. Maintenance and programming instructions for the drives.
      II. Maintenance instructions including maintenance, alignment, adjustment, and calibration instructions for commercial components and parts lists.
      III. Preventive maintenance instructions including location of lubrication points, type of lubricant to be used, and the frequency of lubrication, which shall agree with the lubrication drawing provided.
      IV. A complete listing of all control system parameters with an explanation of their functions.
   b. Parts information shall include all information on all contractor-designed parts, all purchased sub-assemblies and components including the manufacturer's part number. The information shall be broken-out to the smallest replacement part. Also, include a recommended spare parts list.
   c. Drawings shall be the as-built construction drawings.
   d. Catalog cuts of the approved design.
   e. Photographs if applicable.
   f. Approved calculations

FF. Control System Parameter Record

Please find an example of this item on the following pages.

Model: 4045 G+ Series 3, Flash ID: 8001.5
Customer Name:
Application:
Order Number:

SNAPSHOT OF CONTROL SYSTEM PARAMETER LIST

Parameter	Description	Setting	Unit	Mod
A1-00	Select Language	0:English		
A1-01	Access Level	2:Advanced Level		
A1-02	Control Method	0:V/F Control		*
A1-03	Motion	0:Traverse		*
A1-04	Speed Ref	5:Uni-Polar analog		*
A1-05	Init Parameters	0:No Initialize		
A1-06	Enter Password 1	Unlocked		
A1-08	Enter Password 2	Locked		
A2-01	User Param 1	No User Data		
A2-02	User Param 2	No User Data		
A2-03	User Param 3	No User Data		
A2-04	User Param 4	No User Data		
A2-05	User Param 5	No User Data		
A2-06	User Param 6	No User Data		
A2-07	User Param 7	No User Data		
A2-08	User Param 8	No User Data		
A2-09	User Param 9	No User Data		
A2-10	User Param 10	No User Data		
A2-11	User Param 11	No User Data		
A2-12	User Param 12	No User Data		
A2-13	User Param 13	No User Data		
A2-14	User Param 14	No User Data		
A2-15	User Param 15	No User Data		
A2-16	User Param 16	No User Data		
A2-17	User Param 17	No User Data		
A2-18	User Param 18	No User Data		
A2-19	User Param 19	No User Data		
A2-20	User Param 20	No User Data		
A2-21	User Param 21	No User Data		
A2-22	User Param 22	No User Data		
A2-23	User Param 23	No User Data		
A2-24	User Param 24	No User Data		
A2-25	User Param 25	No User Data		
A2-26	User Param 26	No User Data		
A2-27	User Param 27	No User Data		
A2-28	User Param 28	No User Data		
A2-29	User Param 29	No User Data		
A2-30	User Param 30	No User Data		
A2-31	User Param 31	No User Data		
A2-32	User Param 32	No User Data		
B1-01	Reference 1	0.00	Hz	
B1-02	Reference 2	0.00	Hz	
B1-03	Reference 3	0.00	Hz	
B1-04	Reference 4	0.00	Hz	
B1-05	Reference 5	0.00	Hz	
B1-06	Reference 6	0.00	Hz	
B1-07	Reference 7	0.00	Hz	
B1-08	Reference 8	0.00	Hz	
B1-09	Reference 9	0.00	Hz	

'*' indicates a modified constant

Parameter	Description	Setting	Unit	Mod
B1-10	Reference 10	0.00	Hz	
B1-11	Reference 11	0.00	Hz	
B1-12	Reference 12	0.00	Hz	
B1-13	Reference 13	0.00	Hz	
B1-14	Reference 14	0.00	Hz	
B1-15	Reference 15	0.00	Hz	
B1-16	Reference 16	0.00	Hz	
B1-17	Jog Reference	6.00	Hz	
B1-18	Ref Priority	1:Analog Ref Only		
B2-01	Ref Upper Limit	100.0	%	
B2-02	Ref Lower Limit	0.0	%	
B2-03	Ref1 Lower Limit	2.0	%	
B2-04	Alt Upper Limit	100.0	%	
B3-01	Reference Source	1:Terminals		
B3-02	Run Source	1:Terminals		
B3-03	Stopping Method	0:Decel to Stop		
B3-04	Change Rotation	0:Normal Rotation		
B3-06	Cntl Input Scans	1:5mS - 2 Scans		
B3-07	LOC/REM RUN Sel	0:Cycle Extrn RUN		
B3-08	RUN CMD at PRG	0:Disabled		
B3-10	AllowRun@Powerup	0:Disabled		
B4-01	MOP Ref Memory	0:Disabled		
B4-02	Trim Control Lvl	10	%	
B5-01	Accel Time 1	7.0	sec	*
B5-02	Decel Time 1	8.0	sec	*
B5-03	Accel Time 2	2.0	sec	
B5-04	Decel Time 2	2.0	sec	
B5-05	Acc Time N Chg	2.0	sec	
B5-06	Dec Time N Chg	2.0	sec	
B5-08	Fast Stop Time	0.5	sec	
B5-09	Acc/Dec Units	1:0.1 Seconds		
B5-10	Acc/Dec SW Freq	120.0	Hz	
B5-11	SW Freq. Compare	1:Upper SW Freq		
B5-12	Accel Time 3	3.0	sec	
B5-13	Decel Time 3	3.0	sec	
B5-14	Accel Time 4	3.0	sec	
B5-15	Decel Time 4	3.0	sec	
B6-01	SpdSrch at Start	2:SpdsrchI Disable		
B6-02	SpdSrch Current	120	%	
B6-03	SpdSrch Dec Time	2.0	sec	
B6-05	Search Delay	0.2	sec	
B6-10	Srch Detect Comp	1.10		
B6-14	Bidir Search Sel	1:Enabled		
B8-01	Jump Freq 1	0.0	Hz	
B8-02	Jump Freq 2	0.0	Hz	
B8-03	Jump Freq 3	0.0	Hz	
B8-04	Jump Bandwidth	1.0	Hz	
B9-01	Field-Weak Lvl	80	%	
B9-02	Field-Weak Freq	0.0	Hz	
C1-01	Quick Stop 0/1	0:Disabled		
C1-02	Quick Stop Time	1.0	sec	
C1-03	Reverse Plug 0/1	1:Enabled		*
C1-04	Rev-Plg Dec Time	8.0	sec	*

GG. List of Parameters and Crane OEM's Approved Crane Range

Please find an example of this item on the following page.

List of Paramaters and Crane OEM's Approved Crane Range

(Complete one form for each drive on the crane, identify Parameter Identification, Crane Design Range, Current Setting and Drive OEM Range for all parameters used, identify all parameters not used as "Not Applicable".)

Crane Drive Usage

Crane	20/5T PNSY
Function (Hoist / Bridge / Trolley)	HOIST

Date 5-10-10

Manufacturer and Drive

Drive Manufacturer	NCC DRIVE
Drive Type	HD+3

Acceleration and Deceleration Times *(Identify the range for any acceleration and deceleration rates of the drive)*

Function	Parameter ID	Drive OEM Range	Crane Range	Current Setting	Applicable
Acceleration Time 1	A-01	0-25 sec	2-10 SEC	3.5 sec	Y
Deceleration Time 1	D-01	0-25 sEC	1.5-10 SEC	2 SEC	Y
Acceleration Time 2 (If multiple acceleration rates are required)	A-02	0-25 sEC	N/A	N/A	N
Deceleration Time 2 (If multiple decceleration rates are required)	D-02	0-25 SEC	N/A	N/A	N

Emergency Stop/ Quick Stop/ Reverse Plugging Simulation *(Identify if a quick stop, emergency stop, simulated plugging or other function which causes an increased acceleration or deceleration rate can be activated and provide acceptable ranges of deceleration and acceleration (as applicable)*

Function	Parameter ID	Drive OEM Range	Crane Range	Current Setting	Applicable
Emergey Stop/ Quick Stop Enable	ES-01	0-1	N/A	N/A	N
Emergency Stop/ Quick Stop Deceleration time	ES-02	0-25 sec	N/A	N/A	N
Reverse Plug Enable	RP-01	0-1	0-1	1	Y
Reverse Plug Decel Time	RP-02	0-25 sec	1.5-10 sec	1.5 sec	Y
Reverse Plug Accel Time	RP-03	0-25 sec	2-10 sec	2 sec	Y

Micro Speed/ Slow Speed/Ultra Lift/Quick Lift *(Identify if a function that can limit the speed to below 60 HZ or allow speeds greater than 60 HZ can be activated and provide the acceptable speed ranges for these functions.)*

Function	Parameter ID	Drive OEM Range	Crane Range	Current Setting	Applicable
Micro Speed/Slow Speed Enable	MS-01	0-1	0-1	1	Y
Micro Speed/Slow Speed Gain Multiplier	MS-011	0-100%	3-100%	25%	Y
Ultra Lift/Quick Lift/Fast Lift Enable	QL-01	0-1	0-1	1	Y
Ultra Lift/Quick Lift/Fast Lift Maximum Frequency Forward	QL-02	0-150 HZ	60-120 HZ	120 HZ	Y
Ultra Lift/Quick Lift/Fast Lift Maximum Frequency Reverse	QL-03	0-150 HZ	60-120 HZ	120 HZ	Y
Ultra Lift/Quick Lift/Fast Lift Maximum Torque Allowed Fast Speed Forward	QL-04	0-100%	0-8.5%	7%	Y
Ultra Lift/Quick Lift/Fast Lift Maximum Torque Allowed Fast Speed Reverse	QL-05	0-100%	0-8.5%	7%	Y
Maximum Frequency Of Operation At Fast Speed	QL-06	40-150 HZ	40-120 HZ	120 HZ	Y

- 100% load = 85% DRIVE TORQ
- 10% limit for Quick lift
yield .1 x 85% = 8.5%

No-Load Brake Start/Stop *(Indentify for Hoist Functions without load brakes the maximum duration of load float)*

Function	Parameter ID	Drive OEM Range	Crane Range	Current Setting	Applicable
Load Float Time	LF-01	0-255 sec	0-5 sec.	3 sec.	Y

Speed Points *(For Functions with unique speed points identify the speeds each speed point can be set.)*

Function	Parameter ID	Drive OEM Range	Crane Range	Current Setting	Applicable
Speed Point 1	S-01	0-60 HZ	N/A	N/A	N
Speed Point 2	S-02	0-60 HZ	N/A	N/A	N
Speed Point 3	S-03	0-60 HZ	N/A	N/A	N
Speed Point 4	S-04	0-60 HZ	N/A	N/A	N
Speed Point 5	S-05	0-60 HZ	N/A	N/A	N

APPENDIX F

HH. Frequency Allocation Application

Please find an example of this item on the following pages.

APPLICATION FOR EQUIPMENT FREQUENCY ALLOCATION	CLASSIFICATION UNCLASSIFIED	DATE 3/12/2010	FORM APPROVED OMB No. 0704-0188 1 of 7 Pages

DOD GENERAL INFORMATION

TO	FROM
Department of the Navy Navy Marine Corp Spectrum Center 2461 Eisenhower Avenue Suite 1202 Alexandria, VA 22331-1400	Company Name and Address

1. APPLICATION TITLE Manufacturer of the equipment

2. SYSTEM NOMENCLATURE MLTX Series

3. STAGE OF ALLOCATION *(X one)*

- ☐ a. STAGE 1 CONCEPTUAL
- ☐ b. STAGE 2 EXPERIMENTAL
- ☐ c. STAGE 3 DEVELOPMENTAL
- ■ d. STAGE 4 OPERATIONAL

4. FREQUENCY REQUIREMENTS

a. FREQUENCY(IES) 430 to 439.8 MHz

b. EMISSION DESIGNATOR(S) TX = 224KF1D RX = 224KF1D

5. TARGET STARTING DATE FOR SUBSEQUENT STAGES

a. STAGE 2	b. STAGE 3	c. STAGE 4 3/26/2010

6. EXTENT OF USE

INTERMITTENT

7. GEOGRAPHICAL AREA FOR

a. STAGE 2

b. STAGE 3

c. STAGE 4

8. NUMBER OF UNITS

a. STAGE 2	b. STAGE 3	c. STAGE 4 Two (2) Transmitters

Government representatives' info here

9. NUMBER OF UNITS OPERATING ME ENVIRONMENT: ONE (1) ONLY

10 OTHER J/F 12 APPLICATION NUM

- ☐ a. SUPERSEDED J/F 12/
- ☐ b. RELATED J/F 12/

11. IS THERE ANY OPERATIONAL REQUIREMENT AS DESCRIBED IN THE INSTRUCTIONS FOR PARAGRAPH 11?

☐ a. YES ☐ b. NO ☐ c. NAvail

12. NAMES AND TELEPHONE NUMBERS

	(1) COMMERCIAL	(2) AUTOVON
a. PROGRAM MANAGER	Work phone #	DSN
b. PROJECT ENGINEER	Work phone #	DSN

13. REMARKS

DOWNGRADING INSTRUCTIONS	CLASSIFICATION	
N/A	UNCLASSIFIED	

DD Form 1494, AUG 96

CLASSIFICATION UNCLASSIFIED	PAGE 2 of 7 Pages

TRANSMITTER EQUIPMENT CHARACTERISTICS

1. NOMENCLATURE, MANUFACTURER'S MODEL NO. MLTX transmitter Unlicensed (Part 15)	**2. MANUFACTURER'S NAME** Manufacturer's name here (also on other sheets)
3. TRANSMITTER INSTALLATION Man-portable carried by crane operator	**4. TRANSMITTER TYPE** FSK UHF Solid State Digital
5. TUNING RANGE 430 to 439.8MHz	**6. METHOD OF TUNING** Synthesized PLL
7. RF CHANNELING CAPABILITY 430.0, 432.4, 436.0 to 439.8MHz in 200kHz increments, 20 channels, 433.125 to 434.725MHz in 200kHz increments, 9 channels	**8. EMISSION DESIGNATOR(S)** 224KF1D
9. FREQUENCY TOLERANCE +/- 10ppm	
10. FILTER EMPLOYED *(X one)* ☒ a. YES ☐ b. NO	
11. SPREAD SPECTRUM *(X one)* ☐ a. YES ☒ b. NO	**12. EMISSION BANDWIDTH** *(X and complete as applicable)* ☐ CALCULATED ☒ MEASURED
13. MAXIMUM BIT RATE 9600 bps	a. -3dB = 80.5kHz b. -20dB = 123.5kHz
14. MODULATION TECHNIQUES AND CODING BFSK Digital Telemetry Data with CRC	c. -40dB = NA d. -60dB = 760kHz e. OC-BW = 223.8kHz **15. MAXIMUM MODULATION FREQUENCY** 9.6kHz
16. PRE-EMPHASIS *(X one)* ☐ a. YES ☒ b. NO	**17. DEVIATION RATIO** 8.333
	18. PULSE CHARACTERISTICS
19. POWER	a. RATE NA
a. MEAN 4.0mW	b. WIDTH
b. PEP N/A	c. RISE TIME
20. OUTPUT DEVICE Transistor, Chipcon CC1020	d. FALL TIME e. COMP RATIO
	21. HARMONIC LEVEL
22. SPURIOUS LEVEL -79.6dBc	a. 2nd -62.9dBc
23. FCC TYPE ACCEPTANCE NO. TNE-430MLTX	b. 3rd -60.6dBc c. OTHER -55.5dBc @ 1720MHz

24. REMARKS

CLASSIFICATION UNCLASSIFIED	

DD Form 1494, AUG 96

CLASSIFICATION	PAGE
UNCLASSIFIED	3 of 7 Pages

RECEIVER EQUIPMENT CHARACTERISTICS

1. NOMENCLATURE, MANUFACTURER'S MODEL NO. Part 15 receiver, 46S03947	**2. MANUFACTURER'S NAME**
3. RECEIVER INSTALLATION Overhead Cranes	**4. RECEIVER TYPE** Single Conversion, Superheterodyne
5. TUNING RANGE 430 to 439.8 MHz	**6. METHOD OF TUNING** Synthesizer, fixed crystal
7. RF CHANNELING CAPABILITY 430.0, 432.4, 436.0 to 439.8MHz in 200kHz increments, 20 channels, 433.125 to 434.725MHz in 200kHz increments, 9 channels	**8. EMISSION DESIGNATOR(S)** 224KF1D
9. FREQUENCY TOLERANCE +/- 10ppm	

10. IF SELECTIVITY	1st	2nd	3rd
a. -3 dB	307.2kHz		
b. -20 dB	307.2kHz		
c. -60 dB	307.2kHz		

11. RF SELECTIVITY (X and complete as applicable)

☐ CALCULATED ☒ MEASURED

a. -3 dB 21.3MHz

b. -20 dB 26.4MHz

c. -60 dB 36.6MHz

d. Preselection Type SAW filter

12. IF FREQUENCY	
a. 1st 307.2 MHz	**13. MAXIMUM POST DETECTION FREQUENCY** 4900Hz
b. 2nd N/A	**14. MINIMUM POST DETECTION FREQUENCY** 900Hz
c. 3rd N/A	**16. MAXIMUM BIT RATE** 9600 bps

15. OSCILLATOR TUNED	1st	2nd	3rd
a. ABOVE TUNED FREQUENCY	X		
b. BELOW TUNED FREQUENCY			
c. EITHER ABOVE OR BELOW THE FREQUENCY			

17. SENSITIVITY

a. SENSITIVITY -105 dBm

b. CRITERIA BER test

c. NOISE FIG 7dB

d. NOISE TEMP NA

18. DE-EMPHASIS *(X one)*

☐ a. YES ☒ b. NO

19. IMAGE REJECTION 30.9 dB

20. SPURIOUS REJECTION 52dB

21. REMARKS

DD Form 1494, AUG 96

CLASSIFICATION UNCLASSIFIED	PAGE 4 of 7 Pages

ANTENNA EQUIPMENT CHARACTERISTICS

1.
☒ a. TRANSMITTING ☐ b. RECEIVING ☐ c. TRANSMITTING AND RECEIVING

2. NOMENCLATURE, MANUFACTURER'S MODEL NO.	3. MANUFACTURER'S NAME
4. FREQUENCY RANGE 430 to 439.8 MHz	5. TYPE Inverted F PCB
6. POLARIZATION Vertical	7. SCAN CHARACTERISTICS a. TYPE Fixed
8. GAIN	b. VERTICAL SCAN
a. MAIN BEAM -12.3dBi	(1) Max Elev N/A
b. 1st MAJOR SIDE LOBE None, Omni directional	(2) Min Elev N/A
	(3) Scan Rate N/A
9. BEAMWIDTH	c. HORIZONTAL SCAN
a. HORIZONTAL 150°	(1) Sector Scanned N/A
b. VERTICAL 180°	(2) Scan Rate N/A
	d. SECTOR BLANKING *(X one)* ☐ (1) YES ☒ (2) NO

10. REMARKS

CLASSIFICATION UNCLASSIFIED	

DD Form 1494, AUG 96

Manufacturer's information, including models number entered here

CLASSIFICATION UNCLASSIFIED	PAGE 5 of 7 Pages

ANTENNA EQUIPMENT CHARACTERISTICS

1. ☐ a. TRANSMITTING ☒ b. RECEIVING ☐ c. TRANSMITTING AND RECEIVING

2. NOMENCLATURE, MANUFACTURER'S MODEL NO.	3. MANUFACTURER'S NAME
4. FREQUENCY RANGE 430 to 439.8 MHz	5. TYPE ½ Wave monopole
6. POLARIZATION Vertical	7. SCAN CHARACTERISTICS a. TYPE Fixed
8. GAIN	b. VERTICAL SCAN
a. MAIN BEAM 6.1dBi	(1) Max Elev N/A
b. 1st MAJOR SIDE LOBE None, Omni directional	(2) Min Elev N/A
	(3) Scan Rate N/A
9. BEAMWIDTH	c. HORIZONTAL SCAN
a. HORIZONTAL 360°	(1) Sector Scanned N/A
b. VERTICAL 180°	(2) Scan Rate N/A
	d. SECTOR BLANKING *(X one)* ☐ (1) YES ☒ (2) NO

10. REMARKS

CLASSIFICATION UNCLASSIFIED	

DD Form 1494, AUG 96

SAMPLE LINE DIAGRAM

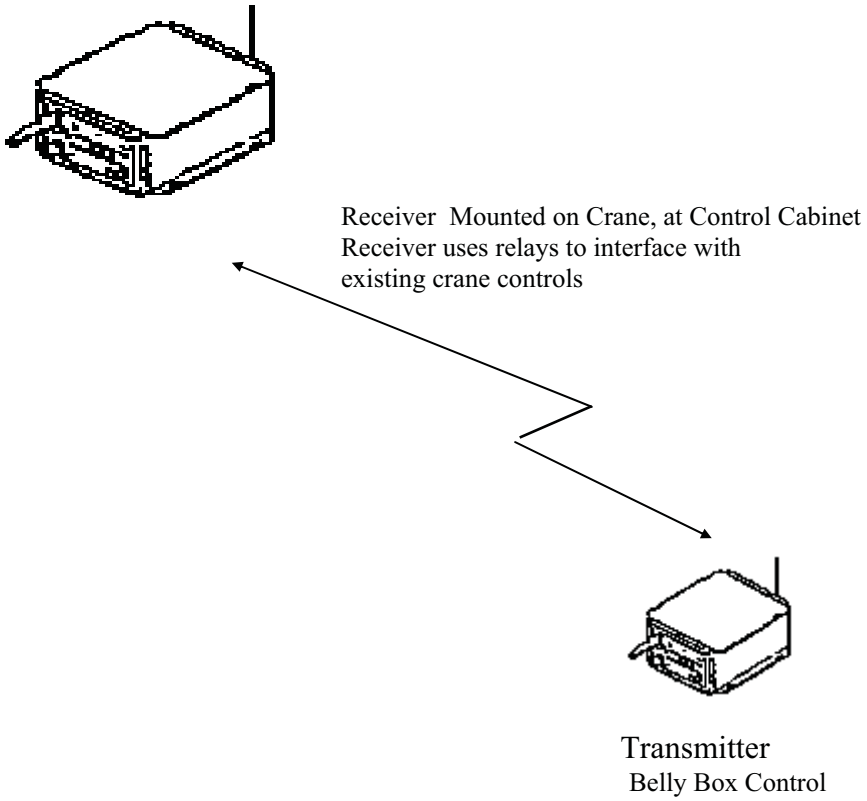

The entire system is configured to operate within shipyard buildings, with a nominal effective range of less than 300 ft. The transmitter unit is a "Belly Box" that is carried by the Crane Operator, and weighs about 3 lbs. The receiver unit is mounted on the bridge crane, and interfaces with existing control circuitry to permit remote operation of the crane without use of a wired pendant control station or having an operator located in a cab on the crane.

APPLICATION FOR SPECTRUM REVIEW	CLASSIFICATION: UNCLASSIFIED	PAGE 7 of 7 Pages

NTIA GENERAL INFORMATION

1. APPLICATION TITLE

2. SYSTEM NOMENCLATURE

3. STAGE OF ALLOCATION *(X one)*
   - ☐ a. STAGE 1 CONCEPTUAL
   - ☐ b. STAGE 2 EXPERIMENTAL
   - ☐ c. STAGE 3 DEVELOPMENTAL
   - ☐ d. STAGE 4 OPERATIONAL

4. FREQUENCY REQUIREMENTS
   - a. FREQUENCY(IES) 430 to 439.8 MHz
   - b. EMISSION DESIGNATOR(S) TX = 224KF1D RX = 224KF1D

5. PURPOSE OF SYSTEM, OPERATIONAL AND SYSTEM CONCEPTS (WARTIME USE) *(X one)* ☐ a. YES ☐ b. NO

6. INFORMATION TRANSFER REQUIREMENTS

7. ESTIMATED INITIAL COST OF THE SYSTEM

8. TARGET DATE FOR

a. APPLICATION APPROVAL	b. SYSTEM ACTIVATION	c. SYSTEM TERMINATION

9. SYSTEM RELATIONSHIP AND ESSENTIALITY

10. REPLACEMENT INFORMATION

11. RELATED ANALYSIS AND/OR TEST DATA

12. NUMBER OF MOBILE UNITS

13. GEOGRAPHICAL AREA FOR
    - a. STAGE 2
    - b. STAGE 3
    - c. STAGE 4

14. LINE DIAGRAM See page(s)	15. SPACE SYSTEMS See page(s)
16. TYPE OF SERVICE(S) FOR STAGE 4	17. STATION CLASS(ES) FOR STAGE 4

18. REMARKS

DOWNGRADING INSTRUCTIONS	CLASSIFICATION	
N/A	UNCLASSIFIED	

DD Form 1494, AUG 96

End of Document

Click here to return to the beginning of the document.