WATER QUALITY SAMPLING STUDY
VIEQUES ISLAND, PUERTO RICO

CONTRACT TASK ORDER 0395

JUNE, 2000

Prepared for:

DEPARTMENT OF THE NAVY
ATLANTIC DIVISION
NAVAL FACILITIES
ENGINEERING COMMAND
Norfolk, Virginia

Under the:

LANTDIV CLEAN Program
Contract N62470-89-D-4814

Prepared by:

BAKER ENVIRONMENTAL, INC.
Coraopolis, Pennsylvania

TABLE OF CONTENTS

Page

1.0 INTRODUCTION 1-1
1.1 Project Context 1-1
1.2 Project Scope 1-1
1.3 Project Objectives 1-1

2.0 SAMPLING PROGRAM 2-1
2.1 Sampling Program Rationale 2-1
2.2 Sampling Site Selection Rationale 2-1
2.2.1 Sampling Locations 2-2
2.2.2 Global Positioning System Techniques 2-3
2.3 Field Sampling Techniques 2-4
2.4 Analytical Methods 2-6

3.0 LABORATORY ANALYTICAL RESULTS AND COMPARISONS 3-1
3.1 Analytical Results 3-1
3.1.1 Caribtec Results 3-1
3.1.2 Savannah Results 3-1
3.1.3 Discussion of Conventional Laboratory Results 3-2
3.1.3.1 General Observations 3-2
3.1.3.2 Data Validation 3-3
3.1.3.3 Quality Assurance/Quality Control Samples 3-3
3.1.4 Columbia Results 3-6
3.1.5 Battelle Results 3-6
3.1.6 Discussion of Clean Laboratory Results 3-6
3.1.6.1 General Observations 3-6
3.1.6.2 Data Validation 3-7
3.1.6.3 Quality Assurance/Quality Control Samples 3-7
3.1.7 Conclusions Regarding Analytical Approaches 3-9
3.2 Data Comparisons 3-10
3.2.1 Comparison of Bay Samples to WQC 3-11
3.2.1 Comparison of Background Samples to WQC 3-12
3.2.3 Bay to Background Comparison 3-13
3.3 Statistical Comparisons 3-15

4.0 CONCLUSIONS 4-1

5.0 RECOMMENDATIONS 5-1

TABLE OF CONTENTS
(Continued)

LIST OF TABLES

Table 3-1	Summary of Analytical Data by Sampling Location
Table 3-2	Summary of Analytical Data by Analyte
Table 3-3	Analytical Methods and Comparison of Water Quality Standards to Detection Limits
Table 3-4	Field Blanks – Analytical Results
Table 3-5	Field Blanks and Associated Sampling Locations
Table 3-6	Performance Evaluation Sample Results
Table 3-7	Method Detection Limit Study – Summary of Analytical Data
Table 3-8	Bahia Salina del Sur – Battelle Total Constituents
Table 3-9	Bahia Salina del Sur – Battelle Dissolved Constituents
Table 3-10	Bahia Salina del Sur – Data Statistics Summary – Battelle, Total Constituents
Table 3-11	Bahia Salina del Sur – Data Statistics Summary – Battelle, Dissolved Constituents
Table 3-12	Background Data – Battelle Laboratory, Total Constituents
Table 3-13	Background Data – Battelle Laboratory, Dissolved Constituents
Table 3-14	Background Data Statistics Summary – Battelle, Total Constituents
Table 3-15	Background Data Statistics Summary – Battelle, Dissolved Constituents
Table 3-16	Comparison of Concentration Ranges – Battelle Total Constituents
Table 3-17	Comparison of Concentration Ranges – Battelle Dissolved Constituents

LIST OF FIGURES

Figure 1	Sample Location Map – Water Quality Sampling Study

LIST OF APPENDICES

Appendix A	Trace Metals in Seawater Sampling and Analysis Plan – Atlantic Fleet Weapons Training Facility, Vieques Island, Puerto Rico
Appendix B	Quality Assurance Project Plan – Trace Metals Sampling Program, Vieques Island, Puerto Rico
Appendix C	Statistical Evaluations

1.0 INTRODUCTION

1.1 Project Context

The project purpose is to provide water quality sampling services in the vicinity of the Atlantic Fleet Weapons Training Facility (AFWTF) at Vieques Island, Puerto Rico. This effort is being conducted in response to the Atlantic Division, Naval Facilities Engineering Command's (LANTDIV's) Scope Modification for CTO-0395 (September 27, 1999) and subsequent modifications as coordinated via numerous conference calls between LANTDIV, Baker Environmental, and the laboratories.

Baker Environmental, Inc. (Baker) serves as the primary contractor for field sampling activities. Battelle Ocean Sciences and Columbia Analytical Services, Inc. provided "clean" analytical services. Caribtec Laboratories, Inc conducted conventional sampling and analysis. Caribtec split their samples for analysis by a second conventional laboratory (STL-Savannah Laboratories).

1.2 Project Scope

The project scope included field sampling, sample and data analysis, and report preparation. The field sampling and sample analysis included "clean" sampling and analytical techniques and the conventional sampling and analytical techniques (those currently used to support the Navy's NPDES permit for the AFWTF). The Navy identified 22 historical background stations and other environmental quality sampling points that were sampled and evaluated. Samples were analyzed for parameters associated with the NPDES permit for the AFWTF. Data analysis and report preparation included comparisons of the different laboratory analytical results to each other, to Water Quality Criteria (WQC) applicable to Puerto Rico and to background.

1.3 Project Objectives

The objectives of this task order are threefold:

- Collect water quality samples in Bahia Salina del Sur and other locations around Vieques Island using both clean and conventional sampling and analytical techniques in order to show how results are affected by differences in sampling and analytical techniques

- Compare water quality conditions in the Bahia Salina del Sur to the WQC.

- Assess water quality conditions of Bahia Salina del Sur and compare them to background locations at similar environments around Vieques Island.

2.0 SAMPLING PROGRAM

2.1 Sampling Program Rationale

The Navy has been sampling at the AFWTF since 1983. During this period of time, technical approaches to sampling and laboratory analysis of seawater have significantly progressed. One of the historic problems at the AFWTF in terms of comparing sampling results to WQC has been that, in many cases, the WQC for individual constituents was lower than conventional laboratory detection limits.

The U.S. Environmental Protection Agency (USEPA) has recognized this problem at multiple sites under their jurisdiction. In response to this, the USEPA office of water released "Method 1669: Sampling Ambient Water for Trace Metals at EPA Water Quality Criteria Levels" in 1995. Method 1669 contains rigorous sampling protocols (commonly referred to as "clean" sampling) and specifies certain analytical techniques. The use of the clean protocols provides a better ability to quantify trace metal occurrence. This is done by limiting the amount of contamination added to the sample by sampling techniques and through the mandated use of best available analytical instrumentation and methods.

The Navy, in an effort to utilize advancing technology, designed a water quality study for the AFWTF that employed both conventional and "clean" sampling and analysis techniques. It was expected that the "clean" approach would be validated by comparing it to conventional approaches and that, because "clean" sampling and analysis provides results that are more directly comparable to WQC, clean techniques would be used in the future for compliance sampling.

2.2 Sampling Site Selection Rationale

The NPDES permit specifies 10 background sampling locations around the periphery of the LIA that had to be sampled monthly during the first year of the permit. The Navy sampled these locations on a monthly basis from October 1983 to September 1985. In addition, sampling points were established by the Puerto Rico Environmental Quality Board (EQB) for assessment of water quality inside and outside the LIA in June 1999. The established locations were reviewed for appropriateness in this study. Three groups of locations were selected for the following reasons:

- All background sampling points established in the NPDES permit were retained for this event since there is pre-existing monitoring information there and they are spaced at equal intervals around the periphery of the LIA.

- Selected sampling locations were chosen around the perimeter of Vieques where environmental conditions were expected to be similar to those found in Bahia Salina del Sur (the bay where historically almost all the discharges of ordnance that did not reach the range has occurred). and where both the Navy and PREQB had established sampling locations nearby, and

- Four additional background locations were selected to provide more complete coverage of the entire island perimeter. BKGND01 was added because it is near a conservation area and upcurrent of the range. BKGND02 gives better coverage of the bay since there was no previous sampling point at the western entrance to the bay. BKGND03 and 04 are located farther west of original sampling points as recommended by USEPA.

The section that follows describes the sampling locations discussed above in general.

2.2.1 Sampling Locations

Twenty-two sampling locations located on the north, east and south sides of Vieques Island were proposed for "clean" metals and conventional sampling for this project. Both the proposed and actual sampling locations are shown on Figure 1. All of the sample points were located with a Global Positioning System to accuracy of less than six feet horizontally. Eighteen of the twenty-two sample locations were collected from a 27-foot Boston Whaler boat. The four other sampling locations were collected from a 58-foot sport fishing boat. Samples collected from the larger boat were on average farther away from the proposed sampling locations due to underlying rock and coral formations which precluded access with the larger boat into several of the bays located around the island. This caused a change in logistical procedure in that the larger boat served as the main staging area for all of the necessary sampling supplies, whereas the smaller boat was utilized to run in and out of the bays and into areas closer to the shoreline. Clean metals sampling was conducted first at each location (after waiting 15 minutes for the boat exhaust to dissipate) by the Baker representatives; conventional sampling was performed by the Caribtec representatives. This allowed for both the clean and conventional samples to be collected from the same areas.

In some instances actual sampling locations were as much as 821 feet away from the proposed sampling location. The following lists the sampling locations for these samples with significant deviations in distances from the proposed locations, along with the reason for the difference (refer to Figure 1):

- BKGND04, 590 feet - rock/coral formation precluding advancement into the bay.
- NAVY SP #1, 590 feet - rock/coral formation and current precluding advancement to the sample location.
- NAVY SP #2, 394 feet - rock/coral formation and current precluding advancement to the sample location.
- NAVY SP #3, 821 feet - rock/coral formation and current precluding advancement to the sample location.
- RW03, 394 feet - depth of water was not sufficient for the boat to reach the sample location.
- BKGND01, 821 feet - current and rock formations precluding advancement to sample location.
- NAVY SP #6, 394 feet - rock/coral formation and current precluding advancement to the sample location.
- BKGND03, 681 feet - location of the proposed sample location was to close to boats that were docked within the bay, potential cross-contamination was an issue.

The remaining samples were all collected within 130 feet of the proposed sampling locations.

2.2.2 Global Positioning System Techniques

A mapping grade GPS unit (model Pro-XRS) manufactured by Trimble, was utilized to acquire coordinates at every sample location. The coordinate system used was the Universal Transverse Mercator (UTM), with a zone of 20 North, and a datum of 1983. Positional data was collected at

the rate of one point per second. Also, a minimum of 30 points were collected at each sampling location. From these 30 points an average was then calculated which is used as the actual position. Additionally, this particular unit accepts real-time broadcasts from Coast Guard Beacons, which improves the accuracy of the unit from 300 feet down to 6 feet. During the collection of the samples, Baker was able to receive this real-time broadcast while maneuvering to the sample locations. This unit also is enabled with several navigation functions that allow the user to input proposed sample location coordinates, then navigate to that actual position (and with real-time broadcasts, accuracy to the actual reference position are +/- 6 feet). All positional data was recorded within the data logger and then downloaded every evening into the laptop computer. Once the data was downloaded, specific GPS software enabled Baker to view actual sampling locations versus proposed. The positional data was then exported into a drawing file and then placed onto Figure 1, provided within this report.

2.3 Field Sampling Techniques

Seawater samples were obtained at 22 individual sampling locations as part of this investigation. Each of the locations was sampled using both clean and conventional techniques resulting in 44 total samples. Additionally, five field blanks, three duplicates (five duplicates were originally taken; however, two were lost in shipment) were collected using both sampling protocols. One performance evaluation sample was also submitted to each laboratory during this investigation. Sampling and analysis were performed in accordance with the Sampling and Analysis Plan (SAP) and the Quality Assurance Project Plan (QAPP) that are included in this document as Appendix A and B, respectively. The actual sampling closely followed that outlined in "EPA Method 1669 Sampling Ambient Water for Trace Metals" (included in the SAP as Appendix A). One significant modification was made to Method 1669. The field sampling crew did not wear Tyvek® suits during sampling due to the large amount of metal that was on both boats. Instead sampling personnel designed a sampling box that isolated the environmental sample from all surrounding forms of cross contamination. This box consisted of a plastic Rubbermaid container with a closable lid with the following dimensions: 3-feet long, by 2-feet wide, by 1.5-feet high. A small hole was drilled into the lid to allow the insertion of the sample tubing into the sampling box. Additionally, a section from the front of the sampling box was cut out to allow the Baker "clean hands" person access into the sampling box and the samples. This section in which was cut out was also covered with plastic to further limit potential entry of contamination into the box.

The actual sampling was performed as discussed below.

Utilizing the GPS unit to maneuver the boat to a sample location, the crew released and set the boat anchor. The boat engines and generators were turned off. The boat was allowed to drift with the current until the anchor rope was tight. Once the anchor rope was tight, the GPS operator collected positional data and stored this information in the data collector for each sample location. Once the engine was shut down, Baker personnel waited for minimum of 15 minutes before sampling set-up procedures began. After 15 minutes had elapsed, the Baker personnel referred to the on-board depth finder to determine depth of water. Upon obtaining the depth, the field crew donned all of the necessary personnel protective equipment (i.e., latex and shoulder length plastic gloves). A Teflon bottle filled with sand used as a weight and was attached to the Teflon sampling tube and lowered into the water. Based on the depth finder readings, the sampling tube was lowered over the side of the boat to a point that was half of the total depth. The tubing was placed within the pump head of a peristaltic pump. The pump was turned on and the tubing was purged with seawater for a minimum of one minute. After the one-minute purge, the tubing was then placed within the top portion of the sampling box. The "dirty hands" person opened the outer bags, which contained the Teflon sample bottles. The "clean hands" person retrieved the inner bag with the sample bottle and placed the bag and bottle within the sampling box. Once the bag was in the sampling box, the "clean hands" person opened the bag and retrieved the bottle. Based on duplicate samples being sent to multiple laboratories, at least two bottles were within the sampling box at one time. The pump was turned on after the bottles were opened. Because the sample splitter had preferential side loading, Baker personnel filled sample bottles in one-quarter increments to achieve accurate split samples. Upon filling the sample bottles, the "clean hands" person placed the sample bottles back into the plastic bag and sealed them before removing the samples from the sampling box and placing them within the cooler. The "dirty hands" person then took the full sample bottle bags and placed them into the second plastic bag, sealed them and returned them to the cooler. This procedure continued throughout the entire clean metal sampling, which included both total and dissolved fractions (dissolved fractions obtained by filtering with an in-line 0.45 micron filter). The conventional analysis parameters (nitrogen, oil and grease, fluorides, sulfide, phenolics, and cyanide) were collected after the clean metals samples were collected, by utilizing the same tubing and pump; however, the sample bottles were not placed within the sample box. Once Baker personnel began to collect the conventional samples, the Caribtec sampler began performing his required additional conventional sampling. The clean sampling team obtained split samples. One aliquot was sent via overnight courier to each clean laboratories (Battelle and Columbia).

Caribtec personnel utilized a peristaltic pump with Tygon® tubing that had one foot demarcated increments, and they would lower this tubing to the same depth to which the Baker tubing was lowered. As in the case with clean sampling procedures, the Caribtec representative would purge the tubing for one minute before filling sample bottles. Once sample bottles were filled, they were placed in a sample cooler. Samples for both total and dissolved inorganics were collected. The dissolved fraction was collected after passing it through an in-line 0.45 micron filter. After all the samples were collected, the Caribtec personnel would fill a one liter sample container and Baker personnel would collected water quality readings (pH, specific conductivity, turbidity, temperature, and dissolved oxygen). These readings were recorded in the field logbook. Caribtec was responsible for obtaining split samples for conventional laboratory analysis. One aliquot went to the Caribtec laboratory. The second was packed and sent via overnight courier to the Savannah Laboratory (the other conventional lab).

Upon completion of all of the clean metals and conventional sampling, the Teflon tubing was reeled up and placed within a plastic bag which in turn was placed within another plastic bag and placed in a sample cooler. Tubing was replaced on a daily basis, and rinsate blanks utilizing contaminant free laboratory grade distilled/ionized water were collected from each set of tubing every day before sea water samples were collected. Duplicate samples were collected at the rate of one out of ten environmental samples. A total of three duplicates and five rinsates were collected during this investigation.

2.4 Analytical Methods

Table 2-1 summarizes the analytical methods utilized by each laboratory. In general, the following analytical approaches were utilized:

- Flame Atomic Absorption
- Graphite Furnace Atomic Absorption
- Inductively Coupled Plasma (ICP)
- ICP – Mass Spectrometry (ICP-MS)

In the order presented, increasing lower detection limits are possible. Only the clean laboratories used the ICP-MS.

3.0 LABORATORY ANALYTICAL RESULTS AND COMPARISONS

This section presents the analytical data from each laboratory. A comparison of the two clean laboratory data sets as well as the two conventional laboratory data sets is provided first and then the clean laboratory data is compared to the conventional laboratory data. This is followed by a comparison of "clean" laboratory data to the applicable WQC. This comparison is followed by a comparison of the Bahia Salina del Sur results to the background data set. Finally, a comparison of performance sample analytical results is made between labs and against the known spiked quantities.

3.1 Analytical Results

This section of the report presents the results of laboratory analysis of the samples collected. A discussion of each laboratory's results is provided in terms of the methods used and the apparent success of each laboratory based on third party, independent, data validation and performance on various Quality Assurance/Quality Control (QA/QC) samples.

The section concludes with a discussion of the use of conventional analytical methods as opposed to those using the clean protocols.

3.1.1 Caribtec Results

Caribtec is a conventional laboratory located in San Juan, Puerto Rico that has provided analytical services for the NPDES monitoring at the AFWTF. Caribtec was one of two laboratories used to analyze samples collected using conventional procedures. Caribtec analytical results are provided in Table 3-1 and Table 3-2. Table 3-3 contains the analytical methods by EPA number. A review of the Caribtec data suggests that the laboratory was able to detect many of the constituents; however, many detections were estimated because values were below method detection limits as shown on Table 3-3.

3.1.2 Savannah Results

Savannah is a conventional laboratory located in Savannah, Georgia and was the other laboratory used to analyze samples collected using conventional procedures. Savannah's analytical results are provided in Table 3-1 and 3-2. Table 3-3 contains the analytical methods. A review of the

Savannah data suggests that the laboratory was not able to detect many of the constituents; however, the laboratory's detection limits generally were in accord with the expected method detection limits.

3.1.3 Discussion of Conventional Laboratory Results

3.1.3.1 General Observations

Both conventional laboratories provided the results that were generally expected. The methods used by the labs are not capable of detecting the trace metals found in seawater. Often, the detection limit of the methods are higher than the WQC. This is shown on Table 3-3 which compares the WQC to the method detection limits. Where they were able to achieve detection limits lower than the WQC, in some cases, the results of field blank analysis sometimes exceeded the WQC. These are the reasons that drove EPA to develop the clean sampling and analysis protocols.

Seawater was found to be an extremely difficult matrix for analysis by all the laboratories. Savannah had a particularly trying time as, in their diligence to reach the lowest possible detection limits, their equipment would be overwhelmed and need to be recalibrated.

Caribtec generally indicated lower detection limits than did Savannah. This is due to a number of factors including:

- Internal laboratory reporting criteria (e.g., Savannah will only report detection limits for metals at three to five times the method detection limit on this project due to this difficulty with the seawater matrix).
- More familiarity with the seawater matrix.
- Different analytical methods.

While this is the apparent case, WQC levels were not met by either laboratory.

3.1.3.2 Data Validation

All the analytical data generated by the conventional laboratories was validated by an independent, third-party, data validation firm. The results of the validation indicated the following observations:

1. Savannah data had a larger amount of rejected data than normally expected based on experience with other analytical programs and experience with this laboratory. The rejections were usually related to the difficulty of the seawater matrix.

2. A relatively large amount of data from both conventional laboratories was "J" flagged (estimated value). Both labs again found the seawater matrix to be difficult to manage using conventional analytical techniques. In addition, much of the Caribtec metals data was "J" flagged based on the professional judgement of the validator that the reported detection limits were lower than usually achievable by the method.

While these observations were made, the data was generally found to be acceptable for use by the validator.

3.1.3.3 Quality Assurance/Quality Control Samples

Three types of QA/QC samples were employed during the study:

- Field blanks
- Duplicate samples, and
- Performance evaluation (PE) samples

It should be noted that these QA/QC samples are in addition to those equipment blanks and method-mandated, laboratory-internal QA/QC samples.

Field Blanks

Field blanks are samples of distilled/deionized water that are placed in sampling containers during the field sampling using the same collection techniques and apparatus. The purpose of these samples is to allow an assessment to be made of whether sampling techniques or ambient

conditions at the time of sampling impact the environmental matrix samples. Caribtec took the field blanks for both conventional labs.

Table 3-4 contains the analytical results for all the laboratories. Table 3-5 provides the field sampling locations that were sampled on the day each field blank was collected.

Concentrations of cadmium, copper and lead were consistently detected in the field blanks by Caribtec at concentrations exceeding the WQC. Silver was sometimes detected by Caribtec at concentrations over the WQC. These findings were not duplicated by Savannah (the other conventional laboratory). Savannah did however, report a detection of zinc above the WQC in the field blank taken on 10/16/99. Caribtec also detected zinc in this sample but at a level well below the WQC. It is likely that Caribtec's consistent findings of exceedances are due to the limitations of Flame Atomic Absorption.

Both clean laboratories detected concentrations of metals in the field blanks. The detected constituents all occur at trace levels and do not exceed the WQC. Battelle was able to detect significantly more metals than Columbia and at lower levels. This is probably indicative of their greater familiarity with analysis of seawater and the clean analytical techniques.

Duplicate Samples

Duplicates are two samples obtained at the same time and place by splitting sampled water into two aliquots. When analyzed by the laboratory, the duplicate results provide an indication of the consistency and reproducibility of the laboratory data. Duplicate sample results are shown on Tables 3-1 and 3-2.

A review of the duplicate results for the conventional laboratories indicates that, overall reproducibility of data falls within expected ranges. In general, detected constituents were found at similar concentrations in both the field sample and duplicate. Non-detects were consistent between samples.

Performance Evaluation Samples

A PE sample is one that is spiked with a known concentration of various constituents and sent to a laboratory for analysis to see how close the laboratory can come to identifying the spiked

concentrations. A PE sample, purchased from the Institute for National Measurement Standards, National Research Council of Canada, was sent to each of the four laboratories for analysis. The results for both the conventional and clean laboratories for these samples are provided on Table 3-6.

In general, the conventional laboratories were unable to see the spiked concentrations in the PE samples because the detection limits of the methods used were well above the spiked concentrations.

The conventional laboratories did not compare well in terms of their results for the PE sample. Savannah was able to detect only one inorganic which was boron. The result compared well with clean labs but this was because, at approximately 4000 ug/l, the boron concentration was well above the detection limit. Caribtec provided detected results for many of the constituents but all the detections were "J" flagged by the validator since the detection limits reported were well below normal method detection limits for the conventional analysis technique.

Method Detection Limit (MDL) Study

A matrix-specific MDL study was performed by Savannah for this project. The MDLs for a laboratory are established for each analyte by analyzing a number of identical aliquots of water, comparing the results, and statistically calculating the MDLs. Savannah spiked their samples since the methods they used for analysis are generally unable to reach low enough detection limits.

Savannah generally showed some reproducibility of detections in quantifying the concentrations within a range across the seven aliqnots analyzed. Variation was present in the MDL study indicating that it is likely Savannah had problems with the seawater matrix. This fact was confirmed by Savannah's unwillingness to report detection limits for the environmental samples at or near the MDL (they reported detection limits three to five times the MDL depending on the constituent). This reporting convention, followed for this study, is a direct result of Savannah's lack of comfort with the seawater matrix.

3.1.4 Columbia Results

Columbia is a laboratory located in Kelso, Washington that provides clean analytical services as well as other analytical services. Columbia analytical results are provided in Table 3-1 and Table 3-2. Table 3-3 contains the analytical methods by EPA number. A review of the Columbia data suggests that the laboratory was able to detect constituents at relatively low levels, which was expected given their expertise and the use of specialized analytical methodologies. Table 3-3 also compares the detection limits to the WQC.

3.1.5 Battelle Results

Battelle is a laboratory located in Sequim, Washington that provides primarily clean analytical services. Battelle analytical results are provided in Table 3-1 and 3-2. Table 3-3 contains the analytical methods by EPA number. A review of the Battelle data suggests that the laboratory was able to detect constituents at relatively low levels, which was expected given their expertise and the use of specialized analytical methodologies. Table 3-3 also compares the detection limits to the WQC.

3.1.6 Discussion of Clean Laboratory Results

3.1.6.1 General Observations

Both the clean laboratories performed generally as expected since both have previous experience in the analysis of trace metals in seawater. The clean protocols use sophisticated analytical techniques (1600 series methods) that achieve much lower detection limits than are possible using the more conventional methods.

A comparison between the two clean laboratories reveals two apparent trends:

- The Columbia data detections are generally higher than Battelle detections (e.g., total arsenic, copper on Table 3-2). In some instances the Columbia data was an order of magnitude higher (e.g., total lead on Table 3-2).

- Battelle was able to detect certain metals that Columbia could not (e.g., total chromium and copper on Table 3-2).

This may by the result of Battelle's significantly greater experience in this type of work than Columbia's.

3.1.6.2 Data Validation

Independent, third-party data validation was performed on 100% of the clean laboratories' data packages. In general, the data was of highly acceptable quality and certainly within the range of expected performance. The reported concentration for numerous individual constituents were "J" flagged usually because the concentration could only be estimated at such low levels detected. Occasional data were rejected, usually because the QA/QC results from the laboratory internal program were outside of acceptable ranges. All the data qualifiers are shown with the results on all the tables.

3.1.6.3 Quality Assurance/Quality Control Samples

The same set of external QA/QC samples was used for the clean laboratories as those employed for the conventional labs. The only difference is that the clean sampling team obtained the QA/QC samples for the clean laboratories. Each of the three types of samples is discussed in the paragraphs that follow.

Field Blanks

Table 3-4 contains the analytical results for the field blanks. Table 3-5 provides the field sampling locations associated with each field blank.

The results of field blank analysis show that the sampling techniques did not impact the contents of the samples. Elevated concentrations of constituents and/or the presence of unexpected constituents were not encountered.

Duplicate Samples

The results of the duplicate sample analysis for the clean laboratories are provided on Tables 3-1 and 3-2.

A review of the duplicate results for the clean laboratories indicates that overall reproducibility of data falls within expected ranges. There initially appear to be larger variations in the clean data with concentrations differing between the two aliquots more than seen in the conventional lab data. This is because the clean labs were able to detect many more inorganic constituents at trace levels than the conventional labs. The variations seen in the clean data usually occur below conventional detection limits. What variations are present are within the same order of magnitude and are typical for data especially at the low detection limits attained by the clean laboratories.

Performance Evaluation Samples

As with the conventional labs, each clean laboratory was provided with a PE sample for analysis. The results of the analyses are provided on Table 3-6.

Battelle was able to reproduce the spiked concentrations for most metals within expected ranges. Columbia's results often validated Battelle's from the standpoint of agreeing with the concentration detected; however, for a number of constituents, Columbia failed to detect the spiked concentration. This difference is likely explained by the fact that Battelle has significantly more experience in (and actually assisted in the development of) the application of the clean analysis protocols. This resulted in Columbia's ability to detect some of the spiked concentrations but Battelles' increased ability to more closely mirror the PE sample contents.

Method Detection Limit Study

A matrix-specific MDL study was performed by Battelle for this project. The results of their study are provided on Table 3-7.

Battelle did not need to spike their MDL samples at the levels Savannah did since ICP-MS techniques are capable of detecting the trace levels expected in the sample matrix (seawater).

Variations in quantified concentrations within the 11 aliquots are present although in a very narrow range.

There are three general conclusions that can be drawn from the Battelle MDL study and its comparison to the one performed by Savannah:

1. Clean analytical techniques (ICP-MS) are superior to ICP or furnace methods in their ability to achieve lower detection limits.
2. The range seen in the analytical results for the 11 aliquots employed in the Battelle study indicate that the methods have natural variability sometimes of an order-of-magnitude.
3. The natural variability in the methods ability to reproduce results means that the quantified results of analytical data from environmental samples is influenced by the analytical method and may be higher or lower in concentration than the value stated.

3.1.7 Conclusions Regarding Analytical Approaches

The EPA developed the clean sampling and analysis protocols/methods specifically to address the problem of conventional techniques not being able to provide low enough detection limits. A comparison of Savannah's MDL to Battelle's shows dramatically the difference between conventional and clean analysis approaches. The ability of the clean methods to detect and quantify trace levels of metals is one to two orders-of-magnitude better than that of conventional methods. The Vieques Water Quality Study proved that the EPA has been successful. It is obvious that the clean approach is a superior in its ability to detect trace metals in seawater.

A second conclusion is that Battelle's experience with the protocols and the seawater matrix gave overall better results than those seen for Columbia. Columbia's work checked and validated Battelle's results by generally arriving at similar detections but not always near equal concentrations.

Based on these two conclusions, all comparisons between sample concentrations at differing locations will be made using only Battelle (clean) data. These comparisons are discussed in the subsections that follow.

3.2 Data Comparisons

There are three important qualitative comparisons that need to be made to as fully understand the findings of the study as possible. These are:

- Comparison of Bahia Salina del Sur data to the WQC (Section 3.2.1)
- Comparison of background data to the WQC (Section 3.2.2)
- Comparison of background data to Bahia Salina del Sur data (Section 3.2.3)

The importance of these comparisons is discussed below.

Four samples were taken in Bahia Salina del Sur. Historically, almost all the discharges of ordnance that did not reach the range have been to waters in the bay. Tables 3-8 and 3-9 provide the analytical data for the bay samples (total and dissolved). Tables 3-10 and 3-11 contain data statistics summaries for total and dissolved constituents. Information on these tables includes:

- Minimum detection limit found in dataset
- Maximum detection limit
- Minimum detected concentration
- Maximum detected concentration
- Frequency of detection, and;
- Location of maximum detection.

Eighteen samples make up the background dataset. Tables 3-12 and 3-13 contain the Battelle analytical results for the background total and dissolved constituents. Tables 3-14 and 3-15 provide data statistics summaries for total and dissolved constituents providing the same information as that developed for the bay samples.

Comparisons of the bay concentrations to the WQC is an important consideration. It is also important to compare background to WQC since it may well be that WQC are exceeded in ambient waters because of unique geological conditions on-shore or oceanic currents importing constituents. The possible presence of exceedances of standards in the bay may not be indicative of impact from Navy activities.

The background samples were obtained from locations that surround the perimeter of Vieques Island. The intent was to sample at locations where similar environments to those found in Bahia Salina de Sur (the bay) were present but where there were no Navy range activities (i.e., well away from the discharge of ordnance). Developing this database of background conditions allows meaningful comparisons to be made of quality inside and outside Bahia Salina del Sur (the bay).

The purpose of developing the two datasets is to ascertain if significant differences in water quality exist in the bay from that seen in ambient waters around the island. Should significant degradation exist in the bay, it may be indicative of impact from Navy activities.

Tables 3-16 and 3-17 provide the range of concentrations (total and dissolved) for each constituent in both the bay samples and the background. Also provided on these tables is the WQC to allow for comparisons to be made.

3.2.1 Comparison of Bay Samples to WQC

Total Constituents

Two of four samples taken in the bay contained concentrations of arsenic that exceeded the WQC. A third sample contained arsenic just below the WQC. The occurrence of arsenic is summarized below:

		Bay Samples		
WQC	**BKGND02**	**RW06**	**RW07**	**RW08**
1.4 µg/l	1.385 µg/l	1.11 µg/l	1.598	1.617 µg/l

It should be noted that the existing WQC for arsenic is being reassessed by EPA as stated in National Recommended Water Quality Criteria-Correction of April 1999.

The detection limits for cyanide and phenolics are above the WQC although within the same order-of-magnitude. Neither of these constituents were detected in bay samples.

Sulfide levels exceeded WQC in two of the four bay samples. The occurrence of sulfide is summarized below:

		Bay Samples		
WQC	**BKGND02**	**RW06**	**RW07**	**RW08**
0.002 mg/l	0.00115J mg/l	0.00166J mg/l	0.002295J mg/l	0.00278J mg/l

It should be noted that Battelle used an experimental method when analyzing for sulfide that included pre-concentration and extraction of sulfide followed by a colorometric test to calculate concentrations. Battelle switched to this method when they discovered that the contract laboratory that was doing their conventional analyses was not able to achieve as low a detection level as Battelle knew was possible. Personal communication with Dr. Eric Crecelius of Battelle indicated that Battelle does not have a high degree of confidence in the quantified numbers. He feels that they are accurate within a range of .003 mg/l.

Dissolved Constituents

Only copper and lead have established WQC for dissolved constituents. None of the bay samples exhibited concentrations of these constituents that exceeded WQC.

3.2.2 Comparison of Background Samples to WQC

Total Constituents

Three of the 18 background samples contained concentrations of arsenic that exceeded the WQC of 1.4 µg/l at levels of 1.485 µg/l (RW-05), 1.406 µg/l (SP-09) and 1.42 µg/l (SP-11).

The detection limits for cyanide and phenolics are above the WQC although within the same order-of-magnitude. Neither of these constituents were detected in any background sample.

Sulfide levels exceeded WQC in eight of the 13 background samples analyzed with the experimental method described in Section 3.2.1 (the other five samples were analyzed with the approved method and therefore had a detection limit greater than the WQC). Variance of concentration was extremely narrow.

Dissolved Constituents

Only copper and lead have established WQC for dissolved constituents. None of the background samples exhibited concentrations of these constituents that exceeded the WQC.

3.2.3 Bay to Background Comparison

The following total metals and conventional parameters in the bay were found to be within the range of concentrations in the background dataset:

- Barium
- Cadmium
- Chromium
- Copper
- Lead
- Manganese
- Silver
- Ammonia
- Sulfide, and
- Flouride

This would indicate that the bay waters and the waters outside the bay are not significantly different.

The following total metals and conventional parameters were not detected in the bay and/or background samples:

- Chromium VI
- Iron (detected in some background samples but not in any bay samples)
- Selenium
- Zinc (detected in some background samples but not in any bay samples)
- Cyanide
- Nitrate + Nitrite – N
- Oil and Grease (detected in some background samples but undetected in bay samples)

- Phenolics, and
- Color

Since these constituents were not detected, they obviously do not indicate water quality degradation.

The occurrence of the following total metal and conventional parameters did not fit a discernable pattern:

- Arsenic – the maximum detection of arsenic was found in a bay sample

- Boron – the entire range of boron concentrations in the bay was below the lowest concentration in the background, and

- Mercury – highest detection of mercury was found in the bay (only infinitesimally higher than top of background range)

Given the limited number of constituents falling into this category and the fact that variations are minimal, the bay does not appear impacted.

The information for the dissolved analyses shown essentially the same pattern. The following dissolved constituents all had ranges of bay concentrations falling within the range of background samples:

- Arsenic
- Cadmium
- Chromium
- Copper
- Lead
- Manganese, and
- Mercury

The following parameters were not detected in the bay and/or background datasets:

- Chromium VI
- Iron (detected in some background samples but not detected in any bay sample)
- Selenium, and
- Zinc (detected in some background samples but not detected in any bay sample)

The following dissolved metals did not occur in any apparent pattern:

- Barium – the low end of the ranges were comparable but the highest occurrence was located in the bay (although only higher by 0.01 ug/l)

- Boron – the entire range of boron occurrence in the bay samples was below the bottom of the background range, and

- Silver – the low end of the ranges were comparable but the highest occurrence (0.08 ug/l difference) was seen in the bay.

3.3 Statistical Comparisons

The data from the Vieques water quality study was subjected to a variety of statistical tests to see whether any statistically significant differences between the bay samples and the background samples could be identified. The following documents, in conjunction with best technical judgement, were utilized as guidance in applying the statistical tests:

- Guidance for Data Quality Assessment – Practical Methods for Data Analysis. USEPA QA/G9, QA97 Version, January 19998 (EPA/600-R-96-084)

- Procedural Guidance for Statistically Analyzing Environmental Background Data. Prepared by: SWDIV and EFA West of Naval Facilities Engineering Command, September 1998.

- Handbook for Statistical Analysis of Environmental Background Data. Prepared by SWDIV and EFA West of Naval Facilities Engineering Command, July 1999.

The results of the statistical tests is provided in Appendix C and discussed briefly below.

Battelle background surface water data were subjected to the W-Test to determine whether these data were obtained from underlying normal or lognormal distributions. The W-Test is recommended for testing whether data have a normal or lognormal (after log-transformation) distribution. Results of the W-Test were inconclusive for several constituents detected in both total and dissolved (filtered) surface water samples. As a result, background data sets were evaluated for outliers using the Dixon test. The Dixon test identified several outliers so these were censored from the background data set and the W-Test was run again to determine underlying distributions. Although censored data came closer to being normally distributed in nature, the results for several constituents were still outside of a normal distribution.

The T-Test was used to compare results from Bahia Salina del Sur surface water samples to censored background data. Because of the uncertainty associated with underlying distributions for both background surface water samples and Bahia Salina del Sur surface water samples the Wilcoxon Rank Sum Test was used to compare means of the two data sets. The background data set was not censored for this comparison because the Wilcoxon Rank Sum Test does not require a normal underlying distribution to compare two means as does the T-Test.

The general conclusion that was drawn from the statistical exercise was that no single statistical approach was fully appropriate for the dataset available from this study.

4.0 CONCLUSIONS

Four important conclusions can be drawn from the Vieques water quality study. These are:

1. The clean sampling and analysis techniques/methods provide superior results. "Noise" introduced by sampling methods is minimized using clean techniques in the field. ICP-MS methods in the laboratory provide much lower detection limits than are achievable using conventional methods. Most importantly, the detection limits of the clean methods are below the WQC which allows actual exceedance to be quantified and reduces the potential for false positive findings.

2. There are 15 constituents for which applicable WQC have been developed. Of these 15, only two (arsenic and sulfide) were detected in some samples at levels exceeding the WQC. There are a number of important considerations regarding these exceedances.

   - Exceedances only occurred sporadically exhibiting no discernable pattern.
   - Exceedances occurred in both Bahia Salina del Sur and background.
   - Total and dissolved arsenic were detected in all the samples (where analyzed) both from the bay and background and, where exceedances were not found, levels were within a few tenths of a microgram per liter of the WQC.
   - The existing WQC for arsenic is being reassessed by EPA.
   - Sulfide was detected in every sample analyzed by Battelle within a very narrow range of concentrations, some just above and some just below the WQC.
   - Sulfide was analyzed by an experimental method that apparently achieves detection limits well below those attainable by accepted methods.
   - Variability and exceedances of sulfide all were within the .003 mg/l that the laboratory indicates is their degree of confidence.

   These considerations indicate that arsenic and sulfide at levels bracketing the WQC are naturally occurring constituents of seawater in the Vieques Island environment.

3. Of the 15 applicable WQC, two constituents (phenolics and cyanide) have analytical method detection limits that are higher than the WQC. For this reason, it is not known whether exceedances occur; however, neither phenolics nor cyanide were detected in any

sample. The lack of any detection whatsoever would apparently indicate that phenolics and cyanide are not a problem either in the bay or around Vieques Island.

4. Comparison of background and bay data ranges indicated that the bay and background waters were essentially identical with no significant variations. Minor differences in individual constituents are likely the result of micro-environment variations.

   There is no single statistical approach for comparing bay to background data that is appropriate for the data available from this study. The variability within the populations was exceedingly small and this contributed to the difficulty when attempting to apply statistical tests.

5.0 RECOMMENDATIONS

Clean sampling and analysis techniques provide clearly superior results when compared to conventional techniques. Actual seawater conditions, especially related to trace metals concentrations, are much more accurately known using the clean methodologies. Based on these facts, it is recommended that future ambient water quality monitoring events should be conducted by skilled "clean" sampling teams with analysis performed by a laboratory experienced in clean protocols. Consistent use of the same laboratory is recommended so that data from any possible future sampling events can be directly compared. This will allow any trends with time to be detectable.

TABLES

QUALIFIER DEFINITIONS
VIEQUES WATER QUALITY
NAVY CLEAN CTO-0395

QUALIFIER DEFINITIONS

B = Not detected substantially above the level reported in laboratory or field blanks.
J = Analyte present. Reported value may not be accurate or precise.
R = Unreliable result. Analyte may or may not be present in the sample. Supporting data necessary to confirm result.
U = Not detected. The associated number indicates approximate sample concentration necessary to be detected.
NA = Not analyzed.

TABLE 3-1
SUMMARY OF ANALYTICAL DATA
VIEQUES WATER QUALITY STUDY
NAVY CLEAN CTO-0395

Sample Designation BKGND-02		Battelle		Columbia		Caribtec		Savannah	
Analyte	Units	Dissolved	Total	Dissolved	Total	Dissolved	Total	Dissolved	Total
Arsenic, ICP-MS/ICP-MS/GFAA/ICP	ug/l	1.228	1.385	2.2	1.8	1 U	1 U	100 U	100 U
Arsenic, GFAA	ug/l	NA	NA	NA	NA	NA	NA	100 UR	100 UR
Barium, ICP-MS/ICP-MS/GFAA/ICP	ug/l	7.32	7.728	13	14	10 UJ	10 UJ	800 U	800 U
Barium, FAA/GFAA	ug/l	NA	NA	NA	NA	10 UJ	10 UJ	NA	NA
Boron, ICP-MS/ICP-MS/Color/ICP	ug/l	3744	3840	4530	4650	200	210	4600 B	5000
Cadmium, ICP-MS/ICP-MS/FAA/ICP	ug/l	0.00516	0.00335	0.02 U	0.02 U	20	19	100 U	100 U
Chromium, ICP-MS/ICP-MS/GFAA/ICP	ug/l	0.2586	0.2763	10 U	10 U	1 UJ	1 UJ	300 U	300 U
Chromium, FAA/GFAA	ug/l	NA	NA	NA	NA	1 UJ	1 UJ	NA	NA
Chromium VI, ICP-MS/ICP-MS/GFAA/ICP	mg/l	0.00782 U	NA	0.05 R		0.001 U	NA	0.035 U	NA
Copper, ICP-MS/ICP-MS/GFAA/ICP	ug/l	0.1645	0.1755	0.3	0.3	220	200	58 U	58 U
Copper, GFAA	ug/l	NA	NA	NA	NA	NA	NA	2 UJ	2 UJ
Iron, ICP-MS/ICP-MS/FAA/ICP	ug/l	23.5 U	23.5 U	20 U	20 U	50	12	390 J	4000 U
Lead, ICP-MS/ICP-MS/GFAA/ICP	ug/l	0.00843	0.0098	0.03	0.15	10 UJ	10 UJ	170 U	170 U
Lead, FAA/GFAA	ug/l	NA	NA	NA	NA	10 UJ	10 UJ	NA	NA
Manganese, ICP-MS/ICP-MS/GFAA/ICP	ug/l	0.7106	0.8385	5 U	5 U	1 UJ	1 UJ	100 U	100 U
Manganese, FAA	ug/l	NA	NA	NA	NA	1 UJ	1 J	NA	NA
Mercury, ICP-MS/ICP-MS/GFAA/ICP	ug/l	0.00098	0.00145	5 U	5 U	0.1	0.3	0.2 U	0.2 U
Selenium, ICP-MS/ICP-MS/GFAA/ICP	ug/l	0.694 U	0.694 U	1 U	1 U	1 U	1 U	200 U	200 U
Silver, ICP-MS/ICP-MS/GFAA/ICP	ug/l	0.254 U	0.3281	0.1 U	0.1 U	1 U	1 U	40 U	11 B
Silver, FAA/GFAA	ug/l	NA	NA	NA	NA	1 U	1 U	10 UJ	10 UJ
Zinc, ICP-MS/ICP-MS/FAA/ICP	ug/l	0.342 UJ	0.342 UJ	10 U	10 U	43	13	1000 U	15 B
Ammonia as Nitrogen	mg/l	NA	0.015	NA	0.05 U	NA	0.1 U	NA	0.03 U
Color	PCU	NA	5 U	NA	5 U	NA	5	NA	5 U
Cyanide	mg/l	NA	0.005 U	NA	0.001 U	NA	0.005 U	NA	0.01 U
Fluoride	mg/l	NA	0.6	NA	0.7 J	NA	0.409	NA	5 U
Nitrate + Nitrite-N	mg/l	NA	0.01 U	NA	0.2 U	NA	0.01 U	NA	0.05 U
Oil & Grease	mg/l	NA	1.1 UJ	NA	5 U	NA	5 U	NA	2.1 J
Oxygen	mg/l	NA	NA	NA	NA	NA	8.13	NA	NA
Phenolics Recoverable	mg/l	NA	0.04 U	NA	0.01	NA	0.001 U	NA	0.03 UR
Battelle Sulfide (376.2 modified)	mg/l	NA	0.00115 J	NA	NA	NA	NA	NA	NA
Sulfide (376.2)	mg/l	NA	NA	NA	0.002 U	NA	0.003 U	NA	0.05 U
Temperature	C	NA	NA	NA	NA	NA	29.1	NA	NA
Total Kjeldahl Nitrogen-N	mg/l	NA	NA	NA	NA	NA	NA	NA	0.4 U
Turbidity	NTU	NA	NA	NA	0.1	NA	0.2	NA	0.15
pH	su	NA	NA	NA	NA	NA	8.2	NA	8.4

NA - Not Analyzed

TABLE 3-1
SUMMARY OF ANALYTICAL DATA
VIEQUES WATER QUALITY STUDY
NAVY CLEAN CTO-0395

Sample Designation RW-06		Battelle		Columbia		Caribtec		Savannah	
Analyte	Units	Dissolved	Total	Dissolved	Total	Dissolved	Total	Dissolved	Total
Arsenic, ICP-MS/ICP-MS/GFAA/ICP	ug/l	1.29	1.11	2.5	1.8	1 U	1 U	100 U	100 U
Arsenic, GFAA	ug/l	NA	NA	NA	NA	NA	NA	100 UR	100 UR
Barium, ICP-MS/ICP-MS/GFAA/ICP	ug/l	7.696	7.633	18	15	10 UJ	10 UJ	800 U	14 B
Barium, FAA/GFAA	ug/l	NA	NA	NA	NA	10 UJ	10 UJ	NA	NA
Boron, ICP-MS/ICP-MS/Color/ICP	ug/l	3926	3794	5080	4600	160	200	4700 B	5000
Cadmium, ICP-MS/ICP-MS/FAA/ICP	ug/l	0.00326	0.0114	0.03	0.02 U	30	32	100 U	100 U
Chromium, ICP-MS/ICP-MS/GFAA/ICP	ug/l	0.2551	0.2769	10 U	10 U	1 UJ	1 UJ	300 U	300 U
Chromium, FAA/GFAA	ug/l	NA	NA	NA	NA	1 UJ	1 UJ	NA	NA
Chromium VI, ICP-MS/ICP-MS/GFAA/I	ug/l	0.00782 U	0.00782 U	NA	0.05 R	0.001 U	0.001 U	0.035 U	NA
Copper, ICP-MS/ICP-MS/GFAA/ICP	ug/l	0.1612	0.1883	0.2	0.3	100	70	58 U	58 U
Copper, GFAA	ug/l	NA	NA	NA	NA	NA	NA	2 UJ	2 UJ
Iron, ICP-MS/ICP-MS/FAA/ICP	ug/l	23.5 U	23.5 U	20 U	20 U	210	40	370 J	4000 U
Lead, ICP-MS/ICP-MS/GFAA/ICP	ug/l	0.00793	0.01236	0.04	0.08	10 UJ	10 UJ	170 U	170 U
Lead, FAA/GFAA	ug/l	NA	NA	NA	NA	10 UJ	10 UJ	NA	NA
Manganese, ICP-MS/ICP-MS/GFAA/ICI	ug/l	0.726	0.6733	5 U	5 U	1 UJ	11 J	100 U	100 U
Manganese, FAA	ug/l	NA	NA	NA	NA	1 UJ	11 J	NA	NA
Mercury, ICP-MS/ICP-MS/GFAA/ICP	ug/l	0.00077	0.00063	5 U	5 U	0.2	0.5	0.2 U	0.2 U
Selenium, ICP-MS/ICP-MS/GFAA/ICP	ug/l	0.694 U	0.694 U	1 U	1 U	1 U	1 U	200 U	69 B
Silver, ICP-MS/ICP-MS/GFAA/ICP	ug/l	0.275	0.3519	0.1 U	0.1 U	1 U	1 U	18 B	40 U
Silver, FAA/GFAA	ug/l	NA	NA	NA	NA	1 U	1 U	10 UJ	10 UJ
Zinc, ICP-MS/ICP-MS/FAA/ICP	ug/l	0.342 UJ	0.342 UJ	10 U	10 U	19	17	1000 U	20 B
Ammonia as Nitrogen	mg/l	NA	0.011	NA	0.05 U	NA	0.1 U	NA	0.03 U
Color	PCU	NA	5 U	NA	5 U	NA	5	NA	5 U
Cyanide	mg/l	NA	0.005 U	NA	0.001 U	NA	0.005 U	NA	0.01 U
Fluoride	mg/l	NA	0.65	NA	0.2 J	NA	0.746	NA	5 U
Nitrate + Nitrite-N	mg/l	NA	0.01 U	NA	0.2 U	NA	0.01 U	NA	0.05 U
Oil & Grease	mg/l	NA	1.1 UJ	NA	5 U	NA	5 U	NA	2.1 J
Oxygen	mg/l	NA	NA	NA	NA	NA	5.31	NA	NA
Phenolics Recoverable	mg/l	NA	0.04 U	NA	0.02	NA	0.001 U	NA	0.03 UR
Battelle Sulfide (376.2 modified)	mg/l	NA	0.00166 J	NA	NA	NA	NA	NA	NA
Sulfide (376.2)	mg/l	NA	NA	NA	0.002 U	NA	0.003 U	NA	0.05 U
Temperature	C	NA	NA	NA	NA	NA	29.6	NA	NA
Total Kjeldahl Nitrogen-N	mg/l	NA	NA	NA	NA	NA	NA	NA	0.4 U
Turbidity	NTU	NA	NA	NA	0.1	NA	0.3	NA	0.16
pH	su	NA	NA	NA	NA	NA	8.1	NA	8.3

NA - Not Analyzed

TABLE 3-1
SUMMARY OF ANALYTICAL DATA
VIEQUES WATER QUALITY STUDY
NAVY CLEAN CTO-0395

Sample Designation RW-07		Battelle		Columbia		Caribtec		Savannah	
Analyte	Units	Dissolved	Total	Dissolved	Total	Dissolved	Total	Dissolved	Total
Arsenic, ICP-MS/ICP-MS/GFAA/ICP	ug/l	1.182	1.598	1.8	2.1	1 U	1 U	100 U	100 U
Arsenic, GFAA	ug/l	NA	NA	NA	NA	NA	NA	100 UR	100 UR
Barium, ICP-MS/ICP-MS/GFAA/ICP	ug/l	7.312	7.661	16	13	10 UJ	10 UJ	800 U	800 U
Barium, FAA/GFAA	ug/l	NA	NA	NA	NA	10 UJ	10 UJ	NA	NA
Boron, ICP-MS/ICP-MS/Color/ICP	ug/l	3746	3850	4860	4670	100 U	100	4600 B	5000
Cadmium, ICP-MS/ICP-MS/FAA/ICP	ug/l	0.00717	0.00603	0.02	0.02	35	19	100 U	100 U
Chromium, ICP-MS/ICP-MS/GFAA/ICP	ug/l	0.2532	0.2973	10 U	10 U	1 UJ	1 UJ	300 U	300 U
Chromium, FAA/GFAA	ug/l	NA	NA	NA	NA	1 UJ	1 UJ	NA	NA
Chromium VI, ICP-MS/ICP-MS/GFAA/I	ug/l	0.00782 U	0.00782 U	NA	0.05 R	0.001 U	0.001 U	0.035 U	NA
Copper, ICP-MS/ICP-MS/GFAA/ICP	ug/l	0.3838	0.4057	0.5	0.5	94	15	58 U	14 B
Copper, GFAA	ug/l	NA	NA	NA	NA	NA	NA	2 UJ	2 UJ
Iron, ICP-MS/ICP-MS/FAA/ICP	ug/l	23.5 U	23.5 U	20 U	20 U	200	85	4000 U	4000 U
Lead, ICP-MS/ICP-MS/GFAA/ICP	ug/l	0.01006	0.01674	0.09	0.15	10 UJ	10 UJ	170 U	170 U
Lead, FAA/GFAA	ug/l	NA	NA	NA	NA	10 UJ	10 UJ	NA	NA
Manganese, ICP-MS/ICP-MS/GFAA/ICI	ug/l	0.7415	0.7601	5 U	5 U	1 UJ	2400 J	100 U	100 U
Manganese, FAA	ug/l	NA	NA	NA	NA	1 UJ	2400 J	NA	NA
Mercury, ICP-MS/ICP-MS/GFAA/ICP	ug/l	0.00043	0.00048	5 U	5 U	0.1	0.7	0.2 U	0.2 U
Selenium, ICP-MS/ICP-MS/GFAA/ICP	ug/l	0.694 U	0.694 U	1 U	1 U	1 U	1 U	200 U	86 B
Silver, ICP-MS/ICP-MS/GFAA/ICP	ug/l	0.3575	0.4211	0.1 U	0.1 U	1 U	1 U	40 U	40 U
Silver, FAA/GFAA	ug/l	NA	NA	NA	NA	1 U	1 U	10 UJ	10 UJ
Zinc, ICP-MS/ICP-MS/FAA/ICP	ug/l	0.342 UJ	0.342 UJ	10 U	10 U	17	92	1000 U	230 B
Ammonia as Nitrogen	mg/l	NA	0.013	NA	0.05 U	NA	0.1 U	NA	0.055
Color	PCU	NA	5 U	NA	5 U	NA	5	NA	5 U
Cyanide	mg/l	NA	0.005 U	NA	0.001 U	NA	0.005 U	NA	0.01 U
Fluoride	mg/l	NA	0.68	NA	0.9	NA	0.561	NA	5 U
Nitrate + Nitrite-N	mg/l	NA	0.01 U	NA	0.2 U	NA	0.01 U	NA	0.05 U
Oil & Grease	mg/l	NA	1.1 UJ	NA	5 U	NA	5 U	NA	2.1 J
Oxygen	mg/l	NA	NA	NA	NA	NA	6.86	NA	NA
Phenolics Recoverable	mg/l	NA	0.04 U	NA	0.01 U	NA	0.001 U	NA	0.03 UR
Battelle Sulfide (376.2 modified)	mg/l	NA	0.00229 J	NA	NA	NA	NA	NA	NA
Sulfide (376.2)	mg/l	NA	NA	NA	0.002 U	NA	0.003 U	NA	0.05 U
Temperature	C	NA	NA	NA	NA	NA	31	NA	NA
Total Kjeldahl Nitrogen-N	mg/l	NA	NA	NA	NA	NA	NA	NA	0.4 U
Turbidity	NTU	NA	NA	NA	0.3	NA	0.3	NA	0.17
pH	su	NA	NA	NA	NA	NA	8.2	NA	8.4

NA - Not Analyzed

TABLE 3-1
SUMMARY OF ANALYTICAL DATA
VIEQUES WATER QUALITY STUDY
NAVY CLEAN CTO-0395

Sample Designation RW-07 Dup		Battelle		Columbia		Caribtec		Savannah	
Analyte	Units	Dissolved	Total	Dissolved	Total	Dissolved	Total	Dissolved	Total
Arsenic, ICP ICP-MS/ICP-MS/GFAA/ICP	ug/l	1.426	1.511	2.2	2	1 U	1 U	100 U	100 U
Arsenic, GFAA	ug/l	NA	NA	NA	NA	NA	NA	100 UR	100 UJ
Barium, ICP-MS/ICP-MS/GFAA/ICP	ug/l	7.443	7.502	12	12	10 UJ	400 J	800 U	800 U
Barium, FAA/GFAA	ug/l	NA	NA	NA	NA	10 UJ	400 J	NA	NA
Boron, ICP-MS/ICP-MS/Color/ICP	ug/l	3762	3834	4650	4580	110 U	100	4300 B	4900
Cadmium, ICP-MS/ICP-MS/FAA/ICP	ug/l	0.00599	0.0038	0.03	0.02 U	30	24	100 U	100 U
Cadmium, FAA/GFAA	ug/l	NA	NA	NA	NA	30	24	NA	NA
Chromium, ICP-MS/ICP-MS/GFAA/ICP	ug/l	0.2664	0.2949	10 U	10 U	1 UJ	1 UJ	300 U	300 U
Chromium, FAA/GFAA	ug/l	NA	NA	NA	NA	1 UJ	1 UJ	NA	NA
Chromium VI, ICP-MS/ICP-MS/GFAA/IC	ug/l	0.00782 U	0.00782 U	NA	0.05 R	0.001 U	0.001 U	0.035 U	NA
Copper, ICP-MS/ICP-MS/GFAA/ICP	ug/l	0.3551	0.3925	0.4	0.3	20	50	58 U	25 B
Copper, GFAA	ug/l	NA	NA	NA	NA	NA	NA	2 UJ	1.1 J
Iron, ICP-MS/ICP-MS/FAA/ICP	ug/l	23.5 U	23.5 U	20 U	20 U	260	120	4000 U	4000 U
Lead, ICP-MS/ICP-MS/GFAA/ICP	ug/l	0.01167	0.02041	0.06	0.03	10 UJ	10 UJ	170 U	170 U
Lead, FAA/GFAA	ug/l	NA	NA	NA	NA	10 UJ	10 UJ	NA	NA
Manganese, ICP-MS/ICP-MS/GFAA/ICP	ug/l	0.832	0.7517	5 U	5 U	1 UJ	2200 J	100 U	100 U
Manganese, FAA	ug/l	NA	NA	NA	NA	1 UJ	2200 J	NA	NA
Mercury, ICP-MS/ICP-MS/GFAA/ICP	ug/l	0.00034	0.00076	5 U	5 U	0.3	0.5	0.2 U	0.2 U
Selenium, ICP-MS/ICP-MS/GFAA/ICP	ug/l	0.694 U	0.694 U	1 U	1 U	1 U	1 U	200 U	200 U
Selenium, FAA/GFAA	ug/l	NA	NA	NA	NA	1 U	1 U	NA	NA
Silver, ICP-MS/ICP-MS/GFAA/ICP	ug/l	0.254 U	0.403	0.1 U	0.1 U	1 U	1 U	40 U	40 U
Silver, FAA/GFAA	ug/l	NA	NA	NA	NA	1 U	1 U	10 UJ	10 UJ
Zinc, ICP-MS/ICP-MS/FAA/ICP	ug/l	0.342 UJ	0.342 UJ	10 U	10 U	31	32	1000 U	28 B
Ammonia as Nitrogen	mg/l	NA	0.015	NA	0.05 U	NA	0.1 U	NA	0.03 U
Color	PCU	NA	5 U	NA	5 U	NA	5	NA	5 U
Cyanide	mg/l	NA	0.005 U	NA	0.001 U	NA	0.005 U	NA	0.01 U
Fluoride	mg/l	NA	0.68	NA	0.7	NA	0.794	NA	5 U
Nitrate + Nitrite-N	mg/l	NA	0.01 U	NA	0.2 U	NA	0.01 U	NA	0.05 U
Oil & Grease	mg/l	NA	1.2 J	NA	5 U	NA	5 U	NA	2.7 J
Oxygen	mg/l	NA	NA	NA	NA	NA	6.86	NA	NA
Phenolics Recoverable	mg/l	NA	0.04 U	NA	0.02	NA	0.001 U	NA	0.03 UR
Battelle Sulfide (376.2 modified)	mg/l	NA	0.00189 J	NA	NA	NA	NA	NA	NA
Sulfide (376.2)	mg/l	NA	NA	NA	0.002 U	NA	0.003 U	NA	0.05 U
Temperature	C	NA	NA	NA	NA	NA	31	NA	NA
Total Kjeldahl Nitrogen-N	mg/l	NA	NA	NA	NA	NA	NA	NA	0.4 U
Turbidity	NTU	NA	NA	NA	0.2	NA	0.4	NA	0.16
pH	su	NA	NA	NA	NA	NA	8.2	NA	8.4

NA - Not Analyzed

TABLE 3-1
SUMMARY OF ANALYTICAL DATA
VIEQUES WATER QUALITY STUDY
NAVY CLEAN CTO-0395

Sample Designation RW-08		Battelle		Columbia		Caribtec		Savannah	
Analyte	Units	Dissolved	Total	Dissolved	Total	Dissolved	Total	Dissolved	Total
Arsenic, ICP-MS/ICP-MS/GFAA/ICP	ug/l	1.018	1.617	1.8	1.8	1 UJ	1 UJ	100 U	100 U
Arsenic, GFAA	ug/l	NA	NA	NA	NA	NA	NA	100 UR	100 UR
Barium, ICP-MS/ICP-MS/GFAA/ICP	ug/l	7.478	7.633	16	14	NA	NA	800 U	800 U
Barium, FAA/FAA/GFAA	ug/l	NA	NA	NA	NA	115 J	349 J	NA	NA
Boron, ICP-MS/ICP-MS/Color/ICP	ug/l	3836	3767	4680	4750	140 J	200 J	4400 B	4800 B
Cadmium, ICP-MS/ICP-MS/FAA/ICP	ug/l	0.01163	0.00303	0.02 U	0.02 U	30 J	32 J	100 U	100 U
Chromium, ICP-MS/ICP-MS/GFAA/ICP	ug/l	0.2873	0.2874	10 U	10 U	NA	NA	300 U	300 U
Chromium, FAA/FAA/GFAA	ug/l	NA	NA	NA	NA	30 J	74 J	NA	NA
Chromium VI, ICP-MS/ICP-MS/GFAA/I	ug/l	0.00782 U	0.00782 U	NA	0.05 R	0.001 UJ	0.001 UJ	0.035 U	NA
Copper, ICP-MS/ICP-MS/GFAA/ICP	ug/l	0.1659	0.1995	0.2 U	0.3	8 J	10 J	58 U	25 B
Copper, GFAA	ug/l	NA	NA	NA	NA	NA	NA	2 UJ	2 UJ
Iron, ICP-MS/ICP-MS/FAA/ICP	ug/l	23.5 U	23.5 U	20 U	20 U	80 J	30 J	4000 U	4000 U
Lead, ICP-MS/ICP-MS/GFAA/ICP	ug/l	0.0097	0.01255	0.1	0.05	NA	NA	170 U	170 U
Lead, FAA/GFAA	ug/l	NA	NA	NA	NA	66 J	139 J	NA	NA
Manganese, ICP-MS/ICP-MS/GFAA/ICI	ug/l	0.579	0.6516	5 U	5 U	NA	NA	100 U	100 U
Manganese, FAA	ug/l	NA	NA	NA	NA	36 J	44 J	NA	NA
Mercury, ICP-MS/ICP-MS/GFAA/ICP	ug/l	0.00068	0.00105	5 U	5 U	0.1 J	0.7 J	0.2 U	0.2 U
Selenium, ICP-MS/ICP-MS/GFAA/ICP	ug/l	0.694 U	0.694 U	1 U	1 U	1 UJ	1 UJ	200 U	63 B
Silver, ICP-MS/ICP-MS/GFAA/ICP	ug/l	0.5777	0.5628	0.1 U	0.1	NA	NA	40 U	40 U
Silver, FAA/GFAA	ug/l	NA	NA	NA	NA	10 J	52 J	10 UJ	10 UJ
Zinc, ICP-MS/ICP-MS/FAA/ICP	ug/l	0.342 UJ	0.342 UJ	10 U	10 U	1 UJ	1 UJ	15 B	75 B
Ammonia as Nitrogen	mg/l	NA	0.013	NA	NA	NA	0.1 UJ	NA	0.03 U
Color	PCU	NA	5 U	NA	5 U	NA	5 J	NA	5 U
Cyanide	mg/l	NA	0.005 U	NA	0.01 U	NA	0.005 UJ	NA	0.01 U
Fluoride	mg/l	NA	0.65	NA	0.7	NA	0.516 J	NA	5 U
Nitrate + Nitrite-N	mg/l	NA	0.01 U	NA	NA	NA	0.01 UJ	NA	0.05 U
Oil & Grease	mg/l	NA	1.1 UJ	NA	5 U	NA	5 UJ	NA	2.5 J
Oxygen	mg/l	NA	NA	NA	NA	NA	8 J	NA	NA
Phenolics Recoverable	mg/l	NA	0.04 U	NA	0.01	NA	0.001 UJ	NA	0.03 UR
Battelle Sulfide (376.2 modified)	mg/l	NA	0.00278 J	NA	NA	NA	NA	NA	NA
Sulfide (376.2)	mg/l	NA	NA	NA	0.002 U	NA	0.003 J	NA	0.05 U
Temperature	C	NA	NA	NA	NA	NA	29.7 J	NA	NA
Total Kjeldahl Nitrogen-N	mg/l	NA	NA	NA	NA	NA	NA	NA	0.4 U
Turbidity	NTU	NA	NA	NA	0.1	NA	0.2 J	NA	0.15
pH	su	NA	NA	NA	NA	NA	8.1 J	NA	8.3

NA - Not Analyzed

TABLE 3-1
SUMMARY OF ANALYTICAL DATA
VIEQUES WATER QUALITY STUDY
NAVY CLEAN CTO-0395

Sample Designation BKGND-01		Battelle		Columbia		Caribtec		Savannah	
Analyte	Units	Dissolved	Total	Dissolved	Total	Dissolved	Total	Dissolved	Total
Arsenic, ICP-MS/ICP-MS/GFAA/ICP	ug/l	1.235	1.142	2.3	2.4	1 U	1 U	100 U	100 U
Arsenic, GFAA	ug/l	NA	NA	NA	NA	NA	NA	100 UR	100 UR
Barium, ICP-MS/ICP-MS/GFAA/ICP	ug/l	7.352	7.57	12	14	10 UJ	10 UJ	800 U	800 U
Barium, FAA/FAA/GFAA	ug/l	NA	NA	NA	NA	10 UJ	10 UJ	NA	NA
Boron, ICP-MS/ICP-MS/Color/ICP	ug/l	4144	4052	4680	4690	200	500	4600 B	5000
Cadmium, ICP-MS/ICP-MS/FAA/ICP	ug/l	0.00906	0.00505	0.02 U	0.03	40	50	100 U	100 U
Chromium, ICP-MS/ICP-MS/GFAA/ICP	ug/l	0.2547	0.2742	10 U	10 U	1 UJ	1 UJ	300 U	300 U
Chromium, FAA/GFAA	ug/l	NA	NA	NA	NA	1 UJ	1 UJ	NA	NA
Chromium VI, ICP-MS/ICP-MS/GFAA/I	ug/l	0.00782 U	0.00782 U	NA	0.05 R	0.001 U	0.001 U	0.035 U	NA
Copper, ICP-MS/ICP-MS/GFAA/ICP	ug/l	0.3697	0.1574	0.3	0.3	30	60	58 U	58 U
Copper, GFAA	ug/l	NA	NA	NA	NA	NA	NA	2 UJ	2 UJ
Iron, ICP-MS/ICP-MS/FAA/ICP	ug/l	23.5 U	23.5 U	20 U	20 U	210	330	4000 U	390 J
Lead, ICP-MS/ICP-MS/GFAA/ICP	ug/l	0.01772	0.01154	0.03	0.04 J	10 UJ	10 UJ	170 U	170 U
Lead, FAA/GFAA	ug/l	NA	NA	NA	NA	10 UJ	10 UJ	NA	NA
Manganese, ICP-MS/ICP-MS/GFAA/ICI	ug/l	0.6247	0.4484	5 U	5 U	1 UJ	1 UJ	100 U	100 U
Manganese, FAA	ug/l	NA	NA	NA	NA	1 UJ	1 UJ	NA	NA
Mercury, ICP-MS/ICP-MS/GFAA/ICP	ug/l	0.00087	0.00041	5 U	5 U	0.1 U	0.1 U	0.2 U	0.2 U
Selenium, ICP-MS/ICP-MS/GFAA/ICP	ug/l	0.694 U	0.694 U	1 U	1 U	1 U	1 U	200 U	200 U
Silver, ICP-MS/ICP-MS/GFAA/ICP	ug/l	0.254 U	0.254 U	0.1 U	0.1 U	1 U	1 U	40 U	40 U
Silver, FAA/GFAA	ug/l	NA	NA	NA	NA	1 U	1 U	10 UJ	10 UJ
Zinc, ICP-MS/ICP-MS/FAA/ICP	ug/l	1.564 J	0.768 J	10 U	17	1 U	1 U	26 B	1000 U
Ammonia as Nitrogen	mg/l	NA	0.012	NA	0.05 U	NA	0.1 U	NA	0.038
Color	PCU	NA	5 U	NA	5 U	NA	5	NA	5 U
Cyanide	mg/l	NA	0.005 U	NA	0.001 U	NA	0.005 U	NA	0.01 U
Fluoride	mg/l	NA	0.67	NA	1	NA	0.482	NA	5 U
Nitrate + Nitrite-N	mg/l	NA	0.01 U	NA	0.2 U	NA	0.01 U	NA	0.05 U
Oil & Grease	mg/l	NA	1 U	NA	6	NA	5 U	NA	2.5 U
Oxygen	mg/l	NA	NA	NA	NA	NA	5.6	NA	NA
Phenolics Recoverable	mg/l	NA	0.04 U	NA	0.01 U	NA	0.001 U	NA	0.03 U
Sulfide (376.2)	mg/l	NA	0.05 U	NA	0.002 U	NA	0.003 U	NA	0.05 U
Temperature	C	NA	NA	NA	NA	NA	28.1	NA	NA
Total Kjeldahl Nitrogen-N	mg/l	NA	NA	NA	NA	NA	NA	NA	0.2 U
Turbidity	NTU	NA	NA	NA	0.1	NA	0.2	NA	0.14
pH	su	NA	NA	NA	NA	NA	8.2	NA	8.4

NA - Not Analyzed

TABLE 3-1
SUMMARY OF ANALYTICAL DATA
VIEQUES WATER QUALITY STUDY
NAVY CLEAN CTO-0395

Sample Designation BKGND-03		Battelle		Columbia		Caribtec		Savannah	
Analyte	Units	Dissolved	Total	Dissolved	Total	Dissolved	Total	Dissolved	Total
Arsenic, ICP-MS/ICP-MS/GFAA/ICP	ug/l	NA	NA	2.3	1.9	1 U	1 U	100 U	100 U
Arsenic, GFAA	ug/l	NA	NA	NA	NA	NA	NA	100 UR	100 UR
Barium, ICP-MS/ICP-MS/GFAA/ICP	ug/l	NA	NA	19	12	10 UJ	10 UJ	9.5 B	800 U
Boron, ICP-MS/ICP-MS/Color/ICP	ug/l	NA	NA	5110	4550	500	300	5000	4900
Cadmium, ICP-MS/ICP-MS/FAA/ICP	ug/l	NA	NA	0.02	0.02 U	35	67	100 U	100 U
Chromium, ICP-MS/ICP-MS/GFAA/ICP	ug/l	NA	NA	10 U	10 U	1 UJ	1 UJ	300 U	300 U
Chromium VI, ICP-MS/ICP-MS/GFAA/ICP	ug/l	NA	NA	NA	0.05 R	0.001 U	0.001 U	0.035 U	NA
Copper, ICP-MS/ICP-MS/GFAA/ICP	ug/l	NA	NA	0.3	0.2 U	7	60	58 U	58 U
Copper, GFAA	ug/l	NA	NA	NA	NA	NA	NA	2 UJ	2 UJ
Iron, ICP-MS/ICP-MS/FAA/ICP	ug/l	NA	NA	20 U	20 U	40	21	400 J	4000 U
Lead, ICP-MS/ICP-MS/GFAA/ICP	ug/l	NA	NA	0.12	0.07	10 UJ	10 UJ	170 U	170 U
Manganese, ICP-MS/ICP-MS/GFAA/ICP	ug/l	NA	NA	5 U	5 U	1 UJ	1 UJ	100 U	100 U
Mercury, ICP-MS/ICP-MS/GFAA/ICP	ug/l	NA	NA	5 U	5 U	1 U	1 U	0.2 U	0.2 U
Selenium, ICP-MS/ICP-MS/GFAA/ICP	ug/l	NA	NA	1 U	1 U	1 U	1 U	100 B	94 B
Silver, ICP-MS/ICP-MS/GFAA/ICP	ug/l	NA	NA	0.1 U	0.1 U	1 U	1 U	40 U	40 U
Silver, FAA/GFAA	ug/l	NA	NA	NA	NA	1 U	1 U	10 UJ	10 UJ
Zinc, ICP-MS/ICP-MS/FAA/ICP	ug/l	NA	NA	10 U	10 U	10 U	88	39 B	120 B
Ammonia as Nitrogen	mg/l	NA	0.01	NA	0.05 U	NA	0.1 U	NA	0.03 U
Color	PCU	NA	5 U	NA	5 U	NA	5	NA	5 U
Cyanide	mg/l	NA	0.005 U	NA	0.001 U	NA	0.005 U	NA	0.01 U
Fluoride	mg/l	NA	0.6	NA	0.7	NA	0.715	NA	5 U
Nitrate + Nitrite-N	mg/l	NA	0.01 U	NA	0.2 U	NA	0.01 U	NA	0.05 U
Oil & Grease	mg/l	NA	1 UJ	NA	5 U	NA	5 U	NA	2.7 J
Oxygen	mg/l	NA	NA	NA	NA	NA	8.1	NA	NA
Phenolics Recoverable	mg/l	NA	0.04 U	NA	0.01	NA	0.001 U	NA	0.03 UR
Battelle Sulfide (376.2 modified)	mg/l	NA	0.00287 J	NA	NA	NA	NA	NA	NA
Sulfide (376.2)	mg/l	NA	0.05	NA	0.002 U	NA	0.003	NA	0.05 U
Temperature	C	NA	NA	NA	NA	NA	30.2	NA	NA
Total Kjeldahl Nitrogen-N	mg/l	NA	NA	NA	NA	NA	NA	NA	0.4 U
Turbidity	NTU	NA	NA	NA	0.2	NA	0.3	NA	0.18
pH	su	NA	NA	NA	NA	NA	8.2	NA	8.4

NA - Not Analyzed

TABLE 3-1
SUMMARY OF ANALYTICAL DATA
VIEQUES WATER QUALITY STUDY
NAVY CLEAN CTO-0395

Sample Designation BKGND-04		Battelle		Columbia		Caribtec		Savannah	
Analyte	Units	Dissolved	Total	Dissolved	Total	Dissolved	Total	Dissolved	Total
Arsenic, ICP-MS/ICP-MS/GFAA/ICP	ug/l	1.238	1.304	3	1.7	1 U	1 U	100 U	100 U
Arsenic, GFAA	ug/l	NA	NA	NA	NA	NA	NA	100 UR	28 J
Barium, ICP-MS/ICP-MS/GFAA/ICP	ug/l	7.55	7.731	17	14	10 UJ	10 UJ	800 U	10 B
Barium, FAA/GFAA	ug/l	NA	NA	NA	NA	10 UJ	10 UJ	NA	NA
Boron, ICP-MS/ICP-MS/Color/ICP	ug/l	4642	4663	5090	4790	500	500	4700 J	4900
Cadmium, ICP-MS/ICP-MS/FAA/ICP	ug/l	0.00608	0.00534	0.03	0.03	30	50	100 U	100 U
Chromium, ICP-MS/ICP-MS/GFAA/ICP	ug/l	0.2933	0.3116	10 U	10 U	1 UJ	1 UJ	300 U	300 U
Chromium, FAA/GFAA	ug/l	NA	NA	NA	NA	1 UJ	1 UJ	NA	NA
Chromium VI, ICP-MS/ICP-MS/GFAA/ICP	ug/l	0.00782 U	0.00782 U	NA	0.05 R	0.001 U	0.001 U	0.007 U	NA
Copper, ICP-MS/ICP-MS/GFAA/ICP	ug/l	0.4189	0.5057	0.5	0.7	170	580	58 U	58 U
Copper, GFAA	ug/l	NA	NA	NA	NA	NA	NA	2 U	1.8 B
Iron, ICP-MS/ICP-MS/FAA/ICP	ug/l	32.44	55.52	20 U	63	280	300	4000 U	4000 U
Lead, ICP-MS/ICP-MS/GFAA/ICP	ug/l	0.0911	0.2643	0.5	0.53 J	10 UJ	10 UJ	170 U	170 U
Lead, FAA/GFAA	ug/l	NA	NA	NA	NA	10 UJ	10 UJ	NA	NA
Manganese, ICP-MS/ICP-MS/GFAA/ICP	ug/l	1.246	2.215	5 U	5 U	1 UJ	1 UJ	100 U	100 U
Manganese, FAA	ug/l	NA	NA	NA	NA	1 UJ	1 UJ	NA	NA
Mercury, ICP-MS/ICP-MS/GFAA/ICP	ug/l	0.00048	0.00123	5 U	5 U	0.3 U	0.3 U	0.2 U	0.2 U
Selenium, ICP-MS/ICP-MS/GFAA/ICP	ug/l	0.694 U	0.694 U	1 U	1 U	1 U	1 U	200 U	200 U
Silver, ICP-MS/ICP-MS/GFAA/ICP	ug/l	0.254 U	0.254 U	0.1 U	0.1	1	4	40 U	40 U
Silver, FAA/GFAA	ug/l	NA	NA	NA	NA	1	4	10 UJ	10 UJ
Zinc, ICP-MS/ICP-MS/FAA/ICP	ug/l	1.466 J	0.9056 J	10 U	10 U	1 U	1 U	140 B	89 B
Ammonia as Nitrogen	mg/l	NA	0.012	NA	0.05 U	NA	0.1 U	NA	0.027 B
Color	PCU	NA	5 U	NA	5 U	NA	5	NA	5
Cyanide	mg/l	NA	0.005 U	NA	0.001 U	NA	0.005 U	NA	0.01 U
Fluoride	mg/l	NA	0.67	NA	0.8	NA	0.376	NA	5 U
Nitrate + Nitrite-N	mg/l	NA	0.01 U	NA	0.2 U	NA	0.01 U	NA	5 U
Oil & Grease	mg/l	NA	1 U	NA	5 U	NA	5 U	NA	2.5 U
Oxygen	mg/l	NA	NA	NA	NA	NA	6.83	NA	NA
Phenolics Recoverable	mg/l	NA	0.04 U	NA	0.01 U	NA	0.001 U	NA	0.032 J
Sulfide (376.2)	mg/l	NA	0.05 U	NA	0.01	NA	0.003	NA	0.05 UJ
Temperature	C	NA	NA	NA	NA	NA	29.1	NA	NA
Total Kjeldahl Nitrogen-N	mg/l	NA	NA	NA	NA	NA	NA	NA	0.24 J
Turbidity	NTU	NA	NA	NA	0.9	NA	0.2	NA	1.7
pH	su	NA	NA	NA	NA	NA	8.5	NA	7.9

NA - Not Analyzed

TABLE 3-1
SUMMARY OF ANALYTICAL DATA
VIEQUES WATER QUALITY STUDY
NAVY CLEAN CTO-0395

Sample Designation RW-01		Battelle		Columbia		Caribtec		Savannah	
Analyte	Units	Dissolved	Total	Dissolved	Total	Dissolved	Total	Dissolved	Total
Arsenic, ICP-MS/ICP-MS/GFAA/ICP	ug/l	1.275	1.15	2.5	1.9	1 U	1 U	100 U	100 U
Arsenic, GFAA	ug/l	NA	NA	NA	NA	NA	NA	100 UR	100 UR
Barium, ICP-MS/ICP-MS/GFAA/ICP	ug/l	7.383	7.542	16	15	10 UJ	10 UJ	800 U	800 U
Barium, FAA/GFAA	ug/l	NA	NA	NA	NA	10 UJ	10 UJ	NA	NA
Boron, ICP-MS/ICP-MS/Color/ICP	ug/l	4701	4647	4760	4870	200	200	4800 B	5100
Cadmium, ICP-MS/ICP-MS/FAA/ICP	ug/l	0.00299 U	0.00681	0.02 U	0.02	40	50	100 U	100 U
Chromium, ICP-MS/ICP-MS/GFAA/ICP	ug/l	0.2723	0.2445	10 U	10 U	1 UJ	1 UJ	300 U	300 U
Chromium, FAA/GFAA	ug/l	NA	NA	NA	NA	1 UJ	1 UJ	NA	NA
Chromium VI, ICP-MS/ICP-MS/GFAA/I	ug/l	0.00782 U	0.00782 U	NA	0.05 R	0.001 U	0.001 U	0.035 U	NA
Copper, ICP-MS/ICP-MS/GFAA/ICP	ug/l	0.3059	0.1655	0.2 U	0.5	30	50	58 U	58 U
Copper, GFAA	ug/l	NA	NA	NA	NA	NA	NA	0.2 UJ	2 UJ
Iron, ICP-MS/ICP-MS/FAA/ICP	ug/l	23.5 U	23.5 U	20 U	20 U	330	370	4000 U	4000 U
Lead, ICP-MS/ICP-MS/GFAA/ICP	ug/l	0.00946	0.013	0.04	0.03 J	10 UJ	10 UJ	170 U	170 U
Lead, FAA/GFAA	ug/l	NA	NA	NA	NA	10 UJ	10 UJ	NA	NA
Manganese, ICP-MS/ICP-MS/GFAA/ICI	ug/l	0.5753	0.583	5 U	5 U	1 UJ	22 J	100 U	100 U
Manganese, FAA	ug/l	NA	NA	NA	NA	1 UJ	22 J	NA	NA
Mercury, ICP-MS/ICP-MS/GFAA/ICP	ug/l	0.00039	0.0005	5 U	5 U	0.1 U	0.1 U	0.2 U	0.2 U
Selenium, ICP-MS/ICP-MS/GFAA/ICP	ug/l	0.694 U	0.694 U	1 U	1 U	1 U	1 U	59 B	68 B
Silver, ICP-MS/ICP-MS/GFAA/ICP	ug/l	0.2553	0.254 U	0.1	0.1 U	1 U	1	40 U	40 U
Silver, FAA/GFAA	ug/l	NA	NA	NA	NA	1 U	1	10 UJ	0.75 J
Zinc, ICP-MS/ICP-MS/FAA/ICP	ug/l	1.162 J	1.373 J	10 U	10 U	1 U	1 U	27 B	1000 U
Ammonia as Nitrogen	mg/l	NA	0.011	NA	0.05 U	NA	0.1 U	NA	0.053
Color	PCU	NA	5 U	NA	5 U	NA	5	NA	5 U
Cyanide	mg/l	NA	0.005 U	NA	0.001 U	NA	0.005 U	NA	0.01 U
Fluoride	mg/l	NA	0.64	NA	0.9	NA	0.596	NA	5 U
Nitrate + Nitrite-N	mg/l	NA	0.01 U	NA	0.2 U	NA	0.01 U	NA	0.05 U
Oil & Grease	mg/l	NA	1 U	NA	5	NA	5 U	NA	2.5 U
Oxygen	mg/l	NA	NA	NA	NA	NA	6.9	NA	NA
Phenolics Recoverable	mg/l	NA	0.04 U	NA	0.01 U	NA	0.001 U	NA	0.03 U
Sulfide (376.2)	mg/l	NA	0.05 U	NA	0.002	NA	0.003	NA	0.05 U
Temperature	C	NA	NA	NA	NA	NA	27.25	NA	NA
Total Kjeldahl Nitrogen-N	mg/l	NA	NA	NA	NA	NA		NA	0.4 U
Turbidity	NTU	NA	NA	NA	0.2	NA	0.3	NA	0.21
pH	su	NA	NA	NA	NA	NA	6.91	NA	8.3

NA - Not Analyzed

TABLE 3-1
SUMMARY OF ANALYTICAL DATA
VIEQUES WATER QUALITY STUDY
NAVY CLEAN CTO-0395

Sample Designation RW-01 Dup		Battelle		Columbia		Caribtec		Savannah	
Analyte	Units	Dissolved	Total	Dissolved	Total	Dissolved	Total	Dissolved	Total
Arsenic, ICP-MS/ICP-MS/GFAA/ICP	ug/l	1.336	1.206	2.5	1.8	1 U	1 U	100 U	100 U
Arsenic, GFAA	ug/l	NA	NA	NA	NA	NA	NA	10 UR	100 UR
Barium, ICP-MS/ICP-MS/GFAA/ICP	ug/l	7.097	7.495	20	15	10 UJ	10 J	800 U	800 U
Barium, FAA/GFAA	ug/l	NA	NA	NA	NA	10 UJ	10 J	NA	NA
Boron, ICP-MS/ICP-MS/Color/ICP	ug/l	4663	4525	4960	4730	200	200	4800 B	5000
Cadmium, ICP-MS/ICP-MS/FAA/ICP	ug/l	0.00622	0.00539	0.02 U	0.02	40	40	100 U	100 U
Chromium, ICP-MS/ICP-MS/GFAA/ICP	ug/l	0.2743	0.2522	10 U	10 U	1 UJ	1 UJ	300 U	300 U
Chromium, FAA/GFAA	ug/l	NA	NA	NA	NA	1 UJ	1 UJ	NA	NA
Chromium VI, ICP-MS/ICP-MS/GFAA/I	ug/l	0.00782 U	0.00782 U	NA	0.05 R	0.001 U	0.001 U	0.035 U	NA
Copper, ICP-MS/ICP-MS/GFAA/ICP	ug/l	0.2597	0.158	0.3	0.3	20	30	58 U	58 U
Copper, GFAA	ug/l	NA	NA	NA	NA	NA	NA	0.2 UJ	2 UJ
Iron, ICP-MS/ICP-MS/FAA/ICP	ug/l	23.5 U	23.5 U	20 U	20 U	60	540	4000 U	450 J
Lead, ICP-MS/ICP-MS/GFAA/ICP	ug/l	0.00889	0.01107	0.04	0.04 J	10 UJ	10 UJ	170 U	170 U
Lead, FAA/GFAA	ug/l	NA	NA	NA	NA	10 UJ	10 UJ	NA	NA
Manganese, ICP-MS/ICP-MS/GFAA/ICI	ug/l	0.6075	0.6038	5 U	5 U	1 UJ	1 UJ	100 U	100 U
Manganese, FAA	ug/l	NA	NA	NA	NA	1 UJ	1 UJ	NA	NA
Mercury, ICP-MS/ICP-MS/GFAA/ICP	ug/l	0.0006	0.00049	5 U	5 U	0.2	0.7	0.2 U	0.2 U
Selenium, ICP-MS/ICP-MS/GFAA/ICP	ug/l	0.694 U	0.694 U	1 U	1 U	1 U	1 U	200 U	200 U
Silver, ICP-MS/ICP-MS/GFAA/ICP	ug/l	0.254 U	0.254 U	0.1	0.1 U	1 U	1 U	40 U	40 U
Silver, FAA/GFAA	ug/l	NA	NA	NA	NA	1 U	1 U	10 UJ	10 UJ
Zinc, ICP-MS/ICP-MS/FAA/ICP	ug/l	2.118 J	0.8674 J	10 U	10 U	1 U	1 U	36 B	1000 U
Ammonia as Nitrogen	mg/l	NA	0.013	NA	0.05 U	NA	0.1	NA	0.018 B
Color	PCU	NA	5 U	NA	5 U	NA	5	NA	5 U
Cyanide	mg/l	NA	0.005 U	NA	0.001 U	NA	0.005 U	NA	0.01 U
Fluoride	mg/l	NA	0.67	NA	0.8	NA	0.609	NA	5 U
Nitrate + Nitrite-N	mg/l	NA	0.01 U	NA	0.2 U	NA	0.01 U	NA	0.05 U
Oil & Grease	mg/l	NA	1 U	NA	5 U	NA	5 U	NA	2.5 U
Oxygen	mg/l	NA	NA	NA	NA	NA	6.9	NA	NA
Phenolics Recoverable	mg/l	NA	0.04 U	NA	0.02	NA	0.001 U	NA	0.03 U
Sulfide (376.2)	mg/l	NA	0.05 U	NA	0.002	NA	0.003 U	NA	0.05 U
Temperature	C	NA	NA	NA	NA	NA	27.26	NA	NA
Total Kjeldahl Nitrogen-N	mg/l	NA	NA	NA	NA	NA	NA	NA	0.4 U
Turbidity	NTU	NA	NA	NA	0.2	NA	0.3	NA	0.2
pH	su	NA	NA	NA	NA	NA	6.94	NA	8.3

NA - Not Analyzed

TABLE 3-1
SUMMARY OF ANALYTICAL DATA
VIEQUES WATER QUALITY STUDY
NAVY CLEAN CTO-0395

Sample Designation RW-02		Battelle		Columbia		Caribtec		Savannah	
Analyte	Units	Dissolved	Total	Dissolved	Total	Dissolved	Total	Dissolved	Total
Arsenic, ICP-MS/ICP-MS/GFAA/ICP	ug/l	1.16	1.293	2.2	2.1	1 U	1 U	100 U	100 U
Arsenic, GFAA	ug/l	NA	NA	NA	NA	NA	NA	10 UR	100 UR
Barium, ICP-MS/ICP-MS/GFAA/ICP	ug/l	7.317	7.413	16	14	10 UJ	10 UJ	800 U	800 U
Barium, FAA/GFAA	ug/l	NA	NA	NA	NA	10 UJ	10 UJ	NA	NA
Boron, ICP-MS/ICP-MS/Color/ICP	ug/l	4158	4133	4800	4680	200	200	4800 B	4900
Boron, FAA/GFAA	ug/l	NA	NA	NA	NA	200	200	NA	NA
Cadmium, ICP-MS/ICP-MS/FAA/ICP	ug/l	0.00367	0.00698	1.29	0.02	30	50	100 U	100 U
Chromium, ICP-MS/ICP-MS/GFAA/ICP	ug/l	0.2504	0.2583	10 U	10 U	1 UJ	1 UJ	300 U	300 U
Chromium, FAA/GFAA	ug/l	NA	NA	NA	NA	1 UJ	1 UJ	NA	NA
Chromium VI, ICP-MS/ICP-MS/GFAA/I	ug/l	0.00782 U	0.00782 U	NA	0.05 R	0.001 U	0.001 U	0.035 U	NA
Copper, ICP-MS/ICP-MS/GFAA/ICP	ug/l	0.2399	0.1755	0.3	0.3	30	60	58 U	58 U
Copper, GFAA	ug/l	NA	NA	NA	NA	NA	NA	0.2 UJ	2 UJ
Iron, ICP-MS/ICP-MS/FAA/ICP	ug/l	23.5 U	23.5 U	20 U	20 U	120	360	4000 U	4000 U
Lead, ICP-MS/ICP-MS/GFAA/ICP	ug/l	0.00724	0.00977	0.03	0.03 J	10 UJ	10 UJ	170 U	170 U
Lead, FAA/GFAA	ug/l	NA	NA	NA	NA	10 UJ	10 UJ	NA	NA
Manganese, ICP-MS/ICP-MS/GFAA/ICI	ug/l	0.5816	0.3977	5 U	5 U	1 UJ	1 UJ	100 U	100 U
Manganese, FAA	ug/l	NA	NA	NA	NA	1 UJ	1 UJ	NA	NA
Mercury, ICP-MS/ICP-MS/GFAA/ICP	ug/l	0.00045	0.00056	NA	5 U	0.1 U	0.7	0.2 U	0.2 U
Selenium, ICP-MS/ICP-MS/GFAA/ICP	ug/l	0.694 U	0.694 U	1 U	1 U	1 U	1 U	84 B	200 U
Silver, ICP-MS/ICP-MS/GFAA/ICP	ug/l	0.254 U	0.254 U	0.1 U	0.1 U	1 U	1 U	40 U	40 U
Silver, FAA/GFAA	ug/l	NA	NA	NA	NA	1 U	1 U	10 UJ	10 UJ
Zinc, ICP-MS/ICP-MS/FAA/ICP	ug/l	0.9976 J	0.342 UJ	10 U	10 U	1 U	1 U	30 B	1000 U
Ammonia as Nitrogen	mg/l	NA	0.014	NA	0.05 U	NA	0.1 U	NA	0.016 B
Color	PCU	NA	5 U	NA	5 U		5	NA	5 U
Cyanide	mg/l	NA	0.005 U	NA	0.001 U	NA	0.005 U	NA	0.01 U
Fluoride	mg/l	NA	0.67	NA	1	NA	0.667	NA	5 U
Nitrate + Nitrite-N	mg/l	NA	0.01 U	NA	0.2 U	NA	0.01 U	NA	0.05 U
Oil & Grease	mg/l	NA	1 U	NA	6	NA	5 U	NA	2.5 U
Oxygen	mg/l	NA	NA	NA	NA	NA	6.71	NA	NA
Phenolics Recoverable	mg/l	NA	0.04 U	NA	0.02	NA	0.001 U	NA	0.03 U
Sulfide (376.2)	mg/l	NA	0.05 U	NA	0.002 U	NA	0.003	NA	0.05 U
Temperature	C	NA	NA	NA	NA	NA	27	NA	NA
Total Kjeldahl Nitrogen-N	mg/l	NA	NA	NA	NA	NA	NA	NA	0.4 U
Turbidity	NTU	NA	NA	NA	0.2	NA	0.3	NA	0.19
pH	su	NA	NA	NA	NA	NA	8.2	NA	8.3

NA - Not Analyzed

TABLE 3-1
SUMMARY OF ANALYTICAL DATA
VIEQUES WATER QUALITY STUDY
NAVY CLEAN CTO-0395

Sample Designation RW-03		Battelle		Columbia		Caribtec		Savannah	
Analyte	Units	Dissolved	Total	Dissolved	Total	Dissolved	Total	Dissolved	Total
Arsenic, ICP-MS/ICP-MS/GFAA/ICP	ug/l	1.305	1.004	2.9	1.8	1 U	1 U	100 U	100 U
Arsenic, GFAA	ug/l	NA	NA	NA	NA	NA	NA	100 UR	100 UR
Barium, ICP-MS/ICP-MS/GFAA/ICP	ug/l	7.218	7.517	16	15	10 UJ	10 UJ	800 U	800 U
Barium, FAA/GFAA	ug/l	NA	NA	NA	NA	10 UJ	10 UJ	NA	NA
Boron, ICP-MS/ICP-MS/Color/ICP	ug/l	4659	4633	4870	4780	400	500	4700 J	5000
Cadmium, ICP-MS/ICP-MS/FAA/ICP	ug/l	0.00356	0.00435	0.02 U	0.02 U	40	40	100 U	100 U
Chromium, ICP-MS/ICP-MS/GFAA/ICP	ug/l	0.2828	0.2398	10 U	10 U	1 UJ	1 UJ	300 U	300 U
Chromium, FAA/GFAA	ug/l	NA	NA	NA	NA	1 UJ	1 UJ	NA	NA
Chromium VI, ICP-MS/ICP-MS/GFAA/I	ug/l	0.00782 U	0.00782 U	NA	0.05 R	0.001 U	0.001 U	0.035 U	NA
Copper, ICP-MS/ICP-MS/GFAA/ICP	ug/l	0.1699	0.1713	0.4	0.2	10	60	58 U	58 U
Copper, GFAA	ug/l	NA	NA	NA	NA	NA	NA	2 UJ	2 UJ
Iron, ICP-MS/ICP-MS/FAA/ICP	ug/l	30.16	23.5 U	20 U	20 U	160	680	4000 U	450 J
Lead, ICP-MS/ICP-MS/GFAA/ICP	ug/l	0.01666	0.01763	0.05	0.03 J	10 UJ	10 UJ	170 U	170 U
Lead, FAA/GFAA	ug/l	NA	NA	NA	NA	10 UJ	10 UJ	NA	NA
Manganese, ICP-MS/ICP-MS/GFAA/ICI	ug/l	0.5486	0.5841	5 U	5 U	1 UJ	1 UJ	100 U	100 U
Manganese, FAA	ug/l	NA	NA	NA	NA	1 UJ	1 UJ	NA	NA
Mercury, ICP-MS/ICP-MS/GFAA/ICP	ug/l	0.00053	0.00055	5 U	5 U	0.1 U	0.1	0.2 U	0.2 U
Selenium, ICP-MS/ICP-MS/GFAA/ICP	ug/l	0.694 U	0.694 U	1 U	1 U	1 U	1 U	53 B	200 U
Silver, ICP-MS/ICP-MS/GFAA/ICP	ug/l	0.494	0.254 U	0.1 U	0.1	1	2	40 U	40 U
Silver, FAA/GFAA	ug/l	NA	NA	NA	NA	1	2	10 UJ	10 UJ
Zinc, ICP-MS/ICP-MS/FAA/ICP	ug/l	0.7035 J	0.3922 J	10 U	10 U	1 U	6	24 B	1000 U
Ammonia as Nitrogen	mg/l	NA	0.012	NA	0.05 U	NA	0.133	NA	0.028 B
Color	PCU	NA	5 U	NA	5 U	NA	5	NA	5 U
Cyanide	mg/l	NA	0.005 U	NA	0.001 U	NA	0.005 U	NA	0.01 U
Fluoride	mg/l	NA	0.64	NA	0.8	NA	0.547	NA	5 U
Nitrate + Nitrite-N	mg/l	NA	0.01 U	NA	0.2 U	NA	0.01 U	NA	5 U
Oil & Grease	mg/l	NA	2.4	NA	5 U	NA	5 U	NA	0.94 J
Phenolics Recoverable	mg/l	NA	0.04 U	NA	0.01	NA	0.001 U	NA	0.046 J
Sulfide (376.2)	mg/l	NA	0.05 U	NA	0.004	NA	0.003	NA	0.05 UJ
Total Kjeldahl Nitrogen-N	mg/l	NA	NA	NA	NA	NA	NA	NA	0.17 J
Turbidity	NTU	NA	NA	NA	0.2	NA	0.2	NA	0.16
pH	su	NA	NA	NA	NA	NA	NA	NA	8.2

NA - Not Analyzed

TABLE 3-1
SUMMARY OF ANALYTICAL DATA
VIEQUES WATER QUALITY STUDY
NAVY CLEAN CTO-0395

Sample Designation RW-04		Battelle		Columbia		Caribtec		Savannah	
Analyte	Units	Dissolved	Total	Dissolved	Total	Dissolved	Total	Dissolved	Total
Arsenic, ICP-MS/ICP-MS/GFAA/ICP	ug/l	1.296	1.283	2.6	2.2	1 U	1 U	100 U	100 U
Arsenic, GFAA	ug/l	NA	NA	NA	NA	NA	NA	100 UR	100 UR
Barium, ICP-MS/ICP-MS/GFAA/ICP	ug/l	7.335	7.773	16	16	10 UJ	10 UJ	800 U	800 U
Barium, FAA/GFAA	ug/l	NA	NA	NA	NA	10 UJ	10 UJ	NA	NA
Boron, ICP-MS/ICP-MS/Color/ICP	ug/l	4096	3966	4650	4720	200	300	4600 B	4800 B
Cadmium, ICP-MS/ICP-MS/FAA/ICP	ug/l	0.03044	0.00524	0.02 U	0.02 U	50	50	100 U	100 U
Chromium, ICP-MS/ICP-MS/GFAA/ICP	ug/l	0.2595	0.2731	10 U	10 U	1 UJ	1 UJ	300 U	300 U
Chromium, FAA/GFAA	ug/l	NA	NA	NA	NA	1 UJ	1 UJ	NA	NA
Chromium VI, ICP-MS/ICP-MS/GFAA/I	ug/l	0.00782 U	0.00782 U	NA	0.05 R	0.001 U	0.001 U	0.035 U	NA
Copper, ICP-MS/ICP-MS/GFAA/ICP	ug/l	0.1601	0.1459	0.3	0.4	80	60	58 U	16 B
Copper, GFAA	ug/l	NA	NA	NA	NA	NA	NA	0.5 J	53 J
Iron, ICP-MS/ICP-MS/FAA/ICP	ug/l	23.5 U	23.5 U	20 U	20 U	160	200	4000 U	4000 U
Lead, ICP-MS/ICP-MS/GFAA/ICP	ug/l	0.00976	0.01153	0.03	0.03 J	10 UJ	10 UJ	170 U	170 U
Lead, FAA/GFAA	ug/l	NA	NA	NA	NA	10 UJ	10 UJ	NA	NA
Manganese, ICP-MS/ICP-MS/GFAA/ICI	ug/l	0.5001	0.4314	5 U	5 U	1 UJ	1 UJ	100 U	100 U
Manganese, FAA	ug/l	NA	NA	NA	NA	1 UJ	1 UJ	NA	NA
Mercury, ICP-MS/ICP-MS/GFAA/ICP	ug/l	0.00243	0.00083	5 U	5 U	0.2	0.7	0.2 U	0.2 U
Selenium, ICP-MS/ICP-MS/GFAA/ICP	ug/l	0.694 U	0.694 U	1 U	1 U	1 U	1 U	200 U	200 U
Silver, ICP-MS/ICP-MS/GFAA/ICP	ug/l	0.254 U	0.254 U	0.1 U	0.1 U	1 U	1 U	40 U	40 U
Silver, FAA/GFAA	ug/l	NA	NA	NA	NA	1 U	1 U	10 UJ	10 UJ
Zinc, ICP-MS/ICP-MS/FAA/ICP	ug/l	1.105 J	0.5251 J	10 U	10 U	1 U	1 U	14 B	47 B
Ammonia as Nitrogen	mg/l	NA	0.011	NA	0.05 U	NA	0.1 U	NA	0.054
Color	PCU	NA	5 U	NA	5 U	NA	5	NA	5 U
Cyanide	mg/l	NA	0.005 U	NA	0.001 U	NA	0.005 U	NA	0.01 U
Fluoride	mg/l	NA	0.73	NA	0.9	NA	0.605	NA	5 U
Nitrate + Nitrite-N	mg/l	NA	0.01 U	NA	0.2 U	NA	0.01 U	NA	0.05 U
Oil & Grease	mg/l	NA	1 UJ	NA	5 U	NA	5 U	NA	1.2 J
Oxygen	mg/l	NA	NA	NA	NA	NA	6.1	NA	NA
Phenolics Recoverable	mg/l	NA	0.04 U	NA	0.02	NA	0.001 U	NA	0.03 U
Battelle Sulfide (376.2 modified)	mg/l	NA	0.00315 J	NA	NA	NA	NA	NA	NA
Sulfide (376.2)	mg/l	NA	NA	NA	0.002 U	NA	0.006	NA	0.05 U
Temperature	C	NA	NA	NA	NA	NA	28.1	NA	NA
Total Kjeldahl Nitrogen-N	mg/l	NA	NA	NA	NA	NA	NA	NA	0.4 U
Turbidity	NTU	NA	NA	NA	0.1	NA	0.2	NA	0.18
pH	su	NA	NA	NA	NA	NA	8.1	NA	8.3

NA - Not Analyzed

TABLE 3-1
SUMMARY OF ANALYTICAL DATA
VIEQUES WATER QUALITY STUDY
NAVY CLEAN CTO-0395

Sample Designation RW-05		Battelle		Columbia		Caribtec		Savannah	
Analyte	Units	Dissolved	Total	Dissolved	Total	Dissolved	Total	Dissolved	Total
Arsenic, ICP-MS/ICP-MS/GFAA/ICP	ug/l	1.274	1.485	2.1	2	1 U	1 U	100 U	100 U
Arsenic, GFAA	ug/l	NA	NA	NA	NA	NA	NA	100 UR	100 UR
Barium, ICP-MS/ICP-MS/GFAA/ICP	ug/l	7.36	7.603	15	16	10 UJ	10 UJ	800 U	800 U
Barium, FAA/GFAA	ug/l	NA	NA	NA	NA	10 UJ	10 UJ	NA	NA
Boron, ICP-MS/ICP-MS/Color/ICP	ug/l	4077	3972	4650	4750	200	200	4800 B	4700 B
Cadmium, ICP-MS/ICP-MS/FAA/ICP	ug/l	0.00461	0.00548	0.02 U	0.02 U	50	50	100 U	100 U
Chromium, ICP-MS/ICP-MS/GFAA/ICP	ug/l	0.2606	0.317	10 U	10 U	1 UJ	1 UJ	300 U	300 U
Chromium, FAA/GFAA	ug/l	NA	NA	NA	NA	1 UJ	1 UJ	NA	NA
Chromium VI, ICP-MS/ICP-MS/GFAA/I	ug/l	0.00782 U	0.00782 U	NA	0.05 R	0.001 U	0.001 U	0.035 U	NA
Copper, ICP-MS/ICP-MS/GFAA/ICP	ug/l	0.1548	0.1481	0.2	0.3	20	120	58 U	58 U
Copper, GFAA	ug/l	NA	NA	NA	NA	NA	NA	2 UJ	2 UJ
Iron, ICP-MS/ICP-MS/FAA/ICP	ug/l	23.5 U	23.5 U	20 U	20 U	40	150	4000 U	4000 U
Lead, ICP-MS/ICP-MS/GFAA/ICP	ug/l	0.00823	0.00991	0.03	0.05 J	10 UJ	10 UJ	170 U	170 U
Lead, FAA/GFAA	ug/l	NA	NA	NA	NA	10 UJ	10 UJ	NA	NA
Manganese, ICP-MS/ICP-MS/GFAA/ICI	ug/l	0.4366	0.4605	5 U	5 U	1 UJ	1 UJ	100 U	100 U
Manganese, FAA	ug/l	NA	NA	NA	NA	1 UJ	1 UJ	NA	NA
Mercury, ICP-MS/ICP-MS/GFAA/ICP	ug/l	0.00055	0.00071	5 U	5 U	0.2	0.7	0.2 U	0.2 U
Selenium, ICP-MS/ICP-MS/GFAA/ICP	ug/l	0.694 U	0.694 U	1 U	1 U	1 U	1 U	200 U	200 U
Silver, ICP-MS/ICP-MS/GFAA/ICP	ug/l	0.254 U	0.254 U	0.1 U	0.1 U	1 U	1 U	40 U	40 U
Silver, FAA/GFAA	ug/l	NA	NA	NA	NA	1 U	1 U	10 UJ	10 UJ
Zinc, ICP-MS/ICP-MS/FAA/ICP	ug/l	1.682 J	0.5344 J	10 U	10 U	1 U	1 U	14 B	1000 U
Ammonia as Nitrogen	mg/l	NA	0.013	NA	0.05 U	NA	0.1 U	NA	0.017 B
Color	PCU	NA	5 U	NA	5 U	NA	5	NA	5 U
Cyanide	mg/l	NA	0.005 U	NA	0.001 U	NA	0.005 U	NA	0.01 U
Fluoride	mg/l	NA	0.6	NA	0.7	NA	0.484	NA	5 U
Nitrate + Nitrite-N	mg/l	NA	0.01 U	NA	0.2 U	NA	0.01 U	NA	0.05 U
Oil & Grease	mg/l	NA	1 UJ	NA	5 U	NA	5 U	NA	1.8 J
Oxygen	mg/l	NA	NA	NA	NA	NA	6	NA	NA
Phenolics Recoverable	mg/l	NA	0.04 U	NA	0.04	NA	0.001 U	NA	0.03 U
Battelle Sulfide (376.2 modified)	mg/l	NA	0.00133 J	NA	NA	NA	NA	NA	NA
Sulfide (376.2)	mg/l	NA	NA	NA	0.003	NA	0.003 U	NA	0.05 U
Temperature	C	NA	NA	NA	NA	NA	29.3	NA	NA
Total Kjeldahl Nitrogen-N	mg/l	NA	NA	NA	NA	NA	NA	NA	0.23
Turbidity	NTU	NA	NA	NA	0.1	NA	0.3	NA	0.13
pH	su	NA	NA	NA	NA	NA	8.1	NA	8.3

NA - Not Analyzed

TABLE 3-1
SUMMARY OF ANALYTICAL DATA
VIEQUES WATER QUALITY STUDY
NAVY CLEAN CTO-0395

Sample Designation RW-09		Battelle		Columbia		Caribtec		Savannah	
Analyte	Units	Dissolved	Total	Dissolved	Total	Dissolved	Total	Dissolved	Total
Arsenic, ICP-MS/ICP-MS/GFAA/ICP	ug/l	1.053	1.286	2.8	2.4	1 U	1 U	100 U	100 U
Arsenic, GFAA	ug/l	NA	NA	NA	NA	NA	NA	100 UR	100 UR
Barium, ICP-MS/ICP-MS/GFAA/ICP	ug/l	7.531	7.56	14	16	10 UJ	40 J	800 U	800 U
Boron, ICP-MS/ICP-MS/Color/ICP	ug/l	4086	4000	4640	4800	200	200	4500 B	4600 B
Cadmium, ICP-MS/ICP-MS/FAA/ICP	ug/l	0.01241	0.00882	0.02 U	0.03	40	40	100 U	100 U
Chromium, ICP-MS/ICP-MS/GFAA/ICP	ug/l	0.2918	0.2702	10 U	10 U	1 UJ	1 UJ	300 U	300 U
Chromium VI, ICP-MS/ICP-MS/GFAA/ICP	ug/l	0.00782 U	0.00782 U	NA	0.05 R	0.001 U	0.001 U	0.035 U	NA
Copper, ICP-MS/ICP-MS/GFAA/ICP	ug/l	0.1475	0.1384	0.2	0.2	10	10	58 U	58 U
Copper, GFAA	ug/l	NA	NA	NA	NA	NA	NA	2 UJ	2 UJ
Iron, ICP-MS/ICP-MS/FAA/ICP	ug/l	23.5 U	23.5 U	20 U	20 U	40	10	4000 U	490 J
Lead, ICP-MS/ICP-MS/GFAA/ICP	ug/l	0.01642	0.2519	0.03	0.04 J	10 UJ	10 UJ	170 U	170 U
Manganese, ICP-MS/ICP-MS/GFAA/ICP	ug/l	0.5456	0.4473	5 U	8	1 UJ	1 UJ	100 U	100 U
Mercury, ICP-MS/ICP-MS/GFAA/ICP	ug/l	0.00092	0.00046	5 U	5 U	0.2	0.7	0.2 U	0.2 U
Selenium, ICP-MS/ICP-MS/GFAA/ICP	ug/l	0.694 U	0.694 U	1 U	1 U	1 U	1 U	200 U	200 U
Silver, ICP-MS/ICP-MS/GFAA/ICP	ug/l	0.254 U	0.7025	0.1 U	0.1 U	1 U	1 U	40 U	40 U
Silver, FAA/GFAA	ug/l	NA	NA	NA	NA	1 U	1 U	10 UJ	10 UJ
Zinc, ICP-MS/ICP-MS/FAA/ICP	ug/l	0.7929 J	0.342 UJ	10 U	10 U	1 U	1 U	1000 U	1000 U
Ammonia as Nitrogen	mg/l	NA	NA	NA	0.05 U	NA	0.1 U	NA	0.052
Color	PCU	NA	5 U	NA	5 U	NA	5	NA	5 U
Cyanide	mg/l	NA	0.005 U	NA	0.001 U	NA	0.005 U	NA	0.01 U
Fluoride	mg/l	NA	0.6	NA	0.7	NA	0.544	NA	5 U
Nitrate + Nitrite-N	mg/l	NA	0.01 U	NA	0.2 U	NA	0.01 U	NA	0.05 U
Oil & Grease	mg/l	NA	1.2 J	NA	5 U	NA	5 U	NA	1.9 J
Oxygen	mg/l	NA	NA	NA	NA	NA	5.85	NA	NA
Phenolics Recoverable	mg/l	NA	NA	NA	0.02	NA	0.001 U	NA	0.03 U
Battelle Sulfide (376.2 modified)	mg/l	NA	0.003 J	NA	NA	NA	NA	NA	NA
Sulfide (376.2)	mg/l	NA	NA	NA	0.002 U	NA	0.003	NA	0.05 U
Temperature	C	NA	NA	NA	NA	NA	29.3	NA	NA
Total Kjeldahl Nitrogen-N	mg/l	NA	NA	NA	NA	NA	NA	NA	0.26
Turbidity	NTU	NA	NA	NA	0.1	NA	0.2	NA	0.18
pH	su	NA	NA	NA	NA	NA	8.2	NA	8.3

NA - Not Analyzed

TABLE 3-1
SUMMARY OF ANALYTICAL DATA
VIEQUES WATER QUALITY STUDY
NAVY CLEAN CTO-0395

Sample Designation RW-10		Battelle		Columbia		Caribtec		Savannah	
Analyte	Units	Dissolved	Total	Dissolved	Total	Dissolved	Total	Dissolved	Total
Arsenic, ICP-MS/ICP-MS/GFAA/ICP	ug/l	1.179	1.238	2.8	2.3	1 U	1 U	100 U	100 U
Arsenic, GFAA	ug/l	NA	NA	NA	NA	NA	NA	100 UR	100 UR
Barium, ICP-MS/ICP-MS/GFAA/ICP	ug/l	7.591	7.711	14	18	10 UJ	10 UJ	800 U	800 U
Barium, FAA/GFAA	ug/l	NA	NA	NA	NA	10 UJ	178 J	NA	NA
Boron, ICP-MS/ICP-MS/Color/ICP	ug/l	4063	4002	4570	5090	300	100	4600 B	4700 B
Boron, FAA/GFAA	ug/l	NA	NA	NA	NA	300	100	NA	NA
Cadmium, ICP-MS/ICP-MS/FAA/ICP	ug/l	0.0044	0.0046	0.02 U	0.03	30	40	100 U	100 U
Chromium, ICP-MS/ICP-MS/GFAA/ICP	ug/l	0.2517	0.2756	10 U	10 U	1 UJ	1 UJ	300 U	300 U
Chromium, FAA/GFAA	ug/l	NA	NA	NA	NA	1 UJ	1 UJ	NA	NA
Chromium VI, ICP-MS/ICP-MS/GFAA/ICP	ug/l	0.00782 U	0.00782 U	NA	0.05 R	0.001 U	0.001 U	0.035 U	NA
Copper, ICP-MS/ICP-MS/GFAA/ICP	ug/l	0.1431	0.1603	0.4	0.2 U	10	10	58 U	58 U
Copper, GFAA	ug/l	NA	NA	NA	NA	NA	NA	2 UJ	2 UJ
Iron, ICP-MS/ICP-MS/FAA/ICP	ug/l	23.5 U	23.5 U	20 U	20 U	20	30	4000 U	4000 U
Lead, ICP-MS/ICP-MS/GFAA/ICP	ug/l	0.00765	0.00974	0.08	0.04 J	10 UJ	10 UJ	170 U	170 U
Lead, FAA/GFAA	ug/l	NA	NA	NA	NA	10 UJ	10 UJ	NA	NA
Manganese, ICP-MS/ICP-MS/GFAA/ICP	ug/l	0.4553	0.5203	5 U	5 U	1 UJ	1 UJ	100 U	100 U
Manganese, FAA	ug/l	NA	NA	NA	NA	1 UJ	1 UJ	NA	NA
Mercury, ICP-MS/ICP-MS/GFAA/ICP	ug/l	0.00052	0.00071	5 U	5 U	0.1 U	0.7	0.2 U	0.2 U
Selenium, ICP-MS/ICP-MS/GFAA/ICP	ug/l	0.694 U	0.694 U	1 U	1 U	1 U	1 U	200 U	200 U
Selenium, FAA/GFAA	ug/l	NA	NA	NA	NA	1 U	1 U	NA	NA
Silver, ICP-MS/ICP-MS/GFAA/ICP	ug/l	0.254 U	0.254 U	0.1	0.1 U	1 U	1 U	40 U	40 U
Silver, FAA/GFAA	ug/l	NA	NA	NA	NA	1 U	1 U	10 UJ	10 UJ
Zinc, ICP-MS/ICP-MS/FAA/ICP	ug/l	0.9261 J	0.9363 J	10 U	10 U	1 U	1 U	29 B	1000 U
Ammonia as Nitrogen	mg/l	NA	NA	NA	0.05 U	NA	0.1 U	NA	0.031
Color	PCU	NA	5 U	NA	5 U	NA	5	NA	5 U
Cyanide	mg/l	NA	0.005 U	NA	0.001 U	NA	0.005 U	NA	0.01 U
Fluoride	mg/l	NA	0.63	NA	0.8	NA	0.653	NA	5 U
Nitrate + Nitrite-N	mg/l	NA	0.01 U	NA	0.2 U	NA	0.01 U	NA	0.05 U
Oil & Grease	mg/l	NA	1 UJ	NA	5 U	NA	5 U	NA	3.2 J
Oxygen	mg/l	NA	NA	NA	NA	NA	6.32	NA	NA
Phenolics Recoverable	mg/l	NA	0.04 U	NA	0.01 U	NA	0.001 U	NA	0.03 U
Battelle Sulfide (376.2 modified)	mg/l	NA	0.00505 J	NA	NA	NA	NA	NA	NA
Sulfide (376.2)	mg/l	NA	NA	NA	0.002	NA	0.003 U	NA	0.05 U
Temperature	C	NA	NA	NA	NA	NA	29.3	NA	NA
Total Kjeldahl Nitrogen-N	mg/l	NA	NA	NA	NA	NA	NA	NA	0.2 U
Turbidity	NTU	NA	NA	NA	0.1 U	NA	0.3	NA	0.16
pH	su	NA	NA	NA	NA	NA	8.2	NA	8.3

NA - Not Analyzed

TABLE 3-1
SUMMARY OF ANALYTICAL DATA
VIEQUES WATER QUALITY STUDY
NAVY CLEAN CTO-0395

Sample Designation SP-01		Battelle		Columbia		Caribtec		Savannah	
Analyte	Units	Dissolved	Total	Dissolved	Total	Dissolved	Total	Dissolved	Total
Arsenic, ICP-MS/ICP-MS/GFAA/ICP	ug/l	1.332	1.229	3.8	2.2	1 U	1 U	100 U	100 U
Arsenic, GFAA	ug/l	NA	NA	NA	NA	NA	NA	100 UR	100 UR
Barium, ICP-MS/ICP-MS/GFAA/ICP	ug/l	7.042	7.62	15	15	10 UJ	10 UJ	800 U	800 U
Barium, FAA/GFAA	ug/l	NA	NA	NA	NA	10 UJ	10 UJ	NA	NA
Boron, ICP-MS/ICP-MS/Color/ICP	ug/l	4766	4695	4820	4830	500	1000	4600 J	5000
Cadmium, ICP-MS/ICP-MS/FAA/ICP	ug/l	0.00752	0.00299 U	0.02 U	0.02	60	50	100 U	100 U
Chromium, ICP-MS/ICP-MS/GFAA/ICP	ug/l	0.299	0.266	10 U	10 U	1 UJ	1 UJ	300 U	300 U
Chromium, FAA/GFAA	ug/l	NA	NA	NA	NA	1 UJ	1 UJ	NA	NA
Chromium VI, ICP-MS/ICP-MS/GFAA/I	ug/l	0.00782 U	0.00782 U	NA	0.05 R	0.001 U	0.001 U	0.007 U	NA
Copper, ICP-MS/ICP-MS/GFAA/ICP	ug/l	0.1695	0.1703	0.3	0.2	50	250	58 U	58 U
Copper, GFAA	ug/l	NA	NA	NA	NA	NA	NA	2 U	2 UJ
Iron, ICP-MS/ICP-MS/FAA/ICP	ug/l	26.29	23.5 U	20 U	20 U	150	150	420 J	4000 U
Lead, ICP-MS/ICP-MS/GFAA/ICP	ug/l	0.00976	0.01015	0.14	0.08 J	10 UJ	10 UJ	170 U	170 U
Lead, FAA/GFAA	ug/l	NA	NA	NA	NA	10 UJ	10 UJ	NA	NA
Manganese, ICP-MS/ICP-MS/GFAA/ICI	ug/l	0.662	0.6692	5 U	5 U	1 UJ	3 J	100 U	100 U
Manganese, FAA	ug/l	NA	NA	NA	NA	1 UJ	3 J	NA	NA
Mercury, ICP-MS/ICP-MS/GFAA/ICP	ug/l	0.00071	0.00065	5 U	5 U	0.3	0.7	0.2 U	0.2 U
Selenium, ICP-MS/ICP-MS/GFAA/ICP	ug/l	0.694 U	0.694 U	1 U	1 U	1 U	1 U	56 B	200 U
Selenium, FAA/GFAA	ug/l	NA	NA	NA	NA	1 U	1 U	NA	NA
Silver, ICP-MS/ICP-MS/GFAA/ICP	ug/l	0.254 U	0.254 U	0.1 U	0.1 U	1 U	1	40 U	40 U
Silver, FAA/GFAA	ug/l	NA	NA	NA	NA	1 U	1	10 UJ	10 UJ
Zinc, ICP-MS/ICP-MS/FAA/ICP	ug/l	1.036 J	0.9771 J	10 U	10 U	1 U	1 U	49 B	1000 U
Ammonia as Nitrogen	mg/l	NA	0.014	NA	0.05 U	NA	0.1 U	NA	0.03 U
Color	PCU	NA	5 U	NA	5 U	NA	5	NA	5 U
Cyanide	mg/l	NA	0.005 U	NA	0.001 U	NA	0.005 U	NA	0.01 U
Fluoride	mg/l	NA	0.64	NA	0.8	NA	0.523	NA	5 U
Nitrate + Nitrite-N	mg/l	NA	0.01 U	NA	0.2 U	NA	0.01 U	NA	0.021 J
Oil & Grease	mg/l	NA	1 U	NA	5 U	NA	5 U	NA	2.5 U
Oxygen	mg/l	NA	NA	NA	NA	NA	6.9	NA	NA
Phenolics Recoverable	mg/l	NA	0.04 U	NA	0.02	NA	0.001 U	NA	0.041 J
Sulfide (376.2)	mg/l	NA	0.05 U	NA	0.003	NA	0.003 U	NA	0.05 UJ
Temperature	C	NA	NA	NA	NA	NA	28.7	NA	NA
Total Kjeldahl Nitrogen-N	mg/l	NA	NA	NA	NA	NA	NA	NA	0.34 J
Turbidity	NTU	NA	NA	NA	0.1	NA	0.2	NA	0.15
pH	su	NA	NA	NA	NA	NA	8.3	NA	7.7

NA - Not Analyzed

TABLE 3-1
SUMMARY OF ANALYTICAL DATA
VIEQUES WATER QUALITY STUDY
NAVY CLEAN CTO-0395

Sample Designation SP-02		Battelle		Columbia		Caribtec		Savannah	
Analyte	Units	Dissolved	Total	Dissolved	Total	Dissolved	Total	Dissolved	Total
Arsenic, ICP-MS/ICP-MS/GFAA/ICP	ug/l	1.16	1.218	3.7	2	1 U	1 U	100 U	100 U
Arsenic, GFAA	ug/l	NA	NA	NA	NA	NA	NA	100 UR	100 UR
Barium, ICP-MS/ICP-MS/GFAA/ICP	ug/l	7.103	7.31	14	14	10 UJ	10 UJ	800 U	16 B
Barium, FAA/GFAA	ug/l	NA	NA	NA	NA	10 UJ	10 UJ	NA	NA
Boron, ICP-MS/ICP-MS/Color/ICP	ug/l	4570	4638	4530	4840	200	400	4800 J	6900
Cadmium, ICP-MS/ICP-MS/FAA/ICP	ug/l	0.00412	0.00461	0.02 U	0.03	60	60	100 U	100 U
Chromium, ICP-MS/ICP-MS/GFAA/ICP	ug/l	0.2697	0.2688	10 U	10 U	1 UJ	1 UJ	300 U	300 U
Chromium, FAA/GFAA	ug/l	NA	NA	NA	NA	1 UJ	1 UJ	NA	NA
Chromium VI, ICP-MS/ICP-MS/GFAA/ICP	ug/l	0.00782 U	0.00782 U	NA	0.05 R	0.001 U	0.001 U	0.007 U	NA
Copper, ICP-MS/ICP-MS/GFAA/ICP	ug/l	0.1451	0.1556	0.2	0.2	100	110	58 U	30 B
Copper, GFAA	ug/l	NA	NA	NA	NA	NA	NA	2 UJ	2 U
Iron, ICP-MS/ICP-MS/FAA/ICP	ug/l	23.5 U	23.5 U	20 U	20 U	160	280	4000 U	4000 U
Lead, ICP-MS/ICP-MS/GFAA/ICP	ug/l	0.01181	0.01519	0.06	0.07 J	10 UJ	10 UJ	170 U	170 U
Lead, FAA/GFAA	ug/l	NA	NA	NA	NA	10 UJ	10 UJ	NA	NA
Manganese, ICP-MS/ICP-MS/GFAA/ICP	ug/l	0.6555	0.5385	5 U	5 U	1 UJ	14 J	100 U	100 U
Manganese, FAA	ug/l	NA	NA	NA	NA	1 UJ	14 J	NA	NA
Mercury, ICP-MS/ICP-MS/GFAA/ICP	ug/l	0.00153	0.00076	5 U	5 U	0.1	0.3	0.2 U	0.2 U
Selenium, ICP-MS/ICP-MS/GFAA/ICP	ug/l	0.694 U	0.694 U	1 U	1 U	1 U	1 U	200 U	200 U
Silver, ICP-MS/ICP-MS/GFAA/ICP	ug/l	0.456	0.254 U	0.1 U	0.1 U	1	1	40 U	40 U
Silver, FAA/GFAA	ug/l	NA	NA	NA	NA	1	1	10 UJ	10 UJ
Zinc, ICP-MS/ICP-MS/FAA/ICP	ug/l	0.7913 J	0.342 UJ	10 U	10 U	1 U	1 U	53 B	23 B
Ammonia as Nitrogen	mg/l	NA	0.012	NA	0.05 U	NA	0.1 U	NA	0.03 U
Color	PCU	NA	5 U	NA	5 U	NA	5	NA	5
Cyanide	mg/l	NA	0.005 U	NA	0.001 U	NA	0.005 U	NA	0.01 U
Fluoride	mg/l	NA	0.67	NA	0.8	NA	0.623	NA	5 U
Nitrate + Nitrite-N	mg/l	NA	0.01 U	NA	0.2 U	NA	0.01 U	NA	5 U
Oil & Grease	mg/l	NA	1 U	NA	5 U	NA	5 U	NA	1.3 J
Oxygen	mg/l	NA	NA	NA	NA	NA	6.8	NA	NA
Phenolics Recoverable	mg/l	NA	0.04 U	NA	0.01 U	NA	0.001 U	NA	0.01 UR
Sulfide (376.2)	mg/l	NA	0.05 U	NA	0.002	NA	0.003	NA	0.05 UJ
Temperature	C	NA	NA	NA	NA	NA	27.4	NA	NA
Total Kjeldahl Nitrogen-N	mg/l	NA	NA	NA	NA	NA	NA	NA	0.24 J
Turbidity	NTU	NA	NA	NA	0.3	NA	0.3	NA	0.13
pH	su	NA	NA	NA	NA	NA	8.2	NA	8

NA - Not Analyzed

TABLE 3-1
SUMMARY OF ANALYTICAL DATA
VIEQUES WATER QUALITY STUDY
NAVY CLEAN CTO-0395

Sample Designation SP-03		Battelle		Columbia		Caribtec		Savannah	
Analyte	Units	Dissolved	Total	Dissolved	Total	Dissolved	Total	Dissolved	Total
Arsenic, ICP-MS/ICP-MS/GFAA/ICP	ug/l	1.203	1.116	2.1	2	1 U	1 U	100 U	100 U
Arsenic, GFAA	ug/l	NA	NA	NA	NA	NA	NA	100 UR	100 UR
Barium, ICP-MS/ICP-MS/GFAA/ICP	ug/l	7.304	7.529	16	14	10 UJ	10 UJ	800 U	800 U
Barium, FAA/GFAA	ug/l	NA	NA	NA	NA	10 UJ	10 UJ	NA	NA
Boron, ICP-MS/ICP-MS/Color/ICP	ug/l	4719	4666	4930	4740	300	300	4600 BJ	5000
Boron, FAA/GFAA	ug/l	NA	NA	NA	NA	300	300	NA	NA
Cadmium, ICP-MS/ICP-MS/FAA/ICP	ug/l	0.00572	0.00427	0.02 U	0.02	40	50	100 U	100 U
Chromium, ICP-MS/ICP-MS/GFAA/ICP	ug/l	0.2612	0.2275	10 U	10 U	1 UJ	1 UJ	300 U	300 U
Chromium, FAA/GFAA	ug/l	NA	NA	NA	NA	1 UJ	1 UJ	NA	NA
Chromium VI, ICP-MS/ICP-MS/GFAA/ICP	ug/l	0.00782 U	0.00782 U	NA	0.05 R	0.001 U	0.001 U	0.035 U	NA
Copper, ICP-MS/ICP-MS/GFAA/ICP	ug/l	0.2051	0.1208	0.2 U	0.3	20	60	58 U	58 U
Copper, GFAA	ug/l	NA	NA	NA	NA	NA	NA	2 U	2 U
Iron, ICP-MS/ICP-MS/FAA/ICP	ug/l	23.5 U	23.5 U	20 U	20 U	120	200	4000 U	4000 U
Lead, ICP-MS/ICP-MS/GFAA/ICP	ug/l	0.1213	0.02201	0.09	0.06 J	1 UJ	1 UJ	170 U	170 U
Lead, FAA/GFAA	ug/l	NA	NA	NA	NA	1 UJ	10 UJ	NA	NA
Manganese, ICP-MS/ICP-MS/GFAA/ICP	ug/l	0.5924	0.654	5 U	5 U	1 UJ	1 UJ	100 U	100 U
Manganese, FAA	ug/l	NA	NA	NA	NA	1 UJ	1 UJ	NA	NA
Mercury, ICP-MS/ICP-MS/GFAA/ICP	ug/l	0.00058	0.00143	5 U	5 U	1 U	0.3	0.2 U	0.2 U
Selenium, ICP-MS/ICP-MS/GFAA/ICP	ug/l	0.694 U	0.694 U	1 U	1 U	1 U	1 U	200 U	200 U
Selenium, FAA/GFAA	ug/l	NA	NA	NA	NA	1 U	1 U	NA	NA
Silver, ICP-MS/ICP-MS/GFAA/ICP	ug/l	0.254 U	0.3942	0.1 U	0.2	2	5	40 U	40 U
Silver, FAA/GFAA	ug/l	NA	NA	NA	NA	2	5	10 UJ	10 UJ
Zinc, ICP-MS/ICP-MS/FAA/ICP	ug/l	1.441 J	0.342 UJ	10 U	10 U	1	1 U	25 B	1000 U
Ammonia as Nitrogen	mg/l	NA	0.012	NA	0.05 U	NA	0.106	NA	0.021 B
Color	PCU	NA	5 U	NA	5 U	NA	5	NA	5 U
Cyanide	mg/l	NA	0.005 U	NA	0.001 U	NA	0.005 U	NA	0.01 U
Fluoride	mg/l	NA	0.62	NA	0.8	NA	0.441	NA	5 U
Nitrate + Nitrite-N	mg/l	NA	0.01 U	NA	0.2 U	NA	0.01 U	NA	5 U
Oil & Grease	mg/l	NA	1 U	NA	5 U	NA	5 U	NA	0.59 J
Oxygen	mg/l	NA	NA	NA	NA	NA	6.97	NA	NA
Phenolics Recoverable	mg/l	NA	0.04 U	NA	0.01	NA	0.001 U	NA	0.03 UR
Sulfide (376.2)	mg/l	NA	0.05 U	NA	0.003	NA	0.003 U	NA	0.05 UJ
Temperature	C	NA	NA	NA	NA	NA	28.1	NA	NA
Total Kjeldahl Nitrogen-N	mg/l	NA	NA	NA	NA	NA	NA	NA	0.2 J
Turbidity	NTU	NA	NA	NA	0.1	NA	0.2	NA	0.2
pH	su	NA	NA	NA	NA	NA	8.2	NA	8.1

NA - Not Analyzed

TABLE 3-1
SUMMARY OF ANALYTICAL DATA
VIEQUES WATER QUALITY STUDY
NAVY CLEAN CTO-0395

Sample Designation SP-08		Battelle		Columbia		Caribtec		Savannah	
Analyte	Units	Dissolved	Total	Dissolved	Total	Dissolved	Total	Dissolved	Total
Arsenic, ICP-MS/ICP-MS/GFAA/ICP	ug/l	1.352	1.258	1.8	1.7	1 U	1 U	100 U	100 U
Arsenic, GFAA	ug/l	NA	NA	NA	NA	NA	NA	100 UR	100 UR
Barium, ICP-MS/ICP-MS/GFAA/ICP	ug/l	7.585	7.822	16	14	10 UJ	10 UJ	800 U	12 B
Barium, FAA/GFAA	ug/l	NA	NA	NA	NA	10 UJ	10 UJ	NA	NA
Boron, ICP-MS/ICP-MS/Color/ICP	ug/l	4068	3975	4750	4510	200	300	4500 B	4900
Cadmium, ICP-MS/ICP-MS/FAA/ICP	ug/l	0.00612	0.00468	0.02 U	0.02 U	30	40	100 U	100 U
Chromium, ICP-MS/ICP-MS/GFAA/ICP	ug/l	0.246	0.2399	10 U	10 U	1 UJ	1 UJ	300 U	300 U
Chromium, FAA/GFAA	ug/l	NA	NA	NA	NA	1 UJ	1 UJ	NA	NA
Chromium VI, ICP-MS/ICP-MS/GFAA/ICP	ug/l	0.00782 U	0.00782 U	NA	0.05 R	0.001 U	0.001 U	0.035 U	NA
Copper, ICP-MS/ICP-MS/GFAA/ICP	ug/l	0.2226	0.1518	0.3	0.4	130	20	58 U	58 U
Copper, GFAA	ug/l	NA	NA	NA	NA	NA	NA	2 UJ	2 UJ
Iron, ICP-MS/ICP-MS/FAA/ICP	ug/l	23.5 U	23.5 U	20 U	20 U	80	63	390 J	670 J
Lead, ICP-MS/ICP-MS/GFAA/ICP	ug/l	0.0096	0.02293	0.05	0.03	10 UJ	10 UJ	170 U	170 U
Lead, FAA/GFAA	ug/l	NA	NA	NA	NA	10 UJ	10 UJ	NA	NA
Manganese, ICP-MS/ICP-MS/GFAA/ICP	ug/l	0.5335	0.4882	5 U	5 U	1 UJ	1 UJ	100 U	100 U
Manganese, FAA	ug/l	NA	NA	NA	NA	1 UJ	1 UJ	NA	NA
Mercury, ICP-MS/ICP-MS/GFAA/ICP	ug/l	0.00046	0.00074	5 U	5 U	0.1 U	0.3	0.2 U	0.2 U
Selenium, ICP-MS/ICP-MS/GFAA/ICP	ug/l	0.694 U	0.694 U	1 U	1 U	1 U	1 U	200 U	120 B
Selenium, FAA/GFAA	ug/l	NA	NA	NA	NA	1 U	1 U	NA	NA
Silver, ICP-MS/ICP-MS/GFAA/ICP	ug/l	0.254 U	0.2763	0.1 U	0.1 U	1 U	1 U	15 B	40 U
Silver, FAA/GFAA	ug/l	NA	NA	NA	NA	1 U	1 U	10 UJ	10 UJ
Zinc, ICP-MS/ICP-MS/FAA/ICP	ug/l	0.5233 J	1.155 J	10 U	10 U	52	38	19 B	1000 U
Ammonia as Nitrogen	mg/l	NA	0.01	NA	0.05 U	NA	0.1 U	NA	0.03 U
Color	PCU	NA	5 U	NA	5 U	NA	5	NA	5 U
Cyanide	mg/l	NA	0.005 U	NA	0.001 U	NA	0.005 U	NA	0.01 U
Fluoride	mg/l	NA	0.58	NA	0.7	NA	0.459	NA	5 U
Nitrate + Nitrite-N	mg/l	NA	0.01 U	NA	0.2 U	NA	0.01 U	NA	0.05 U
Oil & Grease	mg/l	NA	1.1 UJ	NA	5 U	NA	5 U	NA	2.4 J
Oxygen	mg/l	NA	NA	NA	NA	NA	7.91	NA	NA
Phenolics Recoverable	mg/l	NA	0.04 U	NA	0.01 U	NA	0.001 U	NA	0.03 UR
Battelle Sulfide (376.2 modified)	mg/l	NA	0.00178 J	NA	NA	NA	NA	NA	NA
Sulfide (376.2)	mg/l	NA	NA	NA	0.002 U	NA	0.003 U	NA	0.05 U
Temperature	C	NA	NA	NA	NA	NA	29.5	NA	NA
Total Kjeldahl Nitrogen-N	mg/l	NA	NA	NA	NA	NA	NA	NA	0.4 U
Turbidity	NTU	NA	NA	NA	0.1	NA	0.2	NA	0.14
pH	su	NA	NA	NA	NA	NA	8	NA	8.3

NA - Not Analyzed

TABLE 3-1
SUMMARY OF ANALYTICAL DATA
VIEQUES WATER QUALITY STUDY
NAVY CLEAN CTO-0395

Sample Designation SP-09		Battelle		Columbia		Caribtec		Savannah	
Analyte	Units	Dissolved	Total	Dissolved	Total	Dissolved	Total	Dissolved	Total
Arsenic, ICP-MS/ICP-MS/GFAA/ICP	ug/l	1.404	1.406	2.1	1.8	1 U	1 U	100 U	100 U
Arsenic, GFAA	ug/l	NA	NA	NA	NA	NA	NA	100 UR	100 UR
Barium, ICP-MS/ICP-MS/GFAA/ICP	ug/l	7.572	7.7	14	12	10 UJ	10 UJ	800 U	12 B
Boron, ICP-MS/ICP-MS/Color/ICP	ug/l	4060	4020	4720	4650	200	230	4600 B	4900
Cadmium, ICP-MS/ICP-MS/FAA/ICP	ug/l	0.01124	0.00429	0.02	0.02 U	45	45	100 U	100 U
Chromium, ICP-MS/ICP-MS/GFAA/ICP	ug/l	0.2992	0.2596	10 U	10 U	1 UJ	1 UJ	300 U	300 U
Chromium VI, ICP-MS/ICP-MS/GFAA/I	ug/l	0.00782 U	0.00782 U	NA	0.05 R	0.001 U	0.001 U	0.035 U	NA
Copper, ICP-MS/ICP-MS/GFAA/ICP	ug/l	0.1543	0.1493	0.4	0.2 U	3	43	46 B	58 U
Copper, GFAA	ug/l	NA	NA	NA	NA	NA	NA	2 UJ	0.7 J
Iron, ICP-MS/ICP-MS/FAA/ICP	ug/l	23.5 U	23.5 U	20 U	20 U	90	100	4000 U	720 J
Lead, ICP-MS/ICP-MS/GFAA/ICP	ug/l	0.01662	0.0088	0.02	0.02	10 UJ	10 UJ	170 U	170 U
Manganese, ICP-MS/ICP-MS/GFAA/ICI	ug/l	0.6344	0.6475	5 U	5 U	1 UJ	1 UJ	100 U	100 U
Mercury, ICP-MS/ICP-MS/GFAA/ICP	ug/l	0.00049	0.00062	5 U	5 U	0.1 U	0.5	0.2 U	0.2 U
Selenium, ICP-MS/ICP-MS/GFAA/ICP	ug/l	0.694 U	0.694 U	1 U	1 U	1 U	1 U	200 U	95 B
Silver, ICP-MS/ICP-MS/GFAA/ICP	ug/l	0.254 U	0.254 U	0.1 U	0.1 U	1 U	1 U	40 U	11 B
Silver, FAA/GFAA	ug/l	NA	NA	NA	NA	1 U	1 U	10 UJ	10 UJ
Zinc, ICP-MS/ICP-MS/FAA/ICP	ug/l	0.342 UJ	0.342 UJ	10 U	10 U	10 U	10 U	1000 U	18 B
Ammonia as Nitrogen	mg/l	NA	0.01 U	NA	0.05 U	NA	0.1 U	NA	0.03 U
Color	PCU	NA	5 U	NA	5 U	NA	5	NA	5 U
Cyanide	mg/l	NA	0.005 U	NA	0.001 U	NA	0.005 U	NA	0.01 U
Fluoride	mg/l	NA	0.63	NA	0.7	NA	0.703	NA	5 U
Nitrate + Nitrite-N	mg/l	NA	0.01 U	NA	0.2 U	NA	0.01 U	NA	0.05 U
Oil & Grease	mg/l	NA	1 UJ	NA	5 U	NA	5 U	NA	1.5 J
Oxygen	mg/l	NA	NA	NA	NA	NA	6.01	NA	NA
Phenolics Recoverable	mg/l	NA	0.04 U	NA	0.01 U	NA	0.001 U	NA	0.03 UR
Battelle Sulfide (376.2 modified)	mg/l	NA	0.00205 J	NA	NA	NA	NA	NA	NA
Sulfide (376.2)	mg/l	NA	NA	NA	0.002 U	NA	0.003 U	NA	0.05 U
Temperature	C	NA	NA	NA	NA	NA	30.6	NA	NA
Total Kjeldahl Nitrogen-N	mg/l	NA	NA	NA	NA	NA	NA	NA	0.4 U
Turbidity	NTU	NA	NA	NA	0.2	NA	0.3	NA	0.16
pH	su	NA	NA	NA	NA	NA	8.2	NA	8.3

NA - Not Analyzed

TABLE 3-1
SUMMARY OF ANALYTICAL DATA
VIEQUES WATER QUALITY STUDY
NAVY CLEAN CTO-0395

Sample Designation SP-10 Dup		Battelle		Columbia		Caribtec		Savannah	
Analyte	Units	Dissolved	Total	Dissolved	Total	Dissolved	Total	Dissolved	Total
Arsenic, ICP-MS/ICP-MS/GFAA/ICP	ug/l	1.308	1.403	2.1	1.6	1 U	1 U	100 U	100 U
Arsenic, GFAA	ug/l	NA	NA	NA	NA	NA	NA	100 UR	100 UR
Barium, ICP-MS/ICP-MS/GFAA/ICP	ug/l	7.337	7.599	15	15	10 UJ	10 UJ	800 U	800 U
Barium, FAA/GFAA	ug/l	NA	NA	NA	NA	10 UJ	10 UJ	NA	NA
Boron, ICP-MS/ICP-MS/Color/ICP	ug/l	4151	4070	4800	4720	200	240	4700 B	4900
Cadmium, ICP-MS/ICP-MS/FAA/ICP	ug/l	0.00589	0.00495	0.03	0.02 U	44	44	100 U	100 U
Chromium, ICP-MS/ICP-MS/GFAA/ICP	ug/l	0.2485	0.25	10 U	10 U	1 UJ	1 UJ	300 U	300 U
Chromium, FAA/GFAA	ug/l	NA	NA	NA	NA	1 UJ	1 UJ	NA	NA
Chromium VI, ICP-MS/ICP-MS/GFAA/ICP	ug/l	0.00782 U	0.00782 U	NA	0.05 R	1 UJ	1 UJ	0.035 U	NA
Copper, ICP-MS/ICP-MS/GFAA/ICP	ug/l	0.156	0.1625	0.2 U	0.3	130	140	24 B	58 U
Copper, GFAA	ug/l	NA	NA	NA	NA	NA	NA	2 UJ	2 UJ
Iron, ICP-MS/ICP-MS/FAA/ICP	ug/l	23.5 U	23.5 U	20 U	20 U	50	54	4000 U	4000 U
Lead, ICP-MS/ICP-MS/GFAA/ICP	ug/l	0.00457	0.01105	0.03	0.04	10 UJ	10 UJ	170 U	170 U
Lead, FAA/GFAA	ug/l	NA	NA	NA	NA	10 UJ	10 UJ	NA	NA
Manganese, ICP-MS/ICP-MS/GFAA/ICP	ug/l	0.7055	1.099	5 U	5 U	1 UJ	1 UJ	100 U	100 U
Manganese, FAA	ug/l	NA	NA	NA	NA	1 UJ	1 UJ	NA	NA
Mercury, ICP-MS/ICP-MS/GFAA/ICP	ug/l	0.00108	0.00117	5 U	5 U	0.1 U	0.5	0.2 U	0.2 U
Selenium, ICP-MS/ICP-MS/GFAA/ICP	ug/l	0.694 U	0.694 U	1 U	1 U	1 U	1 U	200 U	200 U
Silver, ICP-MS/ICP-MS/GFAA/ICP	ug/l	0.254 U	0.254 U	0.1 U	0.1 U	1 U	1 U	17 B	40 U
Silver, FAA/GFAA	ug/l	NA	NA	NA	NA	1 U	1 U	10 UJ	10 UJ
Zinc, ICP-MS/ICP-MS/FAA/ICP	ug/l	0.5948 J	5.011 J	10 U	10 U	10 U	10 U	1000 U	19 B
Ammonia as Nitrogen	mg/l	NA	0.011	NA	0.05 U	NA	0.1 U	NA	0.027 B
Color	PCU	NA	5 U	NA	5 U	NA	5	NA	5 U
Cyanide	mg/l	NA	0.005 U	NA	0.001 U	NA	0.005 U	NA	0.01 U
Fluoride	mg/l	NA	0.65	NA	0.7	NA	0.646	NA	5 U
Nitrate + Nitrite-N	mg/l	NA	0.01 U	NA	0.2 U	NA	0.01 U	NA	0.05 U
Oil & Grease	mg/l	NA	1.2 J	NA	5 U	NA	5 U	NA	2 J
Oxygen	mg/l	NA	NA	NA	NA	NA	8	NA	NA
Phenolics Recoverable	mg/l	NA	0.04 U	NA	0.01	NA	0.001 U	NA	0.03 UR
Battelle Sulfide (376.2 modified)	mg/l	NA	0.00202 J	NA	NA	NA	NA	NA	NA
Sulfide (376.2)	mg/l	NA	NA	NA	0.002 U	NA	0.003 U	NA	0.05 U
Temperature	C	NA	NA	NA	NA	NA	30.5	NA	NA
Total Kjeldahl Nitrogen-N	mg/l	NA	NA	NA	NA	NA	NA	NA	0.4 U
Turbidity	NTU	NA	NA	NA	0.4	NA	0.2	NA	0.32
pH	su	NA	NA	NA	NA	NA	8.2	NA	8.2

NA - Not Analyzed

TABLE 3-1
SUMMARY OF ANALYTICAL DATA
VIEQUES WATER QUALITY STUDY
NAVY CLEAN CTO-0395

Sample Designation SP-10		Battelle		Columbia		Caribtec		Savannah	
Analyte	Units	Dissolved	Total	Dissolved	Total	Dissolved	Total	Dissolved	Total
Arsenic, ICP-MS/ICP-MS/GFAA/ICP	ug/l	1.304	1.098	2.2	2	1 U	1 U	100 U	100 U
Arsenic, GFAA	ug/l	NA	NA	NA	NA	NA	NA	100 UR	100 UR
Barium, ICP-MS/ICP-MS/GFAA/ICP	ug/l	7.4	7.552	14	16	10 UJ	10 UJ	800 U	800 U
Barium, FAA/GFAA	ug/l	NA	NA	NA	NA	10 UJ	10 UJ	NA	NA
Boron, ICP-MS/ICP-MS/Color/ICP	ug/l	4153	4045	4590	4850	200	240	4800 B	4800
Cadmium, ICP-MS/ICP-MS/FAA/ICP	ug/l	0.00597	0.01352	0.03	0.02 U	45	54	100 U	100 U
Chromium, ICP-MS/ICP-MS/GFAA/ICP	ug/l	0.275	0.2555	10 U	10 U	1 UJ	1 UJ	300 U	300 U
Chromium, FAA/GFAA	ug/l	NA	NA	NA	NA	1 UJ	1 UJ	NA	NA
Chromium VI, ICP-MS/ICP-MS/GFAA/ICP	ug/l	0.00782 U	0.00782 U	NA	0.05 R	0.001 U	0.001 U	0.035 U	NA
Copper, ICP-MS/ICP-MS/GFAA/ICP	ug/l	0.2307	0.1819	0.2 U	0.2 U	20	23	58 U	16 B
Copper, GFAA	ug/l	NA	NA	NA	NA	NA	NA	2 UJ	1.4 J
Iron, ICP-MS/ICP-MS/FAA/ICP	ug/l	23.5 U	23.5 U	20 U	20 U	8	60	470 J	4000 U
Lead, ICP-MS/ICP-MS/GFAA/ICP	ug/l	0.01451	0.02079	0.03	0.03	10 UJ	10 UJ	170 U	170 U
Lead, FAA/GFAA	ug/l	NA	NA	NA	NA	10 UJ	10 UJ	NA	NA
Manganese, ICP-MS/ICP-MS/GFAA/ICP	ug/l	0.8263	1.031	5 U	5 U	1 UJ	1 UJ	100 U	100 U
Manganese, FAA	ug/l	NA	NA	NA	NA	1 UJ	1 UJ	NA	NA
Mercury, ICP-MS/ICP-MS/GFAA/ICP	ug/l	0.00046	0.0007	5 U	5 U	0.2 U	0.1 U	0.2 U	0.2 U
Selenium, ICP-MS/ICP-MS/GFAA/ICP	ug/l	0.694 U	0.694 U	1 U	1 U	1 U	1 U	200 U	82 B
Silver, ICP-MS/ICP-MS/GFAA/ICP	ug/l	0.408	0.254 U	0.1 U	0.1 U	1 U	1 U	14 B	40 U
Silver, FAA/GFAA	ug/l	NA	NA	NA	NA	1 U	1 U	10 UJ	10 UJ
Zinc, ICP-MS/ICP-MS/FAA/ICP	ug/l	0.7429 J	0.342 UJ	10 U	10 U	10 U	10 U	1000 U	1000 U
Ammonia as Nitrogen	mg/l	NA	0.01	NA	0.05 U	NA	0.1 U	NA	0.03 U
Color	PCU	NA	5 U	NA	5 U	NA	5	NA	5 U
Cyanide	mg/l	NA	0.005 U	NA	0.001 U	NA	0.005 U	NA	0.01 U
Fluoride	mg/l	NA	0.65	NA	0.7	NA	0.55	NA	5 U
Nitrate + Nitrite-N	mg/l	NA	0.01 U	NA	0.2 U	NA	0.01 U	NA	0.05 U
Oil & Grease	mg/l	NA	1.5 J	NA	5 U	NA	5 U	NA	2.5 J
Oxygen	mg/l	NA	NA	NA	NA	NA	8	NA	NA
Phenolics Recoverable	mg/l	NA	0.04 U	NA	0.01	NA	0.001 U	NA	0.03 UR
Battelle Sulfide (376.2 modified)	mg/l	NA	0.0022 J	NA	NA	NA	NA	NA	NA
Sulfide (376.2)	mg/l	NA	NA	NA	0.002 U	NA	0.003 U	NA	0.05 U
Temperature	C	NA	NA	NA	NA	NA	30.5	NA	NA
Total Kjeldahl Nitrogen-N	mg/l	NA	NA	NA	NA	NA	NA	NA	0.4 U
Turbidity	NTU	NA	NA	NA	0.3	NA	0.2	NA	0.31
pH	su	NA	NA	NA	NA	NA	8.1	NA	8.2

NA - Not Analyzed

TABLE 3-1
SUMMARY OF ANALYTICAL DATA
VIEQUES WATER QUALITY STUDY
NAVY CLEAN CTO-0395

Sample Designation SP-11		Battelle		Columbia		Caribtec		Savannah	
Analyte	Units	Dissolved	Total	Dissolved	Total	Dissolved	Total	Dissolved	Total
Arsenic, ICP-MS/ICP-MS/GFAA/ICP	ug/l	1.102	1.42	2.3	1.6	1 U	1 U	100 U	100 U
Arsenic, GFAA	ug/l	NA	NA	NA	NA	NA	NA	100 UR	100 UR
Barium, ICP-MS/ICP-MS/GFAA/ICP	ug/l	7.504	7.674	15	13	10 UJ	10 UJ	9.5 B	800 U
Barium, FAA/GFAA	ug/l	NA	NA	NA	NA	10 UJ	10 UJ	NA	NA
Boron, ICP-MS/ICP-MS/Color/ICP	ug/l	4049	3950	4720	4680	460	510	4800 B	4900
Cadmium, ICP-MS/ICP-MS/FAA/ICP	ug/l	0.01286	0.00491	0.03	0.02 U	50	55	100 U	100 U
Chromium, ICP-MS/ICP-MS/GFAA/ICP	ug/l	0.3023	0.2818	10 U	10 U	1 UJ	1 UJ	300 U	300 U
Chromium VI, ICP-MS/ICP-MS/GFAA/I	ug/l	0.00782 U	0.00782 U	NA	0.05 R	0.001 U	0.001 U	0.035 U	NA
Cadmium, FAA/GFAA	ug/l	NA	NA	NA	NA	50	55	NA	NA
Copper, ICP-MS/ICP-MS/GFAA/ICP	ug/l	0.2362	0.169	0.2 U	0.6	1 U	1 U	18 B	58 U
Copper, GFAA	ug/l	NA	NA	NA	NA	NA	NA	2 UJ	2 UJ
Iron, ICP-MS/ICP-MS/FAA/ICP	ug/l	23.5 U	23.5 U	20 U	20 U	35	110	4000 U	380 J
Lead, ICP-MS/ICP-MS/GFAA/ICP	ug/l	0.01184	0.01808	0.04	0.04	10 UJ	10 UJ	170 U	170 U
Lead, FAA/GFAA	ug/l	NA	NA	NA	NA	10 UJ	10 UJ	NA	NA
Manganese, ICP-MS/ICP-MS/GFAA/ICI	ug/l	0.68	0.7402	5 U	5 U	1 UJ	1 UJ	100 U	100 U
Manganese, FAA	ug/l	NA	NA	NA	NA	1 UJ	1 UJ	NA	NA
Mercury, ICP-MS/ICP-MS/GFAA/ICP	ug/l	0.0007	0.00114	5 U	5 U	0.1 U	0.8	0.2 U	0.2 U
Selenium, ICP-MS/ICP-MS/GFAA/ICP	ug/l	0.694 U	0.694 U	1 U	1 U	1 U	1 U	63 B	200 U
Silver, ICP-MS/ICP-MS/GFAA/ICP	ug/l	0.254 U	0.254 U	0.1 U	0.2	1 U	1 U	40 U	40 U
Silver, FAA/GFAA	ug/l	NA	NA	NA	NA	1 U	1 U	10 UJ	10 UJ
Zinc, ICP-MS/ICP-MS/FAA/ICP	ug/l	0.342 UJ	1.143 J	10 U	10 U	10 U	10 U	50 B	1000 U
Ammonia as Nitrogen	mg/l	NA	0.01 U	NA	0.05 U	NA	0.1 U	NA	0.03 U
Color	PCU	NA	5 U	NA	5 U	NA	5	NA	5 U
Cyanide	mg/l	NA	0.005 U	NA	0.001 U	NA	0.005 U	NA	0.01 U
Fluoride	mg/l	NA	0.6	NA	0.7	NA	0.729	NA	5 U
Nitrate + Nitrite-N	mg/l	NA	0.01 U	NA	0.2 U	NA	0.01 U	NA	0.05 U
Oil & Grease	mg/l	NA	1.2 UJ	NA	5 U	NA	5 U	NA	2.5 J
Oxygen	mg/l	NA	NA	NA	NA	NA	6.9	NA	NA
Phenolics Recoverable	mg/l	NA	0.04 U	NA	0.01 U	NA	0.001 U	NA	0.03 UR
Battelle Sulfide (376.2 modified)	mg/l	NA	0.00205 J	NA	NA	NA	NA	NA	NA
Sulfide (376.2)	mg/l	NA	NA	NA	0.002 U	NA	0.003 U	NA	0.05 U
Temperature	C	NA	NA	NA	NA	NA	30.2	NA	NA
Total Kjeldahl Nitrogen-N	mg/l	NA	NA	NA	NA	NA	NA	NA	0.4 U
Turbidity	NTU	NA	NA	NA	0.2	NA	0.4	NA	0.16
pH	su	NA	NA	NA	NA	NA	8.2	NA	8.4

NA - Not Analyzed

TABLE 3-1
SUMMARY OF ANALYTICAL DATA
VIEQUES WATER QUALITY STUDY
NAVY CLEAN CTO-0395

Sample Designation SP-12		Battelle		Columbia		Caribtec		Savannah	
Analyte	Units	Dissolved	Total	Dissolved	Total	Dissolved	Total	Dissolved	Total
Arsenic, ICP-MS/ICP-MS/GFAA/ICP	ug/l	NA	NA	3.3	1.8	1 U	1 U	100 U	100 U
Arsenic, GFAA	ug/l	NA	NA	NA	NA	NA	NA	100 UR	100 UR
Barium, ICP-MS/ICP-MS/GFAA/ICP	ug/l	NA	NA	16	14	10 UJ	10 UJ	800 U	800 U
Barium, FAA/GFAA	ug/l	NA	NA	NA	NA	10 UJ	10 UJ	NA	NA
Boron, ICP-MS/ICP-MS/Color/ICP	ug/l	NA	NA	4720	4520	110	300	4800 B	4700 B
Cadmium, ICP-MS/ICP-MS/FAA/ICP	ug/l	NA	NA	0.02 U	0.02	50	67	100 U	100 U
Chromium, ICP-MS/ICP-MS/GFAA/ICP	ug/l	NA	NA	10 U	10 U	1 UJ	1 UJ	300 U	300 U
Chromium, FAA/GFAA	ug/l	NA	NA	NA	NA	1 UJ	1 UJ	NA	NA
Chromium VI, ICP-MS/ICP-MS/GFAA/ICP	ug/l	NA	NA	NA	0.05 R	0.001 U	0.001 U	0.035 U	NA
Copper, ICP-MS/ICP-MS/GFAA/ICP	ug/l	NA	NA	0.2 U	0.3	80	60	57 B	58 U
Copper, GFAA	ug/l	NA	NA	NA	NA	NA	NA	2 UJ	2 UJ
Iron, ICP-MS/ICP-MS/FAA/ICP	ug/l	NA	NA	20 U	20 U	2	21	4000 U	530 J
Lead, ICP-MS/ICP-MS/GFAA/ICP	ug/l	NA	NA	0.02 U	0.4	10 UJ	10 UJ	170 U	170 U
Lead, FAA/GFAA	ug/l	NA	NA	NA	NA	10 UJ	10 UJ	NA	NA
Manganese, ICP-MS/ICP-MS/GFAA/ICP	ug/l	NA	NA	5 U	5 U	1 UJ	1 UJ	100 U	100 U
Manganese, FAA	ug/l	NA	NA	NA	NA	1 UJ	1 UJ	NA	NA
Mercury, ICP-MS/ICP-MS/GFAA/ICP	ug/l	NA	NA	5 U	5 U	1 U	1 U	0.2 U	0.2 U
Selenium, ICP-MS/ICP-MS/GFAA/ICP	ug/l	NA	NA	1 U	1 U	1 U	1 U	63 B	58 B
Silver, ICP-MS/ICP-MS/GFAA/ICP	ug/l	NA	NA	0.1 U	0.3	1 U	1 U	40 U	40 U
Silver, FAA/GFAA	ug/l	NA	NA	NA	NA	1 U	1 U	10 UJ	10 UJ
Zinc, ICP-MS/ICP-MS/FAA/ICP	ug/l	NA	NA	10 U	10 U	16	10	93 B	31 B
Ammonia as Nitrogen	mg/l	NA	0.01	NA	0.05 U	NA	0.1 U	NA	0.034
Color	PCU	NA	5 U	NA	5 U	NA	5	NA	5 U
Cyanide	mg/l	NA	0.005 U	NA	0.001 U	NA	0.005 U	NA	0.01 U
Fluoride	mg/l	NA	0.6	NA	0.7	NA	0.55	NA	5 U
Nitrate + Nitrite-N	mg/l	NA	0.01 U	NA	0.2 U	NA	0.01 U	NA	0.05 U
Oil & Grease	mg/l	NA	1 UJ	NA	5 U	NA	5 U	NA	3.1 J
Oxygen	mg/l	NA	NA	NA	NA	NA	5.06	NA	NA
Phenolics Recoverable	mg/l	NA	0.04 U	NA	0.02	NA	0.001 U	NA	0.03 UR
Battelle Sulfide (376.2 modified)	mg/l	NA	0.00349 J	NA	NA	NA	NA	NA	NA
Sulfide (376.2)	mg/l	NA	NA	NA	0.002 U	NA	0.003	NA	0.05 U
Temperature	C	NA	NA	NA	NA	NA	29.4	NA	NA
Total Kjeldahl Nitrogen-N	mg/l	NA	NA	NA	NA	NA	NA	NA	0.4 U
Turbidity	NTU	NA	NA	NA	0.2	NA	0.3	NA	0.14
pH	su	NA	NA	NA	NA	NA	8	NA	8.3

NA - Not Analyzed

TABLE 3-2
SUMMARY OF ANALYTICAL DATA BY ANALYTE
VIEQUES WATER QUALITY STUDY
NAVY CLEAN CTO-0395

Sample Designation Arsenic		Battelle ICP-MS		Columbia ICP-MS		Caribtec GFAA		Savannah ICP	
	Units	Dissolved	Total	Dissolved	Total	Dissolved	Total	Dissolved	Total
BKGND-01	ug/l	1.235	1.142	2.3	2.4	1 U	1 U	100 U	100 U
BKGND-02	ug/l	1.228	1.385	2.2	1.8	1 U	1 U	100 U	100 U
BKGND-03	ug/l	NA	NA	2.3	1.9	1 U	1 U	100 U	100 U
BKGND-04	ug/l	1.238	1.304	3	1.7	1 U	1 U	100 U	100 U
RW-01	ug/l	1.275	1.15	2.5	1.9	1 U	1 U	100 U	100 U
RW-01 Dup	ug/l	1.336	1.206	2.5	1.8	1 U	1 U	100 U	100 U
RW-02	ug/l	1.16	1.293	2.2	2.1	1 U	1 U	100 U	100 U
RW-03	ug/l	1.305	1.004	2.9	1.8	1 U	1 U	100 U	100 U
RW-04	ug/l	1.296	1.283	2.6	2.2	1 U	1 U	100 U	100 U
RW-05	ug/l	1.274	1.485	2.1	2	1 U	1 U	100 U	100 U
RW-06	ug/l	1.29	1.11	2.5	1.8	1 U	1 U	100 U	100 U
RW-07	ug/l	1.182	1.598	1.8	2.1	1 U	1 U	100 U	100 U
RW-07 Dup	ug/l	1.426	1.511	2.2	2	1 U	1 U	100 U	100 U
RW-08	ug/l	1.018	1.617	1.8	1.8	1 UJ	1 UJ	100 U	100 U
RW-09	ug/l	1.053	1.286	2.8	2.4	1 U	1 U	100 U	100 U
RW-10	ug/l	1.179	1.238	2.8	2.3	1 U	1 U	100 U	100 U
SP-01	ug/l	1.332	1.229	3.8	2.2	1 U	1 U	100 U	100 U
SP-02	ug/l	1.16	1.218	3.7	2	1 U	1 U	100 U	100 U
SP-03	ug/l	1.203	1.116	2.1	2	1 U	1 U	100 U	100 U
SP-08	ug/l	1.352	1.258	1.8	1.7	1 U	1 U	100 U	100 U
SP-09	ug/l	1.404	1.406	2.1	1.8	1 U	1 U	100 U	100 U
SP-10	ug/l	1.304	1.098	2.2	2	1 U	1 U	100 U	100 U
SP-10 Dup	ug/l	1.308	1.403	2.1	1.6	1 U	1 U	100 U	100 U
SP-11	ug/l	1.102	1.42	2.3	1.6	1 U	1 U	100 U	100 U
SP-12	ug/l	NA	NA	3.3	1.8	1 U	1 U	100 U	100 U

NA - Not Analyzed

TABLE 3-2
SUMMARY OF ANALYTICAL DATA BY ANALYTE
VIEQUES WATER QUALITY STUDY
NAVY CLEAN CTO-0395

Sample Designation Arsenic		Battelle ICP-MS		Columbia ICP-MS		Caribtec FAA		Savannah GFAA	
	Units	Dissolved	Total	Dissolved	Total	Dissolved	Total	Dissolved	Total
BKGND-01	ug/l	NA	NA	NA	NA	NA	NA	100 UR	100 UR
BKGND-02	ug/l	NA	NA	NA	NA	NA	NA	100 UR	100 UR
BKGND-03	ug/l	NA	NA	NA	NA	NA	NA	100 UR	100 UR
BKGND-04	ug/l	NA	NA	NA	NA	NA	NA	100 UR	28 J
RW-01	ug/l	NA	NA	NA	NA	NA	NA	100 UR	100 UR
RW-01 Dup	ug/l	NA	NA	NA	NA	NA	NA	10 UR	100 UR
RW-02	ug/l	NA	NA	NA	NA	NA	NA	10 UR	100 UR
RW-03	ug/l	NA	NA	NA	NA	NA	NA	100 UR	100 UR
RW-04	ug/l	NA	NA	NA	NA	NA	NA	100 UR	100 UR
RW-05	ug/l	NA	NA	NA	NA	NA	NA	100 UR	100 UR
RW-06	ug/l	NA	NA	NA	NA	NA	NA	100 UR	100 UR
RW-07	ug/l	NA	NA	NA	NA	NA	NA	100 UR	100 UR
RW-07 Dup	ug/l	NA	NA	NA	NA	NA	NA	100 UR	100 UJ
RW-08	ug/l	NA	NA	NA	NA	NA	NA	100 UR	100 UR
RW-09	ug/l	NA	NA	NA	NA	NA	NA	100 UR	100 UR
RW-10	ug/l	NA	NA	NA	NA	NA	NA	100 UR	100 UR
SP-01	ug/l	NA	NA	NA	NA	NA	NA	100 UR	100 UR
SP-02	ug/l	NA	NA	NA	NA	NA	NA	100 UR	100 UR
SP-03	ug/l	NA	NA	NA	NA	NA	NA	100 UR	100 UR
SP-08	ug/l	NA	NA	NA	NA	NA	NA	100 UR	100 UR
SP-09	ug/l	NA	NA	NA	NA	NA	NA	100 UR	100 UR
SP-10	ug/l	NA	NA	NA	NA	NA	NA	100 UR	100 UR
SP-10 Dup	ug/l	NA	NA	NA	NA	NA	NA	100 UR	100 UR
SP-11	ug/l	NA	NA	NA	NA	NA	NA	100 UR	100 UR
SP-12	ug/l	NA	NA	NA	NA	NA	NA	100 UR	100 UR

NA - Not Analyzed

TABLE 3-2
SUMMARY OF ANALYTICAL DATA BY ANALYTE
VIEQUES WATER QUALITY STUDY
NAVY CLEAN CTO-0395

Sample Designation Barium		Battelle ICP-MS		Columbia ICP-MS		Caribtec GFAA		Savannah ICP	
	Units	Dissolved	Total	Dissolved	Total	Dissolved	Total	Dissolved	Total
BKGND-01	ug/l	7.352	7.57	12	14	10 UJ	10 UJ	800 U	800 U
BKGND-02	ug/l	7.32	7.728	13	14	10 UJ	10 UJ	800 U	800 U
BKGND-03	ug/l	NA	NA	19	12	10 UJ	10 UJ	9.5 B	800 U
BKGND-04	ug/l	7.55	7.731	17	14	10 UJ	10 UJ	800 U	10 B
RW-01	ug/l	7.383	7.542	16	15	10 UJ	10 UJ	800 U	800 U
RW-01 Dup	ug/l	7.097	7.495	20	15	10 UJ	10 J	800 U	800 U
RW-02	ug/l	7.317	7.413	16	14	10 UJ	10 UJ	800 U	800 U
RW-03	ug/l	7.218	7.517	16	15	10 UJ	10 UJ	800 U	800 U
RW-04	ug/l	7.335	7.773	16	16	10 UJ	10 UJ	800 U	800 U
RW-05	ug/l	7.36	7.603	15	16	10 UJ	10 UJ	800 U	800 U
RW-06	ug/l	7.696	7.633	18	15	10 UJ	10 UJ	800 U	14 B
RW-07	ug/l	7.312	7.661	16	13	10 UJ	10 UJ	800 U	800 U
RW-07 Dup	ug/l	7.443	7.502	12	12	10 UJ	400 J	800 U	800 U
RW-08	ug/l	7.478	7.633	16	14	NA	NA	800 U	800 U
RW-09	ug/l	7.531	7.56	14	16	10 UJ	40 J	800 U	800 U
RW-10	ug/l	7.591	7.711	14	18	10 UJ	10 UJ	800 U	800 U
SP-01	ug/l	7.042	7.62	15	15	10 UJ	10 UJ	800 U	800 U
SP-02	ug/l	7.103	7.31	14	14	10 UJ	10 UJ	800 U	16 B
SP-03	ug/l	7.304	7.529	16	14	10 UJ	10 UJ	800 U	800 U
SP-08	ug/l	7.585	7.822	16	14	10 UJ	10 UJ	800 U	12 B
SP-09	ug/l	7.572	7.7	14	12	10 UJ	10 UJ	800 U	12 B
SP-10	ug/l	7.4	7.552	14	16	10 UJ	10 UJ	800 U	800 U
SP-10 Dup	ug/l	7.337	7.599	15	15	10 UJ	10 UJ	800 U	800 U
SP-11	ug/l	7.504	7.674	15	13	10 UJ	10 UJ	9.5 B	800 U
SP-12	ug/l	NA	NA	16	14	10 UJ	10 UJ	800 U	800 U

NA - Not Analyzed

TABLE 3-2
SUMMARY OF ANALYTICAL DATA BY ANALYTE
VIEQUES WATER QUALITY STUDY
NAVY CLEAN CTO-0395

Sample Designation Barium		Battelle ICP-MS		Columbia ICP-MS		Caribtec FAA		Savannah GFAA	
	Units	Dissolved	Total	Dissolved	Total	Dissolved	Total	Dissolved	Total
BKGND-01	ug/l	NA	NA	NA	NA	10 UJ	10 UJ	NA	NA
BKGND-02	ug/l	NA	NA	NA	NA	10 UJ	10 UJ	NA	NA
BKGND-03	ug/l	NA	NA	NA	NA	10 UJ	10 UJ	NA	NA
BKGND-04	ug/l	NA	NA	NA	NA	10 UJ	10 UJ	NA	NA
RW-01	ug/l	NA	NA	NA	NA	10 UJ	10 UJ	NA	NA
RW-01 Dup	ug/l	NA	NA	NA	NA	10 UJ	10 UJ	NA	NA
RW-02	ug/l	NA	NA	NA	NA	10 UJ	10 UJ	NA	NA
RW-03	ug/l	NA	NA	NA	NA	10 UJ	10 UJ	NA	NA
RW-04	ug/l	NA	NA	NA	NA	10 UJ	10 UJ	NA	NA
RW-05	ug/l	NA	NA	NA	NA	10 UJ	10 UJ	NA	NA
RW-06	ug/l	NA	NA	NA	NA	10 UJ	10 UJ	NA	NA
RW-07	ug/l	NA	NA	NA	NA	10 UJ	10 UJ	NA	NA
RW-07 Dup	ug/l	NA	NA	NA	NA	10 UJ	10 UJ	NA	NA
RW-08	ug/l	NA	NA	NA	NA	115 J	349 J	NA	NA
RW-09	ug/l	NA	NA	NA	NA	10 UJ	10 UJ	NA	NA
RW-10	ug/l	NA	NA	NA	NA	10 UJ	10 UJ	NA	NA
SP-01	ug/l	NA	NA	NA	NA	10 UJ	10 UJ	NA	NA
SP-02	ug/l	NA	NA	NA	NA	10 UJ	10 UJ	NA	NA
SP-03	ug/l	NA	NA	NA	NA	10 UJ	10 UJ	NA	NA
SP-08	ug/l	NA	NA	NA	NA	10 UJ	10 UJ	NA	NA
SP-09	ug/l	NA	NA	NA	NA	10 UJ	10 UJ	NA	NA
SP-10	ug/l	NA	NA	NA	NA	10 UJ	10 UJ	NA	NA
SP-10 Dup	ug/l	NA	NA	NA	NA	10 UJ	10 UJ	NA	NA
SP-11	ug/l	NA	NA	NA	NA	10 UJ	10 UJ	NA	NA
SP-12	ug/l	NA	NA	NA	NA	10 UJ	10 UJ	NA	NA

NA - Not Analyzed

TABLE 3-2
SUMMARY OF ANALYTICAL DATA BY ANALYTE
VIEQUES WATER QUALITY STUDY
NAVY CLEAN CTO-0395

Sample Designation Boron		Battelle ICP-MS		Columbia ICP-MS		Caribtec Colormetric		Savannah ICP	
	Units	Dissolved	Total	Dissolved	Total	Dissolved	Total	Dissolved	Total
BKGND-01	ug/l	4144	4052	4680	4690	200	500	4600 B	5000
BKGND-02	ug/l	3744	3840	4530	4650	200	210	4600 B	5000
BKGND-03	ug/l	NA	NA	5110	4550	500	300	5000	4900
BKGND-04	ug/l	4642	4663	5090	4790	500	500	4700 J	4900
RW-01	ug/l	4701	4647	4760	4870	200	200	4800 B	5100
RW-01 Dup	ug/l	4663	4525	4960	4730	200	200	4800 B	5000
RW-02	ug/l	4158	4133	4800	4680	200	200	4800 B	4900
RW-03	ug/l	4659	4633	4870	4780	400	500	4700 J	5000
RW-04	ug/l	4096	3966	4650	4720	200	300	4600 B	4800 B
RW-05	ug/l	4077	3972	4650	4750	200	200	4800 B	4700 B
RW-06	ug/l	3926	3794	5080	4600	160	200	4700 B	5000
RW-07	ug/l	3746	3850	4860	4670	100 U	100	4600 B	5000
RW-07 Dup	ug/l	3762	3834	4650	4580	110 U	100	4300 B	4900
RW-08	ug/l	3836	3767	4680	4750	140 J	200 J	4400 B	4800 B
RW-09	ug/l	4086	4000	4640	4800	200	200	4500 B	4600 B
RW-10	ug/l	4063	4002	4570	5090	300	100	4600 B	4700 B
SP-01	ug/l	4766	4695	4820	4830	500	1000	4600 J	5000
SP-02	ug/l	4570	4638	4530	4840	200	400	4800 J	6900
SP-03	ug/l	4719	4666	4930	4740	300	300	4600 BJ	5000
SP-08	ug/l	4068	3975	4750	4510	200	300	4500 B	4900
SP-09	ug/l	4060	4020	4720	4650	200	230	4600 B	4900
SP-10	ug/l	4153	4045	4590	4850	200	240	4800 B	4800
SP-10 Dup	ug/l	4151	4070	4800	4720	200	240	4700 B	4900
SP-11	ug/l	4049	3950	4720	4680	460	510	4800 B	4900
SP-12	ug/l	NA	NA	4720	4520	110	300	4800 B	4700 B

NA - Not Analyzed

TABLE 3-2
SUMMARY OF ANALYTICAL DATA BY ANALYTE
VIEQUES WATER QUALITY STUDY
NAVY CLEAN CTO-0395

Sample Designation Cadmium		Battelle ICP-MS		Columbia ICP-MS		Caribtec FAA		Savannah ICP	
	Units	Dissolved	Total	Dissolved	Total	Dissolved	Total	Dissolved	Total
BKGND-01	ug/l	0.00906	0.00505	0.02 U	0.03	40	50	100 U	100 U
BKGND-02	ug/l	0.00516	0.00335	0.02 U	0.02 U	20	19	100 U	100 U
BKGND-03	ug/l	NA	NA	0.02	0.02 U	35	67	100 U	100 U
BKGND-04	ug/l	0.00608	0.00534	0.03	0.03	30	50	100 U	100 U
RW-01	ug/l	0.00299 U	0.00681	0.02 U	0.02	40	50	100 U	100 U
RW-01 Dup	ug/l	0.00622	0.00539	0.02 U	0.02	40	40	100 U	100 U
RW-02	ug/l	0.00367	0.00698	1.29	0.02	30	50	100 U	100 U
RW-03	ug/l	0.00356	0.00435	0.02 U	0.02 U	40	40	100 U	100 U
RW-04	ug/l	0.03044	0.00524	0.02 U	0.02 U	50	50	100 U	100 U
RW-05	ug/l	0.00461	0.00548	0.02 U	0.02 U	50	50	100 U	100 U
RW-06	ug/l	0.00326	0.0114	0.03	0.02 U	30	32	100 U	100 U
RW-07	ug/l	0.00717	0.00603	0.02	0.02	35	19	100 U	100 U
RW-07 Dup	ug/l	0.00599	0.0038	0.03	0.02 U	30	24	100 U	100 U
RW-08	ug/l	0.01163	0.00303	0.02 U	0.02 U	30 J	32 J	100 U	100 U
RW-09	ug/l	0.01241	0.00882	0.02 U	0.03	40	40	100 U	100 U
RW-10	ug/l	0.0044	0.0046	0.02 U	0.03	30	40	100 U	100 U
SP-01	ug/l	0.00752	0.00299 U	0.02 U	0.02	60	50	100 U	100 U
SP-02	ug/l	0.00412	0.00461	0.02 U	0.03	60	60	100 U	100 U
SP-03	ug/l	0.00572	0.00427	0.02 U	0.02	40	50	100 U	100 U
SP-08	ug/l	0.00612	0.00468	0.02 U	0.02 U	30	40	100 U	100 U
SP-09	ug/l	0.01124	0.00429	0.02	0.02 U	45	45	100 U	100 U
SP-10	ug/l	0.00597	0.01352	0.03	0.02 U	45	54	100 U	100 U
SP-10 Dup	ug/l	0.00589	0.00495	0.03	0.02 U	44	44	100 U	100 U
SP-11	ug/l	0.01286	0.00491	0.03	0.02 U	50	55	100 U	100 U
SP-12	ug/l	NA	NA	0.02 U	0.02	50	67	100 U	100 U

NA - Not Analyzed

TABLE 3-2
SUMMARY OF ANALYTICAL DATA BY ANALYTE
VIEQUES WATER QUALITY STUDY
NAVY CLEAN CTO-0395

Sample Designation Chromium		Battelle ICP-MS		Columbia ICP-MS		Caribtec GFAA		Savannah ICP	
	Units	Dissolved	Total	Dissolved	Total	Dissolved	Total	Dissolved	Total
BKGND-01	ug/l	0.2547	0.2742	10 U	10 U	1 UJ	1 UJ	300 U	300 U
BKGND-02	ug/l	0.2586	0.2763	10 U	10 U	1 UJ	1 UJ	300 U	300 U
BKGND-03	ug/l	NA	NA	10 U	10 U	1 UJ	1 UJ	300 U	300 U
BKGND-04	ug/l	0.2933	0.3116	10 U	10 U	1 UJ	1 UJ	300 U	300 U
RW-01	ug/l	0.2723	0.2445	10 U	10 U	1 UJ	1 UJ	300 U	300 U
RW-01 Dup	ug/l	0.2743	0.2522	10 U	10 U	1 UJ	1 UJ	300 U	300 U
RW-02	ug/l	0.2504	0.2583	10 U	10 U	1 UJ	1 UJ	300 U	300 U
RW-03	ug/l	0.2828	0.2398	10 U	10 U	1 UJ	1 UJ	300 U	300 U
RW-04	ug/l	0.2595	0.2731	10 U	10 U	1 UJ	1 UJ	300 U	300 U
RW-05	ug/l	0.2606	0.317	10 U	10 U	1 UJ	1 UJ	300 U	300 U
RW-06	ug/l	0.2551	0.2769	10 U	10 U	1 UJ	1 UJ	300 U	300 U
RW-07	ug/l	0.2532	0.2973	10 U	10 U	1 UJ	1 UJ	300 U	300 U
RW-07 Dup	ug/l	0.2664	0.2949	10 U	10 U	1 UJ	1 UJ	300 U	300 U
RW-08	ug/l	0.2873	0.2874	10 U	10 U	NA	NA	300 U	300 U
RW-09	ug/l	0.2918	0.2702	10 U	10 U	1 UJ	1 UJ	300 U	300 U
RW-10	ug/l	0.2517	0.2756	10 U	10 U	1 UJ	1 UJ	300 U	300 U
SP-01	ug/l	0.299	0.266	10 U	10 U	1 UJ	1 UJ	300 U	300 U
SP-02	ug/l	0.2697	0.2688	10 U	10 U	1 UJ	1 UJ	300 U	300 U
SP-03	ug/l	0.2612	0.2275	10 U	10 U	1 UJ	1 UJ	300 U	300 U
SP-08	ug/l	0.246	0.2399	10 U	10 U	1 UJ	1 UJ	300 U	300 U
SP-09	ug/l	0.2992	0.2596	10 U	10 U	1 UJ	1 UJ	300 U	300 U
SP-10	ug/l	0.275	0.2555	10 U	10 U	1 UJ	1 UJ	300 U	300 U
SP-10 Dup	ug/l	0.2485	0.25	10 U	10 U	1 UJ	1 UJ	300 U	300 U
SP-11	ug/l	0.3023	0.2818	10 U	10 U	1 UJ	1 UJ	300 U	300 U
SP-12	ug/l	NA	NA	10 U	10 U	1 UJ	1 UJ	300 U	300 U

NA - Not Analyzed

TABLE 3-2
SUMMARY OF ANALYTICAL DATA BY ANALYTE
VIEQUES WATER QUALITY STUDY
NAVY CLEAN CTO-0395

Sample Designation Chromium		Battelle ICP-MS		Columbia ICP-MS		Caribtec FAA		Savannah GFAA	
	Units	Dissolved	Total	Dissolved	Total	Dissolved	Total	Dissolved	Total
BKGND-01	ug/l	NA	NA	NA	NA	1 UJ	1 UJ	NA	NA
BKGND-02	ug/l	NA	NA	NA	NA	1 UJ	1 UJ	NA	NA
BKGND-03	ug/l	NA	NA	NA	NA	1 UJ	1 UJ	NA	NA
BKGND-04	ug/l	NA	NA	NA	NA	1 UJ	1 UJ	NA	NA
RW-01	ug/l	NA	NA	NA	NA	1 UJ	1 UJ	NA	NA
RW-01 Dup	ug/l	NA	NA	NA	NA	1 UJ	1 UJ	NA	NA
RW-02	ug/l	NA	NA	NA	NA	1 UJ	1 UJ	NA	NA
RW-03	ug/l	NA	NA	NA	NA	1 UJ	1 UJ	NA	NA
RW-04	ug/l	NA	NA	NA	NA	1 UJ	1 UJ	NA	NA
RW-05	ug/l	NA	NA	NA	NA	1 UJ	1 UJ	NA	NA
RW-06	ug/l	NA	NA	NA	NA	1 UJ	1 UJ	NA	NA
RW-07	ug/l	NA	NA	NA	NA	1 UJ	1 UJ	NA	NA
RW-07 Dup	ug/l	NA	NA	NA	NA	1 UJ	1 UJ	NA	NA
RW-08	ug/l	NA	NA	NA	NA	30 J	74 J	NA	NA
RW-09	ug/l	NA	NA	NA	NA	1 UJ	1 UJ	NA	NA
RW-10	ug/l	NA	NA	NA	NA	1 UJ	1 UJ	NA	NA
SP-01	ug/l	NA	NA	NA	NA	1 UJ	1 UJ	NA	NA
SP-02	ug/l	NA	NA	NA	NA	1 UJ	1 UJ	NA	NA
SP-03	ug/l	NA	NA	NA	NA	1 UJ	1 UJ	NA	NA
SP-08	ug/l	NA	NA	NA	NA	1 UJ	1 UJ	NA	NA
SP-09	ug/l	NA	NA	NA	NA	1 UJ	1 UJ	NA	NA
SP-10	ug/l	NA	NA	NA	NA	1 UJ	1 UJ	NA	NA
SP-10 Dup	ug/l	NA	NA	NA	NA	1 UJ	1 UJ	NA	NA
SP-11	ug/l	NA	NA	NA	NA	1 UJ	1 UJ	NA	NA
SP-12	ug/l	NA	NA	NA	NA	1 UJ	1 UJ	NA	NA

NA - Not Analyzed

TABLE 3-2
SUMMARY OF ANALYTICAL DATA BY ANALYTE
VIEQUES WATER QUALITY STUDY
NAVY CLEAN CTO-0395

Sample Designation Chromium VI		Battelle ICP-MS		Columbia ICP-MS		Caribtec FAA		Savannah GFAA	
	Units	Dissolved	Total	Dissolved	Total	Dissolved	Total	Dissolved	Total
BKGND-01	ug/l	0.00782 U	0.00782 U	0.05 R	0.05 U	0.001 U	0.001 U	0.035 U	0.035 U
BKGND-02	ug/l	0.00782 U	0.00782 U	0.05 R	0.05 U	0.001 U	0.001 U	0.035 U	0.035 U
BKGND-03	ug/l	NA	NA	0.05 R	0.05 U	0.001 U	0.001 U	0.035 U	0.035 U
BKGND-04	ug/l	0.00782 U	0.00782 U	0.05 R	0.01 U	0.001 U	0.001 U	0.007 U	0.007 U
RW-01	ug/l	0.00782 U	0.00782 U	0.05 R	0.05 U	0.001 U	0.001 U	0.035 U	0.035 U
RW-01 Dup	ug/l	0.00782 U	0.00782 U	0.05 R	0.05 U	0.001 U	0.001 U	0.035 U	0.035 U
RW-02	ug/l	0.00782 U	0.00782 U	0.05 R	0.05 U	0.001 U	0.001 U	0.035 U	0.035 U
RW-03	ug/l	0.00782 U	0.00782 U	0.05 R	0.05 U	0.001 U	0.001 U	0.035 U	0.035 U
RW-04	ug/l	0.00782 U	0.00782 U	0.05 R	0.05 U	0.001 U	0.001 U	0.035 U	0.035 U
RW-05	ug/l	0.00782 U	0.00782 U	0.05 R	0.05 U	0.001 U	0.001 U	0.035 U	0.035 U
RW-06	ug/l	0.00782 U	0.00782 U	0.05 R	0.05 U	0.001 U	0.001 U	0.035 U	0.035 U
RW-07	ug/l	0.00782 U	0.00782 U	0.05 R	0.05 U	0.001 U	0.001 U	0.035 U	0.035 U
RW-07 Dup	ug/l	0.00782 U	0.00782 U	0.05 R	0.05 U	0.001 U	0.001 U	0.035 U	0.035 U
RW-08	ug/l	0.00782 U	0.00782 U	0.05 R	0.05 U	0.001 UJ	0.001 UJ	0.035 U	0.035 U
RW-09	ug/l	0.00782 U	0.00782 U	0.05 R	0.05 U	0.001 U	0.001 U	0.035 U	0.035 U
RW-10	ug/l	0.00782 U	0.00782 U	0.05 R	0.05 U	0.001 U	0.001 U	0.035 U	0.035 U
SP-01	ug/l	0.00782 U	0.00782 U	0.05 R	0.01 U	0.001 U	0.001 U	0.007 U	0.007 U
SP-02	ug/l	0.00782 U	0.00782 U	0.05 R	0.01 U	0.001 U	0.001 U	0.007 U	0.007 U
SP-03	ug/l	0.00782 U	0.00782 U	0.05 R	0.05 U	0.001 U	0.001 U	0.035 U	0.035 U
SP-08	ug/l	0.00782 U	0.00782 U	0.05 R	0.05 U	0.001 U	0.001 U	0.035 U	0.035 U
SP-09	ug/l	0.00782 U	0.00782 U	0.05 R	0.05 U	0.001 U	0.001 U	0.035 U	0.035 U
SP-10	ug/l	0.00782 U	0.00782 U	0.05 R	0.05 U	0.001 U	0.001 U	0.035 U	0.035 U
SP-10 Dup	ug/l	0.00782 U	0.00782 U	0.05 R	0.05 U	0.001 U	0.001 U	0.035 U	0.035 U
SP-11	ug/l	0.00782 U	0.00782 U	0.05 R	0.05 U	0.001 U	0.001 U	0.035 U	0.035 U
SP-12	ug/l	NA	NA	0.05 R	0.05 U	0.001 U	0.001 U	0.035 U	0.035 U

NA - Not Analyzed

TABLE 3-2
SUMMARY OF ANALYTICAL DATA BY ANALYTE
VIEQUES WATER QUALITY STUDY
NAVY CLEAN CTO-0395

Sample Designation Copper		Battelle ICP-MS		Columbia ICP-MS		Caribtec GFAA		Savannah ICP	
	Units	Dissolved	Total	Dissolved	Total	Dissolved	Total	Dissolved	Total
BKGND-01	ug/l	0.3697	0.1574	0.3	0.3	30	60	58 U	58 U
BKGND-02	ug/l	0.1645	0.1755	0.3	0.3	220	20	58 U	58 U
BKGND-03	ug/l	NA	NA	0.3	0.2 U	7	60	58 U	58 U
BKGND-04	ug/l	0.4189	0.5057	0.5	0.7	170	580	58 U	58 U
RW-01	ug/l	0.3059	0.1655	0.2 U	0.5	30	50	58 U	58 U
RW-01 Dup	ug/l	0.2597	0.158	0.3	0.3	20	30	58 U	58 U
RW-02	ug/l	0.2399	0.1755	0.3	0.3	30	60	58 U	58 U
RW-03	ug/l	0.1699	0.1713	0.4	0.2	10	60	58 U	58 U
RW-04	ug/l	0.1601	0.1459	0.3	0.4	80	60	58 U	16 B
RW-05	ug/l	0.1548	0.1481	0.2	0.3	20	120	58 U	58 U
RW-06	ug/l	0.1612	0.1883	0.2	0.3	100	70	58 U	58 U
RW-07	ug/l	0.3838	0.4057	0.5	0.5	94	15	58 U	14 B
RW-07 Dup	ug/l	0.3551	0.3925	0.4	0.3	20	50	58 U	25 B
RW-08	ug/l	0.1659	0.1995	0.2 U	0.3	8 J	10 J	58 U	25 B
RW-09	ug/l	0.1475	0.1384	0.2	0.2	10	10	58 U	58 U
RW-10	ug/l	0.1431	0.1603	0.4	0.2 U	10	10	58 U	58 U
SP-01	ug/l	0.1695	0.1703	0.3	0.2	50	250	58 U	58 U
SP-02	ug/l	0.1451	0.1556	0.2	0.2	100	110	58 U	30 B
SP-03	ug/l	0.2051	0.1208	0.2 U	0.3	20	60	58 U	58 U
SP-08	ug/l	0.2226	0.1518	0.3	0.4	130	20	58 U	58 U
SP-09	ug/l	0.1543	0.1493	0.4	0.2 U	3	43	46 B	58 U
SP-10	ug/l	0.2307	0.1819	0.2 U	0.2 U	20	23	58 U	16 B
SP-10 Dup	ug/l	0.156	0.1625	0.2 U	0.3	130	140	24 B	58 U
SP-11	ug/l	0.2362	0.169	0.2 U	0.6	130	130	18 B	58 U
SP-12	ug/l	NA	NA	0.2 U	0.3	80	60	57 B	58 U

NA - Not Analyzed

TABLE 3-2
SUMMARY OF ANALYTICAL DATA BY ANALYTE
VIEQUES WATER QUALITY STUDY
NAVY CLEAN CTO-0395

Sample Designation Copper		Battelle ICP-MS		Columbia ICP-MS		Caribtec FAA		Savannah GFAA	
	Units	Dissolved	Total	Dissolved	Total	Dissolved	Total	Dissolved	Total
BKGND-01	ug/l	NA	NA	NA	NA	30	60	2 UJ	2 UJ
BKGND-02	ug/l	NA	NA	NA	NA	220	20	2 UJ	2 UJ
BKGND-03	ug/l	NA	NA	NA	NA	7	60	NA	NA
BKGND-04	ug/l	NA	NA	NA	NA	170	580	2 UJ	2 UJ
BKGND-04	ug/l	NA	NA	NA	NA	NA	NA	2 U	1.8 B
RW-01	ug/l	NA	NA	NA	NA	30	50	0.2 UJ	2 UJ
RW-01 Dup	ug/l	NA	NA	NA	NA	20	30	0.2 UJ	2 UJ
RW-02	ug/l	NA	NA	NA	NA	30	60	0.2 UJ	2 UJ
RW-03	ug/l	NA	NA	NA	NA	10	60	2 UJ	2 UJ
RW-04	ug/l	NA	NA	NA	NA	80	60	0.5 J	53 J
RW-05	ug/l	NA	NA	NA	NA	20	120	2 UJ	2 UJ
RW-06	ug/l	NA	NA	NA	NA	100	70	2 UJ	2 UJ
RW-07	ug/l	NA	NA	NA	NA	94	15	2 UJ	2 UJ
RW-07 Dup	ug/l	NA	NA	NA	NA	20	50	2 UJ	1.1 J
RW-08	ug/l	NA	NA	NA	NA	NA	NA	2 UJ	2 UJ
RW-09	ug/l	NA	NA	NA	NA	10	10	2 UJ	2 UJ
RW-10	ug/l	NA	NA	NA	NA	10	10	2 UJ	2 UJ
SP-01	ug/l	NA	NA	NA	NA	50	250	2 U	2 UJ
SP-02	ug/l	NA	NA	NA	NA	100	110	2 UJ	2 U
SP-03	ug/l	NA	NA	NA	NA	20	60	2 U	2 U
SP-08	ug/l	NA	NA	NA	NA	130	20	2 UJ	2 UJ
SP-09	ug/l	NA	NA	NA	NA	3	43	2 UJ	0.7 J
SP-10	ug/l	NA	NA	NA	NA	20	23	2 UJ	1.4 J
SP-10 Dup	ug/l	NA	NA	NA	NA	130	140	2 UJ	2 UJ
SP-11	ug/l	NA	NA	NA	NA	130	130	2 UJ	2 UJ
SP-12	ug/l	NA	NA	NA	NA	80	60	2 UJ	2 UJ

NA - Not Analyzed

TABLE 3-2
SUMMARY OF ANALYTICAL DATA BY ANALYTE
VIEQUES WATER QUALITY STUDY
NAVY CLEAN CTO-0395

Sample Designation Iron		Battelle ICP-MS		Columbia ICP-MS		Caribtec FAA		Savannah ICP	
	Units	Dissolved	Total	Dissolved	Total	Dissolved	Total	Dissolved	Total
BKGND-01	ug/l	23.5 U	23.5 U	20 U	20 U	210	330	4000 U	390 J
BKGND-02	ug/l	23.5 U	23.5 U	20 U	20 U	50	12	390 J	4000 U
BKGND-03	ug/l	NA	NA	20 U	20 U	40	21	400 J	4000 U
BKGND-04	ug/l	32.44	55.52	20 U	63	280	300	4000 U	4000 U
RW-01	ug/l	23.5 U	23.5 U	20 U	20 U	330	370	4000 U	4000 U
RW-01 Dup	ug/l	23.5 U	23.5 U	20 U	20 U	60	540	4000 U	450 J
RW-02	ug/l	23.5 U	23.5 U	20 U	20 U	120	360	4000 U	4000 U
RW-03	ug/l	30.16	23.5 U	20 U	20 U	160	680	4000 U	450 J
RW-04	ug/l	23.5 U	23.5 U	20 U	20 U	160	200	4000 U	4000 U
RW-05	ug/l	23.5 U	23.5 U	20 U	20 U	40	150	4000 U	4000 U
RW-06	ug/l	23.5 U	23.5 U	20 U	20 U	210	40	370 J	4000 U
RW-07	ug/l	23.5 U	23.5 U	20 U	20 U	200	85	4000 U	4000 U
RW-07 Dup	ug/l	23.5 U	23.5 U	20 U	20 U	260	120	4000 U	4000 U
RW-08	ug/l	23.5 U	23.5 U	20 U	20 U	80 J	30 J	4000 U	4000 U
RW-09	ug/l	23.5 U	23.5 U	20 U	20 U	40	10	4000 U	490 J
RW-10	ug/l	23.5 U	23.5 U	20 U	20 U	20	30	4000 U	4000 U
SP-01	ug/l	26.29	23.5 U	20 U	20 U	150	150	420 J	4000 U
SP-02	ug/l	23.5 U	23.5 U	20 U	20 U	160	280	4000 U	4000 U
SP-03	ug/l	23.5 U	23.5 U	20 U	20 U	120	200	4000 U	4000 U
SP-08	ug/l	23.5 U	23.5 U	20 U	20 U	80	63	390 J	670 J
SP-09	ug/l	23.5 U	23.5 U	20 U	20 U	90	100	4000 U	720 J
SP-10	ug/l	23.5 U	23.5 U	20 U	20 U	8	60	470 J	4000 U
SP-10 Dup	ug/l	23.5 U	23.5 U	20 U	20 U	50	54	4000 U	4000 U
SP-11	ug/l	23.5 U	23.5 U	20 U	20 U	35	110	4000 U	380 J
SP-12	ug/l	NA	NA	20 U	20 U	2	21	4000 U	530 J

NA - Not Analyzed

TABLE 3-2
SUMMARY OF ANALYTICAL DATA BY ANALYTE
VIEQUES WATER QUALITY STUDY
NAVY CLEAN CTO-0395

Sample Designation Lead		Battelle ICP-MS		Columbia ICP-MS		Caribtec GFAA		Savannah ICP	
	Units	Dissolved	Total	Dissolved	Total	Dissolved	Total	Dissolved	Total
BKGND-01	ug/l	0.01772	0.01154	0.03	0.04 J	10 UJ	10 UJ	170 U	170 U
BKGND-02	ug/l	0.00843	0.0098	0.03	0.15	10 UJ	10 UJ	170 U	170 U
BKGND-03	ug/l	NA	NA	0.12	0.07	10 UJ	10 UJ	170 U	170 U
BKGND-04	ug/l	0.0911	0.2643	0.5	0.53 J	10 UJ	10 UJ	170 U	170 U
RW-01	ug/l	0.00946	0.013	0.04	0.03 J	10 UJ	10 UJ	170 U	170 U
RW-01 Dup	ug/l	0.00889	0.01107	0.04	0.04 J	10 UJ	10 UJ	170 U	170 U
RW-02	ug/l	0.00724	0.00977	0.03	0.03 J	10 UJ	10 UJ	170 U	170 U
RW-03	ug/l	0.01666	0.01763	0.05	0.03 J	10 UJ	10 UJ	170 U	170 U
RW-04	ug/l	0.00976	0.01153	0.03	0.03 J	10 UJ	10 UJ	170 U	170 U
RW-05	ug/l	0.00823	0.00991	0.03	0.05 J	10 UJ	10 UJ	170 U	170 U
RW-06	ug/l	0.00793	0.01236	0.04	0.08	10 UJ	10 UJ	170 U	170 U
RW-07	ug/l	0.01006	0.01674	0.09	0.15	10 UJ	10 UJ	170 U	170 U
RW-07 Dup	ug/l	0.01167	0.02041	0.06	0.03	10 UJ	10 UJ	170 U	170 U
RW-08	ug/l	0.0097	0.01255	0.1	0.05	NA	NA	170 U	170 U
RW-09	ug/l	0.01642	0.2519	0.03	0.04 J	10 UJ	10 UJ	170 U	170 U
RW-10	ug/l	0.00765	0.00974	0.08	0.04 J	10 UJ	10 UJ	170 U	170 U
SP-01	ug/l	0.00976	0.01015	0.14	0.08 J	10 UJ	10 UJ	170 U	170 U
SP-02	ug/l	0.01181	0.01519	0.06	0.07 J	10 UJ	10 UJ	170 U	170 U
SP-03	ug/l	0.1213	0.02201	0.09	0.06 J	1 UJ	10 UJ	170 U	170 U
SP-08	ug/l	0.0096	0.02293	0.05	0.03	10 UJ	10 UJ	170 U	170 U
SP-09	ug/l	0.01662	0.0088	0.02	0.02	10 UJ	10 UJ	170 U	170 U
SP-10	ug/l	0.01451	0.02079	0.03	0.03	10 UJ	10 UJ	170 U	170 U
SP-10 Dup	ug/l	0.00457	0.01105	0.03	0.04	10 UJ	10 UJ	170 U	170 U
SP-11	ug/l	0.01184	0.01808	0.04	0.04	10 UJ	10 UJ	170 U	170 U
SP-12	ug/l	NA	NA	0.02 U	0.4	10 UJ	10 UJ	170 U	170 U

NA - Not Analyzed

TABLE 3-2
SUMMARY OF ANALYTICAL DATA BY ANALYTE
VIEQUES WATER QUALITY STUDY
NAVY CLEAN CTO-0395

Sample Designation Lead		Battelle ICP-MS		Columbia ICP-MS		Caribtec FAA		Savannah GFAA	
	Units	Dissolved	Total	Dissolved	Total	Dissolved	Total	Dissolved	Total
BKGND-01	ug/l	NA	NA	NA	NA	10 UJ	10 UJ	NA	NA
BKGND-02	ug/l	NA	NA	NA	NA	10 UJ	10 UJ	NA	NA
BKGND-03	ug/l	NA	NA	NA	NA	10 UJ	10 UJ	NA	NA
BKGND-04	ug/l	NA	NA	NA	NA	10 UJ	10 UJ	NA	NA
RW-01	ug/l	NA	NA	NA	NA	10 UJ	10 UJ	NA	NA
RW-01 Dup	ug/l	NA	NA	NA	NA	10 UJ	10 UJ	NA	NA
RW-02	ug/l	NA	NA	NA	NA	10 UJ	10 UJ	NA	NA
RW-03	ug/l	NA	NA	NA	NA	10 UJ	10 UJ	NA	NA
RW-04	ug/l	NA	NA	NA	NA	10 UJ	10 UJ	NA	NA
RW-05	ug/l	NA	NA	NA	NA	10 UJ	10 UJ	NA	NA
RW-06	ug/l	NA	NA	NA	NA	10 UJ	10 UJ	NA	NA
RW-07	ug/l	NA	NA	NA	NA	10 UJ	10 UJ	NA	NA
RW-07 Dup	ug/l	NA	NA	NA	NA	10 UJ	10 UJ	NA	NA
RW-08	ug/l	NA	NA	NA	NA	66 J	139 J	NA	NA
RW-09	ug/l	NA	NA	NA	NA	10 UJ	10 UJ	NA	NA
RW-10	ug/l	NA	NA	NA	NA	10 UJ	10 UJ	NA	NA
SP-01	ug/l	NA	NA	NA	NA	10 UJ	10 UJ	NA	NA
SP-02	ug/l	NA	NA	NA	NA	10 UJ	10 UJ	NA	NA
SP-03	ug/l	NA	NA	NA	NA	10 UJ	10 UJ	NA	NA
SP-08	ug/l	NA	NA	NA	NA	10 UJ	10 UJ	NA	NA
SP-09	ug/l	NA	NA	NA	NA	10 UJ	10 UJ	NA	NA
SP-10	ug/l	NA	NA	NA	NA	10 UJ	10 UJ	NA	NA
SP-10 Dup	ug/l	NA	NA	NA	NA	10 UJ	10 UJ	NA	NA
SP-11	ug/l	NA	NA	NA	NA	10 UJ	10 UJ	NA	NA
SP-12	ug/l	NA	NA	NA	NA	10 UJ	10 UJ	NA	NA

NA - Not Analyzed

TABLE 3-2
SUMMARY OF ANALYTICAL DATA BY ANALYTE
VIEQUES WATER QUALITY STUDY
NAVY CLEAN CTO-0395

Sample Designation Manganese		Battelle ICP-MS		Columbia ICP-MS		Caribtec GFAA		Savannah ICP	
	Units	Dissolved	Total	Dissolved	Total	Dissolved	Total	Dissolved	Total
BKGND-01	ug/l	0.6247	0.4484	5 U	5 U	1 UJ	1 UJ	100 U	100 U
BKGND-02	ug/l	0.7106	0.8385	5 U	5 U	1 UJ	1 UJ	100 U	100 U
BKGND-03	ug/l	NA	NA	5 U	5 U	1 UJ	1 UJ	100 U	100 U
BKGND-04	ug/l	1.246	2.215	5 U	5 U	1 UJ	1 UJ	100 U	100 U
RW-01	ug/l	0.5753	0.583	5 U	5 U	1 UJ	22 J	100 U	100 U
RW-01 Dup	ug/l	0.6075	0.6038	5 U	5 U	1 UJ	1 UJ	100 U	100 U
RW-02	ug/l	0.5816	0.3977	5 U	5 U	1 UJ	1 UJ	100 U	100 U
RW-03	ug/l	0.5486	0.5841	5 U	5 U	1 UJ	1 UJ	100 U	100 U
RW-04	ug/l	0.5001	0.4314	5 U	5 U	1 UJ	1 UJ	100 U	100 U
RW-05	ug/l	0.4366	0.4605	5 U	5 U	1 UJ	1 UJ	100 U	100 U
RW-06	ug/l	0.726	0.6733	5 U	5 U	1 UJ	11 J	100 U	100 U
RW-07	ug/l	0.7415	0.7601	5 U	5 U	1 UJ	2400 J	100 U	100 U
RW-07 Dup	ug/l	0.832	0.7517	5 U	5 U	1 UJ	2200 J	100 U	100 U
RW-08	ug/l	0.579	0.6516	5 U	5 U	NA	NA	100 U	100 U
RW-09	ug/l	0.5456	0.4473	5 U	8	1 UJ	1 UJ	100 U	100 U
RW-10	ug/l	0.4553	0.5203	5 U	5 U	1 UJ	1 UJ	100 U	100 U
SP-01	ug/l	0.662	0.6692	5 U	5 U	1 UJ	3 J	100 U	100 U
SP-02	ug/l	0.6555	0.5385	5 U	5 U	1 UJ	14 J	100 U	100 U
SP-03	ug/l	0.5924	0.654	5 U	5 U	1 UJ	1 UJ	100 U	100 U
SP-08	ug/l	0.5335	0.4882	5 U	5 U	1 UJ	1 UJ	100 U	100 U
SP-09	ug/l	0.6344	0.6475	5 U	5 U	1 UJ	1 UJ	100 U	100 U
SP-10	ug/l	0.8263	1.031	5 U	5 U	1 UJ	1 UJ	100 U	100 U
SP-10 Dup	ug/l	0.7055	1.099	5 U	5 U	1 UJ	1 UJ	100 U	100 U
SP-11	ug/l	0.68	0.7402	5 U	5 U	1 UJ	1 UJ	100 U	100 U
SP-12	ug/l	NA	NA	5 U	5 U	1 UJ	1 UJ	100 U	100 U

NA - Not Analyzed

TABLE 3-2
SUMMARY OF ANALYTICAL DATA BY ANALYTE
VIEQUES WATER QUALITY STUDY
NAVY CLEAN CTO-0395

Sample Designation Manganese		Battelle ICP-MS		Columbia ICP-MS		Caribtec FAA		Savannah GFAA	
	Units	Dissolved	Total	Dissolved	Total	Dissolved	Total	Dissolved	Total
BKGND-01	ug/l	NA	NA	NA	NA	1 UJ	1 UJ	NA	NA
BKGND-02	ug/l	NA	NA	NA	NA	1 UJ	1 UJ	NA	NA
BKGND-03	ug/l	NA	NA	NA	NA	1 UJ	1 UJ	NA	NA
BKGND-04	ug/l	NA	NA	NA	NA	1 UJ	1 UJ	NA	NA
RW-01	ug/l	NA	NA	NA	NA	1 UJ	22 J	NA	NA
RW-01 Dup	ug/l	NA	NA	NA	NA	1 UJ	1 UJ	NA	NA
RW-02	ug/l	NA	NA	NA	NA	1 UJ	1 UJ	NA	NA
RW-03	ug/l	NA	NA	NA	NA	1 UJ	1 UJ	NA	NA
RW-04	ug/l	NA	NA	NA	NA	1 UJ	1 UJ	NA	NA
RW-05	ug/l	NA	NA	NA	NA	1 UJ	1 UJ	NA	NA
RW-06	ug/l	NA	NA	NA	NA	1 UJ	11 J	NA	NA
RW-07	ug/l	NA	NA	NA	NA	1 UJ	2400 J	NA	NA
RW-07 Dup	ug/l	NA	NA	NA	NA	1 UJ	2200 J	NA	NA
RW-08	ug/l	NA	NA	NA	NA	36 J	44 J	NA	NA
RW-09	ug/l	NA	NA	NA	NA	1 UJ	1 UJ	NA	NA
RW-10	ug/l	NA	NA	NA	NA	1 UJ	1 UJ	NA	NA
SP-01	ug/l	NA	NA	NA	NA	1 UJ	3 J	NA	NA
SP-02	ug/l	NA	NA	NA	NA	1 UJ	14 J	NA	NA
SP-03	ug/l	NA	NA	NA	NA	1 UJ	1 UJ	NA	NA
SP-08	ug/l	NA	NA	NA	NA	1 UJ	1 UJ	NA	NA
SP-09	ug/l	NA	NA	NA	NA	1 UJ	1 UJ	NA	NA
SP-10	ug/l	NA	NA	NA	NA	1 UJ	1 UJ	NA	NA
SP-10 Dup	ug/l	NA	NA	NA	NA	1 UJ	1 UJ	NA	NA
SP-11	ug/l	NA	NA	NA	NA	1 UJ	1 UJ	NA	NA
SP-12	ug/l	NA	NA	NA	NA	1 UJ	1 UJ	NA	NA

NA - Not Analyzed

TABLE 3-2
SUMMARY OF ANALYTICAL DATA BY ANALYTE
VIEQUES WATER QUALITY STUDY
NAVY CLEAN CTO-0395

Sample Designation Mercury		Battelle ICP-MS		Columbia ICP-MS		Caribtec GFAA		Savannah ICP	
	Units	Dissolved	Total	Dissolved	Total	Dissolved	Total	Dissolved	Total
BKGND-01	ug/l	0.00087	0.00041	5 U	5 U	0.1 U	0.1 U	0.2 U	0.2 U
BKGND-02	ug/l	0.00098	0.00145	5 U	5 U	0.1	0.3	0.2 U	0.2 U
BKGND-03	ug/l	NA	NA	5 U	5 U	1 U	1 U	0.2 U	0.2 U
BKGND-04	ug/l	0.00048	0.00123	5 U	5 U	0.3 U	0.3 U	0.2 U	0.2 U
RW-01	ug/l	0.00039	0.0005	5 U	5 U	0.1 U	0.1 U	0.2 U	0.2 U
RW-01 Dup	ug/l	0.0006	0.00049	5 U	5 U	0.2	0.7	0.2 U	0.2 U
RW-02	ug/l	0.00045	0.00056	NA	5 U	0.1 U	0.7	0.2 U	0.2 U
RW-03	ug/l	0.00053	0.00055	5 U	5 U	0.1 U	0.1	0.2 U	0.2 U
RW-04	ug/l	0.00243	0.00083	5 U	5 U	0.2	0.7	0.2 U	0.2 U
RW-05	ug/l	0.00055	0.00071	5 U	5 U	0.2	0.7	0.2 U	0.2 U
RW-06	ug/l	0.00077	0.00063	5 U	5 U	0.2	0.5	0.2 U	0.2 U
RW-07	ug/l	0.00043	0.00048	5 U	5 U	0.1	0.7	0.2 U	0.2 U
RW-07 Dup	ug/l	0.00034	0.00076	5 U	5 U	0.3	0.5	0.2 U	0.2 U
RW-08	ug/l	0.00068	0.00105	5 U	5 U	0.1 J	0.7 J	0.2 U	0.2 U
RW-09	ug/l	0.00092	0.00046	5 U	5 U	0.2	0.7	0.2 U	0.2 U
RW-10	ug/l	0.00052	0.00071	5 U	5 U	0.1 U	0.7	0.2 U	0.2 U
SP-01	ug/l	0.00071	0.00065	5 U	5 U	0.3	0.7	0.2 U	0.2 U
SP-02	ug/l	0.00153	0.00076	5 U	5 U	0.1	0.3	0.2 U	0.2 U
SP-03	ug/l	0.00058	0.00143	5 U	5 U	1 U	0.3	0.2 U	0.2 U
SP-08	ug/l	0.00046	0.00074	5 U	5 U	0.1 U	0.3	0.2 U	0.2 U
SP-09	ug/l	0.00049	0.00062	5 U	5 U	0.1 U	0.5	0.2 U	0.2 U
SP-10	ug/l	0.00046	0.0007	5 U	5 U	0.2 U	0.1 U	0.2 U	0.2 U
SP-10 Dup	ug/l	0.00108	0.00117	5 U	5 U	0.1 U	0.5	0.2 U	0.2 U
SP-11	ug/l	0.0007	0.00114	5 U	5 U	0.1 U	0.8	0.2 U	0.2 U
SP-12	ug/l	NA	NA	5 U	5 U	1 U	1 U	0.2 U	0.2 U

NA - Not Analyzed

TABLE 3-2
SUMMARY OF ANALYTICAL DATA BY ANALYTE
VIEQUES WATER QUALITY STUDY
NAVY CLEAN CTO-0395

Sample Designation Selenium		Battelle ICP-MS		Columbia ICP-MS		Caribtec GFAA		Savannah ICP	
	Units	Dissolved	Total	Dissolved	Total	Dissolved	Total	Dissolved	Total
BKGND-01	ug/l	0.694 U	0.694 U	1 U	1 U	1 U	1 U	200 U	200 U
BKGND-02	ug/l	0.694 U	0.694 U	1 U	1 U	1 U	1 U	200 U	200 U
BKGND-03	ug/l	NA	NA	1 U	1 U	1 U	1 U	100 B	94 B
BKGND-04	ug/l	0.694 U	0.694 U	1 U	1 U	1 U	1 U	200 U	200 U
RW-01	ug/l	0.694 U	0.694 U	1 U	1 U	1 U	1 U	59 B	68 B
RW-01 Dup	ug/l	0.694 U	0.694 U	1 U	1 U	1 U	1 U	200 U	200 U
RW-02	ug/l	0.694 U	0.694 U	1 U	1 U	1 U	1 U	84 B	200 U
RW-03	ug/l	0.694 U	0.694 U	1 U	1 U	1 U	1 U	53 B	200 U
RW-04	ug/l	0.694 U	0.694 U	1 U	1 U	1 U	1 U	200 U	200 U
RW-05	ug/l	0.694 U	0.694 U	1 U	1 U	1 U	1 U	200 U	200 U
RW-06	ug/l	0.694 U	0.694 U	1 U	1 U	1 U	1 U	200 U	69 B
RW-07	ug/l	0.694 U	0.694 U	1 U	1 U	1 U	1 U	200 U	86 B
RW-07 Dup	ug/l	0.694 U	0.694 U	1 U	1 U	1 U	1 U	200 U	200 U
RW-08	ug/l	0.694 U	0.694 U	1 U	1 U	1 UJ	1 UJ	200 U	63 B
RW-09	ug/l	0.694 U	0.694 U	1 U	1 U	1 U	1 U	200 U	200 U
RW-10	ug/l	0.694 U	0.694 U	1 U	1 U	1 U	1 U	200 U	200 U
SP-01	ug/l	0.694 U	0.694 U	1 U	1 U	1 U	1 U	56 B	200 U
SP-02	ug/l	0.694 U	0.694 U	1 U	1 U	1 U	1 U	200 U	200 U
SP-03	ug/l	0.694 U	0.694 U	1 U	1 U	2	1 U	200 U	200 U
SP-08	ug/l	0.694 U	0.694 U	1 U	1 U	1 U	1 U	200 U	120 B
SP-09	ug/l	0.694 U	0.694 U	1 U	1 U	1 U	1 U	200 U	95 B
SP-10	ug/l	0.694 U	0.694 U	1 U	1 U	1 U	1 U	200 U	82 B
SP-10 Dup	ug/l	0.694 U	0.694 U	1 U	1 U	1 U	1 U	200 U	200 U
SP-11	ug/l	0.694 U	0.694 U	1 U	1 U	1 U	1 U	63 B	200 U
SP-12	ug/l	NA	NA	1 U	1 U	1 U	1 U	63 B	58 B

NA - Not Analyzed

TABLE 3-2
SUMMARY OF ANALYTICAL DATA BY ANALYTE
VIEQUES WATER QUALITY STUDY
NAVY CLEAN CTO-0395

Sample Designation Silver		Battelle ICP-MS		Columbia ICP-MS		Caribtec GFAA		Savannah ICP	
	Units	Dissolved	Total	Dissolved	Total	Dissolved	Total	Dissolved	Total
BKGND-01	ug/l	0.254 U	0.254 U	0.1 U	0.1 U	1 U	1 U	40 U	40 U
BKGND-02	ug/l	0.254 U	0.3281	0.1 U	0.1 U	1 U	1 U	40 U	11 B
BKGND-03	ug/l	NA	NA	0.1 U	0.1 U	1 U	1 U	40 U	40 U
BKGND-04	ug/l	0.254 U	0.254 U	0.1 U	0.1	1	4	40 U	40 U
RW-01	ug/l	0.2553	0.254 U	0.1	0.1 U	1 U	1	40 U	40 U
RW-01 Dup	ug/l	0.254 U	0.254 U	0.1	0.1 U	1 U	1 U	40 U	40 U
RW-02	ug/l	0.254 U	0.254 U	0.1 U	0.1 U	1 U	1 U	40 U	40 U
RW-03	ug/l	0.494	0.254 U	0.1 U	0.1	1	2	40 U	40 U
RW-04	ug/l	0.254 U	0.254 U	0.1 U	0.1 U	1 U	1 U	40 U	40 U
RW-05	ug/l	0.254 U	0.254 U	0.1 U	0.1 U	1 U	1 U	40 U	40 U
RW-06	ug/l	0.275	0.3519	0.1 U	0.1 U	1 U	1 U	18 B	40 U
RW-07	ug/l	0.3575	0.4211	0.1 U	0.1 U	1 U	1 U	40 U	40 U
RW-07 Dup	ug/l	0.254 U	0.403	0.1 U	0.1 U	1 U	1 U	40 U	40 U
RW-08	ug/l	0.5777	0.5628	0.1 U	0.1	NA	NA	40 U	40 U
RW-09	ug/l	0.254 U	0.7025	0.1 U	0.1 U	1 U	1 U	40 U	40 U
RW-10	ug/l	0.254 U	0.254 U	0.1	0.1 U	1 U	1 U	40 U	40 U
SP-01	ug/l	0.254 U	0.254 U	0.1 U	0.1 U	1 U	1	40 U	40 U
SP-02	ug/l	0.456	0.254 U	0.1 U	0.1 U	1	1	40 U	40 U
SP-03	ug/l	0.254 U	0.3942	0.1 U	0.2	2	5	40 U	40 U
SP-08	ug/l	0.254 U	0.2763	0.1 U	0.1 U	1 U	1 U	15 B	40 U
SP-09	ug/l	0.254 U	0.254 U	0.1 U	0.1 U	1 U	1 U	40 U	11 B
SP-10	ug/l	0.408	0.254 U	0.1 U	0.1 U	1 U	1 U	14 B	40 U
SP-10 Dup	ug/l	0.254 U	0.254 U	0.1 U	0.1 U	1 U	1 U	17 B	40 U
SP-11	ug/l	0.254 U	0.254 U	0.1 U	0.2	1 U	1 U	40 U	40 U
SP-12	ug/l	NA	NA	0.1 U	0.3	1 U	1 U	40 U	40 U

NA - Not Analyzed

TABLE 3-2
SUMMARY OF ANALYTICAL DATA BY ANALYTE
VIEQUES WATER QUALITY STUDY
NAVY CLEAN CTO-0395

Sample Designation Silver		Battelle ICP-MS		Columbia ICP-MS		Caribtec FAA		Savannah GFAA	
	Units	Dissolved	Total	Dissolved	Total	Dissolved	Total	Dissolved	Total
BKGND-01	ug/l	NA	NA	NA	NA	1 U	1 U	10 UJ	10 UJ
BKGND-02	ug/l	NA	NA	NA	NA	1 U	1 U	10 UJ	10 UJ
BKGND-03	ug/l	NA	NA	NA	NA	1 U	1 U	10 UJ	10 UJ
BKGND-04	ug/l	NA	NA	NA	NA	1 U	4 J	10 UJ	10 UJ
NRCINMS-04	ug/l	NA	NA	NA	NA	NA	NA	10 UJ	NA
RW-01	ug/l	NA	NA	NA	NA	1 U	1	10 UJ	0.75 J
RW-01 Dup	ug/l	NA	NA	NA	NA	1 U	1 U	10 UJ	10 UJ
RW-02	ug/l	NA	NA	NA	NA	1 U	1 U	10 UJ	10 UJ
RW-03	ug/l	NA	NA	NA	NA	1 U	2	10 UJ	10 UJ
RW-04	ug/l	NA	NA	NA	NA	1 U	1 U	10 UJ	10 UJ
RW-05	ug/l	NA	NA	NA	NA	1 U	1 U	10 UJ	10 UJ
RW-06	ug/l	NA	NA	NA	NA	1 U	1 U	10 UJ	10 UJ
RW-07	ug/l	NA	NA	NA	NA	1 U	1 U	10 UJ	10 UJ
RW-07 Dup	ug/l	NA	NA	NA	NA	1 U	1 U	10 UJ	10 UJ
RW-08	ug/l	NA	NA	NA	NA	10 J	52 J	10 UJ	10 UJ
RW-09	ug/l	NA	NA	NA	NA	1 U	1 U	10 UJ	10 UJ
RW-10	ug/l	NA	NA	NA	NA	1 U	1 U	10 UJ	10 UJ
SP-01	ug/l	NA	NA	NA	NA	1 U	1	10 UJ	10 UJ
SP-02	ug/l	NA	NA	NA	NA	1	1	10 UJ	10 UJ
SP-03	ug/l	NA	NA	NA	NA	1 U	5	10 UJ	10 UJ
SP-08	ug/l	NA	NA	NA	NA	1 U	12 J	10 UJ	10 UJ
SP-09	ug/l	NA	NA	NA	NA	1 U	1 U	10 UJ	10 UJ
SP-10	ug/l	NA	NA	NA	NA	1 U	1 U	10 UJ	10 UJ
SP-10 Dup	ug/l	NA	NA	NA	NA	1 U	1 U	10 UJ	10 UJ
SP-11	ug/l	NA	NA	NA	NA	1 U	1 U	10 UJ	10 UJ
SP-12	ug/l	NA	NA	NA	NA	1 U	1 U	10 UJ	10 UJ

NA - Not Analyzed

TABLE 3-2
SUMMARY OF ANALYTICAL DATA BY ANALYTE
VIEQUES WATER QUALITY STUDY
NAVY CLEAN CTO-0395

Sample Designation Zinc		Battelle ICP-MS		Columbia ICP-MS		Caribtec FAA		Savannah ICP	
	Units	Dissolved	Total	Dissolved	Total	Dissolved	Total	Dissolved	Total
BKGND-01	ug/l	1.564 J	0.768 J	10 U	17	1 U	1 U	26 B	1000 U
BKGND-02	ug/l	0.342 UJ	0.342 UJ	10 U	10 U	43	13	1000 U	15 B
BKGND-03	ug/l	NA	NA	10 U	10 U	10 U	88	39 B	120 B
BKGND-04	ug/l	1.466 J	0.9056 J	10 U	10 U	1 U	1 U	140 B	89 B
RW-01	ug/l	1.162 J	1.373 J	10 U	10 U	1 U	1 U	27 B	1000 U
RW-01 Dup	ug/l	2.118 J	0.8674 J	10 U	10 U	1 U	1 U	36 B	1000 U
RW-02	ug/l	0.9976 J	0.342 UJ	10 U	10 U	1 U	1 U	30 B	1000 U
RW-03	ug/l	0.7035 J	0.3922 J	10 U	10 U	1 U	6	24 B	1000 U
RW-04	ug/l	1.105 J	0.5251 J	10 U	10 U	1 U	1 U	14 B	47 B
RW-05	ug/l	1.682 J	0.5344 J	10 U	10 U	1 U	1 U	14 B	1000 U
RW-06	ug/l	0.342 UJ	0.342 UJ	10 U	10 U	19	17	1000 U	20 B
RW-07	ug/l	0.342 UJ	0.342 UJ	10 U	10 U	17	92	1000 U	230 B
RW-07 Dup	ug/l	0.342 UJ	0.342 UJ	10 U	10 U	31	32	1000 U	28 B
RW-08	ug/l	0.342 UJ	0.342 UJ	10 U	10 U	1 UJ	1 UJ	15 B	75 B
RW-09	ug/l	0.7929 J	0.342 UJ	10 U	10 U	1 U	1 U	1000 U	1000 U
RW-10	ug/l	0.9261 J	0.9363 J	10 U	10 U	1 U	1 U	29 B	1000 U
SP-01	ug/l	1.036 J	0.9771 J	10 U	10 U	1 U	1 U	49 B	1000 U
SP-02	ug/l	0.7913 J	0.342 UJ	10 U	10 U	1 U	1 U	53 B	23 B
SP-03	ug/l	1.441 J	0.342 UJ	10 U	10 U	1	1 U	25 B	1000 U
SP-08	ug/l	0.5233 J	1.155 J	10 U	10 U	52	38	19 B	1000 U
SP-09	ug/l	0.342 UJ	0.342 UJ	10 U	10 U	10 U	10 U	1000 U	18 B
SP-10	ug/l	0.7429 J	0.342 UJ	10 U	10 U	10 U	10 U	1000 U	1000 U
SP-10 Dup	ug/l	0.5948 J	5.011 J	10 U	10 U	10 U	10 U	1000 U	19 B
SP-11	ug/l	0.342 UJ	1.143 J	10 U	10 U	10 U	10 U	50 B	1000 U
SP-12	ug/l	NA	NA	10 U	10 U	16	10	93 B	31 B

NA - Not Analyzed

TABLE 3-2
SUMMARY OF ANALYTICAL DATA BY ANALYTE
VIEQUES WATER QUALITY STUDY
NAVY CLEAN CTO-0395

Sample Designation Ammonia as Nitrogen		Battelle 350.3		Columbia 350.1		Caribtec 350.1		Savannah 350.1	
	Units	Dissolved	Total	Dissolved	Total	Dissolved	Total	Dissolved	Total
BKGND-01	mg/l	NA	0.012	NA	0.05 U	NA	0.1 U	NA	0.038
BKGND-02	mg/l	NA	0.015	NA	0.05 U	NA	0.1 U	NA	0.03 U
BKGND-03	mg/l	NA	0.01	NA	0.05 U	NA	0.1 U	NA	0.03 U
BKGND-04	mg/l	NA	0.012	NA	0.05 U	NA	0.1 U	NA	0.027 B
RW-01	mg/l	NA	0.011	NA	0.05 U	NA	0.1 U	NA	0.053
RW-01 Dup	mg/l	NA	0.013	NA	0.05 U	NA	0.1	NA	0.018 B
RW-02	mg/l	NA	0.014	NA	0.05 U	NA	0.1 U	NA	0.016 B
RW-03	mg/l	NA	0.012	NA	0.05 U	NA	0.133	NA	0.028 B
RW-04	mg/l	NA	0.011	NA	0.05 U	NA	0.1 U	NA	0.054
RW-05	mg/l	NA	0.013	NA	0.05 U	NA	0.1 U	NA	0.017 B
RW-06	mg/l	NA	0.011	NA	0.05 U	NA	0.1 U	NA	0.03 U
RW-07	mg/l	NA	0.013	NA	0.05 U	NA	0.1 U	NA	0.055
RW-07 Dup	mg/l	NA	0.015	NA	0.05 U	NA	0.1 U	NA	0.03 U
RW-08	mg/l	NA	0.013	NA	NA	NA	0.1 UJ	NA	0.03 U
RW-09	mg/l	NA	NA	NA	0.05 U	NA	0.1 U	NA	0.052
RW-10	mg/l	NA	NA	NA	0.05 U	NA	0.1 U	NA	0.031
SP-01	mg/l	NA	0.014	NA	0.05 U	NA	0.1 U	NA	0.03 U
SP-02	mg/l	NA	0.012	NA	0.05 U	NA	0.1 U	NA	0.03 U
SP-03	mg/l	NA	0.012	NA	0.05 U	NA	0.106	NA	0.021 B
SP-08	mg/l	NA	0.01	NA	0.05 U	NA	0.1 U	NA	0.03 U
SP-09	mg/l	NA	0.01 U	NA	0.05 U	NA	0.1 U	NA	0.03 U
SP-10	mg/l	NA	0.01	NA	0.05 U	NA	0.1 U	NA	0.03 U
SP-10 Dup	mg/l	NA	0.011	NA	0.05 U	NA	0.1 U	NA	0.027 B
SP-11	mg/l	NA	0.01 U	NA	0.05 U	NA	0.1 U	NA	0.03 U
SP-12	mg/l	NA	0.01	NA	0.05 U	NA	0.1 U	NA	0.034

NA - Not Analyzed

TABLE 3-2
SUMMARY OF ANALYTICAL DATA BY ANALYTE
VIEQUES WATER QUALITY STUDY
NAVY CLEAN CTO-0395

Sample Designation Cyanide		Battelle 335.2		Columbia 335.2		Caribtec 335.3		Savannah 335.2	
	Units	Dissolved	Total	Dissolved	Total	Dissolved	Total	Dissolved	Total
BKGND-01	mg/l	NA	0.005 U	NA	0.001 U	NA	0.005 U	NA	0.01 U
BKGND-02	mg/l	NA	0.005 U	NA	0.001 U	NA	0.005 U	NA	0.01 U
BKGND-03	mg/l	NA	0.005 U	NA	0.001 U	NA	0.005 U	NA	0.01 U
BKGND-04	mg/l	NA	0.005 U	NA	0.001 U	NA	0.005 U	NA	0.01 U
RW-01	mg/l	NA	0.005 U	NA	0.001 U	NA	0.005 U	NA	0.01 U
RW-01 Dup	mg/l	NA	0.005 U	NA	0.001 U	NA	0.005 U	NA	0.01 U
RW-02	mg/l	NA	0.005 U	NA	0.001 U	NA	0.005 U	NA	0.01 U
RW-03	mg/l	NA	0.005 U	NA	0.001 U	NA	0.005 U	NA	0.01 U
RW-04	mg/l	NA	0.005 U	NA	0.001 U	NA	0.005 U	NA	0.01 U
RW-05	mg/l	NA	0.005 U	NA	0.001 U	NA	0.005 U	NA	0.01 U
RW-06	mg/l	NA	0.005 U	NA	0.001 U	NA	0.005 U	NA	0.01 U
RW-07	mg/l	NA	0.005 U	NA	0.001 U	NA	0.005 U	NA	0.01 U
RW-07 Dup	mg/l	NA	0.005 U	NA	0.001 U	NA	0.005 U	NA	0.01 U
RW-08	mg/l	NA	0.005 U	NA	0.01 U	NA	0.005 UJ	NA	0.01 U
RW-09	mg/l	NA	0.005 U	NA	0.001 U	NA	0.005 U	NA	0.01 U
RW-10	mg/l	NA	0.005 U	NA	0.001 U	NA	0.005 U	NA	0.01 U
SP-01	mg/l	NA	0.005 U	NA	0.001 U	NA	0.005 U	NA	0.01 U
SP-02	mg/l	NA	0.005 U	NA	0.001 U	NA	0.005 U	NA	0.01 U
SP-03	mg/l	NA	0.005 U	NA	0.001 U	NA	0.005 U	NA	0.01 U
SP-08	mg/l	NA	0.005 U	NA	0.001 U	NA	0.005 U	NA	0.01 U
SP-09	mg/l	NA	0.005 U	NA	0.001 U	NA	0.005 U	NA	0.01 U
SP-10	mg/l	NA	0.005 U	NA	0.001 U	NA	0.005 U	NA	0.01 U
SP-10 Dup	mg/l	NA	0.005 U	NA	0.001 U	NA	0.005 U	NA	0.01 U
SP-11	mg/l	NA	0.005 U	NA	0.001 U	NA	0.005 U	NA	0.01 U
SP-12	mg/l	NA	0.005 U	NA	0.001 U	NA	0.005 U	NA	0.01 U

NA - Not Analyzed

TABLE 3-2
SUMMARY OF ANALYTICAL DATA BY ANALYTE
VIEQUES WATER QUALITY STUDY
NAVY CLEAN CTO-0395

Sample Designation Fluoride		Battelle 340.2		Columbia 340.2		Caribtec 340.1		Savannah 300.0	
	Units	Dissolved	Total	Dissolved	Total	Dissolved	Total	Dissolved	Total
BKGND-01	mg/l	NA	0.67	NA	1	NA	0.482	NA	5 U
BKGND-02	mg/l	NA	0.6	NA	0.7 J	NA	0.409	NA	5 U
BKGND-03	mg/l	NA	0.6	NA	0.7	NA	0.715	NA	5 U
BKGND-04	mg/l	NA	0.67	NA	0.8	NA	0.376	NA	5 U
RW-01	mg/l	NA	0.64	NA	0.9	NA	0.596	NA	5 U
RW-01 Dup	mg/l	NA	0.67	NA	0.8	NA	0.609	NA	5 U
RW-02	mg/l	NA	0.67	NA	1	NA	0.667	NA	5 U
RW-03	mg/l	NA	0.64	NA	0.8	NA	0.547	NA	5 U
RW-04	mg/l	NA	0.73	NA	0.9	NA	0.605	NA	5 U
RW-05	mg/l	NA	0.6	NA	0.7	NA	0.484	NA	5 U
RW-06	mg/l	NA	0.65	NA	0.2 J	NA	0.746	NA	5 U
RW-07	mg/l	NA	0.68	NA	0.9	NA	0.561	NA	5 U
RW-07 Dup	mg/l	NA	0.68	NA	0.7	NA	0.794	NA	5 U
RW-08	mg/l	NA	0.65	NA	0.7	NA	0.516 J	NA	5 U
RW-09	mg/l	NA	0.6	NA	0.7	NA	0.544	NA	5 U
RW-10	mg/l	NA	0.63	NA	0.8	NA	0.653	NA	5 U
SP-01	mg/l	NA	0.64	NA	0.8	NA	0.523	NA	5 U
SP-02	mg/l	NA	0.67	NA	0.8	NA	0.623	NA	5 U
SP-03	mg/l	NA	0.62	NA	0.8	NA	0.441	NA	5 U
SP-08	mg/l	NA	0.58	NA	0.7	NA	0.459	NA	5 U
SP-09	mg/l	NA	0.63	NA	0.7	NA	0.703	NA	5 U
SP-10	mg/l	NA	0.65	NA	0.7	NA	0.55	NA	5 U
SP-10 Dup	mg/l	NA	0.65	NA	0.7	NA	0.646	NA	5 U
SP-11	mg/l	NA	0.6	NA	0.7	NA	0.729	NA	5 U
SP-12	mg/l	NA	0.6	NA	0.7	NA	0.55	NA	5 U

NA - Not Analyzed

TABLE 3-2
SUMMARY OF ANALYTICAL DATA BY ANALYTE
VIEQUES WATER QUALITY STUDY
NAVY CLEAN CTO-0395

Sample Designation Nitrate + Nitrite-N		Battelle 353.2		Columbia 353.2		Caribtec 353.1		Savannah 353.2	
	Units	Dissolved	Total	Dissolved	Total	Dissolved	Total	Dissolved	Total
BKGND-01	mg/l	NA	0.01 U	NA	0.2 U	NA	0.01 U	NA	0.05 U
BKGND-02	mg/l	NA	0.01 U	NA	0.2 U	NA	0.01 U	NA	0.05 U
BKGND-03	mg/l	NA	0.01 U	NA	0.2 U	NA	0.01 U	NA	0.05 U
BKGND-04	mg/l	NA	0.01 U	NA	0.2 U	NA	0.01 U	NA	5 U
RW-01	mg/l	NA	0.01 U	NA	0.2 U	NA	0.01 U	NA	0.05 U
RW-01 Dup	mg/l	NA	0.01 U	NA	0.2 U	NA	0.01 U	NA	0.05 U
RW-02	mg/l	NA	0.01 U	NA	0.2 U	NA	0.01 U	NA	0.05 U
RW-02 Dup	mg/l	NA	0.01 U	NA	NA	NA	NA	NA	NA
RW-03	mg/l	NA	0.01 U	NA	0.2 U	NA	0.01 U	NA	5 U
RW-04	mg/l	NA	0.01 U	NA	0.2 U	NA	0.01 U	NA	0.05 U
RW-05	mg/l	NA	0.01 U	NA	0.2 U	NA	0.01 U	NA	0.05 U
RW-06	mg/l	NA	0.01 U	NA	0.2 U	NA	0.01 U	NA	0.05 U
RW-07	mg/l	NA	0.01 U	NA	0.2 U	NA	0.01 U	NA	0.05 U
RW-07 Dup	mg/l	NA	0.01 U	NA	0.2 U	NA	0.01 U	NA	0.05 U
RW-08	mg/l	NA	0.01 U	NA	NA	NA	0.01 UJ	NA	0.05 U
RW-09	mg/l	NA	0.01 U	NA	0.2 U	NA	0.01 U	NA	0.05 U
RW-09 DUP	mg/l	NA	0.01 U	NA	NA	NA	NA	NA	NA
RW-10	mg/l	NA	0.01 U	NA	0.2 U	NA	0.01 U	NA	0.05 U
SP-01	mg/l	NA	0.01 U	NA	0.2 U	NA	0.01 U	NA	0.021 J
SP-02	mg/l	NA	0.01 U	NA	0.2 U	NA	0.01 U	NA	5 U
SP-03	mg/l	NA	0.01 U	NA	0.2 U	NA	0.01 U	NA	5 U
SP-08	mg/l	NA	0.01 U	NA	0.2 U	NA	0.01 U	NA	0.05 U
SP-09	mg/l	NA	0.01 U	NA	0.2 U	NA	0.01 U	NA	0.05 U
SP-10	mg/l	NA	0.01 U	NA	0.2 U	NA	0.01 U	NA	0.05 U
SP-10 Dup	mg/l	NA	0.01 U	NA	0.2 U	NA	0.01 U	NA	0.05 U
SP-11	mg/l	NA	0.01 U	NA	0.2 U	NA	0.01 U	NA	0.05 U
SP-12	mg/l	NA	0.01 U	NA	0.2 U	NA	0.01 U	NA	0.05 U

NA - Not Analyzed

TABLE 3-2
SUMMARY OF ANALYTICAL DATA BY ANALYTE
VIEQUES WATER QUALITY STUDY
NAVY CLEAN CTO-0395

Sample Designation Oil & Grease		Battelle 413.1		Columbia 413.1		Caribtec 413.1		Savannah 1664	
	Units	Dissolved	Total	Dissolved	Total	Dissolved	Total	Dissolved	Total
BKGND-01	mg/l	NA	1 U	NA	6	NA	5 U	NA	2.5 U
BKGND-02	mg/l	NA	1.1 UJ	NA	5 U	NA	5 U	NA	2.1 J
BKGND-03	mg/l	NA	1 UJ	NA	5 U	NA	5 U	NA	2.7 J
BKGND-04	mg/l	NA	1 U	NA	5 U	NA	5 U	NA	2.5 U
RW-01	mg/l	NA	1 U	NA	5	NA	5 U	NA	2.5 U
RW-01 Dup	mg/l	NA	1 U	NA	5 U	NA	5 U	NA	2.5 U
RW-02	mg/l	NA	1 U	NA	6	NA	5 U	NA	2.5 U
RW-03	mg/l	NA	2.4	NA	5 U	NA	5 U	NA	0.94 J
RW-04	mg/l	NA	1 UJ	NA	5 U	NA	5 U	NA	1.2 J
RW-05	mg/l	NA	1 UJ	NA	5 U	NA	5 U	NA	1.8 J
RW-06	mg/l	NA	1.1 UJ	NA	5 U	NA	5 U	NA	2.1 J
RW-07	mg/l	NA	1.1 UJ	NA	5 U	NA	5 U	NA	2.1 J
RW-07 Dup	mg/l	NA	1.2 J	NA	5 U	NA	5 U	NA	2.7 J
RW-08	mg/l	NA	1.1 UJ	NA	5 U	NA	5 UJ	NA	2.5 J
RW-09	mg/l	NA	1.2 J	NA	5 U	NA	5 U	NA	1.9 J
RW-10	mg/l	NA	1 UJ	NA	5 U	NA	5 U	NA	3.2 J
SP-01	mg/l	NA	1 U	NA	5 U	NA	5 U	NA	2.5 U
SP-02	mg/l	NA	1 U	NA	5 U	NA	5 U	NA	1.3 J
SP-03	mg/l	NA	1 U	NA	5 U	NA	5 U	NA	0.59 J
SP-08	mg/l	NA	1.1 UJ	NA	5 U	NA	5 U	NA	2.4 J
SP-09	mg/l	NA	1 UJ	NA	5 U	NA	5 U	NA	1.5 J
SP-10	mg/l	NA	1.5 J	NA	5 U	NA	5 U	NA	2.5 J
SP-10 Dup	mg/l	NA	1.2 J	NA	5 U	NA	5 U	NA	2 J
SP-11	mg/l	NA	1.2 UJ	NA	5 U	NA	5 U	NA	2.5 J
SP-12	mg/l	NA	1 UJ	NA	5 U	NA	5 U	NA	3.1 J

NA - Not Analyzed

TABLE 3-2
SUMMARY OF ANALYTICAL DATA BY ANALYTE
VIEQUES WATER QUALITY STUDY
NAVY CLEAN CTO-0395

Sample Designation Oxygen		Battelle		Columbia		Caribtec		Savannah	
	Units	Dissolved	Total	Dissolved	Total	Dissolved	Total	Dissolved	Total
BKGND-01	mg/l	NA	5.1	NA	NA	NA	5.6	NA	NA
BKGND-02	mg/l	NA	8.13	NA	NA	NA	8.13	NA	NA
BKGND-03	mg/l	NA	8.13	NA	NA	NA	8.1	NA	NA
BKGND-04	mg/l	NA	4.23	NA	NA	NA	6.83	NA	NA
RW-01	mg/l	NA	6.88	NA	NA	NA	6.9	NA	NA
RW-01 Dup	mg/l	NA	6.88	NA	NA	NA	6.9	NA	NA
RW-02	mg/l	NA	6.71	NA	NA	NA	6.71	NA	NA
RW-04	mg/l	NA	5.18	NA	NA	NA	6.1	NA	NA
RW-05	mg/l	NA	5.29	NA	NA	NA	6	NA	NA
RW-06	mg/l	NA	5.3	NA	NA	NA	5.31	NA	NA
RW-07	mg/l	NA	6.86	NA	NA	NA	6.86	NA	NA
RW-07 Dup	mg/l	NA	6.86	NA	NA	NA	6.86	NA	NA
RW-08	mg/l	NA	8.02	NA	NA	NA	8 J	NA	NA
RW-09	mg/l	NA	5.54	NA	NA	NA	5.85	NA	NA
RW-10	mg/l	NA	6.32	NA	NA	NA	6.32	NA	NA
SP-01	mg/l	NA	5.1	NA	NA	NA	6.9	NA	NA
SP-02	mg/l	NA	5.26	NA	NA	NA	6.8	NA	NA
SP-03	mg/l	NA	5.04	NA	NA	NA	6.97	NA	NA
SP-08	mg/l	NA	7.8	NA	NA	NA	7.91	NA	NA
SP-09	mg/l	NA	5.97	NA	NA	NA	6.01	NA	NA
SP-10	mg/l	NA	8.07	NA	NA	NA	8	NA	NA
SP-10 Dup	mg/l	NA	8.07	NA	NA	NA	8	NA	NA
SP-11	mg/l	NA	6.89	NA	NA	NA	6.9	NA	NA
SP-12	mg/l	NA	5.06	NA	NA	NA	5.06	NA	NA

NA - Not Analyzed

TABLE 3-2
SUMMARY OF ANALYTICAL DATA BY ANALYTE
VIEQUES WATER QUALITY STUDY
NAVY CLEAN CTO-0395

Sample Designation Phenolics Recoverable		Battelle 420.1		Columbia 420.1		Caribtec 420.1		Savannah 420.1	
	Units	Dissolved	Total	Dissolved	Total	Dissolved	Total	Dissolved	Total
BKGND-01	mg/l	NA	0.04 U	NA	0.01 U	NA	0.001 U	NA	0.03 U
BKGND-02	mg/l	NA	0.04 U	NA	0.01	NA	0.001 U	NA	0.03 UR
BKGND-03	mg/l	NA	0.04 U	NA	0.01	NA	0.001 U	NA	0.03 UR
BKGND-04	mg/l	NA	0.04 U	NA	0.01 U	NA	0.001 U	NA	0.032 J
RW-01	mg/l	NA	0.04 U	NA	0.01 U	NA	0.001 U	NA	0.03 U
RW-01 Dup	mg/l	NA	0.04 U	NA	0.02	NA	0.001 U	NA	0.03 U
RW-02	mg/l	NA	0.04 U	NA	0.02	NA	0.001 U	NA	0.03 U
RW-03	mg/l	NA	0.04 U	NA	0.01	NA	0.001 U	NA	0.046 J
RW-04	mg/l	NA	0.04 U	NA	0.02	NA	0.001 U	NA	0.03 U
RW-05	mg/l	NA	0.04 U	NA	0.04	NA	0.001 U	NA	0.03 U
RW-06	mg/l	NA	0.04 U	NA	0.02	NA	0.001 U	NA	0.03 UR
RW-07	mg/l	NA	0.04 U	NA	0.01 U	NA	0.001 U	NA	0.03 UR
RW-07 Dup	mg/l	NA	0.04 U	NA	0.02	NA	0.001 U	NA	0.03 UR
RW-08	mg/l	NA	0.04 U	NA	0.01	NA	0.001 UJ	NA	0.03 UR
RW-09	mg/l	NA	NA	NA	0.02	NA	0.001 U	NA	0.03 U
RW-10	mg/l	NA	0.04 U	NA	0.01 U	NA	0.001 U	NA	0.03 U
SP-01	mg/l	NA	0.04 U	NA	0.02	NA	0.001 U	NA	0.041 J
SP-02	mg/l	NA	0.04 U	NA	0.01 U	NA	0.001 U	NA	0.01 UR
SP-03	mg/l	NA	0.04 U	NA	0.01	NA	0.001 U	NA	0.03 UR
SP-08	mg/l	NA	0.04 U	NA	0.01 U	NA	0.001 U	NA	0.03 UR
SP-09	mg/l	NA	0.04 U	NA	0.01 U	NA	0.001 U	NA	0.03 UR
SP-10	mg/l	NA	0.04 U	NA	0.01	NA	0.001 U	NA	0.03 UR
SP-10 Dup	mg/l	NA	0.04 U	NA	0.01	NA	0.001 U	NA	0.03 UR
SP-11	mg/l	NA	0.04 U	NA	0.01 U	NA	0.001 U	NA	0.03 UR
SP-12	mg/l	NA	0.04 U	NA	0.02	NA	0.001 U	NA	0.03 UR

NA - Not Analyzed

TABLE 3-2
SUMMARY OF ANALYTICAL DATA BY ANALYTE
VIEQUES WATER QUALITY STUDY
NAVY CLEAN CTO-0395

Sample Designation Sulfide		Battelle 376.2		Columbia 376.2		Caribtec 376.1		Savannah 376.2	
	Units	Dissolved	Total	Dissolved	Total	Dissolved	Total	Dissolved	Total
BKGND-01	mg/l	NA	0.05 U	NA	0.002 U	NA	0.003 U	NA	0.05 U
BKGND-02	mg/l	NA	NA	NA	0.002 U	NA	0.003 U	NA	0.05 U
BKGND-03	mg/l	NA	0.05 U	NA	0.002 U	NA	0.003	NA	0.05 U
BKGND-04	mg/l	NA	0.05 U	NA	0.01	NA	0.003	NA	0.05 UJ
RW-01	mg/l	NA	0.05 U	NA	0.002	NA	0.003	NA	0.05 U
RW-01 Dup	mg/l	NA	0.05 U	NA	0.002	NA	0.003 U	NA	0.05 U
RW-02	mg/l	NA	0.05 U	NA	0.002 U	NA	0.003	NA	0.05 U
RW-03	mg/l	NA	0.05 U	NA	0.004	NA	0.003	NA	0.05 UJ
RW-04	mg/l	NA	0.00315 J	NA	0.002 U	NA	0.006	NA	0.05 U
RW-05	mg/l	NA	0.00133 J	NA	0.003	NA	0.003 U	NA	0.05 U
RW-06	mg/l	NA	0.00166 J	NA	0.002 U	NA	0.003 U	NA	0.05 U
RW-07	mg/l	NA	0.00229 J	NA	0.002 U	NA	0.003 U	NA	0.05 U
RW-07 Dup	mg/l	NA	0.00189 J	NA	0.002 U	NA	0.003 U	NA	0.05 U
RW-08	mg/l	NA	0.00278 J	NA	0.002 U	NA	0.003 J	NA	0.05 U
RW-09	mg/l	NA	0.003 J	NA	0.002 U	NA	0.003	NA	0.05 U
RW-10	mg/l	NA	0.00505 J	NA	0.002	NA	0.003 U	NA	0.05 U
SP-01	mg/l	NA	0.05 U	NA	0.003	NA	0.003 U	NA	0.05 UJ
SP-02	mg/l	NA	0.05 U	NA	0.002	NA	0.003	NA	0.05 UJ
SP-03	mg/l	NA	0.05 U	NA	0.003	NA	0.003 U	NA	0.05 UJ
SP-08	mg/l	NA	0.00178 J	NA	0.002 U	NA	0.003 U	NA	0.05 U
SP-09	mg/l	NA	0.00205 J	NA	0.002 U	NA	0.003 U	NA	0.05 U
SP-10	mg/l	NA	0.0022 J	NA	0.002 U	NA	0.003 U	NA	0.05 U
SP-10 Dup	mg/l	NA	0.00202 J	NA	0.002 U	NA	0.003 U	NA	0.05 U
SP-11	mg/l	NA	0.00205 J	NA	0.002 U	NA	0.003 U	NA	0.05 U
SP-12	mg/l	NA	0.00349 J	NA	0.002 U	NA	0.003	NA	0.05 U

NA - Not Analyzed

TABLE 3-2
SUMMARY OF ANALYTICAL DATA BY ANALYTE
VIEQUES WATER QUALITY STUDY
NAVY CLEAN CTO-0395

Sample Designation Total Kjeldahl Nitrogen-N		Battelle 353.2		Columbia		Caribtec		Savannah 351.2	
	Units	Dissolved	Total	Dissolved	Total	Dissolved	Total	Dissolved	Total
BKGND-01	mg/l	NA	NA	NA	NA	NA	NA	NA	0.2 U
BKGND-02	mg/l	NA	NA	NA	NA	NA	NA	NA	0.4 U
BKGND-03	mg/l	NA	NA	NA	NA	NA	NA	NA	0.4 U
BKGND-04	mg/l	NA	NA	NA	NA	NA	NA	NA	0.24 J
RW-01	mg/l	NA	NA	NA	NA	NA	NA	NA	0.4 U
RW-01 Dup	mg/l	NA	NA	NA	NA	NA	NA	NA	0.4 U
RW-02	mg/l	NA	NA	NA	NA	NA	NA	NA	0.4 U
RW-03	mg/l	NA	NA	NA	NA	NA	NA	NA	0.17 J
RW-04	mg/l	NA	NA	NA	NA	NA	NA	NA	0.4 U
RW-05	mg/l	NA	NA	NA	NA	NA	NA	NA	0.23
RW-06	mg/l	NA	NA	NA	NA	NA	NA	NA	0.4 U
RW-07	mg/l	NA	NA	NA	NA	NA	NA	NA	0.4 U
RW-07 Dup	mg/l	NA	NA	NA	NA	NA	NA	NA	0.4 U
RW-08	mg/l	NA	NA	NA	NA	NA	NA	NA	0.4 U
RW-09	mg/l	NA	NA	NA	NA	NA	NA	NA	0.26
RW-10	mg/l	NA	NA	NA	NA	NA	NA	NA	0.2 U
SP-01	mg/l	NA	NA	NA	NA	NA	NA	NA	0.34 J
SP-02	mg/l	NA	NA	NA	NA	NA	NA	NA	0.24 J
SP-03	mg/l	NA	NA	NA	NA	NA	NA	NA	0.2 J
SP-08	mg/l	NA	NA	NA	NA	NA	NA	NA	0.4 U
SP-09	mg/l	NA	NA	NA	NA	NA	NA	NA	0.4 U
SP-10	mg/l	NA	NA	NA	NA	NA	NA	NA	0.4 U
SP-10 Dup	mg/l	NA	NA	NA	NA	NA	NA	NA	0.4 U
SP-11	mg/l	NA	NA	NA	NA	NA	NA	NA	0.4 U
SP-12	mg/l	NA	NA	NA	NA	NA	NA	NA	0.4 U

NA - Not Analyzed

TABLE 3-2
SUMMARY OF ANALYTICAL DATA BY ANALYTE
VIEQUES WATER QUALITY STUDY
NAVY CLEAN CTO-0395

Sample Designation Temperature		Battelle		Columbia		Caribtec		Savannah	
	Units	Dissolved	Total	Dissolved	Total	Dissolved	Total	Dissolved	Total
BKGND-01	C	NA	28.1	NA	NA	NA	28.1	NA	NA
BKGND-02	C	NA	29.0	NA	NA	NA	29.1	NA	NA
BKGND-03	C	NA	30.2	NA	NA	NA	30.2	NA	NA
BKGND-04	C	NA	30.1	NA	NA	NA	29.1	NA	NA
RW-01	C	NA	27.8	NA	NA	NA	27.25	NA	NA
RW-01 Dup	C	NA	27.8	NA	NA	NA	27.26	NA	NA
RW-02	C	NA	27.8	NA	NA	NA	27	NA	NA
RW-04	C	NA	28.9	NA	NA	NA	28.1	NA	NA
RW-05	C	NA	29.3	NA	NA	NA	29.3	NA	NA
RW-06	C	NA	29.6	NA	NA	NA	29.6	NA	NA
RW-07	C	NA	31.1	NA	NA	NA	31	NA	NA
RW-07 Dup	C	NA	31.1	NA	NA	NA	31	NA	NA
RW-08	C	NA	29.7	NA	NA	NA	29.7 J	NA	NA
RW-09	C	NA	29.3	NA	NA	NA	29.3	NA	NA
RW-10	C	NA	29.3	NA	NA	NA	29.3	NA	NA
SP-01	C	NA	29.0	NA	NA	NA	28.7	NA	NA
SP-02	C	NA	29.1	NA	NA	NA	27.4	NA	NA
SP-03	C	NA	28.9	NA	NA	NA	28.1	NA	NA
SP-08	C	NA	29.5	NA	NA	NA	29.5	NA	NA
SP-09	C	NA	30.3	NA	NA	NA	30.6	NA	NA
SP-10	C	NA	30.1	NA	NA	NA	30.5	NA	NA
SP-10 Dup	C	NA	30.1	NA	NA	NA	30.5	NA	NA
SP-11	C	NA	30.4	NA	NA	NA	30.2	NA	NA
SP-12	C	NA	29.4	NA	NA	NA	29.4	NA	NA

NA - Not Analyzed

TABLE 3-2
SUMMARY OF ANALYTICAL DATA BY ANALYTE
VIEQUES WATER QUALITY STUDY
NAVY CLEAN CTO-0395

Sample Designation pH		Battelle		Columbia		Caribtec (Field)		Savannah 150.1	
	Units	Dissolved	Total	Dissolved	Total	Dissolved	Total	Dissolved	Total
BKGND-01	su	NA	8.00	NA	NA	NA	8.2	NA	8.4
BKGND-02	su	NA	8.19	NA	NA	NA	8.2	NA	8.4
BKGND-03	su	NA	8.20	NA	NA	NA	8.2	NA	8.4
BKGND-04	su	NA	8.00	NA	NA	NA	8.5	NA	7.9
RW-01	su	NA	7.24	NA	NA	NA	6.91	NA	8.3
RW-01 Dup	su	NA	7.24	NA	NA	NA	6.94	NA	8.3
RW-02	su	NA	7.76	NA	NA	NA	8.2	NA	8.3
RW-03	su	NA	7.47	NA	NA	NA	8.1	NA	8.2
RW-04	su	NA	7.99	NA	NA	NA	8.1	NA	8.3
RW-05	su	NA	8.16	NA	NA	NA	8.1	NA	8.3
RW-06	su	NA	8.14	NA	NA	NA	8.1	NA	8.3
RW-07	su	NA	8.24	NA	NA	NA	8.2	NA	8.4
RW-07 Dup	su	NA	8.24	NA	NA	NA	8.2	NA	8.4
RW-08	su	NA	8.04	NA	NA	NA	8.1 J	NA	8.3
RW-09	su	NA	8.19	NA	NA	NA	8.2	NA	8.3
RW-10	su	NA	8.19	NA	NA	NA	8.2	NA	8.3
SP-01	su	NA	8.10	NA	NA	NA	8.3	NA	7.7
SP-02	su	NA	7.74	NA	NA	NA	8.2	NA	8
SP-03	su	NA	7.36	NA	NA	NA	8.2	NA	8.1
SP-08	su	NA	8.02	NA	NA	NA	8	NA	8.3
SP-09	su	NA	8.15	NA	NA	NA	8.2	NA	8.3
SP-10	su	NA	8.10	NA	NA	NA	8.1	NA	8.2
SP-10 Dup	su	NA	8.10	NA	NA	NA	8.1	NA	8.2
SP-11	su	NA	8.20	NA	NA	NA	8.2	NA	8.4
SP-12	su	NA	8.00	NA	NA	NA	8	NA	8.3

NA - Not Analyzed

TABLE 3-2
SUMMARY OF ANALYTICAL DATA BY ANALYTE
VIEQUES WATER QUALITY STUDY
NAVY CLEAN CTO-0395

Sample Designation Turbidity		Battelle		Columbia 180.1		Caribtec 180.1		Savannah 180.1	
	Units	Dissolved	Total	Dissolved	Total	Dissolved	Total	Dissolved	Total
BKGND-01	NTU	NA	10 U	NA	0.1	NA	0.2	NA	0.14
BKGND-02	NTU	NA	3	NA	0.1	NA	0.2	NA	0.15
BKGND-03	NTU	NA	3	NA	0.2	NA	0.3	NA	0.18
BKGND-04	NTU	NA	1	NA	0.9	NA	0.2	NA	1.7
RW-01	NTU	NA	10 U	NA	0.2	NA	0.3	NA	0.21
RW-01 Dup	NTU	NA	10 U	NA	0.2	NA	0.3	NA	0.2
RW-02	NTU	NA	10 U	NA	0.2	NA	0.3	NA	0.19
RW-03	NTU	NA	2	NA	0.2	NA	0.2	NA	0.16
RW-04	NTU	NA	10 U	NA	0.1	NA	0.2	NA	0.18
RW-05	NTU	NA	10 U	NA	0.1	NA	0.3	NA	0.13
RW-06	NTU	NA	3	NA	0.1	NA	0.3	NA	0.16
RW-07	NTU	NA	2	NA	0.3	NA	0.3	NA	0.17
RW-07 Dup	NTU	NA	2	NA	0.2	NA	0.4	NA	0.16
RW-08	NTU	NA	3	NA	0.1	NA	0.2 J	NA	0.15
RW-09	NTU	NA	10 U	NA	0.1	NA	0.2	NA	0.18
RW-10	NTU	NA	10 U	NA	0.1 U	NA	0.3	NA	0.16
SP-01	NTU	NA	NA	NA	0.1	NA	0.2	NA	0.15
SP-02	NTU	NA	10 U	NA	0.3	NA	0.3	NA	0.13
SP-03	NTU	NA	2	NA	0.1	NA	0.2	NA	0.2
SP-08	NTU	NA	2	NA	0.1	NA	0.2	NA	0.14
SP-09	NTU	NA	3	NA	0.2	NA	0.3	NA	0.16
SP-10	NTU	NA	1	NA	0.3	NA	0.2	NA	0.31
SP-10 Dup	NTU	NA	1	NA	0.4	NA	0.2	NA	0.32
SP-11	NTU	NA	3	NA	0.2	NA	0.4	NA	0.16
SP-12	NTU	NA	4	NA	0.2	NA	0.3	NA	0.14

NA - Not Analyzed

TABLE 3-2
SUMMARY OF ANALYTICAL DATA BY ANALYTE
VIEQUES WATER QUALITY STUDY
NAVY CLEAN CTO-0395

Sample Designation Color		Battelle 110.2		Columbia 110.2		Caribtec 110.1		Savannah 110.2	
	Units	Dissolved	Total	Dissolved	Total	Dissolved	Total	Dissolved	Total
BKGND-01	PCU	NA	5 U	NA	5 U	NA	5	NA	5 U
BKGND-02	PCU	NA	5 U	NA	5 U	NA	5	NA	5 U
BKGND-03	PCU	NA	5 U	NA	5 U	NA	5	NA	5 U
BKGND-04	PCU	NA	5 U	NA	5 U	NA	5	NA	5
RW-01	PCU	NA	5 U	NA	5 U	NA	5	NA	5 U
RW-01 Dup	PCU	NA	5 U	NA	5 U	NA	5	NA	5 U
RW-02	PCU	NA	5 U	NA	5 U	NA	5	NA	5 U
RW-02 Dup	PCU	NA	5 U	NA	NA	NA	NA	NA	NA
RW-03	PCU	NA	5 U	NA	5 U	NA	5	NA	5 U
RW-04	PCU	NA	5 U	NA	5 U	NA	5	NA	5 U
RW-05	PCU	NA	5 U	NA	5 U	NA	5	NA	5 U
RW-06	PCU	NA	5 U	NA	5 U	NA	5	NA	5 U
RW-07	PCU	NA	5 U	NA	5 U	NA	5	NA	5 U
RW-07 Dup	PCU	NA	5 U	NA	5 U	NA	5	NA	5 U
RW-08	PCU	NA	5 U	NA	5 U	NA	5 J	NA	5 U
RW-09	PCU	NA	5 U	NA	5 U	NA	5	NA	5 U
RW-10	PCU	NA	5 U	NA	5 U	NA	5	NA	5 U
SP-01	PCU	NA	5 U	NA	5 U	NA	5	NA	5 U
SP-02	PCU	NA	5 U	NA	5 U	NA	5	NA	5
SP-03	PCU	NA	5 U	NA	5 U	NA	5	NA	5 U
SP-08	PCU	NA	5 U	NA	5 U	NA	5	NA	5 U
SP-09	PCU	NA	5 U	NA	5 U	NA	5	NA	5 U
SP-10	PCU	NA	5 U	NA	5 U	NA	5	NA	5 U
SP-10 Dup	PCU	NA	5 U	NA	5 U	NA	5	NA	5 U
SP-11	PCU	NA	5 U	NA	5 U	NA	5	NA	5 U
SP-12	PCU	NA	5 U	NA	5 U	NA	5	NA	5 U

NA - Not Analyzed

TABLE 3-3
COMPARISON OF ANALYTICAL METHODS AND WATER QUALITY CRITERIA TO DETECTION LIMITS
VIEQUES WATER QUALITY STUDY
NAVY CLEAN CTO-0395

	Water Quality	Detection Limits											
		Battelle			Columbia			Caribtec			Savannah		
Analyte	Criteria	Method	Dissolved	Total	Method	Dissolved	Total	Method	Dissolved	Total	Method	Dissolved	Total
Metals (ug/l)													
Arsenic	1.4	1640	1.018-1.426	1.004-1.617	200.8M	0.5	0.5	3113B	1	1	200.7	5-100	5-100
Arsenic	1.4		NA	NA		NA	NA		NA	NA	206.2	10-100	10-100
Barium	1000	1638	7.042-7.696	7.36-7.822	6010B	5	5	3111B	10	10	200.7	50-1000	50-1000
Barium	1000		NA	NA		NA	NA	208.1	ND	ND		NA	NA
Boron	NE	1638	3744-4766	3767-4695	6010B	50	50	200.7	100	ND	200.7	NA	5-4800
Cadmium	5	1640	0.00299-0.03044	0.00299-0.015	200.8M	0.02	0.02	213.1	ND	ND	200.7	5-100	5-100
Chromium	300	1640	0.246-0.3023	0.2275-0.317	6010B	10	10		1	1	200.7	15-300	15-300
Chromium	300		NA	NA		NA	NA	218.1	ND	ND		NA	NA
Chromium VI	NE	1636	0.00782	0.00782	7196A	0.05	0.05	218.4	0.001	0.001	7196	10-50	10-50
Copper	2.4*	1640	0.1431-0.4189	0.1208-0.5052	200.8M	0.2	0.2	3111B	ND	ND	200.7	2.9-58	2.9-58
Copper	2.4*		NA	NA		NA	NA		NA	NA	220.2	0.2-2	2
Iron	NE	1638	23.5	23.5-55.52	6010B	20	20	236.1	ND	ND	200.7	4000	4000
Lead	8.1*	1640	0.00457-0.1213	0.0088-0.2643	200.8M	0.02	0.02	200.7	10	10	200.7	8.5-170	8.5-170
Lead	8.1*		NA	NA		NA	NA	239.1	ND	ND		NA	NA
Manganese	100	1638	0.4366-1.246	0.3977-2.215	6010B	5	5	200.7	1	1	200.7	5-100	5-100
Manganese	100		NA	NA		NA	NA	243.1	10	ND		NA	NA
Mercury	0.025	1631	0.00034-0.00243	0.00041-0.00145	1631M	5	5	245.2	1	0.1	245.1	0.2	0.2
Selenium	10	1640	0.694	0.694	SM 3114B	1	1	270.2	1	1	200.7	10-200	10-200
Silver	2	1638	0.254	0.254	200.8M	0.1	0.1	3113B	1	1	200.7	2-40	2-40
Silver	2		NA	NA		NA	NA	272.1	ND	10	272.2	2-10	2-10
Zinc	50	1638	0.342-2.198	0.342-5.011	6010B	10	10	200.7	1	1	200.7	50-1000	50-1000
Conventional (mg/l)													
Ammonia as Nitrogen	NE	350.3	NA	0.01	350.1	NA	0.05	218.4	NA	0.1	350.1	NA	0.03
Cyanide	0.001	335.2	NA	0.005	335.2	NA	0.001	335.3	NA	0.005	335.2	NA	0.01
Fluoride	1.3	340.2	NA	ND	340.2	NA	0.2	340.1	NA	ND	300.0	NA	0.1-5
Nitrate + Nitrite-N	NE	353.2	NA	0.01	353.2	NA	0.2	353.1	NA	0.01	353.2	NA	0.05-5
Oil & Grease	NE	413.1	NA	1	413.1	NA	5	413.1	NA	5	1664	NA	5-15
Oxygen	NE		NA	NA		NA	NA	638	NA	ND		NA	NA
Phenolics Recoverable	0.01	420.1	NA	0.04	420.1	NA	0.01	420.1	NA	0.001	420.1	NA	0.01-0.05
Sulfide (Modified)	0.002	376.2**	NA	0.05		NA	NA	376.2	NA	NA		NA	NA
Sulfide	0.002	376.2	NA	NA	376.2	NA	0.002	376.2	NA	0.003	376.2	NA	0.1
Total Kjeldahl Nitrogen-N	NE		NA	NA		NA	NA		NA	NA	351.2	NA	0.2-0.4
Temperature	NE		NA	NA		NA	NA	170.1	NA	ND		NA	NA
pH	7.3-8.5		NA	NA		NA	NA	150.1	NA	ND	150.1	NA	NA
Turbidity (NTU)	10		NA	NA	180.1	NA	0.1	180.1	NA	ND	180.1	NA	NA
Color	NE	110.2	NA	5	110.2	NA	5	110.1	NA	ND	110.2	NA	5

Notes:

NE - Not established
NA - Not analysed
* Dissolved Criteria
** Modified Method

TABLE 3-4
VIEQUES WATER QUALITY STUDY
FIELD BLANK ANALYTICAL RESULTS
NAVY CLEAN CTO-0395

Sample Designation FB-10/11/99		Battelle		Columbia		Caribtec		Savannah	
Analyte	Units	Dissolved	Total	Dissolved	Total	Dissolved	Total	Dissolved	Total
Arsenic, ICP	ug/l	0.0436 U	0.03523	0.5 U	0.5 U	1 U	1 U	5 U	5 U
Arsenic, GFAA	ug/l	NA	NA	NA	NA	1 U	1 U	10 U	10 U
Barium, ICP	ug/l	0.00564 U	0.4967	5 U	5 U	10 UJ	10 UJ	40 U	40 U
Barium, GFAA	ug/l	NA	NA	NA	NA	10 UJ	10 UJ	NA	NA
Boron, ICP	ug/l	0.191 U	0.9009	50 U	50 U	100 U	100 U	240 U	240 U
Cadmium, ICP	ug/l	0.015 U	0.015 U	0.02 U	0.02 U	30	40	5 U	5 U
Chromium, ICP	ug/l	0.06705	0.286	10 U	10 U	1 UJ	1 UJ	15 U	15 U
Chromium, GFAA	ug/l	NA	NA	NA	NA	1 UJ	1 UJ	NA	NA
Chromium VI, ICP-MS/ICP-MS/GFAA/ICP	ug/l	0.00065 U	0.00065 U	NA	0.05 R	0.001 U	0.001 U	0.007 U	0.007 U
Copper, ICP	ug/l	0.01394	0.06848	0.2 U	0.2	170	260	2.9 U	0.76 B
Copper, GFAA	ug/l	NA	NA	NA	NA	170	260	2 U	2 U
Iron, ICP	ug/l	6.241	8.751	20 U	20 U	160	300	200 U	200 U
Lead, ICP	ug/l	0.02035	0.08263	0.15	0.08 J	10 UJ	10 UJ	8.5 U	8.5 U
Lead, GFAA	ug/l	NA	NA	NA	NA	10 UJ	10 UJ	NA	NA
Manganese, ICP	ug/l	0.01337	0.03039	5 U	5 U	2 J	14 J	5 U	5 U
Manganese, GFAA	ug/l	NA	NA	NA	NA	2 J	14 J	NA	NA
Mercury	ug/l	0.0003	0.00043	5 U	5 U	0.1 U	0.1 U	0.2 U	0.2 U
Selenium, ICP	ug/l	0.394 U	0.394 U	1 U	1 U	1 U	1 U	10 U	10 U
Silver, ICP	ug/l	0.00429 U	0.00429 U	0.1 U	0.1	1 U	1 U	2 U	2 U
Silver, GFAA	ug/l	NA	NA	NA	NA	1 U	1 U	2 U	2 U
Zinc, ICP	ug/l	0.06694 J	1.705 J	10 U	10 U	15	25	2.6 B	6.4 B
Ammonia as Nitrogen	mg/l	NA	0.011	NA	0.05 U	NA	0.1 U	NA	0.02 B
Color	PCU	NA	5 U	NA	5 U	NA	5 U	NA	5 U
Cyanide	mg/l	NA	0.005 U	NA	0.001 U	NA	0.005 U	NA	0.01 U
Fluoride	mg/l	NA	0.1 U	NA	0.2 U	NA	0.105	NA	0.5 U
Nitrate + Nitrite-N	mg/l	NA	0.01 U	NA	0.2 U	NA	0.01 U	NA	5 U
Oil & Grease	mg/l	NA	1 U	NA	6	NA	5 U	NA	2.5 U
Oxygen	mg/l	NA	NA	NA	NA	NA	8.1	NA	NA
Phenolics Recoverable	mg/l	NA	0.04 U	NA	0.02	NA	0.001 U	NA	0.041 J
Sulfide	mg/l	NA	0.05 U	NA	0.002 U	NA	0.003	NA	0.05 UJ
Temperature	C	NA	NA	NA	NA	NA	27.1	NA	0.2 UJ
Turbidity	NTU	NA	NA	NA	0.1 U	NA	0.1	NA	0.13
pH	su	NA	NA	NA	NA	NA	7.3	NA	8.8

TABLE 3-4
VIEQUES WATER QUALITY STUDY
FIELD BLANK ANALYTICAL RESULTS
NAVY CLEAN CTO-0395

Sample Designation FB-10/12/99		Battelle		Columbia		Caribtec		Savannah	
Analyte	Units	Dissolved	Total	Dissolved	Total	Dissolved	Total	Dissolved	Total
Arsenic, ICP	ug/l	0.3182	0.1435	0.5 U	0.5 U	1 U	1 U	5 U	5 U
Arsenic, GFAA	ug/l	NA	NA	NA	NA	1 U	1 U	10 U	10 U
Barium, ICP	ug/l	0.3056	0.00575	5 U	5 U	10 UJ	10 UJ	40 U	40 U
Barium, GFAA	ug/l	NA	NA	NA	NA	10 UJ	10 UJ	NA	NA
Boron, ICP	ug/l	7.035	12.02	50 U	50 U	100	100	240 U	5.9 B
Cadmium, ICP	ug/l	0.02125	0.05263	0.02 U	0.02 U	50	60	5 U	5 U
Chromium, ICP	ug/l	2.074	2.094	10 U	10 U	1 UJ	1 UJ	15 U	15 U
Chromium, GFAA	ug/l	NA	NA	NA	NA	1 UJ	1 UJ	NA	NA
Chromium VI, ICP-MS/ICP-MS/GFAA/ICP	ug/l	0.00065 U	0.00065 U	NA	0.05 R	0.001 U	0.001 U	0.007 U	0.007 U
Copper, ICP	ug/l	0.1511	0.1939	0.2 U	0.3	20	70	2.9 U	0.92 B
Copper, GFAA	ug/l	NA	NA	NA	NA	20	70	2 U	2 U
Iron, ICP	ug/l	1.36 U	1.36 U	31	20 U	150	230	200 U	200 U
Lead, ICP	ug/l	0.3751	0.1216	0.03	0.04 J	10 UJ	10 UJ	8.5 U	8.5 U
Lead, GFAA	ug/l	NA	NA	NA	NA	10 UJ	10 UJ	NA	NA
Manganese, ICP	ug/l	0.394 U	0.02016	5 U	5 U	2 J	2 J	5 U	5 U
Mercury	ug/l	0.00058	0.00029	5 U	5 U	0.1 U	0.1	0.2 U	0.2 U
Selenium, ICP	ug/l	0.394 U	0.394 U	1 U	1 U	1 U	1 U	10 U	10 U
Silver, ICP	ug/l	0.00429 U	0.254 U	0.1 U	0.1 U	1 U	1 U	2 U	2 U
Silver, GFAA	ug/l	NA	NA	NA	NA	1 U	1 U	2 U	2 U
Zinc, ICP	ug/l	0.805 J	0.8604 J	10 U	10 U	1	1	8.7 B	6.7 B
Ammonia as Nitrogen	mg/l	NA	0.008 U	NA	0.05 U	NA	0.1 U	NA	0.061
Color	PCU	NA	5 U	NA	5 U	NA	5	NA	5 U
Cyanide	mg/l	NA	0.005 U	NA	0.001 U	NA	0.005 U	NA	0.01 U
Fluoride	mg/l	NA	0.1 U	NA	0.2 U	NA	0.112	NA	0.1 U
Nitrate + Nitrite-N	mg/l	NA	0.01 U	NA	0.2 U	NA	0.01 U	NA	0.07 J
Oil & Grease	mg/l	NA	1 U	NA	7	NA	5 U	NA	0.94 J
Oxygen	mg/l	NA	NA	NA	NA	NA	7.9	NA	NA
Phenolics Recoverable	mg/l	NA	0.04 U	NA	0.01 U	NA	0.001 U	NA	0.028 J
Sulfide	mg/l	NA	0.05 U	NA	0.004	NA	0.003	NA	0.05 UJ
Total Kjeldahl Nitrogen-N	mg/l	NA	NA	NA	NA	NA	NA	NA	0.2 UJ
Temperature	C	NA	NA	NA	NA	NA	27.1	NA	NA
Turbidity	NTU	NA	NA	NA	0.3	NA	0.2	NA	0.1
pH	su	NA	NA	NA	NA	NA	7.1	NA	6.2

TABLE 3-4
VIEQUES WATER QUALITY STUDY
FIELD BLANK ANALYTICAL RESULTS
NAVY CLEAN CTO-0395

Sample Designation FB-10/13/99		Battelle		Columbia		Caribtec		Savannah	
Analyte	Units	Dissolved	Total	Dissolved	Total	Dissolved	Total	Dissolved	Total
Arsenic, ICP	ug/l	NA	NA	NA	NA	1 U	1 U	5 U	5 U
Arsenic, GFAA	ug/l	NA	NA	NA	NA	1 U	1 U	10 UR	10 UR
Barium, ICP	ug/l	NA	NA	NA	NA	10 UJ	10 UJ	40 U	40 U
Barium, GFAA	ug/l	NA	NA	NA	NA	10 UJ	10 UJ	NA	NA
Boron, ICP	ug/l	NA	NA	NA	NA	100 U	100 U	240 U	5.1 B
Cadmium, ICP	ug/l	NA	NA	NA	NA	30	40	5 U	5 U
Chromium, ICP	ug/l	NA	NA	NA	NA	1 UJ	1 UJ	15 U	15 U
Chromium, GFAA	ug/l	NA	NA	NA	NA	1 UJ	1 UJ	NA	NA
Copper, ICP	ug/l	NA	NA	NA	NA	30	20	2.9 U	2.9 U
Copper, GFAA	ug/l	NA	NA	NA	NA	30	20	1.5 J	0.7 J
Chromium VI, ICP-MS/ICP-MS/GFAA/ICP	ug/l	NA	NA	NA	NA	0.001 U	0.001 U	0.007 U	0.007 U
Iron, ICP	ug/l	NA	NA	NA	NA	70	160	200 U	200 U
Lead, ICP	ug/l	NA	NA	NA	NA	10 UJ	10 UJ	8.5 U	8.5 U
Lead, GFAA	ug/l	NA	NA	NA	NA	10 UJ	10 UJ	NA	NA
Manganese, ICP	ug/l	NA	NA	NA	NA	1 UJ	3 J	5 U	5 U
Manganese, GFAA	ug/l	NA	NA	NA	NA	1 UJ	3 J	NA	NA
Mercury	ug/l	NA	NA	NA	NA	0.1 U	0.1 U	0.2 U	0.2 U
Selenium, ICP	ug/l	NA	NA	NA	NA	1 U	1 U	10 U	10 U
Silver, ICP	ug/l	NA	NA	NA	NA	1 U	1 U	2 U	2 U
Silver, GFAA	ug/l	NA	NA	NA	NA	1 U	1 U	0.3 J	0.48 J
Zinc, ICP	ug/l	NA	NA	NA	NA	1 U	1 U	3.7 B	23 B
Ammonia as Nitrogen	mg/l	NA	NA	NA	NA	NA	0.1 U	NA	0.03 U
Color	PCU	NA	NA	NA	NA	NA	5	NA	5 U
Cyanide	mg/l	NA	NA	NA	NA	NA	0.005 U	NA	0.01 U
Fluoride	mg/l	NA	NA	NA	NA	NA	0.1 U	NA	0.1 U
Nitrate + Nitrite-N	mg/l	NA	NA	NA	NA	NA	0.01 U	NA	0.05 U
Oil & Grease	mg/l	NA	NA	NA	NA	NA	5 U	NA	2.8 J
Oxygen	mg/l	NA	NA	NA	NA	NA	7.97	NA	NA
Phenolics Recoverable	mg/l	NA	NA	NA	NA	NA	0.001 U	NA	0.03 U
Sulfide	mg/l	NA	NA	NA	NA	NA	0.003	NA	0.05 U
Total Kjeldahl Nitrogen-N	mg/l	NA	NA	NA	NA	NA	NA	NA	0.2 U
Temperature	C	NA	NA	NA	NA	NA	27.2	NA	NA
Turbidity	NTU	NA	NA	NA	NA	NA	0.2	NA	0.1
pH	su	NA	NA	NA	NA	NA	7.1	NA	6

No field Blanks were obtained for the Trace Metal analysis due to the lack of contaminate-free water.

TABLE 3-4
VIEQUES WATER QUALITY STUDY
FIELD BLANK ANALYTICAL RESULTS
NAVY CLEAN CTO-0395

Sample Designation FB-10/14/99		Battelle		Columbia		Caribtec		Savannah	
Analyte	Units	Dissolved	Total	Dissolved	Total	Dissolved	Total	Dissolved	Total
Arsenic, ICP	ug/l	0.1846	0.7393	0.5 U	0.5 U	1 U	1 U	5 U	5 U
Arsenic, GFAA	ug/l	NA	NA	NA	NA	1 U	1 U	10 UR	10 UR
Barium, ICP	ug/l	0.00564 U	0.00564 U	5 U	5 U	10 UJ	10 UJ	40 U	40 U
Barium, GFAA	ug/l	NA	NA	NA	NA	10 UJ	10 UJ	NA	NA
Boron, ICP	ug/l	11.43	42.79	50 U	50 U	100 U	100 U	26 B	32 B
Cadmium, ICP	ug/l	0.015 U	0.2905	0.02 U	0.03	50	40	5 U	5 U
Chromium, ICP	ug/l	0.8379	3.112	10 U	10 U	1 UJ	1 UJ	15 U	15 U
Chromium, GFAA	ug/l	NA	NA	NA	NA	1 UJ	1 UJ	NA	NA
Chromium VI, ICP-MS/ICP-MS/GFAA/ICP	ug/l	0.00065 U	0.00065 U	NA	0.05 R	0.001 U	0.001 U	0.007 U	0.007 U
Copper, ICP	ug/l	0.03408	0.0925	0.2	0.2 U	40	30	2.9 U	1.6 B
Copper, GFAA	ug/l	NA	NA	NA	NA	40	30	1.1 J	1.3 J
Iron, ICP	ug/l	4.406	47.39	20 U	20 U	10	40	200 U	200 U
Lead, ICP	ug/l	0.01795	0.1218	0.02 U	0.03 J	10 UJ	10 UJ	8.5 U	8.5 U
Lead, GFAA	ug/l	NA	NA	NA	NA	10 UJ	10 UJ	NA	NA
Manganese, ICP	ug/l	0.01 U	0.06007	5 U	5 U	1 UJ	1 UJ	5 U	5 U
Manganese, GFAA	ug/l	NA	NA	NA	NA	1 UJ	1 UJ	NA	NA
Mercury	ug/l	0.00025	0.00065	5 U	5 U	0.1 U	0.1	0.2 U	0.2 U
Selenium, ICP	ug/l	0.394 U	0.394 U	1 U	1 U	1 U	1 U	10 U	10 U
Silver, ICP	ug/l	0.00429 U	0.04362	0.1 U	0.1 U	1 U	1 U	2 U	2 U
Silver, GFAA	ug/l	NA	NA	NA	NA	1 U	1 U	2 UJ	2 UJ
Zinc, ICP	ug/l	0.3129 J	5.646 J	10 U	10 U	1 U	1 U	5.7 B	50 U
Ammonia as Nitrogen	mg/l	NA	0.01 U	NA	0.05 U	NA	0.1 U	NA	0.059
Color	PCU	NA	5 U	NA	5 U	NA	5 U	NA	5 U
Cyanide	mg/l	NA	0.005 U	NA	0.001 U	NA	0.005 U	NA	0.01 U
Fluoride	mg/l	NA	0.1 U	NA	0.2 U	NA	0.12	NA	5 U
Nitrate + Nitrite-N	mg/l	NA	0.01 U	NA	0.2 U	NA	0.01 U	NA	0.05 U
Oil & Grease	mg/l	NA	1 U	NA	5 U	NA	5 U	NA	5 U
pH	su	NA	NA	NA	NA	NA	7.1	NA	7.4
Oxygen	mg/l	NA	NA	NA	NA	NA	7.84	NA	NA
Phenolics Recoverable	mg/l	NA	0.04 U	NA	0.01 U	NA	0.001 U	NA	0.03 U
Sulfide	mg/l	NA	NA	NA	0.002	NA	0.003 U	NA	0.05 U
Temperature	C	NA	NA	NA	NA	NA	27.7	NA	NA
Total Kjeldahl Nitrogen-N	mg/l	NA	NA	NA	NA	NA	NA	NA	0.2 U
Turbidity	NTU	NA	NA	NA	0.1 U	NA	0.2	NA	0.24

TABLE 3-4
VIEQUES WATER QUALITY STUDY
FIELD BLANK ANALYTICAL RESULTS
NAVY CLEAN CTO-0395

Sample Designation FB-10/15/99		Battelle		Columbia		Caribtec		Savannah	
Analyte	Units	Dissolved	Total	Dissolved	Total	Dissolved	Total	Dissolved	Total
Arsenic, ICP	ug/l	0.1191	0.1798	0.5 U	0.5 U	1 UJ	1 UJ	5 U	5 U
Arsenic, GFAA	ug/l	NA	NA	NA		NA	NA	10 UR	10 UR
Barium, ICP	ug/l	0.04952	0.00812	5 U	5 U	10 UJ	10 UJ	40 U	40 U
Boron, ICP	ug/l	0.191 U	0.9642	50 U	50 U	100 UJ	100 UJ	240 U	11 B
Cadmium, ICP	ug/l	0.015 U	0.015 U	0.02 U	0.02 U	30 J	30 J	5 U	5 U
Chromium, ICP	ug/l	0.042 U	0.09613	10 U	10 U	1 UJ	1 UJ	15 U	15 U
Copper, ICP	ug/l	0.0135 U	0.03236	0.2 U	0.2 U	10 J	20 J	2.9 U	2.1 B
Copper, GFAA	ug/l	NA	NA	NA	NA	NA	NA	1.2 J	1.2 J
Chromium VI, ICP-MS/ICP-MS/GFAA/ICP	ug/l	0.00065 U	0.00065 U	NA	0.05 R	0.001 UJ	0.001 UJ	0.007 U	0.007 U
Iron, ICP	ug/l	5.27	4.286	20 U	20 U	150 UJ	20 UJ	200 U	200 U
Lead, ICP	ug/l	0.0049 U	0.0049 U	0.06	0.09	10 UJ	10 UJ	8.5 U	8.5 U
Manganese, ICP	ug/l	0.03352	0.0154	5 U	5 U	1 UJ	1 UJ	5 U	5 U
Mercury	ug/l	0.00113	0.00123	5 U	5 U	0.1 UJ	0.5 J	0.2 U	0.2 U
Selenium, ICP	ug/l	0.394 U	0.394 U	1 U	1 U	1 UJ	1 UJ	10 U	10 U
Silver, ICP	ug/l	0.00429 U	0.0659	0.1 U	0.1 U	1 UJ	1 UJ	2 U	2 U
Silver, GFAA	ug/l	NA	NA	NA	NA	NA	NA	2 UJ	2 UJ
Zinc, ICP	ug/l	0.0352 UJ	0.0352 UJ	10 U	10 U	NA	NA	3.1 B	3.5 B
Ammonia as Nitrogen	mg/l	NA	0.01 U	NA	0.05 U	NA	0.1 UJ	NA	0.02 B
Color	PCU	NA	5 U	NA	5 U	NA	5 J	NA	5 U
Cyanide	mg/l	NA	0.005 U	NA	0.001 U	NA	0.005 UJ	NA	0.01 U
Fluoride	mg/l	NA	0.1 U	NA	0.2 U	NA	0.1 UJ	NA	5 U
Nitrate + Nitrite-N	mg/l	NA	0.01 U	NA	0.2 U	NA	0.01 UJ	NA	0.05 U
Oil & Grease	mg/l	NA	1.2 UJ	NA	5 U	NA	5 UJ	NA	1.7 J
Oxygen	mg/l	NA	NA	NA	NA	NA	7.95 J	NA	NA
Phenolics Recoverable	mg/l	NA	0.04 U	NA	0.02	NA	0.001 UJ	NA	0.03 UR
Sulfide (Modified)	mg/l	NA	0.0019 J	NA	NA	NA	NA	NA	NA
Sulfide	mg/l	NA	NA	NA	0.002 U	NA	0.003 UJ	NA	0.05 U
Total Kjeldahl Nitrogen-N	mg/l	NA	NA	NA	NA	NA	26.9 J	NA	0.2 U
Turbidity	NTU	NA	NA	NA	0.1 U	NA	0.2 J	NA	0.1
pH	su	NA	NA	NA	NA	NA	7 J	NA	5.9

TABLE 3-4
VIEQUES WATER QUALITY STUDY
FIELD BLANK ANALYTICAL RESULTS
NAVY CLEAN CTO-0395

Sample Designation FB-10/16/99		Battelle		Columbia		Caribtec		Savannah	
Analyte	Units	Dissolved	Total	Dissolved	Total	Dissolved	Total	Dissolved	Total
Arsenic, ICP	ug/l	0.1133	0.275	0.5 U	0.5 U	1 U	1 U	5 U	5 U
Arsenic, GFAA	ug/l	NA	NA	NA	NA	1 U	1 U	10 UR	10 UR
Barium, ICP	ug/l	0.00564 U	0.00829	5 U	5 U	10 UJ	10 UJ	40 U	40 U
Barium, GFAA	ug/l	NA	NA	NA	NA	10 UJ	10 UJ	NA	NA
Boron, ICP	ug/l	10.36	15.87	50 U	50 U	100 U	100 U	240 U	8 B
Cadmium, ICP	ug/l	0.015 U	0.015 U	0.02 U	0.02 U	30	27	5 U	5 U
Chromium, ICP	ug/l	0.8581	1.893	10 U	10 U	1 UJ	1 UJ	15 U	15 U
Chromium, GFAA	ug/l	NA	NA	NA	NA	1 UJ	1 UJ	NA	NA
Copper, ICP	ug/l	0.1985	0.08495	0.2 U	0.2 U	100	100	2.9 U	2.9 U
Copper, GFAA	ug/l	NA	NA	NA	NA	100	100	1.4 J	1 J
Chromium VI, ICP-MS/ICP-MS/GFAA/ICP	ug/l	0.00065 U	0.00065 U	NA	0.05 R	0.001 U	0.001 U	0.007 U	0.007 U
Iron, ICP	ug/l	6.444	6.321	20 U	20 U	130	30	200 U	200 U
Lead, ICP	ug/l	0.01647	0.02109	0.02 U	0.02	10 UJ	10 UJ	8.5 U	8.5 U
Lead, GFAA	ug/l	NA	NA	NA	NA	10 UJ	10 UJ	NA	NA
Manganese, ICP	ug/l	0.03888	0.02698	5 U	5 U	1 UJ	4 J	5 U	5 U
Manganese, GFAA	ug/l	NA	NA	NA	NA	1 UJ	4 J	NA	NA
Mercury	ug/l	0.00062	0.00058	5 U	5 U	0.1 U	0.3	0.2 U	0.2 U
Selenium, ICP	ug/l	0.5767	0.9331	1 U	1 U	1 U	1 U	10 U	10 U
Silver, ICP	ug/l	0.00965	0.02446	0.1 U	0.1 U	1 U	1 U	0.55 B	2 U
Silver, GFAA	ug/l	NA	NA	NA	NA	1 U	1 U	2 UJ	2 UJ
Zinc, ICP	ug/l	0.318 J	0.4581 J	10 U	10 U	16	30	2.7 B	95
Ammonia as Nitrogen	mg/l	NA	0.01	NA	0.05 U	NA	0.1 U	NA	0.08
Color	PCU	NA	5 U	NA	5 U	NA	5 U	NA	5 U
Cyanide	mg/l	NA	0.005 U	NA	0.001 U	NA	0.005 U	NA	0.01 U
Fluoride	mg/l	NA	0.1 U	NA	0.2 U	NA	0.296	NA	5 U
Nitrate + Nitrite-N	mg/l	NA	0.01 U	NA	0.2 U	NA	0.01 U	NA	0.05 U
Oil & Grease	mg/l	NA	1 UJ	NA	5 U	NA	5 U	NA	1.9 J
Oxygen	mg/l	NA	NA	NA	NA	NA	8	NA	NA
Phenolics Recoverable	mg/l	NA	0.04 U	NA	0.01 U	NA	0.001 U	NA	0.03 UR
Sulfide (Modified)	mg/l	NA	0.00223 J	NA	NA	NA	NA	NA	NA
Sulfide	mg/l	NA	NA	NA	0.002 U	NA	0.003 U	NA	0.05 U
Total Kjeldahl Nitrogen-N	mg/l	NA	NA	NA	NA	NA	NA	NA	0.2 U
Temperature	C	NA	NA	NA	NA	NA	27.1	NA	NA
Turbidity	NTU	NA	NA	NA	0.1	NA	0.2	NA	0.1
pH	su	NA	NA	NA	NA	NA	7.1	NA	6.3

TABLE 3-4
VIEQUES WATER QUALITY STUDY
FIELD BLANK ANALYTICAL RESULTS
NAVY CLEAN CTO-0395

Sample Designation FB-10/17/99		Battelle		Columbia		Caribtec		Savannah	
Analyte	Units	Dissolved	Total	Dissolved	Total	Dissolved	Total	Dissolved	Total
Arsenic, ICP	ug/l	NA	NA	0.5 U	0.5 U	1 U	1 U	5 U	5 U
Arsenic, GFAA	ug/l	NA	NA	NA	NA	1 U	1 U	10 UR	10 UR
Barium, ICP	ug/l	NA	NA	5 U	5 U	10 UJ	10 UJ	40 U	40 U
Barium, GFAA	ug/l	NA	NA	NA	NA	10 UJ	10 UJ	NA	NA
Boron, ICP	ug/l	NA	NA	50 U	50 U	100 U	100 U	240 U	6 B
Cadmium, ICP	ug/l	NA	NA	0.02 U	0.02 U	40	40	5 U	5 U
Chromium, ICP	ug/l	NA	NA	10 U	10 U	1 UJ	1 UJ	15 U	15 U
Chromium, GFAA	ug/l	NA	NA	NA	NA	1 UJ	1 UJ	NA	NA
Copper, ICP	ug/l	NA	NA	0.3	0.2 U	120	130	2.9 U	2.9 U
Copper, GFAA	ug/l	NA	NA	NA	NA	120	130	2 UJ	2 UJ
Chromium VI, ICP-MS/ICP-MS/GFAA/ICP	ug/l	NA	NA	NA	0.05 R	0.001 U	0.001 U	0.007 U	NA
Iron, ICP	ug/l	NA	NA	20 U	20 U	110	47	200 U	200 U
Lead, ICP	ug/l	NA	NA	0.13	0.25	10 UJ	10 UJ	8.5 U	8.5 U
Lead, GFAA	ug/l	NA	NA	NA	NA	10 UJ	10 UJ	NA	NA
Manganese, ICP	ug/l	NA	NA	5 U	5 U	1 UJ	1 UJ	5 U	5 U
Manganese, GFAA	ug/l	NA	NA	NA	NA	1 UJ	1 UJ	NA	NA
Mercury	ug/l	NA	NA	5 U	5 U	0.3 U	0.8	0.2 U	0.2 U
Selenium, ICP	ug/l	NA	NA	1 U	1 U	1 U	1 U	10 U	10 U
Silver, ICP	ug/l	NA	NA	0.1 U	0.1	1 U	1 U	2 U	2 U
Silver, GFAA	ug/l	NA	NA	NA	NA	1 U	1 U	2 UJ	2 UJ
Zinc, ICP	ug/l	NA	NA	10 U	10 U	10 U	10	4.7 B	2.5 B
Ammonia as Nitrogen	mg/l	NA	0.01	NA	0.05 U	NA	0.1 U	NA	0.021 B
Color	PCU	NA	NA	NA	NA	NA	5 U	NA	5 U
Cyanide	mg/l	NA	NA	NA	0.01 U	NA	0.005 U	NA	0.01 U
Fluoride	mg/l	NA	NA	NA	NA	NA	0.166	NA	5 U
Nitrate + Nitrite-N	mg/l	NA	0.01 U	NA	0.2 U	NA	0.01 U	NA	0.05 U
Oil & Grease	mg/l	NA	NA	NA	5 U	NA	5 U	NA	2.5 J
Oxygen	mg/l	NA	NA	NA	NA	NA	7.89	NA	NA
Phenolics Recoverable	mg/l	NA	0.04 U	NA	0.01 U	NA	0.001 U	NA	0.03 UR
Sulfide (Modified)	mg/l	NA	0.00232 J	NA	NA	NA	NA	NA	NA
Sulfide	mg/l	NA	NA	NA	0.002 U	NA	0.003 U	NA	0.05 U
Total Kjeldahl Nitrogen-N	mg/l	NA	NA	NA	NA	NA	NA	NA	0.2 U
Temperature	C	NA	NA	NA	NA	NA	27.3	NA	NA
Turbidity	NTU	NA	NA	NA	NA	NA	0.2	NA	0.1
pH	su	NA	NA	NA	NA	NA	7.2	NA	6.5

The cooler containing Battelle's samples was lost during shipment.

TABLE 3-4
VIEQUES WATER QUALITY STUDY
FIELD BLANK ANALYTICAL RESULTS
NAVY CLEAN CTO-0395

Sample Designation FIELD REAGENT BLK		Battelle		Columbia		Caribtec		Savannah	
Analyte	Units	Dissolved	Total	Dissolved	Total	Dissolved	Total	Dissolved	Total
Arsenic, ICP-MS/ICP-MS/GFAA/ICP	ug/l	0.0436 U	NA	NA	NA	NA	NA	NA	NA
Barium, ICP	ug/l	0.00564 U	NA	NA	NA	NA	NA	NA	NA
Boron, ICP	ug/l	1.08	NA	NA	NA	NA	NA	NA	NA
Cadmium, ICP	ug/l	0.015 U	NA	NA	NA	NA	NA	NA	NA
Chromium, ICP	ug/l	0.1871	NA	NA	NA	NA	NA	NA	NA
Copper, ICP	ug/l	0.02113	NA	NA	NA	NA	NA	NA	NA
Iron, ICP	ug/l	6.33	NA	NA	NA	NA	NA	NA	NA
Lead, ICP	ug/l	0.06683	NA	NA	NA	NA	NA	NA	NA
Manganese, ICP	ug/l	0.394 U	NA	NA	NA	NA	NA	NA	NA
Mercury	ug/l	0.00056	NA	NA	NA	NA	NA	NA	NA
Selenium, ICP	ug/l	0.394 U	NA	NA	NA	NA	NA	NA	NA
Silver, ICP	ug/l	0.254 U	NA	NA	NA	NA	NA	NA	NA
Zinc, ICP	ug/l	0.1082 J	NA	NA	NA	NA	NA	NA	NA

TABLE 3-4
VIEQUES WATER QUALITY STUDY
FIELD BLANK ANALYTICAL RESULTS
NAVY CLEAN CTO-0395

Sample Designation BOLE BLANK-A		Battelle		Columbia		Caribtec		Savannah	
Analyte	Units	Dissolved	Total	Dissolved	Total	Dissolved	Total	Dissolved	Total
Arsenic, ICP-MS	ug/l	NA	0.101	NA	NA	NA	NA	NA	NA

TABLE 3-4
VIEQUES WATER QUALITY STUDY
FIELD BLANK ANALYTICAL RESULTS
NAVY CLEAN CTO-0395

Sample Designation BOLE BLANK-B		Battelle		Columbia		Caribtec		Savannah	
Analyte	Units	Dissolved	Total	Dissolved	Total	Dissolved	Total	Dissolved	Total
Arsenic, ICP-MS	ug/l	NA	0.1642	NA	NA	NA	NA	NA	NA

TABLE 3-4
VIEQUES WATER QUALITY STUDY
FIELD BLANK ANALYTICAL RESULTS
NAVY CLEAN CTO-0395

Sample Designation BOTTLE BLANK-A		Battelle, ICP		Columbia		Caribtec		Savannah	
Analyte	Units	Dissolved	Total	Dissolved	Total	Dissolved	Total	Dissolved	Total
Barium	ug/l	NA	0.00564 U	NA	NA	NA	NA	NA	NA
Boron	ug/l	NA	0.9882	NA	NA	NA	NA	NA	NA
Cadmium	ug/l	NA	0.015 U	NA	NA	NA	NA	NA	NA
Chromium	ug/l	NA	0.08287	NA	NA	NA	NA	NA	NA
Copper	ug/l	NA	0.01697	NA	NA	NA	NA	NA	NA
Iron	ug/l	NA	2.772	NA	NA	NA	NA	NA	NA
Lead	ug/l	NA	0.0049 U	NA	NA	NA	NA	NA	NA
Manganese	ug/l	NA	0.01 U	NA	NA	NA	NA	NA	NA
Mercury	ug/l	NA	0.00044	NA	NA	NA	NA	NA	NA
Selenium	ug/l	NA	0.394 U	NA	NA	NA	NA	NA	NA
Silver	ug/l	NA	0.01802	NA	NA	NA	NA	NA	NA
Zinc	ug/l	NA	0.0352 UJ	NA	NA	NA	NA	NA	NA

TABLE 3-4
VIEQUES WATER QUALITY STUDY
FIELD BLANK ANALYTICAL RESULTS
NAVY CLEAN CTO-0395

Sample Designation BOTTLE BLANK-B		Battelle, ICP		Columbia		Caribtec		Savannah	
Analyte	Units	Dissolved	Total	Dissolved	Total	Dissolved	Total	Dissolved	Total
Barium	ug/l	NA	0.04129	NA	NA	NA	NA	NA	NA
Boron	ug/l	NA	0.5097	NA	NA	NA	NA	NA	NA
Cadmium	ug/l	NA	0.015 U	NA	NA	NA	NA	NA	NA
Chromium	ug/l	NA	0.0474	NA	NA	NA	NA	NA	NA
Copper	ug/l	NA	0.02105	NA	NA	NA	NA	NA	NA
Iron	ug/l	NA	2.252	NA	NA	NA	NA	NA	NA
Lead	ug/l	NA	0.0049 U	NA	NA	NA	NA	NA	NA
Manganese	ug/l	NA	0.01 U	NA	NA	NA	NA	NA	NA
Mercury	ug/l	NA	0.00046	NA	NA	NA	NA	NA	NA
Selenium	ug/l	NA	0.394 U	NA	NA	NA	NA	NA	NA
Silver	ug/l	NA	0.01114	NA	NA	NA	NA	NA	NA
Zinc	ug/l	NA	0.0352 UJ	NA	NA	NA	NA	NA	NA

TABLE 3-5
FIELD BLANK AND ASSOCIATED SAMPLING LOCATIONS
VIEQUES WATER QUALITY STUDY
NAVY CLEAN CTO-0395

FIELD BLANK	DATE	SAMPLING SITES											
FB-10/11/99	10/11/99	BKGND-04	SP-01	SP-02	BKGND-04								
FB-10/12/99	10/12/99	RW-03	SP-03										
FB-10/13/99	10/13/99	BKGND-01	RW-01	RW-01 Dup	RW-02	RW-02 Dup							
FB-10/14/99	10/14/99	RW-04	RW-05	RW-09	RW-09	RW-10							
FB-10/14/99 Dup	10/14/99												
FB-10/15/99	10/15/99	BKGND-02	BKGND-03	RW-06	RW-07	RW-07 Dup	RW-08	SP-08	SP-09	SP-10	SP-10 Dup	SP-11	SP-12
FB-10/15/99 Dup	10/15/99												
FB-10/16/99	10/16/99	SP-08	SP-09	SP-10	SP-10 Dup	SP-11							
FB-10/17/99	10/17/99	BKGND-03	SP-12	RW-04									

TABLE 3-6
PERFORMANCE EVALUATION SAMPLES
SUMMARY OF ANALYTICAL DATA
VIEQUES WATER QUALITY STUDY
NAVY CLEAN CTO-0395

Sample Designation NRCINMS		Spiked Concentration	Battelle ICP-MS	Columbia ICP-MS	Caribtec Furnace	Savannah ICP
Analyte	Units					
Arsenic, ICP	ug/l	1.11	1.398	1.36	4 J	100 U
Arsenic, Furnace	ug/l	--	NA	NA	NA	100 UR
Barium	ug/l	--	7.493	16	45 J	800 U
Boron	ug/l	--	4036	3940	100 UJ	3900 J
Cadmium	ug/l	0.026	0.02373	0.028	23 J	100 U
Chromium	ug/l	0.144	0.2631	10 U	18 J	300 U
Chromium VI	ug/l	--	NA	NA	0.001 UJ	NA
Copper, ICP	ug/l	0.592	0.5709	0.57	79 J	58 U
Copper, Furnace	ug/l	--	NA	NA	NA	2 U
Iron	ug/l	0.713	23.5 U	20 U	20 J	4000 U
Lead	ug/l	0.0098	0.01512	0.1	7 J	170 U
Manganese	ug/l	2.78	3.041	5 U	28 J	100 U
Mercury	ug/l	--	0.0839	110	0.1 UJ	0.2 U
Selenium	ug/l	--	0.694 U	1 U	1 UJ	84 B
Silver, ICP	ug/l	--	0.254 U	0.2	21 J	40 U
Silver, Furnace	ug/l	--	NA	NA	NA	10 UJ
Zinc	ug/l	0.381	0.5837 J	10 U	1 UJ	58 B

TABLE 3-7
METHOD DETECTON LIMIT STUDY
VIEQUES WATER QUALITY STUDY
NAVY CLEAN CTO-0395

LAB		SAVANNAH							
SAMPLE ID SAMPLE DATE	Water Quality Criteria	REPLICATE 1 10/17/99	REPLICATE 2 10/17/99	REPLICATE 3 10/17/99	REPLICATE 4 10/17/99	REPLICATE 5 10/17/99	REPLICATE 6 10/17/99	REPLICATE 7 10/17/99	Calculated MDL
Metals (ug/l)									
Arsenic ICP	1.4	190.96	202.33	148.36	167.8	243.84	205.97	187.91	95.12
Barium ICP	1,000	36.614	34.166	33.1	31.97	33.561	35.712	24.281	12.76
Boron ICP	NE	5329.9	5171.3	4962.3	4945.6	4991.8	4936	4913.4	489.14
Cadmium ICP	5	44.309	45.966	47.403	48.207	46.768	50.403	42.476	8.14
Chromium ICP	300	105.41	102.21	95.896	100.02	105.98	104.7	88.873	19.5
Copper ICP	2.4*	131.38	116.08	109.64	104.42	90.58	99.415	114.34	41.2
Copper Furnace	50	12.4	11.4	12	15.4	11.4	11.6	11.4	--
Chromium VI (mg/l) ICP	NE	0.0092	0.0088	0.0089	0.0084	0.0087	0.0083	0.0085	0.0091
Iron ICP	8.1*	1488.3	1514.2	1492.6	2164.2	1782.9	1930	842.43	859.4
Lead ICP	15	103.15	87.943	72.54	83.457	106.4	104.75	103.32	41.5
Manganese ICP	100	93.632	104.17	88.588	92.325	88.496	103.27	90.021	20.97
Mercury ICP	0.025	0.172	0.201	0.19	0.2	0.199	0.197	0.206	0.035
Selenium ICP	10	243.97	196.79	252.48	246.9	244.27	252.43	202.48	75.14
Silver ICP	2	57.632	43.169	51.251	54.112	60.916	66.355	30.685	37.5
Zinc ICP	50	122.63	180.72	136.24	115.86	117.32	153.23	129.16	73.44

* Dissolved Criteria
NA - Not Analyzed
NE - Not Established

TABLE 3-7
METHOD DETECTON LIMIT STUDY
VIEQUES WATER QUALITY STUDY
NAVY CLEAN CTO-0395

LAB		BATTELLE											
SAMPLE ID	Water Quality	Blank 01	Blank 02	Blank 03	Blank 04	Blank 05	Blank 06	Blank 07	Blank 08	Blank 09	Blank 10	Blank 11	
SAMPLE DATE	Criteria	10/15/99	10/15/99	10/15/99	10/15/99	10/15/99	10/15/99	10/15/99	10/15/99	10/15/99	10/15/99	10/15/99	MDL**
Metals (ug/l)													
Arsenic ICP	1.4	0.0436 U	0.0436 U	0.0436 U	0.0436 U	0.3844	0.123 U	0.123 U	0.123 U	0.123 U	0.123 U	0.123 U	0.123
Barium ICP	1,000	0.00564 U	0.00564 U	0.00564 U	0.00564 U	0.00564 U	NA	NA	NA	NA	NA	NA	0.00564
Boron ICP	NE	2.582	1.336	3.253	2.393	2.878	NA	NA	NA	NA	NA	NA	1.00
Cadmium ICP	5	0.015 U	0.015 U	0.015 U	0.015 U	0.015 U	0.00299 U	0.00299 U	0.00299 U	0.00299 U	0.00299 U	0.00299 U	0.00299
Chromium ICP	300	0.254	0.2675	0.1427	0.168	0.2029	0.0627 U	0.07705	0.09648	0.07031	0.0627 U	0.07703	0.0627
Copper ICP	2.4*	0.0369	0.02216	0.0135 U	0.0135 U	0.01539	0.01838	0.02915	0.04091	0.03291	0.01834	0.03661	0.0135
Copper Furnace	50	NA	NA	NA	NA	NA	NA	NA	NA	NA	NA	NA	--
Chromium VI (mg/l) ICP	NE	0.65 U	NA	NA	NA	NA	NA	NA	NA	NA	NA	NA	0.65
Iron ICP	8.1*	34.4	35.5	1.36 U	1.36 U	1.36 U	NA	NA	NA	NA	NA	NA	1.36
Lead ICP	15	0.03377	0.02298	0.0049 U	0.0049 U	0.0049 U	0.00766	0.00205	0.01126	0.00256	0.00196 U	0.00263	0.00196
Manganese ICP	100	0.04109	0.03774	0.01 U	0.01 U	0.01 U	NA	NA	NA	NA	NA	NA	0.01
Mercury ICP	0.025	0.00023	0.00018	0.00017 U	0.00017 U	0.00115	NA	NA	NA	NA	NA	NA	0.00017
Selenium ICP	10	0.394 U	0.394 U	0.394 U	0.394 U	0.394 U	0.694 U	0.694 U	0.694 U	0.694 U	0.694 U	0.694 U	0.394
Silver ICP	2	0.00429 U	0.00429 U	0.00581	0.00741	0.00429 U	NA	NA	NA	NA	NA	NA	0.00429
Zinc ICP	50	0.0352 U	0.0352 U	0.0352 U	0.0352 U	0.0352 U	NA	NA	NA	NA	NA	NA	0.0352

* Dissolved Criteria
NA - Not Analyzed
NE - Not Established
** - MDL deduced from Blank results and historical DL studies

TABLE 3-8
BAHIA SALINA DEL SUR
BATTELLE TOTAL CONSTITUENTS
VIEQUES WATER QUALITY STUDY
NAVY CLEAN CTO-395

SAMPLE ID LABORATORY	Water Quality Criteria	BKGND-02 BATTELLE	RW-06 BATTELLE	RW-07 BATTELLE	RW-08 BATTELLE
Metals (ug/l)					
Arsenic, ICP-MS	1.4	1.385	1.11	1.598	1.617
Barium, ICP-MS	1000	7.728	7.633	7.661	7.633
Boron, ICP-MS	NE	3840	3794	3850	3767
Cadmium, ICP-MS	5	0.00335	0.0114	0.00603	0.00303
Chromium, ICP-MS	300	0.2763	0.2769	0.2973	0.2874
Chromium VI , ICP-MS	NE	0.00782 U	0.00782 U	0.00782 U	0.00782 U
Copper, ICP-MS	NE	0.1755	0.1883	0.4057	0.1995
Iron, ICP-MS	NE	23.5 U	23.5 U	23.5 U	23.5 U
Lead, ICP-MS	NE	0.0098	0.01236	0.01674	0.01255
Manganese, ICP-MS	100	0.8385	0.6733	0.7601	0.6516
Mercury, ICP-MS	0.025	0.00145	0.00063	0.00048	0.00105
Selenium, ICP-MS	10	0.694 U	0.694 U	0.694 U	0.694 U
Silver, ICP-MS	2	0.3281	0.3519	0.4211	0.5628
Zinc, ICP-MS	50	0.342 UJ	0.342 UJ	0.342 UJ	0.342 UJ
Conventional (mg/l)					
Ammonia as Nitrogen	NE	0.015	0.011	0.013	0.013
Sulfide (Modified)	0.002	0.00115 J	0.00166 J	0.00229 J	0.00278 J
Cyanide	0.001	0.005 U	0.005 U	0.005 U	0.005 U
Fluoride	1.3	0.6	0.65	0.68	0.65
Nitrate + Nitrite-N	NE	0.01 U	0.01 U	0.01 U	0.01 U
Oil & Grease	NE	1.1 UJ	1.1 UJ	1.1 UJ	1.1 UJ
Phenolics Recoverable	0.01	0.04 U	0.04 U	0.04 U	0.04 U
Color (pcu)	NE	5 U	5 U	5 U	5 U
Field Measurements					
pH	7.3-8.5	8.19	8.14	8.24	8.04
Dissolved Oxygen	> 4	8.13	5.3	6.86	8.02
Turbidity (NTU)	10	3	3	2	3
Temperature	32	29	29.6	31.1	29.7

NA - Not Analyzed
NE - Not Established
Detection Limit Exceeds WQC
Exceeds WQC

The Field Measurements were performed by the Sampling Personnel at the time of sample collection. Battelle did not perform this analysis.

TABLE 3-9
BAHIA SALINA DEL SUR
BATTELLE DISSOLVED CONSTITUENTS
VIEQUES WATER QUALITY STUDY
NAVY CLEAN CTO-0395

SAMPLE ID LABORATORY	Water Quality Criteria	BKGND-02 BATTELLE	RW-06 BATTELLE	RW-07 BATTELLE	RW-08 BATTELLE
Metals (ug/l)					
Arsenic, ICP-MS	NE	1.228	1.29	1.182	1.018
Barium, ICP-MS	NE	7.32	7.696	7.312	7.478
Boron, ICP-MS	NE	3744	3926	3746	3836
Cadmium, ICP-MS	NE	0.00516	0.00326	0.00717	0.01163
Chromium, ICP-MS	NE	0.2586	0.2551	0.2532	0.2873
Chromium VI , ICP-MS	NE	0.00782 U	0.00782 U	0.00782 U	0.00782 U
Copper, ICP-MS	2.4	0.1645	0.1612	0.3838	0.1659
Iron, ICP-MS	NE	23.5 U	23.5 U	23.5 U	23.5 U
Lead, ICP-MS	8.1	0.00843	0.00793	0.01006	0.0097
Manganese, ICP-MS	NE	0.7106	0.726	0.7415	0.579
Mercury, ICP-MS	NE	0.00098	0.00077	0.00043	0.00068
Selenium, ICP-MS	NE	0.694 U	0.694 U	0.694 U	0.694 U
Silver, ICP-MS	NE	0.254 U	0.275	0.3575	0.5777
Zinc, ICP-MS	NE	0.342 UJ	0.342 UJ	0.342 UJ	0.342 UJ

NE = Not Established

Detection Limit Exceeds WQC

Exceeds WQC

TABLE 3-10
BAHIA SALINA DEL SUR - DATA STATISTICS
BATTELLE, TOTAL CONSTITUENTS
VIEQUES WATER QUALITY STUDY
CTO-0395

	Water Quality Criteria	Minimum Detected	Maximum Detected	Frequency of Detection	Location of Maximum Detect
Metals (ug/l)					
Arsenic, ICP-MS	1.4	1.11	1.617	4/4	RW-08
Barium, ICP-MS	1000	7.633	7.728	4/4	BKGND-02
Boron, ICP-MS	NE	3767	3850	4/4	RW-07
Cadmium, ICP-MS	5	0.00303	0.0114	4/4	RW-06
Chromium, ICP-MS	300	0.2763	0.2973	4/4	RW-07
Chromium VI , ICP-MS	NE	0.00782 U	0.00782 U	0/4	
Copper, ICP-MS	NE	0.1755	0.4057	4/4	RW-07
Iron, ICP-MS	NE	23.5 U	23.5 U	0/4	
Lead, ICP-MS	NE	0.0098	0.01674	4/4	RW-07
Manganese, ICP-MS	100	0.6516	0.8385	4/4	BKGND-02
Mercury, ICP-MS	0.025	0.00048	0.00145	4/4	BKGND-02
Selenium, ICP-MS	10	0.694 U	0.694 U	0/4	
Silver, ICP-MS	2	0.3281	0.5628	4/4	RW-08
Zinc, ICP-MS	50	0.342 UJ	0.342 UJ	0/4	
Conventional (mg/l)					
Ammonia as Nitrogen	NE	0.011	0.015	4/4	BKGND-02
Sulfide (Modified)	NE	0.00115 J	0.00278 J	4/4	RW-08
Cyanide	0.001	0.005 U	0.005 U	0/4	
Fluoride	1.3	0.6	0.68	4/4	RW-07
Nitrate + Nitrite-N	NE	0.01 U	0.01 U	0/4	
Oil & Grease	NE	1.1 UJ	1.1 UJ	0/4	
Phenolics Recoverable	0.01	0.04 U	0.04 U	0/4	
Color (pcu)	NE	5 U	5 U	0/4	
Field Measurements					
pH	7.3-8.5	8.04	8.19	4/4	RW-07
Dissolved Oxygen	> 4	5.3	8.13	4/4	BKGND-02
Turbidity (NTU)	10	3	3	4/4	BKGND-02, RW-06, RW-08
Temperature	32	29	29.7	4/4	RW-07

NA - Not Analyzed
NE - Not Establ Detection Limit Exceeds WQC
Exceeds WQC

The Field Measurem at the time of sample collection. Battelle did not perform this analysis.

TABLE 3-11
BAHIA SALINA DEL SUR - DATA STATISTICS SUMMARY
BATTELLE, DISSOLVED CONSTITUENTS
VIEQUES WATER QUALITY STUDY
CTO-0395

	Water Quality Criteria	Minimum Detected		Maximum Detected		Frequency of Detection	Location of Maximum Detect
Metals (ug/l)							
Arsenic, ICP-MS	NE	1.018		1.29		4/4	RW-06
Barium, ICP-MS	NE	7.312		7.696		4/4	RW-06
Boron, ICP-MS	NE	3744		3926		4/4	RW-06
Cadmium, ICP-MS	NE	0.00326		0.01163		4/4	RW-08
Chromium, ICP-MS	NE	0.2532		0.2873		4/4	RW-08
Chromium VI , ICP-MS	NE	0.00782	U	0.00782	U	0/4	
Copper, ICP-MS	2.4	0.1612		0.3838		4/4	RW-07
Iron, ICP-MS	NE	23.5	U	23.5	U	0/4	
Lead, ICP-MS	8.1	0.00793		0.01006		4/4	RW-07
Manganese, ICP-MS	NE	0.579		0.7415		4/4	RW-07
Mercury, ICP-MS	NE	0.00043		0.00098		4/4	BKGND-02
Selenium, ICP-MS	NE	0.694	U	0.694	U	0/4	
Silver, ICP-MS	NE	0.275		0.5777		3/4	RW-08
Zinc, ICP-MS	NE	0.342	UJ	0.342	UJ	0/4	

TABLE 3-12
BACKGROUND DATA
BATTELLE LABORATORY, TOTAL CONSTITUENTS
VIEQUES WATER QUALITY STUDY
CTO-0395

SAMPLE ID LAB ID	Water Quality Criteria	BKGND-01 BATTELLE	BKGND-03 BATTELLE	BKGND-04 BATTELLE	RW-01 BATTELLE	RW-02 BATTELLE	RW-03 BATTELLE	RW-04 BATTELLE	RW-05 BATTELLE	RW-09 BATTELLE	RW-10 BATTELLE
Metals (ug/L)											
Arsenic, ICP-MS	1.4	1.142	NA	1.304	1.15	1.293	1.004	1.283	1.485	1.286	1.238
Barium, ICP-MS	1000	7.57	NA	7.731	7.542	7.413	7.517	7.773	7.603	7.56	7.711
Boron, ICP-MS	NE	4052	NA	4663	4647	4133	4633	3966	3972	4000	4002
Cadmium, ICP-MS	5	0.00505	NA	0.00534	0.00681	0.00698	0.00435	0.00524	0.00548	0.00882	0.0046
Chromium, ICP-MS	300	0.2742	NA	0.3116	0.2445	0.2583	0.2398	0.2731	0.317	0.2702	0.2756
Chromium VI, ICP-MS	NE	0.00782 U	NA	0.00782 U	0.00782 U	0.00782 U	0.00782 U	0.00782 U	0.00782 U	0.00782 U	0.00782 U
Copper, ICP-MS	NE	0.1574	NA	0.5057	0.1655	0.1755	0.1713	0.1459	0.1481	0.1384	0.1603
Iron, ICP-MS	NE	23.5 U	NA	55.52	23.5 U	23.5 U	23.5 U	23.5 U	23.5 U	23.5 U	23.5 U
Lead, ICP-MS	NE	0.01154	NA	0.2643	0.013	0.00977	0.01763	0.01153	0.00991	0.2519	0.00974
Manganese, ICP-MS	100	0.4484	NA	2.215	0.583	0.3977	0.5841	0.4314	0.4605	0.4473	0.5203
Mercury, ICP-MS	0.025	0.00041	NA	0.00123	0.0005	0.00056	0.00055	0.00083	0.00071	0.00046	0.00071
Selenium, ICP-MS	10	0.694 U	NA	0.694 U	0.694 U	0.694 U	0.694 U	0.694 U	0.694 U	0.694 U	0.694 U
Silver, ICP-MS	2	0.254 U	NA	0.254 U	0.254 U	0.254 U	0.254 U	0.254 U	0.254 U	0.7025	0.254 U
Zinc, ICP-MS	50	0.768 J	NA	0.9056 J	1.373 J	0.342 UJ	0.3922 J	0.5251 J	0.5344 J	0.342 UJ	0.9363 J
Conventional (mg/L)											
Ammonia as Nitrogen	NE	0.012	0.01	0.012	0.011	0.014	0.012	0.011	0.013	NA	NA
Cyanide	0.001	0.005 U	0.005 U	0.005 U	0.005 U	0.005 U	0.005 U	0.005 U	0.005 U	0.005 U	0.005 U
Fluoride	1.3	0.67	0.6	0.67	0.64	0.67	0.64	0.73	0.6	0.6	0.63
Nitrate + Nitrite-N	NE	0.01 U	0.01 U	0.01 U	0.01 U	0.01 U	0.01 U	0.01 U	0.01 U	0.01 U	0.01 U
Oil & Grease	NE	1 U	1 UJ	1 U	1 U	1 U	2.4	1 UJ	1 UJ	1.2 J	1 UJ
Phenolics Recoverable	0.01	0.04 U	0.04 U	0.04 U	0.04 U	0.04 U	0.04 U	0.04 U	0.04 U	NA	0.04 U
Sulfide (Modified)	0.002	NA	0.00287 J	NA	NA	NA	NA	0.00315 J	0.00133 J	0.003 J	0.00505 J
Sulfide	0.002	0.05 U	0.05	0.05 U	0.05 U	0.05 U	0.05 U	NA	NA	NA	NA
Color (pcu)	NE	5 U	5 U	5 U	5 U	5 U	5 U	5 U	5 U	5 U	5 U
Field Measurements											
pH	7.3-8.5	8	8.2	8	7.24	7.76	7.47	7.99	8.16	8.19	8.19
Dissolved Oxygen	> 4	5.1	8.13	4.23	6.88	6.71	5.18	5.29	5.91	5.54	6.32
Turbidity (NTU)	10	10 U	3	1	10 U	10 U	2	10 U	10 U	10 U	10 U
Temperature	32	28.1	30.2	30.1	27.79	27.8	28.8	28.9	29.3	29.3	29.3

NA - Not Analyzed
NE - Not Established
Detection Limit Exceeds WQC
Exceeds WQC

TABLE 3-12
BACKGROUND DATA
BATTELLE LABORATORY, TOTAL CONSTITUENTS
VIEQUES WATER QUALITY STUDY
CTO-0395

SAMPLE ID LAB ID	Water Quality Criteria	SP-01 BATTELLE	SP-02 BATTELLE	SP-03 BATTELLE	SP-08 BATTELLE	SP-09 BATTELLE	SP-10 BATTELLE	SP-11 BATTELLE	SP-12 BATTELLE
Metals (ug/L)									
Arsenic, ICP-MS	1.4	1.229	1.218	1.116	1.258	1.406	1.098	1.42	NA
Barium, ICP-MS	1000	7.62	7.31	7.529	7.822	7.7	7.552	7.674	NA
Boron, ICP-MS	NE	4695	4638	4666	3975	4020	4045	3950	NA
Cadmium, ICP-MS	5	0.00299 U	0.00461	0.00427	0.00468	0.00429	0.01352	0.00491	NA
Chromium, ICP-MS	300	0.266	0.2688	0.2275	0.2399	0.2596	0.2555	0.2818	NA
Chromium VI, ICP-MS	NE	0.00782 U	0.00782 U	0.00782 U	0.00782 U	0.00782 U	0.00782 U	0.00782 U	NA
Copper, ICP-MS	NE	0.1703	0.1556	0.1208	0.1518	0.1493	0.1819	0.169	NA
Iron, ICP-MS	NE	23.5 U	23.5 U	23.5 U	23.5 U	23.5 U	23.5 U	23.5 U	NA
Lead, ICP-MS	NE	0.01015	0.01519	0.02201	0.02293	0.0088	0.02079	0.01808	NA
Manganese, ICP-MS	100	0.6692	0.5385	0.654	0.4882	0.6475	1.031	0.7402	NA
Mercury, ICP-MS	0.025	0.00065	0.00076	0.00143	0.00074	0.00062	0.0007	0.00114	NA
Selenium, ICP-MS	10	0.694 U	0.694 U	0.694 U	0.694 U	0.694 U	0.694 U	0.694 U	NA
Silver, ICP-MS	2	0.254 U	0.254 U	0.3942	0.2763	0.254 U	0.254 U	0.254 U	NA
Zinc, ICP-MS	50	0.9771 J	0.342 UJ	0.342 UJ	1.155 J	0.342 UJ	0.342 UJ	1.143 J	NA
Conventional (mg/L)									
Ammonia as Nitrogen	NE	0.014	0.012	0.012	0.01	0.01 U	0.01	0.01 U	0.01
Cyanide	0.001	0.005 U	0.005 U	0.005 U	0.005 U	0.005 U	0.005 U	0.005 U	0.005 U
Fluoride	1.3	0.64	0.67	0.62	0.58	0.63	0.65	0.6	0.6
Nitrate + Nitrite-N	NE	0.01 U	0.01 U	0.01 U	0.01 U	0.01 U	0.01 U	0.01 U	0.01 U
Oil & Grease	NE	1 U	1 U	1 U	1.1 UJ	1 UJ	1.5 J	1.2 UJ	1 UJ
Phenolics Recoverable	0.01	0.04 U	0.04 U	0.04 U	0.04 U	0.04 U	0.04 U	0.04 U	0.04 U
Sulfide (Modified)	0.002	NA	NA	NA	0.00178 J	0.00205 J	0.0022 J	0.00205 J	0.00349 J
Sulfide	0.002	0.05 U	0.05 U	0.05 U	NA	NA	NA	NA	NA
Color (pcu)	NE	5 U	5 U	5 U	5 U	5 U	5 U	5 U	5 U
Field Measurements									
pH	7.3-8.5	8.1	7.74	7.36	8.02	8.15	8.1	8.2	8
Dissolved Oxygen	> 4	5.1	5.26	5.04	7.8	5.97	8.07	6.89	5.06
Turbidity (NTU)	10	--	10 U	2	2	3	1	3	4
Temperature	32	29	29.1	28.9	29.5	30.3	30.1	30.4	29.4

NA - Not Analyzed
NE - Not Established
Detection Limit Exceeds WQC
Exceeds WQC

TABLE 3-13
BACKGROUND DATA
BATTELLE LABORATORY, DISSOLVED CONSTITUENTS
VIEQUES WATER QUALITY STUDY
CTO-0395

SAMPLE ID LAB ID	Water Quality Criteria	BKGND-01 BATTELLE	BKGND-03 BATTELLE	BKGND-04 BATTELLE	RW-01 BATTELLE	RW-02 BATTELLE	RW-03 BATTELLE	RW-04 BATTELLE	RW-05 BATTELLE	RW-09 BATTELLE	RW-10 BATTELLE
Metals (ug/l)											
Arsenic, ICP-MS	NE	1.235	NA	1.238	1.275	1.16	1.305	1.296	1.274	1.053	1.179
Barium, ICP-MS	NE	7.352	NA	7.55	7.383	7.317	7.218	7.335	7.36	7.531	7.591
Boron, ICP-MS	NE	4144	NA	4642	4701	4158	4659	4096	4077	4086	4063
Cadmium, ICP-MS	NE	0.00906	NA	0.00608	0.00299 U	0.00367	0.00356	0.03044	0.00461	0.01241	0.0044
Chromium, ICP-MS	NE	0.2547	NA	0.2933	0.2723	0.2504	0.2828	0.2595	0.2606	0.2918	0.2517
Chromium VI , ICP-MS	NE	0.00782 U	NA	0.00782 U	0.00782 U	0.00782 U	0.00782 U	0.00782 U	0.00782 U	0.00782 U	0.00782 U
Copper, ICP-MS	2.4	0.3697	NA	0.4189	0.3059	0.2399	0.1699	0.1601	0.1548	0.1475	0.1431
Iron, ICP-MS	NE	23.5 U	NA	32.44	23.5 U	23.5 U	30.16	23.5 U	23.5 U	23.5 U	23.5 U
Lead, ICP-MS	8.1	0.01772	NA	0.0911	0.00946	0.00724	0.01666	0.00976	0.00823	0.01642	0.00765
Manganese, ICP-MS	NE	0.6247	NA	1.246	0.5753	0.5816	0.5486	0.5001	0.4366	0.5456	0.4553
Mercury, ICP-MS	NE	0.00087	NA	0.00048	0.00039	0.00045	0.00053	0.00243	0.00055	0.00092	0.00052
Selenium, ICP-MS	NE	0.694 U	NA	0.694 U	0.694 U	0.694 U	0.694 U	0.694 U	0.694 U	0.694 U	0.694 U
Silver, ICP-MS	NE	0.254 U	NA	0.254 U	0.2553	0.254 U	0.494	0.254 U	0.254 U	0.254 U	0.254 U
Zinc, ICP-MS	NE	1.564 J	NA	1.466 J	1.162 J	0.9976 J	0.7035 J	1.105 J	1.682 J	0.7929 J	0.9261 J

NA - Not Analyzed
NE - Not Established
Detection Limit Exceeds WQC
Exceeds WQC

TABLE 3-13
BACKGROUND DATA
BATTELLE LABORATORY, DISSOLVED CONSTITUENTS
VIEQUES WATER QUALITY STUDY
CTO-0395

SAMPLE ID LAB ID	Water Quality Criteria	SP-01 BATTELLE	SP-02 BATTELLE	SP-03 BATTELLE	SP-08 BATTELLE	SP-09 BATTELLE	SP-10 BATTELLE	SP-11 BATTELLE	SP-12 BATTELLE
Metals (ug/l)									
Arsenic, ICP-MS	NE	1.332	1.16	1.203	1.352	1.404	1.304	1.102	NA
Barium, ICP-MS	NE	7.042	7.103	7.304	7.585	7.572	7.4	7.504	NA
Boron, ICP-MS	NE	4766	4570	4719	4068	4060	4153	4049	NA
Cadmium, ICP-MS	NE	0.00752	0.00412	0.00572	0.00612	0.01124	0.00597	0.01286	NA
Chromium, ICP-MS	NE	0.299	0.2697	0.2612	0.246	0.2992	0.275	0.3023	NA
Chromium VI , ICP-MS	NE	0.00782 U	0.00782 U	0.00782 U	0.00782 U	0.00782 U	0.00782 U	0.00782 U	NA
Copper, ICP-MS	2.4	0.1695	0.1451	0.2051	0.2226	0.1543	0.2307	0.2362	NA
Iron, ICP-MS	NE	26.29	23.5 U	23.5 U	23.5 U	23.5 U	23.5 U	23.5 U	NA
Lead, ICP-MS	8.1	0.00976	0.01181	0.1213	0.0096	0.01662	0.01451	0.01184	NA
Manganese, ICP-MS	NE	0.662	0.6555	0.5924	0.5335	0.6344	0.8263	0.68	NA
Mercury, ICP-MS	NE	0.00071	0.00153	0.00058	0.00046	0.00049	0.00046	0.0007	NA
Selenium, ICP-MS	NE	0.694 U	0.694 U	0.694 U	0.694 U	0.694 U	0.694 U	0.694 U	NA
Silver, ICP-MS	NE	0.254 U	0.456	0.254 U	0.254 U	0.254 U	0.408	0.254 U	NA
Zinc, ICP-MS	NE	1.036 J	0.7913 J	1.441 J	0.5233 J	0.342 UJ	0.7429 J	0.342 UJ	NA

NA - Not Analyzed
NE - Not Established
Detection Limit Exceeds WQC
Exceeds WQC

TABLE 3-14
BACKGROUND DATA STATISTICS SUMMARY
BATTELLE, TOTAL CONSTITUENTS
VIEQUES WATER QUALITY STUDY
CTO-0395

	Minimum Detected	Maximum Detected	Frequency of Detection	Location of Maximum Detect
Metals (ug/l)				
Arsenic, ICP-MS	1.004	1.485	16/16	RW-05
Barium, ICP-MS	7.31	7.822	16/16	SP-08
Boron, ICP-MS	3950	4695	16/16	SP-01
Cadmium, ICP-MS	0.00427	0.01352	15/16	SP-10
Chromium, ICP-MS	0.2275	0.317	16/16	RW-05
Chromium VI , ICP-MS	0.00782 U	0.00782 U	0/16	
Copper, ICP-MS	0.1208	0.5057	16/16	BKGND-04
Iron, ICP-MS	55.52	55.52	1/16	BKGND-04
Lead, ICP-MS	0.0088	0.2643	16/16	BKGND-04
Manganese, ICP-MS	0.3977	2.215	16/16	BKGND-04
Mercury, ICP-MS	0.00041	0.00143	16/16	SP-03
Selenium, ICP-MS	0.694 U	0.694 U	0/16	
Silver, ICP-MS	0.2763	0.7025	3/16	RW-09
Zinc, ICP-MS	0.3922 J	1.373 J	10/16	RW-01
Conventional (mg/l)				
Ammonia as Nitrogen	0.01	0.014	14/16	RW-02,SP-01
Cyanide	0.005 U	0.005 U	0/18	
Fluoride	0.58	0.73	18/18	RW-04
Nitrate + Nitrite-N	0.01 U	0.01 U	0/18	
Oil & Grease	1.2 J	2.4	3/18	RW-03
Phenolics Recoverable	0.04 U	0.04 U	0/17	
Sulfide (Modified)	0.00133 J	0.00505 J	10/10	RW-10
Sulfide	0.05	0.05	1/9	BKGND-03
Color (pcu)	5 U	5 U	0/18	
Field Measurements				
pH	7.24	8.2	18/18	BKGND-03,SP-11
Dissolved Oxygen	4.23	8.13	18/18	BKGND-03
Turbidity (NTU)	1	4	9/17	SP-12
Temperature	27.79	30.4	18/18	SP-11

TABLE 3-15
BACKGROUND DATA STATISTICS SUMMARY
BATTELLE, DISSOLVED CONSTITUENTS
VIEQUES WATER QUALITY STUDY
CTO-0395

	Minimum Detected	Maximum Detected	Frequency of Detection	Location of Maximum Detect
Metals (ug/l)				
Arsenic, ICP-MS	1.053	1.404	16/16	SP-09
Barium, ICP-MS	7.042	7.591	16/16	RW-10
Boron, ICP-MS	4049	4766	16/16	SP-01
Cadmium, ICP-MS	0.00356	0.03044	15/16	RW-04
Chromium, ICP-MS	0.246	0.3023	16/16	SP-11
Copper, ICP-MS	0.1431	0.4189	16/16	BKGND-04
Iron, ICP-MS	26.29	32.44	3/16	BKGND-04
Lead, ICP-MS	0.00724	0.1213	16/16	SP-03
Manganese, ICP-MS	0.4366	1.246	16/16	BKGND-04
Mercury, ICP-MS	0.00039	0.00243	16/16	RW-04
Selenium, ICP-MS	0.694 U	0.694 U	0/16	
Silver, ICP-MS	0.2553	0.494	4/16	RW-03
Zinc, ICP-MS	0.5233 J	1.682 J	14/16	RW-05
Chromium VI, ICP-MS	0.00782 U	0.00782 U	0/16	

TABLE 3-16
COMPARISON OF CONCENTRATION RANGES
BATTELLE TOTAL CONSTITUENTS
VIEQUES WATER QUALITY STUDY
CTO - 0395

Constituent	Water Quality Criteria	Range of Bay Samples		Range of Background Samples	
		Minimum Reported	Maximum Reported	Minimum Reported	Maximum Reported
Metals (ug/l)					
Arsenic, ICP-MS	1.4	1.11	1.617	1.004	1.485
Barium, ICP-MS	1,000	7.633	7.728	7.31	7.822
Boron, ICP-MS	NE	3767	3850	3950	4695
Cadmium, ICP-MS	5	0.00303	0.0114	0.00299 U	0.01352
Chromium, ICP-MS	300	0.2763	0.2973	0.2275	0.317
Chromium VI , ICP-MS	NE	0.00782 U	0.00782 U	0.00782 U	0.00782 U
Copper, ICP-MS	NE	0.1755	0.4057	0.1208	0.5057
Iron, ICP-MS	NE	23.5 U	23.5 U	23.5 U	55.52
Lead, ICP-MS	NE	0.0098	0.01674	0.0088	0.2643
Manganese, ICP-MS	100	0.6516	0.8385	0.3977	2.215
Mercury, ICP-MS	0.025	0.00048	0.00145	0.00041	0.00143
Selenium, ICP-MS	10	0.694 U	0.694 U	0.694 U	0.694 U
Silver, ICP-MS	2	0.3281	0.5628	0.254 U	0.7025
Zinc, ICP-MS	50	0.342 UJ	0.342 UJ	0.342 UJ	1.373 J
Conventional (mg/l)					
Ammonia as Nitrogen	NE	0.011	0.015	0.01 U	0.014
Sulfide (Modified)	0.002	0.00115 J	0.00278 J	0.00133 J	0.00505 J
Sulfide		NA	NA	0.05	0.05
Cyanide	0.001	0.005 U	0.005 U	0.005 U	0.005 U
Fluoride	1.3	0.6	0.68	0.58	0.73
Nitrate + Nitrite-N	NE	0.01 U	0.01 U	0.01 U	0.01 U
Oil & Grease	NE	1.1 UJ	1.1 UJ	1 UJ	2.4
Phenolics Recoverable	0.01	0.04 U	0.04 U	0.04 U	0.04 U
Color (pcu)	NE	5 U	5 U	5 U	5 U
Field Measurements					
pH	7.3-8.5	8.04	8.19	7.24	8.2
Dissolved Oxygen	> 4	5.3	8.13	4.23	8.13
Turbidity (NTU)	10	3	3	1	4
Temperature	32	29	29.7	27.79	30.4

NE - Not Established

Detection Limit Exceeds WQC

Exceeds WQC

TABLE 3-17
COMPARISON OF CONCENTRATION RANGES
BATTELLE DISSOLVED CONSTITUENTS
VIEQUES WATER QUALITY STUDY
CTO - 0395

Constituent	Water Quality Criteria	Range of Bay Samples				Range of Background Samples			
		Minimum Reported		Maximum Reported		Minimum Reported		Maximum Reported	
Metals (ug/l)									
Arsenic, ICP-MS	NE	1.018		1.29		1.053		1.404	
Barium, ICP-MS	NE	7.312		7.696		7.042		7.591	
Boron, ICP-MS	NE	3744		3926		4049		4766	
Cadmium, ICP-MS	NE	0.00326		0.01163		0.00299	U	0.03044	
Chromium, ICP-MS	NE	0.2532		0.2873		0.246		0.3023	
Chromium VI , ICP-MS	NE	0.00782	U	0.00782	U	0.00782	U	0.00782	U
Copper, ICP-MS	2.4	0.1612		0.3838		0.1431		0.4189	
Iron, ICP-MS	NE	23.5	U	23.5	U	23.5	U	32.44	
Lead, ICP-MS	8.1	0.00793		0.01006		0.00724		0.1213	
Manganese, ICP-MS	NE	0.579		0.7415		0.4366		1.246	
Mercury, ICP-MS	NE	0.00043		0.00098		0.00039		0.00243	
Selenium, ICP-MS	NE	0.694	U	0.694	U	0.694	U	0.694	U
Silver, ICP-MS	NE	0.254	U	0.5777		0.254	U	0.494	
Zinc, ICP-MS	NE	0.342	UJ	0.342	UJ	0.342	UJ	1.682	J

NE - Not Established

Detection Limit Exceeds WQC

Exceeds WQC

FIGURES

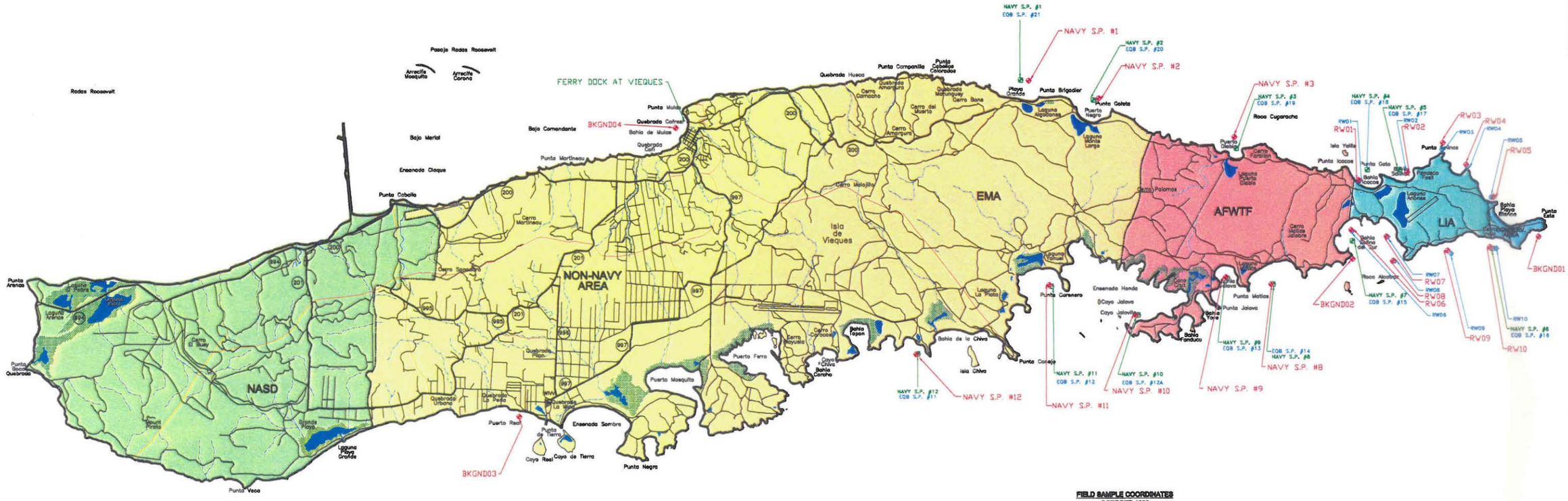

FIELD SAMPLE COORDINATES
OCTOBER 1999

SAMPLE ID	EASTING	NORTHING
NAVY S.P. #1	248934.40	2009654.07
NAVY S.P. #2	250445.52	2009278.19
NAVY S.P. #3	253390.74	2008444.31
NAVY S.P. #12	248470.39	2003753.18
RW01	258069.99	2007518.16
RW02	257120.45	2007886.61
RW03	257894.71	2008323.16
RW04	258402.45	2007854.46
RW05	258992.30	2007164.09
RW06	256810.59	2005786.03
RW07	256664.43	2006308.33
RW08	256810.59	2005786.03
NAVY S.P. #8	254170.52	2005269.13
RW09	257991.05	2006002.37
NAVY S.P. #9	253197.27	2005425.99
RW10	258910.03	2006079.63
NAVY S.P. #10	251229.95	2004601.64
NAVY S.P. #11	249361.41	2005254.03
BKGND01	259950.36	2006306.84
BKGND02	255630.70	2005819.99
BKGND03	237867.00	2002398.22
BKGND04	241276.08	2008629.88

COORDS ARE IN UTM ZONE 20, NAD 83

CWANPDES SAMPLE LEGEND

NAVY S.P. #4	NAVY SAMPLE LOCATION (JUNE 17, 1999)
EQB S.P. #18	EQB SAMPLE LOCATION (JUNE 17, 1999)
RW01	BACKGROUND SAMPLE LOCATION (JUNE 11, 1999)
	FIELD SAMPLE LOCATION (OCTOBER 1999)

NAVY NUMBERING IS CHRONOLOGICALLY. EQB HAD ALREADY NUMBERED THEIR LOCATIONS FOR SAMPLING.
SAMPLING LOCATIONS (S.P.) ARE AS FOLLOWS IN CHRONOLOGICAL ORDER: PLAYA GRANDE (1), PUERTO NEGRO (2), PUERTO DIABLO (3), BAHIA ICACOS (4), BAHIA SALINAS (5), SHORE LINE SOUTH OF CERRO INDIO (6), BAHIA SALINAS DEL SUR (7), SOUTH EAST OF LAGUNA MATIAS (8), BAHIA JALOVA (9), ENSENADA HONDA WEST OF CAYO JALOVITA (10), ENSENADA HONDA WEST OF CAYO YANUEL (11), AND BETWEEN THE PENINSULA (LOCATED WEST OF BAHIA CHIVA) AND BAHIA TAPON (12).

0 400 1200 2000
1 CM = 400 M

REVISIONS		NORTH				FIGURE
	DRAWN GLB REVIEWED REB S.O.# 69470-385-0000 CADD# 2138014V MISSING PANELS/PROBLEMS/ERRORS			VIEQUES ISLAND PUERTO RICO BAKER ENVIRONMENTAL, Inc. Coraopolis, Pennsylvania	Baker	SAMPLE LOCATION MAP WATER QUALITY SAMPLING STUDY VIEQUES ISLAND, PUERTO RICO SCALE AS SHOWN DATE JUNE, 2000	1

APPENDIX A
TRACE METALS IN SEAWATER SAMPLING AND ANALYSIS PLAN - ATLANTIC FLEET WEAPONS TRAINING FACILITY, VIEQUES ISLAND, PUERTO RICO

FINAL

TRACE METALS IN SEAWATER SAMPLING AND ANALYSIS PLAN ATLANTIC FLEET WEAPONS TRAINING FACILITY

VIEQUES ISLAND, PUERTO RICO

CONTRACT TASK ORDER 0395

OCTOBER 8, 1999

Prepared for:

DEPARTMENT OF THE NAVY
ATLANTIC DIVISION
NAVAL FACILITIES
ENGINEERING COMMAND
Norfolk, Virginia

Under the:

LANTDIV CLEAN Program
Contract N62470-89-D-4814

Prepared by:

BAKER ENVIRONMENTAL, INC.
Coraopolis, Pennsylvania

TABLE OF CONTENTS

Page

1.0 INTRODUCTION 1

2.0 TRACE METAL "CLEAN" SAMPLING 1
2.1 Pre-Field Sampling Activities 1
2.2 Sampling Program 2
2.2.1 Sample Locations 2
2.2.2 Sample Analysis 3
2.2.3 Sampling Procedures 3

3.0 CONVENTIONAL SAMPLING PROGRAM 8

LIST OF TABLES

Table 1 - Analytical Methods
Table 2 - General Sampling Requirements and Holding Times
Table 3 - Summary of Clean Metals Sample Analytical Requirements
Table 4 - Summary of Conventional Metals Sample Analytical Requirements

LIST OF FIGURES

Figure 1 – CWA/NPDES Sample Location Map

ATTACHMENTS

Attachment A - EPA Method 1669 "Sampling Ambient Water for Trace Metals at EPA Water Quality Criteria Levels"

1.0 INTRODUCTION

The purpose of this Sampling and Analysis Plan (in conjunction with the Quality Assurance Project Plan) is to provide clean-metals sampling services in support of NPDES permit negotiations associated with the Atlantic Fleet Weapons Training Facility (AFWTF) at Vieques Island, Puerto Rico. This effort is being conducted in response to the Atlantic Division, Naval Facilities Engineering Command's (LANTDIV's) Scope Modification for CTO-0395 (September 27, 1999) and subsequent modifications as coordinated via numerous conference calls between LANTDIV, Baker Environmental, and the laboratories.

The purpose of this project is to provide high quality trace metals data (and other data per current permit requirements) by following the sampling and analyses procedures specified under EPA Method 1669 Sampling Ambient Water for Trace Metals at EPA Quality Criteria Levels" (Attachment A). This will be accomplished through the use of two "clean" laboratories, Battelle Ocean Sciences and Columbia Analytical Services, Inc. Sampling will be performed in the Bahia Salina del Sur and waters surrounding the AFWTF at Vieques Island.

2.0 TRACE METAL "CLEAN" SAMPLING

2.1 Pre-Field Sampling Activities

Prior to the use of any sampling equipment in the field, equipment blanks must be generated in the laboratory to demonstrate that the equipment/material to be used for the trace metals sample collection is free from contamination (Method 1669, Chapter 2.0). The clean metals program will consist of a preliminary sampling task that generates a minimum of two equipment blanks (actual number is dependent on the number of equipment cleaning events or materials tested) demonstrating that the sampling related items are contaminant free. An acceptable blank is one that is free from contamination below the minimum levels specified in the appropriate method 1600 series analytical methods. The equipment/material to be cleaned and tested are:

- Sample bottles (Teflon and polyethylene)
- Preservatives (Trace metal or Ultra-pure grade)

  HNO_3 (for most total and dissolved metals)

  HCl (for O&G, mercury)

  NaOH (for hexavalent chromium, cyanide, and sulfide)

  H_2SO_4 (for phenolic substances)
- Reagent water (Laboratory supplied "contaminate-free" water, or ASTM Type I)
- Sample tubing (Teflon and Flouropolymer), hose connectors and Y splitters

Once demonstrated to be clean, the equipment will be individually double-bagged and shipped to Puerto Rico for the field portion of this project. Samples labels will be placed on the inner bag. Sufficient sampling equipment/material will be supplied to collect a total of 22 primary field samples, 5 field blanks, 3 duplicate field samples, and 1 blind control during the 5-day field-sampling program discussed below.

2.2 Sampling Program

2.2.1 Sample Locations

The samples will be obtained using the "clean" sampling protocol developed under EPA Method 1669, (Attachment A) from the following points:

- RW-01 through RW-10 (Background Stations)
- SP#1, SP#2, SP#3, SP#8, SP#9, SP#10, SP#11, and SP#12 (Navy sampling locations)
- One point east of Punte del Este
- One point on the west side of the mouth of Bahia Salina del Sur
- One point north of Isabel Segunda
- One point south of Esperanza

Figure 1 shows the sampling locations.

2.2.2 Sample Analysis

Analysis will be for the parameters listed on the Navy's NPDES permit for the AFWTF range by the methods specified on Table 1 (see columns pertaining to Battelle and Columbia). All samples will be properly containerized and preserved as shown on Table 2 (extra volume has been accounted for to compensate for the more difficult sea water matrix). Appropriate field QC samples will be taken as required under EPA Method 1669, chapter 9. See Table 3 for complete sampling matrix, including QA/QC sample requirements.

In accordance with Method 1669, Section 2.10, the hexavalent chromium samples will be preserved in the field. Due to the nature of the sampling as well as the logistics of next day shipments in Puerto Rico the hexavalent chromium samples will likely not be analyzed within the standard 24-hr hold period; however, Method 1669 indicates that field preservation can increase the sample holding time for hexavalent chromium to 30 days.

2.2.3 Sampling Procedures

General

"Clean" metals program samples will be collected at mid-depth using a continuous-flow sampler as described in Method 1669, Section 6.5.2. The continuous-flow sampler uses a peristaltic pump to pump sample to the boat from the appropriate depth. Using previous sample results to determine the sample order from low concentration to high concentration sites will allow for the use of the same set of pre-cleaned pump and sample collection tubing to collect samples at more than one site. The tubing will be changed on a daily basis. The depth of the sample will be determined by estimating the depth to using a rope weighted with a nonmetallic weight or an electronic "depth" gauge. The sample will be collected upstream of the boat, as possible, and especially the boat engines. The GPS operator will determine the sampling coordinates for each of the 22 primary sampling locations.

Program Specific "Clean" Metals Sampling Procedure

The "clean" metals sampling team will consist of at least three persons:

- Boat pilot (Navy designated personnel) (note: will not handle samples)
- Sampling team (a clean sampling coordinator and a GPS operator) [Note: The clean sampling coordinator serves as the clean hands person. The dirty hands person is also the GPS operator.]

The Clean Sampling team will consist of two samplers, one will be designated as "Clean Hands" (CH) and the other as "Dirty Hands" (DH). The CH sampler is responsible for collecting all samples and will be required to wear arm length plastic gloves. The DH sampler will be responsible for setting up equipment, recording field notes, and assisting the CH sampler in accessing sample containers and other functions not requiring sample handling. The DH sampler must wear wrist length gloves. The Clean Sampling Coordinator will be responsible for the hands-on sampling efforts and field-refine these sampling procedures to minimize the potential for sample contamination (all field adjustments to this SAP will be carefully documented and included in the Technical Memorandum concerning the sample results comparison). The GPS Operator will locate each of the sample points.

Field Samples

Field blanks, primary samples, duplicates, and other QA/QC samples will be collected in accordance with these procedures and the sample matrix provided as Table 3. The following procedures summarize Method 1669 procedures and should be used as guidance for the clean metals sampling event:

- Pre-cleaned equipment, and tubing, sample containers, etc. provided by the clean labs; sample containers, tubing in-line filters will be double-bagged.

- A clean area will be set up within the boat. The area will be cleaned with water and covered with plastic to reduce particulate contamination

- The clean metals sampling team will remove anything metal (e.g., jewelry, buttons). Other non-removable metals sources (snaps, belt buckles, glasses frames, etc.) on each

person should be covered with duct tape or masking tape. If possible, each party should wash their hands and triple rinse with reagent water prior to donning Personal Protective Equipment (PPE). The DH will put on pre-cleaned PPE (tyvek suits, gloves, etc.) (Note: the pilot may not be required to wear PPE if he can remove himself from the immediate sampling area.)

- DH sampler should then assist CH sampler in donning PPE, (tyvek suit, gloves, etc.) including shoulder length gloves. Gloves may be taped to the shoulder, if necessary, to keep them from slipping down the arms.

- DH sampler sets up peristaltic pump on the clean area and changes gloves. DH sampler runs the pump tubing through pump, taking care not to touch the ends and changes gloves. CH sampler will lower the sample collection tubing (weighted with a Teflon weight) to mid-depth (or into a reagent water vessel for field blanks) and connect the sample collection tubing to the pump tubing using a cleaned hose connector. A "Y" connection will be used to collect the samples simultaneously. DH sampler retrieves double-bagged sample collection vessels (or pre-preserved, pre-labeled sample bottles). DH sampler always opens outer bag and CH sampler always retrieves inner bag. CH sampler opens inner bag and takes caps off sample bottles – minimal exposure to air is desirable.

- CH sampler flushes tubing by holding end out over the edge of boat and DH turns on the peristaltic pump. Seawater should be allowed to flush through the tubing for a minimum of one minute (reagent water for field blanks should be 1-liter flush). All discharges will be down current of the boat. DH sampler turns peristaltic pump off and CH sampler places end of tubing into sample collection bottle (or each individual pre-preserved, pre-labeled sample bottle, one at a time) taking care not to touch the inner bag or the sample bottle(s) themselves.

- CH sampler dictates on-off operation of the pump by the DH sampler, taking care not to overfill the bottles.

- For dissolved metals collection (recommended last sample collected), an in-line, pre-cleaned, 0.45-micron tortuous path filter (minimum 600 square centimeters – e.g., Gelman or Calyx) will be used. The filter will be removed from the inner bag and

flushed into the sea for a minimum of one minute (reagent water for field blanks should be 1-liter flush). All discharges will be down current of the boat.

- DH will retrieve bag containing pre cleaned 0.45 micron filter. DH will open outer bag CH will open inner bag and remove 0.45 micron filter.

Field Blank

- Rinse outside of first meter of inlet end of sample collection tubing that has been in sea, with Type 1 water to rinse away salt water and any other contamination. Take field blank by first flushing assembly with one (1) liter of Type I water.

- Place inlet end of sample hose in bottle of Type 1 water. Flush assembly with one (1) liter of Type 1 water. Ensure discharge is overboard and down current.

- DH will open outer bag for field sample. CH will open inner bag and remove bottle cap. CH places filter outlet tubing into bottle. CH directs DH to operate pump to collect field blank sample. Ensure sample bottle is not over filled. CH seals bottle and seals inner bag. DH seals outer bag and places sample in cooler. Both CH and DH change gloves.

Sample Collection

- CH removes hose from Type 1 water bottle and places sample collection hose inlet back into sea.

- DH lowers hose to proper sample collection depth.

- CH handles filter assembly and filter outlet tubing. DH operates pump. Flush hose, tubing, and filter assembly with seawater for a minimum of one minute. Ensure discharge is overboard and down current.

- After flush, DH turns pump off.

- DH opens bag containing sample collection bottle.

- CH opens inner bag and removes bottle top.

- CH places filter outlet tubing into collection bottle and directs DH to operate pump to collect sample. Ensure sample bottle is not over filled. CH seals bottle and seals inner bag. DH seals outer bag and places sample in cooler. Both CH and DH change gloves.

- CH sampler hold tubing while the DH sample holds the bottles for the field measurements and remaining parameters. DH takes field measurements, records results and, discards the field sample. DH sampler then changes gloves.

- CH sampler removes sample collection tubing from the sea, disconnects from the pump tubing and places the tubing in the inner bag. DH sampler seals outer bag and secures remaining equipment for change of location.

- CH sampler and DH sampler remove and discard gloves. All new gloves will be required for each sampling site. New tyvek may be required at the discretion of the Clean Sampling Coordinator based on contact with metal items on the boat.

- The GPS operator will determine coordinates of sample site prior to moving to the next location.

Sample Documentation

- All observation and notes are to be recorded in field log book.

- A Chain of Custody (COC) is to be completed. All samples collected are to be recorded in COC upon sampling. Minimum required information must include:

  - Unique identification number
  - Sample description
  - Sample Type
  - Name of person(s) who collected sample
  - Date and time sample collected
  - Preservation (either added, or present)
  - Person responsible for custody of sample
  - Additional information as needed to document traceability ample
  - Ensure samples remain "in custody"

3.0 CONVENTIONAL SAMPLING PROGRAM

The conventional metals sampling vessel (supplied by Caribtec) will be used to collect 22 primary samples using the normal sampling protocol from the following points:

- RW-01 through RW-10 (Background Stations)
- SP#1, SP#2, SP#3, SP#8, SP#9, SP#10, SP#11, and SP#12 (Navy sampling locations)
- One point east of Punte del Este
- One point on the west side of the mouth of Bahia Salina del Sur
- One point north of Isabel Segunda
- One point south of Esperanza

Figure 1 shows the locations of these sampling points.

Analysis will be for the parameters listed on the Navy's NPDES permit for the AFWTF range by the methods specified on Table 1 (see columns pertaining to Caribtec and STL-Savannah). All samples will be properly containerized and preserved as shown on Table 2 (extra volume has been accounted for to compensate for the more difficult sea water matrix). Appropriate field QC

samples will be taken as required for the Puerto Rico Environmental Quality Board. See Table 4 for complete sampling matrix, including field QA/QC sample requirements.

Conventional samples will be collected at mid-depth (the same as the "clean" sampling); depth to bottom at each location will be estimated and recorded. The GPS operator stationed on this vessel will determine the sampling coordinates for each of the 22 locations. Conventional samples should be collected following the collection of the corresponding "clean" sample so as not to contaminate the area. All sampling procedures are to be consistent with those employed on previous sampling events.

Caribtec will be responsible for collecting enough sample volume for each of the two conventional laboratories and packaging the splits for shipment to the U.S. conventional metals analysis laboratory (STL-Savannah).

Field blanks, primary samples, and duplicates will be collected in accordance with Caribtec's normal operating procedures, which comply with PREQB requirements. Laboratory QA/QC shall be in accordance with all appropriate EPA and PREQB guidance.

TABLES

TABLE 1
ANALYTICAL METHODS
AFWTF PRE-EXERCISE SAMPLING
VIEQUES ISLAND, PUERTO RICO

Analyte	Target Quantitation Limit (ug/l)	Batelle Methods [a]	Columbia Methods [a]	Caribtec Methods [b]	STL-Savannah Methods
Inorganics (Total & Dissolved):					
Arsenic	1.4	1640	RP/200.8[c]	206.2	200.7, 200.9
Barium	1000	1638	200.7	208.1	200.7
Boron	4800	1638	200.7	200.7	200.7
Cadmium	5.0	1640	RP/200.8	213.1	200.7
Hex. Chromium	50	1636	7196	218.4	200.7
Total Chromium	300	1640	200.7	218.1	200.7
Copper	2.9	1640	RP/200.8	220.1	200.7, 200.9
Iron	200	1638	200.7	236.1	200.7
Lead	8.5	1640	RP/200.8	239.1	200.7
Manganese	100	1640	200.7	243.1	200.7
Mercury	0.15	1631	1631	245.2	245.1
Selenium	10	1640	1639	270.2	200.7
Silver	2.0	1638	RP/200.8	272.1	200.7, 200.9
Zinc	50	1640	200.7	200.7	200.7
Other:					
pH	NA	NA	NA	150.1	150.1
Temperature	NA	NA	NA	170.1	NA
Dissolved Oxygen	NA	NA	NA	638	NA
Turbidity	NA	NA	NA	180.1	180.1
Color	NA	110.2	110.2	110.1	110.2
Nitrate-Nitrite (as N)	5000	353.2	353.2	353.1	353.2
Ammonia	5000	350.1/350.3	350.1	350.1	350.1
Oil and Grease	15000	413.1/9070	413.1	413.1	1664
Fluorides	1300	340.2	340.2	340.1	340.2
Sulfide	2	376.1/9030	376.2	376.1	376.2
Phenolics	10	420.1/9065	420.1	420.1	420.1
Cyanide	1.0	335.2	335.2	335.2	335.3

Notes:

[a] = Sample preparation to address salinity shall be matrix modification (chelators) or ion exchange, as agreed upon by Battelle and Columbia.
[b] = Quantitation limits may be waived for Caribtec – methods should coincide with those used in the past.
[c] = RP methods use "reductive precipitation" which is an alternative chemical separation technique for ICP-MS.
NA = Not Applicable.

TABLE 2
GENERAL SAMPLING REQUIREMENTS AND HOLDING TIMES
AFWTF PRE-EXERCISE SAMPLING
VIEQUES ISLAND, PUERTO RICO

Analyte	Container Volume	Container Type	Sample Preservation	Holding Time
Metals 1 (Total and Dissolved): Arsenic Barium Boron Cadmium Chromium, Total Copper Iron Lead Manganese Mercury Selenium Silver	1 L	Teflon For Clean LDPE for Conventional	Nitric Acid to pH<2 4 C	6 months
Metals 2 (Total and Dissolved): Arsenic Selenium	1 L	LDPE	4 C	6 months
Metals 3 (Total and Dissolved): Hex. Chromium	125 mL	HDPE	4 C NaOH to pH>12	30 days
Cyanide	500 mL	LDPE	4 C NaOH to pH>12 Ascorbic acid	14 days
Nitrate-Nitrite (as N)	250 mL	HDPE	4 C H2SO4 to pH<2	48 hours
Oil and Grease	1 L	Glass	4 C HCl to pH<2	28 days
Fluorides	500 mL	HDPE	None	28 days
Sulfide	1 L	HDPE	4 C NaOH to pH>12 4 drops 2N Zinc Acetate	7 days
Phenolics	500 mL	Glass	4 C 0.5g CuSO4 H3PO4 to pH < 4-5	28 days
Color	500 mL	HDPE	4 C	48 hours
Turbidity pH Temperature Dissolved Oxygen	250 mL	HDPE	None – Field Analyze	Immediately

Table 3
SUMMARY OF CLEAN METALS SAMPLE ANALYTICAL REQUIREMENTS
AFWTF VIEQUES ISLAND, PUERTO RICO

	Sampling											
	Batelle						Columbia					
Description	Equipment Blanks	Field Blanks	Primary Samples	Duplicate Samples	Blind Control Sample	Total Number of Analyses	Equipment Blanks	Field Blanks	Primary Samples	Duplicate Samples	Blind Control Sample	Total Number of Analyses
Metals (Total Fraction)												
Arsenic	1	5	22	3	1	32	1	5	22	3	1	32
Barium	1	5	22	3	1	32	1	5	22	3	1	32
Boron	1	5	22	3	1	32	1	5	22	3	1	32
Cadmium	1	5	22	3	1	32	1	5	22	3	1	32
Hexavalent Chromum	1	5	22	3	1	32	1	5	22	3	1	32
Total Chromium	1	5	22	3	1	32	1	5	22	3	1	32
Copper	1	5	22	3	1	32	1	5	22	3	1	32
Iron	1	5	22	3	1	32	1	5	22	3	1	32
Lead	1	5	22	3	1	32	1	5	22	3	1	32
Manganese	1	5	22	3	1	32	1	5	22	3	1	32
Mercury	1	5	22	3	1	32	1	5	22	3	1	32
Selenium	1	5	22	3	1	32	1	5	22	3	1	32
Silver	1	5	22	3	1	32	1	5	22	3	1	32
Zinc	1	5	22	3	1	32	1	5	22	3	1	32
Metals (Dissolved Fraction)												
Arsenic	1	5	22	3	1	32	1	5	22	3	1	32
Barium	1	5	22	3	1	32	1	5	22	3	1	32
Boron	1	5	22	3	1	32	1	5	22	3	1	32
Cadmium	1	5	22	3	1	32	1	5	22	3	1	32
Hexavalent Chromum	1	5	22	3	1	32	1	5	22	3	1	32
Total Chromium	1	5	22	3		31	1	5	22	3	1	32
Copper	1	5	22	3	1	32	1	5	22	3	1	32
Iron	1	5	22	3	1	32	1	5	22	3	1	32
Lead	1	5	22	3	1	32	1	5	22	3	1	32
Manganese	1	5	22	3	1	32	1	5	22	3	1	32
Mercury	1	5	22	3	1	32	1	5	22	3	1	32
Selenium	1	5	22	3	1	32	1	5	22	3	1	32
Silver	1	5	22	3	1	32	1	5	22	3	1	32
Zinc	1	5	22	3	1	32	1	5	22	3	1	32
Other Analyses												
Dissolved Oxygen	---	---	---	---	---	0	---	---	---	---	---	0
pH [a]	---	---	---	---	---	0	---	---	---	---	---	0
Temperature[a]	---	---	---	---	---	0	---	---	---	---	---	0
Turbidity	---	---	---	---	---	0	---	---	---	---	---	0
Color	1	1	22	3	1	28	1	1	22	3	1	28
Nitrogen	1	5	22	3	1	32	1	5	22	3	1	32
Oil and Grease	1	5	22	3	1	32	1	5	22	3	1	32
Fluorides	1	5	22	3	1	32	1	5	22	3	1	32
Sulfide	1	5	22	3	1	32	1	5	22	3	1	32
Phenolics	1	5	22	3	1	32	1	5	22	3	1	32
Cyanide	1	5	22	3	1	32	1	5	22	3	1	32

54 total samples

Table 4
SUMMARY OF CONVENTIONAL METALS SAMPLE ANALYTICAL REQUIREMENTS
AFWTF VIEQUES ISLAND, PUERTO RICO

Description	Sampling											
	CARIBTEC						SAVANAH					
	Equipment Blanks	Field Blanks	Primary Samples	Duplicate Samples	Blind Control Sample	Total Number of Analyses	Equipment Blanks	Field Blanks	Primary Samples	Duplicate Samples	Blind Control Sample	Total Number of Analyses
Metals (Total Fraction)												
Arsenic	0	2	22	2	1	27	0	2	22	2	1	27
Barium	0	2	22	2	1	27	0	2	22	2	1	27
Boron	0	2	22	2	1	27	0	2	22	2	1	27
Cadmium	0	2	22	2	1	27	0	2	22	2	1	27
Hexavalent Chromum	0	2	22	2	1	27	0	2	22	2	1	27
Total Chromium	0	2	22	2	1	27	0	2	22	2	1	27
Copper	0	2	22	2	1	27	0	2	22	2	1	27
Iron	0	2	22	2	1	27	0	2	22	2	1	27
Lead	0	2	22	2	1	27	0	2	22	2	1	27
Manganese	0	2	22	2	1	27	0	2	22	2	1	27
Mercury	0	2	22	2	1	27	0	2	22	2	1	27
Selenium	0	2	22	2	1	27	0	2	22	2	1	27
Silver	0	2	22	2	1	27	0	2	22	2	1	27
Zinc	0	2	22	2	1	27	0	2	22	2	1	27
Metals (Dissolved Fraction)												
Arsenic	0	2	22	2	1	27	0	2	22	2	1	27
Barium	0	2	22	2	1	27	0	2	22	2	1	27
Boron	0	2	22	2	1	27	0	2	22	2	1	27
Cadmium	0	2	22	2	1	27	0	2	22	2	1	27
Hexavalent Chromum	0	2	22	2	1	27	0	2	22	2	1	27
Total Chromium	0	2	22	2		26	0	2	22	2	1	27
Copper	0	2	22	2	1	27	0	2	22	2	1	27
Iron	0	2	22	2	1	27	0	2	22	2	1	27
Lead	0	2	22	2	1	27	0	2	22	2	1	27
Manganese	0	2	22	2	1	27	0	2	22	2	1	27
Mercury	0	2	22	2	1	27	0	2	22	2	1	27
Selenium	0	2	22	2	1	27	0	2	22	2	1	27
Silver	0	2	22	2	1	27	0	2	22	2	1	27
Zinc	0	2	22	2	1	27	0	2	22	2	1	27
Other Analyses												
Dissolved Oxygen	---	2	22	2	---	26	0	2	22	2	---	26
pH [a]	---	2	22	2	---	26	0	2	22	2	---	26
Temperature [a]	---	2	22	2	---	26	0	2	22	2	---	26
Turbidity	---	2	22	2	---	26	0	2	22	2	---	26
Color	0	2	22	2	---	26	0	2	22	2	---	26
Nitrogen	0	2	22	2	1	27	0	2	22	2	1	27
Oil and Grease	0	2	22	2	1	27	0	2	22	2	1	27
Fluorides	0	2	22	2	1	27	0	2	22	2	1	27
Sulfide	0	2	22	2	1	27	0	2	22	2	1	27
Phenolics	0	2	22	2	1	27	0	2	22	2	1	27
Cyanide	0	2	22	2	1	27	0	2	22	2	1	27

54 total samples

FIGURES

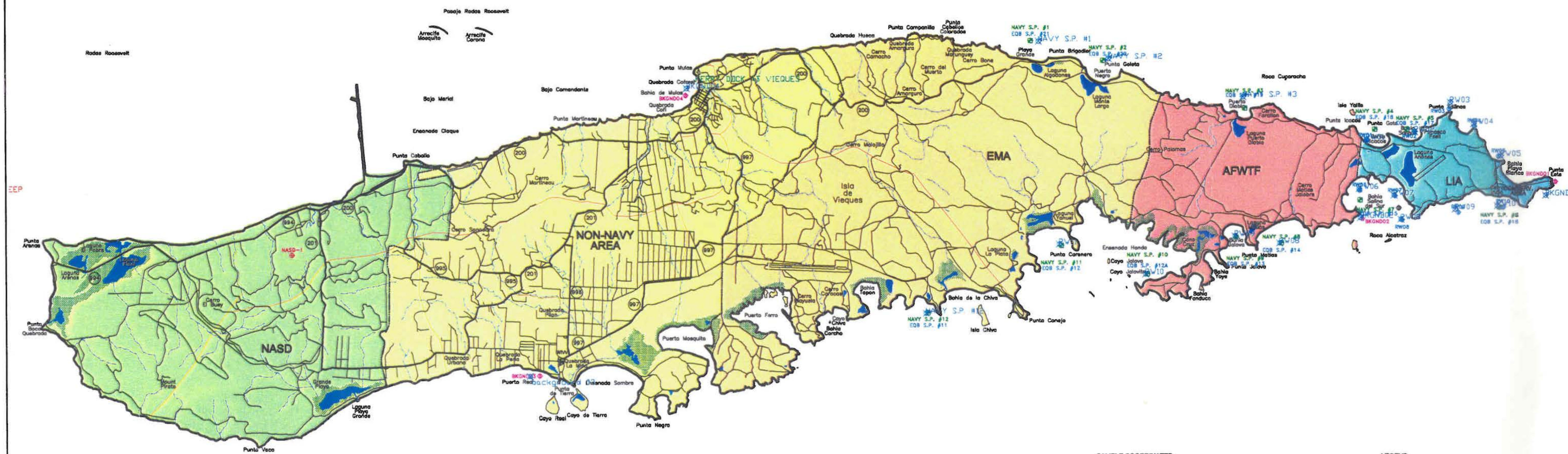

SAMPLE COORDINATES

SAMPLE ID	EASTING	NORTHING
NAVY S.P. #1	248757.85	2009669.17
NAVY S.P. #2	250322.18	2009240.45
NAVY S.P. #3	253423.96	2008199.71
NAVY S.P. #4	256250.87	2007739.24
NAVY S.P. #5	256949.66	2007739.24
NAVY S.P. #6	259003.15	2005942.48
NAVY S.P. #7	255922.14	2006204.47
NAVY S.P. #8	254209.00	2005274.85
NAVY S.P. #9	253224.35	2005401.88
NAVY S.P. #10	251270.92	2004607.96
NAVY S.P. #11	249400.45	2005227.05
NAVY S.P. #12	246507.55	2003764.77
RW01	256071.69	2007488.26
RW02	257111.68	2007698.73
RW03	257872.03	2008176.22
RW04	258417.84	2007807.42
RW05	258939.65	2007153.33
RW06	255913.12	2006413.88
RW07	256682.97	2006295.94
RW08	256831.97	2005774.53
RW09	258055.04	2005935.92
RW10	258949.05	2006047.65
BKGND01	260170.96	2006611.62
BKGND02	255974.37	2005801.62
BKGND03	238033.16	2002391.76
BKGND04	241247.03	2008480.49
DEPTH SPOT	258757.47	2006035.24

COORDS ARE IN UTM ZONE 20, NAD 83

LEGEND

- SHORELINE
- STATE ROUTE
- SECONDARY ROAD
- STREAM
- DISTRICTS
- MARSH
- NASD - NAVAL AMMUNITION SUPPLY DEPOT
- NON-NAVY OWNED LAND
- EMA - EASTERN MANEUVER AREA
- AFWTF - ATLANTIC FLEET WEAPONS TRAINING FACILITY
- LIA - LIVE IMPACT AREA
- CONSERVATION AREA

CWA/NPDES SAMPLE LEGEND

NAVY S.P. #4	NAVY SAMPLE LOCATION (JUNE 17, 1999)
EQB S.P. #18	EQB SAMPLE LOCATION (JUNE 17, 1999)
RW01	BACKGROUND SAMPLE LOCATION (JUNE 11, 1999)
BKGND01	PROPOSED BACKGROUND SAMPLE LOCATION
	PROPOSED DEPTH MEASUREMENT

NAVY NUMBERING IS CHRONOLOGICALLY. EQB HAD ALREADY NUMBERED THEIR LOCATIONS FOR SAMPLING.
SAMPLING LOCATIONS (S.P.) ARE AS FOLLOWS IN CHRONOLOGICAL ORDER: PLAYA GRANDE (1), PUERTO NEGRO (2), PUERTO DIABLO (3), BAHIA ICACOS (4), BAHIA SALINAS ([illegible]), SHORE LINE SOUTH OF CERRO INDIO (6), BAHIA SALINAS DEL SUR (7), SOUTH EAST OF LAGUNA MATIAS (8), BAHIA JALOVA (9), ENSENADA HONDA WEST OF CAYO JALOVITA (10), ENSENADA HONDA WEST OF CAYO YANUEL (11), AND BETWEEN THE PENINSULA (LOCATED WEST OF BAHIA CHIVA) AND BAHIA TAPON (12).

0 400 1200 2000
1 CM = 400 M

REVISIONS			NORTH	VIEQUES ISLAND PUERTO RICO	CWA/NPDES SAMPLE LOCATION MAP	FIGURE
	DRAWN	GLS		BAKER ENVIRONMENTAL, Inc. Coraopolis, Pennsylvania	SCALE AS SHOWN	1
	REVIEWED	REB			DATE JUNE, 2000	
	S.O.#	28007-139-0000				
	CADD#	2139012V				

Baker

ATTACHMENT A
EPA METHOD 1669 "SAMPLING AMBIENT WATER FOR TRACE METALS AT EPA WATER QUALITY CRITERIA LEVELS"

United States
Environmental Protection
Agency

Office Of Water
(4303)

EPA 821-R-95-034
April 1995

EPA

Method 1669: Sampling Ambient Water For Trace Metals At EPA Water Quality Criteria Levels

PB95-219929

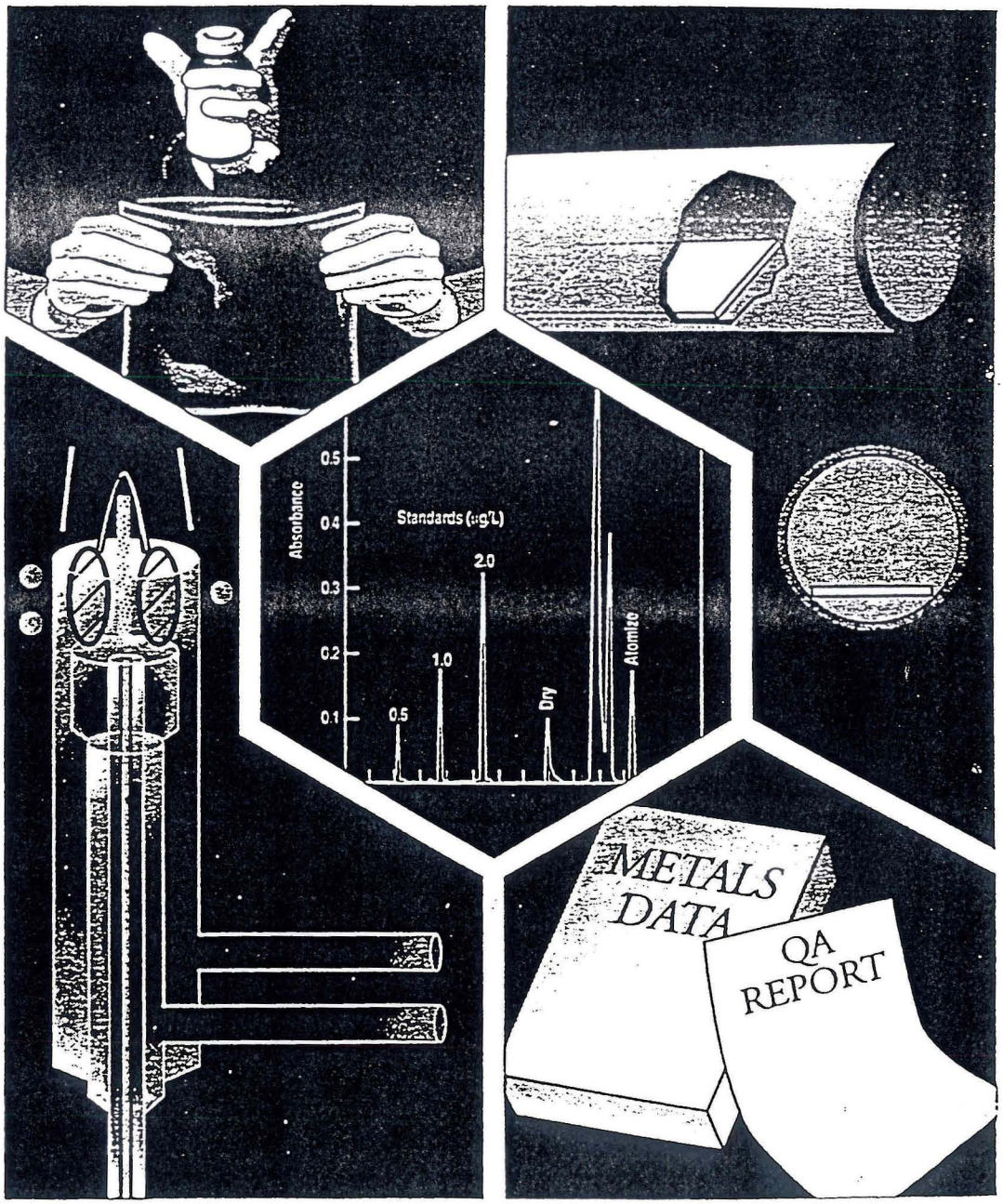

REPRODUCED BY: NTIS
U.S. Department of Commerce
National Technical Information Service
Springfield, Virginia 22161

Printed on Recycled Paper

BIBLIOGRAPHIC INFORMATION

PB95-219929

Report Nos:

Title: Method 1669: Sampling Ambient Water for Trace Metals at EPA Water Quality Criteria Levels.

Date: Apr 95

Performing Organization: DynCorp - EENSP, Alexandria, VA. Environmental Programs Div.

Performing Organization Report Nos: EPA/821/R-95/034

Sponsoring Organization: *Environmental Protection Agency, Washington, DC. Office of Water.

Contract Nos: EPA-68-C3-0337

NTIS Field/Group Codes: 68D (Water Pollution & Control), 99A (Analytical Chemistry)

Price: PC A03/MF A01

Availability: Available from the National Technical Information Service, Springfield, VA. 22161

Number of Pages: 43p

Keywords: *Water pollution detection, *Metals, *Trace amounts, *Water quality, *Test methods, Water pollution sampling, Criteria, Water analysis, Chemical analysis, Ground water, Surface waters, Potable water, Concentration(Composition), Procedures.

Abstract: The method is for the collection and filtration of ambient water samples for subsequent determination of total and dissolved metals at the levels listed. It is designed to support the implementation of water quality monitoring and permitting programs administered under the Clean Water Act. This method is applicable to the metals listed and other metals, metals species, and elements amenable to determination at trace levels. This method is not intended for determination of metals at concentrations normally found in treated and untreated discharges from industrial facilities. Existing regulations (40CFR Parts 400-500) typically limit concentrations in industrial discharges to the mid to high part-per-billion (ppb) range, whereas ambient metals concentrations are normally in the low part-per-trillion (ppt) to low ppb range.

PB95-219929

Method 1669: Sampling Ambient Water for Trace Metals at EPA Water Quality Criteria Levels

Acknowledgements

This sampling method was prepared under the direction of William A. Telliard of the Engineering and Analysis Division (EAD) within the U.S. Environmental Agency's (EPA's) Office of Science and Technology (OST). This sampling method was prepared under EPA Contract 68-C3-0337 by the DynCorp Environmental Programs Division, with assistance from Interface, Inc.

The following researchers contributed to the philosophy behind this sampling method. Their contribution is gratefully acknowledged:

Shier Berman, National Research Council, Ottawa, Ontario, Canada;
Nicholas Bloom, Frontier Geosciences Inc, Seattle, Washington;
Eric Crecelius, Battelle Marine Sciences Laboratory, Sequim, Washington;
Russell Flegal, University of California/Santa Cruz, California;
Gary Gill, Texas A&M University at Galveston, Texas;
Carlton Hunt and Dion Lewis, Battelle Ocean Sciences, Duxbury, Massachusetts;
Carl Watras, Wisconsin Department of Natural Resources, Boulder Junction, Wisconsin

Additional support was provided by Ted Martin of the EPA Office of Research and Development's Environmental Monitoring Systems Laboratory in Cincinnati, Ohio and by Arthur Horowitz of the U.S. Geological Survey.

This version of the method was prepared after observations of sampling teams from the University of California at Santa Cruz, the Wisconsin Department of Natural Resources, the U.S. Geological Survey, and Battelle Ocean Sciences. The assistance of personnel demonstrating the sampling techniques used by these institutions is gratefully acknowledged.

Disclaimer

This sampling method has been reviewed and approved for publication by the Analytical Methods Staff within the Engineering and Analysis Division of the U.S. Environmental Protection Agency. Mention of trade names or commercial products does not constitute endorsement or recommendation for use.

Further Information

For further information, contact:

W.A. Telliard
Engineering and Analysis Division (4303)
U.S. Environmental Protection Agency
401 M Street, SW
Washington, DC 20460
Phone: 202/260-7134
Fax: 202/260-7185

Introduction

This sampling method was designed to support water quality monitoring programs authorized under the Clean Water Act. Section 304(a) of the Clean Water Act requires EPA to publish water quality criteria that reflect the latest scientific knowledge concerning the physical fate (e.g., concentration and dispersal) of pollutants, the effects of pollutants on ecological and human health, and the effect of pollutants on biological community diversity, productivity, and stability.

Section 303 of the Clean Water Act requires states to set a water quality standard for each body of water within its boundaries. A state water quality standard consists of a designated use or uses of a waterbody or a segment of a waterbody, the water quality criteria that are necessary to protect the designated use or uses, and an antidegradation policy. These water quality standards serve two purposes: (1) they establish the water quality goals for a specific waterbody, and (2) they are the basis for establishing water quality-based treatment controls and strategies beyond the technology-based controls required by Sections 301(b) and 306 of the Clean Water Act.

In defining water quality standards, the state may utilize narrative criteria, numeric criteria, or both. However, the 1987 amendments to the Clean Water Act required states to adopt numeric criteria for toxic pollutants (designated in Section 307(a) of the Act) based on EPA Section 304(a) criteria or other scientific data, when the discharge or presence of those toxic pollutants could reasonably be expected to interfere with designated uses.

In some cases, these water quality criteria are as much as 280 times lower than those achievable using existing EPA methods and required to support technology-based permits. Therefore, this sampling method, and the analytical methods referenced in Table 1 of this document, were developed by EPA to specifically address state needs for measuring toxic metals at water quality criteria levels, when such measurements are necessary to protect designated uses in state water quality standards. The latest criteria published by EPA are those listed in the National Toxics Rule (57 *FR* 60848). This rule includes water quality criteria for 13 metals, and it is these criteria on which this sampling method and the referenced analytical methods are based.

In developing these methods, EPA found that one of the greatest difficulties in measuring pollutants at these levels was precluding sample contamination during collection, transport, and analysis. The degree of difficulty, however, is highly dependent on the metal and site-specific conditions. This method, therefore, is designed to provide the level of protection necessary to preclude contamination in nearly all situations. It is also designed to provide the procedures necessary to produce reliable results at the lowest possible water quality criteria published by EPA. In recognition of the variety of situations to which this method may be applied, and in recognition of continuing technological advances, the method is performance-based. Alternative procedures may be used, so long as those procedures are demonstrated to yield reliable results.

Requests for additional copies of this method should be directed to:

NCEPI
USEPA
11029 Kenwood Road
Cincinati, OH 45242
(513) 489-8190

Note: This document is intended as guidance only. Use of the terms "must," "may," and "should" are included to mean that EPA believes that these procedures must, may, or should be followed in order to produce the desired results when using this guidance. In addition, the guidance is intended to be performance-based, in that the use of less stringent procedures may be used so long as neither samples nor blanks are contaminated when following those modified procedures. Because the only way to measure the performance of the modified procedures is through the collection and analysis of uncontaminated blank samples in accordance with this guidance and the referenced methods, it is highly recommended that any modifications be thoroughly evaluated and demonstrated to be effective before field samples are collected.

Method 1669

Sampling Ambient Water for Determination of Metals at EPA Water Quality Criteria Levels

1.0 Scope and Application

1.1 This method is for the collection and filtration of ambient water samples for subsequent determination of total and dissolved metals at the levels listed in Table 1. It is designed to support the implementation of water quality monitoring and permitting programs administered under the Clean Water Act.

1.2 This method is applicable to the metals listed below and other metals, metals species, and elements amenable to determination at trace levels.

Analyte	Symbol	Chemical Abstract Services Registry Number (CASRN)
Antimony	(Sb)	7440-36-0
Arsenic	(As)	7440-38-2
Cadmium	(Cd)	7440-43-9
Chromium (III)	Cr^{+3}	16065-83-1
Chromium (IV)	Cr^{+6}	18540-29-9
Copper	(Cu)	7440-50-8
Lead	(Pb)	7439-92-1
Mercury	(Hg)	7439-97-6
Nickel	(Ni)	7440-02-0
Selenium	(Se)	7782-49-2
Silver	(Ag)	7440-22-4
Thallium	(Tl)	7440-28-0
Zinc	(Zn)	7440-66-6

1.3 This method is accompanied by the 1600 series methods listed in Table 1. These methods include the sample handling, analysis, and quality control procedures necessary for reliable determination of trace metals in aqueous samples.

1.4 This method is not intended for determination of metals at concentrations normally found in treated and untreated discharges from industrial facilities. Existing regulations (40 *CFR* Parts 400–500) typically limit concentrations in industrial discharges to the mid to high part-per-billion (ppb) range, whereas ambient metals concentrations are normally in the low part-per-trillion (ppt) to low ppb range. This guidance is therefore directed at the collection of samples

to be measured at or near the levels listed in Table 1. Actual concentration ranges to which this guidance is applicable will be dependent on the sample matrix, dilution levels, and other laboratory operating conditions.

1.5 The ease of contaminating ambient water samples with the metal(s) of interest and interfering substances cannot be overemphasized. This method includes sampling techniques that should maximize the ability of the sampling team to collect samples reliably and eliminate sample contamination. These techniques are given in Section 8.0 and are based on findings of researchers performing trace metals analyses (*References 14.1–14.9*).

1.6 Clean and ultraclean—The terms "clean" and "ultraclean" have been used in other Agency guidance to describe the techniques needed to reduce or eliminate contamination in trace metals determinations. These terms are not used in this sampling method due to a lack of exact definitions. However, the information provided in this method is consistent with summary guidance on clean and ultraclean techniques (*Reference 14.10*).

1.7 This sampling method follows the EPA Environmental Methods Management Council's "Format for Method Documentation" (*Reference 14.11*).

1.8 Method 1669 is "performance-based"; i.e., an alternate sampling procedure or technique may be used, so long as neither samples nor blanks are contaminated when following the alternate procedures. Because the only way to measure the performance of the alternate procedures is through the collection and analysis of uncontaminated blank samples in accordance with this guidance and the methods referenced in Table 1, it is highly recommended that any modifications be thoroughly evaluated and demonstrated to be effective before field samples are collected. Section 9.2 provides additional details on the tests and documentation required to support equivalent performance.

1.9 For dissolved metal determinations, samples must be filtered through a 0.45-µm capsule filter at the field site. The filtering procedures are described in this method. The filtered samples may be preserved in the field or transported to the laboratory for preservation. Procedures for field preservation are detailed in this sampling method; procedures for laboratory preservation are provided in the methods referenced in Table 1. Preservation requirements are summarized in Table 2.

1.10 The procedures in this method are for use only by personnel thoroughly trained in the collection of samples for determination of metals at ambient water quality control levels.

2.0 Summary of Method

2.1 Before samples are collected, all sampling equipment and sample containers are cleaned in a laboratory or cleaning facility using detergent, mineral acids, and reagent water as described in the methods referenced in Table 1. The laboratory or cleaning facility is responsible for generating an acceptable equipment blank to demonstrate that the sampling equipment and containers are free from trace metals contamination before they are shipped to the field sampling team. An acceptable blank is one that is free from contamination below the minimum level (ML) specified in the referenced analytical method (Section 9.3).

2.2 After cleaning, sample containers are filled with weak acid solution, individually double-bagged, and shipped to the sampling site. All sampling equipment is also bagged for storage or shipment. Note: EPA has found that, in some cases, it may be possible to empty the weak acid solution from the bottle immediately prior to transport to the field site. In this case, the bottle should be refilled with reagent water (Section 7.1).

2.3 The laboratory or cleaning facility must prepare a large carboy or other appropriate clean container filled with reagent water (Section 7.1) for use with collection of field blanks during sampling activities. The reagent-water-filled container should be shipped to the field site and handled as all other sample containers and sampling equipment. At least one field blank should be processed per site, or one per every ten samples, whichever is more frequent (Section 9.4). If samples are to be collected for determination of trivalent chromium, the sampling team processes additional QC aliquots are processed as described in Section 9.6.

2.4 Upon arrival at the sampling site, one member of the two- person sampling team is designated as "dirty hands"; the second member is designated as "clean hands." All operations involving contact with the sample bottle and transfer of the sample from the sample collection device to the sample bottle are handled by the individual designated as "clean hands." "Dirty hands" is responsible for preparation of the sampler (except the sample container itself), operation of any machinery, and for all other activities that do not involve direct contact with the sample.

2.5 All sampling equipment and sample containers used for metals determinations at or near the levels listed in Table 1 must be nonmetallic and free from any material that may contain metals.

2.6 Sampling personnel are required to wear clean, nontalc gloves at all times when handling sampling equipment and sample containers.

2.7 In addition to processing field blanks at each site, a field duplicate must be collected at each sampling site, or one field duplicate per every ten samples, whichever is more frequent (Section 9.5). Section 9 gives a complete description of quality control requirements.

2.8 Sampling

2.8.1 Whenever possible, samples are collected facing upstream and upwind to minimize introduction of contamination.

2.8.2 Samples may be collected while working from a boat or while on land.

2.8.3 Surface samples are collected using a grab sampling technique. The principle of the grab technique is to fill a sample bottle by rapid immersion in water and capping to minimize exposure to airborne particulate matter.

2.8.4 Subsurface samples are collected by suction of the sample into an immersed sample bottle or by pumping the sample to the surface.

2.9 Samples for dissolved metals are filtered through a 0.45-µm capsule filter at the field site. After filtering, the samples are double-bagged and iced immediately. Sample containers are

shipped to the analytical laboratory. The sampling equipment is shipped to the laboratory or cleaning facility for recleaning.

2.10 Acid preservation of samples is performed in the field or in the laboratory. Field preservation is necessary for determinations of trivalent chromium. It has also been shown that field preservation can increase sample holding times for hexavalent chromium to 30 days; therefore it is recommended that preservation of samples for hexavalent chromium be performed in the field. For other metals, however, the sampling team may prefer to utilize laboratory preservation of samples to expedite field operations and to minimize the potential for sample contamination.

2.11 Sampling activities must be documented through paper or computerized sample tracking systems.

3.0 Definitions

3.1 Apparatus—Throughout this method, the sample containers, sampling devices, instrumentation, and all other materials and devices used in sample collection, sample processing, and sample analysis activities will be referred to collectively as the Apparatus.

3.2 Definitions of other terms are given in the Glossary (Section 15) at the end of this method.

4.0 Contamination and Interferences

4.1 Contamination problems in trace metals analysis

4.1.1 Preventing ambient water samples from becoming contaminated during the sampling and analytical process is the greatest challenge faced in trace metals determinations. In recent years, it has been shown that much of the historical trace metals data collected in ambient water are erroneously high because the concentrations reflect contamination from sampling and analysis rather than ambient levels (*Reference 14.12*). Therefore, it is imperative that extreme care be taken to avoid contamination when collecting and analyzing ambient water samples for trace metals.

4.1.2 There are numerous routes by which samples may become contaminated. Potential sources of trace metals contamination during sampling include metallic or metal-containing sampling equipment, containers, labware (e.g. talc gloves that contain high levels of zinc), reagents, and deionized water; improperly cleaned and stored equipment, labware, and reagents; and atmospheric inputs such as dirt and dust from automobile exhaust, cigarette smoke, nearby roads, bridges, wires, and poles. Even human contact can be a source of trace metals contamination. For example, it has been demonstrated that dental work (e.g., mercury amalgam fillings) in the mouths of laboratory personnel can contaminate samples that are directly exposed to exhalation (*Reference 14.3*).

4.2 Contamination Control

4.2.1 Philosophy—The philosophy behind contamination control is to ensure that any object or substance that contacts the sample is nonmetallic and free from any material that may contain metals of concern.

4.2.1.1 The integrity of the results produced cannot be compromised by contamination of samples. Requirements and suggestions for controlling sample contamination are given in this sampling method and in the analytical methods referenced in Table 1.

4.2.1.2 Substances in a sample or in the surrounding environment cannot be allowed to contaminate the Apparatus used to collect samples for trace metals measurements. Requirements and suggestions for protecting the Apparatus are given in this sampling method and in the methods referenced in Table 1.

4.2.1.3 While contamination control is essential, personnel health and safety remain the highest priority. Requirements and suggestions for personnel safety are given in Section 5 of this sampling method and in the methods referenced in Table 1.

4.2.2 Avoiding contamination—The best way to control contamination is to completely avoid exposure of the sample and Apparatus to contamination in the first place. Avoiding exposure means performing operations in an area known to be free from contamination. Two of the most important factors in avoiding/reducing sample contamination are (1) an awareness of potential sources of contamination and (2) strict attention to work being performed. Therefore, it is imperative that the procedures described in this method be carried out by well trained, experienced personnel. Documentation of training should be kept on file and readily available for review.

4.2.2.1 Minimize exposure—The Apparatus that will contact samples or blanks should only be opened or exposed in a clean room, clean bench, glove box, or clean plastic bag, so that exposure to atmospheric inputs is minimized. When not being used, the Apparatus should be covered with clean plastic wrap, stored in the clean bench or in a plastic box or glove box, or bagged in clean, colorless zip-type bags. Minimizing the time between cleaning and use will also reduce contamination.

4.2.2.2 Wear gloves—Sampling personnel must wear clean, nontalc gloves (Section 6.7) during all operations involving handling of the Apparatus, samples, and blanks. Only clean gloves may touch the Apparatus. If another object or substance is touched, the glove(s) must be changed before again handling the Apparatus. If it is even suspected that gloves have become contaminated, work must be halted, the contaminated gloves removed, and a new pair of clean gloves put on. Wearing multiple layers of clean gloves will allow the old pair to be quickly stripped with minimal disruption to the work activity.

4.2.2.3 Use metal-free Apparatus—All Apparatus used for metals determinations at the levels listed in Table 1 must be nonmetallic and free of material that may

contain metals. When it is not possible to obtain equipment that is completely free of the metal(s) of interest, the sample should not come into direct contact with the equipment.

4.2.2.3.1 Construction materials—Only the following materials should come in contact with samples: fluoropolymer (FEP, PTFE), conventional or linear polyethylene, polycarbonate, polysulfone, polypropylene, or ultrapure quartz. PTFE is less desirable than FEP because the sintered material in PTFE may contain contaminants and is susceptible to serious memory effects (*Reference 14.6*). Fluoropolymer or glass containers should be used for samples that will be analyzed for mercury because mercury vapors can diffuse in or out of other materials, resulting either in contamination or low-biased results (*Reference 14.3*). Metal must not be used under any circumstance. Regardless of construction, all materials that will directly or indirectly contact the sample must be cleaned using the procedures described in the referenced analytical methods (see Table 1) and must be known to be clean and metal-free before proceeding.

4.2.2.3.2 The following materials have been found to contain trace metals and must not be used to hold liquids that come in contact with the sample or must not contact the sample, unless these materials have been shown to be free of the metals of interest at the desired level: Pyrex, Kimax, methacrylate, polyvinylchloride, nylon, and Vycor (*Reference 14.6*). In addition, highly colored plastics, paper cap liners, pigments used to mark increments on plastics, and rubber all contain trace levels of metals and must be avoided (*Reference 14.13*).

4.2.2.3.3 Serialization—Serial numbers should be indelibly marked or etched on each piece of Apparatus so that contamination can be traced, and logbooks should be maintained to track the sample from the container through the sampling process to shipment to the laboratory. Chain-of-custody procedures may also be used if warranted so that contamination can be traced to particular handling procedures or lab personnel.

4.2.2.3.4 The Apparatus should be clean when the sampling team receives it. If there are any indications that the Apparatus is not clean (e.g., a ripped storage bag), an assessment of the likelihood of contamination must be made. Sampling must not proceed if it is possible that the Apparatus is contaminated. If the Apparatus is contaminated, it must be returned to the laboratory or cleaning facility for proper cleaning before any sampling activity resumes.

4.2.2.3.5 Details for recleaning the Apparatus between collection of individual samples are provided in Section 10.

4.2.2.4 Avoid sources of contamination—Avoid contamination by being aware of potential sources and routes of contamination.

4.2.2.4.1 Contamination by carryover—Contamination may occur when a sample containing low concentrations of metals is processed immediately after a sample containing relatively high concentrations of these metals. At sites where more than one sample will be collected, the sample known or expected to contain the lowest concentration of metals should be collected first with the sample containing the highest levels collected last (Section 8.1.4). This will help minimize carryover of metals from high- concentration samples to low- concentration samples. If the sampling team does not have prior knowledge of the waterbody, or when necessary, the sample collection system should be rinsed with dilute acid and reagent water between samples and followed by collection of a field blank (Section 10.3).

4.2.2.4.2 Contamination by samples—Significant contamination of the Apparatus may result when untreated effluents, in-process waters, landfill leachates, and other samples containing mid- to high-level concentrations of inorganic substances are processed. As stated in Section 1, this sampling method is not intended for application to these samples, and samples containing high concentrations of metals must not be collected, processed, or shipped at the same time as samples being collected for trace metals determinations.

4.2.2.4.3 Contamination by indirect contact—Apparatus that may not directly contact samples may still be a source of contamination. For example, clean tubing placed in a dirty plastic bag may pick up contamination from the bag and subsequently transfer the contamination to the sample. Therefore, it is imperative that every piece of the Apparatus that is directly or indirectly used in the collection of ambient water samples be cleaned as specified in the analytical method(s) referenced in Table 1.

4.2.2.4.4 Contamination by airborne particulate matter—Less obvious substances capable of contaminating samples include airborne particles. Samples may be contaminated by airborne dust, dirt, particulate matter, or vapors from automobile exhaust; cigarette smoke; nearby corroded or rusted bridges, pipes, poles, or wires; nearby roads; and even human breath (Section 4.1.2). Whenever possible, the sampling activity should occur as far as possible from sources of airborne contamination (Section

8.1.3). Areas where nearby soil is bare and subject to wind erosion should be avoided.

4.3 Interferences—Interferences resulting from samples will vary considerably from source to source, depending on the diversity of the site being sampled. If a sample is suspected of containing substances that may interfere in the determination of trace metals, sufficient sample should be collected to allow the laboratory to identify and overcome interference problems.

5.0 Safety

5.1 The toxicity or carcinogenicity of the chemicals used in this method has not been precisely determined; however, these chemicals should be treated as a potential health hazard. Exposure should be reduced to the lowest possible level. Sampling teams are responsible for maintaining a current awareness file of OSHA regulations for the safe handling of the chemicals specified in this method. A reference file of Material Safety Data Sheets should also be made available to all personnel involved in sampling. It is also suggested that the organization responsible perform personal hygiene monitoring of each sampling team member who uses this method and that the results of this monitoring be made available to the member.

5.2 Operating in and around waterbodies carries the inherent risk of drowning. Life jackets must be worn when operating from a boat, when sampling in more than a few feet of water, or when sampling in swift currents.

5.3 Collecting samples in cold weather, especially around cold water bodies, carries the risk of hypothermia, and collecting samples in extremely hot and humid weather carries the risk of dehydration and heat stroke. Sampling team members should wear adequate clothing for protection in cold weather and should carry an adequate supply of water or other liquids for protection against dehydration in hot weather.

6.0 Apparatus and Materials

Note: Brand names, suppliers, and part numbers are for illustration only and no endorsement is implied. Equivalent performance may be achieved using apparatus and materials other than those specified here. Meeting the performance requirements of this method is the responsibility of the sampling team and laboratory.

6.1 All sampling equipment and sample containers must be precleaned in a laboratory or cleaning facility, as described in the methods referenced in Table 1, before they are shipped to the field site. Performance criteria for equipment cleaning is described in the referenced methods. To minimize difficulties in sampling, the equipment should be packaged and arranged to minimize field preparation.

6.2 Materials such as gloves (Section 6.7), storage bags (Section 6.8), and plastic wrap (Section 6.9), may be used new without additional cleaning unless the results of the equipment blank

pinpoint any of these materials as a source of contamination. In this case, either a different supplier must be obtained or the materials must be cleaned.

6.3 Sample bottles—Fluoropolymer (FEP, PTFE), conventional or linear polyethylene, polycarbonate, or polypropylene; 500-mL or 1-L with lids. If mercury is a target analyte, fluoropolymer or glass bottles should be used. Refer to the methods referenced in Table 1 for bottle cleaning procedures.

6.3.1 Cleaned sample bottles should be filled with 0.1% HCl (v/v). In some cases, it may be possible to empty the weak acid solution from the sample bottle immediately prior to transport to the field site. In this case, the bottle should be refilled with reagent water (Section 7.1).

6.3.2 Whenever possible, sampling devices should be cleaned and prepared for field use in a class 100 clean room. Preparation of the devices in the field should be done within the glove bag (Section 6.6). Regardless of design, sampling devices must be constructed of nonmetallic material (Section 4.2.2.3.1) and free from material that contains metals. Fluoropolymer or other material shown not to adsorb or contribute mercury must be used if mercury is a target analyte; otherwise, polyethylene, polycarbonate, or polypropylene are acceptable. Commercially available sampling devices may be used provided that any metallic or metal-containing parts are replaced with parts constructed of nonmetallic material.

6.4 Surface sampling devices—Surface samples are collected using a grab sampling technique. Samples may be collected manually by direct submersion of the bottle into the water or by using a grab sampling device. Examples of grab samplers are shown in Figures 1 and 2 and may be used at sites where depth profiling is neither practical nor necessary.

6.4.1 The grab sampler in Figure 1 consists of a heavy fluoropolymer collar fastened to the end of a 2-m-long polyethylene pole, which serves to remove the sampling personnel from the immediate vicinity of the sampling point. The collar holds the sample bottle. A fluoropolymer closing mechanism, threaded onto the bottle, enables the sampler to open and close the bottle under water, thereby avoiding surface microlayer contamination (*Reference 14.14*). Polyethylene, polycarbonate, and polypropylene are also acceptable construction materials unless mercury is a target analyte. Assembly of the cleaned sampling device is as follows (refer to Figure 1):

6.4.1.1 Thread the pull cord (with the closing mechanism attached) through the guides and secure the pull ring with a simple knot. Screw a sample bottle onto the closing device and insert the bottle into the collar. Cock the closing plate so that the plate is pushed away from the operator.

6.4.1.2 The cleaned and assembled sampling device should be stored in a double layer of large, clean zip-type polyethylene bags or wrapped in two layers of clean polyethylene wrap if it will not be used immediately.

6.4.2 An alternate grab sampler design is shown in Figure 2. This grab sampler is used for discrete water samples and is constructed so that a capped clean bottle can be submerged, the cap removed, sample collected, and bottle recapped at a selected depth.

This device eliminates sample contact with conventional samplers (e.g., Niskin bottles), thereby reducing the risk of extraneous contamination. Because a fresh bottle is used for each sample, carryover from previous samples is eliminated (*Reference 14.15*).

6.5 Subsurface sampling devices—Subsurface sample collection may be appropriate in lakes and sluggish deep river environments or where depth profiling is determined to be necessary. Subsurface samples are collected by pumping the sample into a sample bottle. Examples of subsurface collection systems include the the jar system device shown in Figure 3 and described in Section 6.5.1 or the continuous-flow apparatus shown in Figure 4 and described in Section 6.5.2.

6.5.1 Jar sampler (*Reference 14.14*)—The jar sampler (Figure 3) is comprised of a heavy fluoropolymer 1-L jar with a fluoropolymer lid equipped with two 1/4-in. fluoropolymer fittings. Sample enters the jar through a short length of fluoropolymer tubing inserted into one fitting. Sample is pulled into the jar by pumping on fluoropolymer tubing attached to the other fitting. A thick fluoropolymer plate supports the jar and provides attachment points for a fluoropolymer safety line and fluoropolymer torpedo counterweight.

6.5.1.1 Advantages of the jar sampler for depth sampling are (1) all wetted surfaces are fluoropolymer and can be rigorously cleaned; (2) the sample is collected into a sample jar from which the sample is readily recovered, and the jar can be easily recleaned; (3) the suction device (a peristaltic or rotary vacuum pump, Section 6.15) is located in the boat, isolated from the sampling jar; (4) the sampling jar can be continuously flushed with sample, at sampling depth, to equilibrate the system; and (5) the sample does not travel through long lengths of tubing that are more difficult to clean and keep clean (*Reference 14.14*). In addition, the device is designed to eliminate atmospheric contact with the sample during collection.

6.5.1.2 To assemble the cleaned jar sampler, screw the torpedo weight onto the machined bolt attached to the support plate of the jar sampler. Attach a section of the 1/4-in. o.d. tubing to the jar by inserting the tubing into the fitting on the lid and pushing down into the jar until approximately 8 cm from the bottom. Tighten the fitting nut securely. Attach the solid safety line to the jar sampler using a bowline knot to the loop affixed to the support plate.

6.5.1.3 For the tubing connecting the pump to the sampler, tubing lengths of up to 12 m have been used successfully (*Reference 14.14*).

6.5.2 Continuous-flow sampler (*References 14.16–14.17*)—This sampling system, shown in Figure 4, consists of a peristaltic or submersible pump and one or more lengths of precleaned fluoropolymer or styrene/ethylene/butylene/ silicone (SEBS) tubing. A filter is added to the sampling train when sampling for dissolved metals.

6.5.2.1 Advantages of this sampling system include (1) all wetted surfaces are fluoropolymer or SEBS and can be readily cleaned; (2) the suction device is located in the boat, isolated from the sample bottle; (3) the sample does not travel through long lengths of tubing that are difficult to clean and keep clean;

and (4) in-line filtration is possible, minimizing field handling requirements for dissolved metals samples

6.5.2.2 The sampling team assembles the system in the field as described in Section 8.2.8. System components include an optional polyethylene pole to remove sampling personnel from the immediate vicinity of the sampling point and the pump, tubing, filter, and filter holder listed in Sections 6.14 and 6.15.

6.6 Field-portable glove bag—I2R, Model R-37-37H (nontalc), or equivalent. Alternately, a portable glove box may be constructed with a nonmetallic (PVC pipe or other suitable material) frame and a frame cover made of an inexpensive, disposable, nonmetallic material (e.g., a thin-walled polyethylene bag) (*Reference 14.7*).

6.7 Gloves—clean, nontalc polyethylene, latex, vinyl, or PVC; various lengths. Shoulder-length gloves are needed if samples are to be collected by direct submersion of the sample bottle into the water or when sampling for mercury.

6.7.1 Gloves, shoulder-length polyethylene—Associated Bag Co., Milwaukee, WI, 66-3-301, or equivalent.

6.7.2 Gloves, PVC—Fisher Scientific Part No. 11-394-100B, or equivalent.

6.8 Storage bags—clean, zip-type, nonvented, colorless polyethylene (various sizes).

6.9 Plastic wrap—clean, colorless polyethylene.

6.10 Cooler—clean, nonmetallic, with white interior for shipping samples.

6.11 Ice or chemical refrigerant packs—to keep samples chilled in the cooler during shipment.

6.12 Wind suit—Pamida, or equivalent. Note: This equipment is necessary only for collection of metals, such as mercury, that are known to have elevated atmospheric concentrations.

6.12.1 An unlined, long-sleeved wind suit consisting of pants and jacket and constructed of nylon or other synthetic fiber is worn when sampling for mercury to prevent mercury adsorbed onto cotton or other clothing materials from contaminating samples.

6.12.2 Washing and drying—The wind suit is washed by itself or with other wind suits only in a home or commercial washing machine and dried in a clothes dryer. The clothes dryer must be thoroughly vacuumed, including the lint filter, to remove all traces of lint before drying. After drying, the wind suit is folded and stored in a clean polyethylene bag for shipment to the sample site.

6.13 Boat

6.13.1 For most situations (e.g., most metals under most conditions), the use of an existing, available boat is acceptable. A flat-bottom, Boston Whaler-type boat is preferred because sampling materials can be stored with reduced chance of tipping.

6.13.1.1 Immediately before use, the boat should be washed with water from the sampling site away from any sampling points to remove any dust or dirt accumulation.

6.13.1.2 Samples should be collected upstream of boat movement.

6.13.2 For mercury, and for situations in which the presence of contaminants cannot otherwise be controlled below detectable levels, the following equipment and precautions may be necessary:

6.13.2.1 A metal-free (e.g., fiberglass) boat, along with wooden or fiberglass oars. Gasoline- or diesel-fueled boat motors should be avoided when possible because the exhaust can be a source of contamination. If the body of water is large enough to require use of a boat motor, the engine should be shut off at a distance far enough from the sampling point to avoid contamination, and the sampling team should manually propel the boat to the sampling point. Samples should be collected upstream of boat movement.

6.13.2.2 Before first use, the boat should be cleaned and stored in an area that minimizes exposure to dust and atmospheric particles. For example, cleaned boats should not be stored in an area that would allow exposure to automobile exhaust or industrial pollution.

6.13.2.3 The boat should be frequently visually inspected for possible contamination.

6.13.2.4 After sampling, the boat should be returned to the laboratory or cleaning facility, cleaned as necessary, and stored away from any sources of contamination until next use.

6.14 Filtration Apparatus—Required when collecting samples for dissolved metals determinations.

6.14.1 Filter—0.45-µm, 15-mm diameter or larger, tortuous-path capsule filters (*Reference 14.18*), Gelman Supor 12175, or equivalent.

6.14.2 Filter holder for mounting filter to the gunwale of the boat—Rod or pipe made from plastic material and mounted with plastic clamps. Note: A filter holder may not be required if one or a few samples are to be collected. For these cases, it may only be necessary to attach the filter to the outlet of the tubing connected to the pump.

6.15 Pump and pump apparatus—Required for use with the jar sampling system (Section 6.5.1) or the continuous-flow system (Section 6.5.2). Peristaltic pump—115-V a.c., 12-V d.c., internal battery, variable-speed, single-head, Cole-Parmer, portable, "Masterflex L/S," Catalog No. H-07570-10 drive with Quick Load pump head, Catalog No. H-07021-24, or equivalent. (Note: Equivalent pumps may include rotary vacuum, submersible, or other pumps free from metals and suitable to meet the site-specific depth sampling needs.)

6.15.1 Cleaning—Peristaltic pump modules do not require cleaning. However, nearly all peristaltic pumps contain a metal head and metal controls. Touching the head or controls necessitates changing of gloves before touching the Apparatus. If a submersible pump is used, a large volume of sample should be pumped to clean the stainless steel shaft (hidden behind the impeller) that comes in contact with the sample. Pumps with metal impellers should not be used.

6.15.2 Tubing for use with peristaltic pump—SEBS resin, approximately 3/8-in. i.d. by approximately 3 ft, Cole-Parmer size 18, Cat. No. G-06464-18, or approximately 1/4-in. i.d., Cole-Parmer size 17, Catalog No. G-06464-17, or equivalent. Tubing is cleaned by soaking in 5–10% HCl solution for 8–24 h, rinsing with reagent water in a clean bench in a clean room, and drying in the clean bench by purging with mercury-free air or nitrogen. After drying, the tubing is double-bagged in clear polyethylene bags, serialized with a unique number, and stored until use.

6.15.3 Tubing for connection to peristaltic pump tubing—fluoropolymer, 3/8- or 1/4-in. o.d., in lengths as required to reach the point of sampling. If sampling will be at some depth from the end of a boom extended from a boat, sufficient tubing to extend to the end of the boom and to the depth will be required. Cleaning of the fluoropolymer can be the same as cleaning the tubing for the rotary vacuum pump (Section 6.15.1.2). If necessary, more agressive cleaning (e.g., concentrated nitric acid) may be used.

6.15.4 Batteries to operate submersible pump—12-V, 2.6- amp, gel cell, YUASA NP2.6-12, or equivalent. A 2-amp fuse connected at the positive battery terminal is strongly recommended to prevent short circuits from overheating the battery. A 12-V, lead-acid automobile or marine battery may be more suitable for extensive pumping.

6.15.5 Tubing connectors—appropriately sized PVC, clear polyethylene, or fluoropolymer "barbed" straight connectors cleaned as the tubing above. Used to connect multiple lengths of tubing.

6.16 Carboy for collection and storage of dilute waste acids used to store bottles.

6.17 Apparatus for field preservation of aliquots for trivalent chromium determinations

6.17.1 Fluoropolymer forceps,, 1-L fluoropolymer jar, and 30-mL fluoropolymer vials with screw-caps (1 vial per sample and blank). It is recommended that 1 mL of ultrapure nitric acid (Section 7.3) be added to each vial prior to transport to the field to simplify field handling activities (See Section 8.4.4.6).

6.17.2 Filters—0.4-µm, 47-mm polycarbonate Nucleopore (or equivalent). Filters are cleaned as follows. Fill a 1-L fluoropolymer jar approximately two-thirds full with 1-N nitric acid. Using fluoropolymer forceps, place individual filters in the fluoropolymer jar. Allow the filters to soak for 48 h. Discard the acid, and rinse five times with reagent water. Fill the jar with reagent water, and soak the filters for 24 h. Remove the filters when ready for use, and using fluoropolymer forceps, place them on the filter apparatus (Section 6.17.3).

6.17.3 Vacuum filtration apparatus—Millipore 47-mm size, or equivalent, vacuum pump and power source (and extension cords, if necessary) to operate the pump.

6.17.4 Eppendorf auto pipet and colorless pipet tips (100–1000 µL)

6.17.5 Wrist-action shaker—Burrel or equivalent.

6.17.6 Fluoropolymer wash bottles—one filled with reagent water (Section 7.1) and one filled with high- purity 10% HCl (Section 7.4.4), for use in rinsing forceps and pipet tips.

7.0 Reagents and Standards

7.1 Reagent water—water in which the analytes of interest and potentially interfering substances are not detected at the Method Detection Limit (MDL) of the analytical method used for analysis of samples. Prepared by distillation, deionization, reverse osmosis, anodic/cathodic stripping voltammetry, or other techniques that remove the metal(s) and potential interferent(s). A large carboy or other appropriate container filled with reagent water must be available for the collection of field blanks.

7.2 Nitric acid, dilute, trace-metal grade—Shipped with sampling kit for cleaning equipment between samples.

7.3 Sodium hydroxide—Concentrated, 50% solution for use when field-preserving samples for hexavalent chromium determinations (Section 8.4.5).

7.4 Reagents for field-processing aliquots for trivalent chromium determinations

7.4.1 Nitric acid, ultrapure—For use when field-preserving samples for trivalent chromium determinations (Sections 6.17 and 8.4.4).

7.4.2 Ammonium iron (II) sulfate solution (0.01M)—Used to prepare the chromium (III) extraction solution (Section 7.4.3) necessary for field preservation of samples for trivalent chromium (Section 8.4.4). Prepare the ammonium iron (II) sulfate solution by adding 3.92 g ammonium iron (II) sulfate (ultrapure grade) to a 1-L volumetric flask. Bring to volume with reagent water. Store in a clean polyethylene bottle.

7.4.3 Chromium (III) extraction solution—For use when field-preserving samples for trivalent chromium determinations (Section 8.4.4). Prepare this solution by adding 100 mL of ammonium iron (II) sulfate solution (Section 7.4.2) to a 125-mL polyethylene bottle. Adjust pH to 8 with approximately 2 mL of ammonium hydroxide solution. Cap and shake on a wrist-action shaker for 24 h. This iron (III) hydroxide solution is stable for 30 days.

7.4.4 Hydrochloric acid—High-purity, 10% solution—shipped with sampling kit in fluoropolymer wash bottles for cleaning trivalent chromium sample preservation equipment between samples.

7.4.5 Chromium stock standard solution (1000 µg/mL)—Prepared by adding 3.1 g anhydrous chromium chloride to a 1-L flask and diluting to volume with 1% hydrochloric acid. Store in polyethylene bottle. A commercially available standard solution may be substituted.

7.4.6 Standard chromium spike solution (1000 µg/L)—Used to spike sample aliquots for matrix spike/matrix spike duplicate (MS/MSD) analysis and to prepare ongoing precision and recovery standards. Prepared by spiking 1 mL of the chromium stock standard solution (Section 7.4.5) into a 1-L flask. Dilute to volume with 1% HCl. Store in a polyethylene bottle.

7.4.7 Ongoing precision and recovery (OPR) standard (25 µg/L)—Prepared by spiking 2.5 mL of the standard chromium spike solution (Section 7.4.6) into a 100-mL flask. Dilute to volume with 1% HCl. One OPR is required for every ten samples.

8.0 Sample Collection, Filtration, and Handling

8.1 Site selection

8.1.1 Selection of a representative site for surface water sampling is based on many factors including: study objectives, water use, point source discharges, non-point source discharges, tributaries, changes in stream characteristics, types of stream bed, stream depth, turbulence, and the presence of structures (bridges, dams, etc.). When collecting samples to determine ambient levels of trace metals, the presence of potential sources of metal contamination are of extreme importance in site selection.

8.1.2 Ideally, the selected sampling site will exhibit a high degree of cross-sectional homogeneity. It may be possible to use previously collected data to identify locations for samples that are well mixed or are vertically or horizontally stratified. Since mixing is principally governed by turbulence and water velocity, the selection of a site immediately downstream of a riffle area will ensure good vertical mixing. Horizontal mixing occurs in constrictions in the channel. In the absence of turbulent areas, the selection of a site that is clear of immediate point sources, such as industrial effluents, is preferred for the collection of ambient water samples (*Reference 14.19*).

8.1.3 To minimize contamination from trace metals in the atmosphere, ambient water samples should be collected from sites that are as far as possible (e.g., at least several hundred feet) from any metal supports, bridges, wires or poles. Similarly, samples should be collected as far as possible from regularly or heavily traveled roads. If it is not possible to avoid collection near roadways, it is advisable to study traffic patterns and plan sampling events during lowest traffic flow (*Reference 14.7*).

8.1.4 The sampling activity should be planned to collect samples known or suspected to contain the lowest concentrations of trace metals first, finishing with the samples known or suspected to contain the highest concentrations. For example, if samples are collected from a flowing river or stream near an industrial or municipal discharge, the upstream sample should be collected first, the downstream sample collected second,

and the sample nearest the discharge collected last. If the concentrations of pollutants is not known and cannot be estimated, it is necessary to use precleaned sampling equipment at each sampling location.

8.2 Sample collection procedure—Before collecting ambient water samples, consideration should be given to the type of sample to be collected, the amount of sample needed, and the devices to be used (grab, surface, or subsurface samplers). Sufficient sample volume should be collected to allow for necessary quality control analyses, such as matrix spike/ matrix spike duplicate analyses.

8.2.1 Four (4) sampling procedures are described:

8.2.1.1 Section 8.2.5 describes a procedure for collecting samples directly into the sample container. This procedure is the simplest and provides the least potential for contamination because it requires the least amount of equipment and handling.

8.2.1.2 Section 8.2.6 describes a procedure for using a grab sampling device to collect samples.

8.2.1.3 Section 8.2.7 describes a procedure for depth sampling with a jar sampler. The size of sample container used is dependent on the amount of sample needed by the analytical laboratory.

8.2.1.4 Section 8.2.8 describes a procedure for continuous-flow sampling using a submersible or peristaltic pump.

8.2.2 The sampling team should ideally approach the site from down current and downwind to prevent contamination of the sample by particles sloughing off the boat or equipment. If it is not possible to approach from both, the site should be approached from down current if sampling from a boat or approached from downwind if sampling on foot. When sampling from a boat, the bow of the boat should be oriented into the current (the boat will be pointed upstream). All sampling activity should occur from the bow.

If the samples are being collected from a boat, it is recommended that the sampling team create a stable workstation by arranging the cooler or shipping container as a work table on the upwind side of the boat, covering this worktable and the upwind gunnel with plastic wrap or a plastic tablecloth, and draping the wrap or cloth over the gunnel. If necessary, duct tape is used to hold the wrap or cloth in place.

8.2.3 All operations involving contact with the sample bottle and with transfer of the sample from the sample collection device to the sample bottle (if the sample is not directly collected in the bottle) are handled by the individual designated as "clean hands." "Dirty hands" is responsible for all activities that do not involve direct contact with the sample.

Although the duties of "clean hands" and "dirty hands" would appear to be a logical separation of responsibilities, in fact, the completion of the entire protocol may require a good deal of coordination

and practice. For example, "dirty hands" must open the box or cooler containing the sample bottle and unzip the outer bag; clean hands must reach into the outer bag, open the inner bag, remove the bottle, collect the sample, replace the bottle lid, put the bottle back into the inner bag, and zip the inner bag. "Dirty hands" must close the outer bag and place it in a cooler.

To minimize unnecessary confusion, it is recommended that a third team member be available to complete the necessary sample documentation (e.g., to document sampling location, time, sample number, etc). Otherwise, "dirty hands" must perform the sample documentation activity (*Reference 14.7*).

8.2.4 Extreme care must be taken during all sampling operations to minimize exposure of the sample to human, atmospheric, and other sources of contamination. Care must be taken to avoid breathing directly on the sample, and whenever possible, the sample bottle should be opened, filled, and closed while submerged.

8.2.5 Manual collection of surface samples directly into the sample bottle

8.2.5.1 At the site, all sampling personnel must put on clean gloves (Section 6.7) before commencing sample collection activity, with "clean hands" donning shoulder-length gloves. If samples are to be analyzed for mercury, the sampling team must also put their precleaned wind suits on at this time. Note that "clean hands" should put on the shoulder-length polyethylene gloves (Section 6.7.1) and both "clean hands" and "dirty hands" should put on the PVC gloves (Section 6.7.2).

8.2.5.2 "Dirty hands" must open the cooler or storage container, remove the double-bagged sample bottle from storage, and unzip the outer bag.

8.2.5.3 Next, "clean hands" opens the inside bag containing the sample bottle, removes the bottle, and reseals the inside bag. "Dirty hands" then reseals the outer bag.

8.2.5.4 "Clean hands" unscrews the cap and, while holding the cap upside down, discards the dilute acid solution from the bottle into a carboy for wastes (Section 6.16) or discards the reagent water directly into the water body.

8.2.5.5 "Clean hands" then submerges the sample bottle, and allows the bottle to partially fill with sample. "Clean hands" screws the cap on the bottle, shakes the bottle several times, and empties the rinsate away from the site. After two more rinsings, "clean hands" holds the bottle under water and allows bottle to fill with sample. After the bottle has filled (i.e., when no more bubbles appear), and while the bottle is still inverted so that the mouth of the bottle is underwater, "clean hands" replaces the cap of the bottle. In this way, the sample has never contacted the air.

8.2.5.6 Once the bottle lid has been replaced, "dirty hands" reopens the outer plastic bag, and "clean hands" opens the inside bag, places the bottle inside it, and zips the inner bag.

8.2.5.7 "Dirty hands" zips the outer bag.

8.2.5.8 Documentation—after each sample is collected, the sample number is documented in the sampling log, and any unusual observations concerning the sample and the sampling are documented.

8.2.5.9 If the sample is to be analyzed for dissolved metals, it is filtered in accordance with the procedure described in Section 8.3.

8.2.6 Sample collection with grab sampling device—The following steps detail sample collection using the grab sampling device shown in Figure 1 and described in Section 6.4.1. The procedure is indicative of the "clean hands/dirty hands" technique that must be used with alternative grab sampling devices such as that shown in Figure 2 and described in Section 6.4.2.

8.2.6.1 The sampling team puts on gloves (and wind suits, if applicable). Ideally, a sample bottle will have been preattached to the sampling device in the class 100 clean room at the laboratory. If it is necessary to attach a bottle to the device in the field, "clean hands" performs this operation, described in Section 6.4.2, inside the field-portable glove bag (Section 6.6).

8.2.6.2 "Dirty hands" removes the sampling device from its storage container and opens the outer polyethylene bag.

8.2.6.3 "Clean hands" opens the inside polyethylene bag and removes the sampling device.

8.2.6.4 "Clean hands" changes gloves.

8.2.6.5 "Dirty hands" submerges the sampling device to the desired depth and pulls the fluoropolymer pull cord to bring the seal plate into the middle position so that water can enter the bottle.

8.2.6.6 When the bottle is full (i.e., when no more bubbles appear), "dirty hands" pulls the fluoropolymer cord to the final stop position to seal off the sample and removes the sampling device from the water.

8.2.6.7 "Dirty hands" returns the sampling device to its large inner plastic bag, "clean hands" pulls the bottle out of the collar, unscrews the bottle from the sealing device, and caps the bottle. "Clean hands" and "dirty hands" then return the bottle to its double-bagged storage as described in Sections 8.2.5.6–8.2.5.7.

8.2.6.8 Closing mechanism: "Clean hands" removes the closing mechanism from the body of the grab sampler, rinses the device with reagent water (Section 7.1), places it inside a new clean plastic bag, zips the bag, and places the bag inside an outer bag held by "dirty hands." "Dirty hands" zips the outer bag and places the double-bagged closing mechanism in the equipment storage box.

8.2.6.9 Sampling device: "Clean hands" seals the large inside bag containing the collar, pole, and cord and places the bag into a large outer bag held by "dirty

hands." "Dirty hands" seals the outside bag and places the double-bagged sampling device into the equipment storage box.

8.2.6.10 Documentation—after each sample is collected, the sample number is documented in the sampling log, and any unusual observations concerning the sample and the sampling are documented.

8.2.6.11 If the sample is to be analyzed for dissolved metals, it is filtered in accordance with the procedures described in Section 8.3.

8.2.7 Depth sampling using a jar sampling device (Figure 3 and Section 6.5.1)

8.2.7.1 The sampling team puts on gloves (and wind suits, if applicable) and handles bottles as with manual collection (Sections 8.2.5.1–8.2.5.4 and 8.2.5.6–8.2.5.7).

8.2.7.2 "Dirty hands" removes the jar sampling device from its storage container and opens the outer polyethylene bag.

8.2.7.3 "Clean hands" opens the inside polyethylene bag and removes the jar sampling apparatus. Ideally, the sampling device will have been preassembled in a class 100 clean room at the laboratory. If, however, it is necessary to assemble the device in the field, "clean hands" must perform this operation, described in Section 6.5.2, inside a field-portable glove bag (Section 6.6).

8.2.7.4 While "dirty hands" is holding the jar sampling apparatus, "clean hands" connects the pump to the to the 1/4-in. o.d. flush line.

8.2.7.5 "Dirty hands" lowers the weighted sampler to the desired depth.

8.2.7.6 "Dirty hands" turns on the pump allowing a large volume (>2 L) of water to pass through the system.

8.2.7.7 After stopping the pump, "dirty hands" pulls up the line, tubing, and device and places them into either a field-portable glove bag or a large, clean plastic bag as they emerge.

8.2.7.8 Both "clean hands" and "dirty hands" change gloves.

8.2.7.9 Using the technique described in Sections 8.2.5.2–8.2.5.4, the sampling team removes a sample bottle from storage, and "clean hands" places the bottle into the glove bag.

8.2.7.10 "Clean hands" tips the sampling jar and dispenses the sample through the short length of fluoropolymer tubing into the sample bottle.

8.2.7.11 Once the bottle is filled, "clean hands" replaces the cap of the bottle, returns the bottle to the inside polyethylene bag, and zips the bag.

"Clean hands" returns the zipped bag to the outside polyethylene bag held by "dirty hands."

8.2.7.12 "Dirty hands" zips the outside bag. If the sample is to be analyzed for dissolved metals, it is filtered as described in Section 8.3.

8.2.7.13 Documentation—after each sample is collected, the sample number is documented in the sampling log, and any unusual observations concerning the sample and the sampling are documented.

8.2.8 Continuous-flow sampling (Figure 4 and Section 6.5.2)—The continuous-flow sampling system uses peristaltic pump (Section 6.15) to pump sample to the boat or to shore through the SEBS-resin or PTFE tubing.

8.2.8.1 Before putting on wind suits or gloves, the sampling team removes the bags containing the pump (Section 6.15), SEBS-resin tubing (Section 6.15.2), batteries (Section 6.15.4), gloves (Section 6.7), plastic wrap (Section 6.9), wind suits (Section 6.12), and, if samples are to be filtered, the filtration apparatus (Section 6.14) from the coolers or storage containers in which they are packed.

8.2.8.2 "Clean hands" and "dirty hands" put on the wind suits and PVC gloves (Section 6.7.2).

8.2.8.3 "Dirty hands" removes the pump from its storage bag, and opens the bag containing the SEBS-resin tubing.

8.2.8.4 "Clean hands" installs the tubing while "dirty hands" holds the pump. "Clean hands" immerses the inlet end of the tubing in the sample stream.

8.2.8.5 Both "clean hands" and "dirty hands" change gloves. "Clean hands" also puts on shoulder length polyethylene gloves (Section 6.7.1).

8.2.8.6 "Dirty hands" turns the pump on and allows the pump to run for 5–10 minutes or longer to purge the pump and tubing.

8.2.8.7 If the sample is to be filtered, "clean hands" installs the filter at the end of the tubing, and "dirty hands" sets up the filter holder on the gunwale as shown in Figure 4.

Note: *The filtration apparatus is not attached until immediately before sampling to prevent buildup of particulates from clogging the filter.*

8.2.8.8 The sample is collected by rinsing the sample bottle and cap three times and collecting the sample from the flowing stream.

8.2.8.9 Documentation—after each sample is collected, the sample number is documented in the sampling log, and any unusual observations concerning the sample and the sampling are documented.

8.3 Sample filtration—The filtration procedure described below is used for samples collected using the manual (Section 8.2.5), grab (Section 8.2.6), or jar (Section 8.2.7) collection systems (*Reference 14.7*). In-line filtration using the continuous-flow approach is described in Section 8.2.8.7. Because of the risk of contamination, it is recommended that samples for mercury be shipped unfiltered by overnight courier and filtered when received at the laboratory.

8.3.1 Set up the filtration system inside the glove bag, using the shortest piece of pump tubing as is practicable. Place the peristaltic pump immediately outside of the glove bag and poke a small hole in the glove bag for passage of the tubing. Also, attach a short length of tubing to the outlet of the capsule filter.

8.3.2 "Clean hands" removes the water sample from the inner storage bag using the technique described in Sections 8.2.5.2–8.2.5.4 and places the sample inside the glove bag. "Clean hands" also places two clean empty sample bottles, a bottle containing reagent water, and a bottle for waste in the glove bag.

8.3.3 "Clean hands" removes the lid of the reagent water bottle and places the end of the pump tubing in the bottle.

8.3.4 "Dirty hands" starts the pump and passes approximately 200 mL of reagent water through the tubing and filter into the waste bottle. "Clean hands" then moves the outlet tubing to a clean bottle and collects the remaining reagent water as a blank. "Dirty hands" stops the pump.

8.3.5 "Clean hands" removes the lid of the sample bottle and places the intake end of the tubing in the bottle.

8.3.6 "Dirty hands" starts the pump and passes approximately 50 mL through the tubing and filter into the remaining clean sample bottle and then stops the pump. "Clean hands" uses the filtrate to rinse the bottle, discards the waste sample, and returns the outlet tube to the sample bottle.

8.3.7 "Dirty hands" starts the pump and the remaining sample is processed through the filter and collected in the sample bottle. If preservation is required, the sample is acidified at this point (Section 8.4).

8.3.8 "Clean hands" replaces the lid on the bottle, returns the bottle to the inside bag, and zips the bag. "Clean hands" then places the zipped bag into the outer bag held by "dirty hands."

8.3.9 "Dirty hands" zips the outer bag, and places the double-bagged sample bottle into a clean, ice-filled cooler for immediate shipment to the laboratory.

8.3.10 Note: It is not advisable to reclean and reuse filters. The difficulty and risk associated with failing to properly clean these devices far outweighs the cost of purchasing a new filter.

8.4 Preservation

8.4.1 Field preservation is not necessary for dissolved metals, except for trivalent and hexavalent chromium, provided that the sample is preserved in the laboratory and allowed to stand for at least two days to allow the metals adsorbed to the container walls to redissolve. Field preservation is advised for hexavalent chromium in order to provide sample stability for up to 30 days. Mercury samples should be shipped by overnight courier and preserved when received at the laboratory.

8.4.2 If field preservation is required, preservation must be performed in the glove bag or in a designated clean area, with gloved hands, as rapidly as possible to preclude particulates from contaminating the sample. For preservation of trivalent chromium, the glove bag or designated clean area must be large enough to accommodate the vacuum filtration apparatus (Section 6.17.3), and an area should be available for setting up the wrist-action shaker (Section 6.17.5). It is also advisable to set up a work area that contains a "clean" cooler for storage of clean equipment, a "dirty" cooler for storage of "dirty" equipment, and a third cooler to store samples for shipment to the laboratory.

8.4.3 Preservation of aliquots for metals other than trivalent and hexavalent chromium—Using a disposable, precleaned, plastic pipet, add 5 mL of a 10% solution of ultrapure nitric acid in reagent water per liter of sample. This will be sufficient to preserve a neutral sample to pH <2.

8.4.4 Preservation of aliquots for trivalent chromium (*References 14.8–14.9*)

8.4.4.1 Decant 100 mL of the sample into a clean polyethylene bottle.

8.4.4.2 Clean an Eppendorf pipet by pipeting 1 mL of 10% HCl (Section (7.4.4) followed by 1 mL of reagent water into an acid waste container. Use the rinsed pipet to add 1 mL of chromium (III) extraction solution (Section 7.4.3) to each sample and blank.

8.4.4.3 Cap each bottle tightly, place in a clean polyethylene bag, and shake on a wrist action shaker (Section 6.17.5) for 1 h.

8.4.4.4 Vacuum-filter the precipitate through a 0.4- µm pretreated filter membrane (Section 6.17.2), using fluoropolymer forceps (Section 6.17.1) to handle the membrane, and a 47-mm vacuum filtration apparatus with a precleaned filter holder (Section 6.17.3). After all sample has filtered, rinse the inside of the filter holder with approximately 15 mL of reagent water.

8.4.4.5 Using the fluoropolymer forceps, fold the membrane in half and then in quarters, taking care to avoid touching the side containing the filtrate to any surface. (Folding is done while the membrane is sitting on the filter holder

and allows easy placement of the membrane into the sample vial). Transfer the filter to a 30-mL fluoropolymer vial. If the fluoropolymer vial was not pre-equipped with the ultrapure nitric acid (Section 7.4.1), rinse the pipet by drawing and discharging 1 mL of 10% HCl followed by 1 mL of reagent water into a waste container, and add 1 mL of ultrapure nitric acid to the sample vial.

8.4.4.6 Cap the vial and double-bag it for shipment to the laboratory.

8.4.4.7 Repeat steps 8.4.4.4 through 8.4.4.6 for each sample, rinsing the fluropolymer forceps and the pipet with 10% high-purity HCl followed by reagent water between samples.

8.4.5 Preservation of aliquots for hexavalent chromium (*Reference 14.20*)

8.4.5.1 Decant 125 mL of sample into a clean polyethylene bottle.

8.4.5.2 Prepare an Eppendorf pipet by pipeting 1 mL of 10% HCl (Section 7.4.4) followed by 1 mL of reagent water into an acid waste container. Use the rinsed pipet to add 1 mL NaOH to each 125-mL sample and blank aliquot.

8.4.5.3 Cap the vial(s) and double-bag for shipment to the laboratory.

9.0 Quality Assurance/Quality Control

9.1 The sampling team shall employ a strict quality assurance/ quality control (QA/QC) program. The minimum requirements of this program include the collection of equipment blanks, field blanks, and field replicates. It is also desirable to include blind QC samples as part of the program. If samples will be processed for trivalent chromium determinations, the sampling team shall also prepare method blank, OPR, and MS/MSD samples as described in Section 9.6.

9.2 The sampling team is permitted to modify the sampling techniques described in this method to improve performance or reduce sampling costs, provided that reliable analyses of samples are obtained and that samples and blanks are not contaminated. Each time a modification is made to the procedures, the sampling team is required to demonstrate that the modification does not result in contamination of field and equipment blanks. The requirements for modification are given in Sections 9.3 and 9.4. Because the acceptability of a modification is based on the results obtained with the modification, the sampling team must work with an analytical laboratory capable of making trace metals determinations to demonstrate equivalence.

9.3 Equipment Blanks

9.3.1 Before using any sampling equipment at a given site, the laboratory or equipment cleaning contractor is required to generate equipment blanks to demonstrate that the equipment is free from contamination. Two types of equipment blanks are required: bottle blanks and sampling equipment blanks.

9.3.2 Equipment blanks must be run on all equipment that will be used in the field. If, for example, samples are to be collected using both a grab sampling device and the jar sampling device, then an equipment blank must be run on both pieces of equipment.

9.3.3 Equipment blanks are generated in the laboratory or at the equipment cleaning contractor's facility by processing reagent water through the equipment using the same procedures that are used in the field (Section 8). Therefore, the "clean hands/dirty hands" technique used during field sampling should be followed when preparing equipment blanks at the laboratory or cleaning facility. In addition, training programs must require ~~must require~~ sampling personnel to collect a clean equipment blank before performing on-site field activities.

9.3.4 Detailed procedures for collecting equipment blanks are given in the analytical methods referenced in Table 1.

9.3.5 The equipment blank must be analyzed using the procedures detailed in the referenced analytical method (see Table 1). If any metal(s) of interest or any potentially interfering substance is detected in the equipment blank at the minimum level specified in the referenced method, the source of contamination/interference must be identified and removed. The equipment must be demonstrated to be free from the metal(s) of interest before the equipment may be used in the field.

9.4 Field Blank

9.4.1 To demonstrate that sample contamination has not occurred during field sampling and sample processing, at least one (1) field blank must be generated for every ten (10) samples that are collected at a given site. Field blanks are collected before sample collection.

9.4.2 Field blanks are generated by filling a large carboy or other appropriate container with reagent water (Section 7.1) in the laboratory, transporting the filled container to the sampling site, processing the water through each of the sample processing steps and equipment (e.g., tubing, sampling devices, filters, etc.) that will be used in the field, collecting the field blank in one of the sample bottles, and shipping the bottle to the laboratory for analysis in accordance with the method(s) referenced in Table 1. For example, manual grab sampler field blanks are collected by directly submerging a sample bottle into the water, filling the bottle, and capping. Subsurface sampler field blanks are collected by immersing the tubing into the water and pumping water into a sample container.

9.4.3 Filter the field blanks using the procedures described in Section 8.3.

9.4.4 If it is necessary to acid clean the sampling equipment between samples (Section 10), a field blank should be collected after the cleaning procedures but before the next sample is collected.

9.4.5 If trivalent chromium aliquots are processed, a separate field blank must be collected and processed through the sample preparation steps given in Sections 8.4.4.1–8.4.4.6.

9.5 Field Duplicate

9.5.1 To assess the precision of the field sampling and analytical processes, at least one (1) field duplicate sample must be collected for every ten (10) samples that are collected at a given site.

9.5.2 The field duplicate is collected either by splitting a larger volume into two aliquots in the glove box, by using a sampler with dual inlets that allows simultaneous collection of two samples, or by collecting two samples in rapid succession.

9.5.3 Field duplicates for dissolved metals determinations must be processed using the procedures in Section 8.3. Field duplicates for trivalent chromium must be processed through the sample preparation steps given in Sections 8.4.4.1–8.4.4.6.

9.6 Additional QC for Collection of Trivalent Chromium Aliquots

9.6.1 Method blank—The sampling team must prepare one method blank for every ten or fewer field samples. Each method blank is prepared using the steps in Sections 8.4.4.1–8.4.4.6 on a 100-mL aliquot of reagent water (Section 7.1). Do not use the procedures in Section 8.3 to process the method blank through the 0.45-µm filter (Section 6.14.1), even if samples are being collected for dissolved metals determinations.

9.6.2 Ongoing precision and recovery (OPR)—The sampling team must prepare one OPR for every ten or fewer field samples. The OPR is prepared using the steps in Sections 8.4.4.1–8.4.4.6 on the OPR standard (Section 7.4.7). Do not use the procedures in Section 8.3 to process the OPR through the 0.45-µm filter (Section 6.14.1), even if samples are being collected for dissolved metals determinations.

9.6.3 MS/MSD—The sampling team must prepare one MS and one MSD for every ten or fewer field samples.

9.6.3.1 If, through historical data, the background concentration of the sample can be estimated, the MS and MSD samples should be spiked at a level of 1 to 5 times the background concentration.

9.6.3.2 For samples in which the background concentration is unknown, the MS and MSD samples should be spiked at a concentration of 25 µg/L.

9.6.3.3 Prepare the matrix spike sample by spiking a 100-mL aliquot of sample with 2.5 mL of the standard chromium spike solution (Section 7.4.6), and processing the MS through the steps in Sections 8.4.4.1–8.4.4.6.

9.6.3.4 Prepare the matrix spike duplicate sample by spiking a second 100-mL aliquot of the same sample with 2.5 mL of the standard chromium spike solution, and processing the MSD through the steps in Sections 8.4.4.1–8.4.4.6.

9.6.3.5 If field samples are collected for dissolved metals determinations, it is necessary to process an MS and an MSD through the 0.45-µm filter as described in Section 8.3.

10.0 Recleaning the Apparatus Between Samples

10.1 Sampling activity should be planned so that samples known or suspected to contain the lowest concentrations of trace metals are collected first with the samples known or suspected to contain the highest concentrations of trace metals collected last. In this manner, cleaning of the sampling equipment between samples is unnecessary. If it is not possible to plan sampling activity in this manner, dedicated sampling equipment should be provided for each sampling event.

10.2 If samples are collected from adjacent sites (e.g., immediately upstream or downstream), rinsing of the sampling Apparatus with water that is to be sampled should be sufficient.

10.3 If it is necessary to cross a gradient (i.e., going from a high-concentration sample to a low-concentration sample), such as might occur when collecting at a second site, the following procedure may be used to clean the sampling equipment between samples:

10.3.1 In the glove bag, and using the "clean hands/dirty hands" procedure in Section 8.2.5, process the dilute nitric acid solution (Section 7.2) through the Apparatus.

10.3.2 Dump the spent dilute acid in the waste carboy or in the waterbody away from the sampling point.

10.3.3 Process 1L of reagent water through the Apparatus to rinse the equipment and discard the spent water.

10.3.4 Collect a field blank as described in Section 9.4.

10.3.5 Rinse the Apparatus with copious amounts of the ambient water sample and proceed with sample collection.

10.4 Procedures for recleaning trivalent chromium preservation equipment between samples are described in Section 8.4.4.

11.0 Method Performance

Samples were collected in the Great Lakes during September–October 1994 using the procedures in this sampling method.

12.0 Pollution Prevention

12.1 The only materials used in this method that could be considered pollutants are the acids used in the cleaning of the Apparatus, the boat, and related materials. These acids are used in dilute solutions in small amounts and pose little threat to the environment when managed properly.

12.2 Cleaning solutions containing acids should be prepared in volumes consistent with use to minimize the disposal of excessive volumes of acid.

12.3 To the extent possible, the Apparatus used to collect samples should be cleaned and reused to minimize the generation of solid waste.

13.0 Waste Management

13.1 It is the sampling team's responsibility to comply with all federal, state, and local regulations governing waste management, particularly the discharge regulations, hazardous waste identification rules, and land disposal restrictions; and to protect the air, water, and land by minimizing and controlling all releases from field operations.

13.3 For further information on waste management, consult "The Waste Management Manual for Laboratory Personnel" and "Less is Better—Laboratory Chemical Management for Waste Reduction," available from the American Chemical Society's Department of Government Relations and Science Policy, 1155 16th Street N.W., Washington, DC 20036.

14.0 References

14.1 Adeloju, S.B.; Bond, A.M., "Influence of Laboratory Environment on the Precision and Accuracy of Trace Element Analysis," *Anal. Chem.* 1985, *57*, 1728.

14.2 Berman, S.S.; Yeats, P.A., "Sampling of Seawater for Trace Metals," *CRC Reviews in Analytical Chemistry* 1985, *16*.

14.3 Bloom, N.S. "Ultra-Clean Sampling, Storage, and Analytical Strategies for the Accurate Determination of Trace Metals in Natural Waters." Presented at the 16th Annual EPA Conference on the Analysis of Pollutants in the Environment, Norfolk, VA, May 5, 1993.

14.4 Bruland, K.W., "Trace Elements in Seawater," *Chemical Oceanography* 1983, *8*, 157.

14.5 Nriagu, J.O.; Larson, G.; Wong, H.K.T.; Azcue, J.M., "A Protocol for Minimizing Contamination in the Analysis of Trace Metals in Great Lakes Waters," *J. Great Lakes Research* 1993, *19*, 175.

14.6 Patterson, C.C.; Settle, D.M., "Accuracy in Trace Analysis," in *National Bureau of Standards Special Publication 422*; LaFleur, P.D., Ed., U.S. Government Printing Office, Washington, DC, 1976.

14.7 "A Protocol for the Collection and Processing of Surface-Water Samples for Subsequent Determination of Trace Elements, Nutrients, and Major Ions in Filtered Water"; Office of Water Quality Technical Memorandum 94.09, Office of Water Quality, Water Resources Division, U.S. Geological Survey, Reston, VA, Jan. 28, 1994.

14.8 Standard Operating Procedure No. 4-54, Revision 01, *SOP for Concentration and Analysis of Chromium Species in Whole Seawater;* Prepared by Battelle Ocean Sciences, Duxbury, MA for the U.S. Environmental Protection Agency Office of Marine Environmental Protection, Ocean Incineration Research Program, 1987.

14.9 Cranston, R.E.; Murray, J.W., "The Determination of Chromium Species in Natural Waters," *Anal. Chem. Acta* 1978, *99*, 275.

14.10 Prothro, M.G. "Office of Water Policy and Technical Guidance on Interpretation and Implementation of Aquatic Life Metals Criteria"; EPA Memorandum to Regional Water Management and Environmental Services Division Directors, Oct. 1, 1993.

14.11 "Format for Method Documentation"; Distributed by the EPA Environmental Monitoring Management Council, Washington, DC, Nov. 18, 1993.

14.12 Windom, H.L; Byrd, J.T.; Smith, R.G., Jr.; Huan, F., "Inadequacy of NASQAN Data for Assessing Metal Trends in the Nation's Rivers," *Environ. Sci. Technol.* 1991, *25*, 1137.

14.13 Zief, M.; Mitchell, J.W., "Contamination Control in Trace Metals Analysis," *Chemical Analysis* 1976; Vol. 47, Chapter 6.

14.14 Phillips, H.; Shafer, M.; Dean, P.; Walker, M.; Armstrong, D. "Recommendations for Trace Metals Analysis of Natural Waters"; Wisconsin Department of Natural Resources: Madison, WI, May 1992.

14.15 Hunt, C.D. In *Manual of Biological and Geochemical Techniques in Coastal Areas*, 2nd ed.; Lambert, C.E. and Oviatt, C.A., Eds.; Marine Ecosystems Research Laboratory; Graduate School of Oceanography; The University of Rhode Island: Narragansett, RI, MERL Series, Report No. 1, Chapter IV.

14.16 Flegal, R. Summer 1994 San Francisco Bay Cruise, apparatus and procedures witnessed and videotaped by W. Telliard and T. Fieldsend, Sept. 15–16, 1994.

14.17 Watras, C. Wisconsin DNR procedures for mercury sampling in pristine lakes in Wisconsin, witnessed and videotaped by D. Rushneck and L. Riddick, Sept. 9–10, 1994.

14.18 Horowitz, A.J.; Kent A.E.; Colberg, M.R. "The Effect of Membrane Filtration Artifacts on Dissolved Trace Element Concentrations," *Wat. Res. 26*, 1992, 753.

14.19 *Engineering Support Branch Standard Operating Procedures and Quality Assurance Manual: 1986;* U.S. Environmental Protection Agency. Region IV. Environmental Services Division: Athens, GA.

14.20 Grohse, P. Research Triangle Institute, Institute Drive, Building 6, Research Triangle Park, NC.

14.21 Methods 1624 and 1625, 40 *CFR* Part 136, Appendix A.

15.0 Glossary of Definitions and Purposes

These definitions and purposes are specific to this sampling method but have been conformed to common usage as much as possible.

15.1 Ambient Water—Waters in the natural environment (e.g., rivers, lakes, streams, and other receiving waters), as opposed to effluent discharges.

15.2 Apparatus—The sample container and other containers, filters, filter holders, labware, tubing, pipets, and other materials and devices used for sample collection or sample preparation, and that will contact samples, blanks, or analytical standards.

15.3 Equipment blank—An aliquot of reagent water that is subjected in the laboratory to all aspects of sample collection and analysis, including contact with all sampling devices and apparatus. The purpose of the equipment blank is determine if the sampling devices and apparatus for sample collection have been adequately cleaned before they are shipped to the field site. An acceptable equipment blank must be achieved before the sampling devices and apparatus are used for sample collection.

15.4 Field blank—An aliquot of reagent water that is placed in a sample container in the laboratory, shipped to the field, and treated as a sample in all respects, including contact with the sampling devices and exposure to sampling site conditions, filtration, storage, preservation, and all analytical procedures. The purpose of the field blank is to determine if the field or sample transporting procedures and environments have contaminated the sample.

15.5 Field duplicates (FD1 and FD2)—Two identical aliquots of a sample collected in separate sample bottles at the same time and place under identical circumstances using a duel inlet sampler or by splitting a larger aliquot and treated exactly the same throughout field and laboratory procedures. Analyses of FD1 and FD2 give a measure of the precision associated with sample collection, preservation, and storage, as well as with laboratory procedures.

15.6 Matrix spike (MS) and matrix spike duplicate (MSD)—Aliquots of an environmental sample to which known quantities of the analytes are added in the laboratory. The MS and MSD are analyzed exactly like a sample. Their purpose is to quantify the bias and precision caused by the sample matrix. The background concentrations of the analytes in the sample matrix must be determined in a separate aliquot and the measured values in the MS and MSD corrected for background concentrations.

15.7 May—This action, activity, or procedural step is optional.

15.8 May not—This action, activity, or procedural step is prohibited.

15.9 Minimum level (ML)—The lowest level at which the entire analytical system gives a recognizable signal and acceptable calibration point (*Reference 14.21*).

15.10 Must—This action, activity, or procedural step is required.

15.11 Reagent water—Water demonstrated to be free from the metal(s) of interest and potentially interfering substances at the MDL for that metal in the Referenced Method or Additional Method.

15.12 Should—This action, activity, or procedural step is suggested but not required.

15.13 Trace-metal grade—Reagents which have been demonstrated to be free from the metal(s) of interest at the method detection limit (MDL) of the analytical method to be used for determination of this metal(s).

Note: The term "trace-metal grade" has been used in place of "reagent grade" or "reagent" because acids and other materials labeled "reagent grade" have been shown to contain concentrations of metals that will interfere in the determination of trace metals at levels listed in Table 1.

Table 1
Analytical Methods, Metals, and Concentration Levels Applicable to Method 1669

Method	Technique	Metal	MDL (µg/L)[1]	ML (µg/L)[2]
1631	Oxidation/Purge & Trap/CVAFS	Mercury	0.00005[3]	0.0002
1632	Hydride AA	Arsenic	0.002	0.005
1636	Ion Chromatography	Hexavalent Chromium	0.23	0.5
1637	CC/STGFAA	Cadmium	0.0074	0.02
		Lead	0.036	0.1
1638	ICP/MS	Antimony	0.0097	0.02
		Cadmium	0.013	0.1
		Copper	0.087	0.2
		Lead	0.015	0.05
		Nickel	0.33	1
		Selenium	1.2	5
		Silver	0.029	0.1
		Thallium	0.0079	0.02
		Zinc	0.14	0.5
1639	STGFAA	Antimony	1.9	5
		Cadmium	0.023	0.05
		Trivalent Chromium	0.10	0.2
		Nickel	0.65	2
		Selenium	0.83	2
		Zinc	0.14	0.5
1640	CC/ICP/MS	Cadmium	0.0024	0.01
		Copper	0.024	0.1
		Lead	0.0081	0.02
		Nickel	0.029	0.1

[1] Method Detection Limit as determined by 40 *CFR* Part 136, Appendix B

[2] Minimum Level (ML) calculated by multiplying laboratory-determined MDL by 3.18 and rounding result to nearest multiple of 1, 2, 5, 10, 20, 50 etc., in accordance with procedures utilized by EAD and described in the EPA *Draft National Guidance for the Permitting, Monitoring, and Enforcement of Water Quality-Based Effluent Limitations Set Below Analytical Detection/Quantitation Levels*, March 22, 1994.

[3] MDL for Hg by Method 1631 is an estimated value based on the standard deviation of blank measurements rather than the procedure defined in 40 *CFR* Part 136, Appendix B.

Table 2
Analytes, Preservation Requirements, and Containers

Metal	Preservation Requirements	Acceptable Containers
Antimony Arsenic Cadmium Copper Lead Nickel Selenium Silver Thallium Zinc	Add 5 mL of 10% HNO_3 to 1-L sample: preserve on-site or immediately upon laboratory receipt	500-mL or 1-L fluoropolymer, conventional or linear polyethylene, polycarbonate, or polypropylene containers with lid.
Chromium (III)	Add 1 mL chromium (III) extraction solution to 100 mL aliquot, vacuum filter through 0.4 µm membrane, add 1 mL 10% HNO_3; preserve on-site immediately after collection	500-mL or 1-L fluoropolymer, conventional or linear polyethylene, polycarbonate, or polypropylene containers with lid.
Chromium (IV)	Add 50% NaOH; preserve immediately after sample collection	500-mL or 1-L fluoropolymer, conventional or linear polyethylene, polycarbonate, or polypropylene containers with lid.
Mercury	Total: Add 0.5% high- purity HCl or 0.5% BrCl to pH <2; Total & Methyl: Add 0.5% high-purity HCL; preserve on-site or immediately upon laboratory receipt	Fluoropolymer or borosilicate glass bottles with fluoropolymer or fluoropolymer-lined caps.

Figure 1 - Grab Sampling Device

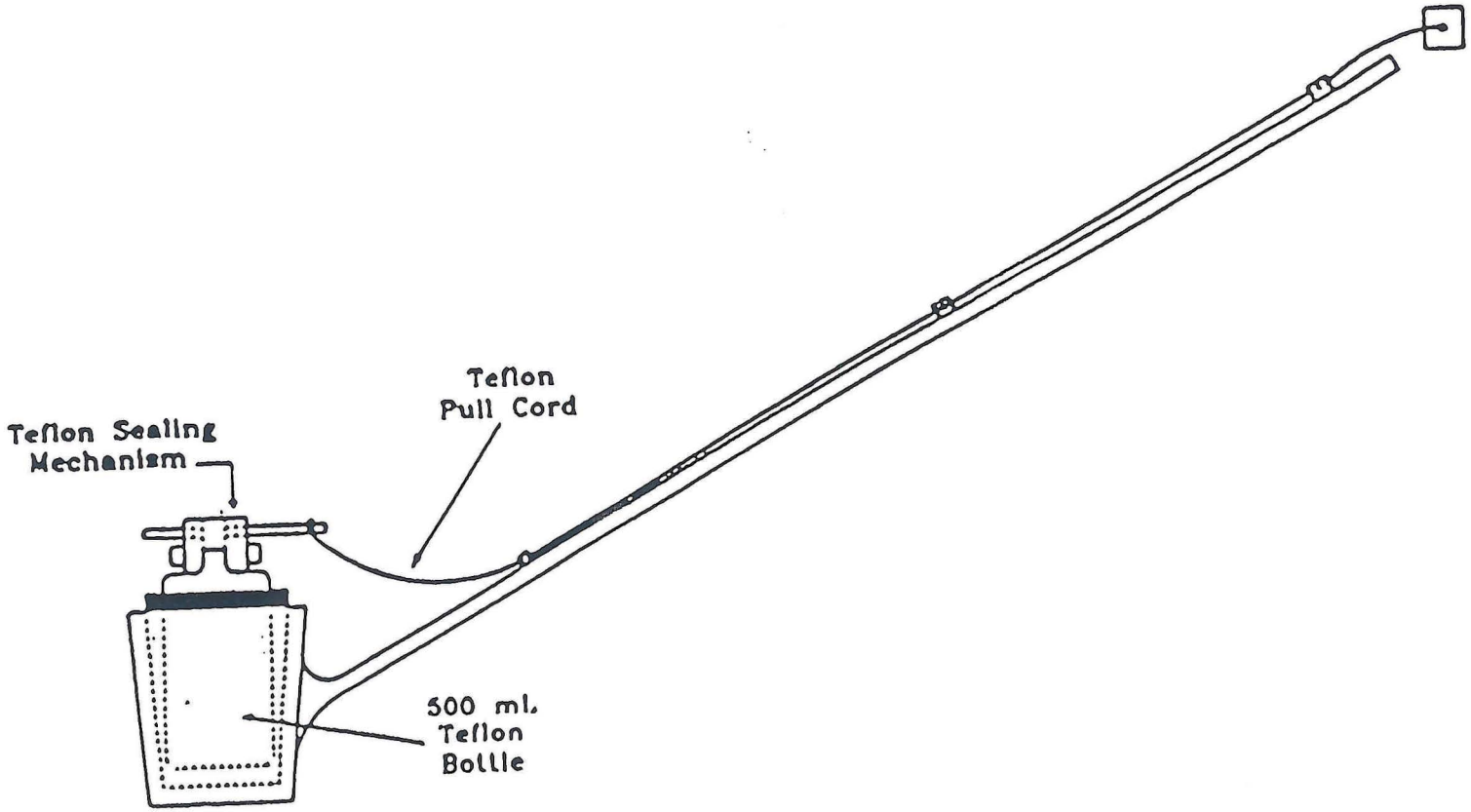

Figure 2 - Grab Sampling Device

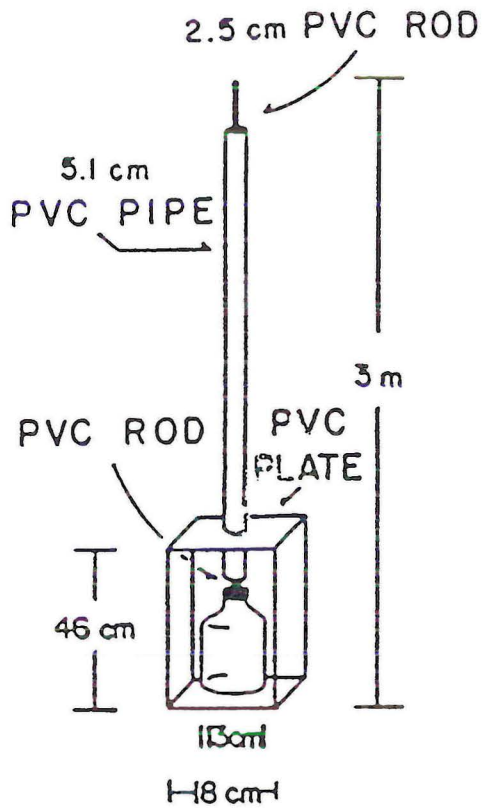

Figure 3 - Jar Sampling Device

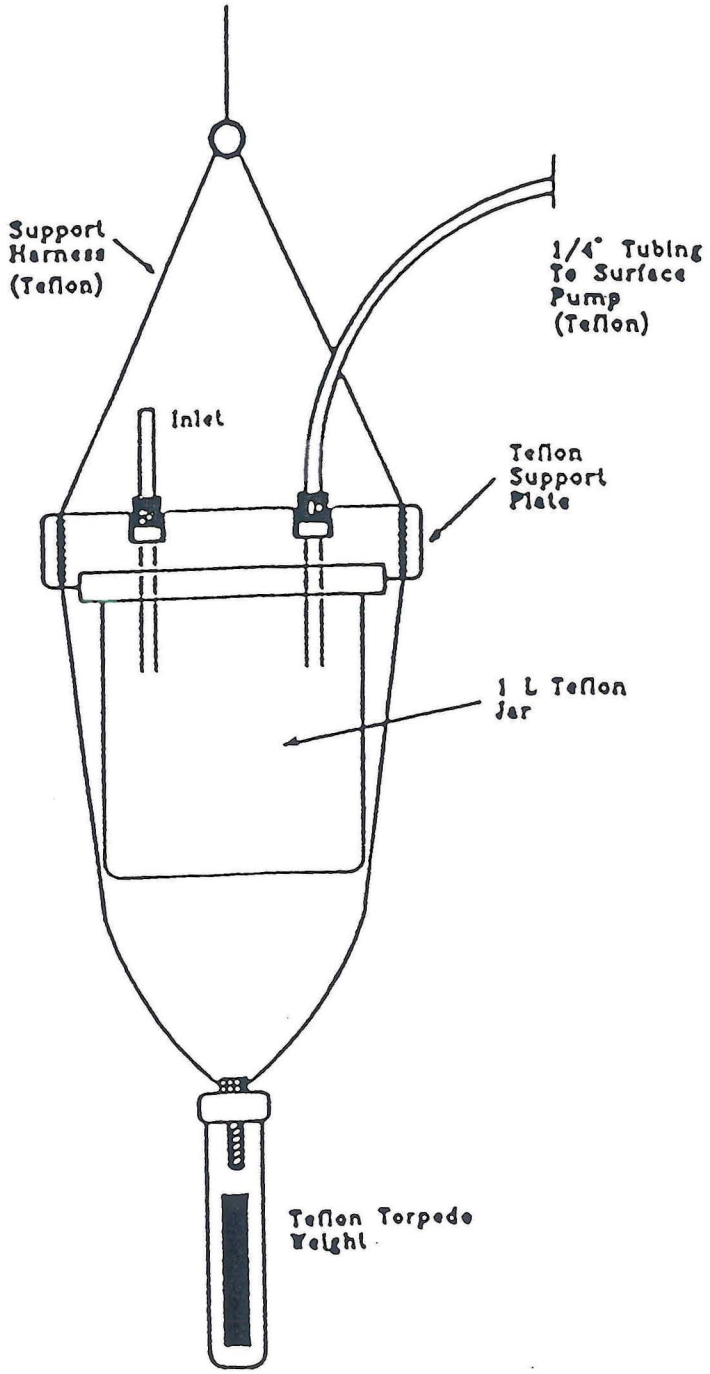

Figure 4 - Sample Pumping System

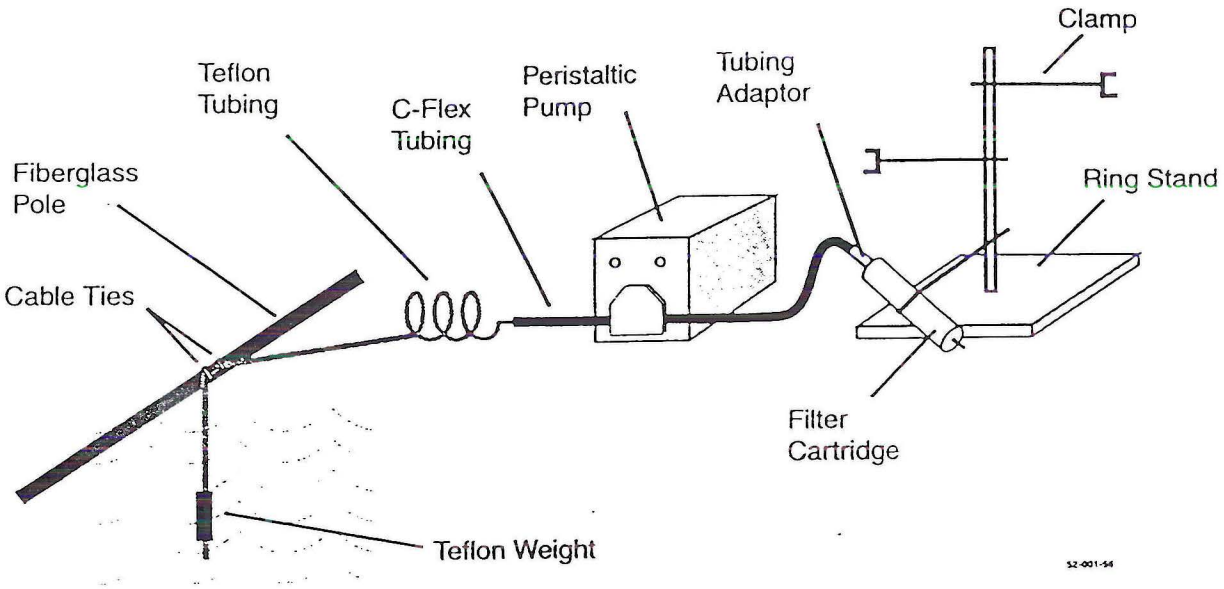

APPENDIX B
QUALITY ASSURANCE PROJECT PLAN - TRACE METALS SAMPLING PROGRAM, VIEQUES ISLAND, PUERTO RICO

FINAL

QUALITY ASSURANCE PROJECT PLAN
TRACE METALS SAMPLING PROGRAM

VIEQUES ISLAND, PUERTO RICO

CONTRACT TASK ORDER 0395

OCTOBER 20, 1999

Prepared for:

DEPARTMENT OF THE NAVY
ATLANTIC DIVISION
NAVAL FACILITIES
ENGINEERING COMMAND
Norfolk, Virginia

Under the:

LANTDIV CLEAN Program
Contract N62470-89-D-4814

Prepared by:

BAKER ENVIRONMENTAL, INC.
Carpools, Pennsylvania

TABLE OF CONTENTS

Page

1.0 INTRODUCTION 1-1

2.0 PROJECT DESCRIPTION 2-1
2.1 Overall Project Objectives 2-1
2.1.1 Task 1 – Sampling Plans and QAPP 2-1
2.1.2 Task 2 – Sampling 2-2
2.2 QAPP Preparation Guidelines 2-3
2.3 Project Summary 2-3
2.4 Project Schedule 2-4

3.0 CHEMICAL DATA QUALITY OBJECTIVES 3-1
3.1 Data Uses 3-1
3.2 Data Quality Needs 3-2
3.3 Method Specific Data Quality Objectives 3-3
3.3.1 Precision and Accuracy 3-3
3.3.2 Representativeness 3-4
3.3.3 Completeness 3-4
3.3.4 Comparability 3-5

4.0 PROJECT ORGANIZATION AND QC RESPONSIBILITY 4-1
4.1 Overview 4-1
4.2 Organization Chart 4-1
4.3 Project Responsibilities 4-1
4.3.1 Navy Technical Representative 4-1
4.3.2 LANTDIV QA Manager 4-2
4.3.3 Baker Project Management 4-2
4.3.4 Overall QA Officer 4-2
4.3.5 Clean Sampling Coordinator (Field QA Coordinator) 4-3
4.3.6 GPS Operator 4-3
4.3.7 Laboratory QA Coordinators 4-3
4.3.8 Laboratory Sampling and Analysis Teams 4-4
4.4 Data Validation 4-4

5.0 LABORATORY ANALYTICAL PROCEDURES 5-1
5.1 Introduction 5-1
5.2 Laboratory QC Samples 5-2
5.2.1 Laboratory Method Blank 5-2
5.2.2 Matrix Spike/Matrix Spike Duplicates – Inorganic 5-2
5.2.3 Laboratory Control Samples 5-3
5.3 Field QA/QC Samples 5-3
5.3.1 Field Duplicates/Splits 5-3

TABLE OF CONTENTS
(Continued)

Page

6.0 SAMPLING PROCEDURES 6-1

7.0 PREVENTATIVE MAINTENANCE PROCEDURES 7-1
7.1 Field Equipment 7-1
7.2 Laboratory Instruments 7-1

8.0 CALIBRATION PROCEDURES AND FREQUENCY 8-1
8.1 Field Instruments 8-1
8.2 Laboratory Instruments 8-1
8.2.1 Metals 8-2
8.2.2 Other Analyses 8-2

9.0 CORRECTIVE ACTION 9-1
9.1 Field Procedures 9-1
9.2 Laboratory Procedures 9-1

10.0 DATA REDUCTION, VALIDATION, AND REPORTING 10-1
10.1 Data Reduction 10-1
10.2 Analytical Data Package Requirements 10-1
10.2.1 Method Blanks 10-1
10.2.2 Matrix Spike/Matrix Spike Duplicate Samples 10-2
10.2.3 Laboratory Control Samples 10-2
10.2.4 Other Method Quality Control 10-2
10.3 Data Validation 10-2

TABLES

5-1 Analytical Methods

FIGURES

2-1 CWA/NPDES Sample Location

4-1 Project Organization Chart

APPENDICES

A Puerto Rico Environmental Quality Board Requirements

B Guidelines for Inorganic Data Review

1.0 INTRODUCTION

This Quality Assurance Project Plan (QAPP) presents the organization, objectives, functional activities, and specific quality assurance/quality control (QA/QC) activities associated with the investigation of sea water quality surrounding the Atlantic Fleet Weapons Training Facility (AFWTF), Vieques Island, Puerto Rico. It contains information concerning site background, project objectives and scope, sampling descriptions and rationale, and data quality objectives (DQOs). In addition, a Sampling and Analyses Plan (SAP) containing information on "clean" and conventional sampling - have been developed that discuss specific protocols that will be followed for sampling, sample storage/handling, sample tracking (custody), and field and laboratory analyses.

The field activities include the collection of equipment blanks, field blanks, primary sea water samples, duplicate sea water samples, and blind control samples to be analyzed using both "clean" techniques (as specified by EPA Method 1669) and the conventional techniques (those currently used to support the Navy's NPDES permit for the AFWTF). The Navy has identified 22 historical background stations and/or other environmental quality sampling points that are to be evaluated. Samples will be analyzed for parameters associated with the NPDES permit for the AFWTF.

Baker Environmental, Inc. (Baker) will serve as the primary contractor for field sampling activities. Battelle Ocean Sciences and Columbia Analytical Services, Inc. will provide "clean" analytical services. Caribtec Laboratories, Inc will conduct conventional sampling and analysis. Caribtec will split their samples for analysis by a second conventional laboratory (STL-Savannah Laboratories).

2.0 PROJECT DESCRIPTION

The Navy Atlantic Fleet Weapons Training Facility (AFWTF) is used to train military personnel in air to ground strikes, naval gunfire support, and amphibious assaults. Training is conducted with practice and live rounds. The AFWTF holds a NPDES Permit (PRG990001) for the discharge of ordnance to surface waters located in the Inner Range, which is at the eastern end of Vieques Island and its surrounding waters. The Navy was directed to apply for the permit by U.S. District Court. The Navy applied for the permit in 1979. EPA issued the permit in October 1984. The permit was reapplied for in 1989 but has been administratively continued. The permit requires sampling of the water twice per month immediately after discharge of ordnance. Water quality results and ordnance usage (tons per month and percent live ordnance) must be reported quarterly. The permit has water quality limits for several conventional parameters, metals, cyanide and phenolics. The permit allows these limits to be exceeded if the natural background concentration (NBC) is not exceeded.

In June 1999, the Commonwealth of Puerto Rico issued a Notice of Intent (NOI) to file suit against the Navy for continuing violations of the AFWTF NPDES permit (as well as violations of the RCRA, the CAA, and the ESA). The plaintiffs hope to permanently close the range based on the Navy's alleged violations of environmental laws. The Navy believes that results of past compliance sampling were erroneously high due to the sampling and analysis techniques that were used.

2.1 Overall Project Objectives

The objective of this task order is to collect water quality samples in the vicinity of AFWTF Vieques Island using both clean and conventional sampling and analytical techniques in order to show how results are affected by differences in sampling and analytical techniques and to assess water quality conditions.

2.1.1 Task 1 – Sampling Plans and QAPP

A Sampling and Analysis Plan has been prepared for this effort, which includes both "clean" sampling and conventional sampling. This QAPP is incorporated into the sampling plan by reference.

2.1.2 Task 2 – Sampling

The "clean" and conventional sampling at AFWTF Vieques Island will be performed for the purposes of data collection for the 24 parameters listed in the NPDES permit according to the following general scope:

- Provide high quality trace metals data, using EPA Method 1669 (for metals), for a surface water sampling event at Atlantic Fleet Weapons Training Facility, Puerto Rico. All metals will be analyzed as total recoverable and dissolved. All QA samples required by EPA Method 1669 will be taken.
- Samples will be collected in accordance with Method 1669 and submitted to two "clean" laboratories, Batelle and Columbia.
- A conventional laboratory located in Puerto Rico (Caribtec) will collect and analyze samples using conventional collection and analysis techniques and to split the samples with another conventional laboratory located in the U.S. (STL-Savannah).
- Provide boats, trained technicians or engineers, and sampling equipment to:
  - prepare for the sampling event
  - obtain sample containers from an analytical laboratory
  - collect and handle samples for shipment
  - immediately deliver samples by overnight express courier to analytical laboratory
  - submit documentation on field procedures and events.
- Coordinate all entry to sampling area with designated Navy security for training activities through cell phone communication. No entry into the training area is allowed unless Navy security has authorized the entry.
- Identify locations of sample collection through GPS.

2.2 QAPP Preparation Guidelines

All QA/QC procedures described herein are structured in accordance with applicable USEPA requirements, regulations, guidelines, and technical standards.

2.3 Project Summary

This study will be conducted 22 points identified by the Navy as being historical background stations and/or relevant environmental sampling points:

- RW-01 through RW-10 (Background Stations)
- SP#1, SP#2, SP#3, SP#8, SP#9, SP#10, SP#11, and SP#12 (Navy sampling locations)
- One point east of Punte del Este
- One point on the west side of the mouth of Bahia Salina del Sur
- One point north of Isabel Segunda
- One point south of Esperanza

Sampling locations are shown on Figure 2-1. After the samples are collected, they will be shipped to the U.S. laboratories using an overnight courier for next day delivery.

Quality Assurance/Quality Control (QA/QC) samples will be collected for the four analytical laboratories. These will include QA/QC samples pertinent to fieldwork such as equipment blanks, field blanks, primary samples, duplicates samples, and blind control samples. Definitions for each type of QA/QC sample are provided in Section 5.0. Project-specific collection procedures are provided in the SAP.

The sampling and analyses (including QA/QC) for the conventional sampling will be performed in accordance with EQB guidance which is included in this QAPP as Appendix A.

2.4 Project Schedule

Samples are to be collected as soon as logistically possible. Sampling should be completed within one week. Full data packages are anticipated to be available 60 days from the receipt of samples by the laboratories. Data validation is anticipated to be a two-week effort, following Baker's receipt of the complete data packages. A technical memorandum will be prepared and presented to the Navy within three weeks of complete data package receipt.

3.0 CHEMICAL DATA QUALITY OBJECTIVES

3.1 Data Uses

For each site designated for environmental sampling, the following Data Quality Objectives (DQOs) have been identified:

- Assess the presence or absence of metals and other NPDES permit parameters using "clean" sampling and analysis techniques. Sampling and analysis procedures will be as specified in "clean" procedures SAP, which is based on EPA Method 1669. This evaluation shall address seawater matrices, although equipment blanks and field blanks will be metals-free DI based rinsates/samples). It is intended that the two "clean" laboratories perform identical analytical procedures, appropriate for the specified matrix. The "clean" labs shall make a concerted effort to ensure that the analyses of these samples are identical. The labs will use state of the art methodology and instrumentation (i.e., ICP-MS) for addressing salinity interference and meeting the desired quantification levels as provided on Table 3-1.

- Assess the presence or absence of metals and other NPDES permit parameters using conventional sampling and analysis procedures. The sampling procedure is intended to reflect the normal sampling procedures used by Caribtec for routine NPDES permit compliance. It is the intent that different analytical protocol be utilized by the two labs, with Caribtec using historical procedures (e.g., ICP for boron, GFAA for arsenic and selenium, and FAA for the rest of the metals). STL-Savannah is required to use ICP and GFAA exclusively. This evaluation shall address seawater only.

3.2 Data Quality Needs

DQOs are qualitative and quantitative statements that specify the quality of the data required supporting decisions made during the remedial investigation. The DQOs are based on the end uses of the data to be collected. As such, different data uses may require different levels of data quality. To assist in the interpretation of data, the following two descriptive data categories are used:

- **Screening Data with Definitive Confirmation**

  Screening data are generated by rapid, less precise methods of analysis with less rigorous sample preparation. Screening data provide analyte identification and quantification, although quantification may be relatively imprecise. Screening data without associated confirmation data are not considered to be data of known quality. Screening data for this project (data generated on-site) include temperature, pH, turbidity, and dissolved oxygen.

- **Definitive Data**

  Definitive data are generated using rigorous analytical methods, such as approved U.S. EPA reference methods. Data are analyte-specific, with confirmation of analyte identity and concentration. Methods produce tangible raw data (e.g., chromatograms, spectra, and digital values) in the form of paper printouts or computer-generated electronic files. Data may be generated at the site or at an off-site location, as long as the QA/QC requirements are satisfied. For the data to be definitive, either analytical or total measurement error must be determined.

3.3 Method Specific Data Quality Objectives

Precision, accuracy, representativeness, completeness, and comparability goals for this project are described below. These data quality parameters are expressed as goals due to uncertainties regarding field conditions and the complexity of the sample matrices at the site. The ability of the laboratory to extract and quantify the target analytes is highly dependent on matrix complexity. Seawater is a difficult matrix, typically containing very high levels of dissolved salts and extremely low levels of metals. Great care must be taken both in the field and at the laboratory to generate representative results. The variability of field conditions such as ocean currents and proximity to ocean inlets also may affect the data representativeness and comparability.

3.3.1 Precision and Accuracy

Precision is a measure of the reproducibility of measurements under a given set of conditions. Accuracy is a measure of the bias that exists in a measurement system.

Field duplicates are collected and analyzed to assess field sampling activities. The results determine ambient conditions (precision) at the site.

Inorganic precision and accuracy data are determined by using duplicate samples (precision), matrix spike and laboratory control samples (accuracy). The following procedure is used:

Typically, for a duplicate sample analysis, at least one duplicate sample is analyzed per sample matrix type (e.g., water, soil) per batch of samples or one per 10 samples received, whichever is more frequent. It is estimated that five batches of samples (one per day) will be generated; therefore, 5 field duplicates will be generated. Samples identified as field blanks cannot be used for duplicate sample analysis. If two analytical methods are used to obtain the reported values for the same element for a batch of samples (i.e., ICP, GFAA), duplicate samples will be run by each method. The relative percent difference (RPD) for each component is calculated for later use during data assessment.

When applicable, control limits established by SW-846 are used to judge acceptability of data generated by the laboratory. Where EPA acceptability criteria does not exist, the laboratory will use control limits derived in-house through the use of control charts. Control limits will not automatically initiate reanalysis if they are not met; corrective action will be based on method requirements.

3.3.2 Representativeness

Representativeness is a qualitative element that is related to the ability to collect a sample that reflects the characteristics of that part of the environment that is to be assessed. Specific representativeness statistical goals are established because co-located samples an integral element to this project. Sample representativeness is dependent on the sampling techniques used and is considered individually for each project. Representativeness is a measure of how closely the measured results reflect the actual concentration or distribution of the chemical compounds in the sample. Sample handling protocols (e.g., storage, preservation and transportation) have been developed to preserve the representativeness of the samples. Proper documentation will establish that protocols have been followed and sample identification and integrity assured. Every attempt will be made to ensure that the aliquots taken for analysis are representative of the samples received.

3.3.3 Completeness

Completeness is defined as the amount of valid data obtained from the laboratory compared with the amount of data that would be expected under normal conditions. Data are considered to be valid, if they are unqualified or if they are qualified as estimated with a J code. The laboratory qualifies data based on its internal SOPs. The data validator will review all laboratory qualifiers during his review of the entire data package. The laboratory data completeness will be 95 percent or better. The goal for holding times is 95 percent. Hexavalent chromium has an unpreserved holding time of 24 hours. Since it is likely the samples cannot be delivered in this timeframe, samples for this constituent will be field preserved to extend the holding time to 30 days.

3.3.4 Comparability

Data generated needs to be comparable to established regulatory values and to previous sampling that has been performed at the identified locations. Comparability is achieved through using standard methods to collect and analyze samples and by reporting analytical results in appropriate units. Sample collection, preparation, cleanup (if necessary), analytical, and reporting procedures/methods will be consistent, per matrix/batch, for each analytical group for the duration of the project. Quantitation level requirements to be used for the analytical results are presented on tables found in Section 5.0 Laboratory Analytical Procedures.

4.0 PROJECT ORGANIZATION AND QC RESPONSIBILITY

4.1 Overview

The Baker project management organization is designed to provide a line of functional responsibility and authority supported by a management control structure and independent quality assurance review. This control structure provides for:

- Clearly identified lines of communication and coordination;
- Project budget and schedule monitoring;
- Key technical resources management;
- Financial management and progress reports; and
- Quality Control.

4.2 Organization Chart

An organization chart, which identifies the functional roles and interrelationships of key project participants is presented on Figure 4-1. In the following sections, the responsibilities of key project team member, relative to the overall QA/QC objectives of the project, are identified. Information regarding the laboratories and data validator selected to perform the chemical analyses is also provided.

4.3 Project Responsibilities

4.3.1 Navy Technical Representative

The Navy Technical Representative (NTR) has the overall responsibility for this study. The NTR for the Vieques Island "clean" and conventional field sampling activities is Mr. David Cotnoir. All coordination of project activities and technical issues will be managed by the NTR.

4.3.2 LANTDIV QA Manager

During the performance of field activities and data generation, LANTDIV may, at their option, provide a QA Manager who will remain independent of direct job involvement and day-to-day operations, and have direct access to the LANTDIV Project Manager and LANTDIV Technical Manager, as necessary, to resolve any QA dispute. The QA Manager may conduct audits during field activities to ensure the QA program is being implemented in conformance with the project work plans and LANTDIV requirements.

4.3.3 Baker Project Management

Mr. Thomas Fuller is the PM for Baker, the primary contractor for the field sampling and data analysis efforts. Mr. Fuller is responsible for coordinating the project quality control, interaction with LANTDIV, coordination of project budget, scheduling, data interpretation, and subcontractor's duties. He shall have the authority to commit the resources necessary to meet the project objectives and requirements. The Baker project manager shall report directly to both the LANTDIV PM and the LANTDIV Technical Manager and will be the major point of contact and control for all project related matters.

4.3.4 Overall QA Officer

The Baker QA Officer is responsible for ongoing surveillance of project activities to help ensure conformance with this QAPP (plus the "clean" and conventional SAPs) to evaluate the effectiveness of its requirements. The QA Officer has access to all personnel and subcontractors as necessary to resolve quality problems, and has the authority to stop field activities if major deficiencies in quality occur. The Baker QA Officer will be responsible for ensuring all applicable procedures for this project are being followed. The Overall QA Coordinator will be responsible for ensuring a full data validation, in accordance with procedures stated in USEPA guidance documents, on 100% of the analyses performed for the project. Mr. Mike Emanuel has been assigned as the Overall QA Officer for this project.

4.3.5 Clean Sampling Coordinator (Field QA Coordinator)

The Clean Sampling Coordinator (Field QA Coordinator) will be the primary technical point of contact for the field team on data quality issues, and will be responsible for overall coordination of on-site clean and conventional field sampling activities. Additionally, the Clean Sampling Coordinator will be responsible for decisions regarding any necessary modifications the SAPs and overseeing LANTDIV, Puerto Rico, and/or USEPA approvals and implementation of any such changes. Mr. Michael Emanuel has been assigned as the Baker's Clean Sampling Coordinator for the project.

4.3.6 GPS Operator

A GPS operator will accompany the field sampling teams to the various sampling sites to measure and record the coordinates at which each sample was taken. He will also assist the conventional sampling team, as necessary.

4.3.7 Laboratory QA Coordinators

Each laboratory will assign a QA Coordinator who will be the primary technical point of on data quality issues, and will be responsible for coordination of chemical analyses. Additionally, the Laboratory QA Coordinators will be responsible for the initial data review of all sample results from the analytical laboratories. Laboratory QA Coordinators for the project are:

- Batelle -- Dr. Eric A Crecelius
- Columbia -- Mr. Harvey Jacky
- Caribtec -- Mr. Peter Sandza
- STL-Savannah -- Ms. Betsy Beauchamp

4.3.8 Laboratory Sampling and Analysis Teams

Caribtec will provide a sampling team for this effort. The personnel and their specific roles are documented in the SAP for this project. All four laboratories will utilize a team of chemists to perform the required analyses and associated quality control evaluations.

4.4 Data Validation

Data validation will be performed in accordance with EPA guidance. This work will be performed by a subcontractor to Baker on 100% of the analyses.

Data validation will be performed on laboratory data for organic and inorganic analyses to assess the quality and usability of the data. During validation, the sample holding times, initial and continuing instrument calibrations, blank analyses (equipment blanks, field blanks, and method blanks), matrix spike/matrix spike duplicate (MS/MSD) analyses, laboratory control sample (LCS) analyses, duplicate analyses (laboratory and field), and internal standard performance will be evaluated.

Attached is Heartland Environmental Services, Inc. (the third party, independent data validation firm) SOP for data validation. It should be noted that the SOP is written for inorganic validation of SW-846 methods. While this is the case, the inorganic analytical methods (1600 series and 200 series) requested for the AFTWF Pre-exercise Sampling at Vieques Island, Puerto Rico can be easily adapted to our data validation and review procedure. Each analytical method identified in the Scope of work and QAPP for the sampling event will be evaluated, where applicable, for the following:

- Chain of Custody
- Analytical Results (Form 1s)
- Calibration Standards Data
- Calibration and Preparation Blank Data
- Interference Check Standard Data
- MS/MSD Data
- Duplicate Data
- LCS Data
- Standard Additions Data
- Serial Dilution Data
- Analytical Sequence Data

In most instances, the heartland ESI SOP will not reflect the correct QA/QC control limits of the methods utilized for this project, therefore, method specific QA/QC control limits will be employed in the review and validation of the analytical data. Each method implemented by the four laboratories will be reviewed for similarities and differences. After all differences have been identified, review and validation procedures will be put into place to insure that the data validation for the different analytical methods will be as consistent as possible with each other and that all results will reflect the continuity of the validation.

5.0 LABORATORY ANALYTICAL PROCEDURES

5.1 Introduction

This project will include the analysis of mid-depth sea water samples following chemical groups/fractions:

- Metals (total and dissolved fractions)
  - Arsenic
  - Barium
  - Boron
  - Cadmium
  - Chromium (Hexavalent)
  - Chromium (Total)
  - Copper
  - Iron
  - Lead
  - Manganese
  - Mercury
  - Selenium
  - Silver
  - Zinc
- pH
- Temperature
- Dissolved Oxygen
- Turbidity
- Color
- Nitrate-Nitrite (as N)
- Ammonia
- Oil and Grease
- Fluorides
- Sulfide

- Phenolics
- Cyanide

Target quantitation limits and analytical methods (by laboratory) are presented in Table 5-1. Descriptions of the internal quality control checks performed by the laboratories are provided below.

5.2 Laboratory QC Samples

5.2.1 Laboratory Method Blank

A method blank will be prepared and analyzed with each batch of 20 or fewer samples. The samples for this project will be batched together. If analytes are detected above the quantitation limits listed on Table 5-1, preparation and analysis will be stopped and the source of contamination found, documented, and eliminated. All samples following the last contaminant-free method blank that contained the contaminant will be re-prepared and re-analyzed.

5.2.2 Matrix Spike/Matrix Spike Duplicates - Inorganic

If the spike recovery results exceed the limits set in accordance with lab SOPs, the respective sample result will be qualified. For example, if the spike recovery result for an analyte is below the value derived by the lab, but above a certain percentage (calculated by each laboratory in accordance with their internal SOPs), the result will be qualified as estimated with a "J" code. If the spike recovery result for an analyte is less than the lab calculated percentage and the respective sample result is reported as not detected at (or less than) the practical quantitation limit, the associated samples will be qualified as unusable.

In instances where the sample concentration exceeds the spike concentration by a factor of four (4) or more, the limits will not apply. However, no more than a laboratory calculated percentage (based on individual SOPs) of all spike recovery data reported for a given analyte may be reported where the sample concentration exceeds the spike concentration by a factor of four (4) or more. If the frequency exceeds this percentage, the matrix spike and matrix spike duplicate samples will be re-prepared at a higher spike concentration.

5.2.3 Laboratory Control Samples

Laboratory Control Samples (LCS) are samples which have been prepared in a matrix similar to that of the field samples, and which have been spiked with known concentrations of analytes. The LCS standard is prepared independently of calibration standards to provide a check on instrument calibration. The LCS is prepared and analyzed by the same methods as the field sample. The percent recovery of the analytes in the LCS indicates if the analytical method is in control. If the control limits are exceeded, the LCS and all field samples extracted/analyzed with that batch must be re-extracted and reanalyzed unless otherwise approved.

5.3 Field QA/QC Samples

5.3.1 Field Duplicates/Splits

Field QC duplicates are samples taken in the field at the same time and in the same manner as the original sample for the purpose of verifying the sampling technique. Field duplicates are compared using the following RPD calculation:

$$RPD = \frac{(D1-D2)}{(D1+D2/2)} \times 100$$

6.0 SAMPLING PROCEDURES

Field sample collection procedures are stated in the SAP dated October 1999.

Sample containers and preservatives will be obtained directly from the analytical laboratory subcontractors. The originating laboratory will certify all sample containers as clean and a certificate of analysis will be supplied with each lot ordered. These certificates will be kept on file by each laboratory and a record of the bottle lot numbers and preservatives used in the field will be made in the field sampling log; bottle lots and preservatives will be traceable to the field sample numbers. Sample containers to be used are listed in the project SAP, and are grouped by analytes and matrix.

7.0 PREVENTATIVE MAINTENANCE PROCEDURES

7.1 Field Equipment

Field equipment for this project includes a thermometer (or other approved temperature gauge), pH meter, turbidity meter, and dissolved oxygen meter. Specific preventative maintenance procedures recommended by the manufacturer will be followed for field equipment.

Field instruments will be checked and calibrated at Baker before they are shipped or carried to the field. These instruments will be checked and calibrated daily before and after use. In addition, the calibration will be checked anytime the equipment is turned off during the day and anytime there is a questionable response from the equipment. All calibrations and checks will be documented in a field notebook.

In the case where a piece of field equipment breaks, cannot be calibrated or fails a post analysis calibration, the results of the sampling by conventional techniques will be used.

7.2 Laboratory Instruments

A routine preventative maintenance program is conducted by all laboratories to minimize the occurrence of instrument failure and other system malfunctions. Section supervisors and/or analysts (organic, inorganic) perform routine scheduled maintenance, and coordinate with the vendor for the repair of all instruments. All laboratory instruments are maintained in accordance with manufacturer's specifications and the requirements of the specific method employed. This maintenance is carried out on a regular, scheduled basis, and is documented in the laboratory instrument service logbook for each instrument. Emergency repair or scheduled manufacturers maintenance is provided under a repair and maintenance contract with factory representatives. All preventative maintenance will be performed in accordance with the specific laboratory Quality Assurance Plan.

8.0 CALIBRATION PROCEDURES AND FREQUENCY

8.1 Field Instruments

Maintenance and proper documentation of field instruments are essential to the monitoring program. Before mobilization to the field, all equipment must be checked for malfunctions and cleaned. In addition, all meters must be calibrated by the sampling team to ensure proper working order and to render integrity to the measured values. Calibration procedures provided by the manufacturer will be followed.

The clean sampling coordinator is responsible for maintaining the field meter calibration information for field instruments. This should reflect the same information as that for permanent lab instruments (i.e., ID number, name, and model of meter). The log also contains calibration results and notes for each day of equipment use. At a minimum, documentation will include the following:

- Date of calibration
- Initials of person performing calibration
- Calibration results
- Calibration standard batch or Serial Number (when applicable)
- Calibration standard Expiration Date (when applicable)

Calibration will be performed prior to and after daily use for the pH meter, turbidity meter, and dissolved oxygen meter. In addition, the calibration will be checked any time the equipment is turned off during the day and any time there is a questionable response from the equipment.

8.2 Laboratory Instruments

Laboratory calibration procedures and frequency will be done in accordance with the methods listed on Table 5-1. Documentation of calibration and maintenance is kept in bound notebooks. If equipment has been out of service for two weeks or longer, the equipment will be recalibrated immediately prior to use and than at the frequencies prescribed below to ensure acceptable continual calibration while in use. Calibration procedures for the laboratory are summarized in the paragraphs that follow.

8.2.1 Metals

For each analyte of interest, a calibration curve is prepared which covers the linear working range of the method. For mercury analyses, a minimum of three concentration levels and a blank are used to construct the calibration curve, including one near the upper limit of the concentration range and one near the lower limit of the concentration range with an equitable distribution of the remaining points. For the ICP analysis, the calibration curve consists of one standard and a blank. Instrument detection limits and linear range is established quarterly. All metals calibrations will be performed based on the analytical method and individual laboratory's SOPs.

The linear regression technique is used to find a straight line that best fits a set of calibration points. For a calibration curve to be acceptable, the correlation coefficient must be greater than or equal to 0.995, and the difference between the value observed for an independent standard and the value predicted for that standard using the fitted calibration curve must be within ten percent.

A calibration verification check sample and calibration blank are analyzed after every ten samples and at the end of the analyses for the day. Recalibration of the ICP is performed if the ten-percent limit is exceeded, and the ten samples preceding the out-of control check standard and blank are reanalyzed. Recalibration for mercury is performed if the 20% limit is exceeded.

8.2.2 Other Analyses

Calibration will be performed using standard laboratory protocols. Documentation of calibration in the final data reports will be required.

9.0 CORRECTIVE ACTION

A corrective action protocol that is both technically effective and administratively compatible to ensure accurate and timely correction of non-conformance is imperative. The sections that follow describe the corrective action plan for this project.

9.1 Field Procedures

For the field activities, the Clean Sampling Coordinator is responsible for all site activities. In this role, he may be required to adjust the field program to accommodate site-specific needs. If it becomes necessary to modify the program, then he will consult the Baker and the NTR regarding an appropriate corrective action. Agreed upon corrective actions for the program will be documented in the field notes. Changes may include deleting a sampling location or modifying a documented sampling protocol to better ensure the quality assurance/quality control for the project.

Work may be stopped by the Clean Sampling Coordinator if corrective actions to significant problems are insufficient, the problem remains unresolved or if results or prior work are indeterminate.

9.2 Laboratory Procedures

Nonconformance is any event that is beyond the limits established for laboratory performance such as data which fall outside accepted bounds for accuracy and precision, due to improper equipment calibration/maintenance or improper data verification. Any activity in the laboratory that affects data quality can result in a nonconformance.

Nonconformance associated with the statistical analysis and review of data are straightforward to identify. The Laboratory QA Coordinators will be responsible for the assessment of QC sample information. The Baker PM and the NTR will be notified of any non-conformances.

Corrective actions will be designed to correct the associated problems and to minimize the possibility of their recurrence. Examples of corrective actions are modifying non-conforming procedures; tagging, repairing, or replacing deficient equipment; training or replacing unqualified personnel; re-analyzing affected samples; marking rejected data, and reissuing affected reports.

10.0 DATA REDUCTION, VALIDATION, AND REPORTING

10.1 Data Reduction

Upon completion of the analysis, the analyst calculates the final sample and associated QC results from the raw data. Additionally, for organic analyses, the analyst will review the scans of each sample and standard on the instrument terminal. The analyst will check for recovery of surrogate compounds, sample response within the linear range of the calibration curve, and the integration of peaks. Peaks that appear suspect may be re-integrated by the analyst.

10.2 Analytical Data Package Requirements

The data will be submitted to Baker in both hard copy and on disk. All data packages will be CLP-type in that all the information required for the CLP will be provided. For each analytical method run, the laboratory will report all required analytes for each sample as a detected concentration or as non-detected. Detections below the TQL will be reported to the MDL and qualified as appropriate. In addition, applicable method detection limits and instrument detection limits will be required for every analysis. Each analytical method run will be clearly identified as belonging to a specific analytical batch. All samples must be reported with dates of collection, preparation and analysis. The laboratory will also report dilution factors for each sample.

A complete set of quality control results, including calibration data, will be reported for each analytical batch. All required method QC will be performed on project samples. The quality control samples required and their frequency are identified in Section 5.0. A 60-calendar day turnaround time (for complete data packages) from sample receipt at the laboratory to data receipt will be needed for all samples. Raw data should be made available to Baker within 15 days of sample receipt. The laboratories will hold and make available all project raw data for a minimum period of three years after samples have been analyzed.

10.2.1 Method Blanks

All analytes will be reported for each laboratory blank. All sample results will be designated as corresponding to a particular laboratory blank in terms of analytical batch processing.

10.2.2 Matrix Spike/Matrix Spike Duplicate Samples

Matrix spike recoveries and RPDs will be reported for the samples. All general sample results will be designated as corresponding to a particular MS/MSD pair. The report will indicate what field sample was spiked; MS/MSDs will be performed on project samples. The control limits for the matrix spike recoveries and RPD criteria are specified on Table 5-3 and will be included in the data package.

10.2.3 Laboratory Control Samples

The laboratory control results will be reported for all analyses. All sample results will be designated as corresponding to a particular LCS sample in terms of analytical batch processing. Control limits will be included in the data package.

10.2.4 Other Method Quality Control

Additional quality control checks, such as method of standard additions and serial dilutions for the analysis of metals, analytical spikes for metals, initial and continuing calibration data for all analytes, internal standard areas and tunes will be reported. Control limit ranges for all QA/QC samples will also be reported.

10.3 Data Validation

The QA Coordinator will coordinate a subcontracted review of the QC results for 100 percent of the data. Inorganic results will be validated using the "Laboratory Data Validation Functional Guidelines for Evaluating Inorganics Analysis," dated February 1994. These guidelines will be used for procedures applicable to the EPA methods. Control limits established in this QAPP will be used for the validation process. Data will be validated for the following parameters as applicable to the various inorganic parameters:

- Data Quality Statement
- Holding Times/Sample Temperature/Sample Preservation
- Initial Calibration
- Continuing Calibration

- Laboratory Method Blanks
- Matrix Spike/Matrix Spike Duplicates
- Laboratory Control Samples
- ICP Serial Dilutions
- Furnace Quality Control (only if ICP fails)
- Field Duplicates
- Field Blanks
- Analytical Duplicates
- Confirmation Analyses (as applicable)

TABLES

TABLE 5-1
ANALYTICAL METHODS
AFWTF PRE-EXERCISE SAMPLING
VIEQUES ISLAND, PUERTO RICO

Analyte	Target Quantitation Limit (ug/l)	Batelle Methods [a]	Columbia Methods [a]	Caribtec Methods [b]	STL-Savannah Methods
Inorganics (Total & Dissolved):					
Arsenic	1.4	1640	RP/200.8[c]	206.2	200.7, 200.9
Barium	1000	1638	200.7	208.1	200.7
Boron	4800	1638	200.7	200.7	200.7
Cadmium	5.0	1640	RP/200.8	213.1	200.7
Hex. Chromium	50	1636	7196	218.4	200.7
Total Chromium	300	1640	200.7	218.1	200.7
Copper	2.9	1640	RP/200.8	220.1	200.7, 200.9
Iron	200	1638	200.7	236.1	200.7
Lead	8.5	1640	RP/200.8	239.1	200.7
Manganese	100	1640	200.7	243.1	200.7
Mercury	0.15	1631	1631	245.2	245.1
Selenium	10	1640	1639	270.2	200.7
Silver	2.0	1638	RP/200.8	272.1	200.7, 200.9
Zinc	50	1640	200.7	200.7	200.7
Other:					
pH	NA	NA	NA	150.1	150.1
Temperature	NA	NA	NA	170.1	NA
Dissolved Oxygen	NA	NA	NA	638	NA
Turbidity	NA	NA	NA	180.1	180.1
Color	NA	110.2	110.2	110.1	110.2
Nitrate-Nitrite (as N)	5000	353.2	353.2	353.1	353.2
Ammonia	5000	350.1/350.3	350.1	350.1	350.1
Oil and Grease	15000	413.1/9070	413.1	413.1	1664
Fluorides	1300	340.2	340.2	340.1	340.2
Sulfide	2	376.1/9030	376.2	376.1	376.2
Phenolics	10	420.1/9065	420.1	420.1	420.1
Cyanide	1.0	335.2	335.2	335.2	335.3

Notes:

[a] = Sample preparation to address salinity shall be matrix modification (chelators) or ion exchange, as agreed upon by Battelle and Columbia.
[b] = Quantitation limits may be waived for Caribtec – methods should coincide with those used in the past.
[c] = RP methods use "reductive precipitation" which is an alternative chemical separation technique for ICP-MS.
NA = Not Applicable.

FIGURES

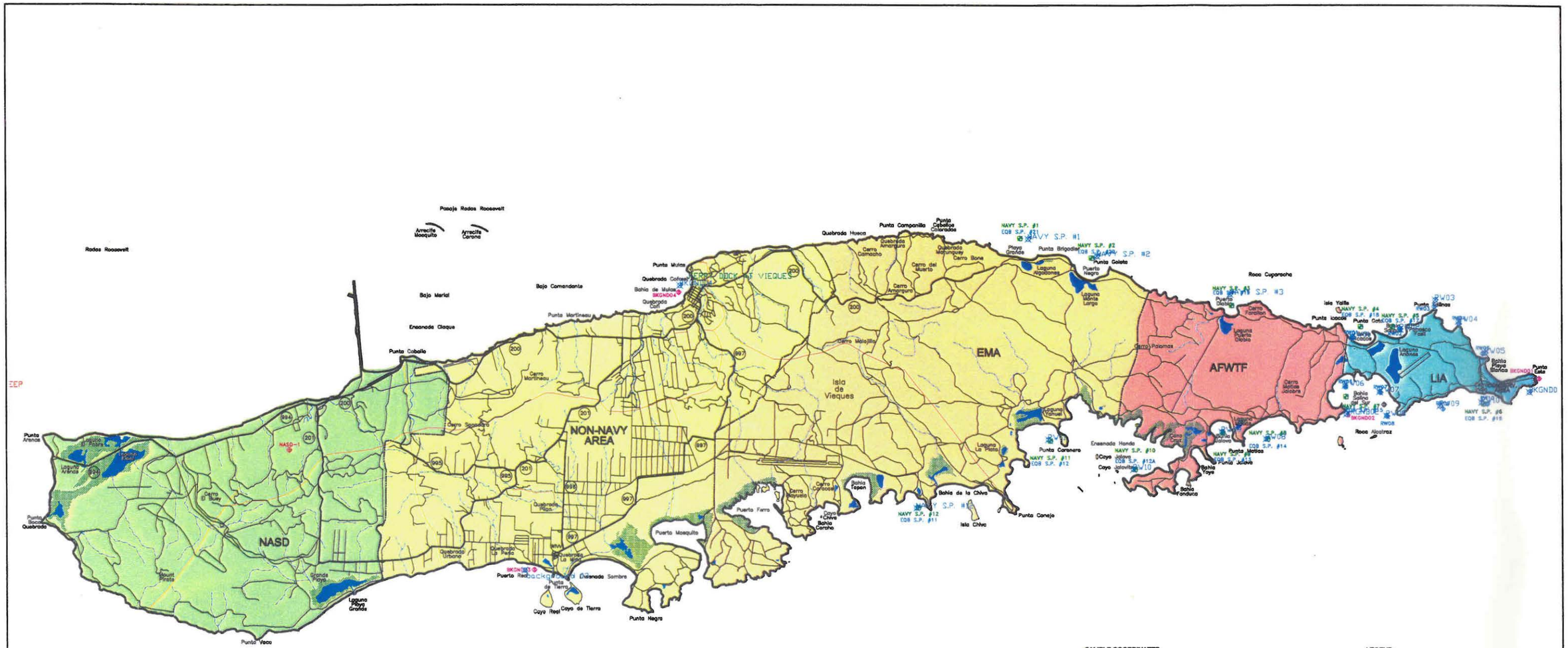

SAMPLE COORDINATES

SAMPLE ID	EASTING	NORTHING
NAVY S.P. #1	248757.85	2009669.17
NAVY S.P. #2	250322.18	2009240.45
NAVY S.P. #3	253423.96	2008199.71
NAVY S.P. #4	256250.87	2007739.24
NAVY S.P. #5	256949.66	2007739.24
NAVY S.P. #6	259003.15	2005942.48
NAVY S.P. #7	255922.14	2006204.47
NAVY S.P. #8	254209.00	2005274.85
NAVY S.P. #9	253224.35	2005401.88
NAVY S.P. #10	251270.92	2004607.96
NAVY S.P. #11	249400.45	2005227.05
NAVY S.P. #12	246507.55	2003764.77
RW01	258071.89	2007488.26
RW02	257111.68	2007698.73
RW03	257872.03	2008176.22
RW04	258417.94	2007807.42
RW05	258939.55	2007153.33
RW06	255913.12	2006413.88
RW07	256682.97	2006295.94
RW08	256831.97	2005774.53
RW09	258055.04	2005935.92
RW10	258949.05	2006047.65
BKGND01	260170.96	2008611.52
BKGND02	255974.37	2005801.52
BKGND03	238033.16	2002391.76
BKGND04	241247.03	2008480.49
DEPTH SPOT	258757.47	2008035.24

COORDS ARE IN UTM ZONE 20, NAD 83

LEGEND

- SHORELINE
- STATE ROUTE
- SECONDARY ROAD
- STREAM
- DISTRICTS
- MARSH
- NASD - NAVAL AMMUNITION SUPPLY DEPOT
- NON-NAVY OWNED LAND
- EMA - EASTERN MANEUVER AREA
- AFWTF - ATLANTIC FLEET WEAPONS TRAINING FACILITY
- LIA - LIVE IMPACT AREA
- CONSERVATION AREA

CWA/NPDES SAMPLE LEGEND

- NAVY S.P. #4 — NAVY SAMPLE LOCATION (JUNE 17, 1999)
- EQB S.P. #18 — EQB SAMPLE LOCATION (JUNE 17, 1999)
- RW01 — BACKGROUND SAMPLE LOCATION (JUNE 11, 1999)
- BKGND01 — PROPOSED BACKGROUND SAMPLE LOCATION
- PROPOSED DEPTH MEASUREMENT

NAVY NUMBERING IS CHRONOLOGICALLY. EQB HAD ALREADY NUMBERED THEIR LOCATIONS FOR SAMPLING.
SAMPLING LOCATIONS (S.P.) ARE AS FOLLOWS IN CHRONOLOGICAL ORDER: PLAYA GRANDE (1), PUERTO NEGRO (2), PUERTO DIABLO (3), BAHIA ICACOS (4), BAHIA SALINAS (5), SHORE LINE SOUTH OF CERRO INDIO (6), BAHIA SALINAS DEL SUR (7), SOUTH EAST OF LAGUNA MATIAS (8), BAHIA JALOVA (9), ENSENADA HONDA WEST OF CAYO JALOVITA (10), ENSENADA HONDA WEST OF CAYO YANUEL (11), AND BETWEEN THE PENINSULA (LOCATED WEST OF BAHIA CHIVA) AND BAHIA TAPON (12).

0 400 1200 2000
1 CM = 400 M

REVISIONS		NORTH		VIEQUES ISLAND PUERTO RICO	Baker	CWA/NPDES SAMPLE LOCATION MAP	FIGURE
	DRAWN GLB REVIEWED REB S.O.# 28007-139-0000 CADD# 2138012V			BAKER ENVIRONMENTAL, Inc. Coraopolis, Pennsylvania		SCALE AS SHOWN / DATE JUNE, 2000	1

Figure 4-1
Vieques Island Clean and Conventional Field Sampling Program
U.S. Navy LANTDIV, Norfolk, Virginia

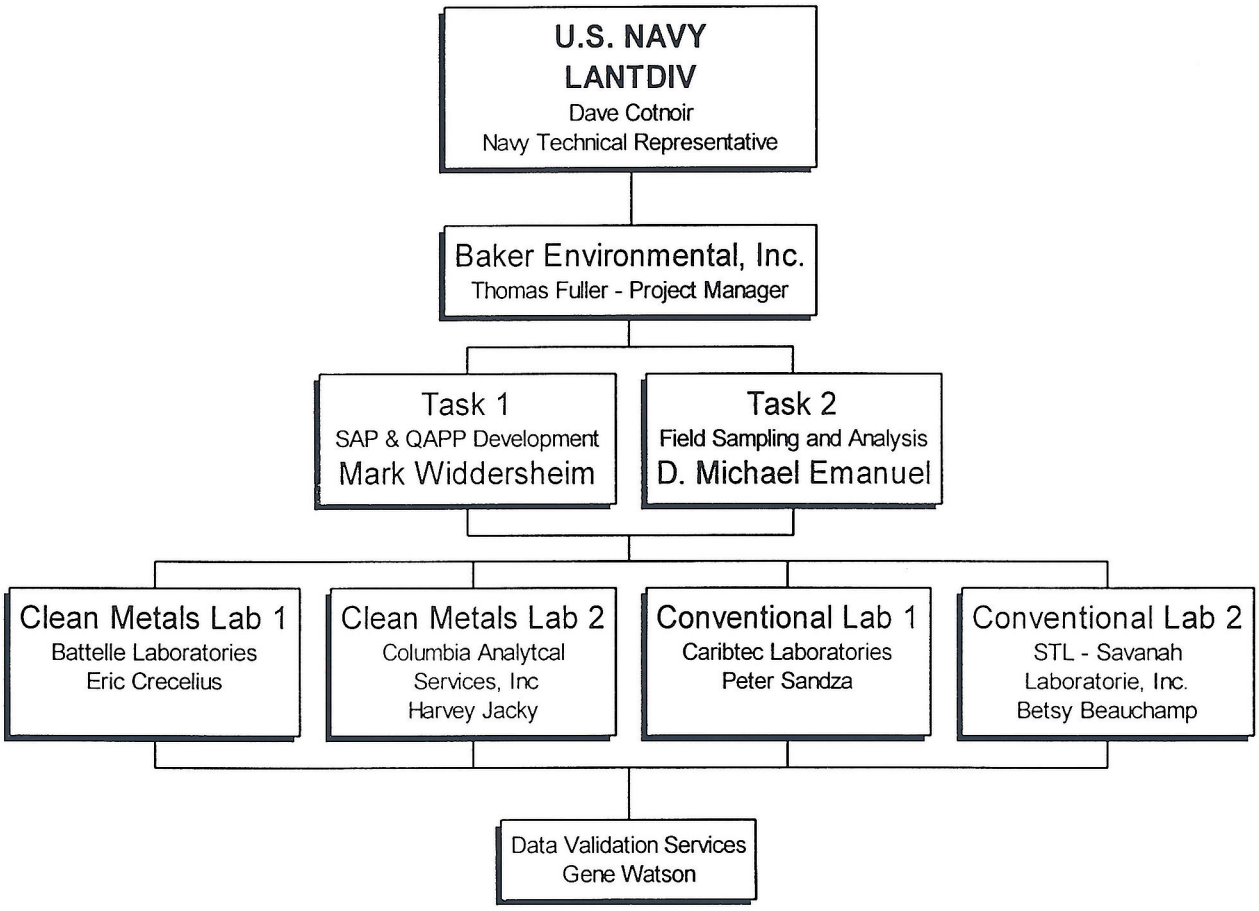

APPENDIX A
PUERTO RICO ENVIRONMENTAL QUALITY BOARD REQUIREMENTS

Title: Information to be submitted to the Environmental Quality Board Land Pollution Control Area for the Sampling and Analysis Activities

Prepared by: Waldemar Natalio Flores Flores
Waldemar Natalio Flores Flores
Quality Assurance Officer
Land Pollution Control Area
PR EQB, Hato Rey, Puerto Rico

Revised and Approved by: Waldemar Natalio Flores Flores
Waldemar Natalio Flores Flores
Quality Assurance Officer
Land Pollution Control Area
PR EQB, Hato Rey, Puerto Rico

Juan Ramos Aponte
Juan Ramos Aponte
Quality Assurance Officer
Land Pollution Control Area
PR EQB, Hato Rey, Puerto Rico

Concurred by Flor L. del Valle López
Flor L. del Valle López
Director
Land Pollution Control Area
PR EQB, Hato Rey, Puerto Rico

INFORMATION TO BE SUBMITTED TO THE ENVIRONMENTAL QUALITY BOARD LAND POLLUTION CONTROL AREA FOR THE SAMPLING AND ANALYSIS ACTIVITIES

I. Sampling Plan:

A. Background information collected during the preliminary assessment

B. Objectives and goals of the investigation including parameters to be analyzed and the rationale for their selection

C. Sampling methods:

1. Strict compliance with complete, detailed and thorough Standard Operating Procedures (SOPs) are required for:

a. Preparation of containers, equipments, devices, materials, reagents, preservation, storage items, etc., including manufacturers, models and specifications

b. Maintenance, calibration, cleaning of containers, equipments, devices, materials, reagents, preservation, storage items, etc.

c. Samples preservation, packing, marking, labeling, shipping, transportation and chain of custody

d. Health and safety protocols, including the safety equipment and decontamination procedures SOPs

e. Sampling methods

D. Justification and rationale for selected methods and procedures

E. Samples and subsamples:

1. Sampling strategy:

   a. Simple random, stratified random, systematic random or authoritative

   b. Stratification levels

2. Sampling techniques:

   a. Composite or grab

3. Type of samples:

   a. Environmental or hazardous

4. Number and size

5. Accuracy and precision:

   a. Trip blanks and equipment blanks

   b. Field blanks

   c. Field duplicates

   d. Field spikes

   e. Split samples

   f. Field decontamination blanks

F. Maps and photographs of sampling point sites

G. Organization, training, curriculum vitae and list with signatures of sampling team members and supervisors

H. Site Health and Safety Plan

I. Additional site specific information or requirements

J. Sampling Plans must be prepared, revised, approved and concurred by a qualified personnel with technical background and experience in the activities to be performed; name, signature and curriculum vitae of those personnel must be included

II. Chain of Custody:

A. Complete and detailed documentation, information and protocols of the chain of custody, including the actual hour, minute and date of each sampling phase activity (collection, preservation, storage, shipping, transportation, arrival to the laboratory) and each laboratory phase of the analyses

B. Complete and detailed sample labels, sample seals, field logbooks and sample analyses request sheets information of forms to be used and the ones used in the corresponding sampling activities

III. Analytical Activities:

A. Complete, detailed, thorough description of the SOPs of the methodologies of analyses used. This will not be limited to reference the Test Methods for Evaluating Solid Waste, Physical/Chemical Methods SW-846 Manual (latest edition) or any other references. The SOPs in actual use are needed for the whole analyses process activities. This will include but not limited to:

1. Laboratory chain of custody methodology

2. Preservation and holding time methodologies

3. Glassware cleaning, interferences detection, corrective actions, reagents purification and preparation methodologies

4. Glassware, equipments, devices, materials, including models and specifications of them and the reagents

5. Samples preparation for analyses methodologies such as weighing, digestion, dissolution, extraction, cleanup, etc.

6. Standards and solutions preparation methodologies

7. Tuning, alignment, calibration, standard curve, identification and quantification methodologies

8. Precision and accuracy methodologies

9. Data reduction and reporting methodologies for calculation procedures

B. Analytical quality control must be performed:

1. Spikes, blanks and duplicates:

a. Duplicate spike or split spiked samples

b. Reagent blanks

c. Surrogate compound spikes:

1. Blanks

2. Standards

3. Samples

4. Matrix spikes/matrix duplicates

d. Check samples

2. Clean up:

a. Column check samples

b. Column check samples blanks

C. Method detection limits, method quantification limits and practical quantification limits must be performed for each parameter

D. Quality control documentation adapted from Test Methods for Evaluating Solid Waste, Physical/Chemical Methods SW-846 third edition, chapter one forms and additional information to be submitted for validation, if not included in chapter one forms:

1. Analytical results:

   a. Analyte concentration

   b. Sample weight

   c. Percent water (from non aqueous sample when specified)

   d. Final volume of extract or diluted sample

   e. Holding time

2. Calibrations:

   a. Calibration curve or coefficients of the linear equation which describes the calibration curve

   b. Correlation coefficient of the linear calibration

   c. Concentration/response data or relative response data of the calibration check standards, along with dates on which they were analytically determined

3. Column checks:

   a. Results of column chromatography checks with the chromatogram

4. Extractions/digestions:

   a. Date of extraction and digestion for each sample

5. Surrogates:

   a. Amount of surrogate spiked, and percent recovery of each surrogate

6. Matrix/duplicate spikes:

   a. Amount spiked, percent recovery and relative percent difference for each compound in the spiked samples for the analytical batch

7. Check samples:

   a. Amount spiked and percent recovery of each compound spiked

8. Blanks:

   a. Identity and amount of each constituent

9. Chromatograms:

   a. All chromatograms for reported results properly labeled with:

      1. Sample identification

      2. Method identification

      3. Identification of retention time

10. Quantitative chromatogram reports:

    a. Retention time of analyte

    b. Amount injected

    c. Area of appropriate calculation of detection response

    d. Amount of analyte found

    e. Date and time of injection

11. Mass spectrums:

    a. Spectra of standards generated from authentic standards (one for each report for each compound detected)

    b. Spectra of analytes from actual analyses

    c. Spectrometer identifier

12. Metal interference check samples results

13. Detection limits:

    a. Analyte detection limits with methods of estimation

14. Results of standard additions

15. Results of serials dilutions

16. Instrument detection limits

17. ICP interelement correction factors and ICP linear ranges

E. Complete, detailed, legible and properly identified copies of all charts, standard curves, graphs, strip chart recorders graphic outputs, raw data calculations methodologies in the qualitative and quantitative determination of the parameters analyzed for each analytical stage and other pertinent computations

F. Data generated must be signed by each laboratory personnel that performed analyses and supervision activities, validated by the Quality Assurance Officer, Manager and Data Quality Review Officer or equivalent; their curriculum vitae must be included for all those laboratory personnel

G. All parameters results must be officially sealed and signed by qualified chemists licensed by the Commonwealth of Puerto Rico, including their curriculum vitae

IV. Statistical Analysis and Validation:

A. The analysis and validation of the results will include, but not be limited to:

1. Regulatory threshold
2. Individual measurements of variables
3. Population mean or true mean
4. Sample mean
5. Variance
6. Standard deviation
7. Standard error or standard error of mean or standard deviation of the mean
8. Confidence interval or probability level and limits
9. Appropriate number of samples to be collected
10. Degrees of freedom
11. Probable error rate of Student T Value
12. Delta value
13. Square Root Transformation or Arcsin Transformation or any other if needed

B. Statistical Analysis and Validation must be performed by a qualified individual with technical background and experience in the activities to be performed; name, signature and curriculum vitae must be included

idg

APPENDIX B
GUIDELINES FOR INORGANIC DATA REVIEW

HEARTLAND
ENVIRONMENTAL SERVICES, INC.

October 20, 1999

Mr. Tom Fuller
Baker Environmental Corporation
420 Rouser Road, AOP #3
Coraopolis, PA 15108

Dear Mr. Fuller:

Per our conversation, please find attached Heartland ESI's Standard Operating Procedures (SOPs); "Guidelines for Inorganic Data Review, SW846 Methods 6010, 7000 Series, 9010 & EPA Cyanide Methods, and Trace Metals" and "Guidelines for Data Review, SW846 Methods Wet Chemistry Parameters".

Although the inorganic SOP is written for the SW846 methods, the inorganic analytical methods (1600 series and 200 series) requested for the AFTWF Pre-exercise Sampling at Vieques Island, Puerto Rico can be easily adapted to our data validation and review procedure. Each analytical method identified in the Scope of Work and QAPP for the sampling event will be evaluated, where applicable, for the following:

- Chain of Custody
- Analytical results (Form 1s)
- Calibration Standards Data
- Calibration and Preparation Blank Data
- Interference Check Standard Data
- MS/MSD Data
- Duplicate Data
- LCS Data
- Standard Additions Data
- Serial Dilution Data
- Analytical Sequence Data

4127 Plaza 94 South • St. Charles, MO 63304
(636) 936-1332 • Fax (636) 936-1335

In most instances, the Heartland ESI SOP will not reflect the correct QA/QC control limits of the methods utilized by Baker; therefore, method specific QA/QC control limits will be employed in the review and validation of the analytical data. Each method implemented by the four laboratories will be reviewed for similarities and differences. After all differences have been identified, review and validation procedures will be put into place to insure that the data validation for the different analytical methods will be as consistent as possible with each other and that all results will reflect the continuity of the validation.

If you have any questions or require additional information, please contact me at your earliest convenience. Thank you for choosing Heartland ESI for your validation needs.

Sincerely,

Eugene M. Watson

GUIDELINES FOR INORGANIC DATA REVIEW
SW-846 METHODS 6010, 7000 SERIES, 9010 & EPA Cyanide Methods, and Trace Metals
DQO LEVEL IV DATA PACKAGES

Data Deliverables Required:

- Case Narrative
- Chain of Custody
- Form 1s
- Form 2A - Calibration Standards Data
- Form 3 - Calibration and Preparation Blank Data
- Form 4 - Interference Check Standard Data
- Form 5 - Matrix Spike/Matrix Spike Duplicate Data
- Form 6 - Duplicate Data
- Form 7 - Laboratory Control Standard Data
- Form 8 - Standard Addition Data
- Form 9 - Serial Dilution Data
- Form 10 - 13 - Quarterly Required Data (Documentation only)
- Form 14 - Runlog Data

(Equivalent Forms are acceptable providing all of the required information is presented)

Review Requirements:

- Raw Data Verification
- Holding Times
- Initial and Continuing Calibration percent recoveries
- Method and Calibration Blank contamination and sample associations
- MS/MSD recoveries and RPDs
- Laboratory Control Standard recoveries
- Post-digestion results for GFAA
- Serial Dilution RPDs
- Samples results

Holding Times

Review items: Form Is and Sample Chain of Custody

Criteria: Verify the sample holding time based on the time of collection to the time of analysis.

Holding Times - continued

Technical holding times for water and soils samples are as follows:

Metals:	180 days
Mercury:	28 days
Cyanide:	14 days

All samples must be preserved.

Action: If the samples holding times were exceeded, qualify/reject the samples based on the following guidance:

Mercury and Cyanide

1) 1 Day - 5 Days

   a) Positive and non detect results are qualified as estimated, J/UJ.

2) >5 Days

   a) Positive results are qualified as estimated, J, and non-detect results are rejected, R.

TAL Metals

1) >1 Day

   a) Positive and non detect results are qualified as estimated, J/UJ.

Calibration Standards Results

Review items: Form IIA

Criteria: Verify the initial and calibration standards are acceptable.

6010 & Trace	90% - 110%
7000 series	80% - 120%
Cyanide	85% - 115%

Calibration Standards Results - continued

Action: 6010 & Trace

1) If the percent recovery is greater than 125%:

   a) Reject, R, the positive results for the non compliant element.

2) If the percent recovery is greater than 110%, but less than 125%:

   a) Qualify all positive results for the non compliant element as estimated, J.

3) If the percent recovery is below 90%, but greater than 75%:

   a) Qualify all positive and non detect results for the non compliant element as estimated, J/UJ.

4) If the percent recovery is less than 75%:

   a) Reject, R, the positive and non detect results for the non compliant element.

7000 series

1) If the percent recovery is greater than 140%:

   a) Reject, R, the positive results for the non compliant element.

2) If the percent recovery is greater than 120%, but less than 140%:

   a) Qualify all positive results for the non compliant element as estimated, J.

3) If the percent recovery is less than 80%, but greater than 60%:

   a) Qualify all positive and non detect results for the non compliant element as estimated, J/UJ.

Calibration Standards Results - continued

4) If the percent recovery is less than 60%:

a) Reject (R) the positive and non detect results for the non compliant element.

9010 - Cyanide

1) If the percent recovery is greater than 135%:

a) Reject, R, the positive results for the non compliant element.

2) If the percent recovery is greater than 115%, but less than 135%:

a) Qualify all positive results for the non compliant element as estimated, J.

3) If the percent recovery is below 85%, but greater than 65%:

a) Qualify all positive and non detect results for the non compliant element as estimated, J/UJ.

4) If the percent recovery is less than 65%:

a) Reject, R, the positive and non detect results for the non compliant element.

Blanks (Method, Field QA, and Calibration)

Review items: Form III

Criteria: Verify that a method blank has been analyzed for sample extraction lot. All method blanks should be free of contamination. If a problem exists with any blank, all associated samples must be evaluated to determine whether there is inherent variability in the data or if the problem is an isolated occurrence not affecting other data.

Action:

1. If an analyte is found in the blank but not in the associated sample(s), no action is required.

Blanks (Method, Field QA, and Calibration) - continued

2. Any analyte result that is detected at a concentration greater than the IDL but less than five times (5X) the concentration detected in any blank will be qualified as non-detect, U. Any positive analyte result that is found at a concentration greater than five times (5X) the concentration detected in any blank will not be qualified.

3. The reviewer should take note that the blank analysis may not involve the same weights, volumes, or dilution factors such as associated samples. These factors must be taken into consideration when applying the 5X blank criteria.

4. The validator must review the field QA blank, including trip, rinseate, and field blanks and all associated samples. Apply the same data validation guidelines used in assessing the method blanks.

5. Qualification/Action Codes for Blanks:

   U: The sample result is greater than the IDL and less than five times (5X) the blank value. Qualify the sample result as non detect, U.

   No Action: The sample result is greater than the IDL and greater than five times (5X) the blank value

Matrix Spike/ Matrix Spike Duplicate Results

Review items: Form V

Criteria: Spike recovery must be within the recovery limits of 75% to 125%. Spike recovery limits do not apply when sample concentration exceeds the spike concentration by a factor of 4 time or more (>4X).

Action:

1) If the percent recovery is greater than the upper control limit (125%):
   a) Qualify all positive results for the non compliant element as estimated, J.

Matrix Spike/ Matrix Spike Duplicate Results, continued

2) If the percent recovery is less than 75%, but greater than 30%:

   a) Qualify all positive and non detect results for the non compliant element as estimated, J/UJ.

3) If the percent recovery is less than 30%:

   a) Reject, R, the non detect results for the non compliant element and qualify positive results as estimated, J.

Duplicate Results

Review items: Form VI

Criteria: If the reported samples results are greater than five times (5X) the CRDL: the Duplicate RPD must be less than 20% for water samples and 35% for soils.

If one or both of the reported sample results are less than five times (5X) the CRDL: the sample difference must be less than the CRDL for water samples and less than two times (2X) the CRDL for soils samples.

Action: All positive results for the elements are qualified as estimated, J, when the RPD criteria has been exceeded.

Laboratory Control Standards Results

Review items: Form VII

Criteria: Water Samples:

LCS recovery must be within the recovery limits of 80% to 120%.

Soil Samples:

LCS recovery must be within the EPA soil control limits (vary element to element).

Action: Water Samples

Laboratory Control Standards Results, continued

1) If the percent recovery is greater than the upper control limit, 120%:

   a) Qualify all positive results for the non compliant element as estimated, J.

2) If the percent recoveries are below 80%, but greater than 50%:

   a) Qualify all positive and non detect results for the non compliant element as estimated, J/UJ.

3) If the percent recovery is less than 50%:

   a) Reject, R, the positive and non detect results for the non compliant element.

Soil Samples

1) If the percent recovery is greater than the upper control limit:

   a) Qualify all positive results for the non compliant element as estimated, J.

2) If the percent recovery is below the lower control limits

   a) Qualify all positive and non detect results for the non compliant element as estimated, J/UJ.

Interference Check Standard Results

Review items: Form IV

Criteria: All Samples:

The interference check standard recovery must be within the recovery limits of 80% to 120%.

Action: All Samples

Interference Check Standard Results, continued

1) If the percent recovery is greater than the upper control limit, 120%:

   a) Qualify all positive results for the non compliant element as estimated, J.

2) If the percent recoveries are below the lower control limits, 80%:

   a) Qualify all positive and non detect results for the non compliant element as estimated, J/UJ.

Serial Dilution Results

Review items: Form IX

Criteria: All Samples:

Serial Dilution RPDs must be within the recovery limits of ±10%.

Action: All Samples

1) If the RPD is greater than 10%:

   a) Qualify all positive results for the non compliant element as estimated, J.

Raw Data Verification

Review items: Form 1, Form 14, and raw data

Criteria: All Samples:

Verify that the results reported on the Form Is reflect the results as reported in the raw data.

Action: All Samples

1) If the raw data does reflect what has been reported on the FormIs, notify the contractor and the laboratory for immediate

Raw Data Verification, continued

correction.

Post Digestion Spike Results

Review items: Form VIII and raw GFAA Data

Criteria: Verify that a post-digestion Spiking was performed for all GFAA elements.

7000 series 85% - 115%

Action: 7000

1) If the percent recovery is greater than 115%:

   a) Qualify, J, the positive results for the non compliant element.

2) If the percent recovery is below 85%:

   a) Qualify all positive and non detect results for the non compliant element as estimated, J/UJ.

GUIDELINES FOR INORGANIC DATA REVIEW
SW-846 METHODS WET CHEMISTRY PARAMETERS
DQO LEVEL IV DATA PACKAGES

Data Deliverables Required:

- Case Narrative
- Chain of Custody
- Form 1s
- Form 2A - Calibration Standards Data (where applicable)
- Form 3 - Calibration and Preparation Blank Data (where applicable)
- Form 5 - Matrix Spike/Matrix Spike Duplicate Data (where applicable)
- Form 6 - Duplicate Data (where applicable)
- Form 7 - Laboratory Control Standard Data (where applicable)

(Equivalent Forms are acceptable providing all of the required information is presented)

Review Requirements:

- Raw Data Verification
- Holding Times
- Initial and Continuing Calibration percent recoveries (where applicable)
- Method and Calibration Blank contamination and sample associations (where applicable
- MS/MSD recoveries and RPDs (where applicable)
- Laboratory Control Standard recoveries (where applicable)
- Sample results

Holding Times

Review items: Form 1s and Sample Chain of Custody

Criteria: Verify the sample holding time based on the time of collection to the time of analysis.

Technical holding times for water and soils samples vary depending on the method. Refer to specific method for holding time requirements.

All samples must be preserved if required by the method.

Action: Qualification/rejection of the sample results is determined on a method

Holding Times, continued

by method basis.

Calibration Standards Results

Review items: Form IIA, where applicable

Criteria: Verify the initial and continuing calibration standards are acceptable.

Wet Chemistry 80% - 120%

Action:

1) If the percent recovery is greater than 120%:

   a) Qualify all positive results for the non compliant element as estimated, J.

2) If the percent recovery is less than 80%:

   a) Qualify all positive and non detect results for the non compliant element as estimated, J/UJ.

Blanks (Method, Field QA, and Calibration)

Review items: Form III, where applicable

Criteria: Verify that a method blank has been analyzed for sample lot. All method blanks should be free of contamination. If a problem exists with <u>any</u> blank, all associated samples must be evaluated to determine whether there is inherent variability in the data or if the problem is an isolated occurrence not affecting other data.

Action:

1. If an analyte is found in the blank but not in the associated sample(s), no action is required.

2. Any analyte result that is detected at a concentration greater than the IDL but less than five times (5X) the concentration detected in any blank will be qualified as non-detect, U. Any positive analyte result that is found at a concentration greater than five times (5X) the concentration detected in any blank will not be qualified.

Blanks (Method, Field QA, and Calibration), continued

3. The reviewer should take note that the blank analysis may not involve the same weights, volumes, or dilution factors such as associated samples. These factors must be taken into consideration when applying the 5X blank criteria.

4. The validator must review the field QA blank, including trip, rinseate, and field blanks and all associated samples. Apply the same data validation guidelines used in assessing the method blanks.

5. Qualification/Action Codes for Blanks:

   U: The sample result is greater than the IDL and less than five times (5X) the blank value. Qualify the sample result as non detect, U.

   No Action: The sample result is greater than the IDL and greater than five times (5X) the blank value

Matrix Spike/ Matrix Spike Duplicate Results

Review items: Form V, if applicable

Criteria: Spike recovery must be within the recovery limits of 75% to 125%. Spike recovery limits do not apply when sample concentration exceeds the spike concentration by a factor of 4 time or more (>4X).

Action:

1) If the percent recovery is greater than 125%:
   a) Qualify all positive results for the non compliant analyte as estimated, J.

2) If the percent recovery is less than 75%, but greater than 30%:
   a) Qualify all positive and non detect results for the non compliant analyte as estimated, J/UJ.

3) If the percent recovery is less than 30%:
   a) Reject, R, the non detect results for the non compliant

Matrix Spike/ Matrix Spike Duplicate Results, continued

analyte and qualify positive results as estimated, J.

Duplicate Results

Review items: Form VI, if applicable

Criteria: The Duplicate RPD must be less than 20% for water samples and 35% for soils.

Action: All positive results for the analytes are qualified as estimated, J, when the RPD criteria has been exceeded.

Laboratory Control Sample Results

Review items: Form VII, if applicable

Criteria: Water Samples:

LCS recovery must be within the recovery limits of 80% to 120%.

Soil Samples:

LCS recovery must be within the statistically determined laboratory control limits.

Action: Water Samples

1) If the percent recovery is greater than 120%:

   a) Qualify all positive results for the non compliant analyte as estimated, J.

2) If the percent recoveries are below 80%:

   a) Qualify all positive and non detect results for the non compliant analyte as estimated, J/UJ.

Soil Samples

Laboratory Control Sample Results, continued

1) If the percent recovery is greater than the upper control limit:

   a) Qualify all positive results for the non compliant analyte as estimated, J.

2) If the percent recovery is below the lower control limits

   a) Qualify all positive and non detect results for the non compliant analyte as estimated, J/UJ.

Note: For LCS recoveries which are not within the QC limits: this indicates an out of control situation for which corrective action, i.e., re-analysis of the samples, should have be taken by the laboratory.

Raw Data Verification

Review items: Form 1 and raw data

Criteria: All Samples:

Verify that the results reported on the Form Is reflect the results as reported in the raw data.

Action: All Samples

1) If the raw data does reflect what has been reported on the Form Is, notify the contractor and the laboratory for immediate correction.

APPENDIX C
STATISTICAL EVALUATIONS

Statistical Evaluation of Background Data

A total of 18 background surface water samples were collected and analyzed for conventional parameters including ammonia, sulfide, fluoride, nitrate, nitrite, oil & grease and recoverable phenolics. Of these 18 samples, 16 were analyzed for inorganic constituents including arsenic, barium, boron, cadmium, chromium, copper, iron, lead, manganese, mercury, selenium, silver and zinc. Inorganic data were evaluated using methods presented in the Handbook For Statistical Analysis Of Environmental Background Data (Naval Facilities Engineering Command, 1999). This statistical assessment focuses on underlying distributions and corresponding summary statistics for each aforementioned inorganic constituents.

Data were first subjected to the Shapiro-Wilk W-Test. The W-Test is recommended in several USEPA guidance documents to determine whether data are derived from an underlying normal distribution. Table 1 presents the results for total (unfiltered) background sample data. The lognormal W-Test was conducted by log-transforming analytical data results.

Table 1
Initial Evaluation of Underlying Distributions
Shapiro-Wilk W-Test
Total Inorganic Constituents

Constituent	Lognormal W	Quantile	H_o	Normal W	Quantile	H_o	n
arsenic	0.9777	0.887	T	0.9783	0.887	T	16
barium	0.9682	0.887	T	0.9705	0.887	T	16
boron	0.7290	0.887	F	0.7248	0.887	F	16
cadmium	0.8459	0.887	F	0.7875	0.887	F	16
chromium	0.9546	0.887	T	0.9398	0.887	T	16
copper	0.5901	0.887	F	0.4368	0.887	F	16
iron	0.2727	0.887	F	0.2727	0.887	F	16
lead	0.6687	0.887	F	0.4517	0.887	F	16
manganese	0.7872	0.887	F	0.5695	0.887	F	16
mercury	0.9498	0.887	T	0.8669	0.887	F	16
silver	0.5145	0.887	F	0.4774	0.887	F	16
zinc	0.8220	0.887	F	0.8674	0.887	F	16
ammonia	0.7400	0.887	F	0.8245	0.887	F	16
sulfide[1]	1.0134	0.887	T	1.558	0.887	T	10
fluoride	0.9144	0.887	T	0.9051	0.887	T	16
oil & grease	0.5066	0.887	F	0.4997	0.887	F	16

Notes:
[1] - Battelle sulfide method. Used on only 10 samples.
Ho – Null Hypothesis. Ho: the data were obtained from the Normal or Lognormal Distribution. If W > Quantile, then accept the null hypothesis as true (T). If W < Quantile, then reject the null hypothesis.
n – number of background samples.

The W-Test for total inorganic and detected conventional analytical results indicate that arsenic, barium, chromium, sulfide and fluoride are normally distributed. Mercury appears to be lognormally distributed , but the coefficient of variance (CV) is relatively low for this constituent. If CV values for inorganics identified as lognormally distributed are less than 0.5, the W-Test may not be capable of detecting non-normality. Therefore, an assumption of lognormality may not be appropriate. The remaining analytes are neither normally nor lognormally distributed. **{Forgot to delete this when we moved discussion of outliers.}**

Table 2 presents W-Test results for dissolved (filtered) background sample results. Again, arsenic, barium and chromium are normally distributed. Copper appears to be lognormally distributed, but the CV for copper is below 0.5. Iron, manganese, mercury and silver are not normally nor lognormally distributed.

Table 2
Initial Evaluation of Underlying Distributions
Shapiro-Wilk W-Test
Dissolved Inorganic Constituents

Constituent	Lognormal W	Quantile	H_o	Normal W	Quantile	H_o	n
arsenic	0.9705	0.887	T	0.9792	0.887	T	16
barium	0.9240	0.887	T	0.9264	0.887	T	16
boron	0.7522	0.887	F	0.7505	0.887	F	16
cadmium	0.9629	0.887	T	0.7135	0.887	F	16
chromium	0.9220	0.887	T	0.9180	0.887	T	16
copper	0.8842	0.887	T	0.8214	0.887	F	16
iron	0.5040	0.887	F	0.5101	0.887	F	16
lead	0.7341	0.887	F	0.5104	0.887	F	16
manganese	0.8715	0.887	F	0.7376	0.887	F	16
mercury	0.8205	0.887	F	0.6444	0.887	F	16
silver	0.5815	0.887	F	0.5791	0.887	F	16
zinc	0.8151	0.887	F	0.9603	0.887	T	16

Notes:
Ho – Null Hypothesis. Ho: the data were obtained from the Normal or Lognormal Distribution. If W > Quantile, then accept the null hypothesis as true (T). If W < Quantile, then reject the null hypothesis.

n – number of background samples.

Evaluation of Outliers

A closer examination of data suggests that the results for dissolved and total inorganics appearing to be neither normally nor lognormally distributed may be skewed by results for background sample BKGND-04. This sample contains concentrations of iron, lead, manganese and mercury that range from two to twenty-five times that of other background samples.

To determine whether data for sample BKGND-04 should be removed from the data set, the Dixon Test was conducted. The Dixon Test was used because the background data set contained fewer than 25 samples and without the results of background sample BKGND-04, data may be normally distributed. The test was conducted at the 95% confidence interval. Results of the Dixon Test indicate that analytical results for this sample are possibly statistical outliers. Results of the W-Test, Dixon Test and descriptive statistics are presented in Attachment A.1.

Total Inorganic Results

Sample BKGND-04 was removed from the data set because concentrations of inorganics detected in this sample appear to be elevated with respect to other background sample analytical results. Table 3 presents the results of the W-Test using censored data that differ from results of the non-censored data set. If BKGND-04 is censored from the total inorganic results, copper is normally distributed and manganese is lognormally distributed.

Table 3
Evaluation of Underlying Distributions – Censored Data
Shapiro-Wilk W-Test
Total Inorganic Constituents

Constituent	Lognormal W	Quantile	H_0	Normal W	Quantile	H_0	n
copper	0.9440	0.881	T	0.9672	0.881	T	15
manganese	0.9358	0.881	T	0.8549	0.881	F	15

Notes:
Results for constituents where distributions become apparent after censoring.

However, the CV for manganese is below 0.5. Inorganics like manganese that appear to be lognormally distributed should be further evaluated using nonparametric statistics because constituents having relatively low CV values are insufficient to support a finding of lonormality using the W-Test.

Based on the results of the W-Test for uncensored and censored data sets, the following constituents are normally distributed:

Arsenic, Barium, Chromium, Copper, Fluoride, and Sulfide.

The arithmetic average can be used as a measure of central tendency for these constituents in the background data set.

Distributions could not be ascertained for the following chemicals using the W-Test:

Ammonia, Boron, Cadmium, Iron, Lead, Manganese, Mercury, Oil & Grease, Silver and Zinc.

These constituents exhibited characteristics in their respective data sets that require nonparametric statistical interpretation and possibly stratification of sample locations. Therefore, the arithmetic average should not be used as a measure of central tendency for these constituents in the background data set. Selenium, chromium VI, nitrate/nitrite, and phenolics were not detected in total background samples.

Dissolved Inorganic Results

Sample BKGND-04 was also removed from the dissolved data set because concentrations of inorganics detected in this sample may be elevated with respect to other dissolved background sample analytical results. Table 4 presents W-Test results for censored dissolved inorganics that differ from the uncensored data set.

Table 4
Evaluation of Underlying Distributions – Censored Data
Shapiro-Wilk W-Test
Dissolved Inorganic Constituents

Constituent	Lognormal W	Quantile	H_0	Normal W	Quantile	H_0	n
lead	0.9103	0.881	T	0.8864	0.881	T	15
manganese	0.9777	0.881	T	0.9585	0.881	T	15

Notes:
Results for constituents where distributions become apparent after censoring.

Dissolved inorganics that have underlying normal distributions in the censored data set include:

Arsenic, Barium, Chromium, Lead, Manganese and Zinc.

The arithmetic average can be used as a measure of central tendency for these dissolved constituents in the background data set

Distributions could not be ascertained for the following chemicals using the W-Test or a qualitative assessment of the data despite censoring:

Boron, Cadmium, Copper, Iron, Mercury, and Silver.

Therefore, the arithmetic average should not be used as a measure of central tendency for these constituents in the background data set. The constituent selenium was not detected in dissolved background surface water samples and conventional parameters were not analyzed for the filtered sample set.

Censoring background data sets does not suggest that elevated results associated with sample BKGND-04 are anomalous or the result of sampling or laboratory error. This sample must be evaluated to determine whether other potential sources such as commercial boat traffic or storm water outfalls have biased analytical results. BKGND-04 may be an anthropogenic background sample and should be included in any future comparative analysis between site data and background data to rule out non-site related activities as potential sources of contamination. Furthermore, analytical results for sample BKGND-04 should be included for nonparametric statistical analysis that do not require an assumption of underlying data set normality

Background Results vs. Bahia Salina Del Sur Data

In addition to background data, a total of 4 samples was collected from Bahia Salina Del Sur. Both total and dissolved samples were obtained and analyzed for inorganics constituents. These samples were compared to appropriate surface water background data. Table 5 presents the results for total Bahia Salina Del Sur surface water samples and descriptive background statistics for contaminants having normal distributions . Inorganic constituents arsenic and copper exceeded 95% upper confidence interval (UCL) and maximum background sample concentration in one or more Bahia Salina Del Sur surface water samples.

Table 5
Total Analytical Results for Bahia Salina Del Sur Surface Water
Compared to Normally Distributed Background Constituents

Constituent	BKGND-02 ug/L	RW-06 ug/L	RW-07 ug/L	RW-08 ug/L	Background Minimum	Background Maximum	Background Average*	95% UCL
arsenic	1.385	1.110	1.598	1.617	1.004	1.485	1.242	1.30
barium	7.728	7.633	7.661	7.633	7.31	7.822	7.593	7.65
chromium	0.276	0.277	0.293	0.287	0.228	0.317	0.2635	0.2733
copper	0.176	0.188	0.406	0.200	0.121	0.182	0.157	0.165
sulfide(1)	0.00115	0.00166	0.00229	0.00278	0.00133	0.00505	0.0027	0.0033
fluoride(1)	0.6	0.65	0.68	0.65	0.58	0.73	0.6335	0.6493

Notes:
(1) – Units in mg/L
Bolded results exceed Maximum Background
* - Arithmetic Average Calculated one-half of the detection limit value for all non-detects

A One-Tailed T-Test was conducted for normally distributed constituents detected in total Bahia Salina Del Sur surface water samples. Table 6 presents the results of the T-Test analysis, which suggests that arsenic, barium, copper, sulfide and fluoride are similar to background sample data.

Table 6
Results of One-Tailed T-Test
Total Analytical Results for Bahia Salina Del Sur Surface Water
Compared to Normally Distributed Background

Constituent	Bahia Mean (ug/L)	Variance	T-Statistic	Critical T	Accept H_o
arsenic	1.428	0.055864333	0.1112003	2.353	No
barium	7.664	0.002008917	0.0704802	2.353	No
chromium	0.285	0.0000990825	0.0192689	2.353	No
copper	0.242	0.011969877	0.1723680	2.353	No
sulfide(1)	0.00197	0.0000005	0.08754	2.353	No
fluoride(1)	0.645	0.011	0.00036	2.353	No

Notes:
(1) – Results in mg/L.
H_o = (Mean of Bahia Samples – Mean of Background) > 0. If T-Statistic > Critical T: Accept H_o

Copper was detected in three Bahia Salina Del Sur surface water samples in excess of maximum detected total background copper concentrations in samples RW-06, RW-07 and RW-08. However, the T-Test indicates that means for these data sets are similar at the 95% confidence interval.

Table 7 presents the results for dissolved Bahia Salina Del Sur samples and corresponding descriptive background statistics for constituents having an underlying normal distribution.

Table 7
Dissolved Analytical Results for Bahia Salina Del Sur Surface Water
Compared to Normally Distributed Background

Constituent	BKGND-02 ug/L	RW-06 ug/L	RW-07 ug/L	RW-08 ug/L	Background Minimum	Background Maximum	Background Average*	Background 95% UCL
arsenic	1.228	1.290	1.182	1.108	1.053	1.404	1.242	1.283
barium	7.320	7.696	7.312	7.478	7.043	7.591	7.384	7.458
chromium	0.258	0.255	0.253	0.287	0.246	0.302	0.273	0.282
lead	0.0084	0.0079	0.0100	0.0097	0.00724	0.121	0.024	0.038
manganese	0.711	0.726	0.742	0.579	0.437	1.246	0.631	0.714

Notes:
Bolded results exceed Maximum Background
U – Not Detected Above the Specified Concentration
* - Arithmetic Average Calculated one-half of the detection limit value for all non-detects

Barium exceeds the maximum background and upper 95% upper confidence level (UCL) of the arithmetic average concentrations at location RW-06.

Table 8 presents the results of the one sided T-Test conducted on dissolved Bahia Salina Del Sur surface water analytical results compared to background. The T-Test was conducted to determine whether means for dissolved Bahia Salina Del Sur sample data were similar to dissolved background results. Constituents having normal distributions are similar to background, suggesting that their presence is naturally occurring. Iron, selenium and zinc were not detected in dissolved Bahia Salina Del Sur surface water samples.

Table 8
Results of One-Tailed T-Test
Dissolved Analytical Results for Bahia Salina Del Sur Surface Water
Compared to Background

Constituent	Bahia Sample Mean (x)	Variance	T-Statistic	Critical T*	Accept H_0
arsenic	1.179	0.0136	0.1110	2.353	No
barium	7.478	0.0324	0.0700	2.353	No
chromium	0.287	0.00026	0.0192	2.353	No
lead	0.0097	0.000001	0.0734	2.353	No
manganese	0.579	0.0056	0.3308	2.353	No

Notes:
H_0 = (Mean of Bahia Samples – Mean of Background) > 0. If T-Statistic > Critical T: Accept H_0
* - Critical T for alpha = 0.05 (95% confidence)

The use of parametric statistics does not provide definite or consistent information for all total and dissolved analytes. Although some constituents appear to be normally distributed, nonparametric statistical analysis is necessary to address those constituents for which an underlying distribution could not be identified using the W-Test.

NONPARAMETRIC STATISTICAL ANALYSIS

Wilcoxon Rank Sum Test

Assuming that background and Bahia Salina Del Sur surface water samples are independent, the Wilcoxon Rank Sum Test was applied to determine whether measurements in the Bahia Salina Del Sur surface water samples are consistently larger than those from the background population. The Wilcoxon Rank Sum Test was selected because data need not be drawn from normal distributions and nondetect values can be used and treated as ties. Background data were assigned as data set n_1 and Bahia Salina Del Sur data were assigned as data set n_2. The following hypothesis test was tested:

H_o : The populations from which the data sets have been drawn have the same mean

versus the alternative hypothesis

H_a : The populations have different means.

A one-tailed test with an alpha level of 0.05 was conducted. The null hypothesis (H_o) is rejected when measurements from n_2 exceed those of population n_1. This is the case when the calculated rank sum Z statistic (Zrs) is less than the negative of the reference Z statistic (Z). For this test a reference Z statistic of 1.645 was selected to represent the 95 percent confidence interval. Tables 9 and 10 present the results of the Wilcoxon Rank Sum Test for total and dissolved analytical results. Because nonparametric statistical tests are independent of underlying data distributions, results from sample BKGND-04 are included in the background data set.

Table 9
Total Background Data versus Bahia Salina Del Sur Data
Wilcoxon Rank Sum Test For Difference in Population Means

Constituent	Zrs	Z	Reject H_o
arsenic	-1.701	1.645	Yes
barium	-1.039	1.645	No
boron	3.024	1.645	No
cadmium	0.378	1.645	No
chromium	-2.079	1.645	Yes
copper	-2.504	1.645	Yes
iron	0.189	1.645	No
lead	0.567	1.645	No
manganese	-1.890	1.645	Yes
mercury	-0.472	1.645	No
selenium	--	--	NA
silver	-3.024	1.645	Yes
zinc	1.890	1.645	No
ammonia	-1.701	1.645	Yes
sulfide	1.273	1.645	No
fluoride	-1.087	1.645	No
oil & grease	0.567	1.645	No

Results of the Wilcoxon Rank Sum Test presented in Table 9 indicate that total Bahia Salina Del Sur surface water samples results for ammonia, arsenic, chromium, copper, manganese and silver are higher than total background concentrations.

Table 10
Dissolved Background Data versus Bahia Salina Del Sur Data
Wilcoxon Rank Sum Test For Difference in Population Means

Constituent	Zrs	Z	Reject H_o
arsenic	0.567	1.645	No
barium	-0.283	1.645	No
boron	3.024	1.645	No
cadmium	0.189	1.645	No
chromium	0.945	1.645	No
copper	-0.094	1.645	No
iron	0.567	1.645	No
lead	1.417	1.645	No
manganese	-1.606	1.645	No
mercury	-0.472	1.645	No
selenium	--	--	NA
silver	-1.512	1.645	No
zinc	2.646	1.645	No

Results of the Wilcoxon Rank Sum Test for dissolved constituents presented in Table 10 suggest that the null hypothesis (i.e., data sets have the same mean) can not be rejected, which indicates that dissolved background data and dissolved Bahia Salina Del Sur surface water data are similar.

Conclusions

Parametric statistics do not provide reliable data concerning the similarities of background surface water data and Bahia Salina Del Sur surface water data for all analytes. The non-parametric Wilcoxon Rank Sum Test was used to determine whether Bahia Salina Del Sur data were similar to background sample data. Results of the Wilcoxon Rank Sum Test suggest that mean concentrations for arsenic, chromium, copper, manganese, silver detected in total Bahia Salina Del Sur surface water samples may be higher than mean background results. However, the Wilcoxon Rank Sum Test indicates that mean concentrations for dissolved Bahia Salina Del Sur surface water results are similar to background mean concentrations for all constituents.

It is possible that the sensitivity of the analytical methods and other factors influencing water chemistry may cause higher total results for some constituents detected in total Bahia Salina Del Sur surface water samples. For example, total arsenic background data, which appear to be normally distributed and generate reliable results using parametric statistics, have a mean concentration of 1.242 ug/L. Total Bahia Salina Del Sur surface water samples have a mean concentration of 1.482 ug/L. The T-Test suggests that these means are not statistically different, yet the Wilcoxon Rank Sum Test indicates that the mean of Bahia Salina Del Sur surface water may be statistically higher than background. Means for background data and Bahia Salina Del Sur surface water data and corresponding results of statistical comparisons are presented in Tables 11 and 12. Table 11 presents a comparison of background means for constituents that exhibit disagreement between the T-Test and the Wilcoxon Rank Sum Test.

Table 11
Comparison of Total Background and Bahia Salina Del Sur Mean Concentrations and Results of Parametric and Nonparametric Statistical Tests

Analyte	Background Mean (ug/L)	Bahia Del Sur Mean (ug/L)	T-Test	WRS Test
arsenic*	1.242	1.482	No	Yes
copper*	0.157	0.242	No	Yes
chromium*	0.264	0.285	No	Yes
manganese*	0.576	0.731	No	Yes
silver	NA	NA	NA	Yes
ammonia	NA	NA	NA	Yes

Notes:
(1) - Results in mg/L
* - Indicates analyte data are normally distributed and T-Test results are most appropriate
NA – Not appropriate because analyte data are not normally distributed
No - Statistical test suggests that means of the two data sets are not significantly different
Yes - Statistical test suggests that means of the two data sets are significantly different

Because arsenic, copper, chromium and manganese are normally distributed and parametric statistics provide reliable results, no significant difference appears to exist between means of the two data sets. It is possible that significant difference identified between the data set means identified by the Wilcoxon Rank Sum Test may be the result of unequal sample numbers obtained from the bay (n = 4) versus background (n = 16). As a result, the results of the T-Test for arsenic, copper, chromium and manganese may be more accurate.

Because silver is not normally distributed, results of the Wilcoxon Rank Sum are more reliable. However, concentrations of total silver detected in Bahia Salina Del Sur surface water samples do not exceed the maximum detected background concentration of silver (0.703 ug/L), despite the fact that the Wilcoxon Rank Sum Test suggests a statistical difference between the means of data sets.

Because ammonia does not appear to be normally distributed, the results of the Wilcoxon Rank Sum Test may be more accurate despite the differences in background and Bahia Salina Del Sur sample numbers. A closer evaluation of ammonia data indicate that ammonia exceeded the maximum detected background

concentration (0.014 mg/L) in Bahia Salina Del Sur sample BKGND–02 (0.015 mg/L). Given the precision and accuracy of the analytical method used to detect ammonia in the parts-per-billion range, these numbers are analytical (if not statistical) equivalents.

Table 12 presents a comparison of background means for constituents that exhibit agreement between the T-Test and the Wilcoxon Rank Sum Test. Both the W-Test and the Wilcoxon Rank Sum Test suggest that background means and Bahia Salina Del Sur means for these constituents are not statistically different.

Table 12
Comparison of Total Background and Bahia Salina Del Sur Mean Concentrations and the Results of Parametric and Nonparametric Statistical Tests

Analyte	Background Mean (ug/L)	Bahia Del Sur Mean (ug/L)	T-Test	WRS Test
barium*	7.539	7.664	No	No
boron	NA	NA	NA	No
cadmium	NA	NA	NA	No
lead	NA	NA	NA	No
mercury	NA	NA	NA	No
zinc	NA	NA	NA	No
sulfide*	0.0027	0.00197	No	No
fluoride*	0.6335	0.645	No	No
oil & grease	NA	ND	NA	No

Notes:
(1) - Results in mg/L
* - Indicates analyte data are normally distributed and T-Test results are most appropriate
NA – Not appropriate because analyte data are not normally distributed
No - Statistical test suggests that means of the two data sets are not significantly different
Yes - Statistical test suggests that means of the two data sets are significantly different

Table 13 presents the results of both parametric and nonparametric statistical analysis of dissolved analytical data. Both the T-Test and the Wilcoxon Rank Sum Test indicate that dissolved results for background constituent means and Bahia Salina Del Sur constituent means are not statistically different.

Table 13
Comparison of Dissolved Background and Bahia Salina Del Sur Mean Concentrations and the Results of Parametric and Nonparametric Statistical Tests

Analyte	Background Mean (ug/L)	Bahia Del Sur Mean (ug/L)	T-Test	WRS Test
arsenic*	1.242	1.179	No	No
barium*	7.384	7.478	No	No
boron	NA	NA	NA	No
cadmium	NA	NA	NA	No
chromium*	0.207	0.287	No	No
copper	NA	NA	NA	No
iron	NA	ND	--	--
lead*	0.024	0.0097	No	No
manganese*	0.631	0.579	No	No
mercury	NA	NA	NA	No
selenium	ND	ND	--	--
silver	NA	NA	NA	No
zinc*	0.955	0.578	No	No

Notes:
(1) - Results in mg/L
* - Indicates analyte data are normally distributed and T-Test results are most appropriate
NA – Not appropriate because analyte data are not normally distributed
No - Statistical test suggests that means of the two data sets are not significantly different
Yes - Statistical test suggests that means of the two data sets are significantly different