N90845.AR.000867
NWIRP BETHPAGE
5090.3a

SITE 1

PILOT-SCALE SOIL VAPOR EXTRACTION SYSTEM WORK PLAN

NWIRP BETHPAGE

Bethpage, New York

Naval Facilities Engineering Command
Mid-Atlantic

Contract No. N62472-03-D-0057
Contract Task Order 002

DECEMBER 2008

SITE 1
PILOT-SCALE SOIL VAPOR
EXTRACTION SYSTEM WORK PLAN

NAVAL FACILITIES ENGINEERING COMMAND
MID-ATLANTIC

COMPREHENSIVE LONG-TERM
ENVIRONMENTAL ACTION NAVY (CLEAN) CONTRACT

Submitted to:
Naval Facilities Engineering Command
Mid-Atlantic
9742 Maryland Avenue
Norfolk, Virginia 23511-3095

Prepared and Submitted by:
Tetra Tech NUS, Inc.
234 Mall Boulevard, Suite 260
King of Prussia, Pennsylvania 19406-1433

Contract No. N62472-03-D-0057
Contract Task Order 002

December 2008

PREPARED UNDER THE DIRECTION OF:

DAVID D. BRAYACK, P.E.
PROJECT MANAGER
TETRA TECH NUS, INC.
NORFOLK, VIRGINIA

APPROVED FOR SUBMISSION BY:

JOHN J. TREPANOWSKI, P.E.
PROGRAM MANAGER
TETRA TECH NUS, INC.
KING OF PRUSSIA, PENNSYLVANIA

TABLE OF CONTENTS

SECTION **PAGE**

ACRONYMS **A-1**

1.0 INTRODUCTION **1-1**
1.1 Scope and Objective 1-1
1.2 Document Organization 1-2

2.0 BACKGROUND **2-1**
2.1 Site Background 2-1

3.0 FIELD ACTIVITIES **3-1**
3.1 Extraction Well Installation 3-1
3.2 Soil Vapor Pressure Monitors 3-1
3.3 Soil Vapor Extraction System 3-2
3.4 Pilot Test Operation 3-2

4.0 DATA EVALUATION AND REPORTING REQUIREMENTS **4-1**

REFERENCES **R-1**

ATTACHMENTS

1 January 2008 Soil Gas Results
2 Soil Vapor Containment System Blower Specifications
3 Air Filtration – Carbon Unit specifications
4 Field Forms

FIGURES

NUMBER

1 General Location Map
1 Site Location Map
3 Soil Gas Sampling Results and Cross Section Location Map
4 Proposed Soil Vapor Extraction Wells and Soil Vapor Pressure Monitors
5 Geological Cross-Section C-C’

ACRONYMNS

1,2-DCA	1,2-dichloroethane
1,1-DCE	1,1-dichloroethene
1,2-DCE	1,2-dichloroethene
AOC	Area of Concern
AS/SVE	Air Sparging/Soil Vapor Extraction
bgs	below ground surface
cfm	cubic foot per minute
CLEAN	Comprehensive Long-Term Environmental Action Navy
CTO	Contract Task Order
IAS	Initial Assessment Study
IDW	Investigation Derived Waste
NDNFEC	Northern Division Naval Facilities Engineering Command
NWIRP	Naval Weapons Industrial Reserve Plant
NYSDEC	New York State Department of Environmental Conservation
NYSDOH	New York State Department of Health
PCB	Polychlorinated Biphenyls
PCE	Tetrachloorethene
ROD	Record of Decision
PRGs	Preliminary Remediation Goals
PVC	Polyvinyl Chloride
SVE	Soil Vapor Extraction
TAL	Target Analyte List
TCA	1,1,1- trichloroethane
TCE	Trichloroethene
TCL	Target Compound List
µg/L	micrograms per liter
$\mu g/m^3$	micrograms per cubic meter
USEPA	United State Environmental Protection Agency
VOC	Volatile Organic Compounds

1.0 INTRODUCTION

This Pilot-Scale Soil Vapor Extraction System Work Plan has been prepared by Tetra Tech NUS, Inc. (Tetra Tech) for the Mid-Atlantic Division of Naval Facilities Engineering Command under the Comprehensive Long-Term Environmental Action Navy (CLEAN) III contract number N62472-03-D-0057, Contract Task Order (CTO) 002. The work is being conducted at Site 1 – Former Drum Marshalling Area, located at Naval Weapons Industrial Reserve Plant (NWIRP) Bethpage, Long Island, New York (Figures 1 and 2).

Site 1 has been identified as a source of solvent-contaminated soil and groundwater in the area. As part of a remedial action at the site, an air sparging/soil vapor extraction (AS/SVE) system was constructed and operated from 1998 to 2002. This system achieved the goal of eliminating an ongoing source of groundwater contamination. At that time, soil vapor migration was not identified as a pathway for contaminant migration. This Work Plan addresses the construction and operation of a pilot-scale soil vapor extraction system to develop physical characteristics of the eastern portion of Site 1 and a residential neighborhood to the east of Site 1 and will be used with data from an off site soil gas investigation to design a full-scale soil vapor extraction system for soil vapors contaminated by volatile organic compounds (VOCs).

1.1 Scope and Objective

The purpose of the pilot-scale testing at Site 1 is to determine critical design parameters to support the full-scale design of an onsite soil vapor extraction system. The objective of the full-scale system will be to prevent migration of contaminated soil vapor from Site 1 to off site areas; and to the extent practical, collect contaminated soil vapors that have already migrated off site. Specific objectives of the pilot-scale test are as follows.

- Measure capture zones for a pilot-scale soil vapor extraction (SVE) system operating at area-specific extraction rates of 20 to 100 cubic feet per minute (cfm) per well.
- Determine potential directional and vertical variability in capture zones.

Primary factors that affect the migration of contaminated soil vapors in this area include the following:

- wind direction and local structures;
- low permeability surfaces (e.g., asphalt roads and frozen ground);
- entrapment of VOCs in low permeability soils; and
- precipitation infiltration.

1.2 Document Organization

Section 1.0 of this document presents this introduction, project scope, and objective. Section 2.0 presents Site history. Section 3.0 presents field operations. Section 4.0 presents data evaluation and reporting requirements.

2.0 BACKGROUND

The NWIRP Bethpage was established in 1933. Since its inception, the plant's primary mission has been the research prototyping, testing, design engineering, fabrication, and primary assembly of military aircraft. The facilities at NWIRP Bethpage included four plants used for assembly and prototype testing; a group of quality control laboratories, two warehouses complexes (north and south), a salvage storage area, water recharge basins, the Industrial Wastewater Treatment Plant, and several smaller support buildings. In 1998, operations ended at the facilities. By 2007, the majority of the facility was transferred to Nassau County for economic redevelopment. Approximately 9 acres remain and consist of Site 1 – Former Drum Marshalling Area, Site 4 [Area of Concern (AOC) 22] – Former Underground Storage Tanks, and a strip of land connecting the two sites.

Site 1 is located in the middle third of the NWIRP Bethpage facility and is east of Plant No. 3, see Figure 2. The Site occupies approximately four acres, and contains a concrete storage pad and an abandoned cesspool leach field. Historically, this site was also used as a storage area for various types of equipment and heavy materials, including transformers. Site 1 is enclosed by a six-foot high, chain-link fence. The site is relatively flat, with the eastern portion covered with sandy soils, gravel, grass, and one concrete pad. The western portion of the site is predominantly covered with concrete. A vegetated wind row (pine) and wood fence are present along the eastern edge of the site to reduce community visibility.

2.1 BACKGROUND

In 1985, an Initial Assessment Study (IAS) conducted at the NWIRP Bethpage, NY, identified materials stored at Site 1 the Former Drum Marshaling Area. This storage first took place on a gravel surface over the cesspool field, east of Plant No. 3. Hazardous waste management practices for Northrop Grumman facilities included the staging of drummed wastes include waste halogenated and non-halogenated solvents (Rogers, Golden & Halpern, 1986). Cadmium and cyanide were also stored within Site 1 from the early 1950s through 1974. Reportedly, 200 to 300 drums were present at any one time. In 1978, the collection and marshaling point was moved a few yards south of the original site, to a concrete pad. In 1982, drummed waste storage was relocated to another Drum Marshaling facility located in the Salvage Storage Area, which is not at Site 1. Reportedly, there was no direct evidence of hazardous waste spills at Site 1. An abandoned septic drainage system almost completely underlies the entire area of Site 1.

A remedy for the site and remediation goals were established in the Record of Decision (ROD) prepared in May 1995 (NDNFEC/NYSDEC, 1995). The remediation goals were established to control continuing releases of VOCs to groundwater. An AS/SVE system was constructed in 1998 to address VOCs in site soils. The primary volatile compounds of concern, based on distribution and maximum detected concentrations, included trichloroethene (TCE), tetrachloroethene (PCE), 1,1,1-trichloroethane (TCA), 1,2-dichloroethane (1,2-DCA), 1,2-dichloroethene (1,2-DCE), and 1,1-dichloroethene (1,1-DCE).

The AS/SVE system operated from 1998 to 2002 with seasonal shutdowns during winter months. Approximately 4,500 pounds of VOCs were removed from the soil and groundwater during this period. To evaluate the effectiveness of the system, post-treatment groundwater sampling was conducted in 2002. Maximum detected results included TCE at 29 microgram per liter (µg/L), PCE at 21 µg/L, and TCA at 48 µg/L (Foster Wheeler Environmental, Corp., 2003).

Also in 2002 a post-treatment soil boring program was conducted. A total of 41 soil borings were advanced to the top of the water table and samples were collected at various depths. The soil samples were analyzed for target compound list (TCL) VOCs, polychlorinated biphenyls (PCBs), and target analyte list (TAL) metals. Sample results found that VOCs were not detected in the majority of soil samples. However, VOCs exceeding the PRGs were observed in several samples at depths ranging from 10 to 64 feet. Of particular interest for this soil vapor investigation is one sample located near the southeastern corner of Site 1, in which TCE was detected at 120,000 micrograms per kilogram (µg/kg) (Foster Wheeler Environmental, Corp., 2003).

In 2006, the New York State Department of Health (NYSDOH) issued final regulatory guidance for evaluating soil vapor intrusion and identified soil vapor migration and intrusion into buildings as a potential concern. Based on this guidance, in January 2008, the Navy conducted a soil gas investigation along the eastern edge of Site 1 that is adjacent to a residential neighborhood (Tetra Tech, 2008a).

The January 2008 investigation detected site-related VOCs in the soil gas samples, with the majority of the results being less than potential screening values. However, several soil gas samples in the southeastern corner of Site 1 (BPS1-SG1001) contained higher concentrations of VOCs. TCE was detected in one sample at a concentration of 180,000 micrograms per cubic meter (µg/m^3) (Attachment 1). For comparison, NYSDOH indoor air and sub slab values for TCE are 5 ug/m^3 and 250 ug/m^3, respectively. Other VOCs were detected in this general area and included PCE at 5,300 ug/m^3 and TCA at 90,000 ug/m^3. NYSDOH indoor air and sub slab

screening values for PCE are 100 ug/m^3 and 1,000 ug/m^3, respectively. NYSDOH has not established screening values for TCA; however, the United States Environmental Protection Agency (USEPA) has developed a risk-based screening value for TCA in ambient air at 5,200 ug/m^3. Based on the results of this investigation, it was determined that contaminated soil vapor was present at the eastern boundary of Site 1; and based on the detected concentrations relative to potential screening values, the VOCs have the potential to migrate beyond the Navy property line.

Based on the findings of the January 2008 testing, an off-site investigation was conducted in October 2008 (Tetra Tech, 2008b). Preliminary results of the investigation for TCE and PCE are presented in Figure 3. TCE and PCE were detected at maximum concentrations of 89,000 ug/m^3 (BPS1-SG2002) and 5,000 ug/m^3 (BPS1-SG2002), respectively. The maximum concentrations detected off site were from samples collected in close proximity to the maximum concentrations detected at Site 1 (BPS1-SG1001 and SVPM11S) (Figure 4). The investigation also found that VOC concentrations decreased significantly with distance beyond edge of Site 1. VOC results from shallow samples (8 feet bgs) and intermediate-depth samples (20 feet bgs) collected at a distance of approximately 280 from Site 1 were less than NYSDOH sub slab screening values. However, two of six deep samples (48 to 49 feet bgs) collected approximately 280 feet from Site 1 contained TCE at a concentration greater than NYSDOH sub slab screening values, with a maximum concentration of 710 ug/m^3. A supplemental soil gas investigation planned for January 2009 will be used to further delineate the extent of the deep soil gas results exceeding NYSDOH sub slab screening values.

In summary, evaluation of the data indicates that the majority of the contaminated soil gas is located in the southeastern corner of Site 1, near BPS1-SG1001 and SVPM12, and off site at location BPS1-SG2002. Additional contaminated soil gas to the north and along the eastern edge of Site 1 must also be addressed during full scale design considerations. Sample location BPS1-SG2002 is approximately 40 feet from the Site 1. As a minimum, this location must be addressed as part of a remediation system. In addition, TCE was detected at concentrations greater than the NYSDOH sub slab screening value at BPS1-SG2003 - 150 feet southeast of Site 1 and BPS1-SG2007 – 280 feet east of Site 1.

To help design the current pilot-scale soil vapor extraction test, AS/SVE pilot-scale test results from a study conducted at the site in 1997 were used (CF Braun, 1997). This testing demonstrated that a conservative design capture zone of 75 feet was achieved at an extraction rate of 20 to 30 cfm. However, the 1997 testing did not evaluate potential capture of soil gas from offsite areas and did not evaluate potential capture zones greater than 75 feet. In addition, the

pilot-scale and full-scale AS/SVE systems did not evaluate winter operations in which frozen ground surfaces can extend soil gas capture zones. Based on the offsite soil gas results, soil gas monitoring points will established at distances of approximately 50 to 280 feet from planned onsite soil vapor extraction wells. Existing monitoring wells, soil vapor extraction wells, and pressure monitors will be used as feasible. In addition, higher soil vapor extraction rates will be evaluated.

3.0 FIELD ACTIVITIES

Pilot-scale testing of a soil vapor extraction system will include two operating soil vapor extraction wells (SVE-101I and SVE101D) located in the southeastern corner of Site 1. Soil vapor pressure monitors will be located onsite and offsite (Figures 4 and 5). Tests will be conducted at five different extraction rates and soil vapor pressure readings will be recorded throughout the duration of the test and be used to evaluate the characteristics of the subsurface soils at the site. The duration of this pilot-scale test will be four consecutive days, with the system running continuous throughout the entire duration. The following sections provide a description of field activities to be performed during the pilot-scale test of the soil extraction system at Site 1.

3.1 Extraction Well Installation

Two soil vapor wells, one screened approximately 40 to 60 feet below ground surface (bgs) (SVE-101D) and one screened approximately 25 to 35 feet bgs (SVE-101I) will be installed and used during this pilot-scale study (Attachment 4 – Table 1). The extraction wells will be installed in the southeastern corner of Site 1 (Figures 4 and 5) using hollow-stem drilling methods. The wells will be constructed with 2-inch PVC riser and 20 slot (0.02 inch) well screens. Split spoon samples will be collected in the targeted screened intervals (25 to 60 feet) of the deep boring to confirm the absence of significant clay (Figure 5). The deep well screen interval may be raised to ensure a minimum of 6 feet of screen is above a clay unit suspected to be present in the area.

The wells will be installed through the auger and the gravel pack (DSI No. 2 sand) will be installed as the augers are being raised. The gravel pack will be installed to approximately 2 foot above the top of the screened interval. A two-foot thick bentonite plug will be used above the gravel pack to provide a seal. The remainder of the annular space up to the ground surface will be filled using bentonite/cement grout (1 part bentonite to 19 parts cement). The wells will be finished with an approximate 1-foot stickup. Protective casings will <u>not</u> be installed and the wells will not be developed.

All soil cuttings generated during the installation of the extraction wells will be containerized in 55-gallon drums and managed as IDW

3.2 Soil Vapor Pressure Monitors

Seven soil vapor pressure monitors will be installed in the offsite residential neighborhood. These monitors will be 1-inch PVC installed to depths of 10 feet (shallow – S), 25 feet (intermediate – I),

and 42 feet (deep – D). Each screen will be 10 slot (0.01 inch) and two feet long (Attachment 4 – Table 1). The wells will be installed using direct push technology to the targeted depth. Each location corresponds to a recently drilled soil boring and additional soil sampling will not be required as part of this effort.

The piezometers will be temporary and will be removed within 4 weeks after installation. Installation will consist of placement of the 1-inch piezometer within a 2.25-inch boring. No. 1 sand will be installed to an approximately height of approximately 5 feet above the screen. Next 4 to 6 feet of sand and bentonite will be installed to a thickness of approximately 5 feet and hydrated. The remainder of the boring will be filled with No. 1 sand to the ground surface. Potable water will be used to help install the sand to the ground surface.

After the pilot-scale test is completed, the piezometers will be removed from the boring and the boring filled with No 1 sand. In the event that a piezometer is damaged during removal, the top of the piezometer will be removed to 3 feet below ground surface and the hole abandoned to the ground surface with sand and soil. Protective casings will not be installed. Traffic cones will be used to protect the piezometers after installation, during the testing, and prior to abandonment.

3.3 Soil Vapor Extraction System

The soil vapor extraction system to be constructed during this pilot-scale test will consist of two soil vapor extraction wells (SVE-101D and -101I), connecting piping, control valves, sample ports, two blowers, vapor phase carbon, and a discharge stack. Each blower is capable of drawing 60 cfm, with a maximum combined flow rate of 100 cfm (Attachment 2). The vapor extraction system will be required to produce a maximum vacuum of approximately 40 inches of water column to achieve the targeted flow rates. Soil vapors collected from the extraction wells will be treated using a granular activated carbon filtration unit (Attachment 3). Once the soil vapor has been treated by the carbon unit it will be vented into the atmosphere. During the pilot-scale study, soil vapor condensation will form within the PVC piping network. Soil vapor condensation collection point(s) will be installed along the PVC pipe network at low points. Condensation will be periodically drained and collected during the test. Fluids collected from the condensation will be containerized in a 55 gallon drum and managed as IDW.

3.4 Pilot Test Operation

The pilot-scale testing of the soil vapor extraction system will be conducted over the course of four consecutive days and consist of five 8- to 24-hour tests. The tests will be run consecutively

starting at a low flow rate and increase in flow rate in steps. Tests 1, 2, and 3 will draw soil vapor from the deep well only, at rates of 20, 40, and 60 cfm, respectively. Tests 4 and 5 will consist of the operation of the deep well at approximately 60 cfm plus the shallow well at rates of approximately 20 and 40 cfm, respectively. Valves located at the soil vapor extraction wells and the blower unit(s), and bleed air will be used to adjust the soil vapor flow rate during the pilot test. During the tests, vacuum and flow rate reading will be recorded at the head of each soil vapor well, pre-blower unit, and post-blower unit (prior to carbon filtration unit). Field forms will be used to record data throughout the test (Attachment 4 – Table 2).

During the course of the pilot-scale testing, approximately three pressure readings will be obtained from approximately 14 pressure monitors. Figures 4 and 5 present the location of the well and piezometers in relation to the soil vapor extraction wells. For select wells in which vacuum readings are not measurable but are suspected, smoke testing may be conducted to determine the presence of a vacuum. Field forms will be used to record data throughout the test (Attachment 4 – Table 3).

4.0 DATA EVALUATION AND REPORTING REQUIREMENTS

The data collected will be summarized in a Data Summary Report that will include a description of the field activities conducted, well and piezometer construction sheets, and pressure readings from the monitoring points, and vacuum and flow measurements on the extraction system. Design criteria developed from this testing will be presented in the design package for the full-scale system.

The data will be evaluated by plotting pressure readings as a function of distance from the operating SVE wells on a semi-logarithmic graph for each of the flow rate (e.g., 20 cfm) and each depth (e.g., 40 feet bgs). A capture zone will be determined using 0.01 inch water column as a basis to defining the extent of capture. A linear regression will be performed to address fluctuations in the data.

Design capture zones will be developed based on evaluation of the deep and intermediate-depth zones of monitoring points. Effects at the shallow depth will be evaluated based on pressure ratios measured at BPS1-PZ2002S, I, and D. Measureable vacuums in shallower points are limited by sensitivity of field instruments and fluctuations in atmospheric pressure. In the absence of significant confining units between extraction wells and shallower soils (none were observed during previous work in the neighborhood), capture of soil gas at shallower depths can inferred from the development of vacuum at depth.

The affects of flow rate on design capture zone will be determined by plotting capture zone as a function of flow rate on semi-logarithmic plot and conducting a linear regression of the data to develop a design curve. The design will be target capture of soil vapor approximately 280 feet for the depth zone (10th Street) and 150 feet for the intermediate-depth zone as measured from the Site 1 boundary.

REFERENCES

CF Braun, 1997. Design Analysis Report for Air Sparging/Soil Vapor Extraction System at Site 1 – Former Drum Marshalling Area, NWIRP Bethpage, New York. Northern Division Naval Facilities Engineering Command, Contract Number N62472-90-D-1298, Contract Task Order 0213. September.

Foster Wheeler Environmental Corp., 2003. Final Close-Out Report, Construction of a Soil Vapor Extraction/Air Sparging System at the Naval Weapons Industrial Reserve Plant Bethpage, NY. December.

New York State Department of Health (NYSDOH), 2006. FINAL Guidance for Evaluating Soil Vapor Intrusion in the State of New York. October.

Northern Division Naval Facilities Engineering Command and New York State Department of Environmental Conservation (NDNFEC/NYSDEC), 1995. Record of Decision, Naval Weapons Industrial Reserve Plant, Bethpage, New York Sites 1, 2, 3 NYS Registry: 1-30-003B. May.

Rogers, Golden & Halpern, 1986. Initial Assessment Study of NWIRP Bethpage, NY and NWIRP Calverton, NY. December.

Tetra Tech NUS, Inc., 2008a. Site 1 Soil Vapor Investigation. Naval Weapons Industrial Reserve Plant Bethpage, Bethpage New York. Naval Facilities Engineering Command Mid-Atlantic, Contract No. N62472-03-D-0057, CTO 002. April.

Tetra Tech NUS, Inc., 2008b. Site 1 Phase II Soil Vapor Testing Work Plan. Naval Weapons Industrial Reserve Plant Bethpage, Bethpage New York. Naval Facilities Engineering Command Mid-Atlantic, Contract No. N62472-03-D-0057, CTO 147. September.

FIGURES

ACAD:9845CM04.DWG 02/15/06 MF PIT

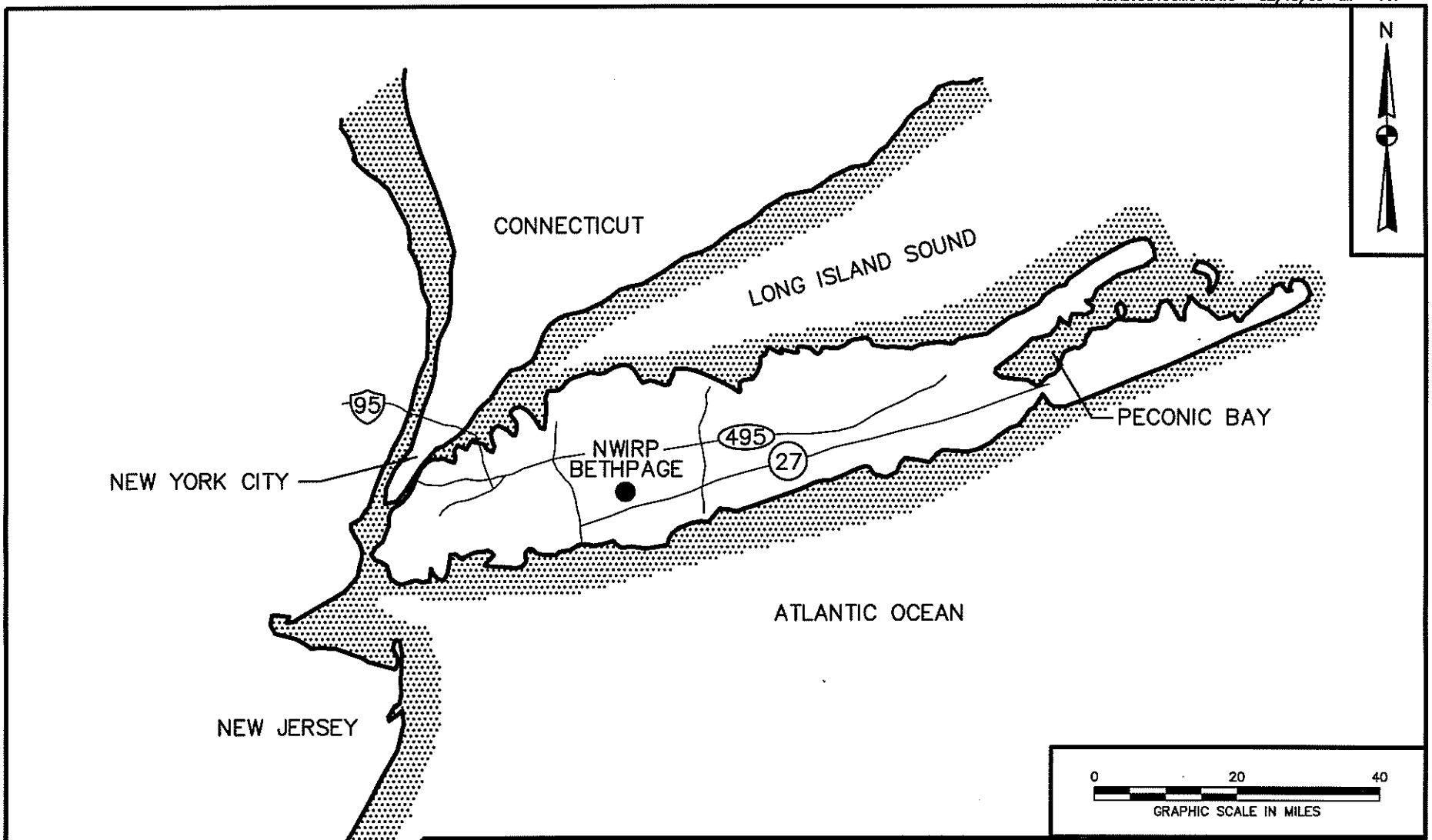

DRAWN BY MF	DATE 12/9/05	Tetra Tech NUS, Inc.	GENERAL LOCATION MAP ESD NWIRP BETHPAGE BETHPAGE, NEW YORK
CHECKED BY	DATE		
REVISED BY	DATE		
SCALE AS NOTED			

CONTRACT NO. 9845	
OWNER NO. 0002	
APPROVED BY	DATE
DRAWING NO. FIGURE 1	REV. 0

FORM CADD NO. TTNUS-AH.DWG - REV 1 -9/10/98

ACAD: 0804CM02.dwg 06/13/07 MF PIT

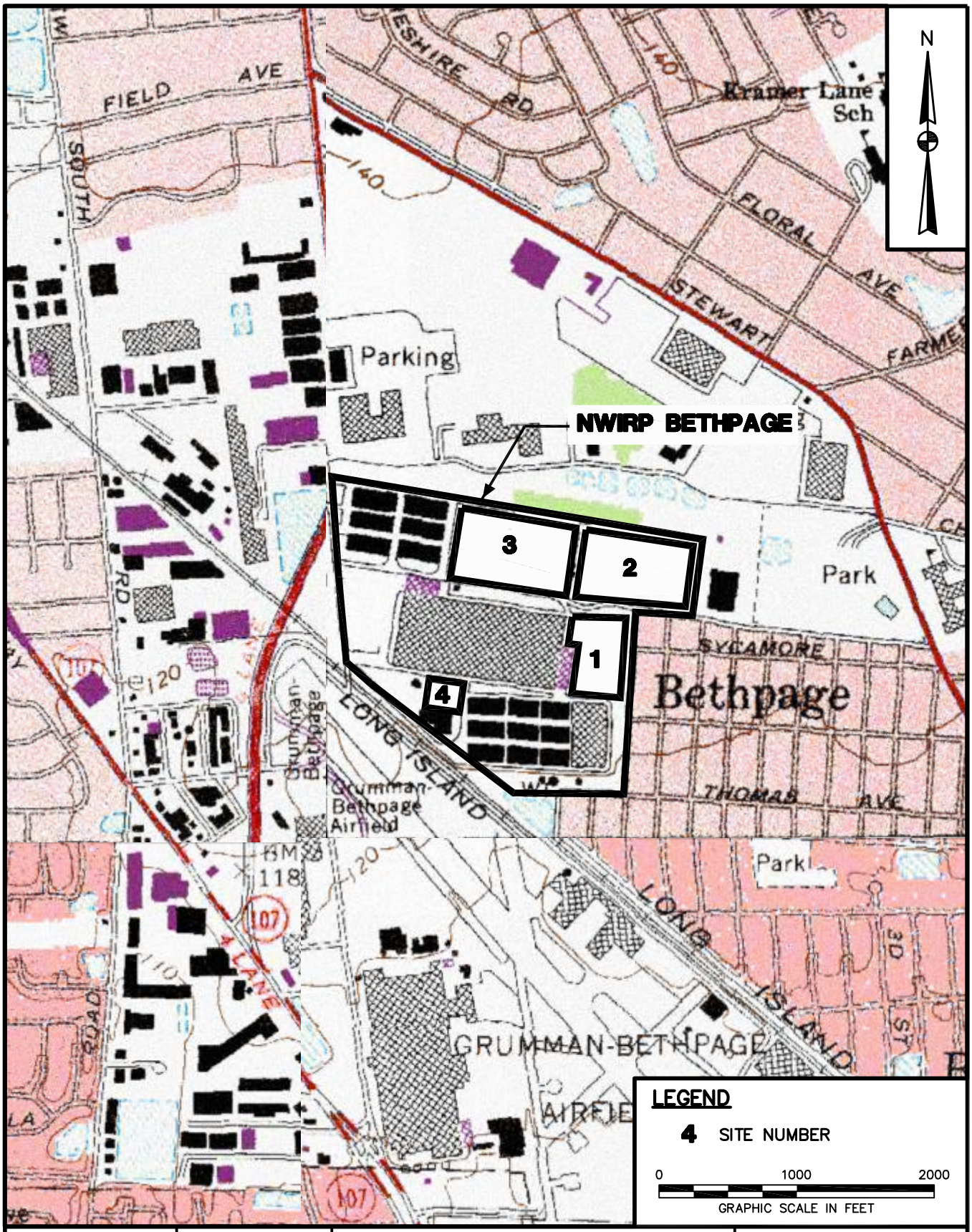

DRAWN BY MF	DATE 6/13/07	Tetra Tech NUS, Inc.	CONTRACT NO. 0804
CHECKED BY	DATE	SITE LOCATION MAP SITE 1 NWIRP BETHPAGE BETHPAGE, NEW YORK	OWNER NO.
REVISED BY	DATE		APPROVED BY / DATE
SCALE AS NOTED			DRAWING NO. FIGURE 2 / REV. 0

FORM CADD NO. TTNUS-AV.DWG - REV 1 -9/10/98

112GN9845/2910/112GN9845GM02.DWG 12/31/08 MKB

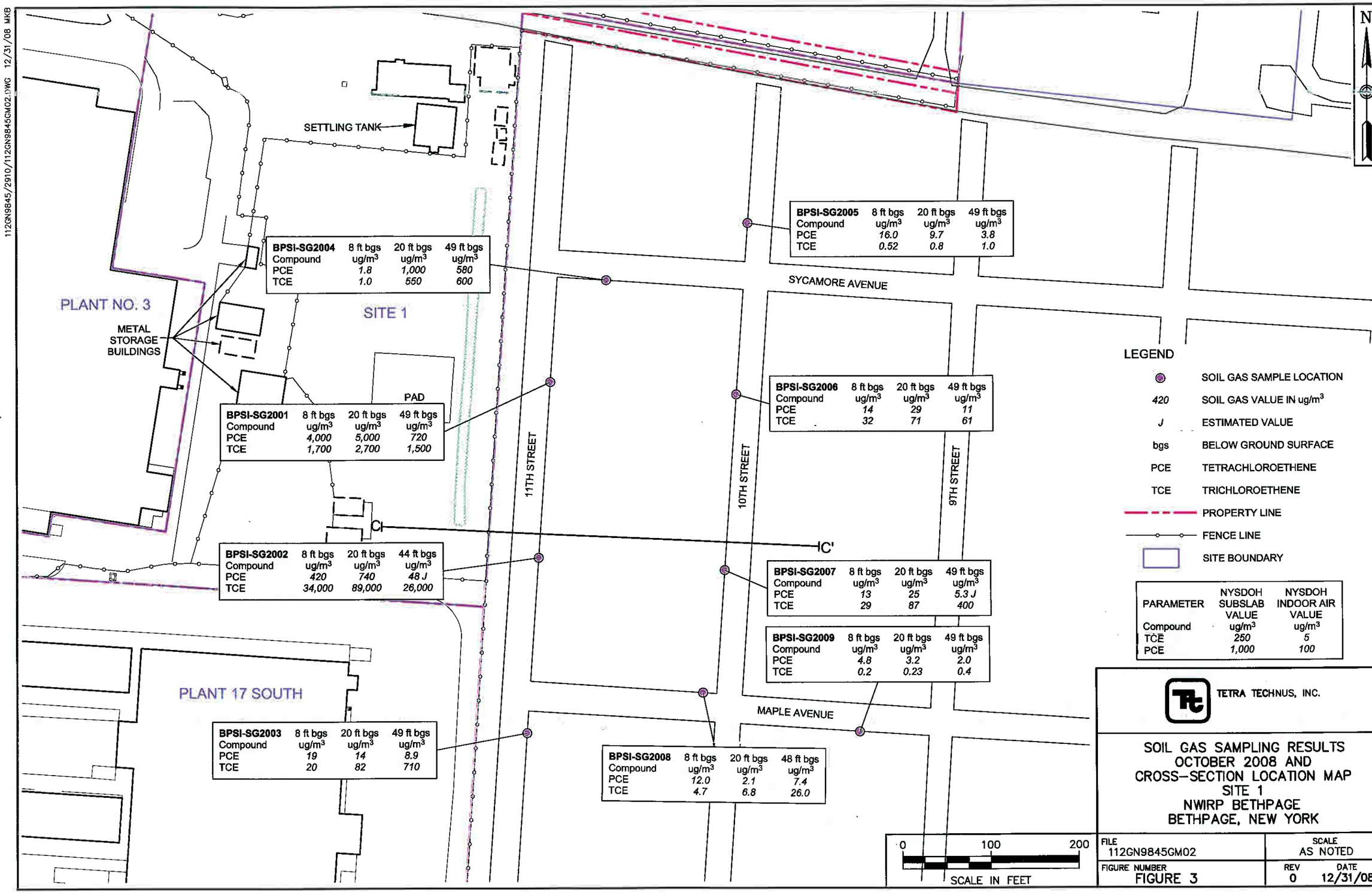

LEGEND

●	SOIL GAS SAMPLE LOCATION
420	SOIL GAS VALUE IN ug/m^3
J	ESTIMATED VALUE
bgs	BELOW GROUND SURFACE
PCE	TETRACHLOROETHENE
TCE	TRICHLOROETHENE
— — —	PROPERTY LINE
—o—o—	FENCE LINE
▭	SITE BOUNDARY

PARAMETER	NYSDOH SUBSLAB VALUE	NYSDOH INDOOR AIR VALUE
Compound	ug/m^3	ug/m^3
TCE	250	5
PCE	1,000	100

TETRA TECHNUS, INC.

SOIL GAS SAMPLING RESULTS
OCTOBER 2008 AND
CROSS-SECTION LOCATION MAP
SITE 1
NWIRP BETHPAGE
BETHPAGE, NEW YORK

FILE	SCALE
112GN9845GM02	AS NOTED
FIGURE NUMBER	REV / DATE
FIGURE 3	0 / 12/31/08

112GN9845/2910/112GN9845GM01.DWG 12/31/08 MKB

TETRA TECHNUS, INC.

PROPOSED
SOIL VAPOR EXTRACTION WELLS AND
SOIL VAPOR PRESSURE MONITORS
SITE 1
NWIRP BETHPAGE
BETHPAGE, NEW YORK

FILE	SCALE
112GN9845GM01	AS NOTED

FIGURE NUMBER	REV	DATE
FIGURE 4	0	12/31/08

112GN9845\2910\112GN9845GX01.DWG 12/31/08 MKB

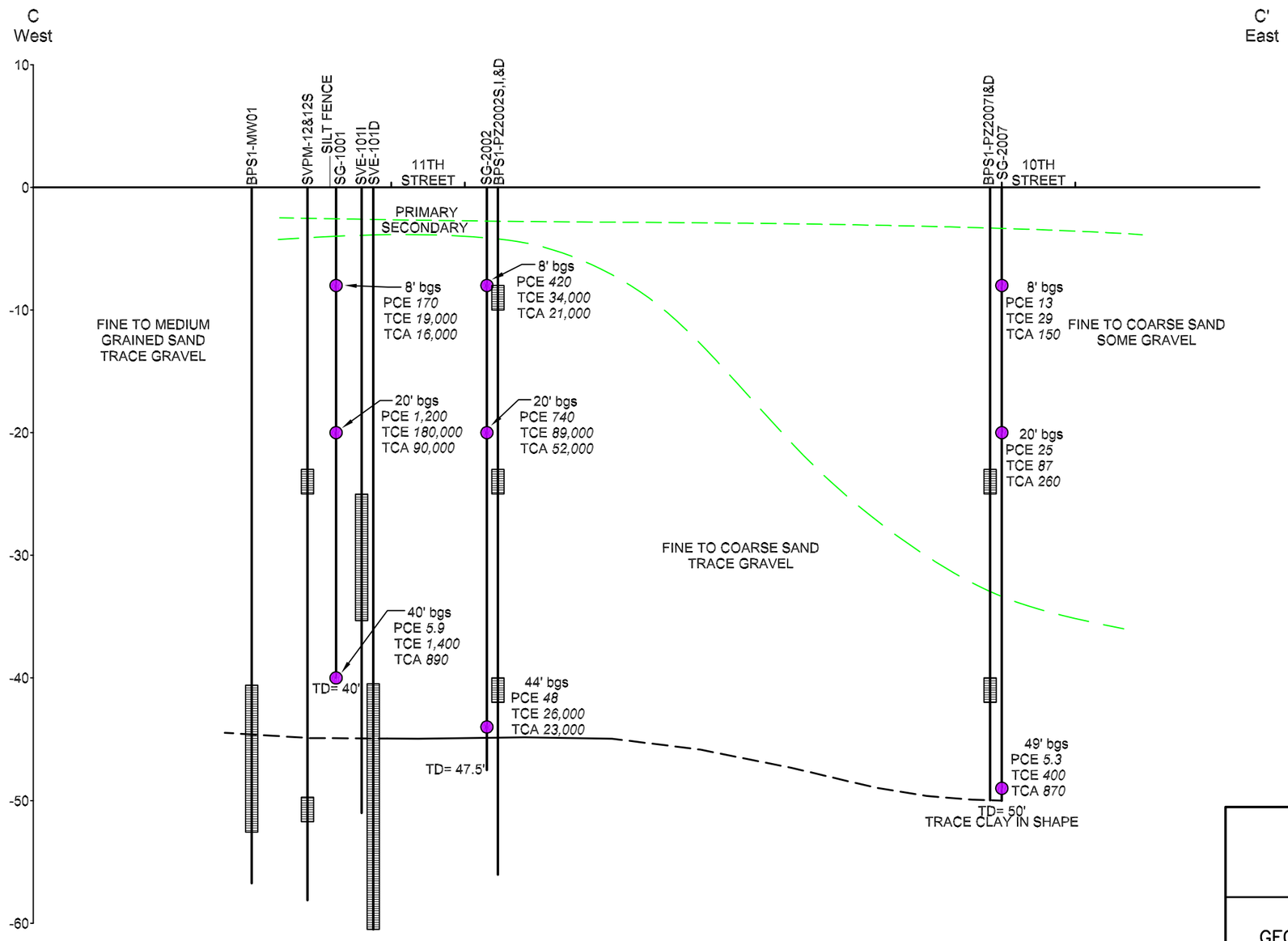

1. LITHOLOGY INTERPOLATED FROM GEOPHYSICAL LOGS, DRILL CUTTINGS, AND/OR MACROCOCE SAMPLERS.
2. TD = TOTAL DEPTH.
3. PCE = TETRACHLOROETHENE.
4. TCE = TRICHLOROETHENE.
5. TCA = 1,1,1-TRICHLOROETHANE
6. SOIL GAS VALUE IN ug/m^3.
7. bgs = BELOW GROUND SURFACE.
8. PIEZOMETERS PROJECTED ONTO CROSS-SECTION C – C', HORIZONTAL DISTANCES ARE APPROXIMATE

TETRA TECH NUS, INC.

GEOLOGIC CROSS-SECTION C – C'
SITE 1
NWIRP BETHPAGE
BETHPAGE, NEW YORK

FILE	SCALE
112GN9845GX01.DWG	AS NOTED
FIGURE NUMBER	REV / DATE
FIGURE 5	0 / 12/31/08

ATTACHMENT 1

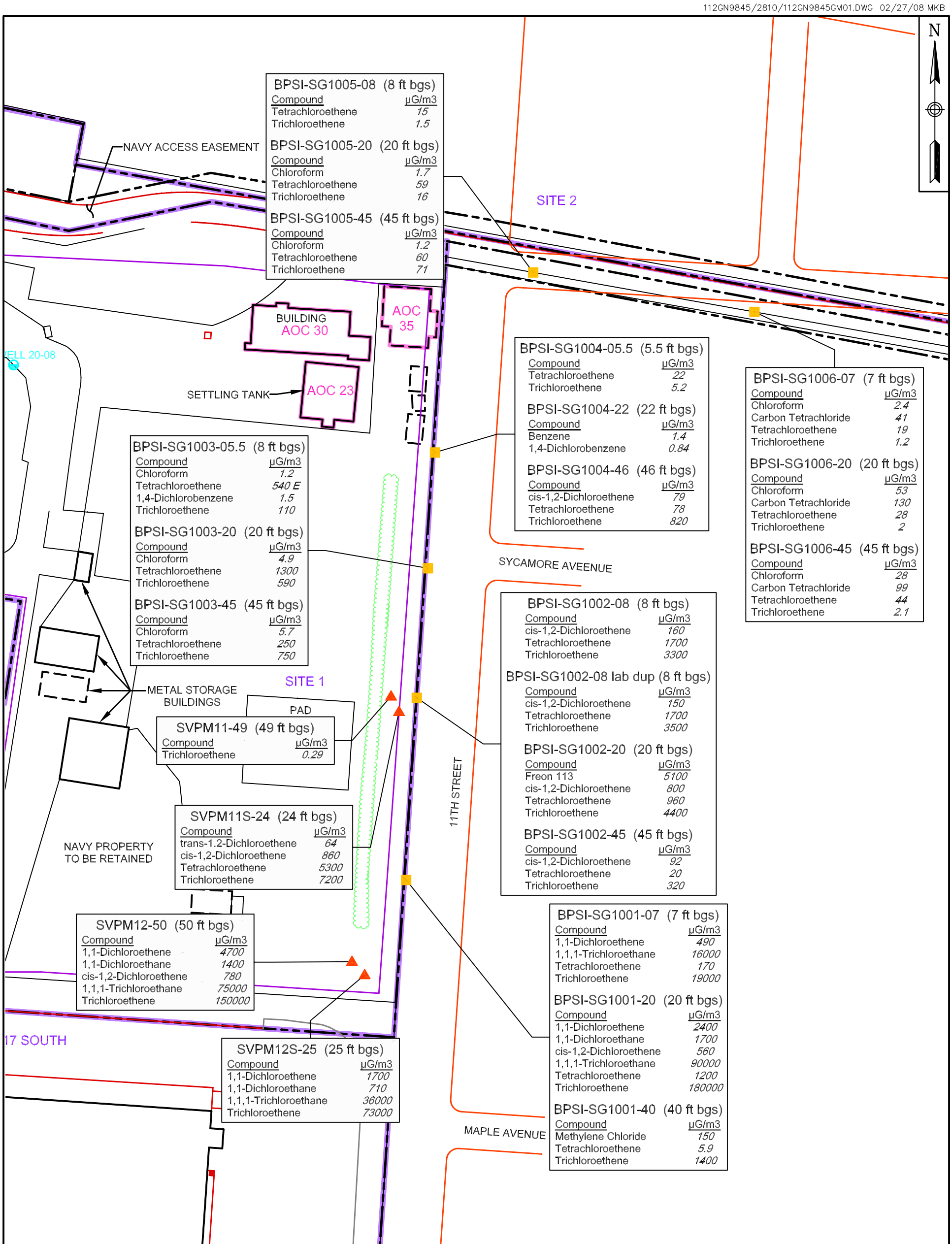

LEGEND

- DRY WELL
- SOIL GAS SAMPLE LOCATION
- SOIL VAPR PRESSURE MONITOR
- PROPERTY LINE
- FENCE LINE
- SITE BOUNDARY
- AOC BOUNDARY

NOTE:
FIGURE PRESENTS VOLATILE ORGANIC COMPOUNDS THAT EXCEED EPA REGION 3 RBCs FOR INDOOR AIR. FOR COMPARISON, NEW YORK STATE DEPARTMENT OF HEALTH INDOOR AIR CRITERIA FOR TCE AND PCE ARE 5 µg/m³ AND 100 µg/m³ RESPECTIVELY.

0 80 160
SCALE IN FEET

TETRA TECH NUS, INC.

SOIL GAS RESULTS
SITE 1
NWIRP BETHPAGE
BETHPAGE, NEW YORK

FILE	SCALE
112GN9845GM01	AS NOTED
FIGURE NUMBER	REV / DATE
FIGURE 4	0 / 02/27/08

ATTACHMENT 2

PORTABLE VAPOR EXTRACTION PACKAGE

Ideal for vapor extraction pilot studies and temporary fume remediation.

MODEL PVE - RT1

Features

- Rotron EN404 vapor extractor
- 1.0 HP Explosion-proof motor
- Explosion-proof ON/OFF switch
- 100' of 12-3 Electrical cord, 115V
- Heavy duty tubular frame
- Inlet filter
- Inlet sampling port
- Outlet sampling port
- 1" Bleed air inlet valve
- Vacuum gauge
- Pressure gauge
- 5' of 2" PVC vacuum hose with camlock connections

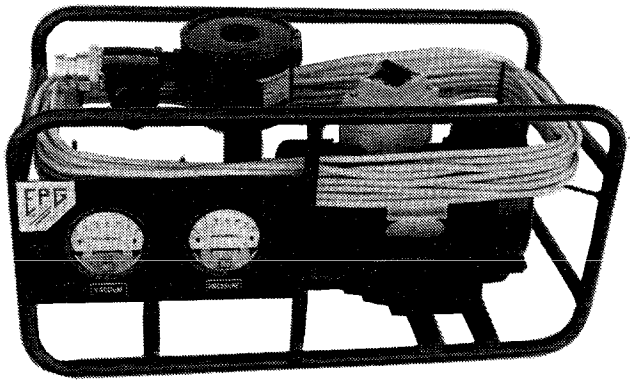

Blower Performance (standard conditions)

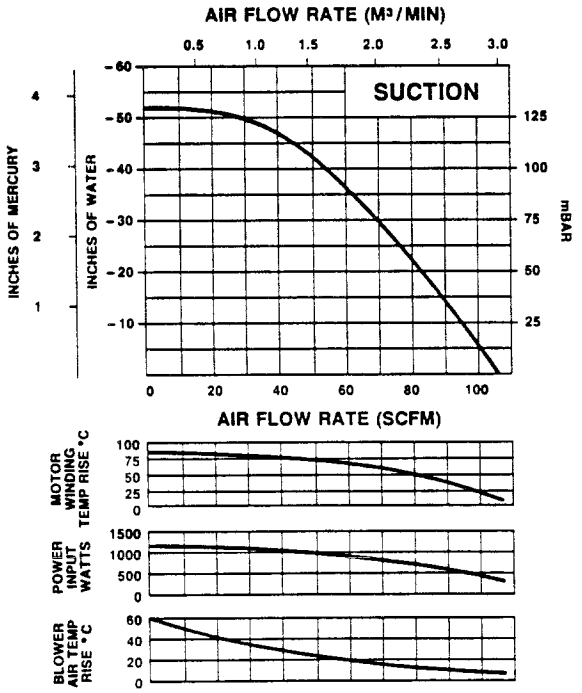

Specifications

- Operates from 115 VAC, 15 Amp circuit (must have curcuit breaker or slow blow 15 amp fuses)
- Overall dimensions: 18"H x 16"W x 35"L
- Shipping weight: 150 lbs.
- Options: Well head adaptors, air flow meters, and wheels kit

MODEL	EN404AR58ML	
Part No.	038173	
Motor Enclosure Type	Explosion-proof	
Horsepower	1.0	
Phase — Frequency	Single — 60 Hz	
Voltage	115	230
Motor Nameplate Amps	12	6
Maximum Blower Amps[1]	14.5	7.2
Inrush Amps	70	35
Starter Size	0	00
Service Factor	1.0	
Thermal Protection	Automatic	
Bearing Type	Sealed, Ball	

$250.00 WEEKLY, $600.00 MO.
+ FREIGHT CHARGES TO/FROM EPG

- Available for Sale or Rent -

EPG Companies Inc.
19900 County Road 81
Maple Grove, MN 55311
Phone:. 612-424-2613 1-800-443-7426
FAX 612-493-4812

Bulletin 0440

Sold by:

©EPG Companies Inc. 1996

BLOWER	MOTOR HP	TYPE	VOLT	PH	Hz	WEIGHT lbs
EN404AR58ML	1	XP	115	1	60	100

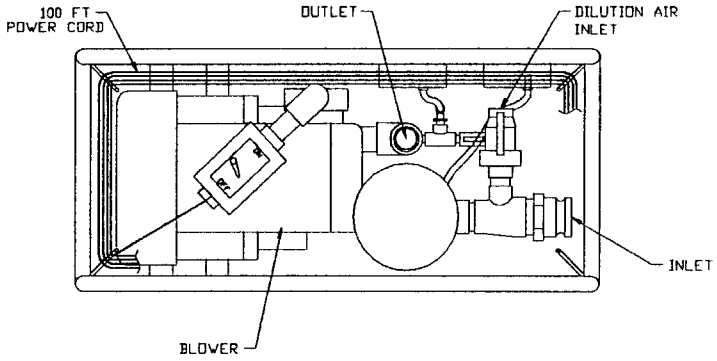

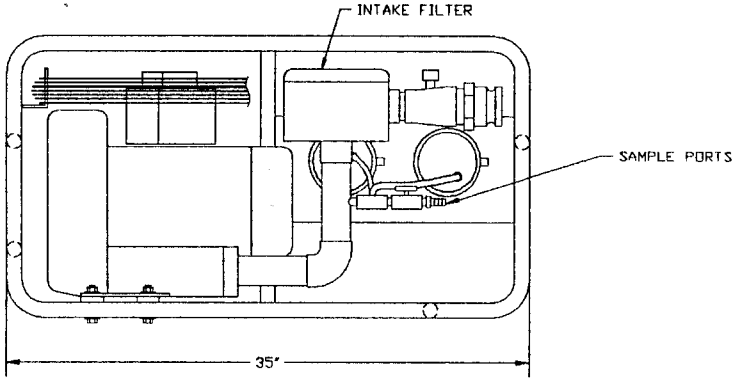

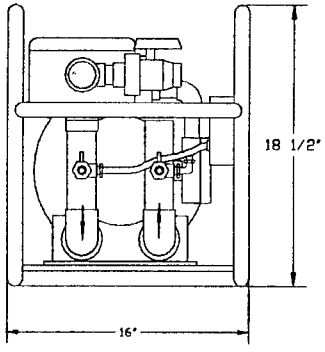

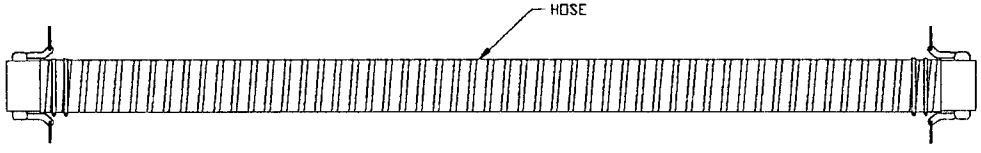

※ NOTICE ※

THIS DRAWING IS A PROPERTY OF EPG COMPANIES FOR REFERENCE ONLY.

TOLERANCES	REVISIONS				
	NO.	DATE	BY	EPG COMPANIES	
DECIMAL ±	1	11-01-93	D.S.	PORTABLE VAPOR EXTRACTION ASSEMBLY	
	2	7-18-94	JAH		
FRACTIONAL ±	3			DRAWN BY D.S.	SCALE 1/8"=1'
	4			CHECK G.U.	DATE 01-06-93
ANGULAR ±	5				1507-1

ATTACHMENT 3

33 Paterson Street
Paterson, NJ 07501
Tel: 973 523-2223
Fax: 973 523-1494
sales@generalcarbon.com

The General

Air Pollution Control Barrels

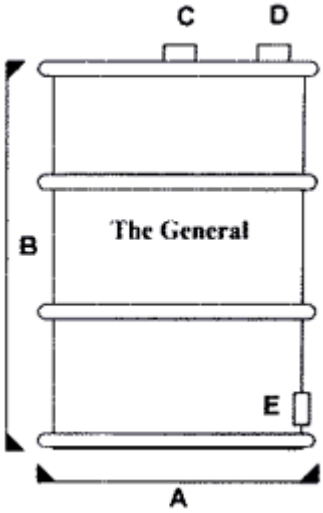

The General Air Pollution Control Barrels are ready to use, low cost, self contained air purification units that can treat air flows of up to 250 CFM. **The General** is available in three different sizes to better serve your treatment needs.

Specifications	**55 Gallon**	**85 Gallon**	**110 Gallon**
A-Diameter, Outside:	24"	28"	32"
B-Height, Outside Wall:	35"	39"	43"
Inlet Fitting:	E-2"MPT	C-4"FPT	C-4"FPT
Outlet Fitting:	C-2"MPT	D-4"FPT	D-4"FPT
Drain Fitting:	E-2"MPT	E-I"FPT	E-I"FPT
Carbon Weight, Lbs.:	150	300	400
Max. Recommended Flow Rate, CFM:	100	180	250
Maximum Pressure, psig:	10	7	7
Max. design Temp., Deg F:	140	140	140
Flow Direction:	Upflow	Upflow	Upflow

Activated Carbon - The General vapor adsorbers are filled with virgin, high activity GC C-40 pelletized carbon. Other virgin coal, coconut shell, reactivated or impregnated carbons are available.

Removable Lid - 16 gauge lid with ring & bolt closure and poly-clad cellulose gasket.

Connections - Metal connectors with standard pipe threads insure easy, durable and leakproof hookup to your system. Unions or quick connect fittings are advised to make drum exchange easy. Drains let you remove any accumulated condensate.

Flow Distributors - The 55 gallon barrel uses an air chamber to insure even distribution of the air flow through the carbon. Low pressure drop, slotted Schedule 40 PVC collectors are used in the 85 gallon and 110 gallon drums for proper flow distribution. Stainless Steel internals and drums are available for special applications.

Coatings - The General pollution control barrels are coated on the inside with heat cured phenolic epoxy. The outside coating is industrial enamel. A polyethylene liner is available for extra corrosion resistance for the 55 gallon and 85 gallon units.

Installation & Start Up - The General air pollution control barrel requires no special procedure for start up. Just connect the inlet and outlet to the treatment system and start it up. Multiple units are usually connected in series with testing advised between the units to determine when the first unit needs to be changed out.

Maintenance - Once connected, **The General** requires no maintenance other than the monitoring of the influent and effluent air streams and the operating pressure of the system. Monitoring the air stream into the last Air Pollution Control Barrel in series mode is a recommended safeguard against breakthrough in the final discharge. When the concentration of contaminants in the outflow equals the concentration in the inflow, **The General** has reached its removal capacity and should be removed from the service. The working life of each adsorber is dependent upon the type of contaminant in the air as well as its concentration and the air flow rate. A pressure relief device is advised to prevent damage to the canister in the event of excessive pressure buildup.

Recharging The General - Once the carbon has reached its pollutant removal capacity, the unit should be removed and replaced with a fresh one. To purchase replacement carbon or to arrange for a carbon change out, please contact our office.

Disposal - Dispose of the spent carbon in accordance with Federal, State and Local regulations.

WARNING!

Wet activated carbon removes oxygen from air causing a severe hazard to workers inside carbon vessels. Confined space/low oxygen procedures should be put in place before any entry is made. Such procedures should comply with all applicable local, state and federal guidelines.

---

33 Paterson Street • Paterson, NJ 07501 • Tel: 973 523-2223 Fax: 973 523-1494

© 2004 General Carbon Corp.
Site Designed By Simlab.net

ATTACHMENT 4

TABLE 1
SOIL VAPOR EXTRACTION WELL AND PIEZOMETER INSTALLATION CONSTRUCTION
SITE 1 - SOIL VAPOR EXTRACTION PILOT STUDY
NWIRP BETHPAGE, BETHPAGE NEW YORK

Well ID	Boring Depth (ft-bgs)	Soil Sampling	Screen (ft-bgs)	Size Diameter/ Slot (inch)	Material	Well Completion
SVE-101I	35	Use SVE-101D data	25 to 35	2/0.020	PVC	No 2 sand to 2 feet above screen, 2-foot bentonite seal, cement/bentonite to ground surface, one foot stickup, no casing.
SVE-101D	60	Split spoon 25 to 60 feet bgs	approx. 40 to 60	2/0.010	PVC	No 2 sand to 2 feet above screen, 2-foot bentonite seal, cement/bentonite to ground surface, one foot stickup, no casing.
BPS1-PZ2002S	10	None	8 to 10	1/0.010	PVC	No. 1 sand to approx 3 feet above screen, sand/bentonite from approximately 3 feet feet above well screen to ground surface.
BPS1-PZ2002I	25	None	23 to 25	1/0.010	PVC	No. 1 sand to approx 5 feet above screen, sand/bentonite from approximately 5 to 10 feet above well screen, sand to ground surface.
BPS1-PZ2002D	42	None	38 to 40	1/0.010	PVC	Same as BPS1-PZ2002I
BPS1-PZ2003I	25	None	23 to 25	1/0.010	PVC	Same as BPS1-PZ2002I
BPS1-PZ2003D	42	None	38 to 40	1/0.010	PVC	Same as BPS1-PZ2002I
BPS1-PZ2007I	25	None	23 to 25	1/0.010	PVC	Same as BPS1-PZ2002I
BPS1-PZ2007D	42	None	38 to 40	1/0.010	PVC	Same as BPS1-PZ2002I

Table 2
Pressure/Flow Rate Reading Logsheet
Site 1 - Soil Vapor Containment System
NWIRP Bethpage, New York

Monitoring Point	Test Number	Start Date	Start Time	Vacuum/ Pressure (in H_2O)	Flow (ft/min)	Notes/Observations
SVE-101D	1					
SVE-101I	1					
Pre-Blower	1					
Post Blower/Pre Carbon	1					
SVE-101D	2					
SVE-101I	2					
Pre-Blower	2					
Post Blower/Pre Carbon	2					
SVE-101D	3					
SVE-101I	3					
Pre-Blower	3					
Post Blower/Pre Carbon	3					
SVE-101D	4					
SVE-101I	4					
Pre-Blower	4					
Post Blower/Pre Carbon	4					
SVE-101D	5					
SVE-101I	5					
Pre-Blower	5					
Post Blower/Pre Carbon	5					

Table 3
Piezometer Reading Logsheet
Site 1 - Soil Vapor Containment System
NWIRP Bethpage, New York

Test:		Start Date/Time:		Complete Date/Time:	
SVE 1 Target Rate:		SVE 2 Target Rate:		Field Staff:	
SVE 1 Actual Rate:		SVE 2 Actual Rate:			
		Time:			
Monitoring Point	Distance from BPS1-SVE101 (feet)	Measurement			
BPS1-SVE101	0	Pressure			
BPS1-SVE101	0	Flow			
BPS1-SVE102	5	Pressure			
BPS1-SVE102	5	Flow			
SVPM 11	190	Pressure			
SVPM 11S	190	Pressure			
SVPM 12	60	Pressure			
SVPM 12S	60	Pressure			
BPS1-MW1	90	Pressure			
EW-1	50	Pressure			
EW-5	100	Pressure			
BPS1-PZ2002S	80	Pressure			
BPS1-PZ2002I	80	Pressure			
BPS1-PZ2002D	80	Pressure			
BPS1-PZ2003I	250	Pressure			
BPS1-PZ2003D	250	Pressure			
BPS1-PZ2007I	280	Pressure			
BPS1-PZ2007D	280	Pressure			

Notes/Observations:

Test 1: 20 cfm, 20 hours, readings at 2, 4, and 18 hours (M1200-T0800))
Test 2: 40 cfm, 8 hours, readings at 2, 4, and 8 hours (T0800-T1600)
Test 3: 60 cfm, 20 hours, readings at 16, 18, and 20 hours (T1600-W1200)
Test 4: 80 cfm, 20 hours, readings at 2, 4, and 20 hours (W1200-Th0800)
Test 5: 100 cfm, 24 hours, readings at 4, 8, 24 hours (Th0800-F0800)

Tests 1 and 3 can be shortened by 1 to 2 hours if required.

	Velocity (ft/min)	
cfm	2" dia PVC	4" dia PVC
20	917	229
40	1,834	459
60	2,752	688
80	3,669	917
100	4,586	1,146