N60087.AR.000220
NAS BRUNSWICK
5090.3a

# U.S. DEPARTMENT OF THE NAVY

## INSTALLATION RESTORATION PROGRAM

## NAVAL AIR STATION, BRUNSWICK

BRUNSWICK, MAINE

# DRAFT FINAL SUPPLEMENTAL RI REPORT

# VOLUME 3 APPENDICIES K-Q

CONTRACT: N62472-84-C-1108

E.C. JORDAN PROJECT NO. 4607-55

AUGUST 1991

# APPENDIX K

# STREAM DISCHARGE CALCULATIONS

Meas. No. .....

Comp. by .....

Checked by .....

## DISCHARGE MEASUREMENT NOTES

Sta. No. MB 1 Mere Brook

35 feet downgradient of outfalls near Hotel gate (weapons area)

Date 10-4, 1990 Party Sandin, Miller

Width ..... Area ..... Vel. ..... G. H. ..... Disch. .....

Method ..... No. secs. ..... G. H. change ..... in ..... hrs. Susp. .....

Method coef. ..... Hor. angle coef. ..... Susp. coef. ..... Meter No. .....

| GAGE READINGS | | | | |
|---|---|---|---|---|
| Time | | Recorder | Inside | Outside |
| | | | | |
| | | | | |
| | | | | |
| | | | | |
| | | | | |
| | | | | |
| | | | | |
| | | | | |
| Weighted M. G. H. | | | | |
| G. H. correction | | | | |
| Correct M. G. H. | | | | |

Type of meter Pygmy Current

Date rated ..... for rod, other.

Meter ..... ft. above bottom of weight.

Spin before meas. ..... after .....

Meas. plots .... % diff. from rating .....

Wading, cable, ice, boat, upstr., downstr., side bridge ..... feet, mile, above, below gage, and .....

Check-bar, found ..... changed to ..... at .....

Correct .....

Levels obtained .....

Measurement rated excellent (2%), good (5%), fair (8%), poor (over 8%), based on following conditions: Cross section good

Flow good Weather partly cloudy

Other ..... Air .....°F @ .....

Gage ..... Water .....°F @ .....

..... Record removed ..... Intake flushed U/L .....

Remarks .....

| Dist. from initial point | Width | Depth | Depth of obs. | Revolutions | Time in seconds | VELOCITY At point | VELOCITY Mean in vertical | Adjusted for hor. angle or ..... | Area | Discharge |
|---|---|---|---|---|---|---|---|---|---|---|
| .25 | .5 | .7* | | 6* | 30 | .2 | | | .35 | .070 |
| 1 | 1 | .7 | | 9 | | .3 | | | .7 | .210 |
| 2 | 1 | .9 | | 8 | | .27 | | | .9 | .243 |
| 3 | 1 | .78 | | 1 | | .03 | | | .78 | .023 |
| 4 | 1 | .6 | | 6 | | .2 | | | .6 | .120 |
| 5 | 1 | .44 | | 1* | | .03 | | | .44 | .013 |
| 6 | 1 | .38 | | 1* | | .03 | | | .38 | .011 |
| 7 | 1 | .32 | | 9 | | .3 | | | .32 | .096 |
| 8 | 1 | .42 | | 7 | | .23 | | | .42 | .097 |
| 9 | 1 | .55 | | 10 | | .33 | | | .55 | .182 |
| 10 | 1 | .62 | | 7 | | .23 | | | .62 | .143 |
| 11 | 1 | .7 | | 10 | | .33 | | | .7 | .231 |
| 12 | 1 | .83 | | 16 | | .53 | | | .83 | .440 |
| 13 | 1 | 1.0 | | 15 | | .50 | | | 1.0 | .500 |
| 14 | 1 | .81 | | 11 | | .37 | | | .81 | .300 |
| 15 | 1 | .86 | | 4 | | .13 | | | .86 | .112 |
| 15.7 | .4 | .32 | | 2* | | .07 | | | .13 | .009 |
| 16.1 | .5 | .2* | | 1* | | .03 | | | .1 | .003 |
| 16.4 | edge of stream | | | | | | | | | |
| | | | | | | | | | | 2.80 cfs |

* estimated values

Meas. No. .....

Comp. by .....

Checked by .....

## DISCHARGE MEASUREMENT NOTES

Sta. No. MB 2

Culvert east of Merriconeag Road - Downgradient of Weapons area

Date 10-4, 1990 Party Sandin, V. Miller

Width ..... Area ..... Vel. ..... G. H. ..... Disch. .....

Method ..... No. secs. ..... G. H. change ..... in ..... hrs. Susp. .....

Method coef. ..... Hor. angle coef. ..... Susp. coef. ..... Meter No. .....

| GAGE READINGS | | | | |
|---|---|---|---|---|
| Time | | Recorder | Inside | Outside |
| | | | | |
| Weighted M. G. H. | | | | |
| G. H. correction | | | | |
| Correct M. G. H. | | | | |

Type of meter Pygmy Current meter

Date rated ..... for rod, other.

Meter ..... ft. above bottom of weight.

Spin before meas. ..... after .....

Meas. plots .... % diff. from rating .....

Wading, cable, ice, boat, upstr., downstr., side bridge ..... feet, mile, above, below gage, and .....

Check-bar, found .....

changed to ..... at .....

Correct .....

Levels obtained .....

Measurement rated excellent (2%), good (5%), fair (8%), poor (over 8%), based on following conditions: Cross section excellent

Flow excellent Weather overcast

Other ..... Air .....°F @ .....

Gage ..... Water .....°F @ .....

..... Record removed ..... Intake flushed U L .....

Remarks culvert is approximately 10 feet in diameter and has deep corrugations (0.15')
Bottom plate was left attached to produce averaged depths of measurement.

| Dist. from initial point | Width | Depth | Depth | Revolutions | Time in seconds | VELOCITY At point | VELOCITY Mean in vertical | Adjusted for hor. angle or ..... | Area | Discharge |
|---|---|---|---|---|---|---|---|---|---|---|
| | | | | | | ft/sec | | | $ft^2$ | $ft^3/sec$ |
| 0.25 | 0.5 | 0.2* | | 10* | 30 | 0.33 | | | 0.10 | 0.033 |
| 1 | 1.0 | 0.6 | | 17 | 30 | 0.57 | | | 0.6 | 0.342 |
| 2 | 1.0 | 1.15 | | 18 | 30 | 0.60 | | | 1.15 | 0.690 |
| 3 | 1.0 | 1.25 | | 22 | 30 | 0.73 | | | 1.25 | 0.913 |
| 4 | 1.0 | 1.20 | | 13 | 30 | 0.43 | | | 1.20 | 0.516 |
| 5 | 1.0 | 0.9 | | 15 | 30 | 0.50 | | | 0.90 | 0.45 |
| | | | | | | | | | | 2.94 cfs |

* approximated value

Meas. No. .....

Comp. by .....

Checked by .....

# DISCHARGE MEASUREMENT NOTES

Sta. No. MB 3

MERE brook 30 feet above junction with Merriconeag

Date 10-4, 19 90 Party Sandin, Miller

Width ..... Area ..... Vel. ..... G. H. ..... Disch. .....

Method ..... No. secs. ..... G. H. change ..... in ..... hrs. Susp. .....

Method coef. ..... Hor. angle coef. ..... Susp. coef. ..... Meter No. .....

| GAGE READINGS | | | | |
|---|---|---|---|---|
| Time | | Recorder | Inside | Outside |
| | | | | |
| Weighted M. G. H. | | | | |
| G. H. correction | | | | |
| Correct M. G. H. | | | | |

Type of meter Pygmy Current

Date rated ..... for rod, other.

Meter ..... ft. above bottom of weight.

Spin before meas. ..... after .....

Meas. plots .... % diff. from rating .....

Wading, cable, ice, boat, upstr., downstr., side bridge ..... feet, mile, above, below gage, and .....

Check-bar, found .....

changed to ..... at .....

Correct .....

Levels obtained .....

Measurement rated excellent (2%), good (5%), fair (8%), poor (over 8%), based on following conditions: Cross section good

Flow steady Weather overcast

Other ..... Air .....°F @ .....

Gage ..... Water .....°F @ .....

..... Record removed ..... Intake flushed U/L .....

Remarks .....

| Dist. from initial point | Width | Depth | Depth of flow | Revolutions | Time in seconds | VELOCITY At point | VELOCITY Mean in vertical | Adjusted for hor. angle or ..... | Area | Discharge |
|---|---|---|---|---|---|---|---|---|---|---|
| | | | | | | ft/sec | | | $ft^2$ | $ft^3/sec$ |
| .2 | .4 | .1* | | 1* | 30 | .03 | | | .04 | 0.001 |
| .6 | .3 | .22 | | 4 | | .13 | | | .07 | 0.009 |
| 1.0 | .5 | .32 | | 10 | | .33 | | | .16 | 0.053 |
| 1.5 | .5 | .50 | | 11 | | .37 | | | .25 | 0.093 |
| 2 | .5 | .60 | | 12 | | .40 | | | .30 | 0.120 |
| 2.5 | .5 | .60 | | 9 | | .30 | | | .30 | 0.090 |
| 3 | .5 | 0.56 | | 5 | | .17 | | | .28 | 0.048 |
| 3.5 | .5 | .63 | | 5 | | .17 | | | .32 | 0.054 |
| 4 | .5 | .82 | | 6 | | .20 | | | .41 | 0.082 |
| 4.5 | .5 | 1.0 | | 11 | | .37 | | | .50 | 0.185 |
| 5 | .5 | 1.1 | | 16 | | .53 | | | .55 | 0.292 |
| 5.5 | .5 | 1.13 | | 20 | | .67 | | | .56 | 0.375 |
| 6 | .5 | 1.10 | | 16 | | .53 | | | .55 | 0.292 |
| 6.5 | .5 | 1.20 | | 22 | | .73 | | | .60 | 0.438 |
| 7 | .5 | 1.0 | | 18 | | .60 | | | .50 | 0.300 |
| 7.5 | .5 | 0.9 | | 16 | | .53 | | | .45 | 0.239 |
| 8 | .5 | .83 | | 13 | | .43 | | | .42 | 0.181 |
| 8.5 | .5 | .83 | | 10 | | .33 | | | .42 | 0.139 |
| 9 | .5 | .80 | | 7 | | .23 | | | .40 | 0.092 |
| 9.5 | .5 | .60 | | 3 | | .10 | | | .30 | 0.030 |
| 10 | .5 | .40 | | 2 | | .07 | | | .20 | 0.014 |
| 10.5 | .5 | .30 | | 1* | | .03 | | | .15 | 0.005 |
| 11 | .5 | .20 | | 1* | | .03 | | | .10 | 0.003 |
| 11.5 | .5 | .05 | | 1* | | .03 | | | .03 | 0.001 |
| 11.75 | edge of stream | | | | | | | | | |
| | | | | | | | | | | 3.14 cfs. |

* estimated values

Meas. No. .....

Comp. by .....

Checked by .....

## DISCHARGE MEASUREMENT NOTES

Sta. No. MB-4

Mere Brook 200 feet below confluence

Date 10-4, 1990 Party Sandin, Miller

Width ..... Area ..... Vel. ..... G. H. ..... Disch. .....

Method ..... No. secs. ..... G. H. change ..... in ..... hrs. Susp. .....

Method coef. ..... Hor. angle coef. ..... Susp. coef. ..... Meter No. .....

| GAGE READINGS | | | | |
|---|---|---|---|---|
| Time | | Recorder | Inside | Outside |
| | | | | |
| Weighted M. G. H. | | | | |
| G. H. correction | | | | |
| Correct M. G. H. | | | | |

Type of meter Pygmy Current

Date rated ..... for rod, other.

Meter ..... ft. above bottom of weight.

Spin before meas. ..... after .....

Meas. plots .... % diff. from rating .....

Wading, cable, ice, boat, upstr., downstr., side bridge ..... feet, mile, above, below gage, and .....

Check-bar, found .....

changed to ..... at .....

Correct .....

Levels obtained .....

Measurement rated excellent (2%), good (5%), fair (8%), poor (over 8%), based on following conditions: Cross section Fair some bottom debris/grass

Flow steady Weather overcast

Other ..... Air .....°F @ .....

Gage ..... Water .....°F @ .....

..... Record removed ..... Intake flushed .....

Remarks .....

| Dist. from initial point | Width | Depth | 0.2 | 0.8 | Revolutions | Time in seconds | VELOCITY At point | VELOCITY Mean in vertical | Adjusted for hor. angle or ..... | Area | Discharge |
|---|---|---|---|---|---|---|---|---|---|---|---|
| | | | | | | | ft/sec | | | ft² | ft³/sec |
| 0.5 | 1 | .1* | | | 1* | 30 | .03 | | | .10 | .003 |
| 2.0 | 2 | .37 | | | 2 | | .07 | | | .74 | .052 |
| 4.0 | 2 | .75 | | | 9 | | .30 | | | 1.50 | .450 |
| * 5.25 | 0.5 | .7* | | | 10* | | .33 | | | .35 | .116 |
| 6.0 | 1 | .63 | | | 11 | | .37 | | | .63 | .233 |
| 7.0 | 1 | .68 | | | 14 | | .47 | | | .68 | .320 |
| 8.0 | 1 | .64 | | | 28 | | .93 | | | .64 | .595 |
| 9.0 | 1 | .63 | | | 10 | | .33 | | | .63 | .208 |
| 10.0 | 1 | .63 | | | 19 | | .63 | | | .63 | .397 |
| 11.0 | 1 | .68 | | | 3 | | .10 | | | .68 | .068 |
| 12.0 | 1 | .72 | | | 10 | | .33 | | | .72 | .238 |
| 13.0 | 1 | .80 | | | 18 | | .60 | | | .80 | .480 |
| 14.0 | 1 | .50 | | | 4* | | .13 | | | .50 | .065 |
| 15.0 | 1 | .35 | | | 2* | | .07 | | | .35 | .025 |
| 15.6 | .3 | .1* | | | 0 | | 0 | | | .03 | 0 |
| 15.8 | edge of stream | | | | | | | | | | |
| | | | | | | | | | | | 3.25 cfs |

* estimated values

Meas. No. .....

Comp. by .....

Checked by .....

## DISCHARGE MEASUREMENT NOTES

Sta. No. MB5

Flat culvert (9' wide) on Monconeag @ New Gurnett Rd

Date 9-24, 1990 Party E. SANDIN, VICKI MILLER

Width ..... Area ..... Vel. ..... G. H. ..... Disch. .....

Method ..... No. secs. ..... G. H. change ..... in ..... hrs. Susp. .....

Method coef. ..... Hor. angle coef. ..... Susp. coef. ..... Meter No. .....

| GAGE READINGS | | | | |
|---|---|---|---|---|
| Time | | Recorder | Inside | Outside |
| | | | | |
| | | | | |
| | | | | |
| | | | | |
| | | | | |
| | | | | |
| | | | | |
| | | | | |
| | | | | |
| Weighted M. G. H. | | | | |
| G. H. correction | | | | |
| Correct M. G. H. | | | | |

Type of meter .....

Date rated ..... .... for rod, other.

Meter ..... ft. above bottom of weight.

Spin before meas. ..... after .....

Meas. plots .... % diff. from rating .....

Wading, cable, ice, boat, upstr., downstr., side bridge ..... feet, mile, above, below gage, and .....

Check-bar, found .....

changed to ..... at .....

Correct .....

Levels obtained .....

Measurement rated excellent (2%), good (5%), fair (8%), poor (over 8%), based on following conditions: Cross section excellent

Flow ..... Weather .....

Other ..... Air .....°F @ .....

Gage ..... Water .....°F @ .....

..... Record removed ..... Intake flushed U L .....

Remarks .....

| Dist. from initial point | Width | Depth | Depth of sample | Revolutions | Time in seconds | VELOCITY At point | VELOCITY Mean in vertical | Adjusted for hor. angle or ..... | Area | Discharge |
|---|---|---|---|---|---|---|---|---|---|---|
| | | | | | | ft/sec | | | ft² | ft³/sec |
| | | | | | | | | | | |
| | | | | | | | | | | |
| .5 | 1.0 | .40 | | 27 | 30 | .9 | | | .40 | .36 |
| 1.5 | 1.0 | .46 | | 29 | 30 | .97 | | | .46 | .45 |
| 2.5 | 1.0 | .46 | | 32 | 30 | 1.07 | | | .46 | .49 |
| 3.5 | 1.0 | .46 | | 44 | 30 | 1.47 | | | .46 | .68 |
| 4.5 | 1.0 | .46 | | 45 | 30 | 1.50 | | | .46 | .69 |
| 5.5 | 1.0 | .46 | | 42 | 30 | 1.40 | | | .46 | .64 |
| 6.5 | 1.0 | .46 | | 46 | 30 | 1.53 | | | .46 | .70 |
| 7.5 | 1.0 | .46 | | 50 | 30 | 1.67 | | | .46 | .77 |
| 8.5 | 1.0 | .42 | | 37 | 30 | 1.23 | | | .42 | .52 |
| | | | | | | | | | | 5.3 cfs |

Meas. No. .....

Comp. by .....

Checked by .....

# DISCHARGE MEASUREMENT NOTES

Sta. No. MB 5

mere brook at upgradient edge of rectangular culvert which crosses New Garnett Road

Date 10-4, 1990 Party Sandin, Miller

Width ..... Area ..... Vel. ..... G. H. ..... Disch. .....

Method ..... No. secs. ..... G. H. change ..... in ..... hrs. Susp. .....

Method coef. ..... Hor. angle coef. ..... Susp. coef. ..... Meter No. .....

Type of meter Pygmy Current

Date rated ..... for rod, other.

Meter ..... ft. above bottom of weight.

Spin before meas. ..... after .....

Meas. plots .... % diff. from rating .....

Wading, cable, ice, boat, upstr., downstr., side bridge ..... feet, mile, above, below gage, and .....

Check-bar, found .....

changed to ..... at .....

Correct .....

Levels obtained .....

GAGE READINGS

| Time | | Recorder | Inside | Outside |
|---|---|---|---|---|
| | | | | |
| Weighted M. G. H. | | | | |
| G. H. correction | | | | |
| Correct M. G. H. | | | | |

Measurement rated excellent (2%), good (5%), fair (8%), poor (over 8%), based on following conditions: Cross section excellent

Flow excellent Weather .....

Other ..... Air .....°F @ .....

Gage ..... Water .....°F @ .....

..... Record removed ..... Intake flushed U L .....

Remarks .....

| Dist. from initial point | Width | Depth | Depth of ice | Revolutions | Time in seconds | VELOCITY At point | VELOCITY Mean in vertical | Adjusted for hor. angle or ..... | Area | Discharge |
|---|---|---|---|---|---|---|---|---|---|---|
| | | | | | | ft/sec | | | | |
| .25 | .5 | .25* | | 30 | 20 | .67 | | | .13 | .087 |
| 1 | 1 | .41 | | | 30 | 1.0 | | | .41 | .41 |
| 2 | 1 | .40 | | | 45 | 1.5 | | | .40 | .6 |
| 3 | 1 | .40 | | | 37 | 1.23 | | | .40 | .492 |
| 4 | 1 | .40 | | | 37 | 1.23 | | | .40 | .492 |
| 5 | 1 | .40 | | | 42 | 1.4 | | | .40 | .56 |
| 6 | 1 | .40 | | | 41 | 1.37 | | | .40 | .548 |
| 7 | 1 | .39 | | | 39 | 1.3 | | | .39 | .507 |
| 8 | 1 | .38 | | | 44 | 1.47 | | | .38 | .559 |
| 8.75 | .5 | .32 | | | 32 | 1.07 | | | .16 | .171 |
| 9 | edge of culvert | | | | | | | | | |
| | | | | | | | | | | 4.43 cfs |

* estimated values

Meas. No. .....

Comp. by .....

Checked by .....

## DISCHARGE MEASUREMENT NOTES

Sta. No. MS 1

culvert crossing Sandy Road

Date 9/24 and 10/4, 19..... Party Sandin, Miller

Width ..... Area ..... Vel. ..... G. H. ..... Disch. .....

Method ..... No. secs. ..... G. H. change ..... in ..... hrs. Susp. .....

Method coef. ..... Hor. angle coef. ..... Susp. coef. ..... Meter No. .....

| GAGE READINGS | | | | |
|---|---|---|---|---|
| Time | | Recorder | Inside | Outside |
| | | | | |
| Weighted M. G. H. | | | | |
| G. H. correction | | | | |
| Correct M. G. H. | | | | |

Type of meter .....

Date rated ..... .... for rod, other.

Meter ..... ft. above bottom of weight.

Spin before meas. ..... after .....

Meas. plots .... % diff. from rating .....

Wading, cable, ice, boat, upstr., downstr., side bridge ..... feet, mile, above, below gage, and .....

Check-bar, found .....

changed to ..... at .....

Correct .....

Levels obtained .....

/ Measurement rated excellent (2%), good (5%), fair (8%), poor (over 8%), based on following conditions: Cross section fair/poor

Flow fair Weather sunny 70° F

Other ..... Air .....°F @ .....

Gage ..... Water .....°F @ .....

..... Record removed ..... Intake flushed .....

Remarks measurement must be taken @ mouth of culvert because flow is so slow in discharge pool. culvert mouth is broken @ western edge and therefor the cross section and flow profile is not consistent.

| Dist. from initial point | Width | Depth | Depth of ice | Revolutions | Time in seconds | VELOCITY At point | VELOCITY Mean in vertical | Adjusted for hor. angle or ..... | Area | Discharge |
|---|---|---|---|---|---|---|---|---|---|---|
| 9/24/90 | | | | | | | | | | |
| .13 | .25 | .03* | | 21* | 30 | .70 | | | .008 | .006 |
| .5 | .5 | .13 | | 43 | | 1.43 | | | .065 | .093 |
| 1.0 | .5 | .18 | | 83 | | 2.77 | | | .090 | .249 |
| 1.5 | .5 | .07 | | 34 | | 1.13 | | | .035 | .040 |
| 1.88 | .25 | .02 | | 17* | | .57 | | | .005 | .003 |
| | | | | | | | | | | 0.39 cfs |
| 10/4/90 | | | | | | | | | | |
| .13 | .25 | .1* | | 1 | 30 | .03 | | | .03 | .001 |
| .5 | .5 | .5 | | 3 | 30 | .1 | | | .25 | .025 |
| 1.0 | .5 | .53 | | 12 | 30 | .4 | | | .27 | .108 |
| 1.5 | .5 | .6 | | 13 | 30 | .43 | | | .30 | .129 |
| 2.0 | .5 | .5 | | 11 | 30 | .37 | | | .25 | .093 |
| 2.5 | .5 | .45 | | 10 | 30 | .33 | | | .23 | .076 |
| 2.25 | 1.5 | .1* | | 3* | 30 | .1 | | | .15 | .015 |
| | | | | | | | | | | .447 |

* estimated

Meas. No. .....

Comp. by .....

Checked by .....

# DISCHARGE MEASUREMENT NOTES

Sta. No. MS 4

Culvert below picnic area pond

Date 10-4-90, 1990 Party SANDIN, JOHNSON

Width ..... Area ..... Vel. ..... G. H. ..... Disch. .....

Method ..... No. secs. ..... G. H. change ..... in ..... hrs. Susp. .....

Method coef. ..... Hor. angle coef. ..... Susp. coef. ..... Meter No. .....

| GAGE READINGS | | | | |
|---|---|---|---|---|
| Time | | Recorder | Inside | Outside |
| | | | | |
| Weighted M. G. H. | | | | |
| G. H. correction | | | | |
| Correct M. G. H. | | | | |

Type of meter PIGMY CURRENT

Date rated ..... for rod, other.

Meter ..... ft. above bottom of weight.

Spin before meas. ..... after .....

Meas. plots .... % diff. from rating .....

Wading, cable, ice, boat, upstr., downstr., side bridge ..... feet, mile, above, below gage, and .....

Check-bar, found ..... changed to ..... at .....

Correct .....

Levels obtained .....

Measurement rated excellent (2%), good (5%), fair (8%), poor (over 8%), based on following conditions: Cross section .....

Flow steady Weather sunny

Other ..... Air .....°F @ .....

Gage ..... Water .....°F @ .....

..... Record removed ..... Intake flushed U/L .....

Remarks Two successive readings were collected

average discharge = 0.92 cfs.

| | Dist. from initial point | Width | Depth | 0.6 | Revolutions | Time in seconds | VELOCITY At point | VELOCITY Mean in vertical | Adjusted for hor. angle or ..... | Area | Discharge |
|---|---|---|---|---|---|---|---|---|---|---|---|
| | | | | | | | ft/sec | | | ft² | ft³/sec |
| A | 0.3 | 0.6 | 0.50 | | 15 | 30 | 0.50 | | | 0.30 | 0.15 |
| | 0.9 | 0.6 | 0.88 | | 15 | 30 | 0.50 | | | 0.53 | 0.27 |
| | 1.5 | 0.6 | 0.90 | | 19 | 30 | 0.63 | | | 0.54 | .34 |
| | 2.1 | 0.6 | 0.60 | | 12 | 30 | 0.40 | | | 0.36 | 0.14 |
| | 2.4 | edge | | | | | | | | | 0.9 cfs |
| B | 0.3 | 0.6 | .5 | | 14 | 30 | 0.47 | | | 0.30 | 0.14 |
| | 0.9 | 0.6 | .87 | | 16 | 30 | 0.53 | | | 0.52 | 0.28 |
| | 1.5 | 0.6 | .90 | | 19 | 30 | 0.63 | | | 0.54 | 0.34 |
| | 2.1 | 0.6 | .55 | | 16 | 30 | 0.53 | | | 0.33 | 0.17 |
| | 2.4 | edge | | | | | | | | | 0.93 cfs |

# 4607-44

Meas. No. .....

Comp. by .....

Checked by .....

## DISCHARGE MEASUREMENT NOTES

Sta. No. MS4
Culvert below Picnic Area Pond

Date 9-24, 1990 Party E. SANDIN, V. MILLER

Width ..... Area ..... Vel. ..... G. H. ..... Disch. .....

Method ..... No. secs. ..... G. H. change ..... in ..... hrs. Susp. .....

Method coef. ..... Hor. angle coef. ..... Susp. coef. ..... Meter No. .....

| GAGE READINGS | | | | |
|---|---|---|---|---|
| Time | | Recorder | Inside | Outside |
| | | | | |
| | | | | |
| | | | | |
| | | | | |
| | | | | |
| | | | | |
| | | | | |
| | | | | |
| Weighted M. G. H. | | | | |
| G. H. correction | | | | |
| Correct M. G. H. | | | | |

Type of meter PYGMY CURRENT

Date rated ..... for rod, other.

Meter ..... ft. above bottom of weight.

Spin before meas. ..... after .....

Meas. plots .... % diff. from rating .....

Wading, cable, ice, boat, upstr., downstr., side bridge ..... feet, mile, above, below gage, and .....

Check-bar, found .....

changed to ..... at .....

Correct .....

Levels obtained .....

Measurement rated excellent (2%), good (5%), fair (8%), poor (over 8%), based on following conditions: Cross section excellent (culvert)

Flow steady Weather sunny 65° F

Other ..... Air .....°F @ .....

Gage ..... Water .....°F @ .....

..... Record removed ..... Intake flushed U L .....

Remarks .....

READINGS A and B taken at 9:00 AM

READING C taken at 2:30 PM

| | Dist. from initial point | Width | Depth | Observation depth | Revolutions | Time in seconds | VELOCITY At point | VELOCITY Mean in vertical | Adjusted for hor. angle or ..... | Area | Discharge |
|---|---|---|---|---|---|---|---|---|---|---|---|
| | | | | | | | ft/sec | | | ft² | ft³/sec |
| A | | | | | | | | | | | |
| | 0.13 | 0.25 | 0.19* | | 26* | 60 | .43 | | | 0.05 | 0.022 |
| | 0.5 | 0.5 | 0.77 | | 51 | 60 | .85 | | | 0.39 | 0.332 |
| | 1.0 | 0.5 | 1.0 | | 63 | 60 | 1.05 | | | 0.50 | 0.525 |
| | 1.5 | 0.5 | 0.93 | | 65 | 60 | 1.08 | | | 0.47 | 0.508 |
| | 2.0 | 0.5 | 0.70 | | 64 | 60 | 1.07 | | | 0.35 | 0.375 |
| | 2.32 | 0.15 | 0.18 | | 32* | 60 | .53 | | | 0.03 | 0.016 |
| | | | | | | | | | | | 1.79 cfs |
| B | 0.08 | 0.17 | 0.14* | | 25* | 60 | .42 | | | .024 | 0.01 |
| | 0.33 | 0.33 | 0.55 | | 50 | 60 | .83 | | | .18 | 0.15 |
| | 0.67 | 0.33 | 0.80 | | 52 | 60 | .87 | | | .26 | 0.23 |
| | 1.00 | 0.33 | 0.95 | | 63 | 60 | 1.05 | | | .31 | 0.33 |
| | 1.33 | 0.33 | 0.95 | | 67 | 60 | 1.12 | | | .31 | 0.35 |
| | 1.67 | 0.33 | 0.9 | | 66 | 60 | 1.10 | | | .30 | 0.33 |
| | 2.00 | 0.33 | 0.72 | | 58 | 60 | 0.97 | | | .24 | 0.23 |
| | 2.28 | 0.23 | 0.18* | | 29* | 60 | 0.48 | | | .04 | 0.019 |
| | | | | | | | | | | | 1.65 cfs |
| C | 0.13 | .25 | 0.18* | | 14* | 30 | .47 | | | .045 | .021 |
| | 0.5 | .5 | 0.70 | | 28 | 30 | .93 | | | .35 | .33 |
| | 1.0 | .5 | 0.95 | | 32 | 30 | 1.07 | | | .48 | .51 |
| | 1.5 | .5 | 0.98 | | 36 | 30 | 1.20 | | | .49 | .59 |
| | 2.0 | .5 | 0.75 | | 32 | 30 | 1.07 | | | .38 | .41 |
| | 2.32 | .15 | 0.19* | | 16* | 30 | 0.53 | | | .029 | .015 |
| | | | | | | | | | | | 1.88 cfs |

* ESTIMATED VALUES

# 4607-44

Meas. No. .....

Comp. by .....

Checked by .....

## DISCHARGE MEASUREMENT NOTES

Sta. No. MS 5
downstream of old Gurnett Road below Picnic Area

Date 9-24, 19 90 Party E. Sandin U. Miller

Width ..... Area ..... Vel. ..... G. H. ..... Disch. .....

Method ..... No. secs. ..... G. H. change ..... in ..... hrs. Susp. .....

Method coef. ..... Hor. angle coef. ..... Susp. coef. ..... Meter No. .....

| GAGE READINGS | | | | |
|---|---|---|---|---|
| Time | | Recorder | Inside | Outside |
| | | | | |
| Weighted M. G. H. | | | | |
| G. H. correction | | | | |
| Correct M. G. H. | | | | |

Type of meter Pygmy Current

Date rated ..... for rod, other.

Meter ..... ft. above bottom of weight.

Spin before meas. ..... after .....

Meas. plots .... % diff. from rating .....

Wading, cable, ice, boat, upstr., downstr., side bridge ..... feet, mile, above, below gage, and .....

Check-bar, found .....

changed to ..... at .....

Correct .....

Levels obtained .....

Measurement rated excellent (2%), good (5%), fair (8%), poor (over 8%), based on following conditions: Cross section fair good – spongy root mass at one edge

Flow strong Weather sunny 65°

Other ..... Air .....°F @ .....

Gage ..... Water .....°F @ .....

..... Record removed ..... Intake flushed U/L .....

Remarks .....

where flow was not strong enough to turn meter, revolutions are estimated (assigned) a value 50% of lowest consistent reading (13).

| Dist. from initial point | Width | Depth | | Revolutions | Time in seconds | VELOCITY At point | VELOCITY Mean in vertical | Adjusted for hor. angle or ..... | Area | Discharge |
|---|---|---|---|---|---|---|---|---|---|---|
| .13 | .25 | .03 | | 0/3 | 30 | .10 | | | .01 ~~.008~~ | 0.001 |
| .5 | .5 | .1 | | 0/6 | | .20 | | | .05 | 0.010 |
| 1.0 | .5 | .15 | | 28 | | .93 | | | .08 | 0.074 |
| 1.5 | .5 | .3 | | 26 | | .87 | | | .15 | 0.131 |
| 2.0 | .5 | .4 | | 31 | | 1.03 | | | .20 | 0.206 |
| 2.5 | .5 | .4 | | 44 | | 1.47 | | | .20 | 0.294 |
| 3.0 | .5 | .55 | | 37 | | 1.23 | | | .28 | 0.344 |
| 3.5 | .5 | .6 | | 26 | | .87 | | | .30 | 0.261 |
| 4.0 | .5 | .5 | | 41 | | 1.37 | | | .25 | 0.343 |
| 4.5 | .5 | .45 | | 24 | | 0.80 | | | .23 | 0.184 |
| 5.0 | .5 | .3 | | 0/6 | | .20 | | | .15 | 0.030 |
| 5.5 | .5 | .25 | | 13 | | .43 | | | .13 | 0.056 |
| 6.0 | .5 | .2 | | 0/6 | | 0.20 | | | .10 | 0.020 |
| | | | | | | | | | | 1.95 cfs |

Meas. No. .....

Comp. by .....

Checked by .....

## DISCHARGE MEASUREMENT NOTES

Sta. No. MS 7

Merriconeag Stream 20 feet upgradient of junction with MERE Brook

Date 10-4 19 90 Party Sandin, Miller

Width ..... Area ..... Vel. ..... G. H. ..... Disch. .....

Method ..... No. secs. ..... G. H. change ..... in ..... hrs. Susp. .....

Method coef. ..... Hor. angle coef. ..... Susp. coef. ..... Meter No. .....

| GAGE READINGS | | | | |
|---|---|---|---|---|
| Time | | Recorder | Inside | Outside |
| | | | | |
| Weighted M. G. H. | | | | |
| G. H. correction | | | | |
| Correct M. G. H. | | | | |

Type of meter Pigmy Current

Date rated ..... for rod, other.

Meter ..... ft. above bottom of weight.

Spin before meas. ..... after .....

Meas. plots .... % diff. from rating .....

Wading, cable, ice, boat, upstr., downstr., side bridge ..... feet, mile, above, below gage, and .....

Check-bar, found .....

changed to ..... at .....

Correct .....

Levels obtained .....

Measurement rated excellent (2%), good (5%), fair (8%), poor (over 8%), based on following conditions: Cross section good

Flow steady Weather Overcast

Other ..... Air .....°F @ .....

Gage ..... Water .....°F @ .....

..... Record removed ..... Intake flushed U/L .....

Remarks .....

| Dist. from initial point | Width | Depth | Observation depth | Revolutions | Time in seconds | VELOCITY At point | VELOCITY Mean in vertical | Adjusted for hor. angle or ..... | Area | Discharge |
|---|---|---|---|---|---|---|---|---|---|---|
| | | | | | | ft/sec | | | ft² | ft³/sec |
| 0.4 | .8 | 0.07* | | 1* | 30 | .03 | | | .06 | .002 |
| 1.0 | .5 | .38 | | 4 | 30 | .13 | | | .19 | .025 |
| 1.5 | .5 | .50 | | 4 | 30 | .13 | | | .25 | .033 |
| 2.0 | .5 | .58 | | 9 | 30 | .30 | | | .29 | .087 |
| 2.5 | .5 | .65 | | 6 | 30 | .20 | | | .33 | .066 |
| 3.0 | .5 | .75 | | 12 | 30 | .40 | | | .38 | .152 |
| 3.5 | .5 | .75 | | 9 | 30 | .30 | | | .38 | .114 |
| 4.0 | .5 | .61 | | 11 | 30 | .37 | | | .31 | .115 |
| 4.5 | .5 | .50 | | 7 | 30 | .23 | | | .25 | .058 |
| 5.0 | .5 | .45 | | 6 | 30 | .20 | | | .23 | .046 |
| 5.5 | .5 | .42 | | 9 | 30 | .30 | | | .21 | .063 |
| 6.0 | .5 | .38 | | 8 | 30 | .27 | | | .19 | .051 |
| 6.5 | .5 | .31 | | 7 | 30 | .23 | | | .16 | .037 |
| 7.0 | .5 | .25 | | 12 | 30 | .40 | | | .13 | .052 |
| 7.38 | .25 | .12* | | 4* | 30 | .13 | | | .06 | .008 |
| 7.5 | edge of stream | | | | | | | | | 0.91 cfs |

* estimated values

#4607-44

Meas. No. .....

Comp. by .....

Checked by .....

## DISCHARGE MEASUREMENT NOTES

Sta. No. MS 6

SE of Gatchell cemetary on Merriconeag. above confluence w/ mere.

Date 9-24, 1990 Party E SANDIN, V. MILLER

Width ..... Area ..... Vel. ..... G. H. ..... Disch. .....

Method ..... No. secs. ..... G. H. change ..... in ..... hrs. Susp. .....

Method coef. ..... Hor. angle coef. ..... Susp. coef. ..... Meter No. .....

Type of meter Pygmy Current

Date rated ..... for rod, other.

Meter ..... ft. above bottom of weight.

Spin before meas. ..... after .....

Meas. plots .... % diff. from rating .....

Wading, cable, ice, boat, upstr., downstr., side bridge ..... feet, mile, above, below gage, and .....

Check-bar, found .....

changed to ..... at .....

Correct .....

Levels obtained .....

| GAGE READINGS | | | | |
|---|---|---|---|---|
| Time | | Recorder | Inside | Outside |
| | | | | |
| Weighted M. G. H. | | | | |
| G. H. correction | | | | |
| Correct M. G. H. | | | | |

Measurement rated excellent (2%), good (5%), fair (8%), poor (over 8%), based on following conditions: Cross section .....

Flow ..... Weather .....

Other ..... Air .....°F @ .....

Gage ..... Water .....°F @ .....

..... Record removed ..... Intake flushed U/L .....

Remarks .....

| Dist. from initial point | Width | Depth | Depth of Obs. | Revolutions | Time in seconds | VELOCITY At point | VELOCITY Mean in vertical | Adjusted for hor. angle or ..... | Area | Discharge |
|---|---|---|---|---|---|---|---|---|---|---|
| | | | | | | ft/sec | | | ft² | |
| .3 | .5 | .25 | | 9 | 30 | .3 | | | .125 | .038 |
| .8 | | .30 | | 10 | | .33 | | | .15 | .050 |
| 1.3 | | .40 | | 11 | | .37 | | | .20 | .074 |
| 1.8 | | .35 | | 11 | | .37 | | | .175 | .065 |
| 2.3 | | .32 | | 11 | | .37 | | | .16 | .059 |
| 2.8 | | .26 | | 7 | | .23 | | | .13 | .030 |
| 3.3 | | .42 | | 18 | | .60 | | | .21 | .126 |
| 3.8 | | .38 | | 19 | | .63 | | | .19 | .120 |
| 4.3 | | .40 | | 14 | | .47 | | | .20 | .094 |
| 4.8 | | .40 | | 22 | | .73 | | | .20 | .146 |
| 5.3 | | .56 | | 14 | | .47 | | | .28 | .132 |
| 5.8 | | .76 | | 18 | | .60 | | | .38 | .228 |
| 6.3 | | .78 | | 11 | | .37 | | | .39 | .149 |
| 6.8 | | .60 | | 11 | | .37 | | | .30 | .111 |
| 7.3 | | .30 | | 3* | | .10 | | | .15 | .015 |
| | | | | | | | | | | 1.43 cfs |

* Estimated because flow wasn't strong enough to turn meter

K-11

# APPENDIX L

## SUMMARY TABLES OF LABORATORY ANALYTICAL DATA, INCLUDING TENTATIVELY IDENTIFIED COMPOUNDS (TICs)

## DESCRIPTION OF LABORATORY ANALYTICAL PROCEDURES

The following sections address both laboratory QC and data quality verification procedures used for the Summer 1990 field activities at NASB.

### 1. Laboratory QC

#### 1.1 Analytical Protocols

The subcontracting laboratory generated the analytical results in accordance with the protocols specified by the USEPA for the National Contract Laboratory Program (CLP). The stringent quality control procedures outlined in the CLP protocols provide a preliminary level of assurance of data quality. The following QC procedures are required by the CLP protocols:

Organics

- holding times
- GC/MS tuning
- instrument calibration
- laboratory method blanks
- surrogate spike analysis
- matrix spike/matrix spike duplicate analysis
- internal standard performance
- pesticide instrument performance
- compound identification/quantitation

Inorganics

- holding times
- instrument calibration
- laboratory method blanks
- interference check sample analysis
- ICP serial dilution analysis
- matrix spike analysis
- duplicate sample analysis
- matrix spike analysis
- furnace atomic absorption QC
- laboratory control sample analysis

#### 1.2 Evaluation of Analytical Data

USEPA Level IV data validation was performed on all of the laboratory deliverables (analytical results and raw data) by both xperienced data reviewers and the project chemist. These validation procedures were in accordance with the USEPA "Functional Guidelines for Evaluating Organic Analyses" (February 1988) and the "Functional Guidelines for Evaluating Inorganics Analyses" (June 1988), including the current USEPA Region I revisions. Level IV data quality represents confirmational data characterized by

rigorous quality control and validation procedures and is adequate to support risk assessment, nforcement, and engineering alternative design.

Usability is based on validated sample results; the evaluation has been extended to include blank corrected samples where appropriate. Rejected results ("R" qualifier) represent unusable data since the analyte presence or absence is uncertain. Rejected results should not be used for a quantitative risk assessment ("Risk Assessment Guidance for Superfund", USEPA 540/1-89/002). In general sample results with qualifiers other than "R" are considered as usable.

## 1.3 Data Presentation

Analytical data are presented in three tabular formats as follows:

Laboratory Report of Analysis - presents analytical results and data qualifiers as reported by the laboratory.

Validation Table - presents results with the appropriate validation qualifiers.

Summary Table - presents validated results which are greater than the Contract Required Detection Limit.

## 1.4 Data Qualifiers

Analytical data qualifiers appear on each table as appropriate and are applied by the laboratory or data reviewer. The descriptions of these qualifiers are as follows:

<u>Organic Data Qualifiers</u>

J - Indicates an estimated concentration because results are either below the contract required detection level (CRQL) or quality control criteria were not met.

JJ - Validation qualifier for concentrations below the CRQL.

U - Indicates that compound was analyzed but not detected.

UJ - Indicates that quantitation level was estimated because QC criteria were not met.

B - Indicates analyte was detected in both the sample and the associated laboratory method blank.

E - Indicates that the analyte concentration exceeded the calibration range of the GC/MS and that a re-analysis of a diluted sample is required.

D - Indicates that sample concentration was obtained by dilution to bring result within calibration range.

R - Indicates that data is unusable because QC criteria were not met.

X - Laboratory-defined qualifier used to provide additional information not covered by the other qualifiers.

Inorganic Data Qualifiers

E - The reported concentration is estimated because of the presence of an interference.

J - Indicates an estimated concentration because QC criteria were not met.

R - Indicates that data is unusable because QC criteria were not met.

M - Duplicate precision criteria were not met.

N - Spiked sample recovery not within control limits.

s - The reported concentration was determined by the method of standard additions.

W - Postdigestion spike for furnace atomic adsorption analysis is outside control limits.

[] - Concentration reported is below CRQL.

* - Duplicate analysis not within control limits.

+ - Correlation coefficient for the method of standard additions was less than 0.995

Other Notations

NR - Analysis not requested.

NA - Analysis requested but not performed.

- - Compound analyzed but not detected.

## 2.0 Data Evaluation

The water and soil analytical data were reviewed and were found to be acceptable. Some minor quality control deficiencies were observed during the validation process, but they do not affect the

overall data quality or utility. The validation findings for each analytical method are discussed in the following subsections.

## 2.0 Volatile Organics - CLP Method

In some cases the initial calibration relative standard deviation (RSD) or continuing calibration percent difference (%D) exceeded the USEPA criteria for dibromochloromethane, bromoform, acetone, methylene chloride, and 2-hexanone. The associated sample results were qualified as estimated.

VOC field duplicate results for three water and three soil samples were acceptable. One soil duplicate (11PS11070201XX) exhibited poor precision for acetone and trichloroethene. The associated results for this sample were qualified as estimated. Also, one soil matrix spike/matrix spike duplicate (MS/MSD) exceeded the precision acceptance limit for ethylbenzene and xylenes. These compounds were qualified as estimated for sample 11PS11020301XX.

Four field blanks, one trip blank, five water method blanks, 12 low level soil method blanks, and one medium level method blank were analyzed in conjunction with this set of samples. The compounds reported include chloroform, methylene chloride, acetone, 2-butanone, 1,1,2,2-tetrachloroethane, 2-hexanone, and trichloroethene. These results did not exceed the USEPA criteria for acceptable blank analyses. A summary of the volatile blank results are presented in Tables 1 and 2.

## 2.1 Volatile Organics - Low Level Method

Selected water samples were analyzed by USEPA Method 524.2 to provide lower detection limits. In one case the %D for the continuing calibration for acetone exceeded the acceptance limit; associated sample results were qualified as estimated.

Two trip blanks, five field blanks, and 6 methods blanks were analyzed using the low level procedure. The compounds detected were methylene chloride, carbon disulfide, toluene, ethyl benzene, styrene, and xylenes. A summary of these results is provided in Tables 1 and 2.

## 2.2 Semivolatile Organics

In some cases the continuing calibration criteria were not met for benzoic acid, 4-nitroaniline, 2,4-dinitrophenol, 4-nitrophenol, dibenzo(a,h)anthracene, benzo(g,h,i)perylene, indeno(1,2,3-c,d)pyrene, bis(2-chloro)isopropylether, and hexachlorocyclopentadiene; associated sample results were qualified as estimated. Also, in some instances benzoic acid did not achieve the minimum response criteria, and the associated non-detected benzoic acid results were rejected. The sample holding times were exceeded for 09PS908X0101XX and 09PS908X0801XX (2 days) and 09PS910X0401XX (21 days). The results for these samples were qualified as estimated.

Three water and four soil field duplicates provided acceptable results. The duplicate results for fluoranthene, benzo(b)fluoranthene, and benzo(k)fluoranthene for sample 11PS11060101XX and fluoranthene, pyrene, benzo(a)anthracene, chrysene, benzo(a)pyrene, benzo(b)fluoranthene, and benzo(k)fluoranthene for sample 09PS904X0101XX did not meet the CLP acceptance criteria. Associated results for these samples were qualified as estimated. Low MS/MSD recoveries were reported for 4-nitrophenol in samples EPMW301XXX02XX and EPMW306XXX02XX; results for this compound were qualified as estimated. The MS/MSD recoveries for pentachlorophenol, pyrene, and 1,4-dichlorobenzene in 11PS11020301XX were less than 10%. Non-detected results for these analytes in this sample were rejected.

Water surrogate recoveries were reviewed and found to be acceptable. Low surrogate recoveries were observed for 11MS11020301XX; positive sample results were estimated and non-detected results were rejected.

Four field blanks, four water method blanks, and 18 soil method blanks were prepared and analyzed. Bis(2-ethylhexyl)phthalate and di-n-butylphthalate were only compounds detected. A summary of the blank results is presented in Tables 3 and 4.

## 2.3 Pesticides/PCBs

Some pesticide/PCBs samples exhibited low surrogate recovery. However, since quality control guidelines for the surrogate specified by the method are advisory only, no action was required. Samples 11MS304X2201XX, 11MS304X2201XD, 11MS304X3401XX, and 11MS304X3801XD were extracted one day past the holding time; all results for these samples were qualified as estimated.

One water and three soil field duplicates provided acceptable results. Four field duplicates exhibited poor precision for various compounds: PESTXX2X0101XX (4,4'-DDT); 11PS11060101XX (Arochlor 1254); 11PS11070201XX (4,4'-DDE); and 09PS904X0101XX (4,4'-DDE and 4,4'-DDT). Associated results for these samples were qualified as estimated.

Four field blanks, five water method blanks, and 15 soil method blanks were prepared and analyzed. No blank contamination was observed for this set of samples.

## 2.4 TAL Inorganics (elements and cyanide)

In some cases the matrix spike results were outside the acceptance range for silver, antimony, copper, mercury, and selenium. Associated sample results were qualified as estimated. Low recoveries were reported in some matrix spikes for thallium, selenium, and lead; associated positive results were qualified as estimated and non-detected results were rejected.

Two water and two soil laboratory duplicates and four water and two soil field duplicates provided acceptable results. Two laboratory duplicates (11PS11020301XX and 11PS11070201XD) exhibited poor precision for lead, and the associated lead results were qualified as estimated. Three field duplicate samples (09PS903X0101XX, 09PS904X0101XX, and 11PS11060101XX) had duplicate results outside the CLP acceptance criteria for lead, chromium, and zinc. Associated results were qualified as estimated.

No method blank contamination was observed above the CRQLs. Of the three field blanks analyzed only one had contamination above the CRQLs (iron at 110 ug/L and lead at 5.7 ug/L).

## 2.5 Miscellaneous Parameters

For the chloride, sulfate, and alkalinity analytical results for the water samples no contamination was observed in the six method blanks and four field blanks analyzed. Also, two field duplicate results were acceptable, while one field duplicate exhibited poor precision for sulfate (EPMW301XXX02XX). Sulfate results for this sample were qualified as estimated.

Several soil samples were analyzed for explosives, cadmium, chromium, mercury, lead, phosphorus, and nitrate/nitrite. No blank contamination was observed. The field duplicate for 12PS12030201XX exhibited poor precision for phosphorus, and the results was qualified as estimated.

Table 1
Volatile Method Blank Summary
Units repoted in ug/L

| | Low Level Water | | CLP Water | |
|---|---|---|---|---|
| Compound | Frequency | Range | Frequency | Range |
| methylene chloride | 5 (83%) | 0.7 - 2 | 2 (40%) | 2J - 4J |

| | Low Level Soil | | Medium Level Soil | |
|---|---|---|---|---|
| Compound | Frequency | Range | Frequency | Range |
| methylene chloride | 12 (100%) | 4J - 16 | 1 (100%) | 300J |
| acetone | 11 (92%) | 10 - 50 | 1 (100%) | 2600 |
| 2-butanone | 4 (33%) | 1J - 4J | - | - |
| 4-methyl-2-pentanone | 2 (17%) | 3J | - | - |
| 2-hexanone | 2 (17%) | 3J - 4J | - | - |
| 1,1,2,2-tetra-chloroethane | 1 (8%) | 1J | - | - |
| trichloro-ethene | - | - | 1 (100%) | 160J |

Table 2
Volatile Field Blank Summary
Units repoted in ug/L (water)

| | Low Level Field Blanks | | Low Level Trip Blanks | |
|---|---|---|---|---|
| Compound | Frequency | Range | Frequency | Range |
| methylene chloride | 3 (60%) | 0.5 - 1 | 2 (100%) | 0.5 - 0.9 |
| toluene | 1 (20%) | 1 | - | - |
| styrene | 1 (20%) | 0.2J | - | - |
| total xylenes | 2 (40%) | 0.7 - 0.9 | - | - |
| ethylbenzene | 1 (20%) | 0.2J | - | - |
| carbon disulfide | - | - | 2 (100%) | 1 |

| | CLP Field Blanks | | CLP Trip Blanks | |
|---|---|---|---|---|
| Compound | Frequency | Range | Frequency | Range |
| chloroform | 4 (100%) | 7 - 10 | - | - |
| methylene chloride | 3 (75%) | 4J - 12 | - | - |

Table 3
Semivolatile Method Blank Summary
Units repoted in ug/L

| | Soil | | Water | |
|---|---|---|---|---|
| Compound | Frequency | Range | Frequency | Range |
| bis(2-ethylhexyl) phthalate | - | - | 1 (25%) | 5J |
| di-n-butyl-phthalate | 1 (6%) | 59J | - | - |

Table 4
Semivolatile Field Blank Summary
Units reported in ug/L (water)

| | Field Blanks - Water | | Field Blanks - Soil | |
|---|---|---|---|---|
| Compound | Frequency | Range | Frequency | Range |
| bis(2-ethylhexyl) phthalate | 1 (25%) | 2J | - | - |

PRIVATE WELL ANALYTICAL DATA

# NAS BRUNSWICK

## PRIVATE WELL SAMPLING PROGRAM

| ADDRESS | WELL NO. |
|---|---|
| BARRETT, DONALD S.<br>BOX 5074 COOMBS ROAD<br>BRUNSWICK, MAINE | OBDWXX1XXX01XX |
| BEAN, DAVID B. & CONSTANCE<br>BOX 5117 COOMBS ROAD<br>BRUNSWICK, MAINE | OBDWXX2XXX010XX |
| BERG, ROBERT P. & CHARLENE J.<br>19 COOMBS ROAD<br>BRUNSWICK, MAINE | OBDWXX3XXX010X |
| BLOXAM, MICHAEL R.<br>5098 COOMBS ROAD<br>BRUNSWICK, MAINE | OBDWXX4XXX01XX |
| BLOXAM, MICHAEL R.<br>DUPLICATE | OBDWXX4XXX01XXD |
| CASSIDY, KENNETH R. & ANNA M.<br>5091 COOMBS ROAD<br>BRUNSWICK, MAINE | 0BDWXX5XX01XX |
| CLAYTON, JOHN E. & ANNE<br>5094 COOMBS ROAD<br>BRUNSWICK, MAINE | OBDWXX6XXX01XX |
| COFFIN, RICHARD A.<br>RT. 5 BOX 5122 COOMBS ROAD<br>BRUNSWICK, MAINE | OBDWXX7XXX01XX **AND**<br>**OBDWX23XXXO1XX** |

| | |
|---|---|
| DEGEN, PHYLLIS<br>BOX 5061 COOMBS ROAD<br>BRUNSWICK, MAINE | OBDWXX8XXX01XX |
| FERGUSON, CHARLES B. & JUDITH<br>RFD 5, BOX 5112<br>BRUNSWICK, MAINE | OBDWXX9XXX02XX |
| HANSCOM, PERCY<br>BOX 5090 COOMBS ROAD<br>BRUNSWICK, MAINE | OBDWX10XXX01XX |
| GOSS, PETER A. & VERONICA L.<br>RFD 5, BOX 5108<br>BRUNSWICK, MAINE | OBDWX11XXX01XX |
| KERNER, JAMES C. & NANCY R.<br>5109 COOMBS ROAD<br>BRUNSWICK, MAINE | OBDWX12XXX01XX |
| NULLE, CHRISTOPHER R. & MARGARET R.<br>5111A COOMBS ROAD<br>BRUNSWICK, MAINE | OBDX13XXX01XX |
| ROSENZWEIG, RAYMOND & MICHAELLANNE<br>18 COOMBS ROAD, BOX 5099<br>BRUNSWICK, MAINE | OBDWX14XXX01XX |
| VACHON, STEPHEN R. & KAREN E. CARTER-VACHON<br>5092 COOMBS ROAD (OLD GURNET ROAD)<br>BRUNSWICK, MAINE | OBDWX15XXX01XX |
| BARRETT, WILLIAM<br>RT. 5, BOX 5070 COOMBS ROAD<br>BRUNSWICK, MAINE | OBDWX16XXX01XX |
| BARRETT, WILLIAM<br>DUPLICATE | OBDWX16XXX01XD |

| | |
|---|---|
| GALLAGHERS, JOHN & LINDA<br>5111 COOMBS ROAD<br>BRUNSWICK, MAINE | OBDWX17XXX01XX |
| WARD, VIRGINIA H.<br>RFD #5, BOX 5089 COOMBS ROAD<br>BRUNSWICK, MAINE | OBDWX18XXX01XX |
| PALMER, RICHARD E.& HELEN L.<br>P. O. BOX 23<br>BRUNSWICK, MAINE | OBDWX19XXX01XX |
| CARSLICK, JAMES A.<br>5073 COOMBS ROAD<br>BRUNSWICK, MAINE | OBDWX20XXX01XX |
| MOORE, DANIEL A. & LISA M.<br>RFD #5, BOX 5095 COOMBS ROAD<br>BRUNSWICK, MAINE | OBDWX21XXX01XX |
| DONOVAN, CORNELIUS P. IV & CATHLEEN | OBDWX22XXX01XX |

PROJECT: Naval Air Station Brunswick

Volatile Aqueous Analysis (ug/L)

06-Dec-90

Table 3
Summary Table

| SAMPLE LOCATION: | | OBDWXX1XXX01XX | OBDWXX2XXX01XX | OBDWXX3XXX01XX | OBDWXX4XXX01XD | OBDWXX4XXX01XX | OBDWXX5XXX01XX | OBDWXX6XXX01XX | OBDWXX7XXX01XX |
|---|---|---|---|---|---|---|---|---|---|
| LAB NUMBER: | | 901016605A | 901007301A | 901007305A | 901007307D | 901007306E | 901007310A | 901007308A | 901016610E |
| DATE SAMPLED: | | 10/10/90 | 10/03/90 | 10/03/90 | 10/03/90 | 10/03/90 | 10/03/90 | 10/03/90 | 10/10/90 |
| DATE ANALYZED: | | 10/17/90 | 10/09/90 | 10/09/90 | 10/09/90 | 10/09/90 | 10/09/90 | 10/09/90 | 10/17/90 |
| ANALYTE | CRQL | | | | | | | | |
| Chloromethane | 1 | - | - | - | - | - | - | - | - |
| Bromomethane | 1 | - | - | - | - | - | - | - | - |
| Vinyl Chloride | 1 | - | - | - | - | - | - | - | - |
| Chloroethane | 1 | - | - | - | - | - | - | - | - |
| Methylene Chloride | 0.5 | - | - | - | - | - | - | - | - |
| Acetone | 1 | - | - | - | - | - | - | - | - |
| Carbon Disulfide | 0.5 | - | - | - | - | - | - | - | - |
| 1,1-Dichloroethene | 0.5 | - | - | - | - | - | - | - | - |
| 1,1-Dichloroethane | 0.5 | - | - | - | - | - | - | - | - |
| 1,2-Dichloroethene (total) | 0.5 | - | - | - | - | - | - | - | - |
| Chloroform | 0.5 | - | - | - | - | - | - | - | - |
| 1,2-Dichloroethane | 0.5 | - | - | - | - | - | - | - | - |
| 2-Butanone | 1 | - | - | - | - | - | - | - | - |
| 1,1,1-Trichloroethane | 0.5 | - | - | - | - | - | - | - | - |
| Carbon Tetrachloride | 0.5 | - | - | - | - | - | - | - | - |
| Vinyl Acetate | 1 | - | - | - | - | - | - | - | - |
| Bromodichloromethane | 0.5 | - | - | - | - | - | - | - | - |
| 1,2-Dichloropropane | 0.5 | - | - | - | - | - | - | - | - |
| cis-1,3-Dichloropropene | 0.5 | - | - | - | - | - | - | - | - |
| Trichloroethene | 0.5 | - | - | - | - | - | - | - | - |
| Dibromochloromethane | 0.5 | - | - | - | - | - | - | - | 0.5 |
| 1,1,2-Trichloroethane | 0.5 | - | - | - | - | - | - | - | - |
| Benzene | 0.5 | - | - | - | - | - | - | - | - |
| trans-1,3-Dichloropropene | 0.5 | - | - | - | - | - | - | - | - |
| Bromoform | 0.5 | - | - | - | - | - | - | - | - |
| 4-Methyl-2-Pentanone | 1 | - | - | - | - | - | - | - | - |
| 2-Hexanone | 1 | - | - | - | - | - | - | - | - |
| Tetrachloroethene | 0.5 | - | - | - | - | - | - | - | - |
| 1,1,2,2-Tetrachloroethane | 0.5 | - | - | - | - | - | - | - | - |
| Toluene | 0.5 | - | - | - | - | - | - | - | - |
| Chlorobenzene | 0.5 | - | - | - | - | - | - | - | - |
| Ethylbenzene | 0.5 | - | - | - | - | - | - | - | - |
| Styrene | 0.5 | - | - | - | - | - | - | - | - |
| Total Xylenes | 0.5 | - | - | - | - | - | - | - | - |
| Dilution Factor: | | 1.0 | 1.0 | 1.0 | 1.0 | 1.0 | 1.0 | 1.0 | 1.0 |
| Associated Method Blank: | | 79584 | 901007318AB | 901007318AB | 901007318AB | 901007318AB | 901007318AB | 901007318AB | 79584 |
| Associated Equipment Blank: | | - | - | - | - | - | - | - | - |
| Associated Field Blank: | | - | - | - | - | - | - | - | - |
| Associated Trip Blank: | | OBQTXX2XXX01XX | OBQTXX1XXX01XX | OBQTXX1XXX01XX | OBQTXX1XXX01XX | OBQTXX1XXX01XX | OBQTXX1XXX01XX | OBQTXX1XXX01XX | OBQTXX2XXX01XX |

PROJECT: Naval Air Station Brunswick

Volatile Aqueous Analysis (ug/L)

06-Dec-90

Table 3
Summary Table

| SAMPLE LOCATION: | OBDWXX8XXX01XX | OBDWXX9XXX01XX | OBDWX10XXX01XX | OBDWX11XXX01XX | OBDWX12XXX01XX | OBDWXX13XXX01XX | OBDWX14XXX01XX | OBDWX15XXX01XX |
|---|---|---|---|---|---|---|---|---|
| LAB NUMBER: | 901007315A | 901007302A | 901007309A | 901007316A | 901007304A | 901016603A | 901007303A | 901016608A |
| DATE SAMPLED: | 10/03/90 | 10/03/90 | 10/03/90 | 10/03/90 | 10/03/90 | 10/10/90 | 10/03/90 | 10/10/90 |
| DATE ANALYZED: | 10/09/90 | 10/09/90 | 10/09/90 | 10/09/90 | 10/09/90 | 10/17/90 | 10/09/90 | 10/17/90 |
| ANALYTE / CRQL | | | | | | | | |
| Chloromethane 1 | - | - | - | - | - | - | - | - |
| Bromomethane 1 | - | - | - | - | - | - | - | - |
| Vinyl Chloride 1 | - | - | - | - | - | - | - | - |
| Chloroethane 1 | - | - | - | - | - | - | - | - |
| Methylene Chloride 0.5 | - | - | - | - | - | - | - | - |
| Acetone 1 | - | - | - | - | - | - | - | - |
| Carbon Disulfide 0.5 | - | - | - | - | - | - | - | - |
| 1,1-Dichloroethene 0.5 | - | - | - | - | - | - | - | - |
| 1,1-Dichloroethane 0.5 | - | - | - | - | - | - | - | - |
| 1,2-Dichloroethene (total) 0.5 | - | - | - | - | - | - | - | - |
| Chloroform 0.5 | - | - | - | - | - | - | - | - |
| 1,2-Dichloroethane 0.5 | - | - | - | - | - | - | - | - |
| 2-Butanone 1 | - | - | - | - | - | - | - | - |
| 1,1,1-Trichloroethane 0.5 | - | - | - | - | - | - | - | - |
| Carbon Tetrachloride 0.5 | - | - | - | - | - | - | - | - |
| Vinyl Acetate 1 | - | - | - | - | - | - | - | - |
| Bromodichloromethane 0.5 | - | - | - | - | - | - | - | - |
| 1,2-Dichloropropane 0.5 | - | - | - | - | - | - | - | - |
| cis-1,3-Dichloropropene 0.5 | - | - | - | - | - | - | - | - |
| Trichloroethene 0.5 | - | - | - | - | - | - | - | - |
| Dibromochloromethane 0.5 | - | - | - | - | - | - | - | - |
| 1,1,2-Trichloroethane 0.5 | - | - | - | - | - | - | - | - |
| Benzene 0.5 | - | - | - | - | - | - | - | - |
| trans-1,3-Dichloropropene 0.5 | - | - | - | - | - | - | - | - |
| Bromoform 0.5 | - | - | - | - | - | - | - | - |
| 4-Methyl-2-Pentanone 1 | - | - | - | - | - | - | - | - |
| 2-Hexanone 1 | - | - | - | - | - | - | - | - |
| Tetrachloroethene 0.5 | - | - | - | - | - | - | - | - |
| 1,1,2,2-Tetrachloroethane 0.5 | - | - | - | - | - | - | - | - |
| Toluene 0.5 | - | - | - | - | - | - | - | - |
| Chlorobenzene 0.5 | - | - | - | - | - | - | - | - |
| Ethylbenzene 0.5 | - | - | - | - | - | - | - | - |
| Styrene 0.5 | - | - | - | - | - | - | - | - |
| Total Xylenes 0.5 | - | - | - | - | - | - | - | - |
| Dilution Factor: | 1.0 | 1.0 | 1.0 | 1.0 | 1.0 | 1.0 | 1.0 | 1.0 |
| Associated Method Blank: | 901007319AB | 901007318AB | 901007318AB | 901007319AB | 901007318AB | 79584 | 901007318AB | 79584 |
| Associated Equipment Blank: | - | - | - | - | - | - | - | - |
| Associated Field Blank: | - | - | - | - | - | - | - | - |
| Associated Trip Blank: | OBQTXX1XXX01XX | OBQTXX1XXX01XX | OBQTXX1XXX01XX | OBQTXX1XXX01XX | OBQTXX1XXX01XX | OBQTXX2XXX01XX | OBQTXX1XXX01XX | OBQTXX2XXX01XX |

PROJECT: Naval Air Station Brunswick

Volatile Aqueous Analysis (ug/L)

06-Dec-90

Table 3
Summary Table

| SAMPLE LOCATION: | | OBDWX16XXX01XD | OBDWX16XXX01XX | OBDWXX17XXX01XX | OBDWXX18XXX01XX | OBDWXX19XXX01XX | OBDWXX20XXX01XX | OBDWXX21XXX01XX | OBDWXX22XXX01XX |
|---|---|---|---|---|---|---|---|---|---|
| LAB NUMBER: | | 901007314D | 901007311E | 901016602A | 901016604A | 901016607A | 901016606A | 901016609A | 901016601A |
| DATE SAMPLED: | | 10/03/90 | 10/03/90 | 10/10/90 | 10/10/90 | 10/10/90 | 10/10/90 | 10/10/90 | 10/10/90 |
| DATE ANALYZED: | | 10/09/90 | 10/09/90 | 10/17/90 | 10/17/90 | 10/17/90 | 10/17/90 | 10/17/90 | 10/17/90 |
| ANALYTE | CRQL | | | | | | | | |
| Chloromethane | 1 | - | - | - | - | - | - | - | - |
| Bromomethane | 1 | - | - | - | - | - | - | - | - |
| Vinyl Chloride | 1 | - | - | - | - | - | - | - | - |
| Chloroethane | 1 | - | - | - | - | - | - | - | - |
| Methylene Chloride | 0.5 | - | - | - | - | - | - | - | - |
| Acetone | 1 | - | - | - | - | - | - | - | - |
| Carbon Disulfide | 0.5 | - | - | - | - | - | - | - | - |
| 1,1-Dichloroethene | 0.5 | - | - | - | - | - | - | - | - |
| 1,1-Dichloroethane | 0.5 | - | - | - | - | - | - | - | - |
| 1,2-Dichloroethene (total) | 0.5 | - | - | - | - | - | - | - | - |
| Chloroform | 0.5 | - | - | - | - | - | - | - | - |
| 1,2-Dichloroethane | 0.5 | - | - | - | - | - | - | - | - |
| 2-Butanone | 1 | - | - | - | - | - | - | - | - |
| 1,1,1-Trichloroethane | 0.5 | - | - | - | - | - | - | - | - |
| Carbon Tetrachloride | 0.5 | - | - | - | - | - | - | - | - |
| Vinyl Acetate | 1 | - | - | - | - | - | - | - | - |
| Bromodichloromethane | 0.5 | - | - | - | - | - | - | - | - |
| 1,2-Dichloropropane | 0.5 | - | - | - | - | - | - | - | - |
| cis-1,3-Dichloropropene | 0.5 | - | - | - | - | - | - | - | - |
| Trichloroethene | 0.5 | - | - | - | - | - | - | - | - |
| Dibromochloromethane | 0.5 | - | - | - | - | - | - | - | - |
| 1,1,2-Trichloroethane | 0.5 | - | - | - | - | - | - | - | - |
| Benzene | 0.5 | - | - | - | - | - | - | - | - |
| trans-1,3-Dichloropropene | 0.5 | - | - | - | - | - | - | - | - |
| Bromoform | 0.5 | - | - | - | - | - | - | - | - |
| 4-Methyl-2-Pentanone | 1 | - | - | - | - | - | - | - | - |
| 2-Hexanone | 1 | - | - | - | - | - | - | - | - |
| Tetrachloroethene | 0.5 | - | - | - | - | - | - | - | - |
| 1,1,2,2-Tetrachloroethane | 0.5 | - | - | - | - | - | - | - | - |
| Toluene | 0.5 | - | - | - | - | - | - | - | - |
| Chlorobenzene | 0.5 | - | - | - | - | - | - | - | - |
| Ethylbenzene | 0.5 | - | - | - | - | - | - | - | - |
| Styrene | 0.5 | - | - | - | - | - | - | - | - |
| Total Xylenes | 0.5 | - | - | - | - | - | - | - | - |
| Dilution Factor: | | 1.0 | 1.0 | 1.0 | 1.0 | 1.0 | 1.0 | 1.0 | 1.0 |
| Associated Method Blank: | | 901007319AB | 901007319AB | 79584 | 79584 | 79584 | 79584 | 79584 | 79584 |
| Associated Equipment Blank: | | - | - | - | - | - | - | - | - |
| Associated Field Blank: | | - | - | - | - | - | - | - | - |
| Associated Trip Blank: | | OBQTXX1XXX01XX | OBQTXX1XXX01XX | OBQTXX2XXX01XX | OBQTXX2XXX01XX | OBQTXX2XXX01XX | OBQTXX2XXX01XX | OBQTXX2XXX01XX | OBQTXX2XXX01XX |

Table 3
Summary Table

| SAMPLE LOCATION: | OBDWX23XXXO1XX | OBDWXX7XXXO2XX |
|---|---|---|
| LAB NUMBER: | 42106 | 42105 |
| DATE SAMPLED: | 01/16/91 | 01/16/91 |
| DATE ANALYZED: | 01/23/91 | 01/23/91 |

| ANALYTE | DL | | |
|---|---|---|---|
| Chloromethane | 1 | - | - |
| Bromomethane | 1 | - | - |
| Vinyl Chloride | 1 | - | - |
| Chloroethane | 1 | - | - |
| Methylene Chloride | 0.5 | - | - |
| Acetone | 1 | - | - |
| Carbon Disulfide | 0.5 | - | - |
| 1,1-Dichloroethene | 0.5 | - | - |
| 1,1-Dichloroethane | 0.5 | - | - |
| 1,2-Dichloroethene (total) | 0.5 | - | - |
| Chloroform | 0.5 | - | - |
| 1,2-Dichloroethane | 0.5 | - | - |
| 2-Butanone | 1 | - | - |
| 1,1,1-Trichloroethane | 0.5 | - | - |
| Carbon Tetrachloride | 0.5 | - | - |
| Vinyl Acetate | 1 | - | - |
| Bromodichloromethane | 0.5 | - | - |
| 1,2-Dichloropropane | 0.5 | - | - |
| cis-1,3-Dichloropropene | 0.5 | - | - |
| Trichloroethene | 0.5 | - | - |
| Dibromochloromethane | 0.5 | - | - |
| 1,1,2-Trichloroethane | 0.5 | - | - |
| Benzene | 0.5 | - | - |
| trans-1,3-Dichloropropene | 0.5 | - | - |
| Bromoform | 0.5 | - | - |
| 4-Methyl-2-Pentanone | 1 | - | - |
| 2-Hexanone | 1 | - | - |
| Tetrachloroethene | 0.5 | - | - |
| 1,1,2,2-Tetrachloroethane | 0.5 | - | - |
| Toluene | 0.5 | - | - |
| Chlorobenzene | 0.5 | - | - |
| Ethylbenzene | 0.5 | - | - |
| Styrene | 0.5 | - | - |
| Total Xylenes | 12 | - | - |
| Dilution Factor: | | 1.0 | 1.0 |

| | | |
|---|---|---|
| Associated Method Blank: | V7539 | V7539 |
| Associated Equipment Blank: | - | - |
| Associated Field Blank: | - | - |
| Associated Trip Blank: | OBQTXX1XXXO2XX | OBQTXX1XXXO2XX |

Box Number: 4607-527

MONITORING WELL DATA

PROJECT: Naval Air Station Brunswick - Round 5 | Volatile Organic Aqueous Analysis (ug/L) | 02/28/91

Table 3
Summary Table

| SAMPLE LOCATION: | 01MW207AXX02XX | 01MW207BXX02XX | 01MW209XXX02XX | 01MW224XXX02XD | 01MW224XXX02XX | 01MW229AXX02XX | 01MW229BXX02XX | 01MW230AXX02XX |
|---|---|---|---|---|---|---|---|---|
| LAB NUMBER: | 901110401A | 901110402A | 901110405A | 901106712D | 901106711E | 901110406A | 901110407A | 901109001A |
| DATE SAMPLED: | 11/09/90 | 11/09/90 | 11/08/90 | 11/07/90 | 11/07/90 | 11/09/90 | 11/09/90 | 11/08/90 |
| DATE ANALYZED: | 11/13/90 | 11/14/90 | 11/14/90 | 11/09/90 | 11/09/90 | 11/13/90 | 11/13/90 | 11/09/90 |
| ANALYTE | CRQL | | | | | | | |
| Chloromethane | 10 | - | - | - | - | - | - | - |
| Bromomethane | 10 | - | - | - | - | - | - | - |
| Vinyl Chloride | 10 | - | - | - | - | - | - | - |
| Chloroethane | 10 | - | - | - | - | - | - | - |
| Methylene Chloride | 5 | - | - | - | - | - | - | - |
| Acetone | 10 | - | - | - | - | - | - | - |
| Carbon Disulfide | 5 | - | - | - | - | - | - | - |
| 1,1-Dichloroethene | 5 | - | - | - | - | - | - | - |
| 1,1-Dichloroethane | 5 | - | - | - | - | - | - | - |
| 1,2-Dichloroethene (total) | 5 | - | - | - | - | - | - | - |
| Chloroform | 5 | - | - | - | - | - | - | - |
| 1,2-Dichloroethane | 5 | - | - | - | - | - | - | - |
| 2-Butanone | 10 | - | - | - | - | - | - | - |
| 1,1,1-Trichloroethane | 5 | - | - | - | 33 | 36 | 110 | - |
| Carbon Tetrachloride | 5 | - | - | - | - | - | - | - |
| Vinyl Acetate | 10 | - | - | - | - | - | - | - |
| Bromodichloromethane | 5 | - | - | - | - | - | - | - |
| 1,2-Dichloropropane | 5 | - | - | - | - | - | - | - |
| cis-1,3-Dichloropropene | 5 | - | - | - | - | - | - | - |
| Trichloroethene | 5 | 6 | - | - | 120 | 130 | 57 | - |
| Dibromochloromethane | 5 | - | - | - | - | - | - | - |
| 1,1,2-Trichloroethane | 5 | - | - | - | - | - | - | - |
| Benzene | 5 | - | - | - | - | - | - | - |
| trans-1,3-Dichloropropene | 5 | - | - | - | - | - | - | - |
| Bromoform | 5 | - | - | - | - | - | - | - |
| 4-Methyl-2-Pentanone | 10 | - | - | - | - | - | - | - |
| 2-Hexanone | 10 | - | - | - | - | - | - | - |
| Tetrachloroethene | 5 | 5 | - | - | 7 | 8 | - | - |
| 1,1,2,2-Tetrachloroethane | 5 | - | - | - | - | - | - | - |
| Toluene | 5 | - | - | - | - | - | - | - |
| Chlorobenzene | 5 | - | - | - | - | - | - | - |
| Ethylbenzene | 5 | - | - | - | - | - | - | - |
| Styrene | 5 | - | - | - | - | - | - | - |
| Total Xylenes | 5 | - | - | - | - | - | - | - |
| Dilution Factor: | | 1.0 | 1.0 | 1.0 | 1.0 | 1.0 | 1.0 | 1.0 |
| Associated Method Blank: | | 79894 | 79908 | 79908 | 79865 | 79865 | 79894 | 79894 | 79865 |
| Associated Equipment Blank: | | BNQSXX4XXX02XX | BNQSXX4XXX02XX | BNQSXX4XXX02XX | BNQSXX2XXX02XX | BNQSXX2XXX02XX | BNQSXX4XXX02XX | BNQSXX4XXX02XX | - |
| Associated Field Blank: | | - | - | - | - | - | - | - | - |
| Associated Trip Blank: | | - | - | - | - | - | - | - | - |

Table 3
Summary Table

| SAMPLE LOCATION: | 01MW230BXX02XX | 01MW234XXX02XX | 09MW906XXX02XX | 11MW1103XX02XX | 13MW1303XX02XX | 13MWGZA3XX02XX |
|---|---|---|---|---|---|---|
| LAB NUMBER: | 901109002A | 901109003A | 901106713A | 901105115A | 901106707A | 901106708A |
| DATE SAMPLED: | 11/08/90 | 11/08/90 | 11/07/90 | 11/06/90 | 11/07/90 | 11/07/90 |
| DATE ANALYZED: | 11/09/90 | 11/13/90 | 11/09/90 | 11/08/90 | 11/09/90 | 11/09/90 |
| ANALYTE | CRQL | | | | | |
| Chloromethane | 10 | - | - | - | - | - | - |
| Bromomethane | 10 | - | - | - | - | - | - |
| Vinyl Chloride | 10 | - | - | 31 | - | - | - |
| Chloroethane | 10 | - | - | - | - | - | - |
| Methylene Chloride | 5 | 8 J | 410 J | - | - | - | - |
| Acetone | 10 | - | - | - | - | - | - |
| Carbon Disulfide | 5 | - | - | - | - | - | - |
| 1,1-Dichloroethene | 5 | - | - | - | 6 | - | - |
| 1,1-Dichloroethane | 5 | - | - | - | 130 | - | - |
| 1,2-Dichloroethene (total) | 5 | - | - | 79 | 680 D | 63 | - |
| Chloroform | 5 | - | - | - | - | - | - |
| 1,2-Dichloroethane | 5 | - | - | - | - | - | - |
| 2-Butanone | 10 | - | - | - | - | - | - |
| 1,1,1-Trichloroethane | 5 | - | - | - | 1200 D | - | - |
| Carbon Tetrachloride | 5 | - | - | - | - | - | - |
| Vinyl Acetate | 10 | - | - | - | - | - | - |
| Bromodichloromethane | 5 | - | - | - | - | - | - |
| 1,2-Dichloropropane | 5 | - | - | - | - | - | - |
| cis-1,3-Dichloropropene | 5 | - | - | - | - | - | - |
| Trichloroethene | 5 | - | - | - | 770 D | - | - |
| Dibromochloromethane | 5 | - | - | - | - | - | - |
| 1,1,2-Trichloroethane | 5 | - | - | - | - | - | - |
| Benzene | 5 | - | - | - | - | - | - |
| trans-1,3-Dichloropropene | 5 | - | - | - | - | - | - |
| Bromoform | 5 | - | - | - | - | - | - |
| 4-Methyl-2-Pentanone | 10 | - | - | - | - | - | - |
| 2-Hexanone | 10 | - | - | - | - | - | - |
| Tetrachloroethene | 5 | - | - | - | 42 | - | - |
| 1,1,2,2-Tetrachloroethane | 5 | - | - | - | - | - | - |
| Toluene | 5 | - | 380 | - | - | - | - |
| Chlorobenzene | 5 | - | - | - | - | - | - |
| Ethylbenzene | 5 | - | 82 | - | - | - | - |
| Styrene | 5 | - | - | - | - | - | - |
| Total Xylenes | 5 | - | 430 | - | - | - | - |
| Dilution Factor: | | 1.0 | 2.5 | 1.0 | 1.0 | 1.0 | 1.0 |
| Associated Method Blank: | | 79865 | 79894 | 79865 | 79850 | 79865 | 79865 |
| Associated Equipment Blank: | | - | - | BNQSXX2XXX02XX | BNQSXX1XXX02XX | BNQSXX2XXX02XX | BNQSXX2XXX02XX |
| Associated Field Blank: | | - | - | - | - | - | - |
| Associated Trip Blank: | | - | - | - | TRIPBLANK | - | - |

Table 3
Summary Table

| SAMPLE LOCATION: | 08MW811XXX02XX | 08MW812XXX05XX | 08MW813XXX05XX | 08MW814XXX05XX |
|---|---|---|---|---|
| LAB NUMBER: | 901111201A | 900825001A | 900825002A | 900825003A |
| DATE SAMPLED: | 11/12/90 | 08/16/90 | 08/16/90 | 08/16/90 |
| DATE ANALYZED: | 11/15/90 | 08/24/90 | 08/24/90 | 08/24/90 |

| ANALYTE | DL | | | | |
|---|---|---|---|---|---|
| Chloromethane | 2 | - | - | - | - |
| Bromomethane | 2 | - | - | - | - |
| Vinyl Chloride | 2 | - | - | - | - |
| Chloroethane | 2 | - | - | - | - |
| Methylene Chloride | 2 | - | - | - | - |
| Acetone | 5 | - | - | - | - |
| Carbon Disulfide | 3 | - | - | - | - |
| 1,1-Dichloroethene | 2 | - | - | - | - |
| 1,1-Dichloroethane | 2 | - | - | - | - |
| 1,2-Dichloroethene (total) | 2 | - | - | - | - |
| Chloroform | 2 | - | 0.6 | - | 0.6 |
| 1,2-Dichloroethane | 2 | - | - | - | - |
| 2-Butanone | 5 | - | - | - | - |
| 1,1,1-Trichloroethane | 2 | - | - | - | - |
| Carbon Tetrachloride | 2 | - | - | 0.7 | - |
| Vinyl Acetate | 5 | - | - | - | - |
| Bromodichloromethane | 2 | - | - | - | - |
| 1,2-Dichloropropane | 2 | - | - | - | - |
| cis-1,3-Dichloropropene | 2 | - | - | - | - |
| Trichloroethene | 2 | - | - | - | - |
| Dibromochloromethane | 2 | - | - | - | - |
| 1,1,2-Trichloroethane | 2 | - | - | - | - |
| Benzene | 2 | - | - | - | - |
| trans-1,3-Dichloropropene | 1 | - | - | - | - |
| Bromoform | 5 | - | - | - | - |
| 4-Methyl-2-Pentanone | 2 | - | - | - | - |
| 2-Hexanone | 5 | - | - | - | - |
| Tetrachloroethene | 2 | - | - | - | - |
| 1,1,2,2-Tetrachloroethane | 2 | - | - | - | - |
| Toluene | 2 | - | - | - | - |
| Chlorobenzene | 2 | - | - | - | - |
| Ethylbenzene | 2 | - | - | - | - |
| Styrene | 1 | - | - | - | - |
| Total Xylenes | 2 | - | - | - | - |
| Dilution Factor: | | 1.0 | 1.0 | 1.0 | 1.0 |
| Associated Method Blank: | | 79924 | 78623 | 78623 | 78623 |
| Associated Equipment Blank: | | - | - | - | - |
| Associated Field Blank: | | - | - | - | - |
| Associated Trip Blank: | | BNQTXX5XXX02XX | 08QTXX1XXX05XX | 08QTXX1XXX05XX | 08QTXX1XXX05XX |

Table 3
Summary Table

| SAMPLE LOCATION: | | 01MW234XXX02XX | | 08MW812XXX05XX | 08MW813XXX05XX | 08MW814XXX05XX |
|---|---|---|---|---|---|---|
| LAB NUMBER: | | 901109201A | | 900825001D | 900825002D | 900825003D |
| DATE SAMPLED: | | 11/08/90 | | 08/16/90 | 08/16/90 | 08/16/90 |
| DATE EXTRACTED: | | 11/12/90 | | 08/21/90 | 08/21/90 | 08/21/90 |
| DATE ANALYZED: | | 11/20/90 | | 08/30/90 | 08/30/90 | 08/30/90 |
| ANALYTE | CRQL | | | | | |
| Phenol | 10 | 170 | D | - | - | - |
| bis(2-Chloroethyl)ether | 10 | - | | - | - | - |
| 2-Chlorophenol | 10 | - | | - | - | - |
| 1,3-Dichlorobenzene | 10 | - | | - | - | - |
| 1,4-Dichlorobenzene | 10 | 27 | | - | - | - |
| Benzyl Alcohol | 10 | - | | - | - | - |
| 1,2-Dichlorobenzene | 10 | - | | - | - | - |
| 2-Methylphenol | 10 | 230 | D | - | - | - |
| bis(2-Chloroisopropyl)ether | 10 | - | | - | - | - |
| 4-Methylphenol | 10 | 140 | | - | - | - |
| N-Nitroso-di-n-propylamine | 10 | - | | - | - | - |
| Hexachloroethane | 10 | - | | - | - | - |
| Nitrobenzene | 10 | - | | - | - | - |
| Isophorone | 10 | - | | - | - | - |
| 2-Nitrophenol | 10 | - | | - | - | - |
| 2,4-Dimethylphenol | 10 | 12 | | - | - | - |
| Benzoic Acid | 50 | 550 | EJ | - | - | - |
| bis(2-Chloroethoxy)methane | 10 | - | | - | - | - |
| 2,4-Dichlorophenol | 10 | - | | - | - | - |
| 1,2,4-Trichlorobenzene | 10 | - | | - | - | - |
| Naphthalene | 10 | 22 | | - | - | - |
| 4-Chloroaniline | 10 | - | | - | - | - |
| Hexachlorobutadiene | 10 | - | | - | - | - |
| 4-Chloro-3-Methylphenol | 10 | - | | - | - | - |
| 2-Methylnaphthalene | 10 | - | | - | - | - |
| Hexachlorocyclopentadiene | 10 | - | | - | - | - |
| 2,4,6-Trichlorophenol | 10 | - | | - | - | - |
| 2,4,5-Trichlorophenol | 50 | - | | - | - | - |
| 2-Chloronaphthalene | 10 | - | | - | - | - |
| 2-Nitroaniline | 50 | - | | - | - | - |
| Dimethylphthalate | 10 | - | | - | - | - |
| Acenaphthylene | 10 | - | | - | - | - |
| 2,6-Dinitrotoluene | 10 | - | | - | - | - |

Table 3
Summary Table

| SAMPLE LOCATION: | | 01MW234XXX02XX | 08MW812XXX05XX | 08MW813XXX05XX | 08MW814XXX05XX |
|---|---|---|---|---|---|
| LAB NUMBER: | | 901109201A | 900825001D | 900825002D | 900825003D |
| DATE SAMPLED: | | 11/08/90 | 08/16/90 | 08/16/90 | 08/16/90 |
| DATE EXTRACTED: | | 11/12/90 | 08/21/90 | 08/21/90 | 08/21/90 |
| DATE ANALYZED: | | 11/20/90 | 08/30/90 | 08/30/90 | 08/30/90 |
| ANALYTE | CRQL | | | | |
| 3-Nitroaniline | 50 | - | - | - | - |
| Acenaphthene | 10 | - | - | - | - |
| 2,4-Dinitrophenol | 50 | - | - | - | - |
| 4-Nitrophenol | 50 | - | - | - | - |
| Dibenzofuran | 10 | - | - | - | - |
| 2,4-Dinitrotoluene | 10 | - | - | - | - |
| Diethylphthalate | 10 | - | - | - | - |
| 4-Chlorophenyl-phenylether | 10 | - | - | - | - |
| Fluorene | 10 | - | - | - | - |
| 4-Nitroaniline | 50 | - | - | - | - |
| 4,6-Dinitro-2-methylphenol | 50 | - | - | - | - |
| N-Nitrosodiphenylamine | 10 | - | - | - | - |
| 4-Bromophenyl-phenylether | 10 | - | - | - | - |
| Hexachlorobenzene | 10 | - | - | - | - |
| Pentachlorophenol | 50 | - | - | - | - |
| Phenanthrene | 10 | - | - | - | - |
| Anthracene | 10 | - | - | - | - |
| Di-n-butylphthalate | 10 | - | - | - | - |
| Fluoranthene | 10 | - | - | - | - |
| Pyrene | 10 | - | - | - | - |
| Butylbenzylphthalate | 10 | - | - | - | - |
| 3,3'-Dichlorobenzidine | 20 | - | - | - | - |
| Benzo(a)Anthracene | 10 | - | - | - | - |
| Chrysene | 10 | - | - | - | - |
| bis(2-Ethylhexyl)phthalate | 10 | - | - | - | - |
| Di-n-octylphthalate | 10 | - | - | - | - |
| Benzo(b)Fluoranthene | 10 | - | - | - | - |
| Benzo(k)Fluoranthene | 10 | - | - | - | - |
| Benzo(a)Pyrene | 10 | - | - | - | - |
| Indeno(1,2,3-c,d)Pyrene | 10 | - | - | - | - |
| Dibenz(a,h)Anthracene | 10 | - | - | - | - |
| Benzo(g,h,i)perylene | 10 | - | - | - | - |
| Dilution Factor: | | 1.0 | 1.0 | 1.0 | 1.0 |
| Associated Method Blank: | | 94526 | 85085 | 85085 | 85085 |
| Associated Equipment Blank: | | BNQSXX2XXX02XX | - | - | - |
| Associated Field Blank: | | - | - | - | - |

Table 3
Summary Table

| | | | | | |
|---|---|---|---|---|---|
| | SAMPLE LOCATION: | 08MW812XXX05XX | 08MW813XXX05XX | 08MW814XXX05XX | 13MW1303XX02XX |
| | LAB NUMBER: | 900825001E | 900825002E | 900825003E | 901106910A |
| | DATE SAMPLED: | 08/16/90 | 08/16/90 | 08/16/90 | 11/07/90 |
| | DATE EXTRACTED: | 08/21/90 | 08/21/90 | 08/21/90 | 11/11/90 |
| | DATE ANALYZED: | 09/19/90 | 09/19/90 | 09/19/90 | 11/16/90 |
| ANALYTE | CRQL | | | | |
| alpha-BHC | 0.05 | - | - | - | - |
| beta-BHC | 0.05 | - | - | - | - |
| delta-BHC | 0.05 | - | - | - | - |
| gamma-BHC (Lindane) | 0.05 | - | - | - | - |
| Heptachlor | 0.05 | - | - | - | - |
| Aldrin | 0.05 | - | - | - | - |
| Heptachlor Epoxide | 0.05 | - | - | - | - |
| Endosulfan I | 0.05 | - | - | - | - |
| Dieldrin | 0.1 | - | - | - | - |
| 4,4'-DDE | 0.1 | - | - | - | - |
| Endrin | 0.1 | - | - | - | - |
| Endosulfan II | 0.1 | - | - | - | - |
| 4,4'-DDD | 0.1 | - | - | - | - |
| Endosulfan Sulfate | 0.1 | - | - | - | - |
| 4,4'-DDT | 0.1 | - | - | - | - |
| Methoxychlor | 0.5 | - | - | - | - |
| Endrin Ketone | 0.1 | - | - | - | - |
| alpha-Chlordane | 0.5 | - | - | - | - |
| gamma-Chlordane | 0.5 | - | - | - | - |
| Toxaphene | 1 | - | - | - | - |
| Aroclor-1016 | 0.5 | - | - | - | - |
| Aroclor-1221 | 0.5 | - | - | - | - |
| Aroclor-1232 | 0.5 | - | - | - | - |
| Aroclor-1242 | 0.5 | - | - | - | - |
| Aroclor-1248 | 0.5 | - | - | - | - |
| Aroclor-1254 | 1 | - | - | - | - |
| Aroclor-1260 | 1 | - | - | - | - |
| Dilution Factor: | | 1.0 | 1.0 | 1.0 | 1.0 |

| | | | | |
|---|---|---|---|---|
| Associated Method Blank: | 900825009AB | 900825009AB | 900825009AB | 901106911AB |
| Associated Equipment Blank: | - | - | - | BNQSXX1XXX02XX |
| Associated Field Blank: | - | - | - | - |

PROJECT: Naval Air Station Brunswick - Round 5 Inorganic Aqueous Analysis (ug/L) 02/28/91

Table 3
Summary Table

| SAMPLE LOCATION: | 01MW207AXX02XX | 01MW207BXX02XX | 01MW209XXX02XX | 01MW211BXX02XX | 01MW224XXX02XD | 01MW224XXX02XX | 01MW229AXX02XX | 01MW229BXX02XX |
|---|---|---|---|---|---|---|---|---|
| LAB NUMBER: | 9011107-01 | 9011107-02 | 9011107-05 | 9011094-04 | 9011070-11 | 9011070-10 | 9011107-06 | 9011107-07 |
| DATE SAMPLED: | 11/09/90 | 11/09/90 | 11/08/90 | 11/08/90 | 11/07/90 | 11/07/90 | 11/09/90 | 11/09/90 |
| ANALYTE | CRQL | | | | | | | |
| Aluminum | 200 | - | - | - | - | - | - | - | - |
| Antimony | 60 | - | - | - | - | - | - | - | - |
| Arsenic | 10 | - | - | - | - | - | - | - | - |
| Barium | 200 | - | - | - | - | - | - | - | - |
| Beryllium | 5 | - | - | - | - | - | - | - | - |
| Cadmium | 5 | - | - | - | - | - | - | - | - |
| Calcium | 5000 | 7150 | - | - | 14600 | 6270 | 6290 | 8160 | 5300 |
| Chromium | 10 | - | - | - | - | - | - | - | - |
| Cobalt | 50 | - | - | - | - | - | - | - | - |
| Copper | 25 | - | - | - | - | - | - | - | - |
| Iron | 100 | 196 | 205 | - | - | - | - | - | 311 |
| Lead | 3 | - | - | 7.7 | - | - | - | 4.6 | - |
| Magnesium | 5000 | - | - | - | 6910 | - | - | - | - |
| Manganese | 15 | 66.2 | 51.3 | - | 61.2 | 52.5 | 53.2 | - | 67.0 |
| Mercury | 0.2 | - | - | - | - | - | - | - | - |
| Nickel | 40 | 76.8 | - | - | - | - | - | - | - |
| Potassium | 5000 | - | - | - | - | - | - | - | - |
| Selenium | 5 | - | - | - | - | - | - | - | - |
| Silver | 10 | - | - | - | - | - | - | - | - |
| Sodium | 5000 | 27500 | 7770 | - | 8020 | 6520 | 6530 | 5790 | 54000 |
| Thallium | 10 | - | - | - | - | - | - | - | - |
| Vanadium | 50 | - | - | - | - | - | - | - | - |
| Zinc | 20 | 132 J | - | - | - | - | - | - | - |
| Cyanide | 10 | - | - | - | - | - | - | - | - |
| Associated Method Blank: | | BR11107W | BR11107W | BR11107W | BN11064W | BNPMW306W | BNPMW306W | BR11107W | BR11107W |
| Associated Equipment Blank: | | BNQSXX4XXX02XX | BNQSXX4XXX02XX | BNQSXX4XXX02XX | BNQSXX3XXX02XX | BNQSXX2XXX02XX | BNQSXX2XXX02XX | BNQSXX4XXX02XX | BNQSXX4XXX02XX |
| Associated Field Blank: | | - | - | - | - | - | - | - | - |

PROJECT: Naval Air Station Brunswick - Round 5 | Inorganic Aqueous Analysis (ug/L) | 02/28/91

Table 3
Summary Table

| SAMPLE LOCATION: | 01MW230AXX02XX | 01MW230BXX02XX | 01MW234XXX02XX | 08MW811XXX02XX | 08MW812XXX05XX | 08MW813XXX05XX | 08MW814XXX05XX | 09MW906XXX02XX |
|---|---|---|---|---|---|---|---|---|
| LAB NUMBER: | 9011094-01 | 9011094-02 | 9011094-03 | 9011113-01 | 9008250-01 | 9008250-02 | 9008250-03 | 9011070-09 |
| DATE SAMPLED: | 11/08/90 | 11/08/90 | 11/08/90 | 11/12/90 | 08/16/90 | 08/16/90 | 08/16/90 | 11/07/90 |
| ANALYTE | CRQL | | | | | | | |
| Aluminum | 200 | - | - | - | - | 344 | - | - | - |
| Antimony | 60 | - | - | - | - | - | - | - | - |
| Arsenic | 10 | - | - | - | - | - | - | - | - |
| Barium | 200 | - | - | - | - | - | - | - | - |
| Beryllium | 5 | - | - | - | - | - | - | - | - |
| Cadmium | 5 | - | - | - | - | - | - | - | - |
| Calcium | 5000 | 5220 | 6480 | 12700 | 59600 | 12300 | 5910 | 6750 | 10700 |
| Chromium | 10 | - | - | - | - | - | - | - | - |
| Cobalt | 50 | - | - | - | - | - | - | - | - |
| Copper | 25 | - | - | - | - | - | - | - | - |
| Iron | 100 | 580 | - | 87300 | 44800 | 393 | 107 | 210 | 115 |
| Lead | 3 | - | - | - | - | - | - | 3.2 | - |
| Magnesium | 5000 | - | - | - | 27600 | - | - | - | - |
| Manganese | 15 | 266 | 159 | 652 | 9100 | 436 | - | 324 | 52.5 |
| Mercury | 0.2 | - | - | - | - | - | - | - | - |
| Nickel | 40 | - | - | - | - | - | - | - | - |
| Potassium | 5000 | - | - | - | 5080 | - | - | - | - |
| Selenium | 5 | - | - | - | - | - | - | - | - |
| Silver | 10 | - | - | - | - | - | - | - | - |
| Sodium | 5000 | - | 21900 | - | 33800 | 29000 | - | 14800 | 35100 |
| Thallium | 10 | - | - | - | - | - | - | - | - |
| Vanadium | 50 | - | - | - | - | - | - | - | - |
| Zinc | 20 | - | - | 31.2 | - | - | - | - | - |
| Cyanide | 10 | - | - | - | - | - | - | - | - |
| Associated Method Blank: | | BN11064W | BN11064W | BN11064W | BNPMW306W | BR9008261 | BR9008261 | BR9008261 | BNPMW306W |
| Associated Equipment Blank: | | BNQSXX3XXX02XX | BNQSXX3XXX02XX | BNQSXX3XXX02XX | - | - | - | - | BNQSXX2XXX02XX |
| Associated Field Blank: | | - | - | - | - | - | - | - | - |

Table 3
Summary Table

| SAMPLE LOCATION: | 11MW1103XX02XX | 13MW1303XX02XX | 13MWGZA3XX02XX |
|---|---|---|---|
| LAB NUMBER: | 9011064-12 | 9011070-13 | 9011070-14 |
| DATE SAMPLED: | 11/06/90 | 11/07/90 | 11/07/90 |

| ANALYTE | CRQL | | | |
|---|---|---|---|---|
| Aluminum | 200 | - | - | - |
| Antimony | 60 | - | - | - |
| Arsenic | 10 | - | - | - |
| Barium | 200 | - | - | - |
| Beryllium | 5 | - | - | - |
| Cadmium | 5 | - | - | - |
| Calcium | 5000 | - | 9200 | 9310 |
| Chromium | 10 | - | - | - |
| Cobalt | 50 | - | - | - |
| Copper | 25 | - | - | - |
| Iron | 100 | 9190 | 208 | - |
| Lead | 3 | - | 5.4 | - |
| Magnesium | 5000 | - | - | - |
| Manganese | 15 | 991 | 2200 | - |
| Mercury | 0.2 | - | - | - |
| Nickel | 40 | - | - | - |
| Potassium | 5000 | - | - | - |
| Selenium | 5 | - | - | - |
| Silver | 10 | - | - | - |
| Sodium | 5000 | - | 15300 | - |
| Thallium | 10 | - | - | - |
| Vanadium | 50 | - | - | - |
| Zinc | 20 | - | - | - |
| Cyanide | 10 | - | - | - |

| | | | |
|---|---|---|---|
| Associated Method Blank: | BN11064W | BNPMW306W | BNPMW306W |
| Associated Equipment Blank: | BNQSXX1XXX02XX | BNQSXX2XXX02XX | BNQSXX2XXX02XX |
| Associated Field Blank: | - | - | - |

Table 3
Summary Table

| SAMPLE LOCATION: | EPMW301XXX02XD | EPMW301XXX02XX | EPMW302XXX02XX | EPMW303XXX02XX | EPMW304XXX02XX | EPMW305XXX02XX | EPMW306XXX02XD | EPMW306XXX02XX |
|---|---|---|---|---|---|---|---|---|
| LAB NUMBER: | 901105103D | 901105102E | 901105106A | 901105107A | 901105108A | 901105109A | 901106702D | 901106701E |
| DATE SAMPLED: | 11/05/90 | 11/05/90 | 11/06/90 | 11/06/90 | 11/06/90 | 11/06/90 | 11/07/90 | 11/07/90 |
| DATE ANALYZED: | 11/07/90 | 11/07/90 | 11/07/90 | 11/07/90 | 11/07/90 | 11/07/90 | 11/08/90 | 11/08/90 |
| ANALYTE | CRQL | | | | | | | |
| Chloromethane | 10 | - | - | - | - | - | - | - |
| Bromomethane | 10 | - | - | - | - | - | - | - |
| Vinyl Chloride | 10 | - | - | - | - | - | - | - |
| Chloroethane | 10 | - | - | - | - | - | - | - |
| Methylene Chloride | 5 | - | - | - | - | - | - | - |
| Acetone | 10 | - | - | - | - | - | - | - |
| Carbon Disulfide | 5 | - | - | - | - | - | - | - |
| 1,1-Dichloroethene | 5 | - | - | - | - | - | 95 | 110 |
| 1,1-Dichloroethane | 5 | - | - | - | - | - | 160 | 170 |
| 1,2-Dichloroethene (total) | 5 | - | - | - | - | - | 93 | 98 |
| Chloroform | 5 | - | - | - | - | - | - | - |
| 1,2-Dichloroethane | 5 | - | - | - | - | - | - | - |
| 2-Butanone | 10 | - | - | - | - | - | - | - |
| 1,1,1-Trichloroethane | 5 | - | - | - | - | 13 | 2300 D | 2300 D |
| Carbon Tetrachloride | 5 | - | - | - | - | - | - | - |
| Vinyl Acetate | 10 | - | - | - | - | - | - | - |
| Bromodichloromethane | 5 | - | - | - | - | - | - | - |
| 1,2-Dichloropropane | 5 | - | - | - | - | - | - | - |
| cis-1,3-Dichloropropene | 5 | - | - | - | - | - | - | - |
| Trichloroethene | 5 | - | - | - | - | 5 | 1200 D | 1200 D |
| Dibromochloromethane | 5 | - | - | - | - | - | - | - |
| 1,1,2-Trichloroethane | 5 | - | - | - | - | - | - | - |
| Benzene | 5 | - | - | - | - | - | - | - |
| trans-1,3-Dichloropropene | 5 | - | - | - | - | - | - | - |
| Bromoform | 5 | - | - | - | - | - | - | - |
| 4-Methyl-2-Pentanone | 10 | - | - | - | - | - | - | - |
| 2-Hexanone | 10 | - | - | - | - | - | - | - |
| Tetrachloroethene | 5 | - | - | - | - | - | 9 | 9 |
| 1,1,2,2-Tetrachloroethane | 5 | - | - | - | - | - | - | - |
| Toluene | 5 | - | - | - | - | - | - | - |
| Chlorobenzene | 5 | - | - | - | - | - | - | - |
| Ethylbenzene | 5 | - | - | - | - | - | - | - |
| Styrene | 5 | - | - | - | - | - | - | - |
| Total Xylenes | 5 | - | - | - | - | - | - | - |
| Dilution Factor: | | 1.0 | 1.0 | 1.0 | 1.0 | 1.0 | 1.0 | 1.0 |
| Associated Method Blank: | | 79834 | 79834 | 79834 | 79834 | 79834 | 79834 | 79850 | 79850 |
| Associated Equipment Blank: | | BNQSXX1XXX02XX | BNQSXX1XXX02XX | BNQSXX1XXX02XX | BNQSXX1XXX02XX | BNQSXX1XXX02XX | BNQSXX1XXX02XX | BNQSXX2XXX02XX | BNQSXX2XXX02XX |
| Associated Field Blank: | | - | - | - | - | - | - | - | - |
| Associated Trip Blank: | | TRIPBLANK | TRIPBLANK | TRIPBLANK | TRIPBLANK | TRIPBLANK | TRIPBLANK | - | - |

Table 3
Summary Table

| SAMPLE LOCATION: | EPMW307XXX02XX | EPMW308XXX02XX | EPMW310XXX02XX | EPMW311XXX02XD | EPMW311XXX02XX | EPMW312XXX02XX | EPMW313XXX02XX | EPMW314AXX02XX |
|---|---|---|---|---|---|---|---|---|
| LAB NUMBER: | 901106705A | 901106706A | 901110408A | 901110410D | 901110409E | 901110411A | 901110412A | 901109004A |
| DATE SAMPLED: | 11/07/90 | 11/07/90 | 11/13/90 | 11/13/90 | 11/13/90 | 11/09/90 | 11/13/90 | 11/08/90 |
| DATE ANALYZED: | 11/08/90 | 11/08/90 | 11/14/90 | 11/14/90 | 11/14/90 | 11/14/90 | 11/14/90 | 11/09/90 |
| ANALYTE | CRQL | | | | | | | |
| Chloromethane | 10 | - | - | - | - | - | - | - |
| Bromomethane | 10 | - | - | - | - | - | - | - |
| Vinyl Chloride | 10 | - | - | - | - | - | - | - |
| Chloroethane | 10 | - | - | - | - | - | - | - |
| Methylene Chloride | 5 | - | - | - | - | - | - | 7 J |
| Acetone | 10 | - | - | - | - | - | - | - |
| Carbon Disulfide | 5 | - | - | - | - | - | - | - |
| 1,1-Dichloroethene | 5 | - | - | - | 60 | 66 | - | - |
| 1,1-Dichloroethane | 5 | - | - | - | 16 | 17 | - | - |
| 1,2-Dichloroethene (total) | 5 | - | - | - | - | - | - | - |
| Chloroform | 5 | - | - | - | - | - | - | - |
| 1,2-Dichloroethane | 5 | - | - | - | - | - | - | - |
| 2-Butanone | 10 | - | - | - | - | - | - | - |
| 1,1,1-Trichloroethane | 5 | - | - | 100 | 660 D | 660 D | - | - |
| Carbon Tetrachloride | 5 | - | - | - | - | - | - | - |
| Vinyl Acetate | 10 | - | - | - | - | - | - | - |
| Bromodichloromethane | 5 | - | - | - | - | - | - | - |
| 1,2-Dichloropropane | 5 | - | - | - | - | - | - | - |
| cis-1,3-Dichloropropene | 5 | - | - | - | - | - | - | - |
| Trichloroethene | 5 | - | - | 30 | 25 | 27 | - | - |
| Dibromochloromethane | 5 | - | - | - | - | - | - | - |
| 1,1,2-Trichloroethane | 5 | - | - | - | - | - | - | - |
| Benzene | 5 | - | - | - | - | - | - | - |
| trans-1,3-Dichloropropene | 5 | - | - | - | - | - | - | - |
| Bromoform | 5 | - | - | - | - | - | - | - |
| 4-Methyl-2-Pentanone | 10 | - | - | - | - | - | - | - |
| 2-Hexanone | 10 | - | - | - | - | - | - | - |
| Tetrachloroethene | 5 | - | - | 6 | 7 | 7 | - | - |
| 1,1,2,2-Tetrachloroethane | 5 | - | - | - | - | - | - | - |
| Toluene | 5 | - | - | - | - | - | - | - |
| Chlorobenzene | 5 | - | - | - | - | - | - | - |
| Ethylbenzene | 5 | - | - | - | - | - | - | - |
| Styrene | 5 | - | - | - | - | - | - | - |
| Total Xylenes | 5 | - | - | - | - | - | - | - |
| Dilution Factor: | | 1.0 | 1.0 | 1.0 | 1.0 | 1.0 | 1.0 | 1.0 |
| Associated Method Blank: | | 79850 | 79850 | 79908 | 79908 | 79908 | 79908 | 79908 | 79865 |
| Associated Equipment Blank: | | BNQSXX2XXX02XX | BNQSXX2XXX02XX | BNQSXX4XXX02XX | BNQSXX4XXX02XX | BNQSXX4XXX02XX | BNQSXX4XXX02XX | BNQSXX4XXX02XX | - |
| Associated Field Blank: | | - | - | - | - | - | - | - | - |
| Associated Trip Blank: | | - | - | - | - | - | - | - | - |

Table 3
Summary Table

| SAMPLE LOCATION: | EPMW314BXX02XX | EPMW315AXX02XX | EPMW315BXX02XX | EPMW318XXX02XX | EPMW319XXX02XX | O6MW320XXX02XX | O6MW321XXX02XX | O6MW322XXX02XX |
|---|---|---|---|---|---|---|---|---|
| LAB NUMBER: | 901109005A | 901109006A | 901109007A | 901109008A | 901110413A | 901105111A | 901105112A | 901105113A |
| DATE SAMPLED: | 11/08/90 | 11/08/90 | 11/08/90 | 11/08/90 | 11/09/90 | 11/06/90 | 11/06/90 | 11/06/90 |
| DATE ANALYZED: | 11/09/90 | 11/09/90 | 11/13/90 | 11/13/90 | 11/14/90 | 11/07/90 | 11/07/90 | 11/07/90 |
| ANALYTE | CRQL | | | | | | | |
| Chloromethane | 10 | - | - | - | - | - | - | - |
| Bromomethane | 10 | - | - | - | - | - | - | - |
| Vinyl Chloride | 10 | - | - | - | - | - | - | - |
| Chloroethane | 10 | - | - | - | - | - | - | - |
| Methylene Chloride | 5 | 7 J | 5 J | - | 9 J | - | - | - |
| Acetone | 10 | - | - | - | - | - | - | - |
| Carbon Disulfide | 5 | - | - | - | - | - | - | - |
| 1,1-Dichloroethene | 5 | - | - | - | - | - | - | - |
| 1,1-Dichloroethane | 5 | - | - | - | - | - | - | - |
| 1,2-Dichloroethene (total) | 5 | - | - | - | - | - | - | - |
| Chloroform | 5 | - | - | - | - | - | - | - |
| 1,2-Dichloroethane | 5 | - | - | - | - | - | - | - |
| 2-Butanone | 10 | - | - | - | - | - | - | - |
| 1,1,1-Trichloroethane | 5 | - | - | - | - | 11 | - | - |
| Carbon Tetrachloride | 5 | - | - | - | - | - | - | - |
| Vinyl Acetate | 10 | - | - | - | - | - | - | - |
| Bromodichloromethane | 5 | - | - | - | - | - | - | - |
| 1,2-Dichloropropane | 5 | - | - | - | - | - | - | - |
| cis-1,3-Dichloropropene | 5 | - | - | - | - | - | - | - |
| Trichloroethene | 5 | - | - | - | - | 6 | - | - |
| Dibromochloromethane | 5 | - | - | - | - | - | - | - |
| 1,1,2-Trichloroethane | 5 | - | - | - | - | - | - | - |
| Benzene | 5 | - | - | - | - | - | - | - |
| trans-1,3-Dichloropropene | 5 | - | - | - | - | - | - | - |
| Bromoform | 5 | - | - | - | - | - | - | - |
| 4-Methyl-2-Pentanone | 10 | - | - | - | - | - | - | - |
| 2-Hexanone | 10 | - | - | - | - | - | - | - |
| Tetrachloroethene | 5 | - | - | - | - | - | - | - |
| 1,1,2,2-Tetrachloroethane | 5 | - | - | - | - | - | - | - |
| Toluene | 5 | - | - | - | - | - | - | - |
| Chlorobenzene | 5 | - | - | - | - | - | - | - |
| Ethylbenzene | 5 | - | - | - | - | - | - | - |
| Styrene | 5 | - | - | - | - | - | - | - |
| Total Xylenes | 5 | - | - | - | - | - | - | - |
| Dilution Factor: | | 1.0 | 1.0 | 1.0 | 1.0 | 1.0 | 1.0 | 1.0 |
| Associated Method Blank: | | 79865 | 79865 | 79894 | 79894 | 79908 | 79834 | 79834 | 79834 |
| Associated Equipment Blank: | | - | - | - | - | BNQSXX4XXX02XX | BNQSXX1XXX02XX | BNQSXX1XXX02XX | BNQSXX1XXX02XX |
| Associated Field Blank: | | - | - | - | - | - | - | - | - |
| Associated Trip Blank: | | - | - | - | - | - | TRIPBLANK | TRIPBLANK | TRIPBLANK |

Table 3
Summary Table

SAMPLE LOCATION: O6MW323XXXO2XX
LAB NUMBER: 901105114A
DATE SAMPLED: 11/06/90
DATE ANALYZED: 11/08/90

| ANALYTE | CRQL | |
|---|---|---|
| Chloromethane | 10 | - |
| Bromomethane | 10 | - |
| Vinyl Chloride | 10 | - |
| Chloroethane | 10 | - |
| Methylene Chloride | 5 | - |
| Acetone | 10 | - |
| Carbon Disulfide | 5 | - |
| 1,1-Dichloroethene | 5 | - |
| 1,1-Dichloroethane | 5 | - |
| 1,2-Dichloroethene (total) | 5 | - |
| Chloroform | 5 | - |
| 1,2-Dichloroethane | 5 | - |
| 2-Butanone | 10 | - |
| 1,1,1-Trichloroethane | 5 | - |
| Carbon Tetrachloride | 5 | - |
| Vinyl Acetate | 10 | - |
| Bromodichloromethane | 5 | - |
| 1,2-Dichloropropane | 5 | - |
| cis-1,3-Dichloropropene | 5 | - |
| Trichloroethene | 5 | - |
| Dibromochloromethane | 5 | - |
| 1,1,2-Trichloroethane | 5 | - |
| Benzene | 5 | - |
| trans-1,3-Dichloropropene | 5 | - |
| Bromoform | 5 | - |
| 4-Methyl-2-Pentanone | 10 | - |
| 2-Hexanone | 10 | - |
| Tetrachloroethene | 5 | - |
| 1,1,2,2-Tetrachloroethane | 5 | - |
| Toluene | 5 | - |
| Chlorobenzene | 5 | - |
| Ethylbenzene | 5 | - |
| Styrene | 5 | - |
| Total Xylenes | 5 | - |
| Dilution Factor: | | 1.0 |

Associated Method Blank: 79850
Associated Equipment Blank: BNQSXX1XXXO2XX
Associated Field Blank: -
Associated Trip Blank: TRIPBLANK

PROJECT: Naval Air Station Brunswick - Round 5 | Volatile Organic Aqueous Analysis (ug/L) | 02/28/91

Table 3
Summary Table

| SAMPLE LOCATION: | EPMW309AXX02XX | EPMW309BXX02XX | EPMW316AXX02XX | EPMW316BXX02XX | EPMW317AXX02XX | EPMW317BXX03XD | EPMW317BXX03XX |
|---|---|---|---|---|---|---|---|
| LAB NUMBER: | 901108002A | 901108003A | 901108904A | 901108905A | 901108903A | 42104 | 42103 |
| DATE SAMPLED: | 11/07/90 | 11/07/90 | 11/08/90 | 11/08/90 | 11/07/90 | 01/16/91 | 01/16/91 |
| DATE ANALYZED: | 11/12/90 | 11/12/90 | 11/12/90 | 11/12/90 | 11/12/90 | 01/23/91 | 01/23/91 |
| ANALYTE / DL | | | | | | | |
| Chloromethane 2 | - | - | - | - | - | - | - |
| Bromomethane 2 | - | - | - | - | - | - | - |
| Vinyl Chloride 2 | - | - | - | - | - | - | - |
| Chloroethane 2 | - | - | - | - | - | - | - |
| Methylene Chloride 2 | - | 0.7 | - | - | - | - | - |
| Acetone 5 | - | - | - | - | - | - | 3 J |
| Carbon Disulfide 3 | - | - | - | - | - | - | - |
| 1,1-Dichloroethene 2 | - | - | - | - | - | - | - |
| 1,1-Dichloroethane 2 | - | - | - | - | - | - | - |
| 1,2-Dichloroethene (total) 2 | - | - | - | - | - | - | - |
| Chloroform 2 | - | - | - | - | - | 5 | 5 |
| 1,2-Dichloroethane 2 | - | - | - | - | - | - | - |
| 2-Butanone 5 | - | - | - | - | - | - | - |
| 1,1,1-Trichloroethane 2 | - | - | - | - | - | - | - |
| Carbon Tetrachloride 2 | - | - | - | - | - | - | - |
| Vinyl Acetate 5 | - | - | - | - | - | - | - |
| Bromodichloromethane 2 | - | - | - | - | 0.8 | 1 X | 1 X |
| 1,2-Dichloropropane 2 | - | - | - | - | - | - | - |
| cis-1,3-Dichloropropene 2 | - | - | - | - | - | - | - |
| Trichloroethene 2 | - | - | - | - | - | - | - |
| Dibromochloromethane 2 | - | - | - | - | - | - | - |
| 1,1,2-Trichloroethane 2 | - | - | - | - | - | - | - |
| Benzene 2 | - | - | - | - | - | - | - |
| trans-1,3-Dichloropropene 1 | - | - | - | - | - | - | - |
| Bromoform 5 | - | - | - | - | - | - | - |
| 4-Methyl-2-Pentanone 2 | - | - | - | - | - | - | - |
| 2-Hexanone 5 | - | - | - | - | - | - | - |
| Tetrachloroethene 2 | - | - | - | - | - | - | - |
| 1,1,2,2-Tetrachloroethane 2 | - | - | - | - | - | - | - |
| Toluene 2 | - | - | 0.6 | - | - | - | - |
| Chlorobenzene 2 | - | - | - | - | - | - | - |
| Ethylbenzene 2 | - | - | - | - | - | - | - |
| Styrene 1 | - | - | - | - | - | - | - |
| Total Xylenes 2 | - | - | - | - | - | - | - |
| Dilution Factor: | 1.0 | 1.0 | 1.0 | 1.0 | 1.0 | 1.0 | 1.0 |
| Associated Method Blank: | 79882 | 79882 | 79882 | 79882 | 79882 | V7539 | V7539 |
| Associated Equipment Blank: | - | - | BNQSXX3XXX02XX | BNQSXX3XXX02XX | BNQSXX3XXX02XX | - | - |
| Associated Field Blank: | - | - | - | - | - | - | - |
| Associated Trip Blank: | BNQTXX2XXX02XX | BNQTXX2XXX02XX | BNQTXX3XXX02XX | BNQTXX3XXX02XX | BNQTXX3XXX02XX | OBQTXX1XXX02XX | OBQTXX1XXX02XX |

X: Mass spectrum does not meet EPA CLP criteria for confirmation, but compound presence is strongly suspected.

Table 3
Summary Table

| SAMPLE LOCATION: | | EPMW301XXX02XD | EPMW301XXX02XX | EPMW302XXX02XX | EPMW303XXX02XX | EPMW304XXX02XX | EPMW305XXX02XX | EPMW306XXX02XD | EPMW306XXX02XX |
|---|---|---|---|---|---|---|---|---|---|
| LAB NUMBER: | | 901105602D | 901105601E | 901105605A | 901105606A | 901105607A | 901105608A | 901106902D | 901106901E |
| DATE SAMPLED: | | 11/05/90 | 11/05/90 | 11/06/90 | 11/06/90 | 11/06/90 | 11/06/90 | 11/07/90 | 11/07/90 |
| DATE EXTRACTED: | | 11/09/90 | 11/09/90 | 11/09/90 | 11/09/90 | 11/09/90 | 11/09/90 | 11/12/90 | 11/12/90 |
| DATE ANALYZED: | | 11/15/90 | 11/15/90 | 11/15/90 | 11/15/90 | 11/15/90 | 11/15/90 | 11/20/90 | 11/20/90 |
| ANALYTE | CRQL | | | | | | | | |
| Phenol | 10 | - | - | - | - | - | - | - | - |
| bis(2-Chloroethyl)ether | 10 | - | - | - | - | - | - | - | - |
| 2-Chlorophenol | 10 | - | - | - | - | - | - | - | - |
| 1,3-Dichlorobenzene | 10 | - | - | - | - | - | - | - | - |
| 1,4-Dichlorobenzene | 10 | - | - | - | - | - | - | - | - |
| Benzyl Alcohol | 10 | - | - | - | - | - | - | - | - |
| 1,2-Dichlorobenzene | 10 | - | - | - | - | - | - | - | - |
| 2-Methylphenol | 10 | - | - | - | - | - | - | - | - |
| bis(2-Chloroisopropyl)ether | 10 | - | - | - | - | - | - | - | - |
| 4-Methylphenol | 10 | - | - | - | - | - | - | - | - |
| N-Nitroso-di-n-propylamine | 10 | - | - | - | - | - | - | - | - |
| Hexachloroethane | 10 | - | - | - | - | - | - | - | - |
| Nitrobenzene | 10 | - | - | - | - | - | - | - | - |
| Isophorone | 10 | - | - | - | - | - | - | - | - |
| 2-Nitrophenol | 10 | - | - | - | - | - | - | - | - |
| 2,4-Dimethylphenol | 10 | - | - | - | - | - | - | - | - |
| Benzoic Acid | 50 | R | R | R | R | R | R | R | R |
| bis(2-Chloroethoxy)methane | 10 | - | - | - | - | - | - | - | - |
| 2,4-Dichlorophenol | 10 | - | - | - | - | - | - | - | - |
| 1,2,4-Trichlorobenzene | 10 | - | - | - | - | - | - | - | - |
| Naphthalene | 10 | - | - | - | - | - | - | - | - |
| 4-Chloroaniline | 10 | - | - | - | - | - | - | - | - |
| Hexachlorobutadiene | 10 | - | - | - | - | - | - | - | - |
| 4-Chloro-3-Methylphenol | 10 | - | - | - | - | - | - | - | - |
| 2-Methylnaphthalene | 10 | - | - | - | - | - | - | - | - |
| Hexachlorocyclopentadiene | 10 | - | - | - | - | - | - | - | - |
| 2,4,6-Trichlorophenol | 10 | - | - | - | - | - | - | - | - |
| 2,4,5-Trichlorophenol | 50 | - | - | - | - | - | - | - | - |
| 2-Chloronaphthalene | 10 | - | - | - | - | - | - | - | - |
| 2-Nitroaniline | 50 | - | - | - | - | - | - | - | - |
| Dimethylphthalate | 10 | - | - | - | - | - | - | - | - |
| Acenaphthylene | 10 | - | - | - | - | - | - | - | - |
| 2,6-Dinitrotoluene | 10 | - | - | - | - | - | - | - | - |

Table 3
Summary Table

| SAMPLE LOCATION: | | EPMW301XXX02XD | EPMW301XXX02XX | EPMW302XXX02XX | EPMW303XXX02XX | EPMW304XXX02XX | EPMW305XXX02XX | EPMW306XXX02XD | EPMW306XXX02XX |
|---|---|---|---|---|---|---|---|---|---|
| LAB NUMBER: | | 901105602D | 901105601E | 901105605A | 901105606A | 901105607A | 901105608A | 901106902D | 901106901E |
| DATE SAMPLED: | | 11/05/90 | 11/05/90 | 11/06/90 | 11/06/90 | 11/06/90 | 11/06/90 | 11/07/90 | 11/07/90 |
| DATE EXTRACTED: | | 11/09/90 | 11/09/90 | 11/09/90 | 11/09/90 | 11/09/90 | 11/09/90 | 11/12/90 | 11/12/90 |
| DATE ANALYZED: | | 11/15/90 | 11/15/90 | 11/15/90 | 11/15/90 | 11/15/90 | 11/15/90 | 11/20/90 | 11/20/90 |
| ANALYTE | CRQL | | | | | | | | |
| 3-Nitroaniline | 50 | - | - | - | - | - | - | - | - |
| Acenaphthene | 10 | - | - | - | - | - | - | - | - |
| 2,4-Dinitrophenol | 50 | - | - | - | - | - | - | - | - |
| 4-Nitrophenol | 50 | - | - | - | - | - | - | - | - |
| Dibenzofuran | 10 | - | - | - | - | - | - | - | - |
| 2,4-Dinitrotoluene | 10 | - | - | - | - | - | - | - | - |
| Diethylphthalate | 10 | - | - | - | - | - | - | - | - |
| 4-Chlorophenyl-phenylether | 10 | - | - | - | - | - | - | - | - |
| Fluorene | 10 | - | - | - | - | - | - | - | - |
| 4-Nitroaniline | 50 | - | - | - | - | - | - | - | - |
| 4,6-Dinitro-2-methylphenol | 50 | - | - | - | - | - | - | - | - |
| N-Nitrosodiphenylamine | 10 | - | - | - | - | - | - | - | - |
| 4-Bromophenyl-phenylether | 10 | - | - | - | - | - | - | - | - |
| Hexachlorobenzene | 10 | - | - | - | - | - | - | - | - |
| Pentachlorophenol | 50 | - | - | - | - | - | - | - | - |
| Phenanthrene | 10 | - | - | - | - | - | - | - | - |
| Anthracene | 10 | - | - | - | - | - | - | - | - |
| Di-n-butylphthalate | 10 | - | - | - | - | - | - | - | - |
| Fluoranthene | 10 | - | - | - | - | - | - | - | - |
| Pyrene | 10 | - | - | - | - | - | - | - | - |
| Butylbenzylphthalate | 10 | - | - | - | - | - | - | - | - |
| 3,3'-Dichlorobenzidine | 20 | - | - | - | - | - | - | - | - |
| Benzo(a)Anthracene | 10 | - | - | - | - | - | - | - | - |
| Chrysene | 10 | - | - | - | - | - | - | - | - |
| bis(2-Ethylhexyl)phthalate | 10 | - | - | 11 | - | 18 | - | - | - |
| Di-n-octylphthalate | 10 | - | - | - | - | - | - | - | - |
| Benzo(b)Fluoranthene | 10 | - | - | - | - | - | - | - | - |
| Benzo(k)Fluoranthene | 10 | - | - | - | - | - | - | - | - |
| Benzo(a)Pyrene | 10 | - | - | - | - | - | - | - | - |
| Indeno(1,2,3-c,d)Pyrene | 10 | - | - | - | - | - | - | - | - |
| Dibenz(a,h)Anthracene | 10 | - | - | - | - | - | - | - | - |
| Benzo(g,h,i)perylene | 10 | - | - | - | - | - | - | - | - |
| Dilution Factor: | | .98 | .97 | .96 | 1.0 | 1.0 | .96 | .96 | .98 |
| Associated Method Blank: | | 94512 | 94512 | 94512 | 94512 | 94512 | 94512 | 94526 | 94526 |
| Associated Equipment Blank: | | BNQSXX1XXX02XX | BNQSXX1XXX02XX | BNQSXX1XXX02XX | BNQSXX1XXX02XX | BNQSXX1XXX02XX | BNQSXX1XXX02XX | BNQSXX2XXX02XX | BNQSXX2XXX02XX |
| Associated Field Blank: | | - | - | - | - | - | - | - | - |

Table 3
Summary Table

| SAMPLE LOCATION: | | EPMW307XXX02XX | EPMW308XXX02XX | EPMW309AXX02XX | EPMW309BXX02XX | EPMW310XXX02XX | EPMW311XXX02XD | EPMW311XXX02XX | EPMW312XXX02XX |
|---|---|---|---|---|---|---|---|---|---|
| LAB NUMBER: | | 901106905A | 901106906A | 901106907A | 901106908A | 901113201A | 901113203D | 901113202E | 901110602A |
| DATE SAMPLED: | | 11/07/90 | 11/07/90 | 11/07/90 | 11/07/90 | 11/13/90 | 11/13/90 | 11/13/90 | 11/09/90 |
| DATE EXTRACTED: | | 11/12/90 | 11/12/90 | 11/12/90 | 11/12/90 | 11/16/90 | 11/16/90 | 11/16/90 | 11/16/90 |
| DATE ANALYZED: | | 11/20/90 | 11/20/90 | 11/20/90 | 11/20/90 | 11/28/90 | 11/28/90 | 11/28/90 | 11/28/90 |
| ANALYTE | CRQL | | | | | | | | |
| Phenol | 10 | - | - | - | - | - | - | - | - |
| bis(2-Chloroethyl)ether | 10 | - | - | - | - | - | - | - | - |
| 2-Chlorophenol | 10 | - | - | - | - | - | - | - | - |
| 1,3-Dichlorobenzene | 10 | - | - | - | - | - | - | - | - |
| 1,4-Dichlorobenzene | 10 | - | - | - | - | - | - | - | - |
| Benzyl Alcohol | 10 | - | - | - | - | - | - | - | - |
| 1,2-Dichlorobenzene | 10 | - | - | - | - | - | - | - | - |
| 2-Methylphenol | 10 | - | - | - | - | - | - | - | - |
| bis(2-Chloroisopropyl)ether | 10 | - | - | - | - | - | - | - | - |
| 4-Methylphenol | 10 | - | - | - | - | - | - | - | - |
| N-Nitroso-di-n-propylamine | 10 | - | - | - | - | - | - | - | - |
| Hexachloroethane | 10 | - | - | - | - | - | - | - | - |
| Nitrobenzene | 10 | - | - | - | - | - | - | - | - |
| Isophorone | 10 | - | - | - | - | - | - | - | - |
| 2-Nitrophenol | 10 | - | - | - | - | - | - | - | - |
| 2,4-Dimethylphenol | 10 | - | - | - | - | - | - | - | - |
| Benzoic Acid | 50 | R | R | R | R | - | - | - | - |
| bis(2-Chloroethoxy)methane | 10 | - | - | - | - | - | - | - | - |
| 2,4-Dichlorophenol | 10 | - | - | - | - | - | - | - | - |
| 1,2,4-Trichlorobenzene | 10 | - | - | - | - | - | - | - | - |
| Naphthalene | 10 | - | - | - | - | - | - | - | - |
| 4-Chloroaniline | 10 | - | - | - | - | - | - | - | - |
| Hexachlorobutadiene | 10 | - | - | - | - | - | - | - | - |
| 4-Chloro-3-Methylphenol | 10 | - | - | - | - | - | - | - | - |
| 2-Methylnaphthalene | 10 | - | - | - | - | - | - | - | - |
| Hexachlorocyclopentadiene | 10 | - | - | - | - | - | - | - | - |
| 2,4,6-Trichlorophenol | 10 | - | - | - | - | - | - | - | - |
| 2,4,5-Trichlorophenol | 50 | - | - | - | - | - | - | - | - |
| 2-Chloronaphthalene | 10 | - | - | - | - | - | - | - | - |
| 2-Nitroaniline | 50 | - | - | - | - | - | - | - | - |
| Dimethylphthalate | 10 | - | - | - | - | - | - | - | - |
| Acenaphthylene | 10 | - | - | - | - | - | - | - | - |
| 2,6-Dinitrotoluene | 10 | - | - | - | - | - | - | - | - |

Table 3
Summary Table

| SAMPLE LOCATION: | | EPMW307XXX02XX | EPMW308XXX02XX | EPMW309AXX02XX | EPMW309BXX02XX | EPMW310XXX02XX | EPMW311XXX02XD | EPMW311XXX02XX | EPMW312XXX02XX |
|---|---|---|---|---|---|---|---|---|---|
| LAB NUMBER: | | 901106905A | 901106906A | 901106907A | 901106908A | 901113201A | 901113203D | 901113202E | 901110602A |
| DATE SAMPLED: | | 11/07/90 | 11/07/90 | 11/07/90 | 11/07/90 | 11/13/90 | 11/13/90 | 11/13/90 | 11/09/90 |
| DATE EXTRACTED: | | 11/12/90 | 11/12/90 | 11/12/90 | 11/12/90 | 11/16/90 | 11/16/90 | 11/16/90 | 11/16/90 |
| DATE ANALYZED: | | 11/20/90 | 11/20/90 | 11/20/90 | 11/20/90 | 11/28/90 | 11/28/90 | 11/28/90 | 11/28/90 |
| ANALYTE | CRQL | | | | | | | | |
| 3-Nitroaniline | 50 | - | - | - | - | - | - | - | - |
| Acenaphthene | 10 | - | - | - | - | - | - | - | - |
| 2,4-Dinitrophenol | 50 | - | - | - | - | - | - | - | - |
| 4-Nitrophenol | 50 | - | - | - | - | - | - | - | - |
| Dibenzofuran | 10 | - | - | - | - | - | - | - | - |
| 2,4-Dinitrotoluene | 10 | - | - | - | - | - | - | - | - |
| Diethylphthalate | 10 | - | - | - | - | - | - | - | - |
| 4-Chlorophenyl-phenylether | 10 | - | - | - | - | - | - | - | - |
| Fluorene | 10 | - | - | - | - | - | - | - | - |
| 4-Nitroaniline | 50 | - | - | - | - | - | - | - | - |
| 4,6-Dinitro-2-methylphenol | 50 | - | - | - | - | - | - | - | - |
| N-Nitrosodiphenylamine | 10 | - | - | - | - | - | - | - | - |
| 4-Bromophenyl-phenylether | 10 | - | - | - | - | - | - | - | - |
| Hexachlorobenzene | 10 | - | - | - | - | - | - | - | - |
| Pentachlorophenol | 50 | - | - | - | - | - | - | - | - |
| Phenanthrene | 10 | - | - | - | - | - | - | - | - |
| Anthracene | 10 | - | - | - | - | - | - | - | - |
| Di-n-butylphthalate | 10 | - | - | - | - | - | - | - | - |
| Fluoranthene | 10 | - | - | - | - | - | - | - | - |
| Pyrene | 10 | - | - | - | - | - | - | - | - |
| Butylbenzylphthalate | 10 | - | - | - | - | - | - | - | - |
| 3,3'-Dichlorobenzidine | 20 | - | - | - | - | - | - | - | - |
| Benzo(a)Anthracene | 10 | - | - | - | - | - | - | - | - |
| Chrysene | 10 | - | - | - | - | - | - | - | - |
| bis(2-Ethylhexyl)phthalate | 10 | - | - | - | - | - | - | - | - |
| Di-n-octylphthalate | 10 | - | - | - | - | - | - | - | - |
| Benzo(b)Fluoranthene | 10 | - | - | - | - | - | - | - | - |
| Benzo(k)Fluoranthene | 10 | - | - | - | - | - | - | - | - |
| Benzo(a)Pyrene | 10 | - | - | - | - | - | - | - | - |
| Indeno(1,2,3-c,d)Pyrene | 10 | - | - | - | - | - | - | - | - |
| Dibenz(a,h)Anthracene | 10 | - | - | - | - | - | - | - | - |
| Benzo(g,h,i)perylene | 10 | - | - | - | - | - | - | - | - |
| Dilution Factor: | | .97 | .97 | 1.0 | .94 | 1.0 | .86 | .95 | 1.0 |
| Associated Method Blank: | | 94526 | 94526 | 94526 | 94526 | 94591 | 94591 | 94591 | 94591 |
| Associated Equipment Blank: | | BNQSXX2XXX02XX | BNQSXX2XXX02XX | BNQSXX2XXX02XX | BNQSXX2XXX02XX | BNQSXX4XXX02XX | BNQSXX4XXX02XX | BNQSXX4XXX02XX | - |
| Associated Field Blank: | | - | - | - | - | - | - | - | - |

PROJECT: Naval Air Station Brunswick - Round 5

Semivolatile Organic Aqueous Analysis (ug/L)

02/28/91

Table 3
Summary Table

| SAMPLE LOCATION: | | EPMW313XXX02XX | EPMW314AXX02XX | EPMW314BXX02XX | EPMW315AXX02XX | EPMW315BXX02XX | EPMW316AXX02XX | EPMW316BXX02XX | EPMW317AXX02XX |
|---|---|---|---|---|---|---|---|---|---|
| LAB NUMBER: | | 901113204A | 901109202A | 901109203A | 901109204A | 901109205A | 901109206A | 901109207A | 901109208A |
| DATE SAMPLED: | | 11/13/90 | 11/08/90 | 11/08/90 | 11/08/90 | 11/08/90 | 11/08/90 | 11/08/90 | 11/07/90 |
| DATE EXTRACTED: | | 11/16/90 | 11/12/90 | 11/12/90 | 11/12/90 | 11/12/90 | 11/12/90 | 11/12/90 | 11/12/90 |
| DATE ANALYZED: | | 11/28/90 | 11/20/90 | 11/20/90 | 11/20/90 | 11/20/90 | 11/20/90 | 11/21/90 | 11/21/90 |
| ANALYTE | CRQL | | | | | | | | |
| Phenol | 10 | - | - | - | - | - | - | - | - |
| bis(2-Chloroethyl)ether | 10 | - | - | - | - | - | - | - | - |
| 2-Chlorophenol | 10 | - | - | - | - | - | - | - | - |
| 1,3-Dichlorobenzene | 10 | - | - | - | - | - | - | - | - |
| 1,4-Dichlorobenzene | 10 | - | - | - | - | - | - | - | - |
| Benzyl Alcohol | 10 | - | - | - | - | - | - | - | - |
| 1,2-Dichlorobenzene | 10 | - | - | - | - | - | - | - | - |
| 2-Methylphenol | 10 | - | - | - | - | - | - | - | - |
| bis(2-Chloroisopropyl)ether | 10 | - | - | - | - | - | - | - | - |
| 4-Methylphenol | 10 | - | - | - | - | - | - | - | - |
| N-Nitroso-di-n-propylamine | 10 | - | - | - | - | - | - | - | - |
| Hexachloroethane | 10 | - | - | - | - | - | - | - | - |
| Nitrobenzene | 10 | - | - | - | - | - | - | - | - |
| Isophorone | 10 | - | - | - | - | - | - | - | - |
| 2-Nitrophenol | 10 | - | - | - | - | - | - | - | - |
| 2,4-Dimethylphenol | 10 | - | - | - | - | - | - | - | - |
| Benzoic Acid | 50 | - | R | R | R | R | R | - | - |
| bis(2-Chloroethoxy)methane | 10 | - | - | - | - | - | - | - | - |
| 2,4-Dichlorophenol | 10 | - | - | - | - | - | - | - | - |
| 1,2,4-Trichlorobenzene | 10 | - | - | - | - | - | - | - | - |
| Naphthalene | 10 | - | - | - | - | - | - | - | - |
| 4-Chloroaniline | 10 | - | - | - | - | - | - | - | - |
| Hexachlorobutadiene | 10 | - | - | - | - | - | - | - | - |
| 4-Chloro-3-Methylphenol | 10 | - | - | - | - | - | - | - | - |
| 2-Methylnaphthalene | 10 | - | - | - | - | - | - | - | - |
| Hexachlorocyclopentadiene | 10 | - | - | - | - | - | - | - | - |
| 2,4,6-Trichlorophenol | 10 | - | - | - | - | - | - | - | - |
| 2,4,5-Trichlorophenol | 50 | - | - | - | - | - | - | - | - |
| 2-Chloronaphthalene | 10 | - | - | - | - | - | - | - | - |
| 2-Nitroaniline | 50 | - | - | - | - | - | - | - | - |
| Dimethylphthalate | 10 | - | - | - | - | - | - | - | - |
| Acenaphthylene | 10 | - | - | - | - | - | - | - | - |
| 2,6-Dinitrotoluene | 10 | - | - | - | - | - | - | - | - |

Table 3
Summary Table

| SAMPLE LOCATION: | EPMW313XXX02XX | EPMW314AXX02XX | EPMW314BXX02XX | EPMW315AXX02XX | EPMW315BXX02XX | EPMW316AXX02XX | EPMW316BXX02XX | EPMW317AXX02XX |
|---|---|---|---|---|---|---|---|---|
| LAB NUMBER: | 901113204A | 901109202A | 901109203A | 901109204A | 901109205A | 901109206A | 901109207A | 901109208A |
| DATE SAMPLED: | 11/13/90 | 11/08/90 | 11/08/90 | 11/08/90 | 11/08/90 | 11/08/90 | 11/08/90 | 11/07/90 |
| DATE EXTRACTED: | 11/16/90 | 11/12/90 | 11/12/90 | 11/12/90 | 11/12/90 | 11/12/90 | 11/12/90 | 11/12/90 |
| DATE ANALYZED: | 11/28/90 | 11/20/90 | 11/20/90 | 11/20/90 | 11/20/90 | 11/20/90 | 11/21/90 | 11/21/90 |
| ANALYTE | CRQL | | | | | | | |
| 3-Nitroaniline | 50 | - | - | - | - | - | - | - |
| Acenaphthene | 10 | - | - | - | - | - | - | - |
| 2,4-Dinitrophenol | 50 | - | - | - | - | - | - | - |
| 4-Nitrophenol | 50 | - | - | - | - | - | - | - |
| Dibenzofuran | 10 | - | - | - | - | - | - | - |
| 2,4-Dinitrotoluene | 10 | - | - | - | - | - | - | - |
| Diethylphthalate | 10 | - | - | - | - | - | - | - |
| 4-Chlorophenyl-phenylether | 10 | - | - | - | - | - | - | - |
| Fluorene | 10 | - | - | - | - | - | - | - |
| 4-Nitroaniline | 50 | - | - | - | - | - | - | - |
| 4,6-Dinitro-2-methylphenol | 50 | - | - | - | - | - | - | - |
| N-Nitrosodiphenylamine | 10 | - | - | - | - | - | - | - |
| 4-Bromophenyl-phenylether | 10 | - | - | - | - | - | - | - |
| Hexachlorobenzene | 10 | - | - | - | - | - | - | - |
| Pentachlorophenol | 50 | - | - | - | - | - | - | - |
| Phenanthrene | 10 | - | - | - | - | - | - | - |
| Anthracene | 10 | - | - | - | - | - | - | - |
| Di-n-butylphthalate | 10 | - | - | - | - | - | - | - |
| Fluoranthene | 10 | - | - | - | - | - | - | - |
| Pyrene | 10 | - | - | - | - | - | - | - |
| Butylbenzylphthalate | 10 | - | - | - | - | - | - | - |
| 3,3'-Dichlorobenzidine | 20 | - | - | - | - | - | - | - |
| Benzo(a)Anthracene | 10 | - | - | - | - | - | - | - |
| Chrysene | 10 | - | - | - | - | - | - | - |
| bis(2-Ethylhexyl)phthalate | 10 | - | 92 | - | - | - | - | - |
| Di-n-octylphthalate | 10 | - | - | - | - | - | - | - |
| Benzo(b)Fluoranthene | 10 | - | - | - | - | - | - | - |
| Benzo(k)Fluoranthene | 10 | - | - | - | - | - | - | - |
| Benzo(a)Pyrene | 10 | - | - | - | - | - | - | - |
| Indeno(1,2,3-c,d)Pyrene | 10 | - | - | - | - | - | - | - |
| Dibenz(a,h)Anthracene | 10 | - | - | - | - | - | - | - |
| Benzo(g,h,i)perylene | 10 | - | - | - | - | - | - | - |
| Dilution Factor: | | .87 | 1.0 | 1.0 | 1.0 | 1.0 | .96 | 1.0 | 1.0 |
| Associated Method Blank: | | 94591 | 94526 | 94526 | 94526 | 94526 | 94526 | 94526 | 94526 |
| Associated Equipment Blank: | | BNQSXX4XXX02XX | BNQSXX3XXX02XX | BNQSXX3XXX02XX | BNQSXX3XXX02XX | BNQSXX3XXX02XX | BNQSXX3XXX02XX | BNQSXX3XXX02XX | BNQSXX3XXX02XX |
| Associated Field Blank: | | - | - | - | - | - | - | - | - |

Table 3
Summary Table

| | | | | | | | | |
|---|---|---|---|---|---|---|---|---|
| | SAMPLE LOCATION: | EPMW317BXX02XX | EPMW318XXX02XX | EPMW319XXX02XX | O6MW320XXX02XX | O6MW321XXX02XX | O6MW322XXX02XX | O6MW323XXX02XX |
| | LAB NUMBER: | 901109209B | 901109210A | 901110603A | 901105609A | 901105610A | 901105611A | 901105612A |
| | DATE SAMPLED: | 11/07/90 | 11/08/90 | 11/09/90 | 11/06/90 | 11/06/90 | 11/06/90 | 11/06/90 |
| | DATE EXTRACTED: | 11/12/90 | 11/12/90 | 11/16/90 | 11/09/90 | 11/09/90 | 11/09/90 | 11/09/90 |
| | DATE ANALYZED: | 11/21/90 | 11/21/90 | 11/28/90 | 11/15/90 | 11/15/90 | 11/15/90 | 11/15/90 |
| ANALYTE | CRQL | | | | | | | |
| Phenol | 10 | - | - | - | - | - | - | - |
| bis(2-Chloroethyl)ether | 10 | - | - | - | - | - | - | - |
| 2-Chlorophenol | 10 | - | - | - | - | - | - | - |
| 1,3-Dichlorobenzene | 10 | - | - | - | - | - | - | - |
| 1,4-Dichlorobenzene | 10 | - | - | - | - | - | - | - |
| Benzyl Alcohol | 10 | - | - | - | - | - | - | - |
| 1,2-Dichlorobenzene | 10 | - | - | - | - | - | - | - |
| 2-Methylphenol | 10 | - | - | - | - | - | - | - |
| bis(2-Chloroisopropyl)ether | 10 | - | - | - | - | - | - | - |
| 4-Methylphenol | 10 | - | - | - | - | - | - | - |
| N-Nitroso-di-n-propylamine | 10 | - | - | - | - | - | - | - |
| Hexachloroethane | 10 | - | - | - | - | - | - | - |
| Nitrobenzene | 10 | - | - | - | - | - | - | - |
| Isophorone | 10 | - | - | - | - | - | - | - |
| 2-Nitrophenol | 10 | - | - | - | - | - | - | - |
| 2,4-Dimethylphenol | 10 | - | - | - | - | - | - | - |
| Benzoic Acid | 50 | - | - | - | R | R | R | R |
| bis(2-Chloroethoxy)methane | 10 | - | - | - | - | - | - | - |
| 2,4-Dichlorophenol | 10 | - | - | - | - | - | - | - |
| 1,2,4-Trichlorobenzene | 10 | - | - | - | - | - | - | - |
| Naphthalene | 10 | - | - | - | - | - | - | - |
| 4-Chloroaniline | 10 | - | - | - | - | - | - | - |
| Hexachlorobutadiene | 10 | - | - | - | - | - | - | - |
| 4-Chloro-3-Methylphenol | 10 | - | - | - | - | - | - | - |
| 2-Methylnaphthalene | 10 | - | - | - | - | - | - | - |
| Hexachlorocyclopentadiene | 10 | - | - | - | - | - | - | - |
| 2,4,6-Trichlorophenol | 10 | - | - | - | - | - | - | - |
| 2,4,5-Trichlorophenol | 50 | - | - | - | - | - | - | - |
| 2-Chloronaphthalene | 10 | - | - | - | - | - | - | - |
| 2-Nitroaniline | 50 | - | - | - | - | - | - | - |
| Dimethylphthalate | 10 | - | - | - | - | - | - | - |
| Acenaphthylene | 10 | - | - | - | - | - | - | - |
| 2,6-Dinitrotoluene | 10 | - | - | - | - | - | - | - |

Table 3
Summary Table

| SAMPLE LOCATION: | | EPMW317BXX02XX | EPMW318XXX02XX | EPMW319XXX02XX | O6MW320XXX02XX | O6MW321XXX02XX | O6MW322XXX02XX | O6MW323XXX02XX |
|---|---|---|---|---|---|---|---|---|
| LAB NUMBER: | | 901109209B | 901109210A | 901110603A | 901105609A | 901105610A | 901105611A | 901105612A |
| DATE SAMPLED: | | 11/07/90 | 11/08/90 | 11/09/90 | 11/06/90 | 11/06/90 | 11/06/90 | 11/06/90 |
| DATE EXTRACTED: | | 11/12/90 | 11/12/90 | 11/16/90 | 11/09/90 | 11/09/90 | 11/09/90 | 11/09/90 |
| DATE ANALYZED: | | 11/21/90 | 11/21/90 | 11/28/90 | 11/15/90 | 11/15/90 | 11/15/90 | 11/15/90 |
| ANALYTE | CRQL | | | | | | | |
| 3-Nitroaniline | 50 | - | - | - | - | - | - | - |
| Acenaphthene | 10 | - | - | - | - | - | - | - |
| 2,4-Dinitrophenol | 50 | - | - | - | - | - | - | - |
| 4-Nitrophenol | 50 | - | - | - | - | - | - | - |
| Dibenzofuran | 10 | - | - | - | - | - | - | - |
| 2,4-Dinitrotoluene | 10 | - | - | - | - | - | - | - |
| Diethylphthalate | 10 | - | - | - | - | - | - | - |
| 4-Chlorophenyl-phenylether | 10 | - | - | - | - | - | - | - |
| Fluorene | 10 | - | - | - | - | - | - | - |
| 4-Nitroaniline | 50 | - | - | - | - | - | - | - |
| 4,6-Dinitro-2-methylphenol | 50 | - | - | - | - | - | - | - |
| N-Nitrosodiphenylamine | 10 | - | - | - | - | - | - | - |
| 4-Bromophenyl-phenylether | 10 | - | - | - | - | - | - | - |
| Hexachlorobenzene | 10 | - | - | - | - | - | - | - |
| Pentachlorophenol | 50 | - | - | - | - | - | - | - |
| Phenanthrene | 10 | - | - | - | - | - | - | - |
| Anthracene | 10 | - | - | - | - | - | - | - |
| Di-n-butylphthalate | 10 | - | - | - | - | - | - | - |
| Fluoranthene | 10 | - | - | - | - | - | - | - |
| Pyrene | 10 | - | - | - | - | - | - | - |
| Butylbenzylphthalate | 10 | - | - | - | - | - | - | - |
| 3,3'-Dichlorobenzidine | 20 | - | - | - | - | - | - | - |
| Benzo(a)Anthracene | 10 | - | - | - | - | - | - | - |
| Chrysene | 10 | - | - | - | - | - | - | - |
| bis(2-Ethylhexyl)phthalate | 10 | - | - | - | 15 | - | - | 26 |
| Di-n-octylphthalate | 10 | - | - | - | - | - | - | - |
| Benzo(b)Fluoranthene | 10 | - | - | - | - | - | - | - |
| Benzo(k)Fluoranthene | 10 | - | - | - | - | - | - | - |
| Benzo(a)Pyrene | 10 | - | - | - | - | - | - | - |
| Indeno(1,2,3-c,d)Pyrene | 10 | - | - | - | - | - | - | - |
| Dibenz(a,h)Anthracene | 10 | - | - | - | - | - | - | - |
| Benzo(g,h,i)perylene | 10 | - | - | - | - | - | - | - |
| Dilution Factor: | | .94 | 1.0 | .96 | .94 | 1.0 | .96 | .98 |
| Associated Method Blank: | | 94526 | 94526 | 94591 | 94512 | 94512 | 94512 | 94512 |
| Associated Equipment Blank: | | BNQSXX3XXX02XX | BNQSXX3XXX02XX | - | BNQSXX1XXX02XX | BNQSXX1XXX02XX | BNQSXX1XXX02XX | BNQSXX1XXX02XX |
| Associated Field Blank: | | - | - | - | - | - | - | - |

Table 3
Summary Table

| SAMPLE LOCATION: | | EPMW301XXX02XD | EPMW301XXX02XX | EPMW302XXX02XX | EPMW303XXX02XX | EPMW304XXX02XX | EPMW305XXX02XX | EPMW306XXX02XD | EPMW306XXX02XX |
|---|---|---|---|---|---|---|---|---|---|
| LAB NUMBER: | | 901105602D | 901105601E | 901105605B | 901105606B | 901105607B | 901105608B | 901106902D | 901106901E |
| DATE SAMPLED: | | 11/05/90 | 11/05/90 | 11/06/90 | 11/06/90 | 11/06/90 | 11/06/90 | 11/07/90 | 11/07/90 |
| DATE EXTRACTED: | | 11/07/90 | 11/07/90 | 11/07/90 | 11/07/90 | 11/07/90 | 11/07/90 | 11/11/90 | 11/11/90 |
| DATE ANALYZED: | | 11/15/90 | 11/15/90 | 11/15/90 | 11/15/90 | 11/15/90 | 11/15/90 | 11/16/90 | 11/16/90 |
| ANALYTE | CRQL | | | | | | | | |
| alpha-BHC | 0.05 | - | - | - | - | - | - | - | - |
| beta-BHC | 0.05 | - | - | - | - | - | - | - | - |
| delta-BHC | 0.05 | - | - | - | - | - | - | - | - |
| gamma-BHC (Lindane) | 0.05 | - | - | - | - | - | - | - | - |
| Heptachlor | 0.05 | - | - | - | - | - | - | - | - |
| Aldrin | 0.05 | - | - | - | - | - | - | - | - |
| Heptachlor Epoxide | 0.05 | - | - | - | - | - | - | - | - |
| Endosulfan I | 0.05 | - | - | - | - | - | - | - | - |
| Dieldrin | 0.1 | - | - | - | - | - | - | - | - |
| 4,4'-DDE | 0.1 | - | - | - | - | - | - | - | - |
| Endrin | 0.1 | - | - | - | - | - | - | - | - |
| Endosulfan II | 0.1 | - | - | - | - | - | - | - | - |
| 4,4'-DDD | 0.1 | - | - | - | - | - | - | - | - |
| Endosulfan Sulfate | 0.1 | - | - | - | - | - | - | - | - |
| 4,4'-DDT | 0.1 | - | - | - | - | - | - | - | - |
| Methoxychlor | 0.5 | - | - | - | - | - | - | - | - |
| Endrin Ketone | 0.1 | - | - | - | - | - | - | - | - |
| alpha-Chlordane | 0.5 | - | - | - | - | - | - | - | - |
| gamma-Chlordane | 0.5 | - | - | - | - | - | - | - | - |
| Toxaphene | 1 | - | - | - | - | - | - | - | - |
| Aroclor-1016 | 0.5 | - | - | - | - | - | - | - | - |
| Aroclor-1221 | 0.5 | - | - | - | - | - | - | - | - |
| Aroclor-1232 | 0.5 | - | - | - | - | - | - | - | - |
| Aroclor-1242 | 0.5 | - | - | - | - | - | - | - | - |
| Aroclor-1248 | 0.5 | - | - | - | - | - | - | - | - |
| Aroclor-1254 | 1 | - | - | - | - | - | - | - | - |
| Aroclor-1260 | 1 | - | - | - | - | - | - | - | - |
| Dilution Factor: | | 1.0 | 1.0 | 1.0 | 1.0 | 1.0 | 1.0 | 1.0 | 1.0 |
| Associated Method Blank: | | 901105615AB | 901105615AB | 901105615AB | 901105615AB | 901105615AB | 901105615AB | 901105615AB | 901105615AB |
| Associated Equipment Blank: | | BNQSXX1XXX02XX | BNQSXX1XXX02XX | BNQSXX1XXX02XX | BNQSXX1XXX02XX | BNQSXX1XXX02XX | BNQSXX1XXX02XX | BNQSXX2XXX02XX | BNQSXX2XXX02XX |
| Associated Field Blank: | | - | - | - | - | - | - | - | - |

Table 3
Summary Table

| | | | | | | | | | |
|---|---|---|---|---|---|---|---|---|---|
| | SAMPLE LOCATION: | EPMW307XXX02XX | EPMW308XXX02XX | EPMW309AXX02XX | EPMW309BXX02XX | EPMW310XXX02XX | EPMW311XXX02XD | EPMW311XXX02XX | EPMW312XXX02XX |
| | LAB NUMBER: | 901106905B | 901106906B | 901106907B | 901106908B | 901113201B | 901113203D | 901113202E | 901110602B |
| | DATE SAMPLED: | 11/07/90 | 11/07/90 | 11/07/90 | 11/07/90 | 11/13/90 | 11/13/90 | 11/13/90 | 11/09/90 |
| | DATE EXTRACTED: | 11/11/90 | 11/07/90 | 11/11/90 | 11/11/90 | 11/18/90 | 11/18/90 | 11/18/90 | 11/13/90 |
| | DATE ANALYZED: | 11/16/90 | 11/15/90 | 11/16/90 | 11/16/90 | 11/29/90 | 11/28/90 | 11/28/90 | 11/30/90 |
| ANALYTE | CRQL | | | | | | | | |
| alpha-BHC | 0.05 | - | - | - | - | - | - | - | - |
| beta-BHC | 0.05 | - | - | - | - | - | - | - | - |
| delta-BHC | 0.05 | - | - | - | - | - | - | - | - |
| gamma-BHC (Lindane) | 0.05 | - | - | - | - | - | - | - | - |
| Heptachlor | 0.05 | - | - | - | - | - | - | - | - |
| Aldrin | 0.05 | - | - | - | - | - | - | - | - |
| Heptachlor Epoxide | 0.05 | - | - | - | - | - | - | - | - |
| Endosulfan I | 0.05 | - | - | - | - | - | - | - | - |
| Dieldrin | 0.1 | - | - | - | - | - | - | - | - |
| 4,4'-DDE | 0.1 | - | - | - | - | - | - | - | - |
| Endrin | 0.1 | - | - | - | - | - | - | - | - |
| Endosulfan II | 0.1 | - | - | - | - | - | - | - | - |
| 4,4'-DDD | 0.1 | - | - | - | - | - | - | - | - |
| Endosulfan Sulfate | 0.1 | - | - | - | - | - | - | - | - |
| 4,4'-DDT | 0.1 | - | - | - | - | - | - | - | - |
| Methoxychlor | 0.5 | - | - | - | - | - | - | - | - |
| Endrin Ketone | 0.1 | - | - | - | - | - | - | - | - |
| alpha-Chlordane | 0.5 | - | - | - | - | - | - | - | - |
| gamma-Chlordane | 0.5 | - | - | - | - | - | - | - | - |
| Toxaphene | 1 | - | - | - | - | - | - | - | - |
| Aroclor-1016 | 0.5 | - | - | - | - | - | - | - | - |
| Aroclor-1221 | 0.5 | - | - | - | - | - | - | - | - |
| Aroclor-1232 | 0.5 | - | - | - | - | - | - | - | - |
| Aroclor-1242 | 0.5 | - | - | - | - | - | - | - | - |
| Aroclor-1248 | 0.5 | - | - | - | - | - | - | - | - |
| Aroclor-1254 | 1 | - | - | - | - | - | - | - | - |
| Aroclor-1260 | 1 | - | - | - | - | - | - | - | - |
| Dilution Factor: | | 1.0 | 1.0 | 1.0 | 1.0 | 1.0 | 1.0 | 1.0 | 1.0 |
| Associated Method Blank: | | 901105615AB | 901105615AB | 901105615AB | 901105615AB | 901113208AB | 901113208AB | 901113208AB | 901105615AB |
| Associated Equipment Blank: | | BNQSXX2XXX02XX | BNQSXX2XXX02XX | BNQSXX2XXX02XX | BNQSXX2XXX02XX | BNQSXX4XXX02XX | BNQSXX4XXX02XX | BNQSXX4XXX02XX | - |
| Associated Field Blank: | | - | - | - | - | - | - | - | - |

Table 3
Summary Table

| SAMPLE LOCATION: | | EPMW313XXX02XX | EPMW314AXX02XX | EPMW314BXX02XX | EPMW315AXX02XX | EPMW315BXX02XX | EPMW316AXX02XX | EPMW316BXX02XX | EPMW317AXX02XX |
|---|---|---|---|---|---|---|---|---|---|
| LAB NUMBER: | | 901113204B | 901109202ER | 901109203B | 901109204B | 901109205B | 901109206B | 901109207B | 901109208B |
| DATE SAMPLED: | | 11/13/90 | 11/08/90 | 11/08/90 | 11/08/90 | 11/08/90 | 11/08/90 | 11/08/90 | 11/07/90 |
| DATE EXTRACTED: | | 11/18/90 | 11/11/90 | 11/11/90 | 11/11/90 | 11/11/90 | 11/11/90 | 11/11/90 | 11/11/90 |
| DATE ANALYZED: | | 11/29/90 | 11/16/90 | 11/16/90 | 11/16/90 | 11/16/90 | 11/16/90 | 11/16/90 | 11/16/90 |
| ANALYTE | CRQL | | | | | | | | |
| alpha-BHC | 0.05 | - | - | - | - | - | - | - | - |
| beta-BHC | 0.05 | - | - | - | - | - | - | - | - |
| delta-BHC | 0.05 | - | - | - | - | - | - | - | - |
| gamma-BHC (Lindane) | 0.05 | - | - | - | - | - | - | - | - |
| Heptachlor | 0.05 | - | - | - | - | - | - | - | - |
| Aldrin | 0.05 | - | - | - | - | - | - | - | - |
| Heptachlor Epoxide | 0.05 | - | - | - | - | - | - | - | - |
| Endosulfan I | 0.05 | - | - | - | - | - | - | - | - |
| Dieldrin | 0.1 | - | - | - | - | - | - | - | - |
| 4,4'-DDE | 0.1 | - | - | - | - | - | - | - | - |
| Endrin | 0.1 | - | - | - | - | - | - | - | - |
| Endosulfan II | 0.1 | - | - | - | - | - | - | - | - |
| 4,4'-DDD | 0.1 | - | - | - | - | - | - | - | - |
| Endosulfan Sulfate | 0.1 | - | - | - | - | 0.22 | - | - | - |
| 4,4'-DDT | 0.1 | - | - | - | - | - | - | - | - |
| Methoxychlor | 0.5 | - | - | - | - | - | - | - | - |
| Endrin Ketone | 0.1 | - | - | - | - | - | - | - | - |
| alpha-Chlordane | 0.5 | - | - | - | - | - | - | - | - |
| gamma-Chlordane | 0.5 | - | - | - | - | - | - | - | - |
| Toxaphene | 1 | - | - | - | - | - | - | - | - |
| Aroclor-1016 | 0.5 | - | - | - | - | - | - | - | - |
| Aroclor-1221 | 0.5 | - | - | - | - | - | - | - | - |
| Aroclor-1232 | 0.5 | - | - | - | - | - | - | - | - |
| Aroclor-1242 | 0.5 | - | - | - | - | - | - | - | - |
| Aroclor-1248 | 0.5 | - | - | - | - | - | - | - | - |
| Aroclor-1254 | 1 | - | - | - | - | - | - | - | - |
| Aroclor-1260 | 1 | - | - | - | - | - | - | - | - |
| Dilution Factor: | | 1.0 | 1.0 | 1.0 | 1.0 | 1.0 | 1.0 | 1.0 | 1.0 |
| Associated Method Blank: | | 901113208AB | 901106911AB | 901105615AB | 901106911AB | 901106911AB | 901106911AB | 901106911AB | 901106911AB |
| Associated Equipment Blank: | | BNQSXX4XXX02XX | BNQSXX3XXX02XX | BNQSXX3XXX02XX | BNQSXX3XXX02XX | BNQSXX3XXX02XX | BNQSXX3XXX02XX | BNQSXX3XXX02XX | BNQSXX3XXX02XX |
| Associated Field Blank: | | - | - | - | - | - | - | - | - |

Table 3
Summary Table

| | | | | | | | | |
|---|---|---|---|---|---|---|---|---|
| | SAMPLE LOCATION: | EPMW317BXX02XX | EPMW318XXX02XX | EPMW319XXX02XX | O6MW320XXX02XX | O6MW321XXX02XX | O6MW322XXX02XX | O6MW323XXX02XX |
| | LAB NUMBER: | 901109209B | 901109210B | 901113205A | 901105609B | 901105610B | 901105611B | 901105612B |
| | DATE SAMPLED: | 11/07/90 | 11/08/90 | 11/09/90 | 11/06/90 | 11/06/90 | 11/06/90 | 11/06/90 |
| | DATE EXTRACTED: | 11/11/90 | 11/11/90 | 11/18/90 | 11/07/90 | 11/07/90 | 11/07/90 | 11/07/90 |
| | DATE ANALYZED: | 11/16/90 | 11/16/90 | 11/29/90 | 11/15/90 | 11/15/90 | 11/15/90 | 11/16/90 |
| ANALYTE | CRQL | | | | | | | |
| alpha-BHC | 0.05 | - | - | - | - | - | - | - |
| beta-BHC | 0.05 | - | - | - | - | - | - | - |
| delta-BHC | 0.05 | - | - | - | - | - | - | - |
| gamma-BHC (Lindane) | 0.05 | - | - | - | - | - | - | - |
| Heptachlor | 0.05 | - | - | - | - | - | - | - |
| Aldrin | 0.05 | - | - | - | - | - | - | - |
| Heptachlor Epoxide | 0.05 | - | - | - | - | - | - | - |
| Endosulfan I | 0.05 | - | - | - | - | - | - | - |
| Dieldrin | 0.1 | - | - | - | - | - | - | - |
| 4,4'-DDE | 0.1 | - | - | - | - | - | - | - |
| Endrin | 0.1 | - | - | - | - | - | - | - |
| Endosulfan II | 0.1 | - | - | - | - | - | - | - |
| 4,4'-DDD | 0.1 | - | - | - | - | - | - | - |
| Endosulfan Sulfate | 0.1 | - | 0.25 | - | - | - | - | - |
| 4,4'-DDT | 0.1 | - | - | - | - | - | - | - |
| Methoxychlor | 0.5 | - | - | - | - | - | - | - |
| Endrin Ketone | 0.1 | - | - | - | - | - | - | - |
| alpha-Chlordane | 0.5 | - | - | - | - | - | - | - |
| gamma-Chlordane | 0.5 | - | - | - | - | - | - | - |
| Toxaphene | 1 | - | - | - | - | - | - | - |
| Aroclor-1016 | 0.5 | - | - | - | - | - | - | - |
| Aroclor-1221 | 0.5 | - | - | - | - | - | - | - |
| Aroclor-1232 | 0.5 | - | - | - | - | - | - | - |
| Aroclor-1242 | 0.5 | - | - | - | - | - | - | - |
| Aroclor-1248 | 0.5 | - | - | - | - | - | - | - |
| Aroclor-1254 | 1 | - | - | - | - | - | - | - |
| Aroclor-1260 | 1 | - | - | - | - | - | - | - |
| Dilution Factor: | | 1.0 | 1.0 | 1.0 | 1.0 | 1.0 | 1.0 | 1.0 |
| Associated Method Blank: | | 901106911AB | 901106911AB | 901113208AB | 901105615AB | 901105615AB | 901105615AB | 901105615AB |
| Associated Equipment Blank: | | BNQSXX3XXX02XX | BNQSXX3XXX02XX | BNQSXX4XXX02XX | BNQSXX1XXX02XX | BNQSXX1XXX02XX | BNQSXX1XXX02XX | BNQSXX1XXX02XX |
| Associated Field Blank: | | - | - | - | - | - | - | - |

Table 3
Summary Table

| SAMPLE LOCATION: | | EPMW301XXX02XD | EPMW301XXX02XX | EPMW302XXX02XX | EPMW303XXX02XX | EPMW304XXX02XX | EPMW305XXX02XX | EPMW306XXX02XD | EPMW306XXX02XX |
|---|---|---|---|---|---|---|---|---|---|
| LAB NUMBER: | | 9011064-02 | 9011064-01 | 9011064-05 | 9011064-06 | 9011064-07 | 9011064-08 | 9011070-02 | 9011070-01 |
| DATE SAMPLED: | | 11/05/90 | 11/05/90 | 11/06/90 | 11/06/90 | 11/06/90 | 11/06/90 | 11/07/90 | 11/07/90 |
| ANALYTE | CRQL | | | | | | | | |
| Aluminum | 200 | - | - | - | - | - | 941 | - | - |
| Antimony | 60 | - | - | - | - | - | - | - | - |
| Arsenic | 10 | - | - | - | 19.2 | - | - | - | - |
| Barium | 200 | - | - | - | - | - | - | - | - |
| Beryllium | 5 | - | - | - | - | - | - | - | - |
| Cadmium | 5 | - | - | - | - | - | - | - | - |
| Calcium | 5000 | - | - | - | 9120 | - | - | 5260 | 5330 |
| Chromium | 10 | - | - | - | - | - | - | - | - |
| Cobalt | 50 | - | - | - | - | - | - | - | - |
| Copper | 25 | - | - | - | - | - | - | - | - |
| Iron | 100 | - | - | - | 711 | - | 1120 | - | - |
| Lead | 3 | - | - | - | - | - | - | - | - |
| Magnesium | 5000 | - | - | - | - | - | - | - | - |
| Manganese | 15 | 57.7 | 61.1 | 181 | 138 | 308 | 25.8 | 27.1 | 27.1 |
| Mercury | 0.2 | - | - | - | - | - | - | - | - |
| Nickel | 40 | - | - | - | - | - | - | - | - |
| Potassium | 5000 | - | - | - | - | - | - | - | - |
| Selenium | 5 | - | - | - | - | - | - | - | - |
| Silver | 10 | - | - | - | - | - | - | - | - |
| Sodium | 5000 | - | - | 9920 | 26600 | - | 40900 | 8540 | 8690 |
| Thallium | 10 | - | - | - | - | - | - | - | - |
| Vanadium | 50 | - | - | - | - | - | - | - | - |
| Zinc | 20 | - | - | - | - | - | - | - | - |
| Cyanide | 10 | - | - | - | - | - | - | - | - |
| Associated Method Blank: | | BN11064W | BN11064W | BN11064W | BN11064W | BN11064W | BN11064W | BNPMW306W | BNPMW306W |
| Associated Equipment Blank: | | BNQSXX1XXX02XX | BNQSXX1XXX02XX | BNQSXX1XXX02XX | BNQSXX1XXX02XX | BNQSXX1XXX02XX | BNQSXX1XXX02XX | BNQSXX2XXX02XX | BNQSXX2XXX02XX |
| Associated Field Blank: | | - | - | - | - | - | - | - | - |

PROJECT: Naval Air Station Brunswick - Round 5 | Inorganic Aqueous Analysis (ug/L) | 02/28/91

Table 3
Summary Table

| SAMPLE LOCATION: | EPMW307XXX02XX | EPMW308XXX02XX | EPMW309AXX02XX | EPMW309BXX02XX | EPMW310XXX02XX | EPMW311XXX02XD | EPMW311XXX02XX | EPMW312XXX02XX |
|---|---|---|---|---|---|---|---|---|
| LAB NUMBER: | 9011070-05 | 9011070-06 | 9011070-07 | 9011070-08 | 9011107-08 | 9011107-10 | 9011107-09 | 9011107-11 |
| DATE SAMPLED: | 11/07/90 | 11/07/90 | 11/07/90 | 11/07/90 | 11/13/90 | 11/13/90 | 11/13/90 | 11/09/90 |
| ANALYTE / CRQL | | | | | | | | |
| Aluminum 200 | - | - | - | - | - | - | - | - |
| Antimony 60 | - | - | - | - | - | - | - | - |
| Arsenic 10 | - | 20.5 | - | - | - | - | - | - |
| Barium 200 | - | - | - | - | - | - | - | - |
| Beryllium 5 | - | - | - | - | - | - | - | - |
| Cadmium 5 | - | - | - | - | - | - | - | - |
| Calcium 5000 | 10300 | - | - | - | 7730 | 12100 | 12100 | 12200 |
| Chromium 10 | - | - | - | - | - | - | - | - |
| Cobalt 50 | - | - | - | - | - | - | - | - |
| Copper 25 | - | - | - | - | - | - | - | - |
| Iron 100 | - | 190 | - | - | - | 482 | 388 | 195 |
| Lead 3 | - | - | - | - | - | 5.1 | 3.9 | 3.3 |
| Magnesium 5000 | - | - | - | - | - | 5160 | 5190 | - |
| Manganese 15 | 87.4 | - | 28.2 | - | - | 195 | 196 | 42.6 |
| Mercury 0.2 | - | - | - | - | - | - | - | - |
| Nickel 40 | - | - | - | - | - | - | - | - |
| Potassium 5000 | - | - | - | - | - | - | - | - |
| Selenium 5 | - | - | - | - | - | - | - | - |
| Silver 10 | - | - | - | - | - | - | - | - |
| Sodium 5000 | 6570 | 101000 | 56400 | 53200 | 5390 | 7410 | 7340 | 52500 |
| Thallium 10 | - | - | - | - | - | - | - | - |
| Vanadium 50 | - | - | - | - | - | - | - | - |
| Zinc 20 | - | - | - | - | - | - | - | - |
| Cyanide 10 | - | - | - | - | - | - | - | - |
| Associated Method Blank: | BNPMW306W | BNPMW306W | BNPMW306W | BNPMW306W | BR11107W | BR11107W | BR11107W | BR11107W |
| Associated Equipment Blank: | BNQSXX2XXX02XX | BNQSXX2XXX02XX | BNQSXX2XXX02XX | BNQSXX2XXX02XX | BNQSXX4XXX02XX | BNQSXX4XXX02XX | BNQSXX4XXX02XX | BNQSXX4XXX02XX |
| Associated Field Blank: | - | - | - | - | - | - | - | - |

Table 3
Summary Table

| SAMPLE LOCATION: | | EPMW313XXX02XX | EPMW314AXX02XX | EPMW314BXX02XX | EPMW315AXX02XX | EPMW315BXX02XX | EPMW316AXX02XX | EPMW316BXX02XX | EPMW317AXX02XX |
|---|---|---|---|---|---|---|---|---|---|
| LAB NUMBER: | | 9011107-12 | 9011094-05 | 9011094-06 | 9011094-07 | 9011094-08 | 9011094-09 | 9011094-10 | 9011094-11 |
| DATE SAMPLED: | | 11/13/90 | 11/08/90 | 11/08/90 | 11/08/90 | 11/08/90 | 11/08/90 | 11/08/90 | 11/07/90 |
| ANALYTE | CRQL | | | | | | | | |
| Aluminum | 200 | 849 | - | - | 865 | - | - | - | - |
| Antimony | 60 | - | - | - | - | - | - | - | - |
| Arsenic | 10 | 11.2 | - | - | - | - | - | - | - |
| Barium | 200 | - | - | - | - | - | - | - | - |
| Beryllium | 5 | - | - | - | - | - | - | - | - |
| Cadmium | 5 | - | - | - | - | - | - | - | - |
| Calcium | 5000 | - | - | - | 6140 | 7220 | 19300 | 9280 | 22400 |
| Chromium | 10 | - | - | - | - | - | - | - | - |
| Cobalt | 50 | - | - | - | - | - | - | - | - |
| Copper | 25 | - | - | - | - | - | - | - | - |
| Iron | 100 | 1220 | - | - | 1210 | - | 149 | - | - |
| Lead | 3 | 4.2 | - | - | - | - | - | - | - |
| Magnesium | 5000 | 6130 | - | - | - | - | - | - | - |
| Manganese | 15 | 262 | - | 235 | 202 | 141 | 50.4 | 65.9 | 29.5 |
| Mercury | 0.2 | - | - | - | - | - | - | - | - |
| Nickel | 40 | - | - | - | - | - | - | - | - |
| Potassium | 5000 | - | - | - | - | - | - | - | - |
| Selenium | 5 | - | - | - | - | - | - | - | - |
| Silver | 10 | - | - | - | - | - | - | - | - |
| Sodium | 5000 | 32700 | 21400 | 12100 | 15900 | - | 18700 | 5340 | 26700 |
| Thallium | 10 | - | - | - | - | - | - | - | - |
| Vanadium | 50 | - | - | - | - | - | - | - | - |
| Zinc | 20 | - | - | - | - | - | - | - | - |
| Cyanide | 10 | - | - | - | - | - | - | - | - |
| Associated Method Blank: | | BR11107W | BN11064W | BN11064W | BN11064W | BN11064W | BNPMW306W | BNPMW306W | BNPMW306W |
| Associated Equipment Blank: | | BNQSXX4XXX02XX | BNQSXX3XXX02XX | BNQSXX3XXX02XX | BNQSXX3XXX02XX | BNQSXX3XXX02XX | BNQSXX3XXX02XX | BNQSXX3XXX02XX | BNQSXX3XXX02XX |
| Associated Field Blank: | | - | - | - | - | - | - | - | - |

Table 3
Summary Table

| SAMPLE LOCATION: | | EPMW317BXX02XX | EPMW318XXX02XX | EPMW319XXX02XX | O6MW320XXX02XX | O6MW321XXX02XX | O6MW322XXX02XX | O6MW323XXX02XX |
|---|---|---|---|---|---|---|---|---|
| LAB NUMBER: | | 9011094-12 | 9011094-13 | 9011107-13 | 9011064-09 | 9011064-10 | 9011064-11 | 9011064-13 |
| DATE SAMPLED: | | 11/07/90 | 11/08/90 | 11/09/90 | 11/06/90 | 11/06/90 | 11/06/90 | 11/06/90 |
| ANALYTE | CRQL | | | | | | | |
| Aluminum | 200 | - | - | - | - | - | - | - |
| Antimony | 60 | - | - | - | - | - | - | - |
| Arsenic | 10 | - | - | - | - | - | - | - |
| Barium | 200 | - | - | - | - | - | - | - |
| Beryllium | 5 | - | - | - | - | - | - | - |
| Cadmium | 5 | - | - | - | - | - | - | - |
| Calcium | 5000 | 8840 | 5030 | 8160 | 5360 | - | 6060 | 10000 |
| Chromium | 10 | - | - | - | - | - | - | - |
| Cobalt | 50 | - | - | - | - | - | - | - |
| Copper | 25 | 28.6 | - | - | - | - | - | - |
| Iron | 100 | 175 | 300 | 111 | - | - | - | - |
| Lead | 3 | - | - | 3.2 | - | - | - | - |
| Magnesium | 5000 | - | - | - | - | - | - | - |
| Manganese | 15 | 22.2 | 231 | 84.5 | 144 | 120 | - | 51.4 |
| Mercury | 0.2 | - | - | - | - | - | - | - |
| Nickel | 40 | - | - | - | - | - | - | - |
| Potassium | 5000 | - | - | - | - | - | - | - |
| Selenium | 5 | - | - | - | - | - | - | - |
| Silver | 10 | - | - | - | - | - | - | - |
| Sodium | 5000 | 43800 | - | 6560 | - | - | 13300 | 27800 |
| Thallium | 10 | - | - | - | - | - | - | - |
| Vanadium | 50 | - | - | - | - | - | - | - |
| Zinc | 20 | - | - | - | - | - | - | - |
| Cyanide | 10 | - | - | - | - | - | - | - |
| Associated Method Blank: | | BNPMW306W | BNPMW306W | BR11107W | BN11064W | BN11064W | BN11064W | BN11064W |
| Associated Equipment Blank: | | BNQSXX3XXX02XX | BNQSXX3XXX02XX | BNQSXX4XXX02XX | BNQSXX1XXX02XX | BNQSXX1XXX02XX | BNQSXX1XXX02XX | BNQSXX1XXX02XX |
| Associated Field Blank: | | - | - | - | - | - | - | - |

Table 3
Summary Table
(Method Blank Evaluation)

| | | | | | | | |
|---|---|---|---|---|---|---|---|
| | SAMPLE LOCATION: | 01MW207AXX02XX | 01MW207BXX02XX | 01MW229AXX02XX | 01MW229BXX02XX | EPMW313XXX02XX | EPMW319XXX02XX |
| | LAB NUMBER: | 01A | 02A | 05A | 06A | 07A | 08A |
| | DATE SAMPLED: | 11/13/90 | 11/13/90 | 11/13/90 | 11/13/90 | 11/13/90 | 11/13/90 |
| | DATE ANALYZED: | 11/26/90 | 11/26/90 | 11/26/90 | 11/26/90 | 11/26/90 | 11/26/90 |
| ANALYTE | DL | | | | | | |
| Bicarbonate | 1.0 | 71 | 14 | 32 | 12 | 80 | 25 |
| Carbonate | 1.0 | - | - | - | - | - | - |
| Total Alkalinity | 1.0 | 71 | 14 | 32 | 12 | 80 | 25 |
| Dilution Factor: | | 1.00 | 1.00 | 1.00 | 1.00 | 1.00 | 1.00 |
| Associated Method Blank: | | BN10A-ALK | BN10A-ALK | BN10A-ALK | BN10A-ALK | BN10A-ALK | BN10A-ALK |
| Associated Equipment Blank: | | BNQSXX4XXX02XX | BNQSXX4XXX02XX | BNQSXX4XXX02XX | BNQSXX4XXX02XX | BNQSXX4XXX02XX | BNQSXX4XXX02XX |

Table 3
Summary Table
(Method Blank Evaluation)

| SAMPLE LOCATION: | | 01MW209XXX02XX | EPMW310XXX02XX | EPMW311XXX02XX | EPMW311XXX02XD | EPMW312XXX02XX |
|---|---|---|---|---|---|---|
| LAB NUMBER: | | 01A | 02A | 03A | 04A | 05A |
| DATE SAMPLED: | | 11/08/90 | 11/08/90 | 11/09/90 | 11/09/90 | 11/09/90 |
| DATE ANALYZED: | | 11/20/90 | 11/20/90 | 11/20/90 | 11/20/90 | 11/20/90 |
| ANALYTE | DL | | | | | |
| Bicarbonate | 1.0 | 7.6 | 19 | 50 | 50 | 92 |
| Carbonate | 1.0 | - | - | - | - | - |
| Total Alkalinity | 1.0 | 7.6 | 19 | 50 | 50 | 92 |
| Dilution Factor: | | 1 | 1 | 1 | 1 | 1 |
| Associated Method Blank: | | BN06A-ALK | BN06A-ALK | BN06A-ALK | BN06A-ALK | BN06A-ALK |

Table 3
Summary Table
(Method Blank Evaluation)

| SAMPLE LOCATION: | | 01MW230AXX02XX | 01MW230BXX02XX | 01MW234XXX02XX | EPMW314AXX02XX | EPMW314BXX02XX | EPMW315AXX02XX | EPMW315BXX02XX | EPMW316AXX02XX |
|---|---|---|---|---|---|---|---|---|---|
| LAB NUMBER: | | 01A | 02A | 03A | 04A | 05A | 06A | 07A | 08A |
| DATE SAMPLED: | | 11/08/90 | 11/08/90 | 11/08/90 | 11/08/90 | 11/08/90 | 11/08/90 | 11/08/90 | 11/08/90 |
| DATE ANALYZED: | | 11/20/90 | 11/20/90 | 11/20/90 | 11/20/90 | 11/20/90 | 11/20/90 | 11/20/90 | 11/20/90 |
| ANALYTE | DL | | | | | | | | |
| Bicarbonate | 1.0 | 28 | 53 | 150 | 43 | 70 | 52 | 26 | 86 |
| Carbonate | 1.0 | - | - | - | - | - | - | - | - |
| Total Alkalinity | 1.0 | 28 | 53 | 150 | 43 | 70 | 52 | 26 | 86 |
| Dilution Factor: | | 1 | 1 | 1 | 1 | 1 | 1 | 1 | 1 |
| Associated Method Blank: | | BN14A-ALK | BN14A-ALK | BN14A-ALK | BN14A-ALK | BN14A-ALK | BN14A-ALK | BN14A-ALK | BN14A-ALK |
| Associated Equipment Blank: | | BNQSXX3XXX02XX | BNQSXX3XXX02XX | BNQSXX3XXX02XX | BNQSXX3XXX02XX | BNQSXX3XXX02XX | BNQSXX3XXX02XX | BNQSXX3XXX02XX | BNQSXX3XXX02XX |

Table 3
Summary Table
(Method Blank Evaluation)

| | | | | | |
|---|---|---|---|---|---|
| | SAMPLE LOCATION: | EPMW316BXX02XX | EPMW317AXX02XX | EPMW317BXX02XX | EPMW318XXX02XX |
| | LAB NUMBER: | 09A | 10A | 11A | 12A |
| | DATE SAMPLED: | 11/08/90 | 11/07/90 | 11/07/90 | 11/08/90 |
| | DATE ANALYZED: | 11/20/90 | 11/20/90 | 11/20/90 | 11/20/90 |
| ANALYTE | DL | | | | |
| Bicarbonate | 1.0 | 33 | 93 | 97 | 23 |
| Carbonate | 1.0 | - | - | - | - |
| Total Alkalinity | 1.0 | 33 | 93 | 97 | 23 |
| | Dilution Factor: | 1 | 1 | 1 | 1 |
| | Associated Method Blank: | BN14A-ALK | BN14A-ALK | BN14A-ALK | BN14A-ALK |
| | Associated Equipment Blank: | BNQSXX3XXX02XX | BNQSXX3XXX02XX | BNQSXX3XXX02XX | BNQSXX3XXX02XX |

Table 3
Summary Table
(Method Blank Evaluation)

| | | | | | | | | | |
|---|---|---|---|---|---|---|---|---|---|
| | SAMPLE LOCATION: | 13MW1303XX02XX | EPMW306XXX02XX | EPMW306XX02XD | 13MWGZA3XX02XX | EPMW307XXX02XX | EPMW308XXX02XX | EPMW309AXX02XX | EPMW309BXX02XX |
| | LAB NUMBER: | 01A | 02A | 03A | 06A | 07A | 08A | 09A | 10A |
| | DATE SAMPLED: | 11/07/90 | 11/07/90 | 11/07/90 | 11/07/90 | 11/07/90 | 11/07/90 | 11/07/90 | 11/07/90 |
| ANALYTE | DL | | | | | | | | |
| Bicarbonate | 1.0 | 34 | 18 | 18 | 7.7 | 23 | 130 | 110 | 100 |
| Carbonate | 1.0 | - | - | - | - | - | - | - | - |
| Total Alkalinity | 1.0 | 34 | 18 | 18 | 7.7 | 23 | 130 | 110 | 100 |
| Dilution Factor: | | 1.00 | 1.00 | 1.00 | 1.00 | 1.00 | 1.00 | 1.00 | 1.00 |
| Associated Method Blank: | | BN17A-ALK | BN17A-ALK | BN17A-ALK | BN17A-ALK | BN17A-ALK | BN17A-ALK | BN17A-ALK | BN17A-ALK |
| Associated Equipment Blank: | | BNQSXX2XXX02XX | BNQSXX2XXX02XX | BNQSXX2XXX02XX | BNQSXX2XXX02XX | BNQSXX2XXX02XX | BNQSXX2XXX02XX | BNQSXX2XXX02XX | BNQSXX2XXX02XX |

Table 1
Laboratory Report of Analysis

SAMPLE LOCATION: BNQSXX1XXXO2XX
LAB NUMBER: 14A
DATE SAMPLED: 11/06/90
DATE ANALYZED: 11/13/90

| ANALYTE | DL | |
|---|---|---|
| Bicarbonate | 1.0 | 1.0 U |
| Carbonate | 1.0 | 1.0 U |
| Total Alkalinity | 1.0 | 1.0 U |

Dilution Factor: 1.00

Associated Method Blank: BN15A-ALK

Table 3
Summary Table
(Method Blank Evaluation)

| | | | | |
|---|---|---|---|---|
| | SAMPLE LOCATION: | 06MW322XXX02XX | 06MW323XXX02XX | 11MW1103XX02XX |
| | LAB NUMBER: | 11A | 12A | 13A |
| | DATE SAMPLED: | 11/06/90 | 11/06/90 | 11/06/90 |
| | DATE ANALYZED: | 11/13/90 | 11/13/90 | 11/13/90 |
| ANALYTE | DL | | | |
| Bicarbonate | 1.0 | 22 | 77 | 20 |
| Carbonate | 1.0 | - | - | - |
| Total Alkalinity | 1.0 | 22 | 77 | 20 |
| | Dilution Factor: | 1.00 | 1.00 | 1.00 |
| | Associated Method Blank: | BN15A-ALK | BN15A-ALK | BN15A-ALK |
| | Associated Equipment Blank: | BNQSXX1XXX02XX | BNQSXX1XXX02XX | BNQSXX1XXX02XX |

L-57

Table 3
Summary Table
(Method Blank Evaluation)

| SAMPLE LOCATION: | | EPMW301XXX02XX | EPMW301XXX02XD | EPMW302XXX02XX | EPMW303XXX02XX | EPMW304XXX02XX | EPMW305XXX02XX | 06MW320XXX02XX | 06MW321XXX02XX |
|---|---|---|---|---|---|---|---|---|---|
| LAB NUMBER: | | 01A | 02A | 05A | 06A | 07A | 08A | 09A | 10A |
| DATE SAMPLED: | | 11/05/90 | 11/05/90 | 11/06/90 | 11/06/90 | 11/06/90 | 11/06/90 | 11/06/90 | 11/06/90 |
| DATE ANALYZED: | | 11/13/90 | 11/13/90 | 11/13/90 | 11/13/90 | 11/13/90 | 11/13/90 | 11/13/90 | 11/13/90 |
| ANALYTE | DL | | | | | | | | |
| Bicarbonate | 1.0 | 8.2 | 7.0 | 32 | 100 | 17 | 92 | 20 | 11 |
| Carbonate | 1.0 | - | - | - | - | - | - | - | - |
| Total Alkalinity | 1.0 | 8.2 | 7.0 | 32 | 100 | 17 | 92 | 20 | 11 |
| Dilution Factor: | | 1.00 | 1.00 | 1.00 | 1.00 | 1.00 | 1.00 | 1.00 | 1.00 |
| Associated Method Blank: | | BN15A-ALK | BN15A-ALK | BN15A-ALK | BN15A-ALK | BN15A-ALK | BN15A-ALK | BN15A-ALK | BN15A-ALK |
| Associated Equipment Blank: | | BNQSXX1XXX02XX | BNQSXX1XXX02XX | BNQSXX1XXX02XX | BNQSXX1XXX02XX | BNQSXX1XXX02XX | BNQSXX1XXX02XX | BNQSXX1XXX02XX | BNQSXX1XXX02XX |

Table 3
Summary Table
(Method Blank Evaluation)

SAMPLE LOCATION: 08MW811XXX02XX
LAB NUMBER: 01A
DATE SAMPLED: 11/12/90
DATE ANALYZED: 11/20/90

| ANALYTE | DL | |
|---|---|---|
| Bicarbonate | 1.0 | 280 |
| Carbonate | 1.0 | - |
| Total Alkalinity | 1.0 | 280 |

Dilution Factor: 1

Associated Method Blank: BN02A-ALK

Table 3
Summary Table
(Method Blank Evaluation)

| | | | | | | |
|---|---|---|---|---|---|---|
| | SAMPLE LOCATION: | 09MW904XXX02XX | 09MW906XXX02XX | 09MW907XXX02XX | 01MW224XXX02XX | 01MW224XXX02XD |
| | LAB NUMBER: | 11A | 12A | 13A | 14A | 15A |
| | DATE SAMPLED: | 11/07/90 | 11/07/90 | 11/07/90 | 11/07/90 | 11/07/90 |
| ANALYTE | DL | | | | | |
| Bicarbonate | 1.0 | 43 | 74 | 100 | 8.7 | 8.3 |
| Carbonate | 1.0 | - | - | - | - | - |
| Total Alkalinity | 1.0 | 43 | 74 | 100 | 8.7 | 8.3 |
| | Dilution Factor: | 1.00 | 1.00 | 1.00 | 1.00 | 1.00 |
| | Associated Method Blank: | BN17A-ALK | BN17A-ALK | BN17A-ALK | BN17A-ALK | BN17A-ALK |
| | Associated Equipment Blank: | BNQSXX2XXX02XX | BNQSXX2XXX02XX | BNQSXX2XXX02XX | BNQSXX2XXX02XX | BNQSXX2XXX02XX |

Table 3
Summary Table
(Method Blank Evaluation)

| SAMPLE LOCATION: | | 01MW207AXX02XX | 01MW207BXX02XX | 01MW229AXX02XX | 01MW229BXX02XX | EPMW313XXX02XX | EPMW319XXX02XX |
|---|---|---|---|---|---|---|---|
| LAB NUMBER: | | 01 | 02 | 05 | 06 | 07 | 08 |
| DATE SAMPLED: | | 11/13/90 | 11/13/90 | 11/13/90 | 11/13/90 | 11/13/90 | 11/13/90 |
| ANALYTE | DL | | | | | | |
| Chloride | 1.0 | 17 | 3.1 | 8.9 | 8.7 | 21 | 12 |
| Sulfate | 1.0 | 1.4 | 5.9 | 4.3 | 3.5 | 5.1 | 4.0 |
| Associated Method Blank: | | BN10-CLS04 | BN10-CLS04 | BN10-CLS04 | BN10-CLS04 | BN10-CLS04 | BN10-CLS04 |
| Associated Equipment Blank: | | BNQSXX4XXX02XX | BNQSXX4XXX02XX | BNQSXX4XXX02XX | BNQSXX4XXX02XX | BNQSXX4XXX02XX | BNQSXX4XXX02XX |

Table 3
Summary Table
(Method Blank Evaluation)

| SAMPLE LOCATION: | | 01MW230AXX02XX | 01MW230BXX02XX | 01MW234XXX02XX | EPMW314AXX02XX | EPMW314BXX02XX | EPMW315AXX02XX | EPMW315BXX02XX | EPMW316AXX02XX |
|---|---|---|---|---|---|---|---|---|---|
| LAB NUMBER: | | 01 | 02 | 03 | 04 | 05 | 06 | 07 | 08 |
| DATE SAMPLED: | | 11/08/90 | 11/08/90 | 11/08/90 | 11/08/90 | 11/08/90 | 11/08/90 | 11/08/90 | 11/08/90 |
| ANALYTE | DL | | | | | | | | |
| Chloride | 1.0 | 8.3 | 6.4 | 8.5 | 16 | 5.2 | 14 | 5.6 | 6.2 |
| Sulfate | 1.0 | 4.0 | - | - | 2.7 | - | - | 5.1 | 9.6 |
| Associated Method Blank: | | BN14-CLS04 | BN14-CLS04 | BN14-CLS04 | BN14-CLS04 | BN14-CLS04 | BN14-CLS04 | BN14-CLS04 | BN14-CLS04 |
| Associated Equipment Blank: | | BNQSXX3XXX02XX | BNQSXX3XXX02XX | BNQSXX3XXX02XX | BNQSXX3XXX02XX | BNQSXX3XXX02XX | BNQSXX3XXX02XX | BNQSXX3XXX02XX | BNQSXX3XXX02XX |

Table 3
Summary Table
(Method Blank Evaluation)

| | | | | | | |
|---|---|---|---|---|---|---|
| | SAMPLE LOCATION: | 09MW904XXX02XX | 09MW906XXX02XX | 09MW907XXX02XX | 01MW224XXX02XX | 01MW224XXX02XD |
| | LAB NUMBER: | 11 | 12 | 13 | 14 | 15 |
| | DATE SAMPLED: | 11/07/90 | 11/07/90 | 11/07/90 | 11/07/90 | 11/07/90 |
| ANALYTE | DL | | | | | |
| Chloride | 1.0 | 7.3 | 29 | 24 | 10 | 9.8 |
| Sulfate | 1.0 | 4.9 | 8.8 | 6.2 | 9.1 | 9.1 |
| Associated Method Blank: | | BN17-CLS04 | BN17-CLS04 | BN17-CLS04 | BN17-CLS04 | BN17-CLS04 |
| Associated Equipment Blank: | | BNQSXX2XXX02XX | BNQSXX2XXX02XX | BNQSXX2XXX02XX | BNQSXX2XXX02XX | BNQSXX2XXX02XX |

Table 3
Summary Table
(Method Blank Evaluation)

| SAMPLE LOCATION: | | 13MW1303XX02XX | EPMW306XXX02XX | EPMW306XXX02XD | 13MWGZA3XX02XX | EPMW307XXX02XX | EPMW308XXX02XX | EPMW309AXX02XX | EPMW309BXX02XX |
|---|---|---|---|---|---|---|---|---|---|
| LAB NUMBER: | | 01 | 02 | 03 | 06 | 07 | 08 | 09 | 10 |
| DATE SAMPLED: | | 11/07/90 | 11/07/90 | 11/07/90 | 11/07/90 | 11/07/90 | 11/07/90 | 11/07/90 | 11/07/90 |
| ANALYTE | DL | | | | | | | | |
| Chloride | 1.0 | 20 | 10 | 10 | 10 | 8.3 | 96 | 23 | 19 |
| Sulfate | 1.0 | 23 | 5.9 | 5.9 | 13 | 4.6 | 16 | 7.5 | 9.1 |
| Associated Method Blank: | | BN17-CLS04 | BN17-CLS04 | BN17-CLS04 | BN17-CLS04 | BN17-CLS04 | BN17-CLS04 | BN17-CLS04 | BN17-CLS04 |
| Associated Equipment Blank: | | BNQSXX2XXX02XX | BNQSXX2XXX02XX | BNQSXX2XXX02XX | BNQSXX2XXX02XX | BNQSXX2XXX02XX | BNQSXX2XXX02XX | BNQSXX2XXX02XX | BNQSXX2XXX02XX |

Table 3
Summary Table
(Method Blank Evaluation)

| SAMPLE LOCATION: | | 01MW209XXX02XX | EPMW310XXX02XX | EPMW311XXX02XX | EPMW311XXX02XD | EPMW312XXX02XX |
|---|---|---|---|---|---|---|
| LAB NUMBER: | | 01 | 02 | 03 | 04 | 05 |
| DATE SAMPLED: | | 11/08/90 | 11/08/90 | 11/09/90 | 11/09/90 | 11/09/90 |
| ANALYTE | DL | | | | | |
| Chloride | 1.0 | 6.2 | 8.9 | 9.1 | 9.1 | 41 |
| Sulfate | 1.0 | 5.6 | 3.4 | 4.2 | 3.8 | 9.9 |
| Associated Method Blank: | | BN06-CLS04 | BN06-CLS04 | BN06-CLS04 | BN06-CLS04 | BN06-CLS04 |

Table 3
Summary Table
(Method Blank Evaluation)

SAMPLE LOCATION: 08MW811XXX02XX
LAB NUMBER: 01
DATE SAMPLED: 11/12/90

| ANALYTE | DL | |
|---|---|---|
| Chloride | 1.0 | 56 |
| Sulfate | 1.0 | - |

Associated Method Blank: BN02-CLS04

L-66

Table 3
Summary Table
(Method Blank Evaluation)

| | | | | | | | | | |
|---|---|---|---|---|---|---|---|---|---|
| | SAMPLE LOCATION: | EPMW301XXX02XX | EPMW301XXX02XD | EPMW302XXX02XX | EPMW303XXX02XX | EPMW304XXX02XX | EPMW305XXX02XX | 06MW320XXX02XX | 06MW321XXX02XX |
| | LAB NUMBER: | 01 | 02 | 05 | 06 | 07 | 08 | 09 | 10 |
| | DATE SAMPLED: | 11/05/90 | 11/05/90 | 11/06/90 | 11/06/90 | 11/06/90 | 11/06/90 | 11/06/90 | 11/06/90 |
| ANALYTE | DL | | | | | | | | |
| Chloride | 1.0 | 4.0 | 4.0 | 6.0 | 6.2 | 5.8 | 8.7 | 4.6 | 7.3 |
| Sulfate | 1.0 | 2.3 J | - | 1.6 | 1.0 | 1.6 | - | 4.6 | 4.0 |
| Associated Method Blank: | | BN15-CLS04 | BN15-CLS04 | BN15-CLS04 | BN15-CLS04 | BN15-CLS04 | BN15-CLS04 | BN15-CLS04 | BN15-CLS04 |
| Associated Equipment Blank: | | BNQSXX1XXX02XX | BNQSXX1XXX02XX | BNQSXX1XXX02XX | BNQSXX1XXX02XX | BNQSXX1XXX02XX | BNQSXX1XXX02XX | BNQSXX1XXX02XX | BNQSXX1XXX02XX |

Table 3
Summary Table
(Method Blank Evaluation)

| | SAMPLE LOCATION: | EPMW316BXX02XX | EPMW317AXX02XX | EPMW317BXX02XX | EPMW318XXX02XX |
|---|---|---|---|---|---|
| | LAB NUMBER: | 09 | 10 | 11 | 12 |
| | DATE SAMPLED: | 11/08/90 | 11/07/90 | 11/07/90 | 11/08/90 |
| ANALYTE | DL | | | | |
| Chloride | 1.0 | 4.6 | 16 | 13 | 5.2 |
| Sulfate | 1.0 | 7.4 | 18 | 18 | 4.8 |

| | | | | |
|---|---|---|---|---|
| Associated Method Blank: | BN14-CLS04 | BN14-CLS04 | BN14-CLS04 | BN14-CLS04 |
| Associated Equipment Blank: | BNQSXX3XXX02XX | BNQSXX3XXX02XX | BNQSXX3XXX02XX | BNQSXX3XXX02XX |

L-68

Table 3
Summary Table
(Method Blank Evaluation)

| | | | | |
|---|---|---|---|---|
| | SAMPLE LOCATION: | 06MW322XXX02XX | 06MW323XXX02XX | 11MW1103XX02XX |
| | LAB NUMBER: | 11 | 12 | 13 |
| | DATE SAMPLED: | 11/06/90 | 11/06/90 | 11/06/90 |
| ANALYTE | DL | | | |
| Chloride | 1.0 | 20 | 12 | 6.0 |
| Sulfate | 1.0 | 6.9 | 16 | - |
| Associated Method Blank: | | BN15-CLS04 | BN15-CLS04 | BN15-CLS04 |
| Associated Equipment Blank: | | BNQSXX1XXX02XX | BNQSXX1XXX02XX | BNQSXX1XXX02XX |

SOIL DATA

PROJECT: Naval Air Station Brunswick - Round 5 Volatile Organic Soil Analysis (ug/kg) 12/03/90

Table 3
Summary Table

| SAMPLE LOCATION: | 09PS903X0101XD | 09PS903X0101XX | 09PS903X0201XX | 09PS903X0601XX | 09PS904X0101XD | 09PS904X0101XX | 09PS904X0301XX | 09PS904X0701XX |
|---|---|---|---|---|---|---|---|---|
| LAB NUMBER: | 370483 | 370454 | 370481 | 370455 | 370475 | 370477 | 370479 | 370472 |
| DATE SAMPLED: | 09/18/90 | 09/18/90 | 09/18/90 | 09/18/90 | 09/18/90 | 09/18/90 | 09/18/90 | 09/18/90 |
| DATE ANALYZED: | 09/26/90 | 09/25/90 | 09/26/90 | 09/26/90 | 09/26/90 | 09/26/90 | 09/26/90 | 09/26/90 |
| ANALYTE | CRQL | | | | | | | |
| Chloromethane | 10 | - | - | - | - | - | - | - |
| Bromomethane | 10 | - | - | - | - | - | - | - |
| Vinyl Chloride | 10 | - | - | - | - | - | - | - |
| Chloroethane | 10 | - | - | - | - | - | - | - |
| Methylene Chloride | 5 | - | - | - | - | - | - | - |
| Acetone | 10 | - | - | - | - | - | - | - |
| Carbon Disulfide | 5 | - | - | - | - | - | - | - |
| 1,1-Dichloroethene | 5 | - | - | - | - | - | - | - |
| 1,1-Dichloroethane | 5 | - | - | - | - | - | - | - |
| 1,2-Dichloroethene (total) | 5 | - | - | - | - | - | - | - |
| Chloroform | 5 | - | - | - | - | - | - | - |
| 1,2-Dichloroethane | 5 | - | - | - | - | - | - | - |
| 2-Butanone | 10 | - | - | - | - | - | - | - |
| 1,1,1-Trichloroethane | 5 | - | - | - | - | - | - | - |
| Carbon Tetrachloride | 5 | - | - | - | - | - | - | - |
| Vinyl Acetate | 10 | - | - | - | - | - | - | - |
| Bromodichloromethane | 5 | - | - | - | - | - | - | - |
| 1,2-Dichloropropane | 5 | - | - | - | - | - | - | - |
| cis-1,3-Dichloropropene | 5 | - | - | - | - | - | - | - |
| Trichloroethene | 5 | - | - | - | - | - | - | - |
| Dibromochloromethane | 5 | - | - | - | - | - | - | - |
| 1,1,2-Trichloroethane | 5 | - | - | - | - | - | - | - |
| Benzene | 5 | - | - | - | - | - | - | - |
| trans-1,3-Dichloropropene | 5 | - | - | - | - | - | - | - |
| Bromoform | 5 | - | - | - | - | - | - | - |
| 4-Methyl-2-Pentanone | 10 | - | - | - | - | - | - | - |
| 2-Hexanone | 10 | - | - | - | - | - | - | - |
| Tetrachloroethene | 5 | - | - | - | - | - | - | - |
| 1,1,2,2-Tetrachloroethane | 5 | - | - | - | - | - | - | - |
| Toluene | 5 | - | - | - | - | - | - | - |
| Chlorobenzene | 5 | - | - | - | - | - | - | - |
| Ethylbenzene | 5 | - | - | - | - | - | - | - |
| Styrene | 5 | - | - | - | - | - | - | - |
| Total Xylenes | 5 | - | - | - | - | - | - | - |
| Dilution Factor: | | 1.0 | 1.0 | 1.0 | 1.0 | 1.0 | 1.0 | 1.0 |
| Percent Solids: | | 94 | 94 | 97 | 94 | 88 | 89 | 96 | 92 |
| Associated Method Blank: | | GH070852A12 | GH070847C12 | GH070851B12 | GH070851B12 | GH070851B12 | GH070851B12 | GH070851B12 | GH070851B12 |
| Associated Equipment Blank: | | - | - | - | - | - | - | - | - |
| Associated Field Blank: | | - | - | - | - | - | - | - | - |
| Associated Trip Blank: | | - | - | - | - | - | - | - | - |

Site: Neptune Drive Disposal Area

PROJECT: Naval Air Station Brunswick - Round 5 | Volatile Organic Soil Analysis (ug/kg) | 12/03/90

Table 3
Summary Table

| SAMPLE LOCATION: | | 09PS905X0101XD | 09PS905X0101XX | 09PS905X0301XX | 09PS905X0601XX | 09PS906X0101XX | 09PS906X0301XX | 09PS906X0601XX | 09PS907X0201XX |
|---|---|---|---|---|---|---|---|---|---|
| LAB NUMBER: | | 370445 | 370442 | 370444 | 370443 | 370451 | 370441 | 370452 | 370450 |
| DATE SAMPLED: | | 09/18/90 | 09/18/90 | 09/18/90 | 09/18/90 | 09/19/90 | 09/19/90 | 09/19/90 | 09/19/90 |
| DATE ANALYZED: | | 09/25/90 | 09/24/90 | 09/25/90 | 09/24/90 | 09/26/90 | 09/24/90 | 09/26/90 | 09/26/90 |
| ANALYTE | CRQL | | | | | | | | |
| Chloromethane | 10 | - | - | - | - | - | - | - | - |
| Bromomethane | 10 | - | - | - | - | - | - | - | - |
| Vinyl Chloride | 10 | - | - | - | - | - | - | - | - |
| Chloroethane | 10 | - | - | - | - | - | - | - | - |
| Methylene Chloride | 5 | - | - | - | - | - | - | - | - |
| Acetone | 10 | - | - | - | - | - | - | - | - |
| Carbon Disulfide | 5 | - | - | - | - | - | - | - | - |
| 1,1-Dichloroethene | 5 | - | - | - | - | - | - | - | - |
| 1,1-Dichloroethane | 5 | - | - | - | - | - | - | - | - |
| 1,2-Dichloroethene (total) | 5 | - | - | - | - | - | - | - | - |
| Chloroform | 5 | - | - | - | - | - | - | - | - |
| 1,2-Dichloroethane | 5 | - | - | - | - | - | - | - | - |
| 2-Butanone | 10 | - | - | - | - | - | - | - | - |
| 1,1,1-Trichloroethane | 5 | - | - | - | - | - | - | - | - |
| Carbon Tetrachloride | 5 | - | - | - | - | - | - | - | - |
| Vinyl Acetate | 10 | - | - | - | - | - | - | - | - |
| Bromodichloromethane | 5 | - | - | - | - | - | - | - | - |
| 1,2-Dichloropropane | 5 | - | - | - | - | - | - | - | - |
| cis-1,3-Dichloropropene | 5 | - | - | - | - | - | - | - | - |
| Trichloroethene | 5 | - | - | - | - | - | - | - | - |
| Dibromochloromethane | 5 | - | - | - | - | - | - | - | - |
| 1,1,2-Trichloroethane | 5 | - | - | - | - | - | - | - | - |
| Benzene | 5 | - | - | - | - | - | - | - | - |
| trans-1,3-Dichloropropene | 5 | - | - | - | - | - | - | - | - |
| Bromoform | 5 | - | - | - | - | - | - | - | - |
| 4-Methyl-2-Pentanone | 10 | - | - | - | - | - | - | - | - |
| 2-Hexanone | 10 | - | - | - | - | - | - | - | - |
| Tetrachloroethene | 5 | - | - | - | - | - | - | - | - |
| 1,1,2,2-Tetrachloroethane | 5 | - | - | - | - | - | - | - | - |
| Toluene | 5 | - | - | - | - | - | - | - | - |
| Chlorobenzene | 5 | - | - | - | - | - | - | - | - |
| Ethylbenzene | 5 | - | - | - | - | - | - | - | - |
| Styrene | 5 | - | - | - | - | - | - | - | - |
| Total Xylenes | 5 | - | - | - | - | - | - | - | - |
| Dilution Factor: | | 1.0 | 1.0 | 1.0 | 1.0 | 1.0 | 1.0 | 1.0 | 1.0 |
| Percent Solids: | | 94 | 94 | 97 | 91 | 94 | 96 | 91 | 93 |
| Associated Method Blank: | | GH070846B12 | GH070846B12 | GH070846B12 | GH070846B12 | GH070851B12 | GH070846B12 | GH070851B12 | GH070851B12 |
| Associated Equipment Blank: | | - | - | - | - | - | - | - | - |
| Associated Field Blank: | | - | - | - | - | - | - | - | - |
| Associated Trip Blank: | | - | - | - | - | - | - | - | - |

Site: Neptune Drive Disposal Area

Table 3
Summary Table

| SAMPLE LOCATION: | | 09PS907X0401XX | 09PS907X0701XX | 09PS908X0101XX | 09PS908X0301XX | 09PS908X0801XX | 09PS909X0101XX | 09PS909X0301XX | 09PS909X0601XX |
|---|---|---|---|---|---|---|---|---|---|
| LAB NUMBER: | | 370446 | 370448 | 370907 | 370922 | 370909 | 370447 | 370449 | 370453 |
| DATE SAMPLED: | | 09/19/90 | 09/19/90 | 09/19/90 | 09/19/90 | 09/19/90 | 09/19/90 | 09/19/90 | 09/19/90 |
| DATE ANALYZED: | | 09/25/90 | 09/25/90 | 10/01/90 | 10/01/90 | 10/01/90 | 09/25/90 | 09/26/90 | 09/26/90 |
| ANALYTE | CRQL | | | | | | | | |
| Chloromethane | 10 | - | - | - | - | - | - | - | - |
| Bromomethane | 10 | - | - | - | - | - | - | - | - |
| Vinyl Chloride | 10 | - | - | - | - | - | - | - | - |
| Chloroethane | 10 | - | - | - | - | - | - | - | - |
| Methylene Chloride | 5 | - | - | - | - | - | - | - | - |
| Acetone | 10 | - | - | - | - | - | - | - | - |
| Carbon Disulfide | 5 | - | - | - | - | - | - | - | - |
| 1,1-Dichloroethene | 5 | - | - | - | - | - | - | - | - |
| 1,1-Dichloroethane | 5 | - | - | - | - | - | - | - | - |
| 1,2-Dichloroethene (total) | 5 | - | - | - | - | - | - | - | - |
| Chloroform | 5 | - | - | - | - | - | - | - | - |
| 1,2-Dichloroethane | 5 | - | - | - | - | - | - | - | - |
| 2-Butanone | 10 | - | - | - | - | - | - | - | - |
| 1,1,1-Trichloroethane | 5 | - | - | - | - | - | - | - | - |
| Carbon Tetrachloride | 5 | - | - | - | - | - | - | - | - |
| Vinyl Acetate | 10 | - | - | - | - | - | - | - | - |
| Bromodichloromethane | 5 | - | - | - | - | - | - | - | - |
| 1,2-Dichloropropane | 5 | - | - | - | - | - | - | - | - |
| cis-1,3-Dichloropropene | 5 | - | - | - | - | - | - | - | - |
| Trichloroethene | 5 | - | - | - | - | - | - | - | - |
| Dibromochloromethane | 5 | - | - | - | - | - | - | - | - |
| 1,1,2-Trichloroethane | 5 | - | - | - | - | - | - | - | - |
| Benzene | 5 | - | - | - | - | - | - | - | - |
| trans-1,3-Dichloropropene | 5 | - | - | - | - | - | - | - | - |
| Bromoform | 5 | - | - | - | - | - | - | - | - |
| 4-Methyl-2-Pentanone | 10 | - | - | - | - | - | - | - | - |
| 2-Hexanone | 10 | - | - | - | - | - | - | - | - |
| Tetrachloroethene | 5 | - | - | - | - | - | - | - | - |
| 1,1,2,2-Tetrachloroethane | 5 | - | - | - | - | - | - | - | - |
| Toluene | 5 | - | - | - | - | - | - | - | - |
| Chlorobenzene | 5 | - | - | - | - | - | - | - | - |
| Ethylbenzene | 5 | - | - | - | - | - | - | - | - |
| Styrene | 5 | - | - | - | - | - | - | - | - |
| Total Xylenes | 5 | - | - | - | - | - | - | - | - |
| Dilution Factor: | | 1.0 | 1.0 | 1.0 | 1.0 | 1.0 | 1.0 | 1.0 | 1.0 |
| Percent Solids: | | 90 | 78 | 98 | 98 | 79 | 95 | 93 | 77 |
| Associated Method Blank: | | GH070846B12 | GH070851B12 | GH071413C13 | GH071413C13 | GH071413C13 | GH070846B12 | GH070851B12 | GH070851B12 |
| Associated Equipment Blank: | | - | - | - | - | - | - | - | - |
| Associated Field Blank: | | - | - | - | - | - | - | - | - |
| Associated Trip Blank: | | - | - | - | - | - | - | - | - |

Site: Neptune Drive Disposal Area

Table 3
Summary Table

| SAMPLE LOCATION: | 09PS910X0201XX | 09PS910X0401XX | 09PS910X0701XX | 09PS911X0201XX | 09PS911X0401XX | 09PS911X0801XX |
|---|---|---|---|---|---|---|
| LAB NUMBER: | 370934 | 370913 | 370927 | 370932 | 370936 | 370938 |
| DATE SAMPLED: | 09/19/90 | 09/19/90 | 09/19/90 | 09/19/90 | 09/19/90 | 09/19/90 |
| DATE ANALYZED: | 10/01/90 | 10/01/90 | 10/01/90 | 10/01/90 | 10/01/90 | 10/01/90 |
| ANALYTE | CRQL | | | | | |
| Chloromethane | 10 | - | - | - | - | - | - |
| Bromomethane | 10 | - | - | - | - | - | - |
| Vinyl Chloride | 10 | - | - | - | - | - | - |
| Chloroethane | 10 | - | - | - | - | - | - |
| Methylene Chloride | 5 | - | - | - | - | - | - |
| Acetone | 10 | - | - | - | - | - | - |
| Carbon Disulfide | 5 | - | - | - | - | - | - |
| 1,1-Dichloroethene | 5 | - | - | - | - | - | - |
| 1,1-Dichloroethane | 5 | - | - | - | - | - | - |
| 1,2-Dichloroethene (total) | 5 | - | - | - | - | - | - |
| Chloroform | 5 | - | - | - | - | - | - |
| 1,2-Dichloroethane | 5 | - | - | - | - | - | - |
| 2-Butanone | 10 | - | - | - | - | - | - |
| 1,1,1-Trichloroethane | 5 | - | - | - | - | - | - |
| Carbon Tetrachloride | 5 | - | - | - | - | - | - |
| Vinyl Acetate | 10 | - | - | - | - | - | - |
| Bromodichloromethane | 5 | - | - | - | - | - | - |
| 1,2-Dichloropropane | 5 | - | - | - | - | - | - |
| cis-1,3-Dichloropropene | 5 | - | - | - | - | - | - |
| Trichloroethene | 5 | - | - | - | - | - | - |
| Dibromochloromethane | 5 | - | - | - | - | - | - |
| 1,1,2-Trichloroethane | 5 | - | - | - | - | - | - |
| Benzene | 5 | - | - | - | - | - | - |
| trans-1,3-Dichloropropene | 5 | - | - | - | - | - | - |
| Bromoform | 5 | - | - | - | - | - | - |
| 4-Methyl-2-Pentanone | 10 | - | - | - | - | - | - |
| 2-Hexanone | 10 | - | - | - | - | - | - |
| Tetrachloroethene | 5 | - | - | - | - | - | - |
| 1,1,2,2-Tetrachloroethane | 5 | - | - | - | - | - | - |
| Toluene | 5 | - | - | - | - | - | - |
| Chlorobenzene | 5 | - | - | - | - | - | - |
| Ethylbenzene | 5 | - | - | - | - | - | - |
| Styrene | 5 | - | - | - | - | - | - |
| Total Xylenes | 5 | - | - | - | - | - | - |
| Dilution Factor: | | 1.0 | 1.0 | 1.0 | 1.0 | 1.0 | 1.0 |
| Percent Solids: | | 91 | 93 | 92 | 95 | 92 | 88 |
| Associated Method Blank: | | GH071413C13 | GH071413C13 | GH071413C13 | GH071413C13 | GH071413C13 | GH071413C13 |
| Associated Equipment Blank: | | - | - | - | - | - | - |
| Associated Field Blank: | | - | - | - | - | - | - |
| Associated Trip Blank: | | - | - | - | - | - | - |

Site: Neptune Drive Disposal Area

PROJECT: Naval Air Station Brunswick - Round 5 Semivolatile Organic Soil Analysis (ug/kg) 12/03/90

Table 3
Summary Table

| | | | | | | | | | |
|---|---|---|---|---|---|---|---|---|---|
| | SAMPLE LOCATION: | 09PS903X0101XD | 09PS903X0101XX | 09PS903X0201XX | 09PS903X0601XX | 09PS904X0101XD | 09PS904X0101XX | 09PS904X0301XX | 09PS904X0701XX |
| | LAB NUMBER: | 370483 | 370454 | 370481 | 370455 | 370475 | 370477 | 370479 | 370472 |
| | DATE SAMPLED: | 09/18/90 | 09/18/90 | 09/18/90 | 09/18/90 | 09/18/90 | 09/18/90 | 09/18/90 | 09/18/90 |
| | DATE EXTRACTED: | 09/20/90 | 09/21/90 | 09/20/90 | 09/20/90 | 09/20/90 | 09/20/90 | 09/20/90 | 09/20/90 |
| | DATE ANALYZED: | 09/26/90 | 09/25/90 | 09/26/90 | 09/24/90 | 09/24/90 | 09/26/90 | 09/26/90 | 09/24/90 |
| ANALYTE | CRQL | | | | | | | | |
| Phenol | 330 | - | - | - | - | - | - | - | - |
| bis(2-Chloroethyl)ether | 330 | - | - | - | - | - | - | - | - |
| 2-Chlorophenol | 330 | - | - | - | - | - | - | - | - |
| 1,3-Dichlorobenzene | 330 | - | - | - | - | - | - | - | - |
| 1,4-Dichlorobenzene | 330 | - | - | - | - | - | - | - | - |
| Benzyl Alcohol | 330 | - | - | - | - | - | - | - | - |
| 1,2-Dichlorobenzene | 330 | - | - | - | - | - | - | - | - |
| 2-Methylphenol | 330 | - | - | - | - | - | - | - | - |
| bis(2-Chloroisopropyl)ether | 330 | - | - | - | - | - | - | - | - |
| 4-Methylphenol | 330 | - | - | - | - | - | - | - | - |
| N-Nitroso-di-n-propylamine | 330 | - | - | - | - | - | - | - | - |
| Hexachloroethane | 330 | - | - | - | - | - | - | - | - |
| Nitrobenzene | 330 | - | - | - | - | - | - | - | - |
| Isophorone | 330 | - | - | - | - | - | - | - | - |
| 2-Nitrophenol | 330 | - | - | - | - | - | - | - | - |
| 2,4-Dimethylphenol | 330 | - | - | - | - | - | - | - | - |
| Benzoic Acid | 1600 | - | - | - | - | - | - | - | - |
| bis(2-Chloroethoxy)methane | 330 | - | - | - | - | - | - | - | - |
| 2,4-Dichlorophenol | 330 | - | - | - | - | - | - | - | - |
| 1,2,4-Trichlorobenzene | 330 | - | - | - | - | - | - | - | - |
| Naphthalene | 330 | - | - | - | - | - | - | - | - |
| 4-Chloroaniline | 330 | - | - | - | - | - | - | - | - |
| Hexachlorobutadiene | 330 | - | - | - | - | - | - | - | - |
| 4-Chloro-3-Methylphenol | 330 | - | - | - | - | - | - | - | - |
| 2-Methylnaphthalene | 330 | - | - | - | - | - | - | - | - |
| Hexachlorocyclopentadiene | 330 | - | - | - | - | - | - | - | - |
| 2,4,6-Trichlorophenol | 330 | - | - | - | - | - | - | - | - |
| 2,4,5-Trichlorophenol | 1600 | - | - | - | - | - | - | - | - |
| 2-Chloronaphthalene | 330 | - | - | - | - | - | - | - | - |
| 2-Nitroaniline | 1600 | - | - | - | - | - | - | - | - |
| Dimethylphthalate | 330 | - | - | - | - | - | - | - | - |
| Acenaphthylene | 330 | - | - | - | - | - | - | - | - |
| 2,6-Dinitrotoluene | 330 | - | - | - | - | - | - | - | - |

Site: Neptune Drive Disposal Area

Table 3
Summary Table

| SAMPLE LOCATION: | | 09PS903X0101XD | 09PS903X0101XX | 09PS903X0201XX | 09PS903X0601XX | 09PS904X0101XD | 09PS904X0101XX | 09PS904X0301XX | 09PS904X0701XX |
|---|---|---|---|---|---|---|---|---|---|
| LAB NUMBER: | | 370483 | 370454 | 370481 | 370455 | 370475 | 370477 | 370479 | 370472 |
| DATE SAMPLED: | | 09/18/90 | 09/18/90 | 09/18/90 | 09/18/90 | 09/18/90 | 09/18/90 | 09/18/90 | 09/18/90 |
| DATE EXTRACTED: | | 09/20/90 | 09/21/90 | 09/20/90 | 09/20/90 | 09/20/90 | 09/20/90 | 09/20/90 | 09/20/90 |
| DATE ANALYZED: | | 09/26/90 | 09/25/90 | 09/26/90 | 09/24/90 | 09/24/90 | 09/26/90 | 09/26/90 | 09/24/90 |
| ANALYTE | CRQL | | | | | | | | |
| 3-Nitroaniline | 1600 | - | - | - | - | - | - | - | - |
| Acenaphthene | 330 | - | - | - | - | - | - | - | - |
| 2,4-Dinitrophenol | 1600 | - | - | - | - | - | - | - | - |
| 4-Nitrophenol | 1600 | - | - | - | - | - | - | - | - |
| Dibenzofuran | 330 | - | - | - | - | - | - | - | - |
| 2,4-Dinitrotoluene | 330 | - | - | - | - | - | - | - | - |
| Diethylphthalate | 330 | - | - | - | - | - | - | - | - |
| 4-Chlorophenyl-phenylether | 330 | - | - | - | - | - | - | - | - |
| Fluorene | 330 | - | - | - | - | - | - | - | - |
| 4-Nitroaniline | 1600 | - | - | - | - | - | - | - | - |
| 4,6-Dinitro-2-methylphenol | 1600 | - | - | - | - | - | - | - | - |
| N-Nitrosodiphenylamine | 330 | - | - | - | - | - | - | - | - |
| 4-Bromophenyl-phenylether | 330 | - | - | - | - | - | - | - | - |
| Hexachlorobenzene | 330 | - | - | - | - | - | - | - | - |
| Pentachlorophenol | 1600 | - | - | - | - | - | - | - | - |
| Phenanthrene | 330 | - | - | - | - | - | 690 | - | - |
| Anthracene | 330 | - | - | - | - | - | - | - | - |
| Di-n-butylphthalate | 330 | - | - | - | - | - | - | - | - |
| Fluoranthene | 330 | - | - | - | - | 480 J | 2000 J | - | - |
| Pyrene | 330 | - | - | - | - | 390 J | 1500 J | - | - |
| Butylbenzylphthalate | 330 | - | - | - | - | - | - | - | - |
| 3,3'-Dichlorobenzidine | 660 | - | - | - | - | - | - | - | - |
| Benzo(a)Anthracene | 330 | - | - | - | - | - | 910 J | - | - |
| Chrysene | 330 | - | - | - | - | 380 J | 1100 J | - | - |
| bis(2-Ethylhexyl)phthalate | 330 | - | - | - | - | - | - | - | - |
| Di-n-octylphthalate | 330 | - | - | - | - | - | - | - | - |
| Benzo(b)Fluoranthene | 330 | - | - | - | - | - | 730 J | - | - |
| Benzo(k)Fluoranthene | 330 | - | - | - | - | 400 J | 890 J | - | - |
| Benzo(a)Pyrene | 330 | - | - | - | - | - | 820 J | - | - |
| Indeno(1,2,3-c,d)Pyrene | 330 | - | - | - | - | - | 440 J | - | - |
| Dibenz(a,h)Anthracene | 330 | - | - | - | - | - | - | - | - |
| Benzo(g,h,i)perylene | 330 | - | - | - | - | - | 520 J | - | - |
| Dilution Factor: | | 1.0 | 1.0 | 1.0 | 1.0 | 1.0 | 1.0 | 1.0 | 1.0 |
| Percent Solids: | | 94 | 94 | 97 | 94 | 88 | 89 | 96 | 92 |
| Associated Method Blank: | | GH070731B07 | GH070856C20 | GH070731B07 | GH070731B07 | GH070731B07 | GH070731B07 | GH070731B07 | GH070731B07 |
| Associated Equipment Blank: | | - | - | - | - | - | - | - | - |
| Associated Field Blank: | | - | - | - | - | - | - | - | - |

Site: Neptune Drive Disposal Area

Table 3
Summary Table

| SAMPLE LOCATION: | | 09PS905X0101XD | 09PS905X0101XX | 09PS905X0301XX | 09PS905X0601XX | 09PS906X0101XX | 09PS906X0301XX | 09PS906X0601XX | 09PS907X0201XX |
|---|---|---|---|---|---|---|---|---|---|
| LAB NUMBER: | | 370445 | 370442 | 370444 | 370443 | 370451 | 370441 | 370452 | 370450 |
| DATE SAMPLED: | | 09/18/90 | 09/18/90 | 09/18/90 | 09/18/90 | 09/19/90 | 09/19/90 | 09/19/90 | 09/19/90 |
| DATE EXTRACTED: | | 09/21/90 | 09/21/90 | 09/21/90 | 09/21/90 | 09/21/90 | 09/21/90 | 09/21/90 | 09/21/90 |
| DATE ANALYZED: | | 09/25/90 | 09/24/90 | 09/24/90 | 09/24/90 | 09/27/90 | 09/24/90 | 09/27/90 | 09/27/90 |
| ANALYTE | CRQL | | | | | | | | |
| Phenol | 330 | - | - | - | - | - | - | - | - |
| bis(2-Chloroethyl)ether | 330 | - | - | - | - | - | - | - | - |
| 2-Chlorophenol | 330 | - | - | - | - | - | - | - | - |
| 1,3-Dichlorobenzene | 330 | - | - | - | - | - | - | - | - |
| 1,4-Dichlorobenzene | 330 | - | - | - | - | - | - | - | - |
| Benzyl Alcohol | 330 | - | - | - | - | - | - | - | - |
| 1,2-Dichlorobenzene | 330 | - | - | - | - | - | - | - | - |
| 2-Methylphenol | 330 | - | - | - | - | - | - | - | - |
| bis(2-Chloroisopropyl)ether | 330 | - | - | - | - | - | - | - | - |
| 4-Methylphenol | 330 | - | - | - | - | - | - | - | - |
| N-Nitroso-di-n-propylamine | 330 | - | - | - | - | - | - | - | - |
| Hexachloroethane | 330 | - | - | - | - | - | - | - | - |
| Nitrobenzene | 330 | - | - | - | - | - | - | - | - |
| Isophorone | 330 | - | - | - | - | - | - | - | - |
| 2-Nitrophenol | 330 | - | - | - | - | - | - | - | - |
| 2,4-Dimethylphenol | 330 | - | - | - | - | - | - | - | - |
| Benzoic Acid | 1600 | - | - | - | - | - | - | - | - |
| bis(2-Chloroethoxy)methane | 330 | - | - | - | - | - | - | - | - |
| 2,4-Dichlorophenol | 330 | - | - | - | - | - | - | - | - |
| 1,2,4-Trichlorobenzene | 330 | - | - | - | - | - | - | - | - |
| Naphthalene | 330 | - | - | - | - | - | - | - | - |
| 4-Chloroaniline | 330 | - | - | - | - | - | - | - | - |
| Hexachlorobutadiene | 330 | - | - | - | - | - | - | - | - |
| 4-Chloro-3-Methylphenol | 330 | - | - | - | - | - | - | - | - |
| 2-Methylnaphthalene | 330 | - | - | - | - | - | - | - | - |
| Hexachlorocyclopentadiene | 330 | - | - | - | - | - | - | - | - |
| 2,4,6-Trichlorophenol | 330 | - | - | - | - | - | - | - | - |
| 2,4,5-Trichlorophenol | 1600 | - | - | - | - | - | - | - | - |
| 2-Chloronaphthalene | 330 | - | - | - | - | - | - | - | - |
| 2-Nitroaniline | 1600 | - | - | - | - | - | - | - | - |
| Dimethylphthalate | 330 | - | - | - | - | - | - | - | - |
| Acenaphthylene | 330 | - | - | - | - | - | - | - | - |
| 2,6-Dinitrotoluene | 330 | - | - | - | - | - | - | - | - |

Site: Neptune Drive Disposal Area

Table 3
Summary Table

| SAMPLE LOCATION: | | 09PS905X0101XD | 09PS905X0101XX | 09PS905X0301XX | 09PS905X0601XX | 09PS906X0101XX | 09PS906X0301XX | 09PS906X0601XX | 09PS907X0201XX |
|---|---|---|---|---|---|---|---|---|---|
| LAB NUMBER: | | 370445 | 370442 | 370444 | 370443 | 370451 | 370441 | 370452 | 370450 |
| DATE SAMPLED: | | 09/18/90 | 09/18/90 | 09/18/90 | 09/18/90 | 09/19/90 | 09/19/90 | 09/19/90 | 09/19/90 |
| DATE EXTRACTED: | | 09/21/90 | 09/21/90 | 09/21/90 | 09/21/90 | 09/21/90 | 09/21/90 | 09/21/90 | 09/21/90 |
| DATE ANALYZED: | | 09/25/90 | 09/24/90 | 09/24/90 | 09/24/90 | 09/27/90 | 09/24/90 | 09/27/90 | 09/27/90 |
| ANALYTE | CRQL | | | | | | | | |
| 3-Nitroaniline | 1600 | - | - | - | - | - | - | - | - |
| Acenaphthene | 330 | - | - | - | - | - | - | - | - |
| 2,4-Dinitrophenol | 1600 | - | - | - | - | - | - | - | - |
| 4-Nitrophenol | 1600 | - | - | - | - | - | - | - | - |
| Dibenzofuran | 330 | - | - | - | - | - | - | - | - |
| 2,4-Dinitrotoluene | 330 | - | - | - | - | - | - | - | - |
| Diethylphthalate | 330 | - | - | - | - | - | - | - | - |
| 4-Chlorophenyl-phenylether | 330 | - | - | - | - | - | - | - | - |
| Fluorene | 330 | - | - | - | - | - | - | - | - |
| 4-Nitroaniline | 1600 | - | - | - | - | - | - | - | - |
| 4,6-Dinitro-2-methylphenol | 1600 | - | - | - | - | - | - | - | - |
| N-Nitrosodiphenylamine | 330 | - | - | - | - | - | - | - | - |
| 4-Bromophenyl-phenylether | 330 | - | - | - | - | - | - | - | - |
| Hexachlorobenzene | 330 | - | - | - | - | - | - | - | - |
| Pentachlorophenol | 1600 | - | - | - | - | - | - | - | - |
| Phenanthrene | 330 | - | - | - | - | - | - | - | - |
| Anthracene | 330 | - | - | - | - | - | - | - | - |
| Di-n-butylphthalate | 330 | - | - | - | - | - | - | - | - |
| Fluoranthene | 330 | - | - | - | - | - | - | - | - |
| Pyrene | 330 | - | - | - | - | - | - | - | - |
| Butylbenzylphthalate | 330 | - | - | - | - | - | - | - | - |
| 3,3'-Dichlorobenzidine | 660 | - | - | - | - | - | - | - | - |
| Benzo(a)Anthracene | 330 | - | - | - | - | - | - | - | - |
| Chrysene | 330 | - | - | - | - | - | - | - | - |
| bis(2-Ethylhexyl)phthalate | 330 | - | - | - | - | - | - | - | - |
| Di-n-octylphthalate | 330 | - | - | - | - | - | - | - | - |
| Benzo(b)Fluoranthene | 330 | - | - | - | - | - | - | - | - |
| Benzo(k)Fluoranthene | 330 | - | - | - | - | - | - | - | - |
| Benzo(a)Pyrene | 330 | - | - | - | - | - | - | - | - |
| Indeno(1,2,3-c,d)Pyrene | 330 | - | - | - | - | - | - | - | - |
| Dibenz(a,h)Anthracene | 330 | - | - | - | - | - | - | - | - |
| Benzo(g,h,i)perylene | 330 | - | - | - | - | - | - | - | - |
| Dilution Factor: | | 1.0 | 1.0 | 1.0 | 1.0 | 1.0 | 1.0 | 1.0 | 1.0 |
| Percent Solids: | | 94 | 94 | 97 | 91 | 94 | 96 | 91 | 93 |
| Associated Method Blank: | | GH070859C20 | GH070859C20 | GH070859C20 | GH070859C20 | GJ070860A07 | GH070859C20 | GJ070860A07 | GJ070860A07 |
| Associated Equipment Blank: | | - | - | - | - | - | - | - | - |
| Associated Field Blank: | | - | - | - | - | - | - | - | - |

Site: Neptune Drive Disposal Area

Table 3
Summary Table

| | | | | | | | | | |
|---|---|---|---|---|---|---|---|---|---|
| | SAMPLE LOCATION: | 09PS907X0401XX | 09PS907X0701XX | 09PS908X0101XX | 09PS908X0301XX | 09PS908X0801XX | 09PS909X0101XX | 09PS909X0301XX | 09PS909X0601XX |
| | LAB NUMBER: | 370446 | 370448 | 370907 | 370922 | 370909 | 370447 | 370449 | 370453 |
| | DATE SAMPLED: | 09/19/90 | 09/19/90 | 09/19/90 | 09/19/90 | 09/19/90 | 09/19/90 | 09/19/90 | 09/19/90 |
| | DATE EXTRACTED: | 09/21/90 | 09/21/90 | 09/28/90 | 09/22/90 | 09/28/90 | 09/21/90 | 09/21/90 | 09/21/90 |
| | DATE ANALYZED: | 09/27/90 | 09/27/90 | 10/08/90 | 09/26/90 | 10/08/90 | 09/24/90 | 09/27/90 | 09/27/90 |
| ANALYTE | CRQL | | | | | | | | |
| Phenol | 330 | - | - | - | - | - | - | - | - |
| bis(2-Chloroethyl)ether | 330 | - | - | - | - | - | - | - | - |
| 2-Chlorophenol | 330 | - | - | - | - | - | - | - | - |
| 1,3-Dichlorobenzene | 330 | - | - | - | - | - | - | - | - |
| 1,4-Dichlorobenzene | 330 | - | - | - | - | - | - | - | - |
| Benzyl Alcohol | 330 | - | - | - | - | - | - | - | - |
| 1,2-Dichlorobenzene | 330 | - | - | - | - | - | - | - | - |
| 2-Methylphenol | 330 | - | - | - | - | - | - | - | - |
| bis(2-Chloroisopropyl)ether | 330 | - | - | - | - | - | - | - | - |
| 4-Methylphenol | 330 | - | - | - | - | - | - | - | - |
| N-Nitroso-di-n-propylamine | 330 | - | - | - | - | - | - | - | - |
| Hexachloroethane | 330 | - | - | - | - | - | - | - | - |
| Nitrobenzene | 330 | - | - | - | - | - | - | - | - |
| Isophorone | 330 | - | - | - | - | - | - | - | - |
| 2-Nitrophenol | 330 | - | - | - | - | - | - | - | - |
| 2,4-Dimethylphenol | 330 | - | - | - | - | - | - | - | - |
| Benzoic Acid | 1600 | - | - | - | - | - | - | - | - |
| bis(2-Chloroethoxy)methane | 330 | - | - | - | - | - | - | - | - |
| 2,4-Dichlorophenol | 330 | - | - | - | - | - | - | - | - |
| 1,2,4-Trichlorobenzene | 330 | - | - | - | - | - | - | - | - |
| Naphthalene | 330 | - | - | - | - | - | - | - | - |
| 4-Chloroaniline | 330 | - | - | - | - | - | - | - | - |
| Hexachlorobutadiene | 330 | - | - | - | - | - | - | - | - |
| 4-Chloro-3-Methylphenol | 330 | - | - | - | - | - | - | - | - |
| 2-Methylnaphthalene | 330 | - | - | - | - | - | - | - | - |
| Hexachlorocyclopentadiene | 330 | - | - | - | - | - | - | - | - |
| 2,4,6-Trichlorophenol | 330 | - | - | - | - | - | - | - | - |
| 2,4,5-Trichlorophenol | 1600 | - | - | - | - | - | - | - | - |
| 2-Chloronaphthalene | 330 | - | - | - | - | - | - | - | - |
| 2-Nitroaniline | 1600 | - | - | - | - | - | - | - | - |
| Dimethylphthalate | 330 | - | - | - | - | - | - | - | - |
| Acenaphthylene | 330 | - | - | - | - | - | - | - | - |
| 2,6-Dinitrotoluene | 330 | - | - | - | - | - | - | - | - |

Site: Neptune Drive Disposal Area

Table 3
Summary Table

| SAMPLE LOCATION: | | 09PS907X0401XX | 09PS907X0701XX | 09PS908X0101XX | 09PS908X0301XX | 09PS908X0801XX | 09PS909X0101XX | 09PS909X0301XX | 09PS909X0601XX |
|---|---|---|---|---|---|---|---|---|---|
| LAB NUMBER: | | 370446 | 370448 | 370907 | 370922 | 370909 | 370447 | 370449 | 370453 |
| DATE SAMPLED: | | 09/19/90 | 09/19/90 | 09/19/90 | 09/19/90 | 09/19/90 | 09/19/90 | 09/19/90 | 09/19/90 |
| DATE EXTRACTED: | | 09/21/90 | 09/21/90 | 09/28/90 | 09/22/90 | 09/28/90 | 09/21/90 | 09/21/90 | 09/21/90 |
| DATE ANALYZED: | | 09/27/90 | 09/27/90 | 10/08/90 | 09/26/90 | 10/08/90 | 09/24/90 | 09/27/90 | 09/27/90 |
| ANALYTE | CRQL | | | | | | | | |
| 3-Nitroaniline | 1600 | - | - | - | - | - | - | - | - |
| Acenaphthene | 330 | - | - | - | - | - | - | - | - |
| 2,4-Dinitrophenol | 1600 | - | - | - | - | - | - | - | - |
| 4-Nitrophenol | 1600 | - | - | - | - | - | - | - | - |
| Dibenzofuran | 330 | - | - | - | - | - | - | - | - |
| 2,4-Dinitrotoluene | 330 | - | - | - | - | - | - | - | - |
| Diethylphthalate | 330 | - | - | - | - | - | - | - | - |
| 4-Chlorophenyl-phenylether | 330 | - | - | - | - | - | - | - | - |
| Fluorene | 330 | - | - | - | - | - | - | - | - |
| 4-Nitroaniline | 1600 | - | - | - | - | - | - | - | - |
| 4,6-Dinitro-2-methylphenol | 1600 | - | - | - | - | - | - | - | - |
| N-Nitrosodiphenylamine | 330 | - | - | - | - | - | - | - | - |
| 4-Bromophenyl-phenylether | 330 | - | - | - | - | - | - | - | - |
| Hexachlorobenzene | 330 | - | - | - | - | - | - | - | - |
| Pentachlorophenol | 1600 | - | - | - | - | - | - | - | - |
| Phenanthrene | 330 | - | - | - | - | - | - | - | - |
| Anthracene | 330 | - | - | - | - | - | - | - | - |
| Di-n-butylphthalate | 330 | - | - | - | - | - | - | - | - |
| Fluoranthene | 330 | - | - | - | - | - | - | - | - |
| Pyrene | 330 | - | - | - | - | - | - | - | - |
| Butylbenzylphthalate | 330 | - | - | - | - | - | - | - | - |
| 3,3'-Dichlorobenzidine | 660 | - | - | - | - | - | - | - | - |
| Benzo(a)Anthracene | 330 | - | - | - | - | - | - | - | - |
| Chrysene | 330 | - | - | - | - | - | - | - | - |
| bis(2-Ethylhexyl)phthalate | 330 | - | - | - | - | - | - | - | - |
| Di-n-octylphthalate | 330 | - | - | - | - | - | - | - | - |
| Benzo(b)Fluoranthene | 330 | - | - | - | - | - | - | - | - |
| Benzo(k)Fluoranthene | 330 | - | - | - | - | - | - | - | - |
| Benzo(a)Pyrene | 330 | - | - | - | - | - | - | - | - |
| Indeno(1,2,3-c,d)Pyrene | 330 | - | - | - | - | - | - | - | - |
| Dibenz(a,h)Anthracene | 330 | - | - | - | - | - | - | - | - |
| Benzo(g,h,i)perylene | 330 | - | - | - | - | - | - | - | - |
| Dilution Factor: | | 1.0 | 1.0 | 1.0 | 1.0 | 1.0 | 1.0 | 1.0 | 1.0 |
| Percent Solids: | | 90 | 78 | 98 | 98 | 79 | 95 | 93 | 77 |
| Associated Method Blank: | | GJ070860A07 | GJ070860A07 | GH071687C05 | GH071047A07 | GH071687C05 | GJ070860B08 | GJ070860A07 | GJ070860A07 |
| Associated Equipment Blank: | | - | - | - | - | - | - | - | - |
| Associated Field Blank: | | - | - | - | - | - | - | - | - |

Site: Neptune Drive Disposal Area

Table 3
Summary Table

| SAMPLE LOCATION: | | 09PS910X0201XX | 09PS910X0401XX | 09PS910X0701XX | 09PS911X0201XX | 09PS911X0401XX | 09PS911X0801XX |
|---|---|---|---|---|---|---|---|
| LAB NUMBER: | | 370934 | 370913 | 370927 | 370932 | 370936 | 370938 |
| DATE SAMPLED: | | 09/19/90 | 09/19/90 | 09/19/90 | 09/19/90 | 09/19/90 | 09/19/90 |
| DATE EXTRACTED: | | 09/22/90 | 10/10/90 | 09/22/90 | 09/22/90 | 09/22/90 | 09/22/90 |
| DATE ANALYZED: | | 09/26/90 | 10/12/90 | 09/26/90 | 09/26/90 | 09/26/90 | 09/26/90 |
| ANALYTE | CRQL | | | | | | |
| Phenol | 330 | - | - | - | - | - | - |
| bis(2-Chloroethyl)ether | 330 | - | - | - | - | - | - |
| 2-Chlorophenol | 330 | - | - | - | - | - | - |
| 1,3-Dichlorobenzene | 330 | - | - | - | - | - | - |
| 1,4-Dichlorobenzene | 330 | - | - | - | - | - | - |
| Benzyl Alcohol | 330 | - | - | - | - | - | - |
| 1,2-Dichlorobenzene | 330 | - | - | - | - | - | - |
| 2-Methylphenol | 330 | - | - | - | - | - | - |
| bis(2-Chloroisopropyl)ether | 330 | - | - | - | - | - | - |
| 4-Methylphenol | 330 | - | - | - | - | - | - |
| N-Nitroso-di-n-propylamine | 330 | - | - | - | - | - | - |
| Hexachloroethane | 330 | - | - | - | - | - | - |
| Nitrobenzene | 330 | - | - | - | - | - | - |
| Isophorone | 330 | - | - | - | - | - | - |
| 2-Nitrophenol | 330 | - | - | - | - | - | - |
| 2,4-Dimethylphenol | 330 | - | - | - | - | - | - |
| Benzoic Acid | 1600 | - | - | - | - | - | - |
| bis(2-Chloroethoxy)methane | 330 | - | - | - | - | - | - |
| 2,4-Dichlorophenol | 330 | - | - | - | - | - | - |
| 1,2,4-Trichlorobenzene | 330 | - | - | - | - | - | - |
| Naphthalene | 330 | - | - | - | - | - | - |
| 4-Chloroaniline | 330 | - | - | - | - | - | - |
| Hexachlorobutadiene | 330 | - | - | - | - | - | - |
| 4-Chloro-3-Methylphenol | 330 | - | - | - | - | - | - |
| 2-Methylnaphthalene | 330 | - | - | - | - | - | - |
| Hexachlorocyclopentadiene | 330 | - | - | - | - | - | - |
| 2,4,6-Trichlorophenol | 330 | - | - | - | - | - | - |
| 2,4,5-Trichlorophenol | 1600 | - | - | - | - | - | - |
| 2-Chloronaphthalene | 330 | - | - | - | - | - | - |
| 2-Nitroaniline | 1600 | - | - | - | - | - | - |
| Dimethylphthalate | 330 | - | - | - | - | - | - |
| Acenaphthylene | 330 | - | - | - | - | - | - |
| 2,6-Dinitrotoluene | 330 | - | - | - | - | - | - |

Site: Neptune Drive Disposal Area

Table 3
Summary Table

| SAMPLE LOCATION: | | 09PS910X0201XX | 09PS910X0401XX | 09PS910X0701XX | 09PS911X0201XX | 09PS911X0401XX | 09PS911X0801XX |
|---|---|---|---|---|---|---|---|
| LAB NUMBER: | | 370934 | 370913 | 370927 | 370932 | 370936 | 370938 |
| DATE SAMPLED: | | 09/19/90 | 09/19/90 | 09/19/90 | 09/19/90 | 09/19/90 | 09/19/90 |
| DATE EXTRACTED: | | 09/22/90 | 10/10/90 | 09/22/90 | 09/22/90 | 09/22/90 | 09/22/90 |
| DATE ANALYZED: | | 09/26/90 | 10/12/90 | 09/26/90 | 09/26/90 | 09/26/90 | 09/26/90 |
| ANALYTE | CRQL | | | | | | |
| 3-Nitroaniline | 1600 | - | - | - | - | - | - |
| Acenaphthene | 330 | - | - | - | - | - | - |
| 2,4-Dinitrophenol | 1600 | - | - | - | - | - | - |
| 4-Nitrophenol | 1600 | - | - | - | - | - | - |
| Dibenzofuran | 330 | - | - | - | - | - | - |
| 2,4-Dinitrotoluene | 330 | - | - | - | - | - | - |
| Diethylphthalate | 330 | - | - | - | - | - | - |
| 4-Chlorophenyl-phenylether | 330 | - | - | - | - | - | - |
| Fluorene | 330 | - | - | - | - | - | - |
| 4-Nitroaniline | 1600 | - | - | - | - | - | - |
| 4,6-Dinitro-2-methylphenol | 1600 | - | - | - | - | - | - |
| N-Nitrosodiphenylamine | 330 | - | - | - | - | - | - |
| 4-Bromophenyl-phenylether | 330 | - | - | - | - | - | - |
| Hexachlorobenzene | 330 | - | - | - | - | - | - |
| Pentachlorophenol | 1600 | - | - | - | - | - | - |
| Phenanthrene | 330 | - | - | - | 1100 | - | - |
| Anthracene | 330 | - | - | - | - | - | - |
| Di-n-butylphthalate | 330 | - | - | - | - | - | - |
| Fluoranthene | 330 | - | - | - | 2100 | - | - |
| Pyrene | 330 | - | - | - | 1600 | - | - |
| Butylbenzylphthalate | 330 | - | - | - | - | - | - |
| 3,3'-Dichlorobenzidine | 660 | - | - | - | - | - | - |
| Benzo(a)Anthracene | 330 | - | - | - | 790 | - | - |
| Chrysene | 330 | - | - | - | 840 | - | - |
| bis(2-Ethylhexyl)phthalate | 330 | - | - | - | - | - | - |
| Di-n-octylphthalate | 330 | - | - | - | - | - | - |
| Benzo(b)Fluoranthene | 330 | - | - | - | 480 | - | - |
| Benzo(k)Fluoranthene | 330 | - | - | - | 730 J | - | - |
| Benzo(a)Pyrene | 330 | - | - | - | 570 | - | - |
| Indeno(1,2,3-c,d)Pyrene | 330 | - | - | - | 380 J | - | - |
| Dibenz(a,h)Anthracene | 330 | - | - | - | - | - | - |
| Benzo(g,h,i)perylene | 330 | - | - | - | 470 J | - | - |
| Dilution Factor: | | 1.0 | 1.0 | 1.0 | 1.0 | 1.0 | 1.0 |
| Percent Solids: | | 91 | 93 | 92 | 95 | 92 | 88 |
| Associated Method Blank: | | GH071047A07 | GH073091C05 | GH071047A07 | GH071047A07 | GH071047A07 | GH071047A07 |
| Associated Equipment Blank: | | - | - | - | - | - | - |
| Associated Field Blank: | | - | - | - | - | - | - |

Site: Neptune Drive Disposal Area

Table 3
Summary Table

| SAMPLE LOCATION: | | 09PS903X0101XD | 09PS903X0101XX | 09PS903X0201XX | 09PS903X0601XX | 09PS904X0101XD | 09PS904X0101XX | 09PS904X0301XX | 09PS904X0701XX |
|---|---|---|---|---|---|---|---|---|---|
| LAB NUMBER: | | 370483 | 370454 | 370481 | 370455 | 370475 | 370477 | 370479 | 370472 |
| DATE SAMPLED: | | 09/18/90 | 09/18/90 | 09/18/90 | 09/18/90 | 09/18/90 | 09/18/90 | 09/18/90 | 09/18/90 |
| DATE EXTRACTED: | | 09/20/90 | 09/21/90 | 09/20/90 | 09/20/90 | 09/20/90 | 09/20/90 | 09/20/90 | 09/20/90 |
| DATE ANALYZED: | | 09/27/90 | 09/27/90 | 09/27/90 | 09/26/90 | 09/26/90 | 09/26/90 | 10/03/90 | 09/26/90 |
| ANALYTE | CRQL | | | | | | | | |
| alpha-BHC | 8 | - | - | - | - | - | - | - | - |
| beta-BHC | 8 | - | - | - | - | - | - | - | - |
| delta-BHC | 8 | - | - | - | - | - | - | - | - |
| gamma-BHC (Lindane) | 8 | - | - | - | - | - | - | - | - |
| Heptachlor | 8 | - | - | - | - | - | - | - | - |
| Aldrin | 8 | - | - | - | - | - | - | - | - |
| Heptachlor Epoxide | 8 | - | - | - | - | - | - | - | - |
| Endosulfan I | 8 | - | - | - | - | - | - | - | - |
| Dieldrin | 16 | - | - | - | - | - | - | - | - |
| 4,4'-DDE | 16 | 18 J | - | - | - | 49 J | 20 J | - | - |
| Endrin | 16 | - | - | - | - | - | - | - | - |
| Endosulfan II | 16 | - | - | - | - | - | - | - | - |
| 4,4'-DDD | 16 | - | - | - | - | - | - | - | - |
| Endosulfan Sulfate | 16 | - | - | - | - | - | - | - | - |
| 4,4'-DDT | 16 | 19 | 21 | - | - | 44 J | - | - | - |
| Methoxychlor | 80 | - | - | - | - | - | - | - | - |
| Endrin Ketone | 16 | - | - | - | - | - | - | - | - |
| alpha-Chlordane | 80 | - | - | - | - | - | - | - | - |
| gamma-Chlordane | 80 | - | - | - | - | - | - | - | - |
| Toxaphene | 160 | - | - | - | - | - | - | - | - |
| Aroclor-1016 | 80 | - | - | - | - | - | - | - | - |
| Aroclor-1221 | 80 | - | - | - | - | - | - | - | - |
| Aroclor-1232 | 80 | - | - | - | - | - | - | - | - |
| Aroclor-1242 | 80 | - | - | - | - | - | - | - | - |
| Aroclor-1248 | 80 | - | - | - | - | - | - | - | - |
| Aroclor-1254 | 160 | - | - | - | - | - | - | - | - |
| Aroclor-1260 | 160 | - | - | - | - | - | - | - | - |
| Dilution Factor: | | 1.0 | 1.0 | 1.0 | 1.0 | 1.0 | 1.0 | 1.0 | 1.0 |
| Percent Solids: | | 94 | 94 | 97 | 94 | 88 | 89 | 96 | 92 |
| Associated Method Blank: | | 370731 | 370856 | 370731 | 370731 | 370731 | 370731 | 370731 | 370731 |
| Associated Equipment Blank: | | - | - | - | - | - | - | - | - |
| Associated Field Blank: | | - | - | - | - | - | - | - | - |

Site: Neptune Drive Disposal Area

Table 3
Summary Table

| SAMPLE LOCATION: | | 09PS905X0101XD | 09PS905X0101XX | 09PS905X0301XX | 09PS905X0601XX | 09PS906X0101XX | 09PS906X0301XX | 09PS906X0601XX | 09PS907X0201XX |
|---|---|---|---|---|---|---|---|---|---|
| LAB NUMBER: | | 370445 | 370442 | 370444 | 370443 | 370451 | 370441 | 370452 | 370450 |
| DATE SAMPLED: | | 09/18/90 | 09/18/90 | 09/18/90 | 09/18/90 | 09/19/90 | 09/19/90 | 09/19/90 | 09/19/90 |
| DATE EXTRACTED: | | 09/21/90 | 09/21/90 | 09/21/90 | 09/21/90 | 09/21/90 | 09/21/90 | 09/21/90 | 09/21/90 |
| DATE ANALYZED: | | 09/25/90 | 09/25/90 | 09/25/90 | 09/25/90 | 09/27/90 | 09/25/90 | 09/27/90 | 09/27/90 |
| ANALYTE | CRQL | | | | | | | | |
| alpha-BHC | 8 | - | - | - | - | - | - | - | - |
| beta-BHC | 8 | - | - | - | - | - | - | - | - |
| delta-BHC | 8 | - | - | - | - | - | - | - | - |
| gamma-BHC (Lindane) | 8 | - | - | - | - | - | - | - | - |
| Heptachlor | 8 | - | - | - | - | - | - | - | - |
| Aldrin | 8 | - | - | - | - | - | - | - | - |
| Heptachlor Epoxide | 8 | - | - | - | - | - | - | - | - |
| Endosulfan I | 8 | - | - | - | - | - | - | - | - |
| Dieldrin | 16 | - | - | - | - | - | - | - | - |
| 4,4'-DDE | 16 | - | - | - | - | - | - | - | 35 |
| Endrin | 16 | - | - | - | - | - | - | - | - |
| Endosulfan II | 16 | - | - | - | - | - | - | - | - |
| 4,4'-DDD | 16 | - | - | - | - | - | - | - | - |
| Endosulfan Sulfate | 16 | - | - | - | - | - | - | - | - |
| 4,4'-DDT | 16 | - | - | - | - | - | - | - | 31 |
| Methoxychlor | 80 | - | - | - | - | - | - | - | - |
| Endrin Ketone | 16 | - | - | - | - | - | - | - | - |
| alpha-Chlordane | 80 | - | - | - | - | - | - | - | - |
| gamma-Chlordane | 80 | - | - | - | - | - | - | - | - |
| Toxaphene | 160 | - | - | - | - | - | - | - | - |
| Aroclor-1016 | 80 | - | - | - | - | - | - | - | - |
| Aroclor-1221 | 80 | - | - | - | - | - | - | - | - |
| Aroclor-1232 | 80 | - | - | - | - | - | - | - | - |
| Aroclor-1242 | 80 | - | - | - | - | - | - | - | - |
| Aroclor-1248 | 80 | - | - | - | - | - | - | - | - |
| Aroclor-1254 | 160 | - | - | - | - | - | - | - | - |
| Aroclor-1260 | 160 | - | - | - | - | - | - | - | - |
| Dilution Factor: | | 1.0 | 1.0 | 1.0 | 1.0 | 1.0 | 1.0 | 1.0 | 1.0 |
| Percent Solids: | | 94 | 94 | 97 | 91 | 94 | 96 | 91 | 93 |
| Associated Method Blank: | | 370859 | 370859 | 370859 | 370859 | 370860 | 370859 | 370860 | 370860 |
| Associated Equipment Blank: | | - | - | - | - | - | - | - | - |
| Associated Field Blank: | | - | - | - | - | - | - | - | - |

Site: Neptune Drive Disposal Area

PROJECT: Naval Air Station Brunswick - Round 5 Pesticides/PCBs Soil Analysis (ug/kg) 12/03/90

Table 3
Summary Table

| | SAMPLE LOCATION: | 09PS907X0401XX | 09PS907X0701XX | 09PS908X0101XX | 09PS908X0301XX | 09PS908X0801XX | 09PS909X0101XX | 09PS909X0301XX | 09PS909X0601XX |
|---|---|---|---|---|---|---|---|---|---|
| | LAB NUMBER: | 370446 | 370448 | 370907 | 370922 | 370909 | 370447 | 370449 | 370453 |
| | DATE SAMPLED: | 09/19/90 | 09/19/90 | 09/19/90 | 09/19/90 | 09/19/90 | 09/19/90 | 09/19/90 | 09/19/90 |
| | DATE EXTRACTED: | 09/21/90 | 09/21/90 | 09/22/90 | 09/22/90 | 09/22/90 | 09/21/90 | 09/21/90 | 09/21/90 |
| | DATE ANALYZED: | 09/25/90 | 09/25/90 | 09/25/90 | 09/25/90 | 09/25/90 | 09/25/90 | 09/27/90 | 09/27/90 |
| ANALYTE | CRQL | | | | | | | | |
| alpha-BHC | 8 | - | - | - | - | - | - | - | - |
| beta-BHC | 8 | - | - | - | - | - | - | - | - |
| delta-BHC | 8 | - | - | - | - | - | - | - | - |
| gamma-BHC (Lindane) | 8 | - | - | - | - | - | - | - | - |
| Heptachlor | 8 | - | - | - | - | - | - | - | - |
| Aldrin | 8 | - | - | - | - | - | - | - | - |
| Heptachlor Epoxide | 8 | - | - | - | - | - | - | - | - |
| Endosulfan I | 8 | - | - | - | - | - | - | - | - |
| Dieldrin | 16 | - | - | - | - | - | - | - | - |
| 4,4'-DDE | 16 | - | - | - | - | - | - | - | - |
| Endrin | 16 | - | - | - | - | - | - | - | - |
| Endosulfan II | 16 | - | - | - | - | - | - | - | - |
| 4,4'-DDD | 16 | - | - | - | - | - | - | - | - |
| Endosulfan Sulfate | 16 | - | - | - | - | - | - | - | - |
| 4,4'-DDT | 16 | 28 | - | - | - | - | - | - | - |
| Methoxychlor | 80 | - | - | - | - | - | - | - | - |
| Endrin Ketone | 16 | - | - | - | - | - | - | - | - |
| alpha-Chlordane | 80 | - | - | - | - | - | - | - | - |
| gamma-Chlordane | 80 | - | - | - | - | - | - | - | - |
| Toxaphene | 160 | - | - | - | - | - | - | - | - |
| Aroclor-1016 | 80 | - | - | - | - | - | - | - | - |
| Aroclor-1221 | 80 | - | - | - | - | - | - | - | - |
| Aroclor-1232 | 80 | - | - | - | - | - | - | - | - |
| Aroclor-1242 | 80 | - | - | - | - | - | - | - | - |
| Aroclor-1248 | 80 | - | - | - | - | - | - | - | - |
| Aroclor-1254 | 160 | - | - | - | - | - | - | - | - |
| Aroclor-1260 | 160 | - | - | - | - | - | - | - | - |
| Dilution Factor: | | 1.0 | 1.0 | 1.0 | 1.0 | 1.0 | 1.0 | 1.0 | 1.0 |
| Percent Solids: | | 90 | 78 | 98 | 98 | 79 | 95 | 93 | 77 |
| Associated Method Blank: | | 370860 | 370860 | 371048 | 371047 | 371048 | 370860 | 370860 | 370860 |
| Associated Equipment Blank: | | - | - | - | - | - | - | - | - |
| Associated Field Blank: | | - | - | - | - | - | - | - | - |

Site: Neptune Drive Disposal Area

Table 3
Summary Table

| SAMPLE LOCATION: | | 09PS910X0201XX | 09PS910X0401XX | 09PS910X0701XX | 09PS911X0201XX | 09PS911X0401XX | 09PS911X0801XX |
|---|---|---|---|---|---|---|---|
| LAB NUMBER: | | 370934 | 370913 | 370927 | 370932 | 370936 | 370938 |
| DATE SAMPLED: | | 09/19/90 | 09/19/90 | 09/19/90 | 09/19/90 | 09/19/90 | 09/19/90 |
| DATE EXTRACTED: | | 09/22/90 | 09/22/90 | 09/22/90 | 09/22/90 | 09/22/90 | 09/22/90 |
| DATE ANALYZED: | | 10/04/90 | 09/26/90 | 09/25/90 | 10/04/90 | 10/04/90 | 09/25/90 |
| ANALYTE | CRQL | | | | | | |
| alpha-BHC | 8 | - | - | - | - | - | - |
| beta-BHC | 8 | - | - | - | - | - | - |
| delta-BHC | 8 | - | - | - | - | - | - |
| gamma-BHC (Lindane) | 8 | - | - | - | - | - | - |
| Heptachlor | 8 | - | - | - | - | - | - |
| Aldrin | 8 | - | - | - | - | - | - |
| Heptachlor Epoxide | 8 | - | - | - | - | - | - |
| Endosulfan I | 8 | - | - | - | - | - | - |
| Dieldrin | 16 | - | - | - | - | - | - |
| 4,4'-DDE | 16 | - | - | - | - | 20 | - |
| Endrin | 16 | - | - | - | - | - | - |
| Endosulfan II | 16 | - | - | - | - | - | - |
| 4,4'-DDD | 16 | - | - | - | - | - | - |
| Endosulfan Sulfate | 16 | - | - | - | - | - | - |
| 4,4'-DDT | 16 | - | - | - | 29 | 21 | - |
| Methoxychlor | 80 | - | - | - | - | - | - |
| Endrin Ketone | 16 | - | - | - | - | - | - |
| alpha-Chlordane | 80 | - | - | - | - | - | - |
| gamma-Chlordane | 80 | - | - | - | - | - | - |
| Toxaphene | 160 | - | - | - | - | - | - |
| Aroclor-1016 | 80 | - | - | - | - | - | - |
| Aroclor-1221 | 80 | - | - | - | - | - | - |
| Aroclor-1232 | 80 | - | - | - | - | - | - |
| Aroclor-1242 | 80 | - | - | - | - | - | - |
| Aroclor-1248 | 80 | - | - | - | - | - | - |
| Aroclor-1254 | 160 | - | - | - | - | - | - |
| Aroclor-1260 | 160 | - | - | - | - | - | - |
| Dilution Factor: | | 1.0 | 1.0 | 1.0 | 1.0 | 1.0 | 1.0 |
| Percent Solids: | | 91 | 93 | 92 | 95 | 92 | 88 |
| Associated Method Blank: | | 371047 | 371048 | 371047 | 371047 | 371047 | 371047 |
| Associated Equipment Blank: | | - | - | - | - | - | - |
| Associated Field Blank: | | - | - | - | - | - | - |

Site: Neptune Drive Disposal Area

PROJECT: Naval Air Station Brunswick - Round 5 Inorganic Soil Analysis (mg/kg) 01/14/91

Table 3
Summary Table

| SAMPLE LOCATION: | 09PS903X0101XX | 09PS905X0101XD | 09PS905X0101XX | 09PS905X0301XX | 09PS905X0601XX | 09PS906X0101XX | 09PS906X0301XX | 09PS906X0601XX |
|---|---|---|---|---|---|---|---|---|
| LAB NUMBER: | 370577 | 370551 | 370547 | 370550 | 370549 | 370564 | 370544 | 370567 |
| DATE SAMPLED: | 09/18/90 | 09/18/90 | 09/18/90 | 09/18/90 | 09/18/90 | 09/19/90 | 09/19/90 | 09/19/90 |
| ANALYTE | CRQL | | | | | | | |
| Aluminum | 40 | 7610 | 8700 | 7960 | 5510 | 8280 | 6480 | 7240 | 6390 |
| Antimony | 12 | - | - | - | - | - | - | - | - |
| Arsenic | 2 | - | - | - | - | - | - | - | - |
| Barium | 40 | - | - | - | - | - | - | - | - |
| Beryllium | 1 | - | - | - | - | - | - | - | - |
| Cadmium | 1 | - | - | - | - | - | - | - | - |
| Calcium | 1000 | - | - | - | - | 1170 J | - | - | 1150 J |
| Chromium | 2 | 10.4 | 8.8 | 8.2 | 6.7 | 14.6 | 7.0 | 11.2 | 10.9 |
| Cobalt | 10 | - | - | - | - | - | - | - | - |
| Copper | 5 | - | - | - | - | 10.0 | - | - | - |
| Iron | 20 | 8720 | 8360 | 7970 | 6400 | 10700 | 8110 | 9860 | 9830 |
| Lead | 0.6 | 4.8 J | 4.1 J | 3.6 J | 2.9 J | 3.9 J | 4.9 J | 1.1 J | 2.4 J |
| Magnesium | 1000 | 1950 | 1350 | 1350 | 1560 | 3820 | - | 2900 | 2770 |
| Manganese | 3 | 111 | 69.0 | 70.8 | 80.3 | 150 | 93.5 | 201 | 118 |
| Mercury | 0.1 | - | - | - | - | - | - | - | - |
| Nickel | 8 | - | - | - | - | 10.7 | - | 10.2 | - |
| Potassium | 1000 | - | - | - | - | 2110 | - | 1520 | 1330 |
| Selenium | 1 | R | R | R | R | R | R | R | R |
| Silver | 2 | - | - | - | - | - | - | - | - |
| Sodium | 1000 | - | - | - | - | - | - | - | - |
| Thallium | 2 | - | - | - | - | - | - | - | - |
| Vanadium | 10 | 14.9 | 13.8 | 12.8 | 10.8 | 21.2 | 14.3 | 17.0 | 18.2 |
| Zinc | 4 | 21.1 | 15.6 | 15.1 | 14.6 | 30.3 | 11.6 | 23.2 | 21.4 |
| Cyanide | 1 | - | - | - | - | - | - | - | - |
| Percent Solids: | | 94 | 94 | 94 | 97 | 91 | 94 | 96 | 92 |
| Associated Method Blank: | | BR18551S | BR18551S | BR18551S | BR18551S | BR18551S | BR18551S | BR18551S | BR18551S |
| Associated Equipment Blank: | | - | - | - | - | - | - | - | - |
| Associated Field Blank: | | - | - | - | - | - | - | - | - |

Box Number: 4607-509

PROJECT: Naval Air Station Brunswick - Round 5 | Inorganic Soil Analysis (mg/kg) | 01/11/91

Table 3
Summary Table

SAMPLE LOCATION: 09PS903X0601XX
LAB NUMBER: 370465
DATE SAMPLED: 09/18/90

| ANALYTE | CROL | | |
|---|---|---|---|
| Aluminum | 40 | 6470 | |
| Antimony | 12 | - | |
| Arsenic | 2 | - | |
| Barium | 40 | - | |
| Beryllium | 1 | - | |
| Cadmium | 1 | - | |
| Calcium | 1000 | - | |
| Chromium | 2 | 10.5 | J |
| Cobalt | 10 | - | |
| Copper | 5 | 8.0 | |
| Iron | 20 | 9590 | |
| Lead | 0 .6 | 2.3 | J |
| Magnesium | 1000 | 2710 | |
| Manganese | 3 | 231 | |
| Mercury | 0 .1 | - | |
| Nickel | 8 | 9.4 | |
| Potassium | 1000 | 1440 | |
| Selenium | 1 | - | |
| Silver | 2 | - | |
| Sodium | 1000 | - | |
| Thallium | 2 | | R |
| Vanadium | 10 | 16.9 | |
| Zinc | 4 | 23.7 | J |
| Cyanide | 1 | - | |
| Percent Solids: | | 94 | |

Associated Method Blank: BR18551S2
Associated Equipment Blank: -
Associated Field Blank: -

Box Number: 4607-510

PROJECT: Naval Air Station Brunswick - Round 5 Inorganic Soil Analysis (mg/kg) 01/15/91

Table 3
Summary Tabl

| SAMPLE LOCATION: | 09PS903X0101XD | 09PS903X0201XX | 09PS904X0101XD | 09PS904X0101XX | 09PS904X0301XX | 09PS904X0701XX | 09PS908X0101XX | 09PS908X0301XX |
|---|---|---|---|---|---|---|---|---|
| LAB NUMBER: | 370487 | 370482 | 370476 | 370478 | 370480 | 370474 | 370908 | 370924 |
| DATE SAMPLED: | 09/18/90 | 09/18/90 | 09/18/90 | 09/18/90 | 09/18/90 | 09/18/90 | 09/19/90 | 09/19/90 |
| ANALYTE | CRQL | | | | | | | |
| Aluminum | 40 | 8020 J | 8150 J | 7630 J | 7200 J | 6450 J | 9100 J | 5670 J | 6570 J |
| Antimony | 12 | - | - | - | - | - | - | - | - |
| Arsenic | 2 | - | 3.3 | - | - | - | - | - | 2.2 |
| Barium | 40 | - | - | - | - | - | - | - | - |
| Beryllium | 1 | - | - | - | - | - | - | - | - |
| Cadmium | 1 | - | - | - | - | - | - | - | - |
| Calcium | 1000 | - | - | 1520 | 1290 | - | - | - | - |
| Chromium | 2 | 10.5 | 8.7 | 8.3 | 7.9 | 8.8 | 16.7 | 6.7 | 10.0 |
| Cobalt | 10 | - | - | - | - | - | - | - | - |
| Copper | 5 | - | - | - | - | - | 10.3 J | - | - |
| Iron | 20 | 9060 | 8040 | 7490 | 7420 | 7790 | 13000 | 6450 | 10200 |
| Lead | 0.6 | 11.0 J | 4.9 J | 20.2 J | 11.4 J | 3.0 J | 3.3 J | 2.9 J | 3.0 J |
| Magnesium | 1000 | 2060 | 1460 | 1170 | - | 1910 | 4050 | 1420 | 2870 |
| Manganese | 3 | 122 | 76.7 | 107 | 100 | 116 | 258 | 87.7 J | 139 |
| Mercury | 0.1 | - | - | - | - | - | - | - | - |
| Nickel | 8 | - | - | - | - | - | 13.5 | - | 9.4 |
| Potassium | 1000 | - | - | - | - | - | 2180 | - | 1670 |
| Selenium | 1 | - | - | - | - | - | - | - | - |
| Silver | 2 | - | - | - | - | - | - | - | - |
| Sodium | 1000 | - | - | - | - | - | - | - | - |
| Thallium | 2 | - | - | - | - | - | - | - | - |
| Vanadium | 10 | 16.9 | 12.7 | 14.4 | 12.3 | 13.4 | 23.5 | - | 15.3 |
| Zinc | 4 | 23.3 | 13.9 | 19.5 | 17.4 | 15.6 | 29.6 | 13.2 | 23.2 |
| Cyanide | 1 | - | - | - | - | - | - | - | - |
| Percent Solids: | | 94 | 97 | 88 | 89 | 96 | 92 | 98 | 98 |
| Associated Method Blank: | | BN135888S | BN135888S | BN135888S | BN135888S | BN135888S | BN135888S | BN135888S | BN135888S |
| Associated Equipment Blank: | | - | - | - | - | - | - | - | - |
| Associated Field Blank: | | - | - | - | - | - | - | - | - |

Box Number: 4607-512

Table 3
Summary Table

| SAMPLE LOCATION: | | 09PS907X0201XX | 09PS907X0401XX | 09PS907X0701XX | 09PS909X0101XX | 09PS909X0301XX | 09PS909X0601XX |
|---|---|---|---|---|---|---|---|
| LAB NUMBER: | | 370562 | 370553 | 370560 | 370559 | 370561 | 370572 |
| DATE SAMPLED: | | 09/19/90 | 09/19/90 | 09/19/90 | 09/19/90 | 09/19/90 | 09/19/90 |
| ANALYTE | CRQL | | | | | | |
| Aluminum | 40 | 6790 | 7320 | 9050 | 7760 | 8330 | 9440 |
| Antimony | 12 | - | - | - | - | - | - |
| Arsenic | 2 | - | - | - | - | 6.6 J | - |
| Barium | 40 | - | - | - | - | - | - |
| Beryllium | 1 | - | - | - | - | - | - |
| Cadmium | 1 | - | - | - | - | - | - |
| Calcium | 1000 | - | - | - | - | - | - |
| Chromium | 2 | 6.9 | 8.2 | 16.2 | 8.6 | 15.1 | 17.5 |
| Cobalt | 10 | - | - | - | - | - | - |
| Copper | 5 | - | - | 11.9 | - | 9.8 | - |
| Iron | 20 | 6910 | 9050 | 11700 | 8150 | 15900 | 12000 |
| Lead | 0.6 | 6.7 J | 8.5 J | 3.5 J | 3.6 J | 3.1 J | 4.6 J |
| Magnesium | 1000 | 1250 | 2610 | 4170 | 1260 | 3410 | 4320 |
| Manganese | 3 | 147 | 139 | 168 | 111 | 208 | 158 |
| Mercury | 0.1 | - | - | - | - | - | - |
| Nickel | 8 | - | - | 13.6 | - | 10.8 | 13.1 |
| Potassium | 1000 | - | - | 2220 | - | 1570 | 2450 |
| Selenium | 1 | R | R | R | R | R | R |
| Silver | 2 | - | - | - | - | - | - |
| Sodium | 1000 | - | - | - | - | - | - |
| Thallium | 2 | - | - | - | - | - | - |
| Vanadium | 10 | 11.6 | 16.4 | 23.3 | 14.1 | 23.0 | 24.7 |
| Zinc | 4 | 15.1 | 14.3 | 34.5 | 15.5 | 25.5 | 33.2 |
| Cyanide | 1 | - | - | - | - | - | - |
| Percent Solids: | | 93 | 90 | 78 | 95 | 93 | 77 |
| Associated Method Blank: | | BR18551S | BR18551S | BR18551S | BR18551S | BR18551S | BR18551S |
| Associated Equipment Blank: | | - | - | - | - | - | - |
| Associated Field Blank: | | - | - | - | - | - | - |

Box Number: 4607-509

Table 3
Summary Table

| ANALYTE | CRQL | 09PS908X0801XX | 09PS910X0201XX | 09PS910X0401XX | 09PS910X0701XX | 09PS911X0201XX | 09PS911X0401XX | 09PS911X0801XX |
|---|---|---|---|---|---|---|---|---|
| SAMPLE LOCATION: | | 09PS908X0801XX | 09PS910X0201XX | 09PS910X0401XX | 09PS910X0701XX | 09PS911X0201XX | 09PS911X0401XX | 09PS911X0801XX |
| LAB NUMBER: | | 370911 | 370935 | 370920 | 370929 | 370933 | 370937 | 370939 |
| DATE SAMPLED: | | 09/19/90 | 09/19/90 | 09/19/90 | 09/19/90 | 09/19/90 | 09/19/90 | 09/19/90 |
| Aluminum | 40 | 6820 J | 8310 J | 10200 J | 6890 J | 8300 J | 8750 J | 10200 J |
| Antimony | 12 | - | - | - | - | - | - | - |
| Arsenic | 2 | - | - | - | - | - | - | - |
| Barium | 40 | - | - | - | - | - | - | - |
| Beryllium | 1 | - | - | - | - | - | - | - |
| Cadmium | 1 | - | - | - | - | - | - | - |
| Calcium | 1000 | 1280 | - | - | - | - | - | 1420 |
| Chromium | 2 | 12.9 | 8.7 | 14.0 | 11.1 | 9.0 | 9.2 | 15.8 |
| Cobalt | 10 | - | - | - | - | - | - | - |
| Copper | 5 | 10.4 J | - | 9.1 J | 9.1 J | - | - | 11.8 J |
| Iron | 20 | 9490 | 8390 | 11300 | 10400 | 8860 | 8830 | 13200 |
| Lead | 0.6 | 2.5 J | 8.8 J | 4.9 J | 2.7 J | 3.6 J | 3.8 J | 3.7 J |
| Magnesium | 1000 | 2970 | 1600 | 3020 | 2820 | 1810 | 1690 | 3990 |
| Manganese | 3 | 136 | 116 | 125 | 247 | 104 | 89.1 | 225 |
| Mercury | 0.1 | - | - | - | - | - | - | - |
| Nickel | 8 | 10.6 | - | 11.5 | 9.5 | - | - | 14.0 |
| Potassium | 1000 | 1590 | - | - | 1270 | - | - | 2150 |
| Selenium | 1 | - | - | - | - | - | - | - |
| Silver | 2 | - | - | - | - | - | - | - |
| Sodium | 1000 | - | - | - | - | - | - | - |
| Thallium | 2 | - | - | - | - | - | - | - |
| Vanadium | 10 | 18.4 | 14.8 | 20.7 | 17.9 | 15.3 | 16.2 | 24.7 |
| Zinc | 4 | 25.0 | 16.8 | 23.5 | 22.0 | 18.8 | 15.2 | 28.9 |
| Cyanide | 1 | - | - | - | - | - | - | - |
| Percent Solids: | | 79 | 91 | 93 | 92 | 95 | 92 | 88 |
| Associated Method Blank: | | BN135888S | BN135888S | BN135888S | BN135888S | BN135888S | BN135888S | BN135888S |
| Associated Equipment Blank: | | - | - | - | - | - | - | - |
| Associated Field Blank: | | - | - | - | - | - | - | - |

Box Number: 4607-512

Table 3
Summary Table

| SAMPLE LOCATION: | 11MS304X2201XD | 11MS304X2201XX | 11MS304X3401XX | 11MS304X3801XX | 11PS11010001XX | 11PS11010101XX | 11PS11010501XX | 11PS11020301XX |
|---|---|---|---|---|---|---|---|---|
| LAB NUMBER: | 371657 | 371658R | 371659 | 371660 | 370410 | 370411 * | 370414 | 370412 |
| DATE SAMPLED: | 09/27/90 | 09/27/90 | 09/27/90 | 09/27/90 | 09/18/90 | 09/18/90 | 09/18/90 | 09/17/90 |
| DATE ANALYZED: | 10/04/90 | 10/10/90 | 10/04/90 | 10/04/90 | 09/24/90 | 09/18/90 | 09/26/90 | 09/26/90 |
| ANALYTE | CRQL | | | | | | | |
| Chloromethane | 10 | - | - | - | - | - | - | - |
| Bromomethane | 10 | - | - | - | - | - | - | - |
| Vinyl Chloride | 10 | - | - | - | - | - | - | - |
| Chloroethane | 10 | - | - | - | - | - | - | - |
| Methylene Chloride | 5 | - | - | - | - | - | - | 240 J |
| Acetone | 10 | - | - | - | - | - | - | 900 J |
| Carbon Disulfide | 5 | - | - | - | - | - | - | - |
| 1,1-Dichloroethene | 5 | - | - | - | - | - | - | - |
| 1,1-Dichloroethane | 5 | - | - | - | - | - | - | - |
| 1,2-Dichloroethene (total) | 5 | - | - | - | - | - | - | - |
| Chloroform | 5 | - | - | - | - | - | - | - |
| 1,2-Dichloroethane | 5 | - | - | - | - | - | - | - |
| 2-Butanone | 10 | - | - | - | - | - | 21000 J | - | 260 J |
| 1,1,1-Trichloroethane | 5 | - | - | - | - | - | - | - | - |
| Carbon Tetrachloride | 5 | - | - | - | - | - | - | - | - |
| Vinyl Acetate | 10 | - | - | - | - | - | - | - | - |
| Bromodichloromethane | 5 | - | - | - | - | - | - | - | - |
| 1,2-Dichloropropane | 5 | - | - | - | - | - | - | - | - |
| cis-1,3-Dichloropropene | 5 | - | - | - | - | - | - | - | - |
| Trichloroethene | 5 | - | - | - | - | - | - | - | - |
| Dibromochloromethane | 5 | - | - | - | - | - | - | - | - |
| 1,1,2-Trichloroethane | 5 | - | - | - | - | - | - | - | - |
| Benzene | 5 | - | - | - | - | - | - | - | - |
| trans-1,3-Dichloropropene | 5 | - | - | - | - | - | - | - | - |
| Bromoform | 5 | - | - | - | - | - | - | - | - |
| 4-Methyl-2-Pentanone | 10 | - | - | - | - | - | - | - | - |
| 2-Hexanone | 10 | - | - | - | - | - | - | - | 280 |
| Tetrachloroethene | 5 | - | - | - | - | - | - | - | - |
| 1,1,2,2-Tetrachloroethane | 5 | - | - | - | - | - | - | - | - |
| Toluene | 5 | - | - | - | - | - | - | - | 120 J |
| Chlorobenzene | 5 | - | - | - | - | - | - | - | - |
| Ethylbenzene | 5 | - | - | - | - | - | - | - | 76 J |
| Styrene | 5 | - | - | - | - | - | - | - | - |
| Total Xylenes | 5 | - | - | - | - | - | - | - | 440 J |
| Dilution Factor: | | 1.0 | 1.0 | 1.0 | 1.0 | 1.0 | 4.0 | 1.0 | 5.0 |
| Percent Solids: | | 81 | 80 | 80 | 75 | 85 | 77 | 86 | 74 |
| Associated Method Blank: | | GH072003A13 | GH073101B12 | GH072003A13 | GH072003A13 | GH070536C12 | CN071617C14 | GH070538B12 | GH070852A12 |
| Associated Equipment Blank: | | - | - | - | - | - | - | - | - |
| Associated Field Blank: | | - | - | - | - | - | - | - | - |
| Associated Trip Blank: | | - | - | - | - | - | - | - | - |

Site: Fire Training Area
* = Medium Level Analysis

PROJECT: Naval Air Station Brunswick - Round 5

Volatile Organic Soil Analysis (ug/kg)

12/04/90

Table 3
Summary Table

| SAMPLE LOCATION: | 11PS11020401XX | 11PS11020601XX | 11PS11030101XX | 11PS11030201XX | 11PS11030601XX | 11PS11040101XX | 11PS11040201XX | 11PS11040701XX |
|---|---|---|---|---|---|---|---|---|
| LAB NUMBER: | 370409 | 370417 | 370413 | 370415 | 370416 | 370408 | 370389 | 370407 |
| DATE SAMPLED: | 09/17/90 | 09/17/90 | 09/18/90 | 09/18/90 | 09/18/90 | 09/17/90 | 09/17/90 | 09/17/90 |
| DATE ANALYZED: | 09/21/90 | 09/21/90 | 09/24/90 | 09/21/90 | 09/21/90 | 09/21/90 | 09/21/90 | 09/21/90 |
| ANALYTE | CRQL | | | | | | | |
| Chloromethane | 10 | - | - | - | - | - | - | - |
| Bromomethane | 10 | - | - | - | - | - | - | - |
| Vinyl Chloride | 10 | - | - | - | - | - | - | - |
| Chloroethane | 10 | - | - | - | - | - | - | - |
| Methylene Chloride | 5 | - | - | - | - | - | - | - |
| Acetone | 10 | - | - | 77 J | - | - | - | - |
| Carbon Disulfide | 5 | - | - | - | - | - | - | - |
| 1,1-Dichloroethene | 5 | - | - | - | - | - | - | - |
| 1,1-Dichloroethane | 5 | - | - | - | - | - | - | - |
| 1,2-Dichloroethene (total) | 5 | - | - | - | - | - | - | - |
| Chloroform | 5 | - | - | - | - | - | - | - |
| 1,2-Dichloroethane | 5 | - | - | - | - | - | - | - |
| 2-Butanone | 10 | - | - | - | - | - | - | - |
| 1,1,1-Trichloroethane | 5 | - | 10 | 13 | - | - | - | - |
| Carbon Tetrachloride | 5 | - | - | - | - | - | - | - |
| Vinyl Acetate | 10 | - | - | - | - | - | - | - |
| Bromodichloromethane | 5 | - | - | - | - | - | - | - |
| 1,2-Dichloropropane | 5 | - | - | - | - | - | - | - |
| cis-1,3-Dichloropropene | 5 | - | - | - | - | - | - | - |
| Trichloroethene | 5 | - | - | - | - | - | - | - |
| Dibromochloromethane | 5 | - | - | - | - | - | - | - |
| 1,1,2-Trichloroethane | 5 | - | - | - | - | - | - | - |
| Benzene | 5 | - | - | - | - | - | - | - |
| trans-1,3-Dichloropropene | 5 | - | - | - | - | - | - | - |
| Bromoform | 5 | - | - | - | - | - | - | - |
| 4-Methyl-2-Pentanone | 10 | - | - | - | - | - | - | - |
| 2-Hexanone | 10 | - | 13 | - | - | - | - | - |
| Tetrachloroethene | 5 | - | - | - | - | - | - | - |
| 1,1,2,2-Tetrachloroethane | 5 | - | - | - | - | - | - | - |
| Toluene | 5 | - | 9 | - | - | - | - | - |
| Chlorobenzene | 5 | - | - | - | - | - | - | - |
| Ethylbenzene | 5 | - | - | - | - | - | - | - |
| Styrene | 5 | - | - | - | - | - | - | - |
| Total Xylenes | 5 | - | 19 | - | - | - | - | - |
| Dilution Factor: | | 1.0 | 1.0 | 1.0 | 1.0 | 1.0 | 1.0 | 1.0 |
| Percent Solids: | | 93 | 95 | 86 | 93 | 89 | 98 | 98 | 95 |
| Associated Method Blank: | | GH070535B12 | GH070535B12 | GH070536C12 | GH070535B12 | GH070535B12 | GH070535B12 | GH070535B12 | GH070535B12 |
| Associated Equipment Blank: | | - | - | - | - | - | - | - | - |
| Associated Field Blank: | | - | - | - | - | - | - | - | - |
| Associated Trip Blank: | | - | - | - | - | - | - | - | - |

Site: Fire Training Area
* = Medium Level Analysis

Table 3
Summary Table

| SAMPLE LOCATION: | 11PS11050101XX | 11PS11050201XX | 11PS11050501XX | 11PS11060101XD | 11PS11060101XX | 11PS11060201XX | 11PS11060601XX | 11PS11070201XD |
|---|---|---|---|---|---|---|---|---|
| LAB NUMBER: | 370426 | 370440 | 370430 | 370425 | 370419 | 370418 | 370423 | 370422 |
| DATE SAMPLED: | 09/18/90 | 09/18/90 | 09/18/90 | 09/17/90 | 09/17/90 | 09/17/90 | 09/17/90 | 09/17/90 |
| DATE ANALYZED: | 09/24/90 | 09/24/90 | 09/24/90 | 09/27/90 | 09/27/90 | 09/21/90 | 09/21/90 | 09/24/90 |
| ANALYTE | CRQL | | | | | | | |
| Chloromethane | 10 | - | - | - | - | - | - | - |
| Bromomethane | 10 | - | - | - | - | - | - | - |
| Vinyl Chloride | 10 | - | - | - | - | - | - | - |
| Chloroethane | 10 | - | - | - | - | - | - | - |
| Methylene Chloride | 5 | - | - | - | - | - | - | - |
| Acetone | 10 | - | - | - | - | - | - | 26 J |
| Carbon Disulfide | 5 | - | - | - | - | - | - | - |
| 1,1-Dichloroethene | 5 | - | - | - | - | - | - | - |
| 1,1-Dichloroethane | 5 | - | - | - | - | - | - | - |
| 1,2-Dichloroethene (total) | 5 | - | - | - | - | - | - | - |
| Chloroform | 5 | - | - | - | - | - | - | - |
| 1,2-Dichloroethane | 5 | - | - | - | - | - | - | - |
| 2-Butanone | 10 | - | - | - | - | - | - | - |
| 1,1,1-Trichloroethane | 5 | - | - | - | - | - | - | - |
| Carbon Tetrachloride | 5 | - | - | - | - | - | - | - |
| Vinyl Acetate | 10 | - | - | - | - | - | - | - |
| Bromodichloromethane | 5 | - | - | - | - | - | - | - |
| 1,2-Dichloropropane | 5 | - | - | - | - | - | - | - |
| cis-1,3-Dichloropropene | 5 | - | - | - | - | - | - | - |
| Trichloroethene | 5 | - | - | - | - | - | - | 15 J |
| Dibromochloromethane | 5 | - | - | - | - | - | - | - |
| 1,1,2-Trichloroethane | 5 | - | - | - | - | - | - | - |
| Benzene | 5 | - | - | - | - | - | - | - |
| trans-1,3-Dichloropropene | 5 | - | - | - | - | - | - | - |
| Bromoform | 5 | - | - | - | - | - | - | - |
| 4-Methyl-2-Pentanone | 10 | - | - | - | - | - | - | - |
| 2-Hexanone | 10 | - | - | - | - | - | - | - |
| Tetrachloroethene | 5 | - | - | - | - | - | - | - |
| 1,1,2,2-Tetrachloroethane | 5 | - | - | - | - | - | - | - |
| Toluene | 5 | - | - | - | - | - | - | - |
| Chlorobenzene | 5 | - | - | - | - | - | - | - |
| Ethylbenzene | 5 | - | - | - | - | - | - | - |
| Styrene | 5 | - | - | - | - | - | - | - |
| Total Xylenes | 5 | - | - | - | - | - | - | - |
| Dilution Factor: | | 1.0 | 1.0 | 1.0 | 1.0 | 1.0 | 1.0 | 1.0 |
| Percent Solids: | | 83 | 88 | 94 | 95 | 94 | 89 | 88 | 91 |
| Associated Method Blank: | | GH070846B12 | GH070846B12 | GH070846B12 | GH071630B11 | GH071630B11 | GH070535B12 | GH070846B12 | GH070536C12 |
| Associated Equipment Blank: | | - | - | - | - | - | - | - | - |
| Associated Field Blank: | | - | - | - | - | - | - | - | - |
| Associated Trip Blank: | | - | - | - | - | - | - | - | - |

Site: Fire Training Area
* = Medium Level Analysis

Table 3
Summary Table

| SAMPLE LOCATION: | 11PS11070201XX | 11PS11070501XX | 11PS11070701XX | 11PS11080101XX | 11PS11080201XX | 11PS11080601XX |
|---|---|---|---|---|---|---|
| LAB NUMBER: | 370421 | 370424 | 370420 | 370435 | 370439 | 370438 |
| DATE SAMPLED: | 09/17/90 | 09/17/90 | 09/17/90 | 09/18/90 | 09/18/90 | 09/18/90 |
| DATE ANALYZED: | 09/24/90 | 09/24/90 | 09/21/90 | 09/25/90 | 09/24/90 | 09/24/90 |
| ANALYTE | CRQL | | | | | |
| Chloromethane | 10 | - | - | - | - | - | - |
| Bromomethane | 10 | - | - | - | - | - | - |
| Vinyl Chloride | 10 | - | - | - | - | - | - |
| Chloroethane | 10 | - | - | - | - | - | - |
| Methylene Chloride | 5 | - | - | - | - | - | - |
| Acetone | 10 | - | - | - | - | - | - |
| Carbon Disulfide | 5 | - | - | - | - | - | - |
| 1,1-Dichloroethene | 5 | - | - | - | - | - | - |
| 1,1-Dichloroethane | 5 | - | - | - | - | - | - |
| 1,2-Dichloroethene (total) | 5 | - | - | - | - | - | - |
| Chloroform | 5 | - | - | - | - | - | - |
| 1,2-Dichloroethane | 5 | - | - | - | - | - | - |
| 2-Butanone | 10 | - | - | - | - | - | - |
| 1,1,1-Trichloroethane | 5 | - | - | - | - | - | - |
| Carbon Tetrachloride | 5 | - | - | - | - | - | - |
| Vinyl Acetate | 10 | - | - | - | - | - | - |
| Bromodichloromethane | 5 | - | - | - | - | - | - |
| 1,2-Dichloropropane | 5 | - | - | - | - | - | - |
| cis-1,3-Dichloropropene | 5 | - | - | - | - | - | - |
| Trichloroethene | 5 | 8 J | - | - | - | - | - |
| Dibromochloromethane | 5 | - | - | - | - | - | - |
| 1,1,2-Trichloroethane | 5 | - | - | - | - | - | - |
| Benzene | 5 | - | - | - | - | - | - |
| trans-1,3-Dichloropropene | 5 | - | - | - | - | - | - |
| Bromoform | 5 | - | - | - | - | - | - |
| 4-Methyl-2-Pentanone | 10 | - | - | - | - | - | - |
| 2-Hexanone | 10 | - | - | - | - | - | - |
| Tetrachloroethene | 5 | - | - | - | - | - | - |
| 1,1,2,2-Tetrachloroethane | 5 | - | - | - | - | - | - |
| Toluene | 5 | - | - | - | - | - | - |
| Chlorobenzene | 5 | - | - | - | - | - | - |
| Ethylbenzene | 5 | - | - | - | - | - | - |
| Styrene | 5 | - | - | - | - | - | - |
| Total Xylenes | 5 | - | - | - | - | - | - |
| Dilution Factor: | | 1.0 | 1.0 | 1.0 | 1.0 | 1.0 | 1.0 |
| Percent Solids: | | 92 | 93 | 90 | 90 | 96 | 94 |
| Associated Method Blank: | | GH070536C12 | GH070846B12 | GH070535B12 | GH070846B12 | GH070846B12 | GH070846B12 |
| Associated Equipment Blank: | | - | - | - | - | - | - |
| Associated Field Blank: | | - | - | - | - | - | - |
| Associated Trip Blank: | | - | - | - | - | - | - |

Site: Fire Training Area
* = Medium Level Analysis

Table 3
Summary Table

| SAMPLE LOCATION: | 11MS304X2201XD | 11MS304X2201XX | 11MS304X3401XX | 11MS304X3801XX | 11PS11010001XX | 11PS11010101XX | 11PS11010501XX | 11PS11020301XX | |
|---|---|---|---|---|---|---|---|---|---|
| LAB NUMBER: | 371657 | 371658 | 371659 | 371660 | 370410 | 370411 | 370414 | 370412 | |
| DATE SAMPLED: | 09/27/90 | 09/27/90 | 09/27/90 | 09/27/90 | 09/18/90 | 09/18/90 | 09/18/90 | 09/17/90 | |
| DATE EXTRACTED: | 10/01/90 | 10/01/90 | 10/01/90 | 10/01/90 | 09/21/90 | 09/21/90 | 09/24/90 | 09/22/90 | |
| DATE ANALYZED: | 10/02/90 | 10/02/90 | 10/02/90 | 10/02/90 | 10/01/90 | 09/25/90 | 10/04/90 | 10/09/90 | |
| ANALYTE | CRQL | | | | | | | | |
| Phenol | 330 | - | - | - | - | - | - | - | R |
| bis(2-Chloroethyl)ether | 330 | - | - | - | - | - | - | - | R |
| 2-Chlorophenol | 330 | - | - | - | - | - | - | - | R |
| 1,3-Dichlorobenzene | 330 | - | - | - | - | - | - | - | R |
| 1,4-Dichlorobenzene | 330 | - | - | - | - | - | - | - | R |
| Benzyl Alcohol | 330 | - | - | - | - | - | - | - | R |
| 1,2-Dichlorobenzene | 330 | - | - | - | - | - | - | - | R |
| 2-Methylphenol | 330 | - | - | - | - | - | - | - | R |
| bis(2-Chloroisopropyl)ether | 330 | - | - | - | - | - | - | - | R |
| 4-Methylphenol | 330 | - | - | - | - | - | - | - | R |
| N-Nitroso-di-n-propylamine | 330 | - | - | - | - | - | - | - | R |
| Hexachloroethane | 330 | - | - | - | - | - | - | - | R |
| Nitrobenzene | 330 | - | - | - | - | - | - | - | R |
| Isophorone | 330 | - | - | - | - | - | - | - | R |
| 2-Nitrophenol | 330 | - | - | - | - | - | - | - | R |
| 2,4-Dimethylphenol | 330 | - | - | - | - | - | - | - | R |
| Benzoic Acid | 1600 | - | - | - | - | - | - | - | R |
| bis(2-Chloroethoxy)methane | 330 | - | - | - | - | - | - | - | R |
| 2,4-Dichlorophenol | 330 | - | - | - | - | - | - | - | R |
| 1,2,4-Trichlorobenzene | 330 | - | - | - | - | - | - | - | R |
| Naphthalene | 330 | - | - | - | - | - | - | 2900 | J |
| 4-Chloroaniline | 330 | - | - | - | - | - | - | - | R |
| Hexachlorobutadiene | 330 | - | - | - | - | - | - | - | R |
| 4-Chloro-3-Methylphenol | 330 | - | - | - | - | - | - | - | R |
| 2-Methylnaphthalene | 330 | - | - | - | - | - | - | 11000 | J |
| Hexachlorocyclopentadiene | 330 | - | - | - | - | - | - | - | R |
| 2,4,6-Trichlorophenol | 330 | - | - | - | - | - | - | - | R |
| 2,4,5-Trichlorophenol | 1600 | - | - | - | - | - | - | - | R |
| 2-Chloronaphthalene | 330 | - | - | - | - | - | - | - | R |
| 2-Nitroaniline | 1600 | - | - | - | - | - | - | - | R |
| Dimethylphthalate | 330 | - | - | - | - | - | - | - | R |
| Acenaphthylene | 330 | - | - | - | - | - | - | - | R |
| 2,6-Dinitrotoluene | 330 | - | - | - | - | - | - | - | R |

Site: Fire Training Area

PROJECT: Naval Air Station Brunswick - Round 5 Semivolatile Organic Soil Analysis (ug/kg) 12/04/90

Table 3
Summary Table

| SAMPLE LOCATION: | | 11MS304X2201XD | 11MS304X2201XX | 11MS304X3401XX | 11MS304X3801XX | 11PS11010001XX | 11PS11010101XX | 11PS11010501XX | 11PS11020301XX | |
|---|---|---|---|---|---|---|---|---|---|---|
| LAB NUMBER: | | 371657 | 371658 | 371659 | 371660 | 370410 | 370411 | 370414 | 370412 | |
| DATE SAMPLED: | | 09/27/90 | 09/27/90 | 09/27/90 | 09/27/90 | 09/18/90 | 09/18/90 | 09/18/90 | 09/17/90 | |
| DATE EXTRACTED: | | 10/01/90 | 10/01/90 | 10/01/90 | 10/01/90 | 09/21/90 | 09/21/90 | 09/24/90 | 09/22/90 | |
| DATE ANALYZED: | | 10/02/90 | 10/02/90 | 10/02/90 | 10/02/90 | 10/01/90 | 09/25/90 | 10/04/90 | 10/09/90 | |
| ANALYTE | CRQL | | | | | | | | | |
| 3-Nitroaniline | 1600 | - | - | - | - | - | - | - | | R |
| Acenaphthene | 330 | - | - | - | - | - | - | - | | R |
| 2,4-Dinitrophenol | 1600 | - | - | - | - | - | - | - | | R |
| 4-Nitrophenol | 1600 | - | - | - | - | - | - | - | | R |
| Dibenzofuran | 330 | - | - | - | - | - | - | - | | R |
| 2,4-Dinitrotoluene | 330 | - | - | - | - | - | - | - | | R |
| Diethylphthalate | 330 | - | - | - | - | - | - | - | | R |
| 4-Chlorophenyl-phenylether | 330 | - | - | - | - | - | - | - | | R |
| Fluorene | 330 | - | - | - | - | - | - | - | - | |
| 4-Nitroaniline | 1600 | - | - | - | - | - | - | - | | R |
| 4,6-Dinitro-2-methylphenol | 1600 | - | - | - | - | - | - | - | | R |
| N-Nitrosodiphenylamine | 330 | - | - | - | - | - | - | - | | R |
| 4-Bromophenyl-phenylether | 330 | - | - | - | - | - | - | - | | R |
| Hexachlorobenzene | 330 | - | - | - | - | - | - | - | | R |
| Pentachlorophenol | 1600 | - | - | - | - | - | - | - | | R |
| Phenanthrene | 330 | - | - | - | - | - | 3600 | - | 2800 | J |
| Anthracene | 330 | - | - | - | - | - | - | - | | R |
| Di-n-butylphthalate | 330 | - | - | - | - | - | - | - | - | |
| Fluoranthene | 330 | - | - | - | - | - | - | - | - | |
| Pyrene | 330 | - | - | - | - | - | 3900 | - | 3500 | J |
| Butylbenzylphthalate | 330 | - | - | - | - | - | - | - | | R |
| 3,3'-Dichlorobenzidine | 660 | - | - | - | - | - | - | - | | R |
| Benzo(a)Anthracene | 330 | - | - | - | - | - | - | - | - | |
| Chrysene | 330 | - | - | - | - | - | - | - | 3000 | J |
| bis(2-Ethylhexyl)phthalate | 330 | - | - | - | - | - | - | - | | R |
| Di-n-octylphthalate | 330 | - | - | - | - | - | - | - | | R |
| Benzo(b)Fluoranthene | 330 | - | - | - | - | - | - | - | - | |
| Benzo(k)Fluoranthene | 330 | - | - | - | - | - | - | - | - | |
| Benzo(a)Pyrene | 330 | - | - | - | - | - | - | - | - | |
| Indeno(1,2,3-c,d)Pyrene | 330 | - | - | - | - | - | - | - | | R |
| Dibenz(a,h)Anthracene | 330 | - | - | - | - | - | - | - | | R |
| Benzo(g,h,i)perylene | 330 | - | - | - | - | - | - | - | - | |
| Dilution Factor: | | 1.0 | 1.0 | 1.0 | 1.0 | 5.0 | 6.8 | 10 | 5.0 | |
| Percent Solids: | | 81 | 80 | 80 | 75 | 85 | 77 | 86 | 74 | |
| Associated Method Blank: | | GH071984A04 | GH071984A04 | GH071984A04 | GH071984A04 | GH070975C20 | GH070975C20 | GH071207B20 | GJ071048A20 | |
| Associated Equipment Blank: | | - | - | - | - | - | - | - | - | |
| Associated Field Blank: | | - | - | - | - | - | - | - | - | |

Site: Fire Training Area

Table 3
Summary Table

| | | | | | | | | | |
|---|---|---|---|---|---|---|---|---|---|
| | SAMPLE LOCATION: | 11PS11020401XX | 11PS11020601XX | 11PS11030101XX | 11PS11030201XX | 11PS11030601XX | 11PS11040101XX | 11PS11040201XX | 11PS11040701XX |
| | LAB NUMBER: | 370409 | 370417 | 370413 | 370415 | 370416 | 370408 | 370389 | 370407 |
| | DATE SAMPLED: | 09/17/90 | 09/17/90 | 09/18/90 | 09/18/90 | 09/18/90 | 09/17/90 | 09/17/90 | 09/17/90 |
| | DATE EXTRACTED: | 09/21/90 | 09/21/90 | 09/21/90 | 09/21/90 | 09/21/90 | 09/21/90 | 09/21/90 | 09/21/90 |
| | DATE ANALYZED: | 09/25/90 | 10/01/90 | 10/01/90 | 09/25/90 | 09/25/90 | 09/25/90 | 09/25/90 | 09/25/90 |
| ANALYTE | CRQL | | | | | | | | |
| Phenol | 330 | - | - | - | - | - | - | - | - |
| bis(2-Chloroethyl)ether | 330 | - | - | - | - | - | - | - | - |
| 2-Chlorophenol | 330 | - | - | - | - | - | - | - | - |
| 1,3-Dichlorobenzene | 330 | - | - | - | - | - | - | - | - |
| 1,4-Dichlorobenzene | 330 | - | - | - | - | - | - | - | - |
| Benzyl Alcohol | 330 | - | - | - | - | - | - | - | - |
| 1,2-Dichlorobenzene | 330 | - | - | - | - | - | - | - | - |
| 2-Methylphenol | 330 | - | - | - | - | - | - | - | - |
| bis(2-Chloroisopropyl)ether | 330 | - | - | - | - | - | - | - | - |
| 4-Methylphenol | 330 | - | - | - | - | - | - | - | - |
| N-Nitroso-di-n-propylamine | 330 | - | - | - | - | - | - | - | - |
| Hexachloroethane | 330 | - | - | - | - | - | - | - | - |
| Nitrobenzene | 330 | - | - | - | - | - | - | - | - |
| Isophorone | 330 | - | - | - | - | - | - | - | - |
| 2-Nitrophenol | 330 | - | - | - | - | - | - | - | - |
| 2,4-Dimethylphenol | 330 | - | - | - | - | - | - | - | - |
| Benzoic Acid | 1600 | - | - | - | - | - | - | - | - |
| bis(2-Chloroethoxy)methane | 330 | - | - | - | - | - | - | - | - |
| 2,4-Dichlorophenol | 330 | - | - | - | - | - | - | - | - |
| 1,2,4-Trichlorobenzene | 330 | - | - | - | - | - | - | - | - |
| Naphthalene | 330 | - | - | - | - | - | - | - | - |
| 4-Chloroaniline | 330 | - | - | - | - | - | - | - | - |
| Hexachlorobutadiene | 330 | - | - | - | - | - | - | - | - |
| 4-Chloro-3-Methylphenol | 330 | - | - | - | - | - | - | - | - |
| 2-Methylnaphthalene | 330 | - | - | - | - | - | - | - | - |
| Hexachlorocyclopentadiene | 330 | - | - | - | - | - | - | - | - |
| 2,4,6-Trichlorophenol | 330 | - | - | - | - | - | - | - | - |
| 2,4,5-Trichlorophenol | 1600 | - | - | - | - | - | - | - | - |
| 2-Chloronaphthalene | 330 | - | - | - | - | - | - | - | - |
| 2-Nitroaniline | 1600 | - | - | - | - | - | - | - | - |
| Dimethylphthalate | 330 | - | - | - | - | - | - | - | - |
| Acenaphthylene | 330 | - | - | - | - | - | - | - | - |
| 2,6-Dinitrotoluene | 330 | - | - | - | - | - | - | - | - |

Site: Fire Training Area

Table 3
Summary Table

| SAMPLE LOCATION: | 11PS11020401XX | 11PS11020601XX | 11PS11030101XX | 11PS11030201XX | 11PS11030601XX | 11PS11040101XX | 11PS11040201XX | 11PS11040701XX |
|---|---|---|---|---|---|---|---|---|
| LAB NUMBER: | 370409 | 370417 | 370413 | 370415 | 370416 | 370408 | 370389 | 370407 |
| DATE SAMPLED: | 09/17/90 | 09/17/90 | 09/18/90 | 09/18/90 | 09/18/90 | 09/17/90 | 09/17/90 | 09/17/90 |
| DATE EXTRACTED: | 09/21/90 | 09/21/90 | 09/21/90 | 09/21/90 | 09/21/90 | 09/21/90 | 09/21/90 | 09/21/90 |
| DATE ANALYZED: | 09/25/90 | 10/01/90 | 10/01/90 | 09/25/90 | 09/25/90 | 09/25/90 | 09/25/90 | 09/25/90 |
| ANALYTE | CRQL | | | | | | | |
| 3-Nitroaniline | 1600 | - | - | - | - | - | - | - |
| Acenaphthene | 330 | - | - | - | - | - | - | - |
| 2,4-Dinitrophenol | 1600 | - | - | - | - | - | - | - |
| 4-Nitrophenol | 1600 | - | - | - | - | - | - | - |
| Dibenzofuran | 330 | - | - | - | - | - | - | - |
| 2,4-Dinitrotoluene | 330 | - | - | - | - | - | - | - |
| Diethylphthalate | 330 | - | - | - | - | - | - | - |
| 4-Chlorophenyl-phenylether | 330 | - | - | - | - | - | - | - |
| Fluorene | 330 | - | - | - | - | - | - | - |
| 4-Nitroaniline | 1600 | - | - | - | - | - | - | - |
| 4,6-Dinitro-2-methylphenol | 1600 | - | - | - | - | - | - | - |
| N-Nitrosodiphenylamine | 330 | - | - | - | - | - | - | - |
| 4-Bromophenyl-phenylether | 330 | - | - | - | - | - | - | - |
| Hexachlorobenzene | 330 | - | - | - | - | - | - | - |
| Pentachlorophenol | 1600 | - | - | - | - | - | - | - |
| Phenanthrene | 330 | - | 2100 | - | - | - | - | - |
| Anthracene | 330 | - | - | - | - | - | - | - |
| Di-n-butylphthalate | 330 | - | - | - | - | - | - | - |
| Fluoranthene | 330 | - | - | - | - | - | - | - |
| Pyrene | 330 | - | - | - | - | - | - | - |
| Butylbenzylphthalate | 330 | - | - | - | - | - | - | - |
| 3,3'-Dichlorobenzidine | 660 | - | - | - | - | - | - | - |
| Benzo(a)Anthracene | 330 | - | - | - | - | - | - | - |
| Chrysene | 330 | - | - | - | - | - | - | - |
| bis(2-Ethylhexyl)phthalate | 330 | - | - | - | - | - | - | - |
| Di-n-octylphthalate | 330 | - | - | - | - | - | - | - |
| Benzo(b)Fluoranthene | 330 | - | - | - | - | - | - | - |
| Benzo(k)Fluoranthene | 330 | - | - | - | - | - | - | - |
| Benzo(a)Pyrene | 330 | - | - | - | - | - | - | - |
| Indeno(1,2,3-c,d)Pyrene | 330 | - | - | - | - | - | - | - |
| Dibenz(a,h)Anthracene | 330 | - | - | - | - | - | - | - |
| Benzo(g,h,i)perylene | 330 | - | - | - | - | - | - | - |
| Dilution Factor: | | 1.0 | 5.0 | 10 | 15 | 1.0 | 1.0 | 1.0 |
| Percent Solids: | | 93 | 95 | 86 | 93 | 89 | 98 | 98 | 95 |
| Associated Method Blank: | | GH070975C20 | GH070975C20 | GH070975C20 | GH070975C20 | GH070975C20 | GH070910C22 | GH070910C22 | GH070910C22 |
| Associated Equipment Blank: | | - | - | - | - | - | - | - | - |
| Associated Field Blank: | | - | - | - | - | - | - | - | - |

Site: Fire Training Area

Table 3
Summary Table

| SAMPLE LOCATION: | | 11PS11050101XX | 11PS11050201XX | 11PS11050501XX | 11PS11060101XD | 11PS11060101XX | 11PS11060201XX | 11PS11060601XX | 11PS11070201XD |
|---|---|---|---|---|---|---|---|---|---|
| LAB NUMBER: | | 370426 | 370440 | 370430 | 370425 | 370419 | 370418 | 370423 | 370422 |
| DATE SAMPLED: | | 09/18/90 | 09/18/90 | 09/18/90 | 09/17/90 | 09/17/90 | 09/17/90 | 09/17/90 | 09/17/90 |
| DATE EXTRACTED: | | 09/21/90 | 09/21/90 | 09/21/90 | 09/21/90 | 09/21/90 | 09/21/90 | 09/21/90 | 09/21/90 |
| DATE ANALYZED: | | 09/25/90 | 09/24/90 | 09/25/90 | 09/27/90 | 09/27/90 | 09/26/90 | 09/26/90 | 09/27/90 |
| ANALYTE | CRQL | | | | | | | | |
| Phenol | 330 | - | - | - | - | - | - | - | - |
| bis(2-Chloroethyl)ether | 330 | - | - | - | - | - | - | - | - |
| 2-Chlorophenol | 330 | - | - | - | - | - | - | - | - |
| 1,3-Dichlorobenzene | 330 | - | - | - | - | - | - | - | - |
| 1,4-Dichlorobenzene | 330 | - | - | - | - | - | - | - | - |
| Benzyl Alcohol | 330 | - | - | - | - | - | - | - | - |
| 1,2-Dichlorobenzene | 330 | - | - | - | - | - | - | - | - |
| 2-Methylphenol | 330 | - | - | - | - | - | - | - | - |
| bis(2-Chloroisopropyl)ether | 330 | - | - | - | - | - | - | - | - |
| 4-Methylphenol | 330 | - | - | - | - | - | - | - | - |
| N-Nitroso-di-n-propylamine | 330 | - | - | - | - | - | - | - | - |
| Hexachloroethane | 330 | - | - | - | - | - | - | - | - |
| Nitrobenzene | 330 | - | - | - | - | - | - | - | - |
| Isophorone | 330 | - | - | - | - | - | - | - | - |
| 2-Nitrophenol | 330 | - | - | - | - | - | - | - | - |
| 2,4-Dimethylphenol | 330 | - | - | - | - | - | - | - | - |
| Benzoic Acid | 1600 | - | - | - | - | - | - | - | - |
| bis(2-Chloroethoxy)methane | 330 | - | - | - | - | - | - | - | - |
| 2,4-Dichlorophenol | 330 | - | - | - | - | - | - | - | - |
| 1,2,4-Trichlorobenzene | 330 | - | - | - | - | - | - | - | - |
| Naphthalene | 330 | - | - | - | - | - | - | - | - |
| 4-Chloroaniline | 330 | - | - | - | - | - | - | - | - |
| Hexachlorobutadiene | 330 | - | - | - | - | - | - | - | - |
| 4-Chloro-3-Methylphenol | 330 | - | - | - | - | - | - | - | - |
| 2-Methylnaphthalene | 330 | - | - | - | - | - | - | - | - |
| Hexachlorocyclopentadiene | 330 | - | - | - | - | - | - | - | - |
| 2,4,6-Trichlorophenol | 330 | - | - | - | - | - | - | - | - |
| 2,4,5-Trichlorophenol | 1600 | - | - | - | - | - | - | - | - |
| 2-Chloronaphthalene | 330 | - | - | - | - | - | - | - | - |
| 2-Nitroaniline | 1600 | - | - | - | - | - | - | - | - |
| Dimethylphthalate | 330 | - | - | - | - | - | - | - | - |
| Acenaphthylene | 330 | - | - | - | - | - | - | - | - |
| 2,6-Dinitrotoluene | 330 | - | - | - | - | - | - | - | - |

Site: Fire Training Area

Table 3
Summary Table

| SAMPLE LOCATION: | | 11PS11050101XX | 11PS11050201XX | 11PS11050501XX | 11PS11060101XD | 11PS11060101XX | 11PS11060201XX | 11PS11060601XX | 11PS11070201XD |
|---|---|---|---|---|---|---|---|---|---|
| LAB NUMBER: | | 370426 | 370440 | 370430 | 370425 | 370419 | 370418 | 370423 | 370422 |
| DATE SAMPLED: | | 09/18/90 | 09/18/90 | 09/18/90 | 09/17/90 | 09/17/90 | 09/17/90 | 09/17/90 | 09/17/90 |
| DATE EXTRACTED: | | 09/21/90 | 09/21/90 | 09/21/90 | 09/21/90 | 09/21/90 | 09/21/90 | 09/21/90 | 09/21/90 |
| DATE ANALYZED: | | 09/25/90 | 09/24/90 | 09/25/90 | 09/27/90 | 09/27/90 | 09/26/90 | 09/26/90 | 09/27/90 |
| ANALYTE | CRQL | | | | | | | | |
| 3-Nitroaniline | 1600 | - | - | - | - | - | - | - | - |
| Acenaphthene | 330 | - | - | - | - | - | - | - | - |
| 2,4-Dinitrophenol | 1600 | - | - | - | - | - | - | - | - |
| 4-Nitrophenol | 1600 | - | - | - | - | - | - | - | - |
| Dibenzofuran | 330 | - | - | - | - | - | - | - | - |
| 2,4-Dinitrotoluene | 330 | - | - | - | - | - | - | - | - |
| Diethylphthalate | 330 | - | - | - | - | - | - | - | - |
| 4-Chlorophenyl-phenylether | 330 | - | - | - | - | - | - | - | - |
| Fluorene | 330 | - | - | - | - | - | - | - | - |
| 4-Nitroaniline | 1600 | - | - | - | - | - | - | - | - |
| 4,6-Dinitro-2-methylphenol | 1600 | - | - | - | - | - | - | - | - |
| N-Nitrosodiphenylamine | 330 | - | - | - | - | - | - | - | - |
| 4-Bromophenyl-phenylether | 330 | - | - | - | - | - | - | - | - |
| Hexachlorobenzene | 330 | - | - | - | - | - | - | - | - |
| Pentachlorophenol | 1600 | - | - | - | - | - | - | - | - |
| Phenanthrene | 330 | - | - | - | - | - | - | - | - |
| Anthracene | 330 | - | - | - | - | - | - | - | - |
| Di-n-butylphthalate | 330 | - | - | - | - | - | - | - | - |
| Fluoranthene | 330 | - | - | - | - | 970 J | - | - | - |
| Pyrene | 330 | - | - | - | - | - | - | - | - |
| Butylbenzylphthalate | 330 | - | - | - | - | - | - | - | - |
| 3,3'-Dichlorobenzidine | 660 | - | - | - | - | - | - | - | - |
| Benzo(a)Anthracene | 330 | - | - | - | - | - | - | - | - |
| Chrysene | 330 | - | - | - | - | - | - | - | - |
| bis(2-Ethylhexyl)phthalate | 330 | - | - | - | 8400 | 8900 | - | - | - |
| Di-n-octylphthalate | 330 | - | - | - | - | - | - | - | - |
| Benzo(b)Fluoranthene | 330 | - | - | - | - | 940 JX | - | - | - |
| Benzo(k)Fluoranthene | 330 | - | - | - | - | 940 JX | - | - | - |
| Benzo(a)Pyrene | 330 | - | - | - | - | - | - | - | - |
| Indeno(1,2,3-c,d)Pyrene | 330 | - | - | - | - | - | - | - | - |
| Dibenz(a,h)Anthracene | 330 | - | - | - | - | - | - | - | - |
| Benzo(g,h,i)perylene | 330 | - | - | - | - | - | - | - | - |
| Dilution Factor: | | 1.0 | 1.0 | 1.0 | 5.0 | 2.0 | 1.0 | 1.0 | 1.0 |
| Percent Solids: | | 83 | 88 | 94 | 95 | 94 | 89 | 88 | 91 |
| Associated Method Blank: | | GH070856C20 | GH070859C20 | GH070856C20 | G2J71017A20 | G2J71017A20 | G2J71017A20 | G2J71017A20 | G2J71017A20 |
| Associated Equipment Blank: | | - | - | - | - | - | - | - | - |
| Associated Field Blank: | | - | - | - | - | - | - | - | - |

Site: Fire Training Area

Table 3
Summary Table

| SAMPLE LOCATION: | | 11PS11070201XX | 11PS11070501XX | 11PS11070701XX | 11PS11080101XX | 11PS11080201XX | 11PS11080601XX |
|---|---|---|---|---|---|---|---|
| LAB NUMBER: | | 370421 | 370424 | 370420 | 370435 | 370439 | 370438 |
| DATE SAMPLED: | | 09/17/90 | 09/17/90 | 09/17/90 | 09/18/90 | 09/18/90 | 09/18/90 |
| DATE EXTRACTED: | | 09/21/90 | 09/21/90 | 09/21/90 | 09/21/90 | 09/21/90 | 09/21/90 |
| DATE ANALYZED: | | 09/25/90 | 09/27/90 | 09/26/90 | 09/25/90 | 09/24/90 | 09/24/90 |
| ANALYTE | CRQL | | | | | | |
| Phenol | 330 | - | - | - | - | - | - |
| bis(2-Chloroethyl)ether | 330 | - | - | - | - | - | - |
| 2-Chlorophenol | 330 | - | - | - | - | - | - |
| 1,3-Dichlorobenzene | 330 | - | - | - | - | - | - |
| 1,4-Dichlorobenzene | 330 | - | - | - | - | - | - |
| Benzyl Alcohol | 330 | - | - | - | - | - | - |
| 1,2-Dichlorobenzene | 330 | - | - | - | - | - | - |
| 2-Methylphenol | 330 | - | - | - | - | - | - |
| bis(2-Chloroisopropyl)ether | 330 | - | - | - | - | - | - |
| 4-Methylphenol | 330 | - | - | - | - | - | - |
| N-Nitroso-di-n-propylamine | 330 | - | - | - | - | - | - |
| Hexachloroethane | 330 | - | - | - | - | - | - |
| Nitrobenzene | 330 | - | - | - | - | - | - |
| Isophorone | 330 | - | - | - | - | - | - |
| 2-Nitrophenol | 330 | - | - | - | - | - | - |
| 2,4-Dimethylphenol | 330 | - | - | - | - | - | - |
| Benzoic Acid | 1600 | - | - | - | - | - | - |
| bis(2-Chloroethoxy)methane | 330 | - | - | - | - | - | - |
| 2,4-Dichlorophenol | 330 | - | - | - | - | - | - |
| 1,2,4-Trichlorobenzene | 330 | - | - | - | - | - | - |
| Naphthalene | 330 | - | - | - | - | - | - |
| 4-Chloroaniline | 330 | - | - | - | - | - | - |
| Hexachlorobutadiene | 330 | - | - | - | - | - | - |
| 4-Chloro-3-Methylphenol | 330 | - | - | - | - | - | - |
| 2-Methylnaphthalene | 330 | - | - | - | - | - | - |
| Hexachlorocyclopentadiene | 330 | - | - | - | - | - | - |
| 2,4,6-Trichlorophenol | 330 | - | - | - | - | - | - |
| 2,4,5-Trichlorophenol | 1600 | - | - | - | - | - | - |
| 2-Chloronaphthalene | 330 | - | - | - | - | - | - |
| 2-Nitroaniline | 1600 | - | - | - | - | - | - |
| Dimethylphthalate | 330 | - | - | - | - | - | - |
| Acenaphthylene | 330 | - | - | - | - | - | - |
| 2,6-Dinitrotoluene | 330 | - | - | - | - | - | - |

Site: Fire Training Area

Table 3
Summary Table

| SAMPLE LOCATION: | | 11PS11070201XX | 11PS11070501XX | 11PS11070701XX | 11PS11080101XX | 11PS11080201XX | 11PS11080601XX |
|---|---|---|---|---|---|---|---|
| LAB NUMBER: | | 370421 | 370424 | 370420 | 370435 | 370439 | 370438 |
| DATE SAMPLED: | | 09/17/90 | 09/17/90 | 09/17/90 | 09/18/90 | 09/18/90 | 09/18/90 |
| DATE EXTRACTED: | | 09/21/90 | 09/21/90 | 09/21/90 | 09/21/90 | 09/21/90 | 09/21/90 |
| DATE ANALYZED: | | 09/25/90 | 09/27/90 | 09/26/90 | 09/25/90 | 09/24/90 | 09/24/90 |
| ANALYTE | CRQL | | | | | | |
| 3-Nitroaniline | 1600 | - | - | - | - | - | - |
| Acenaphthene | 330 | - | - | - | - | - | - |
| 2,4-Dinitrophenol | 1600 | - | - | - | - | - | - |
| 4-Nitrophenol | 1600 | - | - | - | - | - | - |
| Dibenzofuran | 330 | - | - | - | - | - | - |
| 2,4-Dinitrotoluene | 330 | - | - | - | - | - | - |
| Diethylphthalate | 330 | - | - | - | - | - | - |
| 4-Chlorophenyl-phenylether | 330 | - | - | - | - | - | - |
| Fluorene | 330 | - | - | - | - | - | - |
| 4-Nitroaniline | 1600 | - | - | - | - | - | - |
| 4,6-Dinitro-2-methylphenol | 1600 | - | - | - | - | - | - |
| N-Nitrosodiphenylamine | 330 | - | - | - | - | - | - |
| 4-Bromophenyl-phenylether | 330 | - | - | - | - | - | - |
| Hexachlorobenzene | 330 | - | - | - | - | - | - |
| Pentachlorophenol | 1600 | - | - | - | - | - | - |
| Phenanthrene | 330 | - | - | - | - | - | - |
| Anthracene | 330 | - | - | - | - | - | - |
| Di-n-butylphthalate | 330 | - | - | - | - | - | - |
| Fluoranthene | 330 | - | - | - | - | - | - |
| Pyrene | 330 | - | - | - | - | - | - |
| Butylbenzylphthalate | 330 | - | - | - | - | - | - |
| 3,3'-Dichlorobenzidine | 660 | - | - | - | - | - | - |
| Benzo(a)Anthracene | 330 | - | - | - | - | - | - |
| Chrysene | 330 | - | - | - | - | - | - |
| bis(2-Ethylhexyl)phthalate | 330 | - | - | - | - | - | - |
| Di-n-octylphthalate | 330 | - | - | - | - | - | - |
| Benzo(b)Fluoranthene | 330 | - | - | - | - | - | - |
| Benzo(k)Fluoranthene | 330 | - | - | - | - | - | - |
| Benzo(a)Pyrene | 330 | - | - | - | - | - | - |
| Indeno(1,2,3-c,d)Pyrene | 330 | - | - | - | - | - | - |
| Dibenz(a,h)Anthracene | 330 | - | - | - | - | - | - |
| Benzo(g,h,i)perylene | 330 | - | - | - | - | - | - |
| Dilution Factor: | | 1.0 | 1.0 | 1.0 | 1.0 | 1.0 | 1.0 |
| Percent Solids: | | 92 | 93 | 90 | 90 | 96 | 94 |
| Associated Method Blank: | | GH070910C22 | G2J71017A20 | G2J71017A20 | GH070856C20 | GH070859C20 | GH070859C20 |
| Associated Equipment Blank: | | - | - | - | - | - | - |
| Associated Field Blank: | | - | - | - | - | - | - |

Site: Fire Training Area

Table 3
Summary Table

| SAMPLE LOCATION: | | 11MS304X2201XD | 11MS304X2201XX | 11MS304X3401XX | 11MS304X3801XX | 11PS11010001XX | 11PS11010101XX | 11PS11010501XX | 11PS11020301XX |
|---|---|---|---|---|---|---|---|---|---|
| LAB NUMBER: | | 371657 | 371658 | 371659 | 371660 | 370410 | 370411 | 370414 | 370412 |
| DATE SAMPLED: | | 09/27/90 | 09/27/90 | 09/27/90 | 09/27/90 | 09/18/90 | 09/18/90 | 09/18/90 | 09/17/90 |
| DATE EXTRACTED: | | 10/05/90 | 10/05/90 | 10/05/90 | 10/05/90 | 09/21/90 | 09/21/90 | 09/21/90 | 09/22/90 |
| DATE ANALYZED: | | 10/06/90 | 10/06/90 | 10/06/90 | 10/11/90 | 10/12/90 | 10/12/90 | 10/16/90 | 09/25/90 |
| ANALYTE | CRQL | | | | | | | | |
| alpha-BHC | 8 | - | - | - | - | - | - | - | - |
| beta-BHC | 8 | - | - | - | - | - | - | - | - |
| delta-BHC | 8 | - | - | - | - | - | - | - | - |
| gamma-BHC (Lindane) | 8 | - | - | - | - | - | - | - | - |
| Heptachlor | 8 | - | - | - | - | - | 59 | - | - |
| Aldrin | 8 | - | - | - | - | - | - | - | - |
| Heptachlor Epoxide | 8 | - | - | - | - | - | - | - | - |
| Endosulfan I | 8 | - | - | - | - | - | - | - | - |
| Dieldrin | 16 | - | - | - | - | - | - | - | - |
| 4,4'-DDE | 16 | - | - | - | - | - | - | - | - |
| Endrin | 16 | - | - | - | - | - | - | - | - |
| Endosulfan II | 16 | - | - | - | - | - | 34 | - | - |
| 4,4'-DDD | 16 | - | - | - | - | - | - | - | - |
| Endosulfan Sulfate | 16 | - | - | - | - | - | - | - | - |
| 4,4'-DDT | 16 | - | - | - | - | - | - | - | - |
| Methoxychlor | 80 | - | - | - | - | - | - | - | - |
| Endrin Ketone | 16 | - | - | - | - | - | - | - | - |
| alpha-Chlordane | 80 | - | - | - | - | - | - | - | - |
| gamma-Chlordane | 80 | - | - | - | - | - | - | - | - |
| Toxaphene | 160 | - | - | - | - | - | - | - | - |
| Aroclor-1016 | 80 | - | - | - | - | - | - | - | - |
| Aroclor-1221 | 80 | - | - | - | - | - | - | - | - |
| Aroclor-1232 | 80 | - | - | - | - | - | - | - | - |
| Aroclor-1242 | 80 | - | - | - | - | - | - | - | - |
| Aroclor-1248 | 80 | - | - | - | - | - | - | - | - |
| Aroclor-1254 | 160 | - | - | - | - | - | - | - | - |
| Aroclor-1260 | 160 | - | - | - | - | - | - | - | - |
| Dilution Factor: | | 1.0 | 1.0 | 1.0 | 1.0 | 1.0 | 1.0 | 1.0 | 1.0 |
| Percent Solids: | | 81 | 80 | 80 | 75 | 85 | 77 | 86 | 74 |
| Associated Method Blank: | | 372592 | 372592 | 372592 | 372592 | 370975 | 370975 | 370975 | 371048 |
| Associated Equipment Blank: | | - | - | - | - | - | - | - | - |
| Associated Field Blank: | | - | - | - | - | - | - | - | - |

Site: Fire Training Area

PROJECT: Naval Air Station Brunswick - Round 5 Pesticides/PCBs Soil Analysis (ug/kg) 12/04/90

Table 3
Summary Table

| SAMPLE LOCATION: | | 11PS11020401XX | 11PS11020601XX | 11PS11030101XX | 11PS11030201XX | 11PS11030601XX | 11PS11040101XX | 11PS11040201XX | 11PS11040701XX |
|---|---|---|---|---|---|---|---|---|---|
| LAB NUMBER: | | 370409 | 370417 | 370413 | 370415 | 370416 | 370408 | 370389 | 370407 |
| DATE SAMPLED: | | 09/17/90 | 09/17/90 | 09/18/90 | 09/18/90 | 09/18/90 | 09/17/90 | 09/17/90 | 09/17/90 |
| DATE EXTRACTED: | | 09/21/90 | 09/21/90 | 09/21/90 | 09/21/90 | 09/21/90 | 09/21/90 | 09/21/90 | 09/21/90 |
| DATE ANALYZED: | | 10/12/90 | 10/12/90 | 10/12/90 | 10/12/90 | 10/17/90 | 10/04/90 | 09/27/90 | 09/27/90 |
| ANALYTE | CRQL | | | | | | | | |
| alpha-BHC | 8 | - | - | - | - | - | - | - | - |
| beta-BHC | 8 | - | - | - | - | - | - | - | - |
| delta-BHC | 8 | - | - | - | - | - | - | - | - |
| gamma-BHC (Lindane) | 8 | - | 38 | - | - | - | - | - | - |
| Heptachlor | 8 | - | - | - | - | - | - | - | - |
| Aldrin | 8 | - | - | - | - | - | - | - | - |
| Heptachlor Epoxide | 8 | - | - | - | - | - | - | - | - |
| Endosulfan I | 8 | - | - | - | - | - | - | - | - |
| Dieldrin | 16 | - | - | - | - | - | - | - | - |
| 4,4'-DDE | 16 | - | - | - | - | - | - | - | - |
| Endrin | 16 | - | - | - | - | - | - | - | - |
| Endosulfan II | 16 | - | - | - | - | - | - | - | - |
| 4,4'-DDD | 16 | - | - | - | - | - | - | - | - |
| Endosulfan Sulfate | 16 | - | - | - | - | - | - | - | - |
| 4,4'-DDT | 16 | - | - | - | - | - | - | - | - |
| Methoxychlor | 80 | - | - | - | - | - | - | - | - |
| Endrin Ketone | 16 | - | - | - | - | - | - | - | - |
| alpha-Chlordane | 80 | - | - | - | - | - | - | - | - |
| gamma-Chlordane | 80 | - | - | - | - | - | - | - | - |
| Toxaphene | 160 | - | - | - | - | - | - | - | - |
| Aroclor-1016 | 80 | - | - | - | - | - | - | - | - |
| Aroclor-1221 | 80 | - | - | - | - | - | - | - | - |
| Aroclor-1232 | 80 | - | - | - | - | - | - | - | - |
| Aroclor-1242 | 80 | - | - | - | - | - | - | - | - |
| Aroclor-1248 | 80 | - | - | - | - | - | - | - | - |
| Aroclor-1254 | 160 | - | - | - | - | - | - | - | - |
| Aroclor-1260 | 160 | - | - | - | - | - | - | - | - |
| Dilution Factor: | | 1.0 | 1.0 | 1.0 | 1.0 | 1.0 | 1.0 | 1.0 | 1.0 |
| Percent Solids: | | 93 | 95 | 86 | 93 | 89 | 98 | 98 | 95 |
| Associated Method Blank: | | 370975 | 370975 | 370975 | 370975 | 370975 | 370910 | 370910 | 370910 |
| Associated Equipment Blank: | | - | - | - | - | - | - | - | - |
| Associated Field Blank: | | - | - | - | - | - | - | - | - |

Site: Fire Training Area

PROJECT: Naval Air Station Brunswick - Round 5 | Pesticides/PCBs Soil Analysis (ug/kg) | 12/04/90

Table 3
Summary Table

| SAMPLE LOCATION: | 11PS11050101XX | 11PS11050201XX | 11PS11050501XX | 11PS11060101XD | 11PS11060101XX | 11PS11060201XX | 11PS11060601XX | 11PS11070201XD |
|---|---|---|---|---|---|---|---|---|
| LAB NUMBER: | 370426 | 370440 | 370430 | 370425 | 370419 | 370418 | 370423 | 370422 |
| DATE SAMPLED: | 09/18/90 | 09/18/90 | 09/18/90 | 09/17/90 | 09/17/90 | 09/17/90 | 09/17/90 | 09/17/90 |
| DATE EXTRACTED: | 09/21/90 | 09/21/90 | 09/21/90 | 09/21/90 | 09/21/90 | 09/21/90 | 09/21/90 | 09/21/90 |
| DATE ANALYZED: | 10/03/90 | 09/25/90 | 09/27/90 | 10/05/90 | 09/27/90 | 10/03/90 | 10/03/90 | 10/03/90 |
| ANALYTE | CRQL | | | | | | | |
| alpha-BHC | 8 | - | - | - | - | - | - | - |
| beta-BHC | 8 | - | - | - | - | - | - | - |
| delta-BHC | 8 | - | - | - | - | - | - | - |
| gamma-BHC (Lindane) | 8 | - | - | - | - | - | - | - |
| Heptachlor | 8 | - | - | - | - | - | - | - |
| Aldrin | 8 | - | - | - | - | - | - | - |
| Heptachlor Epoxide | 8 | - | - | - | - | - | - | - |
| Endosulfan I | 8 | - | - | - | - | - | - | - |
| Dieldrin | 16 | - | - | - | - | - | - | - |
| 4,4'-DDE | 16 | - | - | - | - | - | - | 20 |
| Endrin | 16 | - | - | - | - | - | - | - |
| Endosulfan II | 16 | - | - | - | - | - | - | - |
| 4,4'-DDD | 16 | - | - | - | - | - | - | - |
| Endosulfan Sulfate | 16 | - | - | - | - | - | - | - |
| 4,4'-DDT | 16 | - | - | - | - | - | - | - |
| Methoxychlor | 80 | - | - | - | - | - | - | - |
| Endrin Ketone | 16 | - | - | - | - | - | - | - |
| alpha-Chlordane | 80 | - | - | - | - | - | - | - |
| gamma-Chlordane | 80 | - | - | - | - | - | - | - |
| Toxaphene | 160 | - | - | - | - | - | - | - |
| Aroclor-1016 | 80 | - | - | - | - | - | - | - |
| Aroclor-1221 | 80 | - | - | - | - | - | - | - |
| Aroclor-1232 | 80 | - | - | - | - | - | - | - |
| Aroclor-1242 | 80 | - | - | - | - | - | - | - |
| Aroclor-1248 | 80 | - | - | - | - | - | - | - |
| Aroclor-1254 | 160 | - | - | - | 1700 J | 8800 CJ | - | - |
| Aroclor-1260 | 160 | - | - | - | - | - | - | - |
| Dilution Factor: | | 1.0 | 1.0 | 1.0 | 1.0 | 1.0 | 1.0 | 1.0 |
| Percent Solids: | | 83 | 88 | 94 | 95 | 94 | 89 | 88 | 91 |
| Associated Method Blank: | | 370856 | 370859 | 370856 | 371017 | 370975 | 371017 | 371017 | 371017 |
| Associated Equipment Blank: | | - | - | - | - | - | - | - | - |
| Associated Field Blank: | | - | - | - | - | - | - | - | - |

Site: Fire Training Area

L-106

Table 3
Summary Table

| SAMPLE LOCATION: | 11PS11070201XX | 11PS11070501XX | 11PS11070701XX | 11PS11080101XX | 11PS11080201XX | 11PS11080601XX |
|---|---|---|---|---|---|---|
| LAB NUMBER: | 370421 | 370424 | 370420 | 370435 | 370439 | 370438 |
| DATE SAMPLED: | 09/17/90 | 09/17/90 | 09/17/90 | 09/18/90 | 09/18/90 | 09/18/90 |
| DATE EXTRACTED: | 09/21/90 | 09/21/90 | 09/21/90 | 09/21/90 | 09/21/90 | 09/21/90 |
| DATE ANALYZED: | 10/03/90 | 09/21/90 | 10/03/90 | 09/27/90 | 09/25/90 | 10/03/90 |
| ANALYTE | CRQL | | | | | |
| alpha-BHC | 8 | - | - | - | - | - |
| beta-BHC | 8 | - | - | - | - | - |
| delta-BHC | 8 | - | - | - | - | - |
| gamma-BHC (Lindane) | 8 | - | - | - | - | - |
| Heptachlor | 8 | - | - | - | - | - |
| Aldrin | 8 | - | - | - | - | - |
| Heptachlor Epoxide | 8 | - | - | - | - | - |
| Endosulfan I | 8 | - | - | - | - | - |
| Dieldrin | 16 | - | - | - | - | - |
| 4,4'-DDE | 16 | - | - | - | - | - |
| Endrin | 16 | - | - | - | - | - |
| Endosulfan II | 16 | - | - | - | - | - |
| 4,4'-DDD | 16 | - | - | - | - | - |
| Endosulfan Sulfate | 16 | - | - | - | - | - |
| 4,4'-DDT | 16 | - | - | - | - | - |
| Methoxychlor | 80 | - | - | - | - | - |
| Endrin Ketone | 16 | - | - | - | - | - |
| alpha-Chlordane | 80 | - | - | - | - | - |
| gamma-Chlordane | 80 | - | - | - | - | - |
| Toxaphene | 160 | - | - | - | - | - |
| Aroclor-1016 | 80 | - | - | - | - | - |
| Aroclor-1221 | 80 | - | - | - | - | - |
| Aroclor-1232 | 80 | - | - | - | - | - |
| Aroclor-1242 | 80 | - | - | - | - | - |
| Aroclor-1248 | 80 | - | - | - | - | - |
| Aroclor-1254 | 160 | - | - | - | - | - |
| Aroclor-1260 | 160 | - | - | - | - | - |
| Dilution Factor: | | 1.0 | 1.0 | 1.0 | 1.0 | 1.0 |
| Percent Solids: | | 92 | 93 | 90 | 90 | 96 | 94 |
| Associated Method Blank: | | 370910 | 371017 | 371017 | 370856 | 370859 | 370859 |
| Associated Equipment Blank: | | - | - | - | - | - | - |
| Associated Field Blank: | | - | - | - | - | - | - |

Site: Fire Training Area

Table 3
Summary Table

| SAMPLE LOCATION: | 11PS11010001XX | 11PS11010101XX | 11PS11010501XX | 11PS11020401XX | 11PS11020601XX | 11PS11030101XX | 11PS11030201XX |
|---|---|---|---|---|---|---|---|
| LAB NUMBER: | 370497 | 370498 | 370501 | 370496 | 370504 | 370500 | 370502 |
| DATE SAMPLED: | 09/18/90 | 09/18/90 | 09/18/90 | 09/17/90 | 09/17/90 | 09/18/90 | 09/18/90 |
| ANALYTE / CRQL | | | | | | | |
| Aluminum 40 | 10200 | 5160 | 8710 | 3770 | 5030 | 10200 | 8640 |
| Antimony 12 | - | - | - | - | - | - | - |
| Arsenic 2 | - | - | - | - | - | - | - |
| Barium 40 | - | - | - | - | - | - | - |
| Beryllium 1 | - | - | - | - | - | - | - |
| Cadmium 1 | 1.6 | 2.2 | - | - | - | - | - |
| Calcium 1000 | - | - | - | - | - | - | - |
| Chromium 2 | 9.3 J | 7.0 J | 13.8 J | 5.6 J | 9.5 J | 8.6 J | 10.4 J |
| Cobalt 10 | - | - | - | - | - | - | - |
| Copper 5 | 8.6 | 16.0 | 9.4 | - | 6.1 | 12.4 | 7.3 |
| Iron 20 | 7890 | 6540 | 10900 | 5960 | 7930 | 8050 | 9460 |
| Lead 0 .6 | 289 J | 378 J | 4.0 J | 3.5 J | 5.6 J | 0 .99 J | 3.7 J |
| Magnesium 1000 | - | - | 3410 | 1690 | 2510 | - | 2010 |
| Manganese 3 | 58.5 | 68.0 | 134 | 73.7 | 106 | 53.2 | 94.7 |
| Mercury 0 .1 | 0 .23 J | - | - | - | - | - | - |
| Nickel 8 | - | - | 10.8 | - | - | - | 9.5 |
| Potassium 1000 | - | - | 1950 | 1100 | 1560 | - | - |
| Selenium 1 | - | - | - | - | - | - | - |
| Silver 2 | - | - | - | - | - | - | - |
| Sodium 1000 | - | - | - | - | - | - | - |
| Thallium 2 | R | R | R | R | - | R | R |
| Vanadium 10 | 16.3 | 15.4 | 20.5 | - | 16.4 | 18.1 | 16.9 |
| Zinc 4 | 33.2 J | 48.5 J | 27.5 J | 15.7 J | 20.4 J | 14.0 J | 22.2 J |
| Cyanide 1 | - | - | - | - | - | - | - |
| Percent Solids: | 86 | 77 | 87 | 93 | 95 | 89 | 93 |
| Associated Method Blank: | BR18551S2 | BR18551S2 | BR18551S2 | BR18551S2 | BR18551S2 | BR18551S2 | BR18551S2 |
| Associated Equipment Blank: | - | - | - | - | - | - | - |
| Associated Field Blank: | - | - | - | - | - | - | - |

Box Number: 4607-510

PROJECT: Naval Air Station Brunswick - Round 5 Inorganic Soil Analysis (mg/kg) 01/15/91

Table 3
Summary Table

| SAMPLE LOCATION: | 11MS304X2201XX | 11MS304X3401XX | 11MS304X3801XX | 11PS11020301XX |
|---|---|---|---|---|
| LAB NUMBER: | 371663 | 371666 | 371667 | 370499 |
| DATE SAMPLED: | 09/27/90 | 09/27/90 | 09/27/90 | 09/17/90 |
| ANALYTE / CRQL | | | | |
| Aluminum 40 | 4630 J | 4640 J | 28300 J | 5950 J |
| Antimony 12 | - | - | - | - |
| Arsenic 2 | - | - | 14.0 | 4.7 |
| Barium 40 | - | - | 83.4 | 94.1 |
| Beryllium 1 | - | - | - | - |
| Cadmium 1 | - | - | - | 2.9 |
| Calcium 1000 | - | - | 4190 J | - |
| Chromium 2 | 9.0 | 7.9 | 56.0 J | 11.7 |
| Cobalt 10 | - | - | 22.7 J | - |
| Copper 5 | - | - | 35.3 J | 34.3 J |
| Iron 20 | 7580 | 7220 | 44700 | 8350 |
| Lead 0.6 | 2.5 J | 2.5 J | 17.2 J | 434 J |
| Magnesium 1000 | 2070 | 2130 | 13600 J | 2470 |
| Manganese 3 | 105 | 91.1 | 803 J | 104 |
| Mercury 0.1 | - | - | - | - |
| Nickel 8 | - | - | 52.6 | 19.1 |
| Potassium 1000 | - | - | 6380 | - |
| Selenium 1 | - | - | - | - |
| Silver 2 | - | - | - | - |
| Sodium 1000 | - | - | - | - |
| Thallium 2 | - | - | - | - |
| Vanadium 10 | 13.7 | 12.8 | 64.8 J | 54.9 |
| Zinc 4 | 17.3 | 17.6 | 94.2 | 54.2 |
| Cyanide 1 | - | - | - | - |
| Percent Solids: | 80 | 80 | 75 | 74 |
| Associated Method Blank: | BN135888S | BN135888S | BN135888S | BN135888S |
| Associated Equipment Blank: | - | - | - | - |
| Associated Field Blank: | - | - | - | - |

Box Number: 4607-512

PROJECT: Naval Air Station Brunswick - Round 5

Inorganic Soil Analysis (mg/kg)

01/14/91

Table 3
Summary Table

| SAMPLE LOCATION: | 11PS11050101XX | | 11PS11050201XX | |
|---|---|---|---|---|
| LAB NUMBER: | 370525 | | 370542 | |
| DATE SAMPLED: | 09/18/90 | | 09/18/90 | |
| ANALYTE / CRQL | | | | |
| Aluminum 40 | 6270 | | 12900 | |
| Antimony 12 | - | | - | |
| Arsenic 2 | - | | - | |
| Barium 40 | - | | - | |
| Beryllium 1 | - | | - | |
| Cadmium 1 | - | | - | |
| Calcium 1000 | - | | - | |
| Chromium 2 | - | | - | |
| Cobalt 10 | 7.8 | | 10.7 | |
| Copper 5 | - | | - | |
| Iron 20 | - | | - | |
| Lead 0.6 | 7390 | | 11600 | |
| Magnesium 1000 | 8.4 | J | 5.5 | J |
| Manganese 3 | - | | - | |
| Mercury 0.1 | 72.3 | | 127 | |
| Nickel 8 | - | | - | |
| Potassium 1000 | - | | - | |
| Selenium 1 | - | | - | |
| Silver 2 | | R | | R |
| Sodium 1000 | - | | - | |
| Thallium 2 | - | | - | |
| Vanadium 10 | - | | - | |
| Zinc 4 | 13.3 | | 20.3 | |
| Cyanide 1 | 15.2 | | 17.7 | |
| | - | | - | |
| Percent Solids: | 83 | | 89 | |
| Associated Method Blank: | BR18551S | | BR18551S | |
| Associated Equipment Blank: | - | | - | |
| Associated Field Blank: | - | | - | |

Box Number: 4607-509

L-110

PROJECT: Naval Air Station Brunswick - Round 5 | Inorganic Soil Analysis (mg/kg) | 01/15/91

Table 3
Summary Table

| | | |
|---|---|---|
| SAMPLE LOCATION: | | 11MS304X2201XD |
| LAB NUMBER: | | 371661 |
| DATE SAMPLED: | | 09/27/90 |
| ANALYTE | CRQL | |
| Aluminum | 40 | 5180 J |
| Antimony | 12 | - |
| Arsenic | 2 | - |
| Barium | 40 | - |
| Beryllium | 1 | - |
| Cadmium | 1 | - |
| Calcium | 1000 | - |
| Chromium | 2 | 8.7 |
| Cobalt | 10 | - |
| Copper | 5 | - |
| Iron | 20 | 8280 |
| Lead | 0.6 | 2.4 J |
| Magnesium | 1000 | 2330 |
| Manganese | 3 | 110 |
| Mercury | 0.1 | - |
| Nickel | 8 | - |
| Potassium | 1000 | 1380 |
| Selenium | 1 | - |
| Silver | 2 | - |
| Sodium | 1000 | - |
| Thallium | 2 | - |
| Vanadium | 10 | 15.3 |
| Zinc | 4 | 19.3 |
| Cyanide | 1 | - |
| Percent Solids: | | 81 |
| Associated Method Blank: | | BN135888S |
| Associated Equipment Blank: | | - |
| Associated Field Blank: | | - |

Box Number: 4607-512

Table 3
Summary Table

| SAMPLE LOCATION: | | 11PS11030601XX | 11PS11040101XX | 11PS11040201XX | 11PS11040701XX | 11PS11060101XD | 11PS11060101XX | 11PS11060201XX | 11PS11060601XX |
|---|---|---|---|---|---|---|---|---|---|
| LAB NUMBER: | | 370503 | 370495 | 370399 | 370494 | 370524 | 370507 | 370505 | 370516 |
| DATE SAMPLED: | | 09/18/90 | 09/17/90 | 09/17/90 | 09/17/90 | 09/17/90 | 09/17/90 | 09/17/90 | 09/17/90 |
| ANALYTE | CRQL | | | | | | | | |
| Aluminum | 40 | 8910 | 14900 | 6840 | 3690 | 11200 | 13300 | 5450 | 5280 |
| Antimony | 12 | - | - | - | - | - | - | - | - |
| Arsenic | 2 | - | - | - | - | - | - | - | - |
| Barium | 40 | - | 412 | - | - | 342 | 400 | - | - |
| Beryllium | 1 | - | - | - | - | - | - | - | - |
| Cadmium | 1 | - | - | - | - | 1.6 | - | - | - |
| Calcium | 1000 | - | 1640 | - | - | 1500 | 1690 | - | - |
| Chromium | 2 | 15.4 J | 21.2 J | 7.6 J | 5.9 J | 91.8 J | 53.4 J | 7.7 J | 8.4 J |
| Cobalt | 10 | - | 16.8 | - | - | 12.5 | 15.0 | - | - |
| Copper | 5 | 11.2 | 127 J | 5.8 | 6.6 | 77.0 J | 107 J | 7.0 | 8.0 |
| Iron | 20 | 13600 | 30300 | 6890 | 6290 | 23200 | 27900 | 7610 | 7970 |
| Lead | 0 .6 | 3.8 J | 1.2 J | 2.5 J | 2.6 J | 202 J | 129 J | 4.1 J | 3.1 J |
| Magnesium | 1000 | 3960 | 10700 | 1380 | 1560 | 7120 | 8830 | 1940 | 2220 |
| Manganese | 3 | 166 | 689 J | 74.8 | 96.6 | 433 J | 516 J | 115 | 109 |
| Mercury | 0 .1 | - | - | - | - | - | - | - | - |
| Nickel | 8 | 12.3 | 11.2 | - | - | 10.2 | 10.0 | - | - |
| Potassium | 1000 | 2340 | 10600 | - | - | 6360 | 8280 | - | 1340 |
| Selenium | 1 | - | - | - | - | - | - | - | - |
| Silver | 2 | - | - | - | - | - | - | - | - |
| Sodium | 1000 | - | - | - | - | - | - | - | - |
| Thallium | 2 | R | R | R | R | R | R | R | R |
| Vanadium | 10 | 24.6 | 123 | 12.5 | 10.9 | 85.5 | 100 | 13.4 | 14.0 |
| Zinc | 4 | 30.3 J | 68.7 J | 16.3 J | 15.4 J | 233 J | 124 J | 17.1 J | 20.0 J |
| Cyanide | 1 | - | - | - | - | 2.8 | - | - | - |
| Percent Solids: | | 89 | 98 | 98 | 95 | 95 | 94 | 89 | 88 |
| Associated Method Blank: | | BR18551S2 | BR18551S2 | BR18551S2 | BR18551S2 | BR18551S2 | BR18551S2 | BR18551S2 | BR18551S2 |
| Associated Equipment Blank: | | - | - | - | - | - | - | - | - |
| Associated Field Blank: | | - | - | - | - | - | - | - | - |

Box Number: 4607-510

Table 3
Summary Tabl

| SAMPLE LOCATION: | 11PS11070201XD | | 11PS11070201XX | | 11PS11070501XX | | 11PS11070701XX | |
|---|---|---|---|---|---|---|---|---|
| LAB NUMBER: | 370513 | | 370512 | | 370522 | | 370509 | |
| DATE SAMPLED: | 09/17/90 | | 09/17/90 | | 09/17/90 | | 09/17/90 | |
| ANALYTE | CRQL | | | | | | | |
| Aluminum | 40 | 7370 | | 7140 | | 5400 | | 3910 | |
| Antimony | 12 | - | | - | | - | | - | |
| Arsenic | 2 | - | | - | | - | | - | |
| Barium | 40 | - | | - | | - | | - | |
| Beryllium | 1 | - | | - | | - | | - | |
| Cadmium | 1 | - | | - | | - | | - | |
| Calcium | 1000 | - | | - | | - | | - | |
| Chromium | 2 | 7.0 | J | 7.2 | J | 7.3 | J | 5.8 | J |
| Cobalt | 10 | - | | - | | - | | - | |
| Copper | 5 | 7.2 | | 9.8 | | - | | 5.8 | |
| Iron | 20 | 7090 | | 6890 | | 7490 | | 6550 | |
| Lead | 0 .6 | 1.3 | J | 0 .83 | J | 2.1 | J | 2.6 | J |
| Magnesium | 1000 | - | | - | | 1840 | | 1590 | |
| Manganese | 3 | 97.0 | | 105 | | 80.2 | | 96.8 | |
| Mercury | 0 .1 | 1.1 | J | - | | - | | - | |
| Nickel | 8 | - | | - | | - | | - | |
| Potassium | 1000 | - | | - | | 1160 | | - | |
| Selenium | 1 | - | | - | | - | | - | |
| Silver | 2 | - | | - | | - | | - | |
| Sodium | 1000 | - | | - | | - | | - | |
| Thallium | 2 | | R | | R | | R | | R |
| Vanadium | 10 | 12.7 | | 13.1 | | 13.3 | | - | |
| Zinc | 4 | 24.2 | J | 26.2 | J | 17.2 | J | 15.9 | J |
| Cyanide | 1 | - | | - | | - | | 1.4 | |
| Percent Solids: | | 92 | | 92 | | 93 | | 91 | |
| Associated Method Blank: | | BR18551S2 | | BR18551S2 | | BR18551S2 | | BR18551S2 | |
| Associated Equipment Blank: | | - | | - | | - | | - | |
| Associated Field Blank: | | - | | - | | - | | - | |

Box Number: 4607-510

PROJECT: Naval Air Station Brunswick - Round 5 Inorganic Soil Analysis (mg/kg) 01/14/91

Table 3
Summary Tabl

| SAMPLE LOCATION: | | 11PS11050501XX | | 11PS11080101XX | | 11PS11080201XX | | 11PS11080601XX | |
|---|---|---|---|---|---|---|---|---|---|
| LAB NUMBER: | | 370532 | | 370534 | | 370541 | | 370540 | |
| DATE SAMPLED: | | 09/18/90 | | 09/18/90 | | 09/18/90 | | 09/18/90 | |
| ANALYTE | CRQL | | | | | | | | |
| Aluminum | 40 | 6660 | | 5220 | | 7120 | | 5330 | |
| Antimony | 12 | - | | - | | - | | - | |
| Arsenic | 2 | - | | 8.7 | | - | | - | |
| Barium | 40 | - | | 51.4 | | - | | - | |
| Beryllium | 1 | - | | - | | - | | - | |
| Cadmium | 1 | - | | - | | - | | - | |
| Calcium | 1000 | - | | 2730 | J | - | | 1130 | J |
| Chromium | 2 | 11.5 | | 8.4 | | 11.7 | | 9.6 | |
| Cobalt | 10 | - | | - | | - | | - | |
| Copper | 5 | - | | 20.5 | | - | | - | |
| Iron | 20 | 10100 | | 9570 | | 10200 | | 8170 | |
| Lead | 0.6 | 2.5 | J | 21.6 | J | 5.3 | J | 5.6 | J |
| Magnesium | 1000 | 2990 | | - | | 2930 | | 2460 | |
| Manganese | 3 | 142 | | 116 | | 115 | | 107 | |
| Mercury | 0.1 | - | | - | | - | | - | |
| Nickel | 8 | 8.6 | | 13.0 | | 8.7 | | - | |
| Potassium | 1000 | 1910 | | - | | 1330 | | 1440 | |
| Selenium | 1 | | R | | R | | R | | R |
| Silver | 2 | - | | - | | - | | - | |
| Sodium | 1000 | - | | - | | - | | - | |
| Thallium | 2 | - | | - | | - | | - | |
| Vanadium | 10 | 17.8 | | 16.9 | | 18.1 | | 14.8 | |
| Zinc | 4 | 24.6 | | 30.4 | | 23.1 | | 20.9 | |
| Cyanide | 1 | - | | - | | - | | - | |
| Percent Solids: | | 94 | | 91 | | 96 | | 94 | |
| Associated Method Blank: | | BR18551S | | BR18551S | | BR18551S | | BR18551S | |
| Associated Equipment Blank: | | - | | - | | - | | - | |
| Associated Field Blank: | | - | | - | | - | | - | |

Box Number: 4607-509

PROJECT: Naval Air Station Brunswick

Miscellaneous Soil Analysis (mg/kg)

14-Jan-91

Table 3
Summary Table
(Method Blank Evaluation)

| SAMPLE LOCATION: | | 12PS12010601XX | 12PS12010101XX | 12PS12010401XX | 12PS12020101XX | 12PS12020201X0 | 12PS12020201XX | 12PS12020301XX | 12PS12030101XX |
|---|---|---|---|---|---|---|---|---|---|
| DATE SAMPLED: | | 09/20/90 | 09/20/90 | 09/20/90 | 09/20/90 | 09/20/90 | 09/20/90 | 09/20/90 | 09/20/90 |
| ANALYTE | DL | | | | | | | | |
| Cadmium | 0.50 | - | - | - | - | - | - | - | - |
| Chromium | 1.0 | 62 | 11 | 41 | 19 | 21 | 11 | 42 | 13 |
| Mercury | 0.045 | - | 0.27 | - | - | - | - | - | - |
| Nitrate-nitrite as N | 1.0 | - | 2.0 | - | - | - | - | - | 1.1 |
| Lead | 0.30 | 17 | 9.5 | 13 | 47 | 44 | 15 | 9.4 | 27 |
| Phosphorus | 30 | 530 | 210 | 490 | 190 | 170 | 250 | 120 | 240 |
| Percent Solids: | | 81 | 88 | 82 | 93 | 91 | 95 | 85 | 93 |
| Associated Method Blank: | | BN12MCS | BN12MCS | BN12MCS | BN12MCS | BN12MCS | BN12MCS | BN12MCS | BN12MCS |

Table 3
Summary Table
(Method Blank Evaluation)

| SAMPLE LOCATION: | | 12PS12030201XD | 12PS12030201XX | 12PS12030301XX |
|---|---|---|---|---|
| DATE SAMPLED: | | 09/20/90 | 09/20/90 | 09/20/90 |
| ANALYTE | DL | | | |
| Cadmium | 0.50 | - | - | - |
| Chromium | 1.0 | 27 | 22 | 28 |
| Mercury | 0.045 | - | - | - |
| Nitrate-nitrite as N | 1.0 | - | - | - |
| Lead | 0.30 | 10 | 6.8 | 8.2 |
| Phosphorus | 30 | 240 J | 100 J | 350 |
| Percent Solids: | | 81 | 87 | 86 |
| Associated Method Blank: | | BN12MCS | BN12MCS | BN12MCS |

Table 3
Summary Table
(Method Blank Evaluation)

| SAMPLE LOCATION: | 12PS12010601XX | 12PS12010101XX | 12PS12010401XX | 12PS12020101XX | 12PS12020201XD | 12PS12020201XX | 12PS12020301XX | 12PS12030101XX |
|---|---|---|---|---|---|---|---|---|
| LAB NUMBER: | 01A | 02A | 03A | 04A | 05A | 08A | 09A | 10A |
| DATE SAMPLED: | 09/20/90 | 09/20/90 | 09/20/90 | 09/20/90 | 09/20/90 | 09/20/90 | 09/20/90 | 09/10/90 |
| DATE EXTRACTED: | 10/04/90 | 10/04/90 | 10/04/90 | 10/04/90 | 10/04/90 | 10/04/90 | 10/04/90 | 10/04/90 |
| DATE ANALYZED: | 10/31/90 | 10/31/90 | 10/31/90 | 10/31/90 | 10/31/90 | 10/31/90 | 10/31/90 | 10/31/90 |
| ANALYTE | | | | | | | | |
| 2,4-DNT | - | - | - | - | - | - | - | - |
| 2,6-DNT | - | - | - | - | - | - | - | - |
| HMX | - | - | - | - | - | - | - | - |
| RDX | - | - | - | - | - | - | - | - |
| TNT | - | - | - | - | - | - | - | - |
| TETRYL | - | - | - | - | - | - | - | - |
| Associated Method Blank: | BNRBTNT | BNRBTNT | BNRBTNT | BNRBTNT | BNRBTNT | BNRBTNT | BNRBTNT | BNRBTNT |

Table 3
Summary Table
(Method Blank Evaluation)

| SAMPLE LOCATION: | 12PS12030201XD | 12PS12030201XX | 12PS12030301XX |
|---|---|---|---|
| LAB NUMBER: | 11A | 12A | 13A |
| DATE SAMPLED: | 09/20/90 | 09/20/90 | 09/20/90 |
| DATE EXTRACTED: | 10/04/90 | 10/04/90 | 10/04/90 |
| DATE ANALYZED: | 10/31/90 | 11/01/90 | 11/01/90 |
| ANALYTE | | | |
| 2,4-DNT | - | - | - |
| 2,6-DNT | - | - | - |
| HMX | - | - | - |
| RDX | - | - | - |
| TNT | - | - | - |
| TETRYL | - | - | - |
| Associated Method Blank: | BNRBTNT | BNRBTNT | BNRBTNT |

# TENTATIVELY IDENTIFIED COMPOUNDS

TENTATIVELY IDENTIFIED COMPOUNDS (TICs) SUMMARY
FOR BRUNSWICK (NASB); BOX: 4607-501
AQUEOUS (ug/L)

VOLATILE

NO TICS WERE IDENTIFIED

SEMIVOLATILE

| | 08MW812XXX05XX | 08MW813XXX05XX | 08MW814XXX05XX |
|---|---|---|---|
| 2-CYCLOHEXEN-1-ONE | 5 J | 5 J | 5 J |
| ETHANOL, 2-CHLORO-, PHOSPHATE (3:1) | 16 J | 12 J | 10 J |
| 1-PENTEN-3-OL, 2-METHYL | 7 J | | |
| 1,2-BENZENEDICARBOXYLIC ACID | | 5 J | |
| UNKNOWN PHTHALATE | | | 7 J |

TENTATIVELY IDENTIFIED COMPOUNDS (TICs) SUMMARY
FOR BRUNSWICK (NASB); BOX: 4607-502
SOIL (ug/kg)

VOLATILE

| | 11PS11010101XX | 11PS11010001XX | 11PS11010501XX | 11PS11020601XX |
|---|---|---|---|---|
| UNKNOWN ALKANE | 1180000 J | | | |
| TRIMETHYLHEXANE | 240000 J | | | |
| UNKNOWN HYDROCARBON | 344000 J | 2390 J | 85 J | 26 J |
| UNKNOWN OXYGENATED ALKANE | 56000 J | | | |
| UNKNOWN CYCLIC HYDROCARBON | | 320 J | | |
| UNKNOWN SUBSTITUTED CYLCOHEXANE | | 210 J | | |
| TRIMETHYLCYCLOHEXANE | | | | 26 J |
| DIMETHYLCYCLOHEXANE | | | | 120 J |
| TRIMETHYLBENZENE | | | | 99 J |
| UNKNOWN OXYGENATED HYDROCARBON | | | | |
| DIMETHYLCYCLOOCTANE | | | | |
| ETHYLDIMETHYLCYCLOHEXANE | | | | |

| | 11PS11030101XX |
|---|---|
| UNKNOWN HYDROCARBON | 10 J |
| UNKNOWN CYCLIC HYDROCARBON | 25 J |
| UNKNOWN OXYGENATED HYDROCARBON | 55 J |
| DIMETHYLCYCLOOCTANE | 36 J |
| ETHYLDIMETHYLCYCLOHEXANE | 24 J |

SEMIVOLATILE

| | 11PS11010001XX | 11PS11010101XX | 11PS11010101XXDL | 11PS11010501XX |
|---|---|---|---|---|
| DECAHYDROMETHYLNAPHTHALENE | 35000 J | | | |
| DIMETHYLNAPHTHALENE | 37000 J | | | 2476000 J |
| UNKNOWN HYDROCARBON | 223000 J | 2800000 J | 2093000 J | |
| DIMETHYLHEPTADECANE | 140000 J | | | |
| UNKNOWN PAH | | 220000 J | | |
| PENTACOSANE | | 240000 J | 150000 J | |
| 2,6,10-TRIMETHYLDODECANE | | | 96000 J | |
| TETRADECANE | | | 180000 J | |
| 2,6-DIMETHYLHEPTADECANE | | | 790000 J | |
| TRIMETHYLNAPHTHALENE | | | 67000 J | |
| HEPTADECANE | | | 120000 J | |
| TRICARBONYL[N-(PHENYL-2-PYRIDINYLMETHYLE)IRON | | | 260000 J | |
| DOCOSANE | | | | |
| UNKNOWN ALCOHOL | | | | 23000 J |

TENTATIVELY IDENTIFIED COMPOUNDS (TICs) SUMMARY
FOR BRUNSWICK (NASB); BOX: 4607-502
SOIL (ug/kg)

SEMIVOLATILE (con't)

| | 11PS11020601XX | 11PS11030101XX | 11PS11030201XX | 11PS11040101XX |
|---|---|---|---|---|
| UNKNOWN HYDROCARBON | 383000 J | 1478000 J | 471600 J | 11570 J |
| DIMETHYLUNDECANE | 42000 J | 25000 J | | |
| TRIMETHYLDODECANE | 52000 J | | 26000 J | |
| TETRADECANE | 96000 J | | | |
| DIMETHYLNAPHTHALENE | 54000 J | | | |
| HEXADECANE | 52000 J | 27000 J | | |
| DIMETHYLHEPTADECANE | 61000 J | | | 340 J |
| HEPTADECANE | 77000 J | | | |
| 2,6-DIEMTHYLHEPTADECANE | | 22000 J | | |
| TETRAMETHYLPENTADECANE | | | 9600 J | |

| | 11PS11060101XD | 11PS11060101XX | 11PS11060601XX | 11PS11040101XX |
|---|---|---|---|---|
| UNKNOWN HYDROCARBON | 272600 J | 103700 J | 49000 J | 11570 J |

TENTATIVELY IDENTIFIED COMPOUNDS (TICs) SUMMARY
FOR BRUNSWICK (NASB); BOX: 4607-503
SOIL (ug/kg)

VOLATILE

| | 11PS11020301XX |
|---|---|
| TRIMETHYLPENTANE | 95 J |
| NONANE | 110 J |
| ETHYLMETHYLBENZENE | 270 J |
| TRIMETHYLBENZENE | 1550 J |
| UNKNOWN HYDROCARBON | 1600 J |

SEMIVOLATILE

| | 11PS11020301XX | 09PS904X0101XX | 09PS911X0201XX | 11MS304X2201XX |
|---|---|---|---|---|
| 2,5-DIMETHYLNONANE | 36000 J | | | |
| UNKNOWN HYDROCARBON | 362000 J | | | |
| 2,6-DIMETHYLUNDECANE | 52000 J | | | |
| 2,6-DIMETHYLHEPTADECANE | 117000 J | | | |
| 2,6,10-TRIMETHYLDODECANE | 72000 J | | | |
| TETRADECANE | 130000 J | | | |
| DIMETHYLNAPHTHALENE | 50000 J | | | |
| HEPTADECANE | 77000 J | | | |
| HEXADECANE | 45000 J | | | |
| OCTADECANE | 29000 J | | | |
| UNKNOWN PAH | | 338 J | 380 J | |
| BENZOFLUORENE | | 450 J | 310 J | |
| BENZONAPHTHOTHIOPHENE | | 74 J | 69 J | |
| BENZOPYRENE | | 710 J | 520 J | |
| METHYLPYRENE | | | 100 J | |
| MONO(2-ETHYLHEXYL)ESTER HEXANEDIOIC ACID | | | | 210 J |

TENTATIVELY IDENTIFIED COMPOUNDS (TICs) SUMMARY
FOR BRUNSWICK (NASB); BOX: 4607-504
SOIL (ug/kg)

VOLATILE

NO TICs WERE DETECTED

SEMIVOLATILE

| | 11PS11050101XX | 11PS11050201XX | 09PS906X0101XX | 09PS906X0601XX |
|---|---|---|---|---|
| DIMETHYLUNDECANE | 14900 J | | | |
| DIMETHYLHEPTADECANE | 21100 J | | | |
| UNKNOWN HYDROCARBON | 10800 J | 220 J | | |
| TRIMETHYLDODECANE | 6400 J | | | |
| TETRADECANE | 8400 J | | | |
| UNKNOWN ALKENE | | 2600 J | | |
| EICOSENE | | | 390 J | |
| TRIMETHYLHEPTANE | | | | 180 J |

| | 09PS907X0201XX | 09PS907X04X01XX | 09PS909X0301XX |
|---|---|---|---|
| TRIMETHYL HEPTANE | 180 J | 180 J | 180 J |
| UNKNOWN HYDROCARBON | | 300 J | |

TENTATIVELY IDENTIFIED COMPOUNDS (TICs) SUMMARY
FOR BRUNSWICK (NASB); BOX: 4607-505
AQUEOUS (ug/L)

VOLATILE

| | OBDWXX1XXX01XX | OBDWXX7XXX01XX | OBDWX17XXX01XX | OBDWX19XXX01XX |
|---|---|---|---|---|
| PENTANE | 2.3 J | 3.4 J | 5.2 J | 5.4 J |

| | OBQTXX2XXX01XX |
|---|---|
| PENTANE | 3.8 J |
| DIAZENEDICARBOXAMIDE | 5.1 J |

TENTATIVELY IDENTIFIED COMPOUNDS (TICs) SUMMARY
FOR BRUNSWICK (NASB); BOX: 4607-506
AQUEOUS (ug/L)

VOLATILE

| | OBDWX10XXX01XX | OBDWX11XXX01XX | OBDWX14XXX01XX | OBDWX16XXX01XX |
|---|---|---|---|---|
| PENTANE | 3.7 J | 3.0 J | 7.2 J | 2.7 J |

| | OBDWX16XXX01XD | OBDWXX3XXX01XX | OBDWXX4XXX01XX | OBDWXX4XXX01XD |
|---|---|---|---|---|
| PENTANE | 1.4 J | 8.4 J | 8.9 J | 9.1 J |

| | OBDWXX6XXX01XX | OBDWXX8XXX01XX | OBDWXX9XXX01XX | OBQTXX1XXX01XX |
|---|---|---|---|---|
| PENTANE | 8.6 J | 3.2 J | 1.8 J | 5.4 J |
| ACETALDEHYDE | | | | 2.6 J |

TENTATIVELY IDENTIFIED COMPOUNDS (TICs) SUMMARY
FOR NAVAL AIR STATION BRUNSWICK; BOX: 4607-513
AQUEOUS (ug/L)

SEMIVOLATILE

| | BNQTXX5XXX02XX |
|---|---|
| UNKNOWN C4 ALKANE | 10 J |

TENTATIVELY IDENTIFIED COMPOUNDS (TICs) SUMMARY
FOR NAVAL AIR STATION BRUNSWICK; BOX: 4607-514
AQUEOUS (ug/L)

VOLATILE
---

| | 01MW207AXX02XX | 01MW234XXX02XX | 13MW1303XX02XX |
|---|---|---|---|
| UNKNOWN ALCOHOL | 35 J | | |
| UNKNOWN ALKANE | 5 J | | |
| UNKNOWN SUBSTITUTED BENZENE | | 128 J | |
| UNKNOWN C7 ALKANE | | | 37 J |
| UNKNOWN ALKANE | | | 45 J |

TENTATIVELY IDENTIFIED COMPOUNDS (TICs) SUMMARY
FOR NAVAL AIR STATION BRUNSWICK; BOX: 4607-515
AQUEOUS (ug/L)

SEMIVOLATILE

| | 01MW234XXX02XXDL | 06MW320XXX02XX | EPMW305XXX02XX | EPMW306XXX02XD |
|---|---|---|---|---|
| METHYL BENZOIC ACID | 1100 J | | | |
| C3-BENZENE | 192 J | | | |
| C4-BENZENE | 162 J | | | |
| C2-PHENOL | 40 J | | | |
| UNKNOWN CARBOXYLIC ACID | 80 J | | | |
| DIHYDROINDENE | 40 J | | | |
| CAMPHOR | 26 J | | | |
| UNKNOWN CARBOXYLIC ACID ESTER | 44 J | | | |
| CYCLOHEXENONE | | 4 J | | |
| SULFUR | | | 8 J | 5 J |

| | EPMW307XXX02XX | EPMW311XXX02XX | EPMW311XXX02XD | EPMW312XXX02XX |
|---|---|---|---|---|
| UNKNOWN HYDROCARBON | 13 J | | | |
| SULFUR | | 8 J | 4 J | 7 J |

| | EPMW313XXX02XX | EPMW315AXX02XX | EPMW316AXX02XX | EPMW317AXX02XX |
|---|---|---|---|---|
| UNKNOWN CARBOXYLIC ACID | 4 J | | | |
| SULFUR | 190 J | 38 J | | 20 J |
| UNKNOWN HYDROCARBON | 83 J | | 28 J | |

# APPENDIX M

# APPENDIX TABLES OF LABORATORY ANALYTICAL DATA

# PRIVATE WELL ANALYTICAL DATA

PROJECT: Naval Air Station Brunswick - Round 5 Volatile Organic Aqueous Analysis (ug/L) 03/14/91

Table 2
Validation / Summary Table

| SAMPLE LOCATION: | 0BDWXX1XXX01XX | 0BDWXX2XXX01XX | 0BDWXX3XXX01XX | 0BDWXX4XXX01XD | 0BDWXX4XXX01XX | 0BDWXX5XXX01XX | 0BDWXX6XXX01XX | 0BDWXX7XXX01XX |
|---|---|---|---|---|---|---|---|---|
| LAB NUMBER: | 901016605A | 901007301A | 901007305A | 901007307D | 901007306E | 901007310A | 901007308A | 901016610E |
| DATE SAMPLED: | 10/10/90 | 10/03/90 | 10/03/90 | 10/03/90 | 10/03/90 | 10/03/90 | 10/03/90 | 10/10/90 |
| DATE ANALYZED: | 10/17/90 | 10/09/90 | 10/09/90 | 10/09/90 | 10/09/90 | 10/10/90 | 10/09/90 | 10/17/90 |
| ANALYTE | CRQL | | | | | | | |
| Chloromethane | 10 | 1 U | 1 U | 1 U | 1 U | 1 U | 1 U | 1 U | 1 U |
| Bromomethane | 10 | 1 U | 1 U | 1 U | 1 U | 1 U | 1 U | 1 U | 1 U | 1 U |
| Vinyl Chloride | 10 | 1 U | 1 U | 1 U | 1 U | 1 U | 1 U | 1 U | 1 U | 1 U |
| Chloroethane | 10 | 1 U | 1 U | 1 U | 1 U | 1 U | 1 U | 1 U | 1 U | 1 U |
| Methylene Chloride | 5 | 0.5 U | 2 UJ | 2 UJ | 2 UJ | 1 UJ | 1 UJ | 1 UJ | 1 U |
| Acetone | 10 | 1 U | 1 U | 1 U | 1 U | 1 U | 1 U | 1 U | 1 U |
| Carbon Disulfide | 5 | 0.5 U | 0.5 U | 0.5 U | 0.5 U | 0.5 U | 0.5 U | 0.5 U | 0.5 U |
| 1,1-Dichloroethene | 5 | 0.5 U | 0.5 U | 0.5 U | 0.5 U | 0.5 U | 0.5 U | 0.5 U | 0.5 U |
| 1,1-Dichloroethane | 5 | 0.5 U | 0.5 U | 0.5 U | 0.5 U | 0.5 U | 0.5 U | 0.5 U | 0.5 U |
| 1,2-Dichloroethene (total) | 5 | 0.5 U | 0.5 U | 0.5 U | 0.5 U | 0.5 U | 0.5 U | 0.5 U | 0.5 U |
| Chloroform | 5 | 0.5 U | 0.5 U | 0.5 U | 0.5 U | 0.5 U | 0.5 U | 0.5 U | 0.5 U |
| 1,2-Dichloroethane | 5 | 0.5 U | 0.5 U | 0.5 U | 0.5 U | 0.5 U | 0.5 U | 0.5 U | 0.5 U |
| 2-Butanone | 10 | 1 U | 1 U | 1 U | 1 U | 1 U | 1 U | 1 U | 1 U |
| 1,1,1-Trichloroethane | 5 | 0.5 U | 0.5 U | 0.5 U | 0.5 U | 0.5 U | 0.5 U | 0.5 U | 0.5 U |
| Carbon Tetrachloride | 5 | 0.5 U | 0.5 U | 0.5 U | 0.5 U | 0.5 U | 0.5 U | 0.5 U | 0.5 U |
| Vinyl Acetate | 10 | 1 U | 1 U | 1 U | 1 U | 1 U | 1 U | 1 U | 1 U |
| Bromodichloromethane | 5 | 0.5 U | 0.5 U | 0.5 U | 0.5 U | 0.5 U | 0.5 U | 0.5 U | 0.5 U |
| 1,2-Dichloropropane | 5 | 0.5 U | 0.5 U | 0.5 U | 0.5 U | 0.5 U | 0.5 U | 0.5 U | 0.5 U |
| cis-1,3-Dichloropropene | 5 | 0.5 U | 0.5 U | 0.5 U | 0.5 U | 0.5 U | 0.5 U | 0.5 U | 0.5 U |
| Trichloroethene | 5 | 0.5 U | 0.5 U | 0.5 U | 0.5 U | 0.5 U | 0.5 U | 0.5 U | 0.5 |
| Dibromochloromethane | 5 | 0.5 U | 0.5 U | 0.5 U | 0.5 U | 0.5 U | 0.5 U | 0.5 U | 0.5 U |
| 1,1,2-Trichloroethane | 5 | 0.5 U | 0.5 U | 0.5 U | 0.5 U | 0.5 U | 0.5 U | 0.5 U | 0.5 U |
| Benzene | 5 | 0.5 U | 0.5 U | 0.5 U | 0.5 U | 0.5 U | 0.5 U | 0.5 U | 0.5 U |
| trans-1,3-Dichloropropene | 5 | 0.5 U | 0.5 U | 0.5 U | 0.5 U | 0.5 U | 0.5 U | 0.5 U | 0.5 U |
| Bromoform | 5 | 0.5 U | 0.5 U | 0.5 U | 0.5 U | 0.5 U | 0.5 U | 0.5 U | 0.5 U |
| 4-Methyl-2-Pentanone | 10 | 1 U | 1 U | 1 U | 1 U | 1 U | 1 U | 1 U | 1 U |
| 2-Hexanone | 10 | 1 U | 1 U | 1 U | 1 U | 1 U | 1 U | 1 U | 1 U |
| Tetrachloroethene | 5 | 0.5 U | 0.5 U | 0.5 U | 0.5 U | 0.5 U | 0.5 U | 0.5 U | 0.5 U |
| 1,1,2,2-Tetrachloroethane | 5 | 0.5 U | 0.5 U | 0.5 U | 0.5 U | 0.5 U | 0.5 U | 0.5 U | 0.5 U |
| Toluene | 5 | 0.5 U | 0.5 U | 0.5 U | 0.5 U | 0.5 U | 0.5 U | 0.5 U | 0.5 U |
| Chlorobenzene | 5 | 0.5 U | 0.5 U | 0.5 U | 0.5 U | 0.5 U | 0.5 U | 0.5 U | 0.5 U |
| Ethylbenzene | 5 | 0.5 U | 0.5 U | 0.5 U | 0.5 U | 0.5 U | 0.5 U | 0.5 U | 0.5 U |
| Styrene | 5 | 0.5 U | 0.5 U | 0.5 U | 0.5 U | 0.5 U | 0.5 U | 0.5 U | 0.5 U |
| Total Xylenes | 5 | 0.5 U | 0.5 U | 0.5 U | 0.5 U | 0.5 U | 0.5 U | 0.5 U | 0.5 U |
| Dilution Factor: | | 1.0 | 1.0 | 1.0 | 1.0 | 1.0 | 1.0 | 1.0 | 1.0 |
| Associated Method Blank: | | 79584 | 901007318AB | 901007318AB | 901007318AB | 901007318AB | 901007318AB | 901007318AB | 79584 |
| Associated Equipment Blank: | | - | - | - | - | - | - | - | - |
| Associated Field Blank: | | - | - | - | - | - | - | - | - |
| Associated Trip Blank: | | 0BQTXX2XXX01XX | 0BQTXX1XXX01XX | 0BQTXX1XXX01XX | 0BQTXX1XXX01XX | 0BQTXX1XXX01XX | 0BQTXX1XXX01XX | 0BQTXX1XXX01XX | 0BQTXX2XXX01XX |

Table 2
Validation / Summary Table

| SAMPLE LOCATION: | | OBDWXX7XXX02XX | | OBDWXX8XXX01XX | | OBDWXX9XXX01XX | |
|---|---|---|---|---|---|---|---|
| LAB NUMBER: | | 42105 | | 901007315A | | 901007302A | |
| DATE SAMPLED: | | 01/16/91 | | 10/03/90 | | 10/03/90 | |
| DATE ANALYZED: | | 01/23/91 | | 10/10/90 | | 10/09/90 | |
| ANALYTE | CRQL | | | | | | |
| Chloromethane | 10 | 1 | U | 1 | U | 1 | U |
| Bromomethane | 10 | 1 | U | 1 | U | 1 | U |
| Vinyl Chloride | 10 | 1 | U | 1 | U | 1 | U |
| Chloroethane | 10 | 1 | U | 1 | U | 1 | U |
| Methylene Chloride | 5 | 0.1 | U | 0.9 | U | 1 | UJ |
| Acetone | 10 | 1 | U | 1 | U | 1 | U |
| Carbon Disulfide | 5 | 0.5 | U | 0.5 | U | 0.5 | U |
| 1,1-Dichloroethene | 5 | 0.5 | U | 0.5 | U | 0.5 | U |
| 1,1-Dichloroethane | 5 | 0.5 | U | 0.5 | U | 0.5 | U |
| 1,2-Dichloroethene (total) | 5 | 0.5 | U | 0.5 | U | 0.5 | U |
| Chloroform | 5 | 0.5 | U | 0.5 | U | 0.5 | U |
| 1,2-Dichloroethane | 5 | 0.5 | U | 0.5 | U | 0.5 | U |
| 2-Butanone | 10 | 1 | U | 1 | U | 1 | U |
| 1,1,1-Trichloroethane | 5 | 0.5 | U | 0.5 | U | 0.5 | U |
| Carbon Tetrachloride | 5 | 0.5 | U | 0.5 | U | 0.5 | U |
| Vinyl Acetate | 10 | 1 | U | 1 | U | 1 | U |
| Bromodichloromethane | 5 | 0.5 | U | 0.5 | U | 0.5 | U |
| 1,2-Dichloropropane | 5 | 0.5 | U | 0.5 | U | 0.5 | U |
| cis-1,3-Dichloropropene | 5 | 0.5 | U | 0.5 | U | 0.5 | U |
| Trichloroethene | 5 | 0.5 | U | 0.5 | U | 0.5 | U |
| Dibromochloromethane | 5 | 0.5 | U | 0.5 | U | 0.5 | U |
| 1,1,2-Trichloroethane | 5 | 0.5 | U | 0.5 | U | 0.5 | U |
| Benzene | 5 | 0.5 | U | 0.5 | U | 0.5 | U |
| trans-1,3-Dichloropropene | 5 | 0.5 | U | 0.5 | U | 0.5 | U |
| Bromoform | 5 | 0.5 | U | 0.5 | U | 0.5 | U |
| 4-Methyl-2-Pentanone | 10 | 1 | U | 1 | U | 1 | U |
| 2-Hexanone | 10 | 0.2 | UJ | 1 | UJ | 1 | U |
| Tetrachloroethene | 5 | 0.5 | U | 0.5 | U | 0.5 | U |
| 1,1,2,2-Tetrachloroethane | 5 | 0.5 | U | 0.5 | U | 0.5 | U |
| Toluene | 5 | 0.5 | U | 0.5 | U | 0.5 | U |
| Chlorobenzene | 5 | 0.5 | U | 0.5 | U | 0.5 | U |
| Ethylbenzene | 5 | 0.5 | U | 0.5 | U | 0.5 | U |
| Styrene | 5 | 0.5 | U | 0.5 | U | 0.5 | U |
| Total Xylenes | 5 | 0.5 | U | 0.5 | U | 0.5 | U |
| Dilution Factor: | | 1.0 | | 1.0 | | 1.0 | |

| | | | |
|---|---|---|---|
| Associated Method Blank: | V7539 | 901007319AB | 901007318AB |
| Associated Equipment Blank: | - | - | - |
| Associated Field Blank: | - | - | - |
| Associated Trip Blank: | OBQTXX1XXX02XX | OBQTXX1XXX01XX | OBQTXX1XXX01XX |

PROJECT: Naval Air Station Brunswick - Round 5 Volatile Organic Aqueous Analysis (ug/L) 03/14/91

Table 2
Validation / Summary Table

| SAMPLE LOCATION: | | OBDWX10XXX01XX | OBDWX11XXX01XX | OBDWX12XXX01XX | OBDWX13XXX01XX | OBDWX14XXX01XX | OBDWX15XXX01XX | OBDWX16XXX01XD | OBDWX16XXX01XX |
|---|---|---|---|---|---|---|---|---|---|
| LAB NUMBER: | | 901007309A | 901007316A | 901007304A | 901016603A | 901007303A | 901016608A | 901007314D | 901007311E |
| DATE SAMPLED: | | 10/03/90 | 10/03/90 | 10/03/90 | 10/10/90 | 10/03/90 | 10/10/90 | 10/03/90 | 10/03/90 |
| DATE ANALYZED: | | 10/09/90 | 10/10/90 | 10/09/90 | 10/17/90 | 10/09/90 | 10/17/90 | 10/10/90 | 10/10/90 |
| ANALYTE | CRQL | | | | | | | | |
| Chloromethane | 10 | 1 U | 1 U | 1 U | 1 U | 1 U | 1 U | 1 U | 1 U |
| Bromomethane | 10 | 1 U | 1 U | 1 U | 1 U | 1 U | 1 U | 1 U | 1 U |
| Vinyl Chloride | 10 | 1 U | 1 U | 1 U | 1 U | 1 U | 1 U | 1 U | 1 U |
| Chloroethane | 10 | 1 U | 1 U | 1 U | 1 U | 1 U | 1 U | 1 U | 1 U |
| Methylene Chloride | 5 | 1 UJ | 0.6 U | 1 UJ | 0.5 U | 1 UJ | 0.5 U | 0.7 U | 1 U |
| Acetone | 10 | 1 U | 1 U | 1 U | 1 U | 1 U | 1 U | 1 U | 1 U |
| Carbon Disulfide | 5 | 0.5 U | 0.5 U | 0.5 U | 0.5 U | 0.5 U | 0.5 U | 0.5 U | 0.5 U |
| 1,1-Dichloroethene | 5 | 0.5 U | 0.5 U | 0.5 U | 0.5 U | 0.5 U | 0.5 U | 0.5 U | 0.5 U |
| 1,1-Dichloroethane | 5 | 0.5 U | 0.5 U | 0.5 U | 0.5 U | 0.5 U | 0.5 U | 0.5 U | 0.5 U |
| 1,2-Dichloroethene (total) | 5 | 0.5 U | 0.5 U | 0.5 U | 0.5 U | 0.5 U | 0.5 U | 0.5 U | 0.5 U |
| Chloroform | 5 | 0.5 U | 0.5 U | 0.5 U | 0.5 U | 0.5 U | 0.5 U | 0.5 U | 0.5 U |
| 1,2-Dichloroethane | 5 | 0.5 U | 0.5 U | 0.5 U | 0.5 U | 0.5 U | 0.5 U | 0.5 U | 0.5 U |
| 2-Butanone | 10 | 1 U | 1 U | 1 U | 1 U | 1 U | 1 U | 1 U | 1 U |
| 1,1,1-Trichloroethane | 5 | 0.5 U | 0.5 U | 0.5 U | 0.5 U | 0.5 U | 0.5 U | 0.5 U | 0.5 U |
| Carbon Tetrachloride | 5 | 0.5 U | 0.5 U | 0.5 U | 0.5 U | 0.5 U | 0.5 U | 0.5 U | 0.5 U |
| Vinyl Acetate | 10 | 1 U | 1 U | 1 U | 1 U | 1 U | 1 U | 1 U | 1 U |
| Bromodichloromethane | 5 | 0.5 U | 0.5 U | 0.5 U | 0.5 U | 0.5 U | 0.5 U | 0.5 U | 0.5 U |
| 1,2-Dichloropropane | 5 | 0.5 U | 0.5 U | 0.5 U | 0.5 U | 0.5 U | 0.5 U | 0.5 U | 0.5 U |
| cis-1,3-Dichloropropene | 5 | 0.5 U | 0.5 U | 0.5 U | 0.5 U | 0.5 U | 0.5 U | 0.5 U | 0.5 U |
| Trichloroethene | 5 | 0.5 U | 0.5 U | 0.5 U | 0.5 U | 0.5 U | 0.5 U | 0.5 U | 0.5 U |
| Dibromochloromethane | 5 | 0.5 U | 0.5 U | 0.5 U | 0.5 U | 0.5 U | 0.5 U | 0.5 U | 0.5 U |
| 1,1,2-Trichloroethane | 5 | 0.5 U | 0.5 U | 0.5 U | 0.5 U | 0.5 U | 0.5 U | 0.5 U | 0.5 U |
| Benzene | 5 | 0.5 U | 0.5 U | 0.5 U | 0.5 U | 0.5 U | 0.5 U | 0.5 U | 0.5 U |
| trans-1,3-Dichloropropene | 5 | 0.5 U | 0.5 U | 0.5 U | 0.5 U | 0.5 U | 0.5 U | 0.5 U | 0.5 U |
| Bromoform | 5 | 0.5 U | 0.5 U | 0.5 U | 0.5 U | 0.5 U | 0.5 U | 0.5 U | 0.5 U |
| 4-Methyl-2-Pentanone | 10 | 1 U | 1 U | 1 U | 1 U | 1 U | 1 U | 1 U | 1 U |
| 2-Hexanone | 10 | 1 U | 1 UJ | 1 U | 1 U | 1 U | 1 U | 1 UJ | 1 UJ |
| Tetrachloroethene | 5 | 0.5 U | 0.5 U | 0.5 U | 0.5 U | 0.5 U | 0.5 U | 0.5 U | 0.5 U |
| 1,1,2,2-Tetrachloroethane | 5 | 0.5 U | 0.5 U | 0.5 U | 0.5 U | 0.5 U | 0.5 U | 0.5 U | 0.5 U |
| Toluene | 5 | 0.5 U | 0.5 U | 0.5 U | 0.5 U | 0.5 U | 0.5 U | 0.5 U | 0.5 U |
| Chlorobenzene | 5 | 0.5 U | 0.5 U | 0.5 U | 0.5 U | 0.5 U | 0.5 U | 0.5 U | 0.5 U |
| Ethylbenzene | 5 | 0.5 U | 0.5 U | 0.5 U | 0.5 U | 0.5 U | 0.5 U | 0.5 U | 0.5 U |
| Styrene | 5 | 0.5 U | 0.5 U | 0.5 U | 0.5 U | 0.5 U | 0.5 U | 0.5 U | 0.5 U |
| Total Xylenes | 5 | 0.5 U | 0.5 U | 0.5 U | 0.5 U | 0.5 U | 0.5 U | 0.5 U | 0.5 U |
| Dilution Factor: | | 1.0 | 1.0 | 1.0 | 1.0 | 1.0 | 1.0 | 1.0 | 1.0 |
| Associated Method Blank: | | 901007318AB | 901007319AB | 901007318AB | 79584 | 901007318AB | 79584 | 901007319AB | 901007319AB |
| Associated Equipment Blank: | | - | - | - | - | - | - | - | - |
| Associated Field Blank: | | - | - | - | - | - | - | - | - |
| Associated Trip Blank: | | OBQTXX1XXX01XX | OBQTXX1XXX01XX | OBQTXX1XXX01XX | OBQTXX2XXX01XX | OBQTXX1XXX01XX | OBQTXX2XXX01XX | OBQTXX1XXX01XX | OBQTXX1XXX01XX |

Table 2
Validation / Summary Table

| SAMPLE LOCATION: | | OBDWX17XXX01XX | OBDWX18XXX01XX | OBDWX19XXX01XX | OBDWX20XXX01XX | OBDWX21XXX01XX | OBDWX22XXX01XX | OBDWX23XXX01XX |
|---|---|---|---|---|---|---|---|---|
| LAB NUMBER: | | 901016602A | 901016604A | 901016607A | 901016606A | 901016609A | 901016601A | 42106 |
| DATE SAMPLED: | | 10/10/90 | 10/10/90 | 10/10/90 | 10/10/90 | 10/10/90 | 10/10/90 | 01/16/91 |
| DATE ANALYZED: | | 10/17/90 | 10/17/90 | 10/17/90 | 10/17/90 | 10/17/92 | 10/17/90 | 01/23/91 |
| ANALYTE | CRQL | | | | | | | |
| Chloromethane | 10 | 1 U | 1 U | 1 U | 1 U | 1 U | 1 U | 1 U |
| Bromomethane | 10 | 1 U | 1 U | 1 U | 1 U | 1 U | 1 U | 1 U |
| Vinyl Chloride | 10 | 1 U | 1 U | 1 U | 1 U | 1 U | 1 U | 1 U |
| Chloroethane | 10 | 1 U | 1 U | 1 U | 1 U | 1 U | 1 U | 1 U |
| Methylene Chloride | 5 | 0.9 U | 0.5 U | 0.5 U | 0.5 U | 0.7 U | 0.6 U | 0.1 U |
| Acetone | 10 | 1 U | 1 U | 1 U | 1 U | 1 U | 1 U | 1 U |
| Carbon Disulfide | 5 | 0.5 U | 0.5 U | 0.5 U | 0.5 U | 0.5 U | 0.5 U | 0.5 U |
| 1,1-Dichloroethene | 5 | 0.5 U | 0.5 U | 0.5 U | 0.5 U | 0.5 U | 0.5 U | 0.5 U |
| 1,1-Dichloroethane | 5 | 0.5 U | 0.5 U | 0.5 U | 0.5 U | 0.5 U | 0.5 U | 0.5 U |
| 1,2-Dichloroethene (total) | 5 | 0.5 U | 0.5 U | 0.5 U | 0.5 U | 0.5 U | 0.5 U | 0.5 U |
| Chloroform | 5 | 0.5 U | 0.5 U | 0.5 U | 0.5 U | 0.5 U | 0.5 U | 0.5 U |
| 1,2-Dichloroethane | 5 | 0.5 U | 0.5 U | 0.5 U | 0.5 U | 0.5 U | 0.5 U | 0.5 U |
| 2-Butanone | 10 | 1 U | 1 U | 1 U | 1 U | 1 U | 1 U | 1 U |
| 1,1,1-Trichloroethane | 5 | 0.5 U | 0.5 U | 0.5 U | 0.5 U | 0.5 U | 0.5 U | 0.5 U |
| Carbon Tetrachloride | 5 | 0.5 U | 0.5 U | 0.5 U | 0.5 U | 0.5 U | 0.5 U | 0.5 U |
| Vinyl Acetate | 10 | 1 U | 1 U | 1 U | 1 U | 1 U | 1 U | 1 U |
| Bromodichloromethane | 5 | 0.5 U | 0.5 U | 0.5 U | 0.5 U | 0.5 U | 0.5 U | 0.5 U |
| 1,2-Dichloropropane | 5 | 0.5 U | 0.5 U | 0.5 U | 0.5 U | 0.5 U | 0.5 U | 0.5 U |
| cis-1,3-Dichloropropene | 5 | 0.5 U | 0.5 U | 0.5 U | 0.5 U | 0.5 U | 0.5 U | 0.5 U |
| Trichloroethene | 5 | 0.5 U | 0.5 U | 0.5 U | 0.5 U | 0.5 U | 0.5 U | 0.5 U |
| Dibromochloromethane | 5 | 0.5 U | 0.5 U | 0.5 U | 0.5 U | 0.5 U | 0.5 U | 0.5 U |
| 1,1,2-Trichloroethane | 5 | 0.5 U | 0.5 U | 0.5 U | 0.5 U | 0.5 U | 0.5 U | 0.5 U |
| Benzene | 5 | 0.5 U | 0.5 U | 0.5 U | 0.5 U | 0.5 U | 0.5 U | 0.5 U |
| trans-1,3-Dichloropropene | 5 | 0.5 U | 0.5 U | 0.5 U | 0.5 U | 0.5 U | 0.5 U | 0.5 U |
| Bromoform | 5 | 0.5 U | 0.5 U | 0.5 U | 0.5 U | 0.5 U | 0.5 U | 0.5 U |
| 4-Methyl-2-Pentanone | 10 | 1 U | 1 U | 1 U | 1 U | 1 U | 1 U | 1 U |
| 2-Hexanone | 10 | 1 U | 1 U | 1 U | 1 U | 1 U | 1 U | 0.2 UJ |
| Tetrachloroethene | 5 | 0.5 U | 0.5 U | 0.5 U | 0.5 U | 0.5 U | 0.5 U | 0.5 U |
| 1,1,2,2-Tetrachloroethane | 5 | 0.5 U | 0.5 U | 0.5 U | 0.5 U | 0.5 U | 0.5 U | 0.5 U |
| Toluene | 5 | 0.5 U | 0.5 U | 0.5 U | 0.5 U | 0.5 U | 0.5 U | 0.5 U |
| Chlorobenzene | 5 | 0.5 U | 0.5 U | 0.5 U | 0.5 U | 0.5 U | 0.5 U | 0.5 U |
| Ethylbenzene | 5 | 0.5 U | 0.5 U | 0.5 U | 0.5 U | 0.5 U | 0.5 U | 0.5 U |
| Styrene | 5 | 0.5 U | 0.5 U | 0.5 U | 0.5 U | 0.5 U | 0.5 U | 0.5 U |
| Total Xylenes | 5 | 0.5 U | 0.5 U | 0.5 U | 0.5 U | 0.5 U | 0.5 U | 0.5 U |
| Dilution Factor: | | 1.0 | 1.0 | 1.0 | 1.0 | 1.0 | 1.0 | 1.0 |
| Associated Method Blank: | | 79584 | 79584 | 79584 | 79584 | 79584 | 79584 | V7539 |
| Associated Equipment Blank: | | - | - | - | - | - | - | - |
| Associated Field Blank: | | - | - | - | - | - | - | - |
| Associated Trip Blank: | | OBQTXX2XXX01XX | OBQTXX2XXX01XX | OBQTXX2XXX01XX | OBQTXX2XXX01XX | OBQTXX2XXX01XX | OBQTXX2XXX01XX | OBQTXX1XXX02XX |

MONITORING WELL DATA

PROJECT: Naval Air Station Brunswick - Round 5 | Volatile Organic Aqueous Analysis (ug/L) | 03/14/91

Table 2
Validation / Summary Table

| SAMPLE LOCATION: | | 01MW207AXX02XX | 01MW207BXX02XX | 01MW209XXX02XX | 01MW224XXX02XD | 01MW224XXX02XX | 01MW229AXX02XX | 01MW229BXX02XX | 01MW230AXX02XX |
|---|---|---|---|---|---|---|---|---|---|
| LAB NUMBER: | | 901110401A | 901110402A | 901110405A | 901106712D | 901106711E | 901110406A | 901110407A | 901109001A |
| DATE SAMPLED: | | 11/09/90 | 11/09/90 | 11/08/90 | 11/07/90 | 11/07/90 | 11/09/90 | 11/09/90 | 11/08/90 |
| DATE ANALYZED: | | 11/13/90 | 11/14/90 | 11/14/90 | 11/09/90 | 11/09/90 | 11/13/90 | 11/13/90 | 11/09/90 |
| ANALYTE | CRQL | | | | | | | | |
| Chloromethane | 10 | 10 U | 10 U | 10 U | 10 U | 10 U | 10 U | 10 U | 10 U |
| Bromomethane | 10 | 10 U | 10 U | 10 U | 10 U | 10 U | 10 U | 10 U | 10 U |
| Vinyl Chloride | 10 | 10 U | 10 U | 10 U | 10 U | 10 U | 10 U | 10 U | 10 U |
| Chloroethane | 10 | 10 U | 10 U | 10 U | 10 U | 10 U | 10 U | 10 U | 10 U |
| Methylene Chloride | 5 | 5 U | 5 U | 5 U | 7 U | 24 U | 8 U | 5 U | 4 JJ |
| Acetone | 10 | 10 U | 10 U | 10 U | 10 U | 10 U | 10 U | 10 U | 10 U |
| Carbon Disulfide | 5 | 5 U | 5 U | 5 U | 5 U | 5 U | 5 U | 5 U | 5 U |
| 1,1-Dichloroethene | 5 | 5 U | 5 U | 5 U | 5 U | 5 U | 5 U | 5 U | 5 U |
| 1,1-Dichloroethane | 5 | 5 U | 5 U | 5 U | 5 U | 5 U | 5 U | 5 U | 5 U |
| 1,2-Dichloroethene (total) | 5 | 5 U | 5 U | 5 U | 5 U | 2 JJ | 5 U | 5 U | 5 U |
| Chloroform | 5 | 5 U | 5 U | 5 U | 5 U | 5 U | 5 U | 5 U | 5 U |
| 1,2-Dichloroethane | 5 | 5 U | 5 U | 5 U | 5 U | 5 U | 5 U | 5 U | 5 U |
| 2-Butanone | 10 | 10 U | 10 U | 10 U | 10 U | 10 U | 10 U | 10 U | 10 U |
| 1,1,1-Trichloroethane | 5 | 5 U | 5 U | 5 U | 33 | 36 | 110 | 5 U | 5 U |
| Carbon Tetrachloride | 5 | 5 U | 5 U | 5 U | 5 U | 5 U | 5 U | 5 U | 5 U |
| Vinyl Acetate | 10 | 10 U | 10 U | 10 U | 10 U | 10 U | 10 U | 10 U | 10 U |
| Bromodichloromethane | 5 | 5 U | 5 U | 5 U | 5 U | 5 U | 5 U | 5 U | 5 U |
| 1,2-Dichloropropane | 5 | 5 U | 5 U | 5 U | 5 U | 5 U | 5 U | 5 U | 5 U |
| cis-1,3-Dichloropropene | 5 | 5 U | 5 U | 5 U | 5 U | 5 U | 5 U | 5 U | 5 U |
| Trichloroethene | 5 | 6 | 5 U | 5 U | 120 | 130 | 57 | 5 U | 5 U |
| Dibromochloromethane | 5 | 5 U | 5 U | 5 U | 5 U | 5 U | 5 U | 5 U | 5 U |
| 1,1,2-Trichloroethane | 5 | 5 U | 5 U | 5 U | 5 U | 5 U | 5 U | 5 U | 5 U |
| Benzene | 5 | 5 U | 5 U | 5 U | 5 U | 5 U | 5 U | 5 U | 5 U |
| trans-1,3-Dichloropropene | 5 | 5 U | 5 U | 5 U | 5 U | 5 U | 5 U | 5 U | 5 U |
| Bromoform | 5 | 5 U | 5 U | 5 U | 5 U | 5 U | 5 U | 5 U | 5 U |
| 4-Methyl-2-Pentanone | 10 | 10 U | 10 U | 10 U | 10 U | 10 U | 10 U | 10 U | 10 U |
| 2-Hexanone | 10 | 10 U | 10 U | 10 U | 10 U | 10 U | 10 U | 10 U | 10 U |
| Tetrachloroethene | 5 | 5 | 5 U | 5 U | 7 | 8 | 5 U | 5 U | 5 U |
| 1,1,2,2-Tetrachloroethane | 5 | 5 U | 5 U | 5 U | 5 U | 5 U | 5 U | 5 U | 5 U |
| Toluene | 5 | 5 U | 5 U | 5 U | 5 U | 5 U | 5 U | 5 U | 5 U |
| Chlorobenzene | 5 | 5 U | 5 U | 5 U | 5 U | 5 U | 5 U | 5 U | 5 U |
| Ethylbenzene | 5 | 5 U | 5 U | 5 U | 5 U | 5 U | 5 U | 5 U | 5 U |
| Styrene | 5 | 5 U | 5 U | 5 U | 5 U | 5 U | 5 U | 5 U | 5 U |
| Total Xylenes | 5 | 5 U | 5 U | 5 U | 5 U | 5 U | 5 U | 5 U | 5 U |
| Dilution Factor: | | 1.0 | 1.0 | 1.0 | 1.0 | 1.0 | 1.0 | 1.0 | 1.0 |
| Associated Method Blank: | | 79894 | 79908 | 79908 | 79865 | 79865 | 79894 | 79894 | 79865 |
| Associated Equipment Blank: | | BNQSXX4XXX02XX | BNQSXX4XXX02XX | BNQSXX4XXX02XX | BNQSXX2XXX02XX | BNQSXX2XXX02XX | BNQSXX4XXX02XX | BNQSXX4XXX02XX | - |
| Associated Field Blank: | | - | - | - | - | - | - | - | - |
| Associated Trip Blank: | | - | - | - | - | - | - | - | - |

Table 2
Validation / Summary Table

| SAMPLE LOCATION: | 01MW230BXX02XX | 01MW234XXX02XX | 09MW906XXX02XX | 11MW1103XX02XX | 13MW1303XX02XX | 13MWGZA3XX02XX |
|---|---|---|---|---|---|---|
| LAB NUMBER: | 901109002A | 901109003A | 901106713A | 901105115A | 901106707A | 901106708A |
| DATE SAMPLED: | 11/08/90 | 11/08/90 | 11/07/90 | 11/06/90 | 11/07/90 | 11/07/90 |
| DATE ANALYZED: | 11/09/90 | 11/13/90 | 11/09/90 | 11/08/90 | 11/09/90 | 11/09/90 |
| ANALYTE / CRQL | | | | | | |
| Chloromethane 10 | 10 U | 25 U | 10 U | 10 U | 10 U | 10 U |
| Bromomethane 10 | 10 U | 25 U | 10 U | 10 U | 10 U | 10 U |
| Vinyl Chloride 10 | 10 U | 25 U | 31 | 10 U | 10 U | 10 U |
| Chloroethane 10 | 10 U | 25 U | 10 U | 10 U | 10 U | 10 U |
| Methylene Chloride 5 | 8 J | 410 J | 5 U | 5 U | 5 U | 12 U |
| Acetone 10 | 10 U | 25 U | 10 U | 10 U | 10 U | 10 U |
| Carbon Disulfide 5 | 5 U | 13 U | 5 U | 5 U | 5 U | 5 U |
| 1,1-Dichloroethene 5 | 5 U | 13 U | 5 U | 6 | 5 U | 5 U |
| 1,1-Dichloroethane 5 | 5 U | 13 U | 5 U | 130 | 5 U | 5 U |
| 1,2-Dichloroethene (total) 5 | 5 U | 13 U | 79 | 680 D | 63 | 5 U |
| Chloroform 5 | 5 U | 13 U | 5 U | 5 U | 5 U | 5 U |
| 1,2-Dichloroethane 5 | 5 U | 13 U | 5 U | 5 U | 5 U | 5 U |
| 2-Butanone 10 | 10 U | 25 U | 10 U | 10 U | 10 U | 10 U |
| 1,1,1-Trichloroethane 5 | 5 U | 13 U | 5 U | 1200 D | 5 U | 5 U |
| Carbon Tetrachloride 5 | 5 U | 13 U | 5 U | 5 U | 5 U | 5 U |
| Vinyl Acetate 10 | 10 U | 25 U | 10 U | 10 U | 10 U | 10 U |
| Bromodichloromethane 5 | 5 U | 13 U | 5 U | 5 U | 5 U | 5 U |
| 1,2-Dichloropropane 5 | 5 U | 13 U | 5 U | 5 U | 5 U | 5 U |
| cis-1,3-Dichloropropene 5 | 5 U | 13 U | 5 U | 5 U | 5 U | 5 U |
| Trichloroethene 5 | 5 U | 13 U | 5 U | 770 D | 2 JJ | 2 JJ |
| Dibromochloromethane 5 | 5 U | 13 U | 5 U | 5 U | 5 U | 5 U |
| 1,1,2-Trichloroethane 5 | 5 U | 13 U | 5 U | 5 U | 5 U | 5 U |
| Benzene 5 | 5 U | 4 JJ | 5 U | 5 U | 4 JJ | 5 U |
| trans-1,3-Dichloropropene 5 | 5 U | 13 U | 5 U | 5 U | 5 U | 5 U |
| Bromoform 5 | 5 U | 13 U | 5 U | 5 U | 5 U | 5 U |
| 4-Methyl-2-Pentanone 10 | 10 U | 25 U | 10 U | 10 U | 10 U | 10 U |
| 2-Hexanone 10 | 10 U | 25 U | 10 U | 10 U | 10 U | 10 U |
| Tetrachloroethene 5 | 5 U | 13 U | 5 U | 42 | 5 U | 5 U |
| 1,1,2,2-Tetrachloroethane 5 | 5 U | 13 U | 5 U | 5 U | 5 U | 5 U |
| Toluene 5 | 5 U | 380 | 5 U | 5 U | 5 U | 5 U |
| Chlorobenzene 5 | 5 U | 13 U | 5 U | 5 U | 5 U | 5 U |
| Ethylbenzene 5 | 5 U | 82 | 5 U | 5 U | 5 U | 5 U |
| Styrene 5 | 5 U | 13 U | 5 U | 5 U | 5 U | 5 U |
| Total Xylenes 5 | 5 U | 430 | 5 U | 5 U | 1 JJ | 5 U |
| Dilution Factor: | 1.0 | 2.5 | 1.0 | 1.0 | 1.0 | 1.0 |
| Associated Method Blank: | 79865 | 79894 | 79865 | 79850 | 79865 | 79865 |
| Associated Equipment Blank: | - | - | BNQSXX2XXX02XX | BNQSXX1XXX02XX | BNQSXX2XXX02XX | BNQSXX2XXX02XX |
| Associated Field Blank: | - | - | - | - | - | - |
| Associated Trip Blank: | - | - | - | TRIPBLANK | - | - |

Table 2
Validation / Summary Table

| SAMPLE LOCATION: | | 01MW234XXX02XX | | 08MW812XXX05XX | | 08MW813XXX05XX | | 08MW814XXX05XX | |
|---|---|---|---|---|---|---|---|---|---|
| LAB NUMBER: | | 901109201A | | 900825001D | | 900825002D | | 900825003D | |
| DATE SAMPLED: | | 11/08/90 | | 08/16/90 | | 08/16/90 | | 08/16/90 | |
| DATE EXTRACTED: | | 11/12/90 | | 08/21/90 | | 08/21/90 | | 08/21/90 | |
| DATE ANALYZED: | | 11/20/90 | | 08/30/90 | | 08/30/90 | | 08/30/90 | |
| ANALYTE | CRQL | | | | | | | | |
| Phenol | 10 | 170 | D | 10 | U | 11 | U | 10 | U |
| bis(2-Chloroethyl)ether | 10 | 10 | U | 10 | U | 11 | U | 10 | U |
| 2-Chlorophenol | 10 | 10 | U | 10 | U | 11 | U | 10 | U |
| 1,3-Dichlorobenzene | 10 | 10 | U | 10 | U | 11 | U | 10 | U |
| 1,4-Dichlorobenzene | 10 | 27 | | 10 | U | 11 | U | 10 | U |
| Benzyl Alcohol | 10 | 10 | U | 10 | U | 11 | U | 10 | U |
| 1,2-Dichlorobenzene | 10 | 10 | U | 10 | U | 11 | U | 10 | U |
| 2-Methylphenol | 10 | 230 | D | 10 | U | 11 | U | 10 | U |
| bis(2-Chloroisopropyl)ether | 10 | 10 | U | 10 | U | 11 | U | 10 | U |
| 4-Methylphenol | 10 | 140 | | 10 | U | 11 | U | 10 | U |
| N-Nitroso-di-n-propylamine | 10 | 10 | U | 10 | U | 11 | U | 10 | U |
| Hexachloroethane | 10 | 10 | U | 10 | U | 11 | U | 10 | U |
| Nitrobenzene | 10 | 10 | U | 10 | U | 11 | U | 10 | U |
| Isophorone | 10 | 10 | U | 10 | U | 11 | U | 10 | U |
| 2-Nitrophenol | 10 | 10 | U | 10 | U | 11 | U | 10 | U |
| 2,4-Dimethylphenol | 10 | 12 | | 10 | U | 11 | U | 10 | U |
| Benzoic Acid | 50 | 550 | EJ | 50 | U | 53 | U | 50 | U |
| bis(2-Chloroethoxy)methane | 10 | 10 | U | 10 | U | 11 | U | 10 | U |
| 2,4-Dichlorophenol | 10 | 10 | U | 10 | U | 11 | U | 10 | U |
| 1,2,4-Trichlorobenzene | 10 | 10 | U | 10 | U | 11 | U | 10 | U |
| Naphthalene | 10 | 22 | | 10 | U | 11 | U | 10 | U |
| 4-Chloroaniline | 10 | 10 | U | 10 | U | 11 | U | 10 | U |
| Hexachlorobutadiene | 10 | 10 | U | 10 | U | 11 | U | 10 | U |
| 4-Chloro-3-Methylphenol | 10 | 10 | U | 10 | U | 11 | U | 10 | U |
| 2-Methylnaphthalene | 10 | 5 | JJ | 10 | U | 11 | U | 10 | U |
| Hexachlorocyclopentadiene | 10 | 10 | UJ | 10 | U | 11 | U | 10 | U |
| 2,4,6-Trichlorophenol | 10 | 10 | U | 10 | U | 11 | U | 10 | U |
| 2,4,5-Trichlorophenol | 50 | 50 | U | 50 | U | 53 | U | 50 | U |
| 2-Chloronaphthalene | 10 | 10 | U | 10 | U | 11 | U | 10 | U |
| 2-Nitroaniline | 50 | 50 | U | 50 | U | 53 | U | 50 | U |
| Dimethylphthalate | 10 | 10 | U | 10 | U | 11 | U | 10 | U |
| Acenaphthylene | 10 | 10 | U | 10 | U | 11 | U | 10 | U |
| 2,6-Dinitrotoluene | 10 | 10 | U | 10 | U | 11 | U | 10 | U |

Table 2
Validation / Summary Table

| SAMPLE LOCATION: | 01MW234XXX02XX | 08MW812XXX05XX | 08MW813XXX05XX | 08MW814XXX05XX |
|---|---|---|---|---|
| LAB NUMBER: | 901109201A | 900825001D | 900825002D | 900825003D |
| DATE SAMPLED: | 11/08/90 | 08/16/90 | 08/16/90 | 08/16/90 |
| DATE EXTRACTED: | 11/12/90 | 08/21/90 | 08/21/90 | 08/21/90 |
| DATE ANALYZED: | 11/20/90 | 08/30/90 | 08/30/90 | 08/30/90 |

| ANALYTE | CRQL | | | | | | | |
|---|---|---|---|---|---|---|---|---|
| 3-Nitroaniline | 50 | 50 | U | 50 | U | 53 | U | 50 | U |
| Acenaphthene | 10 | 10 | U | 10 | U | 11 | U | 10 | U |
| 2,4-Dinitrophenol | 50 | 50 | U | 50 | U | 53 | U | 50 | U |
| 4-Nitrophenol | 50 | 50 | UJ | 50 | U | 53 | U | 50 | U |
| Dibenzofuran | 10 | 10 | U | 10 | U | 11 | U | 10 | U |
| 2,4-Dinitrotoluene | 10 | 10 | U | 10 | U | 11 | U | 10 | U |
| Diethylphthalate | 10 | 4 | JJ | 10 | U | 11 | U | 10 | U |
| 4-Chlorophenyl-phenylether | 10 | 10 | U | 10 | U | 11 | U | 10 | U |
| Fluorene | 10 | 10 | U | 10 | U | 11 | U | 10 | U |
| 4-Nitroaniline | 50 | 50 | U | 50 | U | 53 | U | 50 | U |
| 4,6-Dinitro-2-methylphenol | 50 | 50 | U | 50 | U | 53 | U | 50 | U |
| N-Nitrosodiphenylamine | 10 | 1 | JJ | 10 | U | 11 | U | 10 | U |
| 4-Bromophenyl-phenylether | 10 | 10 | U | 10 | U | 11 | U | 10 | U |
| Hexachlorobenzene | 10 | 10 | U | 10 | U | 11 | U | 10 | U |
| Pentachlorophenol | 50 | 50 | U | 50 | U | 53 | U | 50 | U |
| Phenanthrene | 10 | 10 | U | 10 | U | 11 | U | 10 | U |
| Anthracene | 10 | 10 | U | 10 | U | 11 | U | 10 | U |
| Di-n-butylphthalate | 10 | 0.3 | JJ | 10 | U | 11 | U | 10 | U |
| Fluoranthene | 10 | 10 | U | 10 | U | 11 | U | 10 | U |
| Pyrene | 10 | 10 | U | 10 | U | 11 | U | 10 | U |
| Butylbenzylphthalate | 10 | 10 | U | 10 | U | 11 | U | 10 | U |
| 3,3'-Dichlorobenzidine | 20 | 20 | U | 20 | U | 21 | U | 20 | U |
| Benzo(a)Anthracene | 10 | 10 | U | 10 | U | 11 | U | 10 | U |
| Chrysene | 10 | 10 | U | 10 | U | 11 | U | 10 | U |
| bis(2-Ethylhexyl)phthalate | 10 | 7 | JJ | 3 | JJ | 11 | U | 10 | U |
| Di-n-octylphthalate | 10 | 10 | U | 10 | U | 11 | U | 10 | U |
| Benzo(b)Fluoranthene | 10 | 10 | U | 10 | U | 11 | U | 10 | U |
| Benzo(k)Fluoranthene | 10 | 10 | U | 10 | U | 11 | U | 10 | U |
| Benzo(a)Pyrene | 10 | 10 | U | 10 | U | 11 | U | 10 | U |
| Indeno(1,2,3-c,d)Pyrene | 10 | 10 | U | 10 | U | 11 | U | 10 | U |
| Dibenz(a,h)Anthracene | 10 | 10 | U | 10 | U | 11 | U | 10 | U |
| Benzo(g,h,i)perylene | 10 | 10 | U | 10 | U | 11 | U | 10 | U |
| Dilution Factor: | | 1.0 | | 1.0 | | 1.0 | | 1.0 | |

| | | | | |
|---|---|---|---|---|
| Associated Method Blank: | 94526 | 85085 | 85085 | 85085 |
| Associated Equipment Blank: | BNQSXX2XXX02XX | - | - | - |
| Associated Field Blank: | - | - | - | - |

Table 2
Validation / Summary Table

| SAMPLE LOCATION: | | 08MW812XXX05XX | | 08MW813XXX05XX | | 08MW814XXX05XX | | 13MW1303XX02XX | |
|---|---|---|---|---|---|---|---|---|---|
| LAB NUMBER: | | 900825001E | | 900825002E | | 900825003E | | 901106910A | |
| DATE SAMPLED: | | 08/16/90 | | 08/16/90 | | 08/16/90 | | 11/07/90 | |
| DATE EXTRACTED: | | 08/21/90 | | 08/21/90 | | 08/21/90 | | 11/11/90 | |
| DATE ANALYZED: | | 09/19/90 | | 09/19/90 | | 09/19/90 | | 11/16/90 | |
| ANALYTE | CRQL | | | | | | | | |
| alpha-BHC | 0.05 | 0.052 | U | 0.05 | U | 0.051 | U | 0.053 | U |
| beta-BHC | 0.05 | 0.052 | U | 0.05 | U | 0.051 | U | 0.053 | U |
| delta-BHC | 0.05 | 0.052 | U | 0.05 | U | 0.051 | U | 0.053 | U |
| gamma-BHC (Lindane) | 0.05 | 0.052 | U | 0.05 | U | 0.051 | U | 0.053 | U |
| Heptachlor | 0.05 | 0.052 | U | 0.05 | U | 0.051 | U | 0.053 | U |
| Aldrin | 0.05 | 0.052 | U | 0.05 | U | 0.051 | U | 0.053 | U |
| Heptachlor Epoxide | 0.05 | 0.052 | U | 0.05 | U | 0.051 | U | 0.053 | U |
| Endosulfan I | 0.05 | 0.052 | U | 0.05 | U | 0.051 | U | 0.053 | U |
| Dieldrin | 0.1 | 0.1 | U | 0.1 | U | 0.1 | U | 0.11 | U |
| 4,4'-DDE | 0.1 | 0.1 | U | 0.1 | U | 0.1 | U | 0.11 | U |
| Endrin | 0.1 | 0.1 | U | 0.1 | U | 0.1 | U | 0.11 | U |
| Endosulfan II | 0.1 | 0.1 | U | 0.1 | U | 0.1 | U | 0.11 | U |
| 4,4'-DDD | 0.1 | 0.1 | U | 0.1 | U | 0.1 | U | 0.11 | U |
| Endosulfan Sulfate | 0.1 | 0.1 | U | 0.1 | U | 0.1 | U | 0.11 | U |
| 4,4'-DDT | 0.1 | 0.1 | U | 0.1 | U | 0.1 | U | 0.11 | U |
| Methoxychlor | 0.5 | 0.52 | U | 0.5 | U | 0.51 | U | 0.53 | U |
| Endrin Ketone | 0.1 | 0.1 | U | 0.1 | U | 0.1 | U | 0.11 | U |
| alpha-Chlordane | 0.5 | 0.52 | U | 0.5 | U | 0.51 | U | 0.53 | U |
| gamma-Chlordane | 0.5 | 0.52 | U | 0.5 | U | 0.51 | U | 0.53 | U |
| Toxaphene | 1 | 1 | U | 1 | U | 1 | U | 1.1 | U |
| Aroclor-1016 | 0.5 | 0.52 | U | 0.5 | U | 0.51 | U | 0.53 | U |
| Aroclor-1221 | 0.5 | 0.52 | U | 0.5 | U | 0.51 | U | 0.53 | U |
| Aroclor-1232 | 0.5 | 0.52 | U | 0.5 | U | 0.51 | U | 0.53 | U |
| Aroclor-1242 | 0.5 | 0.52 | U | 0.5 | U | 0.51 | U | 0.53 | U |
| Aroclor-1248 | 0.5 | 0.52 | U | 0.5 | U | 0.51 | U | 0.53 | U |
| Aroclor-1254 | 1 | 1 | U | 1 | U | 1 | U | 1.1 | U |
| Aroclor-1260 | 1 | 1 | U | 1 | U | 1 | U | 1.1 | U |
| Dilution Factor: | | 1.0 | | 1.0 | | 1.0 | | 1.0 | |

| | | | | |
|---|---|---|---|---|
| Associated Method Blank: | 900825009AB | 900825009AB | 900825009AB | 901106911AB |
| Associated Equipment Blank: | - | - | - | BNQSXX1XXX02XX |
| Associated Field Blank: | - | - | - | - |

PROJECT: Naval Air Station Brunswick - Round 5 Inorganic Aqueous Analysis (ug/L) 03/14/91

Table 2
Validation / Summary Table

| SAMPLE LOCATION: | 01MW207AXX02XX | 01MW207BXX02XX | 01MW209XXX02XX | 01MW211BXX02XX | 01MW224XXX02XD | 01MW224XXX02XX | 01MW229AXX02XX | 01MW229BXX02XX |
|---|---|---|---|---|---|---|---|---|
| LAB NUMBER: | 9011107-01 | 9011107-02 | 9011107-05 | 9011094-04 | 9011070-11 | 9011070-10 | 9011107-06 | 9011107-07 |
| DATE SAMPLED: | 11/09/90 | 11/09/90 | 11/08/90 | 11/08/90 | 11/07/90 | 11/07/90 | 11/09/90 | 11/09/90 |
| ANALYTE | CRQL | | | | | | | |
| Aluminum | 200 | 9.9 U | 9.9 U | 9.9 U | 48.9 U | 9.9 U | 9.9 U | 9.9 U | 236 U |
| Antimony | 60 | 42.0 U | 42.0 U | 42.0 U | 42.0 U | 42.0 U | 42.0 U | 42.0 U | 42.0 U |
| Arsenic | 10 | 8.5 [] | 2.6 U | 2.6 U | 2.6 U | 2.6 U | 2.6 U | 2.6 U | 2.6 U |
| Barium | 200 | 2.5 U | 1.9 U | 2.5 U | 12.2 [] | 10.6 [] | 11.2 [] | 1.3 U | 3.0 U |
| Beryllium | 5 | 0.56 U | 0.56 U | 0.56 U | 0.56 U | 0.60 U | 0.60 U | 0.56 U | 0.56 U |
| Cadmium | 5 | 1.4 U | 1.4 U | 1.4 U | 1.4 U | 1.4 U | 1.4 U | 1.4 U | 1.4 U |
| Calcium | 5000 | 7150 | 2790 [] | 3690 [] | 14600 | 6270 | 6290 | 8160 | 5300 |
| Chromium | 10 | 2.3 U | 1.7 U | 1.7 U | 1.7 U | 1.7 U | 1.7 U | 1.7 U | 1.7 U |
| Cobalt | 50 | 2.4 U | 2.4 U | 2.4 U | 2.4 UJ | 4.7 U | 2.4 U | 2.4 U | 2.4 U |
| Copper | 25 | 14.1 U | 5.2 U | 7.1 U | 11.7 U | 6.4 U | 1.8 U | 6.4 U | 13.2 U |
| Iron | 100 | 196 | 205 | 30.2 U | 77.3 U | 11.0 U | 11.0 U | 42.5 U | 311 |
| Lead | 3 | 1.8 U | 2.3 [] | 7.7 | 4.0 U | 1.8 U | 1.8 U | 4.6 | 2.0 [] |
| Magnesium | 5000 | 4290 [] | 1650 [] | 1470 [] | 6910 | 1680 [] | 1670 [] | 4050 [] | 2090 [] |
| Manganese | 15 | 66.2 | 51.3 | 2.4 U | 61.2 | 52.5 | 53.2 | 1.0 U | 67.0 |
| Mercury | 0.2 | 0.20 U | 0.20 U | 0.20 U | 0.20 U | 0.20 U | 0.20 U | 0.20 U | 0.20 U |
| Nickel | 40 | 76.8 | 6.9 U | 6.9 U | 6.9 U | 6.9 U | 6.9 U | 13.3 U | 6.9 U |
| Potassium | 5000 | 2140 [] | 790 U | 161 U | 2940 [] | 1230 U | 1030 U | 1070 U | 1500 U |
| Selenium | 5 | 2.9 U | 2.9 U | 2.9 U | 2.9 UJ | 2.9 U | 2.9 U | 2.9 U | 2.9 U |
| Silver | 10 | 9.1 UJ | 9.1 UJ | 9.1 UJ | 9.1 UJ | 9.1 UJ | 9.1 UJ | 9.1 UJ | 9.1 UJ |
| Sodium | 5000 | 27500 | 7770 | 3990 [] | 8020 | 6520 | 6530 | 5790 | 54000 |
| Thallium | 10 | 1.6 U | 1.6 U | 1.6 U | 1.6 U | 1.6 U | 1.6 U | 1.6 U | 1.6 U |
| Vanadium | 50 | 1.2 U | 1.2 U | 1.2 U | 1.2 U | 1.2 U | 1.2 U | 1.2 U | 1.2 U |
| Zinc | 20 | 132 J | 10.4 U | 10.4 U | 8.9 [] | 11.6 U | 12.2 U | 18.7 U | 10.4 U |
| Cyanide | 10 | 10.0 U | 10.0 U | 10.0 U | 10.0 U | 10.0 U | 10.0 U | 10.0 U | 10.0 U |

| | | | | | | | | |
|---|---|---|---|---|---|---|---|---|
| Associated Method Blank: | BR11107W | BR11107W | BR11107W | BN11064W | BNPMW306W | BNPMW306W | BR11107W | BR11107W |
| Associated Equipment Blank: | BNQSXX4XXX02XX | BNQSXX4XXX02XX | BNQSXX4XXX02XX | BNQSXX3XXX02XX | BNQSXX2XXX02XX | BNQSXX2XXX02XX | BNQSXX4XXX02XX | BNQSXX4XXX02XX |
| Associated Field Blank: | - | - | - | - | - | - | - | - |

Table 2
Validation / Summary Table

| SAMPLE LOCATION: | 01MW230AXX02XX | 01MW230BXX02XX | 01MW234XXX02XX | 08MW811XXX02XX | 08MW812XXX05XX | 08MW813XXX05XX | 08MW814XXX05XX | 09MW906XXX02XX |
|---|---|---|---|---|---|---|---|---|
| LAB NUMBER: | 9011094-01 | 9011094-02 | 9011094-03 | 9011113-01 | 9008250-01 | 9008250-02 | 9008250-03 | 9011070-09 |
| DATE SAMPLED: | 11/08/90 | 11/08/90 | 11/08/90 | 11/12/90 | 08/16/90 | 08/16/90 | 08/16/90 | 11/07/90 |
| ANALYTE / CRQL | | | | | | | | |
| Aluminum 200 | 43.6 U | 251 U | 81.2 U | 19.6 U | 344 | 54.1 [] | 125 [] | 9.9 U |
| Antimony 60 | 42.0 U | 42.0 U | 42.0 U | 42.0 U | 31.7 U | 31.7 U | 31.7 U | 42.0 U |
| Arsenic 10 | 2.6 U | 8.0 []J | 2.6 UJ | 7.4 [] | 2.6 U | 2.6 U | 2.6 U | 2.6 U |
| Barium 200 | 1.8 U | 2.2 U | 90.7 [] | 34.6 [] | 5.2 [] | 2.4 U | 3.2 [] | 6.6 U |
| Beryllium 5 | 0.56 U | 0.56 U | 0.56 U | 0.60 U | 0.58 U | 0.58 U | 0.58 U | 0.60 U |
| Cadmium 5 | 1.4 U | 1.4 U | 1.4 UJ | 1.4 U | 1.8 U | 1.8 U | 1.8 U | 1.4 U |
| Calcium 5000 | 5220 | 6480 | 12700 | 59600 | 12300 | 5910 | 6750 | 10700 |
| Chromium 10 | 2.0 [] | 2.5 [] | 2.4 [] | 1.7 U | 3.5 U | 3.8 U | 1.5 U | 1.7 U |
| Cobalt 50 | 2.4 UJ | 2.4 UJ | 7.8 [] | 3.7 U | 8.6 U | 4.8 U | 4.8 U | 2.4 U |
| Copper 25 | 3.8 U | 10.8 U | 17.8 U | 5.2 U | 2.3 U | 2.3 U | 2.3 U | 4.3 U |
| Iron 100 | 580 | 338 U | 87300 | 44800 | 393 | 107 | 210 | 115 |
| Lead 3 | 2.8 U | 4.3 U | 2.3 U | 1.8 U | 1.8 U | 1.8 U | 3.2 | 1.8 U |
| Magnesium 5000 | 3090 [] | 3280 [] | 1120 [] | 27600 | 3140 [] | 2160 [] | 2540 [] | 3420 [] |
| Manganese 15 | 266 | 159 | 652 | 9100 | 436 | 7.7 [] | 324 | 52.5 |
| Mercury 0.2 | 0.20 U | 0.20 U | 0.20 U | 0.20 U | 0.20 U | 0.20 U | 0.20 U | 0.20 U |
| Nickel 40 | 6.9 U | 24.0 U | 18.7 U | 6.9 U | 7.1 U | 5.1 U | 5.1 U | 6.9 U |
| Potassium 5000 | 1330 [] | 1840 [] | 2620 [] | 5080 | 2310 [] | 1210 U | 2570 [] | 1970 [] |
| Selenium 5 | 2.9 U | 2.9 U | 29.0 UJ | 29.0 UJ | 2.9 U | 2.9 U | 2.9 U | 2.9 U |
| Silver 10 | 9.1 UJ | 9.1 UJ | 9.4 []J | 9.1 UJ | 1.2 U | 1.2 U | 1.2 U | 9.1 UJ |
| Sodium 5000 | 4910 [] | 21900 | 2710 [] | 33800 | 29000 | 4980 [] | 14800 | 35100 |
| Thallium 10 | 1.6 U | 1.6 U | 1.6 U | 1.6 U | 1.6 U | 1.6 U | 1.6 U | 1.6 U |
| Vanadium 50 | 1.2 U | 1.4 U | 1.2 U | 1.2 U | 1.4 U | 1.4 U | 2.8 [] | 1.2 U |
| Zinc 20 | 1.7 [] | 11.9 [] | 31.2 | 17.2 U | 1.9 U | 3.4 U | 7.0 U | 13.3 U |
| Cyanide 10 | 10.0 U | 10.0 U | 10.0 U | 10.0 U | 10.0 U | 10.0 U | 10.0 U | 10.0 U |
| Associated Method Blank: | BN11064W | BN11064W | BN11064W | BNPMW306W | BR9008261 | BR9008261 | BR9008261 | BNPMW306W |
| Associated Equipment Blank: | BNQSXX3XXX02XX | BNQSXX3XXX02XX | BNQSXX3XXX02XX | - | - | - | - | BNQSXX2XXX02XX |
| Associated Field Blank: | - | - | - | - | - | - | - | - |

Table 2
Validation / Summary Table

| SAMPLE LOCATION: | 11MW1103XX02XX | 13MW1303XX02XX | 13MWGZA3XX02XX |
|---|---|---|---|
| LAB NUMBER: | 9011064-12 | 9011070-13 | 9011070-14 |
| DATE SAMPLED: | 11/06/90 | 11/07/90 | 11/07/90 |

| ANALYTE | CRQL | | | | | |
|---|---|---|---|---|---|---|
| Aluminum | 200 | 9.9 | U | 10.4 | U | 9.9 | U |
| Antimony | 60 | 42.0 | U | 42.0 | U | 42.0 | U |
| Arsenic | 10 | 3.6 | [] | 2.6 | U | 2.6 | U |
| Barium | 200 | 8.1 | [] | 68.7 | [] | 7.4 | U |
| Beryllium | 5 | 0.56 | U | 0.60 | U | 0.60 | U |
| Cadmium | 5 | 1.4 | U | 1.4 | U | 1.4 | U |
| Calcium | 5000 | 4640 | [] | 9200 | | 9310 | |
| Chromium | 10 | 1.7 | U | 1.7 | U | 1.7 | U |
| Cobalt | 50 | 4.2 | [] | 8.5 | U | 2.6 | U |
| Copper | 25 | 1.4 | U | 2.8 | U | 7.1 | U |
| Iron | 100 | 9190 | | 208 | | 33.1 | [] |
| Lead | 3 | 2.7 | U | 5.4 | | 1.8 | U |
| Magnesium | 5000 | 1230 | [] | 2290 | [] | 1760 | [] |
| Manganese | 15 | 991 | | 2200 | | 2.8 | U |
| Mercury | 0.2 | 0.20 | U | 0.20 | U | 0.20 | U |
| Nickel | 40 | 6.9 | U | 6.9 | U | 6.9 | U |
| Potassium | 5000 | 2740 | [] | 3040 | [] | 741 | U |
| Selenium | 5 | 2.9 | UJ | 2.9 | U | 2.9 | U |
| Silver | 10 | 9.1 | UJ | 9.1 | UJ | 9.1 | UJ |
| Sodium | 5000 | 3360 | [] | 15300 | | 4050 | [] |
| Thallium | 10 | 1.6 | U | 1.6 | U | 1.6 | U |
| Vanadium | 50 | 1.2 | U | 1.2 | U | 1.2 | U |
| Zinc | 20 | 1.7 | U | 13.3 | U | 13.3 | U |
| Cyanide | 10 | 10.0 | U | 10.0 | U | 10.0 | U |

| | | | |
|---|---|---|---|
| Associated Method Blank: | BN11064W | BNPMW306W | BNPMW306W |
| Associated Equipment Blank: | BNQSXX1XXX02XX | BNQSXX2XXX02XX | BNQSXX2XXX02XX |
| Associated Field Blank: | - | - | - |

PROJECT: Naval Air Station Brunswick - Round 5 | Volatile Organic Aqueous Analysis (ug/L) | 03/14/91

Table 2
Validation / Summary Table

| SAMPLE LOCATION: | EPMW301XXX02XD | EPMW301XXX02XX | EPMW302XXX02XX | EPMW303XXX02XX | EPMW304XXX02XX | EPMW305XXX02XX | EPMW306XXX02XD | EPMW306XXX02XX |
|---|---|---|---|---|---|---|---|---|
| LAB NUMBER: | 901105103D | 901105102E | 901105106A | 901105107A | 901105108A | 901105109A | 901106702D | 901106701E |
| DATE SAMPLED: | 11/05/90 | 11/05/90 | 11/06/90 | 11/06/90 | 11/06/90 | 11/06/90 | 11/07/90 | 11/07/90 |
| DATE ANALYZED: | 11/07/90 | 11/07/90 | 11/07/90 | 11/07/90 | 11/07/90 | 11/07/90 | 11/08/90 | 11/08/90 |
| ANALYTE | CRQL | | | | | | | |
| Chloromethane | 10 | 2 U | 2 U | 2 U | 2 U | 2 U | 2 U | 2 U | 2 U |
| Bromomethane | 10 | 2 U | 2 U | 2 U | 2 U | 2 U | 2 U | 2 U | 2 U |
| Vinyl Chloride | 10 | 2 U | 2 U | 2 U | 2 U | 2 U | 2 U | 2 U | 2 U |
| Chloroethane | 10 | 2 U | 2 U | 2 U | 2 U | 2 U | 2 U | 2 U | 2 U |
| Methylene Chloride | 5 | 2 U | 2 U | 8 U | 18 U | 16 U | 12 U | 16 U | 15 U |
| Acetone | 10 | 5 U | 5 U | 5 U | 5 U | 5 U | 5 U | 5 U | 5 U |
| Carbon Disulfide | 5 | 3 U | 3 U | 3 U | 3 U | 3 U | 3 U | 3 U | 3 U |
| 1,1-Dichloroethene | 5 | 2 U | 2 U | 2 U | 2 U | 2 U | 2 U | 95 | 110 |
| 1,1-Dichloroethane | 5 | 2 U | 2 U | 2 U | 2 U | 1 JJ | 2 U | 160 | 170 |
| 1,2-Dichloroethene (total) | 5 | 2 U | 2 U | 2 U | 2 U | 2 U | 2 U | 93 | 98 |
| Chloroform | 5 | 2 U | 2 U | 5 U | 2 U | 2 U | 2 U | 2 U | 2 U |
| 1,2-Dichloroethane | 5 | 2 U | 2 U | 2 U | 2 U | 2 U | 2 U | 2 U | 2 U |
| 2-Butanone | 10 | 5 U | 5 U | 5 U | 5 U | 5 U | 5 U | 5 U | 5 U |
| 1,1,1-Trichloroethane | 5 | 2 U | 2 U | 2 U | 2 U | 13 | 2 U | 2300 D | 2300 D |
| Carbon Tetrachloride | 5 | 2 U | 2 U | 2 U | 2 U | 2 U | 2 U | 2 U | 2 U |
| Vinyl Acetate | 10 | 5 U | 5 U | 5 U | 5 U | 5 U | 5 U | 5 U | 5 U |
| Bromodichloromethane | 5 | 2 U | 2 U | 2 U | 2 U | 2 U | 2 U | 2 U | 2 U |
| 1,2-Dichloropropane | 5 | 2 U | 2 U | 2 U | 2 U | 2 U | 2 U | 2 U | 2 U |
| cis-1,3-Dichloropropene | 5 | 2 U | 2 U | 2 U | 2 U | 2 U | 2 U | 2 U | 2 U |
| Trichloroethene | 5 | 2 U | 2 U | 2 U | 2 U | 5 | 2 U | 1200 D | 1200 D |
| Dibromochloromethane | 5 | 2 U | 2 U | 2 U | 2 U | 2 U | 2 U | 2 U | 2 U |
| 1,1,2-Trichloroethane | 5 | 2 U | 2 U | 2 U | 2 U | 2 U | 2 U | 3 JJ | 3 JJ |
| Benzene | 5 | 2 U | 2 U | 2 U | 2 U | 2 U | 2 U | 2 U | 2 U |
| trans-1,3-Dichloropropene | 5 | 1 U | 1 U | 1 U | 1 U | 1 U | 1 U | 1 U | 1 U |
| Bromoform | 5 | 2 U | 2 U | 2 U | 2 U | 2 U | 2 U | 2 U | 2 U |
| 4-Methyl-2-Pentanone | 10 | 2 U | 2 U | 2 U | 2 U | 2 U | 2 U | 2 U | 2 U |
| 2-Hexanone | 10 | 5 U | 5 U | 5 U | 5 U | 5 U | 5 U | 5 U | 5 U |
| Tetrachloroethene | 5 | 2 U | 2 U | 2 U | 2 U | 2 U | 2 U | 9 | 9 |
| 1,1,2,2-Tetrachloroethane | 5 | 2 U | 2 U | 2 U | 2 U | 2 U | 2 U | 2 U | 2 U |
| Toluene | 5 | 2 U | 2 U | 2 U | 2 U | 2 U | 2 U | 2 U | 2 U |
| Chlorobenzene | 5 | 2 U | 2 U | 2 U | 2 U | 2 U | 2 U | 2 U | 2 U |
| Ethylbenzene | 5 | 2 U | 2 U | 2 U | 2 U | 2 U | 2 U | 2 U | 2 U |
| Styrene | 5 | 1 U | 1 U | 1 U | 1 U | 1 U | 1 U | 1 U | 1 U |
| Total Xylenes | 5 | 2 U | 2 U | 2 U | 2 U | 2 U | 2 U | 2 U | 2 U |
| Dilution Factor: | | 1.0 | 1.0 | 1.0 | 1.0 | 1.0 | 1.0 | 1.0 | 1.0 |
| Associated Method Blank: | | 79834 | 79834 | 79834 | 79834 | 79834 | 79834 | 79850 | 79850 |
| Associated Equipment Blank: | | BNQSXX1XXX02XX | BNQSXX1XXX02XX | BNQSXX1XXX02XX | BNQSXX1XXX02XX | BNQSXX1XXX02XX | BNQSXX1XXX02XX | BNQSXX2XXX02XX | BNQSXX2XXX02XX |
| Associated Field Blank: | | - | - | - | - | - | - | - | - |
| Associated Trip Blank: | | TRIPBLANK | TRIPBLANK | TRIPBLANK | TRIPBLANK | TRIPBLANK | TRIPBLANK | - | - |

Table 2
Validation / Summary Table

| SAMPLE LOCATION: | EPMW307XXX02XX | EPMW308XXX02XX | EPMW310XXX02XX | EPMW311XXX02XD | EPMW311XXX02XX | EPMW312XXX02XX | EPMW313XXX02XX | EPMW314AXX02XX |
|---|---|---|---|---|---|---|---|---|
| LAB NUMBER: | 901106705A | 901106706A | 901110408A | 901110410D | 901110409E | 901110411A | 901110412A | 901109004A |
| DATE SAMPLED: | 11/07/90 | 11/07/90 | 11/13/90 | 11/13/90 | 11/13/90 | 11/09/90 | 11/13/90 | 11/08/90 |
| DATE ANALYZED: | 11/08/90 | 11/08/90 | 11/14/90 | 11/14/90 | 11/14/90 | 11/14/90 | 11/14/90 | 11/09/90 |
| ANALYTE / CRQL | | | | | | | | |
| Chloromethane 10 | 2 U | 2 U | 2 U | 2 U | 2 U | 2 U | 2 U | 2 U |
| Bromomethane 10 | 2 U | 2 U | 2 U | 2 U | 2 U | 2 U | 2 U | 2 U |
| Vinyl Chloride 10 | 2 U | 2 U | 2 U | 2 U | 2 U | 2 U | 2 U | 2 U |
| Chloroethane 10 | 2 U | 2 U | 2 U | 2 U | 2 U | 2 U | 2 U | 2 U |
| Methylene Chloride 5 | 5 U | 5 U | 2 U | 14 U | 17 U | 2 U | 5 U | 7 J |
| Acetone 10 | 5 U | 5 U | 5 U | 5 U | 5 U | 5 U | 5 U | 5 U |
| Carbon Disulfide 5 | 3 U | 3 U | 3 U | 3 U | 3 U | 3 U | 3 U | 3 U |
| 1,1-Dichloroethene 5 | 2 U | 2 U | 2 U | 60 | 66 | 2 U | 2 U | 2 U |
| 1,1-Dichloroethane 5 | 2 U | 2 U | 2 U | 16 | 17 | 2 U | 2 U | 2 U |
| 1,2-Dichloroethene (total) 5 | 2 U | 2 U | 2 U | 3 JJ | 4 JJ | 2 U | 2 U | 2 U |
| Chloroform 5 | 2 U | 5 U | 2 U | 2 U | 2 U | 2 U | 2 U | 2 U |
| 1,2-Dichloroethane 5 | 2 U | 2 U | 2 U | 2 U | 2 U | 2 U | 2 U | 2 U |
| 2-Butanone 10 | 5 U | 5 U | 5 U | 5 U | 5 U | 5 U | 5 U | 5 U |
| 1,1,1-Trichloroethane 5 | 2 U | 2 U | 100 | 660 D | 660 D | 2 U | 2 U | 2 U |
| Carbon Tetrachloride 5 | 2 U | 2 U | 2 U | 2 U | 2 U | 2 U | 2 U | 2 U |
| Vinyl Acetate 10 | 5 U | 5 U | 5 U | 5 U | 5 U | 5 U | 5 U | 5 U |
| Bromodichloromethane 5 | 2 U | 2 U | 2 U | 2 U | 2 U | 2 U | 2 U | 2 U |
| 1,2-Dichloropropane 5 | 2 U | 2 U | 2 U | 2 U | 2 U | 2 U | 2 U | 2 U |
| cis-1,3-Dichloropropene 5 | 2 U | 2 U | 2 U | 2 U | 2 U | 2 U | 2 U | 2 U |
| Trichloroethene 5 | 2 U | 2 U | 30 | 25 | 27 | 2 U | 2 U | 2 U |
| Dibromochloromethane 5 | 2 U | 2 U | 2 U | 2 U | 2 U | 2 U | 2 U | 2 U |
| 1,1,2-Trichloroethane 5 | 2 U | 2 U | 2 U | 2 U | 2 U | 2 U | 2 U | 2 U |
| Benzene 5 | 2 U | 2 U | 2 U | 2 U | 2 U | 2 U | 2 U | 2 U |
| trans-1,3-Dichloropropene 5 | 1 U | 1 U | 1 U | 1 U | 1 U | 1 U | 1 U | 1 U |
| Bromoform 5 | 2 U | 2 U | 2 U | 2 U | 2 U | 2 U | 2 U | 2 U |
| 4-Methyl-2-Pentanone 10 | 2 U | 2 U | 2 U | 2 U | 2 U | 2 U | 2 U | 2 U |
| 2-Hexanone 10 | 5 U | 5 U | 5 U | 5 U | 5 U | 5 U | 5 U | 5 U |
| Tetrachloroethene 5 | 2 U | 2 U | 6 | 7 | 7 | 2 U | 2 U | 2 U |
| 1,1,2,2-Tetrachloroethane 5 | 2 U | 2 U | 2 U | 2 U | 2 U | 2 U | 2 U | 2 U |
| Toluene 5 | 2 U | 2 U | 2 U | 2 U | 2 U | 2 U | 2 U | 2 U |
| Chlorobenzene 5 | 2 U | 2 U | 2 U | 2 U | 2 U | 2 U | 2 U | 2 U |
| Ethylbenzene 5 | 2 U | 2 U | 2 U | 2 U | 2 U | 2 U | 2 U | 2 U |
| Styrene 5 | 1 U | 1 U | 1 U | 1 U | 1 U | 1 U | 1 U | 1 U |
| Total Xylenes 5 | 2 U | 2 U | 2 U | 2 U | 2 U | 2 U | 2 U | 2 U |
| Dilution Factor: | 1.0 | 1.0 | 1.0 | 1.0 | 1.0 | 1.0 | 1.0 | 1.0 |
| Associated Method Blank: | 79850 | 79850 | 79908 | 79908 | 79908 | 79908 | 79908 | 79865 |
| Associated Equipment Blank: | BNQSXX2XXX02XX | BNQSXX2XXX02XX | BNQSXX4XXX02XX | BNQSXX4XXX02XX | BNQSXX4XXX02XX | BNQSXX4XXX02XX | BNQSXX4XXX02XX | - |
| Associated Field Blank: | - | - | - | - | - | - | - | - |
| Associated Trip Blank: | - | - | - | - | - | - | - | - |

Table 2
Validation / Summary Table

| SAMPLE LOCATION: | EPMW314BXX02XX | EPMW315AXX02XX | EPMW315BXX02XX | EPMW318XXX02XX | EPMW319XXX02XX | O6MW320XXX02XX | O6MW321XXX02XX | O6MW322XXX02XX |
|---|---|---|---|---|---|---|---|---|
| LAB NUMBER: | 901109005A | 901109006A | 901109007A | 901109008A | 901110413A | 901105111A | 901105112A | 901105113A |
| DATE SAMPLED: | 11/08/90 | 11/08/90 | 11/08/90 | 11/08/90 | 11/09/90 | 11/06/90 | 11/06/90 | 11/06/90 |
| DATE ANALYZED: | 11/09/90 | 11/09/90 | 11/13/90 | 11/13/90 | 11/14/90 | 11/07/90 | 11/07/90 | 11/07/90 |
| ANALYTE / CRQL | | | | | | | | |
| Chloromethane 10 | 2 U | 2 U | 2 U | 2 U | 2 U | 2 U | 2 U | 2 U |
| Bromomethane 10 | 2 U | 2 U | 2 U | 2 U | 2 U | 2 U | 2 U | 2 U |
| Vinyl Chloride 10 | 2 U | 2 U | 2 U | 2 U | 2 U | 2 U | 2 U | 2 U |
| Chloroethane 10 | 2 U | 2 U | 2 U | 2 U | 2 U | 2 U | 2 U | 2 U |
| Methylene Chloride 5 | 7 J | 5 J | 2 U | 9 J | 7 U | 24 U | 6 U | 27 U |
| Acetone 10 | 5 U | 5 U | 5 U | 5 U | 5 U | 5 U | 5 U | 5 U |
| Carbon Disulfide 5 | 3 U | 3 U | 3 U | 3 U | 3 U | 3 U | 3 U | 3 U |
| 1,1-Dichloroethene 5 | 2 U | 2 U | 2 U | 2 U | 2 U | 2 U | 2 U | 2 U |
| 1,1-Dichloroethane 5 | 2 U | 2 U | 2 U | 2 U | 2 U | 2 U | 2 U | 2 U |
| 1,2-Dichloroethene (total) 5 | 2 U | 2 U | 2 U | 2 U | 2 U | 2 U | 2 U | 2 U |
| Chloroform 5 | 2 U | 2 U | 2 U | 2 U | 2 U | 7 U | 2 U | 2 U |
| 1,2-Dichloroethane 5 | 2 U | 2 U | 2 U | 2 U | 2 U | 2 U | 2 U | 2 U |
| 2-Butanone 10 | 5 U | 5 U | 5 U | 5 U | 5 U | 5 U | 5 U | 5 U |
| 1,1,1-Trichloroethane 5 | 2 U | 2 U | 2 U | 2 U | 11 | 2 U | 2 U | 2 U |
| Carbon Tetrachloride 5 | 2 U | 2 U | 2 U | 2 U | 2 U | 2 U | 2 U | 2 U |
| Vinyl Acetate 10 | 5 U | 5 U | 5 U | 5 U | 5 U | 5 U | 5 U | 5 U |
| Bromodichloromethane 5 | 2 U | 2 U | 2 U | 2 U | 2 U | 2 U | 2 U | 2 U |
| 1,2-Dichloropropane 5 | 2 U | 2 U | 2 U | 2 U | 2 U | 2 U | 2 U | 2 U |
| cis-1,3-Dichloropropene 5 | 2 U | 2 U | 2 U | 2 U | 2 U | 2 U | 2 U | 2 U |
| Trichloroethene 5 | 2 U | 2 U | 2 U | 2 U | 6 | 2 U | 2 U | 2 U |
| Dibromochloromethane 5 | 2 U | 2 U | 2 U | 2 U | 2 U | 2 U | 2 U | 2 U |
| 1,1,2-Trichloroethane 5 | 2 U | 2 U | 2 U | 2 U | 2 U | 2 U | 2 U | 2 U |
| Benzene 5 | 2 U | 2 U | 2 U | 2 U | 2 U | 2 U | 2 U | 2 U |
| trans-1,3-Dichloropropene 5 | 1 U | 1 U | 1 U | 1 U | 1 U | 1 U | 1 U | 1 U |
| Bromoform 5 | 2 U | 2 U | 2 U | 2 U | 2 U | 2 U | 2 U | 2 U |
| 4-Methyl-2-Pentanone 10 | 2 U | 2 U | 2 U | 2 U | 2 U | 2 U | 2 U | 2 U |
| 2-Hexanone 10 | 5 U | 5 U | 5 U | 5 U | 5 U | 5 U | 5 U | 5 U |
| Tetrachloroethene 5 | 2 U | 2 U | 2 U | 2 U | 3 JJ | 2 U | 2 U | 2 JJ |
| 1,1,2,2-Tetrachloroethane 5 | 2 U | 2 U | 2 U | 2 U | 2 U | 2 U | 2 U | 2 U |
| Toluene 5 | 2 U | 2 U | 2 U | 2 U | 2 U | 2 U | 2 U | 2 U |
| Chlorobenzene 5 | 2 U | 2 U | 2 U | 2 U | 2 U | 2 U | 2 U | 2 U |
| Ethylbenzene 5 | 2 U | 2 U | 2 U | 2 U | 2 U | 2 U | 2 U | 2 U |
| Styrene 5 | 1 U | 1 U | 1 U | 1 U | 1 U | 1 U | 1 U | 1 U |
| Total Xylenes 5 | 2 U | 2 U | 2 U | 2 U | 2 U | 2 U | 2 U | 2 U |
| Dilution Factor: | 1.0 | 1.0 | 1.0 | 1.0 | 1.0 | 1.0 | 1.0 | 1.0 |
| Associated Method Blank: | 79865 | 79865 | 79894 | 79894 | 79908 | 79834 | 79834 | 79834 |
| Associated Equipment Blank: | - | - | - | - | BNQSXX4XXX02XX | BNQSXX1XXX02XX | BNQSXX1XXX02XX | BNQSXX1XXX02XX |
| Associated Field Blank: | - | - | - | - | - | - | - | - |
| Associated Trip Blank: | - | - | - | - | - | TRIPBLANK | TRIPBLANK | TRIPBLANK |

M-17

Table 2
Validation / Summary Table

SAMPLE LOCATION: O6MW323XXXO2XX
LAB NUMBER: 901105114A
DATE SAMPLED: 11/06/90
DATE ANALYZED: 11/08/90

| ANALYTE | CRQL | | |
|---|---|---|---|
| Chloromethane | 10 | 10 | U |
| Bromomethane | 10 | 10 | U |
| Vinyl Chloride | 10 | 10 | U |
| Chloroethane | 10 | 10 | U |
| Methylene Chloride | 5 | 5 | U |
| Acetone | 10 | 10 | U |
| Carbon Disulfide | 5 | 5 | U |
| 1,1-Dichloroethene | 5 | 5 | U |
| 1,1-Dichloroethane | 5 | 5 | U |
| 1,2-Dichloroethene (total) | 5 | 5 | U |
| Chloroform | 5 | 5 | U |
| 1,2-Dichloroethane | 5 | 5 | U |
| 2-Butanone | 10 | 10 | U |
| 1,1,1-Trichloroethane | 5 | 5 | U |
| Carbon Tetrachloride | 5 | 5 | U |
| Vinyl Acetate | 10 | 10 | U |
| Bromodichloromethane | 5 | 5 | U |
| 1,2-Dichloropropane | 5 | 5 | U |
| cis-1,3-Dichloropropene | 5 | 5 | U |
| Trichloroethene | 5 | 5 | U |
| Dibromochloromethane | 5 | 5 | U |
| 1,1,2-Trichloroethane | 5 | 5 | U |
| Benzene | 5 | 5 | U |
| trans-1,3-Dichloropropene | 5 | 5 | U |
| Bromoform | 5 | 5 | U |
| 4-Methyl-2-Pentanone | 10 | 10 | U |
| 2-Hexanone | 10 | 10 | U |
| Tetrachloroethene | 5 | 5 | U |
| 1,1,2,2-Tetrachloroethane | 5 | 5 | U |
| Toluene | 5 | 5 | U |
| Chlorobenzene | 5 | 5 | U |
| Ethylbenzene | 5 | 5 | U |
| Styrene | 5 | 5 | U |
| Total Xylenes | 5 | 5 | U |
| Dilution Factor: | | 1.0 | |

Associated Method Blank: 79850
Associated Equipment Blank: BNQSXX1XXXO2XX
Associated Field Blank: -
Associated Trip Blank: TRIPBLANK

Table 2
Validation / Summary Table

| SAMPLE LOCATION: | EPMW309AXX02XX | EPMW309BXX02XX | EPMW316AXX02XX | EPMW316BXX02XX | EPMW317AXX02XX | EPMW317BXX03XD | EPMW317BXX03XX |
|---|---|---|---|---|---|---|---|
| LAB NUMBER: | 901108002A | 901108003A | 901108904A | 901108905A | 901108903A | 42104 | 42103 |
| DATE SAMPLED: | 11/07/90 | 11/07/90 | 11/08/90 | 11/08/90 | 11/07/90 | 01/16/91 | 01/16/91 |
| DATE ANALYZED: | 11/12/90 | 11/12/90 | 11/12/90 | 11/12/90 | 11/12/90 | 01/23/91 | 01/23/91 |
| ANALYTE | CRQL | | | | | | |
| Chloromethane | 10 | 1 U | 1 U | 1 U | 1 U | 1 U | 1 U | 1 U |
| Bromomethane | 10 | 1 U | 1 U | 1 U | 1 U | 1 U | 1 U | 1 U |
| Vinyl Chloride | 10 | 1 U | 1 U | 1 U | 1 U | 1 U | 1 U | 1 U |
| Chloroethane | 10 | 1 U | 1 U | 1 U | 1 U | 1 U | 1 U | 1 U |
| Methylene Chloride | 5 | 0.5 U | 0.7 | 0.2 U | 0.2 U | 0.2 U | 0.2 U | 0.2 U |
| Acetone | 10 | 1 UJ | 1 UJ | 1 UJ | 1 UJ | 1 UJ | 1 U | 3 J |
| Carbon Disulfide | 5 | 0.5 U | 0.5 U | 0.5 U | 0.5 U | 0.5 U | 0.5 U | 0.5 U |
| 1,1-Dichloroethene | 5 | 0.5 U | 0.5 U | 0.5 U | 0.5 U | 0.5 U | 0.5 U | 0.5 U |
| 1,1-Dichloroethane | 5 | 0.5 U | 0.5 U | 0.5 U | 0.5 U | 0.5 U | 0.5 U | 0.5 U |
| 1,2-Dichloroethene (total) | 5 | 0.5 U | 0.5 U | 0.5 U | 0.5 U | 0.5 U | 0.5 U | 0.5 U |
| Chloroform | 5 | 0.5 U | 0.5 U | 0.4 U | 0.2 U | 1 U | 5 | 5 |
| 1,2-Dichloroethane | 5 | 0.5 U | 0.5 U | 0.5 U | 0.5 U | 0.5 U | 0.5 U | 0.5 U |
| 2-Butanone | 10 | 1 U | 1 U | 1 U | 1 U | 1 U | 1 U | 1 U |
| 1,1,1-Trichloroethane | 5 | 0.5 U | 0.5 U | 0.5 U | 0.5 U | 0.5 U | 0.5 U | 0.5 U |
| Carbon Tetrachloride | 5 | 0.5 U | 0.5 U | 0.5 U | 0.5 U | 0.5 U | 0.5 U | 0.5 U |
| Vinyl Acetate | 10 | 1 U | 1 U | 1 U | 1 U | 1 U | 1 U | 1 U |
| Bromodichloromethane | 5 | 0.5 U | 0.5 U | 0.5 U | 0.5 U | 0.8 | 1 X | 1 X |
| 1,2-Dichloropropane | 5 | 0.5 U | 0.5 U | 0.5 U | 0.5 U | 0.5 U | 0.5 U | 0.5 U |
| cis-1,3-Dichloropropene | 5 | 0.5 U | 0.5 U | 0.5 U | 0.5 U | 0.5 U | 0.5 U | 0.5 U |
| Trichloroethene | 5 | 0.5 U | 0.5 U | 0.5 U | 0.5 U | 0.5 U | 0.5 U | 0.5 U |
| Dibromochloromethane | 5 | 0.5 U | 0.5 U | 0.5 U | 0.5 U | 0.5 U | 0.5 U | 0.5 U |
| 1,1,2-Trichloroethane | 5 | 0.5 U | 0.5 U | 0.5 U | 0.5 U | 0.5 U | 0.5 U | 0.5 U |
| Benzene | 5 | 0.5 U | 0.5 U | 0.5 U | 0.5 U | 0.5 U | 0.5 U | 0.5 U |
| trans-1,3-Dichloropropene | 5 | 0.5 U | 0.5 U | 0.5 U | 0.5 U | 0.5 U | 0.5 U | 0.5 U |
| Bromoform | 5 | 0.5 U | 0.5 U | 0.5 U | 0.5 U | 0.5 U | 0.5 U | 0.5 U |
| 4-Methyl-2-Pentanone | 10 | 1 U | 1 U | 1 U | 1 U | 1 U | 1 U | 1 U |
| 2-Hexanone | 10 | 1 U | 1 U | 1 U | 1 U | 1 U | 0.2 UJ | 0.2 UJ |
| Tetrachloroethene | 5 | 0.5 U | 0.5 U | 0.5 U | 0.5 U | 0.5 U | 0.5 U | 0.5 U |
| 1,1,2,2-Tetrachloroethane | 5 | 0.5 U | 0.5 U | 0.5 U | 0.5 U | 0.5 U | 0.5 U | 0.5 U |
| Toluene | 5 | 0.5 U | 0.5 U | 0.6 | 0.5 U | 0.5 U | 0.5 U | 0.5 U |
| Chlorobenzene | 5 | 0.5 U | 0.5 U | 0.5 U | 0.5 U | 0.5 U | 0.5 U | 0.5 U |
| Ethylbenzene | 5 | 0.5 U | 0.5 U | 0.5 U | 0.5 U | 0.5 U | 0.5 U | 0.5 U |
| Styrene | 5 | 0.5 U | 0.5 U | 0.5 U | 0.5 U | 0.5 U | 0.5 U | 0.5 U |
| Total Xylenes | 5 | 0.5 U | 0.5 U | 0.8 U | 0.5 U | 0.5 U | 0.5 U | 0.5 U |
| Dilution Factor: | | 1.0 | 1.0 | 1.0 | 1.0 | 1.0 | 1.0 | 1.0 |
| Associated Method Blank: | | 79882 | 79882 | 79882 | 79882 | 79882 | V7539 | V7539 |
| Associated Equipment Blank: | | - | - | BNQSXX3XXXO2XX | BNQSXX3XXXO2XX | BNQSXX3XXXO2XX | - | - |
| Associated Field Blank: | | - | - | - | - | - | - | - |
| Associated Trip Blank: | | BNQTXX2XXXO2XX | BNQTXX2XXXO2XX | BNQTXX3XXXO2XX | BNQTXX3XXXO2XX | BNQTXX3XXXO2XX | OBQTXX1XXXO2XX | OBQTXX1XXXO2XX |

Table 2
Validation / Summary Table

| SAMPLE LOCATION: | | EPMW301XXX02XD | EPMW301XXX02XX | EPMW302XXX02XX | EPMW303XXX02XX | EPMW304XXX02XX | EPMW305XXX02XX | EPMW306XXX02XD | EPMW306XXX02XX |
|---|---|---|---|---|---|---|---|---|---|
| LAB NUMBER: | | 901105602D | 901105601E | 901105605A | 901105606A | 901105607A | 901105608A | 901106902D | 901106901E |
| DATE SAMPLED: | | 11/05/90 | 11/05/90 | 11/06/90 | 11/06/90 | 11/06/90 | 11/06/90 | 11/07/90 | 11/07/90 |
| DATE EXTRACTED: | | 11/09/90 | 11/09/90 | 11/09/90 | 11/09/90 | 11/09/90 | 11/09/90 | 11/12/90 | 11/12/90 |
| DATE ANALYZED: | | 11/15/90 | 11/15/90 | 11/15/90 | 11/15/90 | 11/15/90 | 11/15/90 | 11/20/90 | 11/20/90 |
| ANALYTE | CRQL | | | | | | | | |
| Phenol | 10 | 10 U | 10 U | 10 U | 10 U | 10 U | 10 U | 10 U | 10 U |
| bis(2-Chloroethyl)ether | 10 | 10 U | 10 U | 10 U | 10 U | 10 U | 10 U | 10 U | 10 U |
| 2-Chlorophenol | 10 | 10 U | 10 U | 10 U | 10 U | 10 U | 10 U | 10 U | 10 U |
| 1,3-Dichlorobenzene | 10 | 10 U | 10 U | 10 U | 10 U | 10 U | 10 U | 10 U | 10 U |
| 1,4-Dichlorobenzene | 10 | 10 U | 10 U | 10 U | 10 U | 10 U | 10 U | 10 U | 10 U |
| Benzyl Alcohol | 10 | 10 U | 10 U | 10 U | 10 U | 10 U | 10 U | 10 U | 10 U |
| 1,2-Dichlorobenzene | 10 | 10 U | 10 U | 10 U | 10 U | 10 U | 10 U | 10 U | 10 U |
| 2-Methylphenol | 10 | 10 U | 10 U | 10 U | 10 U | 10 U | 10 U | 10 U | 10 U |
| bis(2-Chloroisopropyl)ether | 10 | 10 U | 10 U | 10 U | 10 U | 10 U | 10 U | 10 U | 10 U |
| 4-Methylphenol | 10 | 10 U | 10 U | 10 U | 10 U | 10 U | 10 U | 10 U | 10 U |
| N-Nitroso-di-n-propylamine | 10 | 10 U | 10 U | 10 U | 10 U | 10 U | 10 U | 10 U | 10 U |
| Hexachloroethane | 10 | 10 U | 10 U | 10 U | 10 U | 10 U | 10 U | 10 U | 10 U |
| Nitrobenzene | 10 | 10 U | 10 U | 10 U | 10 U | 10 U | 10 U | 10 U | 10 U |
| Isophorone | 10 | 10 U | 10 U | 10 U | 10 U | 10 U | 10 U | 10 U | 10 U |
| 2-Nitrophenol | 10 | 10 U | 10 U | 10 U | 10 U | 10 U | 10 U | 10 U | 10 U |
| 2,4-Dimethylphenol | 10 | 10 U | 10 U | 10 U | 10 U | 10 U | 10 U | 10 U | 10 U |
| Benzoic Acid | 50 | 50 UR | 50 UR | 50 UR | 50 UR | 50 UR | 50 UR | 50 UR | 50 UR |
| bis(2-Chloroethoxy)methane | 10 | 10 U | 10 U | 10 U | 10 U | 10 U | 10 U | 10 U | 10 U |
| 2,4-Dichlorophenol | 10 | 10 U | 10 U | 10 U | 10 U | 10 U | 10 U | 10 U | 10 U |
| 1,2,4-Trichlorobenzene | 10 | 10 U | 10 U | 10 U | 10 U | 10 U | 10 U | 10 U | 10 U |
| Naphthalene | 10 | 10 U | 10 U | 10 U | 10 U | 10 U | 10 U | 10 U | 10 U |
| 4-Chloroaniline | 10 | 10 U | 10 U | 10 U | 10 U | 10 U | 10 U | 10 U | 10 U |
| Hexachlorobutadiene | 10 | 10 U | 10 U | 10 U | 10 U | 10 U | 10 U | 10 U | 10 U |
| 4-Chloro-3-Methylphenol | 10 | 10 U | 10 U | 10 U | 10 U | 10 U | 10 U | 10 U | 10 U |
| 2-Methylnaphthalene | 10 | 10 U | 10 U | 10 U | 10 U | 10 U | 10 U | 10 U | 10 U |
| Hexachlorocyclopentadiene | 10 | 10 U | 10 U | 10 U | 10 U | 10 U | 10 U | 10 UJ | 10 UJ |
| 2,4,6-Trichlorophenol | 10 | 10 U | 10 U | 10 U | 10 U | 10 U | 10 U | 10 U | 10 U |
| 2,4,5-Trichlorophenol | 50 | 50 U | 50 U | 50 U | 50 U | 50 U | 50 U | 50 U | 50 U |
| 2-Chloronaphthalene | 10 | 10 U | 10 U | 10 U | 10 U | 10 U | 10 U | 10 U | 10 U |
| 2-Nitroaniline | 50 | 50 U | 50 U | 50 U | 50 U | 50 U | 50 U | 50 U | 50 U |
| Dimethylphthalate | 10 | 10 U | 10 U | 10 U | 10 U | 10 U | 10 U | 10 U | 10 U |
| Acenaphthylene | 10 | 10 U | 10 U | 10 U | 10 U | 10 U | 10 U | 10 U | 10 U |
| 2,6-Dinitrotoluene | 10 | 10 U | 10 U | 10 U | 10 U | 10 U | 10 U | 10 U | 10 U |

Table 2
Validation / Summary Table

| SAMPLE LOCATION: | | EPMW301XXX02XD | EPMW301XXX02XX | EPMW302XXX02XX | EPMW303XXX02XX | EPMW304XXX02XX | EPMW305XXX02XX | EPMW306XXX02XD | EPMW306XXX02XX |
|---|---|---|---|---|---|---|---|---|---|
| LAB NUMBER: | | 901105602D | 901105601E | 901105605A | 901105606A | 901105607A | 901105608A | 901106902D | 901106901E |
| DATE SAMPLED: | | 11/05/90 | 11/05/90 | 11/06/90 | 11/06/90 | 11/06/90 | 11/06/90 | 11/07/90 | 11/07/90 |
| DATE EXTRACTED: | | 11/09/90 | 11/09/90 | 11/09/90 | 11/09/90 | 11/09/90 | 11/09/90 | 11/12/90 | 11/12/90 |
| DATE ANALYZED: | | 11/15/90 | 11/15/90 | 11/15/90 | 11/15/90 | 11/15/90 | 11/15/90 | 11/20/90 | 11/20/90 |
| ANALYTE | CRQL | | | | | | | | |
| 3-Nitroaniline | 50 | 50 U | 50 U | 50 U | 50 U | 50 U | 50 U | 50 U | 50 U |
| Acenaphthene | 10 | 10 U | 10 U | 10 U | 10 U | 10 U | 10 U | 10 U | 10 U |
| 2,4-Dinitrophenol | 50 | 50 U | 50 U | 50 U | 50 U | 50 U | 50 U | 50 U | 50 U |
| 4-Nitrophenol | 50 | 50 UJ | 50 UJ | 50 U | 50 U | 50 U | 50 U | 50 UJ | 50 UJ |
| Dibenzofuran | 10 | 10 U | 10 U | 10 U | 10 U | 10 U | 10 U | 10 U | 10 U |
| 2,4-Dinitrotoluene | 10 | 10 U | 10 U | 10 U | 10 U | 10 U | 10 U | 10 U | 10 U |
| Diethylphthalate | 10 | 10 U | 10 U | 10 U | 10 U | 10 U | 10 U | 10 U | 10 U |
| 4-Chlorophenyl-phenylether | 10 | 10 U | 10 U | 10 U | 10 U | 10 U | 10 U | 10 U | 10 U |
| Fluorene | 10 | 10 U | 10 U | 10 U | 10 U | 10 U | 10 U | 10 U | 10 U |
| 4-Nitroaniline | 50 | 50 U | 50 U | 50 U | 50 U | 50 U | 50 U | 50 U | 50 U |
| 4,6-Dinitro-2-methylphenol | 50 | 50 U | 50 U | 50 U | 50 U | 50 U | 50 U | 50 U | 50 U |
| N-Nitrosodiphenylamine | 10 | 10 U | 10 U | 10 U | 10 U | 10 U | 10 U | 10 U | 10 U |
| 4-Bromophenyl-phenylether | 10 | 10 U | 10 U | 10 U | 10 U | 10 U | 10 U | 10 U | 10 U |
| Hexachlorobenzene | 10 | 10 U | 10 U | 10 U | 10 U | 10 U | 10 U | 10 U | 10 U |
| Pentachlorophenol | 50 | 50 U | 50 U | 50 U | 50 U | 50 U | 50 U | 50 U | 50 U |
| Phenanthrene | 10 | 10 U | 10 U | 10 U | 10 U | 10 U | 10 U | 10 U | 10 U |
| Anthracene | 10 | 10 U | 10 U | 10 U | 10 U | 10 U | 10 U | 10 U | 10 U |
| Di-n-butylphthalate | 10 | 10 U | 10 U | 10 U | 10 U | 10 U | 10 U | 10 U | 10 U |
| Fluoranthene | 10 | 10 U | 10 U | 10 U | 10 U | 10 U | 10 U | 10 U | 10 U |
| Pyrene | 10 | 10 U | 10 U | 10 U | 10 U | 10 U | 10 U | 10 U | 10 U |
| Butylbenzylphthalate | 10 | 10 U | 10 U | 10 U | 10 U | 10 U | 10 U | 10 U | 10 U |
| 3,3'-Dichlorobenzidine | 20 | 20 U | 20 U | 20 U | 20 U | 20 U | 20 U | 20 U | 20 U |
| Benzo(a)Anthracene | 10 | 10 U | 10 U | 10 U | 10 U | 10 U | 10 U | 10 U | 10 U |
| Chrysene | 10 | 10 U | 10 U | 10 U | 10 U | 10 U | 10 U | 10 U | 10 U |
| bis(2-Ethylhexyl)phthalate | 10 | 10 U | 10 U | 11 | 10 U | 18 | 10 U | 10 U | 10 U |
| Di-n-octylphthalate | 10 | 10 U | 10 U | 10 U | 10 U | 10 U | 10 U | 2 JJ | 1 JJ |
| Benzo(b)Fluoranthene | 10 | 10 U | 10 U | 10 U | 10 U | 10 U | 10 U | 10 U | 10 U |
| Benzo(k)Fluoranthene | 10 | 10 U | 10 U | 10 U | 10 U | 10 U | 10 U | 10 U | 10 U |
| Benzo(a)Pyrene | 10 | 10 U | 10 U | 10 U | 10 U | 10 U | 10 U | 10 U | 10 U |
| Indeno(1,2,3-c,d)Pyrene | 10 | 10 U | 10 U | 10 U | 10 U | 10 U | 10 U | 10 U | 10 U |
| Dibenz(a,h)Anthracene | 10 | 10 U | 10 U | 10 U | 10 U | 10 U | 10 U | 10 U | 10 U |
| Benzo(g,h,i)perylene | 10 | 10 U | 10 U | 10 U | 10 U | 10 U | 10 U | 10 U | 10 U |
| Dilution Factor: | | .98 | .97 | .96 | 1.0 | 1.0 | .96 | .96 | .98 |
| Associated Method Blank: | | 94512 | 94512 | 94512 | 94512 | 94512 | 94512 | 94526 | 94526 |
| Associated Equipment Blank: | | BNQSXX1XXX02XX | BNQSXX1XXX02XX | BNQSXX1XXX02XX | BNQSXX1XXX02XX | BNQSXX1XXX02XX | BNQSXX1XXX02XX | BNQSXX2XXX02XX | BNQSXX2XXX02XX |
| Associated Field Blank: | | - | - | - | - | - | - | - | - |

Table 2
Validation / Summary Table

| SAMPLE LOCATION: | | EPMW307XXX02XX | EPMW308XXX02XX | EPMW309AXX02XX | EPMW309BXX02XX | EPMW310XXX02XX | EPMW311XXX02XD | EPMW311XXX02XX | EPMW312XXX02XX |
|---|---|---|---|---|---|---|---|---|---|
| LAB NUMBER: | | 901106905A | 901106906A | 901106907A | 901106908A | 901113201A | 901113203D | 901113202E | 901110602A |
| DATE SAMPLED: | | 11/07/90 | 11/07/90 | 11/07/90 | 11/07/90 | 11/13/90 | 11/13/90 | 11/13/90 | 11/09/90 |
| DATE EXTRACTED: | | 11/12/90 | 11/12/90 | 11/12/90 | 11/12/90 | 11/16/90 | 11/16/90 | 11/16/90 | 11/16/90 |
| DATE ANALYZED: | | 11/20/90 | 11/20/90 | 11/20/90 | 11/20/90 | 11/28/90 | 11/28/90 | 11/28/90 | 11/28/90 |
| ANALYTE | CRQL | | | | | | | | |
| Phenol | 10 | 10 U | 10 U | 10 U | 10 U | 10 U | 10 U | 10 U | 10 U |
| bis(2-Chloroethyl)ether | 10 | 10 U | 10 U | 10 U | 10 U | 10 U | 10 U | 10 U | 10 U |
| 2-Chlorophenol | 10 | 10 U | 10 U | 10 U | 10 U | 10 U | 10 U | 10 U | 10 U |
| 1,3-Dichlorobenzene | 10 | 10 U | 10 U | 10 U | 10 U | 10 U | 10 U | 10 U | 10 U |
| 1,4-Dichlorobenzene | 10 | 10 U | 10 U | 10 U | 10 U | 10 U | 10 U | 10 U | 10 U |
| Benzyl Alcohol | 10 | 10 U | 10 U | 10 U | 10 U | 10 U | 10 U | 10 U | 10 U |
| 1,2-Dichlorobenzene | 10 | 10 U | 10 U | 10 U | 10 U | 10 U | 10 U | 10 U | 10 U |
| 2-Methylphenol | 10 | 10 U | 10 U | 10 U | 10 U | 10 U | 10 U | 10 U | 10 U |
| bis(2-Chloroisopropyl)ether | 10 | 10 U | 10 U | 10 U | 10 U | 10 U | 10 U | 10 U | 10 U |
| 4-Methylphenol | 10 | 10 U | 10 U | 10 U | 10 U | 10 U | 10 U | 10 U | 10 U |
| N-Nitroso-di-n-propylamine | 10 | 10 U | 10 U | 10 U | 10 U | 10 U | 10 U | 10 U | 10 U |
| Hexachloroethane | 10 | 10 U | 10 U | 10 U | 10 U | 10 U | 10 U | 10 U | 10 U |
| Nitrobenzene | 10 | 10 U | 10 U | 10 U | 10 U | 10 U | 10 U | 10 U | 10 U |
| Isophorone | 10 | 10 U | 10 U | 10 U | 10 U | 10 U | 10 U | 10 U | 10 U |
| 2-Nitrophenol | 10 | 10 U | 10 U | 10 U | 10 U | 10 U | 10 U | 10 U | 10 U |
| 2,4-Dimethylphenol | 10 | 10 U | 10 U | 10 U | 10 U | 10 U | 10 U | 10 U | 10 U |
| Benzoic Acid | 50 | 50 UR | 50 UR | 50 UR | 50 UR | 50 U | 50 U | 50 U | 50 U |
| bis(2-Chloroethoxy)methane | 10 | 10 U | 10 U | 10 U | 10 U | 10 U | 10 U | 10 U | 10 U |
| 2,4-Dichlorophenol | 10 | 10 U | 10 U | 10 U | 10 U | 10 U | 10 U | 10 U | 10 U |
| 1,2,4-Trichlorobenzene | 10 | 10 U | 10 U | 10 U | 10 U | 10 U | 10 U | 10 U | 10 U |
| Naphthalene | 10 | 10 U | 1 JJ | 10 U | 10 U | 10 U | 10 U | 10 U | 10 U |
| 4-Chloroaniline | 10 | 10 U | 10 U | 10 U | 10 U | 10 U | 10 U | 10 U | 10 U |
| Hexachlorobutadiene | 10 | 10 U | 10 U | 10 U | 10 U | 10 U | 10 U | 10 U | 10 U |
| 4-Chloro-3-Methylphenol | 10 | 10 U | 10 U | 10 U | 10 U | 10 U | 10 U | 10 U | 10 U |
| 2-Methylnaphthalene | 10 | 10 U | 10 U | 10 U | 10 U | 10 U | 10 U | 10 U | 10 U |
| Hexachlorocyclopentadiene | 10 | 10 UJ | 10 UJ | 10 UJ | 10 UJ | 10 U | 10 U | 10 U | 10 U |
| 2,4,6-Trichlorophenol | 10 | 10 U | 10 U | 10 U | 10 U | 10 U | 10 U | 10 U | 10 U |
| 2,4,5-Trichlorophenol | 50 | 50 U | 50 U | 50 U | 50 U | 50 U | 50 U | 50 U | 50 U |
| 2-Chloronaphthalene | 10 | 10 U | 10 U | 10 U | 10 U | 10 U | 10 U | 10 U | 10 U |
| 2-Nitroaniline | 50 | 50 U | 50 U | 50 U | 50 U | 50 U | 50 U | 50 U | 50 U |
| Dimethylphthalate | 10 | 10 U | 10 U | 10 U | 10 U | 10 U | 10 U | 10 U | 10 U |
| Acenaphthylene | 10 | 10 U | 10 U | 10 U | 10 U | 10 U | 10 U | 10 U | 10 U |
| 2,6-Dinitrotoluene | 10 | 10 U | 10 U | 10 U | 10 U | 10 U | 10 U | 10 U | 10 U |

Table 2
Validation / Summary Table

| SAMPLE LOCATION: | EPMW307XXX02XX | EPMW308XXX02XX | EPMW309AXX02XX | EPMW309BXX02XX | EPMW310XXX02XX | EPMW311XXX02XD | EPMW311XXX02XX | EPMW312XXX02XX |
|---|---|---|---|---|---|---|---|---|
| LAB NUMBER: | 901106905A | 901106906A | 901106907A | 901106908A | 901113201A | 901113203D | 901113202E | 901110602A |
| DATE SAMPLED: | 11/07/90 | 11/07/90 | 11/07/90 | 11/07/90 | 11/13/90 | 11/13/90 | 11/13/90 | 11/09/90 |
| DATE EXTRACTED: | 11/12/90 | 11/12/90 | 11/12/90 | 11/12/90 | 11/16/90 | 11/16/90 | 11/16/90 | 11/16/90 |
| DATE ANALYZED: | 11/20/90 | 11/20/90 | 11/20/90 | 11/20/90 | 11/28/90 | 11/28/90 | 11/28/90 | 11/28/90 |
| ANALYTE | CRQL | | | | | | | |
| 3-Nitroaniline | 50 | 50 U | 50 U | 50 U | 50 U | 50 U | 50 U | 50 U |
| Acenaphthene | 10 | 10 U | 10 U | 10 U | 10 U | 10 U | 10 U | 10 U |
| 2,4-Dinitrophenol | 50 | 50 U | 50 U | 50 U | 50 U | 50 U | 50 U | 50 U |
| 4-Nitrophenol | 50 | 50 UJ | 50 UJ | 50 UJ | 50 UJ | 50 UJ | 50 UJ | 50 UJ |
| Dibenzofuran | 10 | 10 U | 10 U | 10 U | 10 U | 10 U | 10 U | 10 U |
| 2,4-Dinitrotoluene | 10 | 10 U | 10 U | 10 U | 10 U | 10 U | 10 U | 10 U |
| Diethylphthalate | 10 | 10 U | 10 U | 10 U | 10 U | 10 U | 10 U | 10 U |
| 4-Chlorophenyl-phenylether | 10 | 10 U | 10 U | 10 U | 10 U | 10 U | 10 U | 10 U |
| Fluorene | 10 | 10 U | 10 U | 10 U | 10 U | 10 U | 10 U | 10 U |
| 4-Nitroaniline | 50 | 50 U | 50 U | 50 U | 50 UJ | 50 U | 50 U | 50 U |
| 4,6-Dinitro-2-methylphenol | 50 | 50 U | 50 U | 50 U | 50 U | 50 U | 50 U | 50 U |
| N-Nitrosodiphenylamine | 10 | 10 U | 10 U | 10 U | 10 U | 10 U | 10 U | 10 U |
| 4-Bromophenyl-phenylether | 10 | 10 U | 10 U | 10 U | 10 U | 10 U | 10 U | 10 U |
| Hexachlorobenzene | 10 | 10 U | 10 U | 10 U | 10 U | 10 U | 10 U | 10 U |
| Pentachlorophenol | 50 | 50 U | 50 U | 50 U | 50 U | 50 U | 50 U | 50 U |
| Phenanthrene | 10 | 10 U | 10 U | 10 U | 10 U | 10 U | 10 U | 10 U |
| Anthracene | 10 | 10 U | 10 U | 10 U | 10 U | 10 U | 10 U | 10 U |
| Di-n-butylphthalate | 10 | 10 U | 10 U | 10 U | 10 U | 10 U | 10 U | 10 U |
| Fluoranthene | 10 | 10 U | 10 U | 10 U | 10 U | 10 U | 10 U | 10 U |
| Pyrene | 10 | 10 U | 10 U | 10 U | 10 U | 10 U | 10 U | 10 U |
| Butylbenzylphthalate | 10 | 10 U | 10 U | 10 U | 10 U | 10 U | 10 U | 10 U |
| 3,3'-Dichlorobenzidine | 20 | 20 U | 20 U | 20 U | 20 U | 20 U | 20 U | 20 U |
| Benzo(a)Anthracene | 10 | 10 U | 10 U | 10 U | 10 U | 10 U | 10 U | 10 U |
| Chrysene | 10 | 10 U | 10 U | 10 U | 10 U | 10 U | 10 U | 10 U |
| bis(2-Ethylhexyl)phthalate | 10 | 10 U | 10 U | 12 U | 10 U | 10 U | 12 B | 10 U |
| Di-n-octylphthalate | 10 | 10 U | 10 U | 10 U | 10 U | 10 U | 10 U | 10 U |
| Benzo(b)Fluoranthene | 10 | 10 U | 10 U | 10 U | 10 U | 10 U | 10 U | 10 U |
| Benzo(k)Fluoranthene | 10 | 10 U | 10 U | 10 U | 10 U | 10 U | 10 U | 10 U |
| Benzo(a)Pyrene | 10 | 10 U | 10 U | 10 U | 10 U | 10 U | 10 U | 10 U |
| Indeno(1,2,3-c,d)Pyrene | 10 | 10 U | 10 U | 10 U | 10 U | 10 U | 10 U | 10 U |
| Dibenz(a,h)Anthracene | 10 | 10 U | 10 U | 10 U | 10 U | 10 U | 10 U | 10 U |
| Benzo(g,h,i)perylene | 10 | 10 U | 10 U | 10 U | 10 U | 10 U | 10 U | 10 U |
| Dilution Factor: | | .97 | .97 | 1.0 | .94 | 1.0 | .86 | .95 | 1.0 |
| Associated Method Blank: | | 94526 | 94526 | 94526 | 94526 | 94591 | 94591 | 94591 | 94591 |
| Associated Equipment Blank: | | BNQSXX2XXX02XX | BNQSXX2XXX02XX | BNQSXX2XXX02XX | BNQSXX2XXX02XX | BNQSXX4XXX02XX | BNQSXX4XXX02XX | BNQSXX4XXX02XX | - |
| Associated Field Blank: | | - | - | - | - | - | - | - | - |

Table 2
Validation / Summary Table

| SAMPLE LOCATION: | | EPMW313XXX02XX | EPMW314AXX02XX | EPMW314BXX02XX | EPMW315AXX02XX | EPMW315BXX02XX | EPMW316AXX02XX | EPMW316BXX02XX | EPMW317AXX02XX |
|---|---|---|---|---|---|---|---|---|---|
| LAB NUMBER: | | 901113204A | 901109202A | 901109203A | 901109204A | 901109205A | 901109206A | 901109207A | 901109208A |
| DATE SAMPLED: | | 11/13/90 | 11/08/90 | 11/08/90 | 11/08/90 | 11/08/90 | 11/08/90 | 11/08/90 | 11/07/90 |
| DATE EXTRACTED: | | 11/16/90 | 11/12/90 | 11/12/90 | 11/12/90 | 11/12/90 | 11/12/90 | 11/12/90 | 11/12/90 |
| DATE ANALYZED: | | 11/28/90 | 11/20/90 | 11/20/90 | 11/20/90 | 11/20/90 | 11/20/90 | 11/21/90 | 11/21/90 |
| ANALYTE | CRQL | | | | | | | | |
| Phenol | 10 | 10 U | 10 U | 10 U | 10 U | 10 U | 10 U | 10 U | 10 U |
| bis(2-Chloroethyl)ether | 10 | 10 U | 10 U | 10 U | 10 U | 10 U | 10 U | 10 U | 10 U |
| 2-Chlorophenol | 10 | 10 U | 10 U | 10 U | 10 U | 10 U | 10 U | 10 U | 10 U |
| 1,3-Dichlorobenzene | 10 | 10 U | 10 U | 10 U | 10 U | 10 U | 10 U | 10 U | 10 U |
| 1,4-Dichlorobenzene | 10 | 10 U | 10 U | 10 U | 10 U | 10 U | 10 U | 10 U | 10 U |
| Benzyl Alcohol | 10 | 10 U | 10 U | 10 U | 10 U | 10 U | 10 U | 10 U | 10 U |
| 1,2-Dichlorobenzene | 10 | 10 U | 10 U | 10 U | 10 U | 10 U | 10 U | 10 U | 10 U |
| 2-Methylphenol | 10 | 10 U | 10 U | 10 U | 10 U | 10 U | 10 U | 10 U | 10 U |
| bis(2-Chloroisopropyl)ether | 10 | 10 U | 10 U | 10 U | 10 U | 10 U | 10 U | 10 U | 10 U |
| 4-Methylphenol | 10 | 10 U | 10 U | 10 U | 10 U | 10 U | 10 U | 10 U | 10 U |
| N-Nitroso-di-n-propylamine | 10 | 10 U | 10 U | 10 U | 10 U | 10 U | 10 U | 10 U | 10 U |
| Hexachloroethane | 10 | 10 U | 10 U | 10 U | 10 U | 10 U | 10 U | 10 U | 10 U |
| Nitrobenzene | 10 | 10 U | 10 U | 10 U | 10 U | 10 U | 10 U | 10 U | 10 U |
| Isophorone | 10 | 10 U | 10 U | 10 U | 10 U | 10 U | 10 U | 10 U | 10 U |
| 2-Nitrophenol | 10 | 10 U | 10 U | 10 U | 10 U | 10 U | 10 U | 10 U | 10 U |
| 2,4-Dimethylphenol | 10 | 10 U | 10 U | 10 U | 10 U | 10 U | 10 U | 10 U | 10 U |
| Benzoic Acid | 50 | 50 U | 50 UR | 50 UR | 50 UR | 50 UR | 50 UR | 50 UJ | 50 UJ |
| bis(2-Chloroethoxy)methane | 10 | 10 U | 10 U | 10 U | 10 U | 10 U | 10 U | 10 U | 10 U |
| 2,4-Dichlorophenol | 10 | 10 U | 10 U | 10 U | 10 U | 10 U | 10 U | 10 U | 10 U |
| 1,2,4-Trichlorobenzene | 10 | 10 U | 10 U | 10 U | 10 U | 10 U | 10 U | 10 U | 10 U |
| Naphthalene | 10 | 10 U | 10 U | 10 U | 10 U | 10 U | 10 U | 10 U | 10 U |
| 4-Chloroaniline | 10 | 10 U | 10 U | 10 U | 10 U | 10 U | 10 U | 10 U | 10 U |
| Hexachlorobutadiene | 10 | 10 U | 10 U | 10 U | 10 U | 10 U | 10 U | 10 U | 10 U |
| 4-Chloro-3-Methylphenol | 10 | 10 U | 10 U | 10 U | 10 U | 10 U | 10 U | 10 U | 10 U |
| 2-Methylnaphthalene | 10 | 10 U | 10 U | 10 U | 10 U | 10 U | 10 U | 10 U | 10 U |
| Hexachlorocyclopentadiene | 10 | 10 U | 10 U | 10 U | 10 U | 10 U | 10 U | 10 UJ | 10 UJ |
| 2,4,6-Trichlorophenol | 10 | 10 U | 10 U | 10 U | 10 U | 10 U | 10 U | 10 U | 10 U |
| 2,4,5-Trichlorophenol | 50 | 50 U | 50 U | 50 U | 50 U | 50 U | 50 U | 50 U | 50 U |
| 2-Chloronaphthalene | 10 | 10 U | 10 U | 10 U | 10 U | 10 U | 10 U | 10 U | 10 U |
| 2-Nitroaniline | 50 | 50 U | 50 U | 50 U | 50 U | 50 U | 50 U | 50 U | 50 U |
| Dimethylphthalate | 10 | 10 U | 10 U | 10 U | 10 U | 10 U | 10 U | 10 U | 10 U |
| Acenaphthylene | 10 | 10 U | 10 U | 10 U | 10 U | 10 U | 10 U | 10 U | 10 U |
| 2,6-Dinitrotoluene | 10 | 10 U | 10 U | 10 U | 10 U | 10 U | 10 U | 10 U | 10 U |

Table 2
Validation / Summary Table

| SAMPLE LOCATION: | | EPMW313XXX02XX | EPMW314AXX02XX | EPMW314BXX02XX | EPMW315AXX02XX | EPMW315BXX02XX | EPMW316AXX02XX | EPMW316BXX02XX | EPMW317AXX02XX |
|---|---|---|---|---|---|---|---|---|---|
| LAB NUMBER: | | 901113204A | 901109202A | 901109203A | 901109204A | 901109205A | 901109206A | 901109207A | 901109208A |
| DATE SAMPLED: | | 11/13/90 | 11/08/90 | 11/08/90 | 11/08/90 | 11/08/90 | 11/08/90 | 11/08/90 | 11/07/90 |
| DATE EXTRACTED: | | 11/16/90 | 11/12/90 | 11/12/90 | 11/12/90 | 11/12/90 | 11/12/90 | 11/12/90 | 11/12/90 |
| DATE ANALYZED: | | 11/28/90 | 11/20/90 | 11/20/90 | 11/20/90 | 11/20/90 | 11/20/90 | 11/21/90 | 11/21/90 |
| ANALYTE | CRQL | | | | | | | | |
| 3-Nitroaniline | 50 | 50 U | 50 U | 50 U | 50 U | 50 U | 50 U | 50 U | 50 U |
| Acenaphthene | 10 | 10 U | 10 U | 10 U | 10 U | 10 U | 10 U | 10 U | 10 U |
| 2,4-Dinitrophenol | 50 | 50 U | 50 U | 50 U | 50 U | 50 U | 50 U | 50 U | 50 U |
| 4-Nitrophenol | 50 | 50 UJ | 50 U | 50 U | 50 U | 50 U | 50 U | 50 UJ | 50 UJ |
| Dibenzofuran | 10 | 10 U | 10 U | 10 U | 10 U | 10 U | 10 U | 10 U | 10 U |
| 2,4-Dinitrotoluene | 10 | 10 U | 10 U | 10 U | 10 U | 10 U | 10 U | 10 U | 10 U |
| Diethylphthalate | 10 | 10 U | 10 U | 10 U | 10 U | 10 U | 10 U | 10 U | 10 U |
| 4-Chlorophenyl-phenylether | 10 | 10 U | 10 U | 10 U | 10 U | 10 U | 10 U | 10 U | 10 U |
| Fluorene | 10 | 10 U | 10 U | 10 U | 10 U | 10 U | 10 U | 10 U | 10 U |
| 4-Nitroaniline | 50 | 50 U | 50 U | 50 U | 50 U | 50 U | 50 U | 50 UJ | 50 UJ |
| 4,6-Dinitro-2-methylphenol | 50 | 50 U | 50 U | 50 U | 50 U | 50 U | 50 U | 50 U | 50 U |
| N-Nitrosodiphenylamine | 10 | 10 U | 10 U | 10 U | 10 U | 10 U | 10 U | 10 U | 10 U |
| 4-Bromophenyl-phenylether | 10 | 10 U | 10 U | 10 U | 10 U | 10 U | 10 U | 10 U | 10 U |
| Hexachlorobenzene | 10 | 10 U | 10 U | 10 U | 10 U | 10 U | 10 U | 10 U | 10 U |
| Pentachlorophenol | 50 | 50 U | 50 U | 50 U | 50 U | 50 U | 50 U | 50 U | 50 U |
| Phenanthrene | 10 | 10 U | 10 U | 10 U | 10 U | 10 U | 10 U | 10 U | 10 U |
| Anthracene | 10 | 10 U | 10 U | 10 U | 10 U | 10 U | 10 U | 10 U | 10 U |
| Di-n-butylphthalate | 10 | 10 U | 10 U | 10 U | 10 U | 10 U | 10 U | 10 U | 10 U |
| Fluoranthene | 10 | 10 U | 10 U | 10 U | 10 U | 10 U | 10 U | 10 U | 10 U |
| Pyrene | 10 | 10 U | 10 U | 10 U | 10 U | 10 U | 10 U | 10 U | 10 U |
| Butylbenzylphthalate | 10 | 10 U | 10 U | 10 U | 10 U | 10 U | 10 U | 10 U | 10 U |
| 3,3'-Dichlorobenzidine | 20 | 20 U | 20 U | 20 U | 20 U | 20 U | 20 U | 20 U | 20 U |
| Benzo(a)Anthracene | 10 | 10 U | 10 U | 10 U | 10 U | 10 U | 10 U | 10 U | 10 U |
| Chrysene | 10 | 10 U | 10 U | 10 U | 10 U | 10 U | 10 U | 10 U | 10 U |
| bis(2-Ethylhexyl)phthalate | 10 | 10 U | 92 | 10 U | 10 U | 10 U | 10 U | 10 U | 10 U |
| Di-n-octylphthalate | 10 | 10 U | 2 JJ | 10 U | 10 U | 10 U | 10 U | 10 U | 10 U |
| Benzo(b)Fluoranthene | 10 | 10 U | 10 U | 10 U | 10 U | 10 U | 10 U | 10 U | 10 U |
| Benzo(k)Fluoranthene | 10 | 10 U | 10 U | 10 U | 10 U | 10 U | 10 U | 10 U | 10 U |
| Benzo(a)Pyrene | 10 | 10 U | 10 U | 10 U | 10 U | 10 U | 10 U | 10 U | 10 U |
| Indeno(1,2,3-c,d)Pyrene | 10 | 10 U | 10 U | 10 U | 10 U | 10 U | 10 U | 10 U | 10 U |
| Dibenz(a,h)Anthracene | 10 | 10 U | 10 U | 10 U | 10 U | 10 U | 10 U | 10 U | 10 U |
| Benzo(g,h,i)perylene | 10 | 10 U | 10 U | 10 U | 10 U | 10 U | 10 U | 10 U | 10 U |
| Dilution Factor: | | .87 | 1.0 | 1.0 | 1.0 | 1.0 | .96 | 1.0 | 1.0 |
| Associated Method Blank: | | 94591 | 94526 | 94526 | 94526 | 94526 | 94526 | 94526 | 94526 |
| Associated Equipment Blank: | | BNQSXX4XXX02XX | BNQSXX3XXX02XX | BNQSXX3XXX02XX | BNQSXX3XXX02XX | BNQSXX3XXX02XX | BNQSXX3XXX02XX | BNQSXX3XXX02XX | BNQSXX3XXX02XX |
| Associated Field Blank: | | - | - | - | - | - | - | - | - |

Table 2
Validation / Summary Table

| SAMPLE LOCATION: | | EPMW317BXX02XX | EPMW318XXX02XX | EPMW319XXX02XX | O6MW320XXX02XX | O6MW321XXX02XX | O6MW322XXX02XX | O6MW323XXX02XX |
|---|---|---|---|---|---|---|---|---|
| LAB NUMBER: | | 901109209B | 901109210A | 901110603A | 901105609A | 901105610A | 901105611A | 901105612A |
| DATE SAMPLED: | | 11/07/90 | 11/08/90 | 11/09/90 | 11/06/90 | 11/06/90 | 11/06/90 | 11/06/90 |
| DATE EXTRACTED: | | 11/12/90 | 11/12/90 | 11/16/90 | 11/09/90 | 11/09/90 | 11/09/90 | 11/09/90 |
| DATE ANALYZED: | | 11/21/90 | 11/21/90 | 11/28/90 | 11/15/90 | 11/15/90 | 11/15/90 | 11/15/90 |
| ANALYTE | CRQL | | | | | | | |
| Phenol | 10 | 10 U | 10 U | 10 U | 10 U | 10 U | 10 U | 10 U |
| bis(2-Chloroethyl)ether | 10 | 10 U | 10 U | 10 U | 10 U | 10 U | 10 U | 10 U |
| 2-Chlorophenol | 10 | 10 U | 10 U | 10 U | 10 U | 10 U | 10 U | 10 U |
| 1,3-Dichlorobenzene | 10 | 10 U | 10 U | 10 U | 10 U | 10 U | 10 U | 10 U |
| 1,4-Dichlorobenzene | 10 | 10 U | 10 U | 10 U | 10 U | 10 U | 10 U | 10 U |
| Benzyl Alcohol | 10 | 10 U | 10 U | 10 U | 10 U | 10 U | 10 U | 10 U |
| 1,2-Dichlorobenzene | 10 | 10 U | 10 U | 10 U | 10 U | 10 U | 10 U | 10 U |
| 2-Methylphenol | 10 | 10 U | 10 U | 10 U | 10 U | 10 U | 10 U | 10 U |
| bis(2-Chloroisopropyl)ether | 10 | 10 U | 10 U | 10 U | 10 U | 10 U | 10 U | 10 U |
| 4-Methylphenol | 10 | 10 U | 10 U | 10 U | 10 U | 10 U | 10 U | 10 U |
| N-Nitroso-di-n-propylamine | 10 | 10 U | 10 U | 10 U | 10 U | 10 U | 10 U | 10 U |
| Hexachloroethane | 10 | 10 U | 10 U | 10 U | 10 U | 10 U | 10 U | 10 U |
| Nitrobenzene | 10 | 10 U | 10 U | 10 U | 10 U | 10 U | 10 U | 10 U |
| Isophorone | 10 | 10 U | 10 U | 10 U | 10 U | 10 U | 10 U | 10 U |
| 2-Nitrophenol | 10 | 10 U | 10 U | 10 U | 10 U | 10 U | 10 U | 10 U |
| 2,4-Dimethylphenol | 10 | 10 U | 10 U | 10 U | 10 U | 10 U | 10 U | 10 U |
| Benzoic Acid | 50 | 50 UJ | 50 UJ | 50 U | 50 UR | 50 UR | 50 UR | 50 UR |
| bis(2-Chloroethoxy)methane | 10 | 10 U | 10 U | 10 U | 10 U | 10 U | 10 U | 10 U |
| 2,4-Dichlorophenol | 10 | 10 U | 10 U | 10 U | 10 U | 10 U | 10 U | 10 U |
| 1,2,4-Trichlorobenzene | 10 | 10 U | 10 U | 10 U | 10 U | 10 U | 10 U | 10 U |
| Naphthalene | 10 | 10 U | 10 U | 10 U | 10 U | 10 U | 10 U | 10 U |
| 4-Chloroaniline | 10 | 10 U | 10 U | 10 U | 10 U | 10 U | 10 U | 10 U |
| Hexachlorobutadiene | 10 | 10 U | 10 U | 10 U | 10 U | 10 U | 10 U | 10 U |
| 4-Chloro-3-Methylphenol | 10 | 10 U | 10 U | 10 U | 10 U | 10 U | 10 U | 10 U |
| 2-Methylnaphthalene | 10 | 10 U | 10 U | 10 U | 10 U | 10 U | 10 U | 10 U |
| Hexachlorocyclopentadiene | 10 | 10 UJ | 10 UJ | 10 U | 10 U | 10 U | 10 U | 10 U |
| 2,4,6-Trichlorophenol | 10 | 10 U | 10 U | 10 U | 10 U | 10 U | 10 U | 10 U |
| 2,4,5-Trichlorophenol | 50 | 50 U | 50 U | 50 U | 50 U | 50 U | 50 U | 50 U |
| 2-Chloronaphthalene | 10 | 10 U | 10 U | 10 U | 10 U | 10 U | 10 U | 10 U |
| 2-Nitroaniline | 50 | 50 U | 50 U | 50 U | 50 U | 50 U | 50 U | 50 U |
| Dimethylphthalate | 10 | 10 U | 10 U | 10 U | 10 U | 10 U | 10 U | 10 U |
| Acenaphthylene | 10 | 10 U | 10 U | 10 U | 10 U | 10 U | 10 U | 10 U |
| 2,6-Dinitrotoluene | 10 | 10 U | 10 U | 10 U | 10 U | 10 U | 10 U | 10 U |

Table 2
Validation / Summary Table

| SAMPLE LOCATION: | | EPMW317BXX02XX | EPMW318XXX02XX | EPMW319XXX02XX | O6MW320XXX02XX | O6MW321XXX02XX | O6MW322XXX02XX | O6MW323XXX02XX |
|---|---|---|---|---|---|---|---|---|
| LAB NUMBER: | | 901109209B | 901109210A | 901110603A | 901105609A | 901105610A | 901105611A | 901105612A |
| DATE SAMPLED: | | 11/07/90 | 11/08/90 | 11/09/90 | 11/06/90 | 11/06/90 | 11/06/90 | 11/06/90 |
| DATE EXTRACTED: | | 11/12/90 | 11/12/90 | 11/16/90 | 11/09/90 | 11/09/90 | 11/09/90 | 11/09/90 |
| DATE ANALYZED: | | 11/21/90 | 11/21/90 | 11/28/90 | 11/15/90 | 11/15/90 | 11/15/90 | 11/15/90 |
| ANALYTE | CRQL | | | | | | | |
| 3-Nitroaniline | 50 | 50 U | 50 U | 50 U | 50 U | 50 U | 50 U | 50 U |
| Acenaphthene | 10 | 10 U | 10 U | 10 U | 10 U | 10 U | 10 U | 10 U |
| 2,4-Dinitrophenol | 50 | 50 U | 50 U | 50 U | 50 U | 50 U | 50 U | 50 U |
| 4-Nitrophenol | 50 | 50 UJ | 50 UJ | 50 UJ | 50 U | 50 U | 50 U | 50 U |
| Dibenzofuran | 10 | 10 U | 10 U | 10 U | 10 U | 10 U | 10 U | 10 U |
| 2,4-Dinitrotoluene | 10 | 10 U | 10 U | 10 U | 10 U | 10 U | 10 U | 10 U |
| Diethylphthalate | 10 | 10 U | 10 U | 10 U | 10 U | 10 U | 10 U | 10 U |
| 4-Chlorophenyl-phenylether | 10 | 10 U | 10 U | 10 U | 10 U | 10 U | 10 U | 10 U |
| Fluorene | 10 | 10 U | 10 U | 10 U | 10 U | 10 U | 10 U | 10 U |
| 4-Nitroaniline | 50 | 50 UJ | 50 UJ | 50 UJ | 50 U | 50 U | 50 U | 50 U |
| 4,6-Dinitro-2-methylphenol | 50 | 50 U | 50 U | 50 U | 50 U | 50 U | 50 U | 50 U |
| N-Nitrosodiphenylamine | 10 | 10 U | 10 U | 10 U | 10 U | 10 U | 10 U | 10 U |
| 4-Bromophenyl-phenylether | 10 | 10 U | 10 U | 10 U | 10 U | 10 U | 10 U | 10 U |
| Hexachlorobenzene | 10 | 10 U | 10 U | 10 U | 10 U | 10 U | 10 U | 10 U |
| Pentachlorophenol | 50 | 50 U | 50 U | 50 U | 50 U | 50 U | 50 U | 50 U |
| Phenanthrene | 10 | 10 U | 10 U | 10 U | 10 U | 10 U | 10 U | 10 U |
| Anthracene | 10 | 10 U | 10 U | 10 U | 10 U | 10 U | 10 U | 10 U |
| Di-n-butylphthalate | 10 | 10 U | 10 U | 10 U | 10 U | 10 U | 10 U | 10 U |
| Fluoranthene | 10 | 10 U | 10 U | 10 U | 10 U | 10 U | 0.8 JJ | 10 U |
| Pyrene | 10 | 10 U | 10 U | 10 U | 10 U | 10 U | 0.7 JJ | 10 U |
| Butylbenzylphthalate | 10 | 10 U | 10 U | 10 U | 10 U | 10 U | 10 U | 10 U |
| 3,3'-Dichlorobenzidine | 20 | 20 U | 20 U | 20 U | 20 U | 20 U | 20 U | 20 U |
| Benzo(a)Anthracene | 10 | 10 U | 10 U | 10 U | 10 U | 10 U | 10 U | 10 U |
| Chrysene | 10 | 10 U | 10 U | 10 U | 10 U | 10 U | 10 U | 10 U |
| bis(2-Ethylhexyl)phthalate | 10 | 10 U | 10 U | 10 U | 15 | 1 JJ | 5 JJ | 26 |
| Di-n-octylphthalate | 10 | 10 U | 10 U | 10 U | 10 U | 10 U | 10 U | 10 U |
| Benzo(b)Fluoranthene | 10 | 10 U | 10 U | 10 U | 10 U | 10 U | 10 U | 10 U |
| Benzo(k)Fluoranthene | 10 | 10 U | 10 U | 10 U | 10 U | 10 U | 10 U | 10 U |
| Benzo(a)Pyrene | 10 | 10 U | 10 U | 10 U | 10 U | 10 U | 10 U | 10 U |
| Indeno(1,2,3-c,d)Pyrene | 10 | 10 U | 10 U | 10 U | 10 U | 10 U | 10 U | 10 U |
| Dibenz(a,h)Anthracene | 10 | 10 U | 10 U | 10 U | 10 U | 10 U | 10 U | 10 U |
| Benzo(g,h,i)perylene | 10 | 10 U | 10 U | 10 U | 10 U | 10 U | 10 U | 10 U |
| Dilution Factor: | | .94 | 1.0 | .96 | .94 | 1.0 | .96 | .98 |
| Associated Method Blank: | | 94526 | 94526 | 94591 | 94512 | 94512 | 94512 | 94512 |
| Associated Equipment Blank: | | BNQSXX3XXX02XX | BNQSXX3XXX02XX | - | BNQSXX1XXX02XX | BNQSXX1XXX02XX | BNQSXX1XXX02XX | BNQSXX1XXX02XX |
| Associated Field Blank: | | - | - | - | - | - | - | - |

Table 2
Validation / Summary Table

| SAMPLE LOCATION: | | EPMW301XXX02XD | EPMW301XXX02XX | EPMW302XXX02XX | EPMW303XXX02XX | EPMW304XXX02XX | EPMW305XXX02XX | EPMW306XXX02XD | EPMW306XXX02XX |
|---|---|---|---|---|---|---|---|---|---|
| LAB NUMBER: | | 901105602D | 901105601E | 901105605B | 901105606B | 901105607B | 901105608B | 901106902D | 901106901E |
| DATE SAMPLED: | | 11/05/90 | 11/05/90 | 11/06/90 | 11/06/90 | 11/06/90 | 11/06/90 | 11/07/90 | 11/07/90 |
| DATE EXTRACTED: | | 11/07/90 | 11/07/90 | 11/07/90 | 11/07/90 | 11/07/90 | 11/07/90 | 11/11/90 | 11/11/90 |
| DATE ANALYZED: | | 11/15/90 | 11/15/90 | 11/15/90 | 11/15/90 | 11/15/90 | 11/15/90 | 11/16/90 | 11/16/90 |
| ANALYTE | CRQL | | | | | | | | |
| alpha-BHC | 0.05 | 0.05 U | 0.05 U | 0.05 U | 0.05 U | 0.052 U | 0.053 U | 0.05 U | 0.05 U |
| beta-BHC | 0.05 | 0.05 U | 0.05 U | 0.05 U | 0.05 U | 0.052 U | 0.053 U | 0.05 U | 0.05 U |
| delta-BHC | 0.05 | 0.05 U | 0.05 U | 0.05 U | 0.05 U | 0.052 U | 0.053 U | 0.05 U | 0.05 U |
| gamma-BHC (Lindane) | 0.05 | 0.05 U | 0.05 U | 0.05 U | 0.05 U | 0.052 U | 0.053 U | 0.05 U | 0.05 U |
| Heptachlor | 0.05 | 0.05 U | 0.05 U | 0.05 U | 0.05 U | 0.052 U | 0.053 U | 0.05 U | 0.05 U |
| Aldrin | 0.05 | 0.05 U | 0.05 U | 0.05 U | 0.05 U | 0.052 U | 0.053 U | 0.05 U | 0.05 U |
| Heptachlor Epoxide | 0.05 | 0.05 U | 0.05 U | 0.05 U | 0.05 U | 0.052 U | 0.053 U | 0.05 U | 0.05 U |
| Endosulfan I | 0.05 | 0.05 U | 0.05 U | 0.05 U | 0.05 U | 0.052 U | 0.053 U | 0.05 U | 0.05 U |
| Dieldrin | 0.1 | 0.1 U | 0.1 U | 0.1 U | 0.1 U | 0.1 U | 0.11 U | 0.1 U | 0.1 U |
| 4,4'-DDE | 0.1 | 0.1 U | 0.1 U | 0.1 U | 0.1 U | 0.1 U | 0.11 U | 0.1 U | 0.1 U |
| Endrin | 0.1 | 0.1 U | 0.1 U | 0.1 U | 0.1 U | 0.1 U | 0.11 U | 0.1 U | 0.1 U |
| Endosulfan II | 0.1 | 0.1 U | 0.1 U | 0.1 U | 0.1 U | 0.1 U | 0.11 U | 0.1 U | 0.1 U |
| 4,4'-DDD | 0.1 | 0.1 U | 0.1 U | 0.1 U | 0.1 U | 0.1 U | 0.11 U | 0.1 U | 0.1 U |
| Endosulfan Sulfate | 0.1 | 0.1 U | 0.1 U | 0.1 U | 0.1 U | 0.1 U | 0.11 U | 0.1 U | 0.1 U |
| 4,4'-DDT | 0.1 | 0.1 U | 0.1 U | 0.1 U | 0.1 U | 0.1 U | 0.11 U | 0.1 U | 0.1 U |
| Methoxychlor | 0.5 | 0.5 U | 0.5 U | 0.5 U | 0.5 U | 0.52 U | 0.53 U | 0.5 U | 0.5 U |
| Endrin Ketone | 0.1 | 0.1 U | 0.1 U | 0.1 U | 0.1 U | 0.1 U | 0.11 U | 0.1 U | 0.1 U |
| alpha-Chlordane | 0.5 | 0.5 U | 0.5 U | 0.5 U | 0.5 U | 0.52 U | 0.53 U | 0.5 U | 0.5 U |
| gamma-Chlordane | 0.5 | 0.5 U | 0.5 U | 0.5 U | 0.5 U | 0.52 U | 0.53 U | 0.5 U | 0.5 U |
| Toxaphene | 1 | 1 U | 1 U | 1 U | 1 U | 1 U | 1.1 U | 1 U | 1 U |
| Aroclor-1016 | 0.5 | 0.5 U | 0.5 U | 0.5 U | 0.5 U | 0.52 U | 0.53 U | 0.5 U | 0.5 U |
| Aroclor-1221 | 0.5 | 0.5 U | 0.5 U | 0.5 U | 0.5 U | 0.52 U | 0.53 U | 0.5 U | 0.5 U |
| Aroclor-1232 | 0.5 | 0.5 U | 0.5 U | 0.5 U | 0.5 U | 0.52 U | 0.53 U | 0.5 U | 0.5 U |
| Aroclor-1242 | 0.5 | 0.5 U | 0.5 U | 0.5 U | 0.5 U | 0.52 U | 0.53 U | 0.5 U | 0.5 U |
| Aroclor-1248 | 0.5 | 0.5 U | 0.5 U | 0.5 U | 0.5 U | 0.52 U | 0.53 U | 0.5 U | 0.5 U |
| Aroclor-1254 | 1 | 1 U | 1 U | 1 U | 1 U | 1 U | 1.1 U | 1 U | 1 U |
| Aroclor-1260 | 1 | 1 U | 1 U | 1 U | 1 U | 1 U | 1.1 U | 1 U | 1 U |
| Dilution Factor: | | 1.0 | 1.0 | 1.0 | 1.0 | 1.0 | 1.0 | 1.0 | 1.0 |
| Associated Method Blank: | | 901105615AB | 901105615AB | 901105615AB | 901105615AB | 901105615AB | 901105615AB | 901105615AB | 901105615AB |
| Associated Equipment Blank: | | BNQSXX1XXX02XX | BNQSXX1XXX02XX | BNQSXX1XXX02XX | BNQSXX1XXX02XX | BNQSXX1XXX02XX | BNQSXX1XXX02XX | BNQSXX2XXX02XX | BNQSXX2XXX02XX |
| Associated Field Blank: | | - | - | - | - | - | - | - | - |

Table 2
Validation / Summary Table

| SAMPLE LOCATION: | | EPMW307XXX02XX | EPMW308XXX02XX | EPMW309AXX02XX | EPMW309BXX02XX | EPMW310XXX02XX | EPMW311XXX02XD | EPMW311XXX02XX | EPMW312XXX02XX |
|---|---|---|---|---|---|---|---|---|---|
| LAB NUMBER: | | 901106905B | 901106906B | 901106907B | 901106908B | 901113201B | 901113203D | 901113202E | 901110602B |
| DATE SAMPLED: | | 11/07/90 | 11/07/90 | 11/07/90 | 11/07/90 | 11/13/90 | 11/13/90 | 11/13/90 | 11/09/90 |
| DATE EXTRACTED: | | 11/11/90 | 11/07/90 | 11/11/90 | 11/11/90 | 11/18/90 | 11/18/90 | 11/18/90 | 11/13/90 |
| DATE ANALYZED: | | 11/16/90 | 11/15/90 | 11/16/90 | 11/16/90 | 11/29/90 | 11/28/90 | 11/28/90 | 11/30/90 |
| ANALYTE | CRQL | | | | | | | | |
| alpha-BHC | 0.05 | 0.05 U | 0.05 U | 0.05 U | 0.05 U | 0.05 U | 0.05 U | 0.05 U | 0.026 U |
| beta-BHC | 0.05 | 0.05 U | 0.05 U | 0.05 U | 0.05 U | 0.05 U | 0.05 U | 0.05 U | 0.026 U |
| delta-BHC | 0.05 | 0.05 U | 0.05 U | 0.05 U | 0.05 U | 0.05 U | 0.05 U | 0.05 U | 0.026 U |
| gamma-BHC (Lindane) | 0.05 | 0.05 U | 0.05 U | 0.05 U | 0.05 U | 0.05 U | 0.05 U | 0.05 U | 0.026 U |
| Heptachlor | 0.05 | 0.05 U | 0.05 U | 0.05 U | 0.05 U | 0.05 U | 0.05 U | 0.05 U | 0.026 U |
| Aldrin | 0.05 | 0.05 U | 0.05 U | 0.05 U | 0.05 U | 0.05 U | 0.05 U | 0.05 U | 0.026 U |
| Heptachlor Epoxide | 0.05 | 0.05 U | 0.05 U | 0.05 U | 0.05 U | 0.05 U | 0.05 U | 0.05 U | 0.026 U |
| Endosulfan I | 0.05 | 0.05 U | 0.05 U | 0.05 U | 0.05 U | 0.05 U | 0.05 U | 0.05 U | 0.026 U |
| Dieldrin | 0.1 | 0.1 U | 0.1 U | 0.1 U | 0.1 U | 0.1 U | 0.1 U | 0.1 U | 0.052 U |
| 4,4'-DDE | 0.1 | 0.1 U | 0.1 U | 0.1 U | 0.1 U | 0.1 U | 0.1 U | 0.1 U | 0.052 U |
| Endrin | 0.1 | 0.1 U | 0.1 U | 0.1 U | 0.1 U | 0.1 U | 0.1 U | 0.1 U | 0.052 U |
| Endosulfan II | 0.1 | 0.1 U | 0.1 U | 0.1 U | 0.1 U | 0.1 U | 0.1 U | 0.1 U | 0.052 U |
| 4,4'-DDD | 0.1 | 0.1 U | 0.1 U | 0.1 U | 0.1 U | 0.1 U | 0.1 U | 0.1 U | 0.052 U |
| Endosulfan Sulfate | 0.1 | 0.1 U | 0.1 U | 0.1 U | 0.1 U | 0.008 JJ | 0.1 U | 0.1 U | 0.052 U |
| 4,4'-DDT | 0.1 | 0.1 U | 0.1 U | 0.1 U | 0.1 U | 0.1 U | 0.1 U | 0.1 U | 0.052 U |
| Methoxychlor | 0.5 | 0.5 U | 0.5 U | 0.5 U | 0.5 U | 0.5 U | 0.5 U | 0.5 U | 0.26 U |
| Endrin Ketone | 0.1 | 0.1 U | 0.1 U | 0.1 U | 0.1 U | 0.1 U | 0.1 U | 0.1 U | 0.052 U |
| alpha-Chlordane | 0.5 | 0.5 U | 0.5 U | 0.5 U | 0.5 U | 0.5 U | 0.5 U | 0.5 U | 0.26 U |
| gamma-Chlordane | 0.5 | 0.5 U | 0.5 U | 0.5 U | 0.5 U | 0.5 U | 0.5 U | 0.5 U | 0.26 U |
| Toxaphene | 1 | 1 U | 1 U | 1 U | 1 U | 1 U | 1 U | 1 U | 0.52 U |
| Aroclor-1016 | 0.5 | 0.5 U | 0.5 U | 0.5 U | 0.5 U | 0.5 U | 0.5 U | 0.5 U | 0.26 U |
| Aroclor-1221 | 0.5 | 0.5 U | 0.5 U | 0.5 U | 0.5 U | 0.5 U | 0.5 U | 0.5 U | 0.26 U |
| Aroclor-1232 | 0.5 | 0.5 U | 0.5 U | 0.5 U | 0.5 U | 0.5 U | 0.5 U | 0.5 U | 0.26 U |
| Aroclor-1242 | 0.5 | 0.5 U | 0.5 U | 0.5 U | 0.5 U | 0.5 U | 0.5 U | 0.5 U | 0.26 U |
| Aroclor-1248 | 0.5 | 0.5 U | 0.5 U | 0.5 U | 0.5 U | 0.5 U | 0.5 U | 0.5 U | 0.26 U |
| Aroclor-1254 | 1 | 1 U | 1 U | 1 U | 1 U | 1 U | 1 U | 1 U | 0.52 U |
| Aroclor-1260 | 1 | 1 U | 1 U | 1 U | 1 U | 1 U | 1 U | 1 U | 0.52 U |
| Dilution Factor: | | 1.0 | 1.0 | 1.0 | 1.0 | 1.0 | 1.0 | 1.0 | 1.0 |
| Associated Method Blank: | | 901105615AB | 901105615AB | 901105615AB | 901105615AB | 901113208AB | 901113208AB | 901113208AB | 901105615AB |
| Associated Equipment Blank: | | BNQSXX2XXX02XX | BNQSXX2XXX02XX | BNQSXX2XXX02XX | BNQSXX2XXX02XX | BNQSXX4XXX02XX | BNQSXX4XXX02XX | BNQSXX4XXX02XX | - |
| Associated Field Blank: | | - | - | - | - | - | - | - | - |

Table 2
Validation / Summary Table

| SAMPLE LOCATION: | | EPMW313XXX02XX | EPMW314AXX02XX | EPMW314BXX02XX | EPMW315AXX02XX | EPMW315BXX02XX | EPMW316AXX02XX | EPMW316BXX02XX | EPMW317AXX02XX |
|---|---|---|---|---|---|---|---|---|---|
| LAB NUMBER: | | 901113204B | 901109202ER | 901109203B | 901109204B | 901109205B | 901109206B | 901109207B | 901109208B |
| DATE SAMPLED: | | 11/13/90 | 11/08/90 | 11/08/90 | 11/08/90 | 11/08/90 | 11/08/90 | 11/08/90 | 11/07/90 |
| DATE EXTRACTED: | | 11/18/90 | 11/11/90 | 11/11/90 | 11/11/90 | 11/11/90 | 11/11/90 | 11/11/90 | 11/11/90 |
| DATE ANALYZED: | | 11/29/90 | 11/16/90 | 11/16/90 | 11/16/90 | 11/16/90 | 11/16/90 | 11/16/90 | 11/16/90 |
| ANALYTE | CRQL | | | | | | | | |
| alpha-BHC | 0.05 | 0.05 U | 0.05 U | 0.05 U | 0.051 U | 0.05 U | 0.05 U | 0.05 U | 0.05 U |
| beta-BHC | 0.05 | 0.05 U | 0.05 U | 0.05 U | 0.051 U | 0.05 U | 0.05 U | 0.05 U | 0.05 U |
| delta-BHC | 0.05 | 0.05 U | 0.05 U | 0.05 U | 0.051 U | 0.05 U | 0.05 U | 0.05 U | 0.05 U |
| gamma-BHC (Lindane) | 0.05 | 0.05 U | 0.05 U | 0.05 U | 0.051 U | 0.05 U | 0.05 U | 0.05 U | 0.05 U |
| Heptachlor | 0.05 | 0.05 U | 0.05 U | 0.05 U | 0.051 U | 0.05 U | 0.05 U | 0.05 U | 0.05 U |
| Aldrin | 0.05 | 0.05 U | 0.05 U | 0.05 U | 0.051 U | 0.05 U | 0.05 U | 0.05 U | 0.05 U |
| Heptachlor Epoxide | 0.05 | 0.05 U | 0.05 U | 0.05 U | 0.051 U | 0.05 U | 0.05 U | 0.05 U | 0.05 U |
| Endosulfan I | 0.05 | 0.05 U | 0.05 U | 0.05 U | 0.051 U | 0.05 U | 0.05 U | 0.05 U | 0.05 U |
| Dieldrin | 0.1 | 0.1 U | 0.1 U | 0.1 U | 0.1 U | 0.1 U | 0.1 U | 0.1 U | 0.1 U |
| 4,4'-DDE | 0.1 | 0.1 U | 0.1 U | 0.1 U | 0.1 U | 0.1 U | 0.1 U | 0.1 U | 0.1 U |
| Endrin | 0.1 | 0.1 U | 0.1 U | 0.1 U | 0.1 U | 0.1 U | 0.1 U | 0.1 U | 0.1 U |
| Endosulfan II | 0.1 | 0.1 U | 0.1 U | 0.1 U | 0.1 U | 0.1 U | 0.1 U | 0.1 U | 0.1 U |
| 4,4'-DDD | 0.1 | 0.1 U | 0.1 U | 0.1 U | 0.1 U | 0.1 U | 0.1 U | 0.1 U | 0.1 U |
| Endosulfan Sulfate | 0.1 | 0.1 U | 0.1 U | 0.1 U | 0.1 U | 0.22 | 0.1 U | 0.1 U | 0.1 U |
| 4,4'-DDT | 0.1 | 0.1 U | 0.1 U | 0.1 U | 0.1 U | 0.1 U | 0.1 U | 0.1 U | 0.1 U |
| Methoxychlor | 0.5 | 0.5 U | 0.5 U | 0.5 U | 0.51 U | 0.5 U | 0.5 U | 0.5 U | 0.5 U |
| Endrin Ketone | 0.1 | 0.1 U | 0.1 U | 0.1 U | 0.1 U | 0.1 U | 0.1 U | 0.1 U | 0.1 U |
| alpha-Chlordane | 0.5 | 0.5 U | 0.5 U | 0.5 U | 0.51 U | 0.5 U | 0.5 U | 0.5 U | 0.5 U |
| gamma-Chlordane | 0.5 | 0.5 U | 0.5 U | 0.5 U | 0.51 U | 0.5 U | 0.5 U | 0.5 U | 0.5 U |
| Toxaphene | 1 | 1 U | 1 U | 1 U | 1 U | 1 U | 1 U | 1 U | 1 U |
| Aroclor-1016 | 0.5 | 0.5 U | 0.5 U | 0.5 U | 0.51 U | 0.5 U | 0.5 U | 0.5 U | 0.5 U |
| Aroclor-1221 | 0.5 | 0.5 U | 0.5 U | 0.5 U | 0.51 U | 0.5 U | 0.5 U | 0.5 U | 0.5 U |
| Aroclor-1232 | 0.5 | 0.5 U | 0.5 U | 0.5 U | 0.51 U | 0.5 U | 0.5 U | 0.5 U | 0.5 U |
| Aroclor-1242 | 0.5 | 0.5 U | 0.5 U | 0.5 U | 0.51 U | 0.5 U | 0.5 U | 0.5 U | 0.5 U |
| Aroclor-1248 | 0.5 | 0.5 U | 0.5 U | 0.5 U | 0.51 U | 0.5 U | 0.5 U | 0.5 U | 0.5 U |
| Aroclor-1254 | 1 | 1 U | 1 U | 1 U | 1 U | 1 U | 1 U | 1 U | 1 U |
| Aroclor-1260 | 1 | 1 U | 1 U | 1 U | 1 U | 1 U | 1 U | 1 U | 1 U |
| Dilution Factor: | | 1.0 | 1.0 | 1.0 | 1.0 | 1.0 | 1.0 | 1.0 | 1.0 |
| Associated Method Blank: | | 901113208AB | 901106911AB | 901105615AB | 901106911AB | 901106911AB | 901106911AB | 901106911AB | 901106911AB |
| Associated Equipment Blank: | | BNQSXX4XXX02XX | BNQSXX3XXX02XX | BNQSXX3XXX02XX | BNQSXX3XXX02XX | BNQSXX3XXX02XX | BNQSXX3XXX02XX | BNQSXX3XXX02XX | BNQSXX3XXX02XX |
| Associated Field Blank: | | - | - | - | - | - | - | - | - |

Table 2
Validation / Summary Table

| SAMPLE LOCATION: | EPMW317BXX02XX | EPMW318XXX02XX | EPMW319XXX02XX | O6MW320XXX02XX | O6MW321XXX02XX | O6MW322XXX02XX | O6MW323XXX02XX |
|---|---|---|---|---|---|---|---|
| LAB NUMBER: | 901109209B | 901109210B | 901113205A | 901105609B | 901105610B | 901105611B | 901105612B |
| DATE SAMPLED: | 11/07/90 | 11/08/90 | 11/09/90 | 11/06/90 | 11/06/90 | 11/06/90 | 11/06/90 |
| DATE EXTRACTED: | 11/11/90 | 11/11/90 | 11/18/90 | 11/07/90 | 11/07/90 | 11/07/90 | 11/07/90 |
| DATE ANALYZED: | 11/16/90 | 11/16/90 | 11/29/90 | 11/15/90 | 11/15/90 | 11/15/90 | 11/16/90 |
| ANALYTE | CRQL | | | | | | |
| alpha-BHC | 0.05 | 0.05 U | 0.05 U | 0.05 U | 0.05 U | 0.051 U | 0.061 U |
| beta-BHC | 0.05 | 0.05 U | 0.05 U | 0.05 U | 0.05 U | 0.051 U | 0.061 U |
| delta-BHC | 0.05 | 0.05 U | 0.05 U | 0.05 U | 0.05 U | 0.051 U | 0.061 U |
| gamma-BHC (Lindane) | 0.05 | 0.05 U | 0.05 U | 0.05 U | 0.05 U | 0.051 U | 0.061 U |
| Heptachlor | 0.05 | 0.05 U | 0.05 U | 0.05 U | 0.05 U | 0.051 U | 0.061 U |
| Aldrin | 0.05 | 0.05 U | 0.05 U | 0.05 U | 0.05 U | 0.051 U | 0.061 U |
| Heptachlor Epoxide | 0.05 | 0.05 U | 0.05 U | 0.05 U | 0.05 U | 0.051 U | 0.061 U |
| Endosulfan I | 0.05 | 0.05 U | 0.05 U | 0.05 U | 0.05 U | 0.051 U | 0.061 U |
| Dieldrin | 0.1 | 0.1 U | 0.1 U | 0.1 U | 0.1 U | 0.1 U | 0.12 U |
| 4,4'-DDE | 0.1 | 0.1 U | 0.1 U | 0.1 U | 0.1 U | 0.1 U | 0.12 U |
| Endrin | 0.1 | 0.1 U | 0.1 U | 0.1 U | 0.1 U | 0.1 U | 0.12 U |
| Endosulfan II | 0.1 | 0.1 U | 0.1 U | 0.1 U | 0.1 U | 0.1 U | 0.12 U |
| 4,4'-DDD | 0.1 | 0.1 U | 0.1 U | 0.1 U | 0.1 U | 0.1 U | 0.12 U |
| Endosulfan Sulfate | 0.1 | 0.1 U | 0.25 | 0.1 U | 0.1 U | 0.1 U | 0.12 U |
| 4,4'-DDT | 0.1 | 0.1 U | 0.1 U | 0.1 U | 0.1 U | 0.1 U | 0.12 U |
| Methoxychlor | 0.5 | 0.5 U | 0.5 U | 0.5 U | 0.5 U | 0.51 U | 0.61 U |
| Endrin Ketone | 0.1 | 0.1 U | 0.1 U | 0.1 U | 0.1 U | 0.1 U | 0.12 U |
| alpha-Chlordane | 0.5 | 0.5 U | 0.5 U | 0.5 U | 0.5 U | 0.51 U | 0.61 U |
| gamma-Chlordane | 0.5 | 0.5 U | 0.5 U | 0.5 U | 0.5 U | 0.51 U | 0.61 U |
| Toxaphene | 1 | 1 U | 1 U | 1 U | 1 U | 1 U | 1.2 U |
| Aroclor-1016 | 0.5 | 0.5 U | 0.5 U | 0.5 U | 0.5 U | 0.51 U | 0.61 U |
| Aroclor-1221 | 0.5 | 0.5 U | 0.5 U | 0.5 U | 0.5 U | 0.51 U | 0.61 U |
| Aroclor-1232 | 0.5 | 0.5 U | 0.5 U | 0.5 U | 0.5 U | 0.51 U | 0.61 U |
| Aroclor-1242 | 0.5 | 0.5 U | 0.5 U | 0.5 U | 0.5 U | 0.51 U | 0.61 U |
| Aroclor-1248 | 0.5 | 0.5 U | 0.5 U | 0.5 U | 0.5 U | 0.51 U | 0.61 U |
| Aroclor-1254 | 1 | 1 U | 1 U | 1 U | 1 U | 1 U | 1.2 U |
| Aroclor-1260 | 1 | 1 U | 1 U | 1 U | 1 U | 1 U | 1.2 U |
| Dilution Factor: | | 1.0 | 1.0 | 1.0 | 1.0 | 1.0 | 1.0 |
| Associated Method Blank: | | 901106911AB | 901106911AB | 901113208AB | 901105615AB | 901105615AB | 901105615AB | 901105615AB |
| Associated Equipment Blank: | | BNQSXX3XXX02XX | BNQSXX3XXX02XX | BNQSXX4XXX02XX | BNQSXX1XXX02XX | BNQSXX1XXX02XX | BNQSXX1XXX02XX | BNQSXX1XXX02XX |
| Associated Field Blank: | | - | - | - | - | - | - | - |

Table 2
Validation / Summary Table

| SAMPLE LOCATION: | | EPMW301XXX02XD | EPMW301XXX02XX | EPMW302XXX02XX | EPMW303XXX02XX | EPMW304XXX02XX | EPMW305XXX02XX | EPMW306XXX02XD | EPMW306XXX02XX |
|---|---|---|---|---|---|---|---|---|---|
| LAB NUMBER: | | 9011064-02 | 9011064-01 | 9011064-05 | 9011064-06 | 9011064-07 | 9011064-08 | 9011070-02 | 9011070-01 |
| DATE SAMPLED: | | 11/05/90 | 11/05/90 | 11/06/90 | 11/06/90 | 11/06/90 | 11/06/90 | 11/07/90 | 11/07/90 |
| ANALYTE | CRQL | | | | | | | | |
| Aluminum | 200 | 45.3 U | 129 U | 213 U | 17.9 U | 149 U | 941 | 9.9 U | 9.9 U |
| Antimony | 60 | 42.0 U | 42.0 U | 42.0 U | 42.0 U | 42.0 U | 42.0 U | 42.0 U | 42.0 U |
| Arsenic | 10 | 2.6 U | 2.6 U | 2.6 U | 19.2 | 2.6 U | 5.8 [] | 2.6 U | 2.6 U |
| Barium | 200 | 2.6 U | 3.1 U | 2.9 U | 2.2 U | 2.6 U | 5.5 [] | 4.2 U | 4.2 U |
| Beryllium | 5 | 0.58 U | 0.56 U | 0.56 U | 0.56 U | 0.56 U | 0.56 U | 0.60 U | 0.60 U |
| Cadmium | 5 | 1.4 U | 1.4 U | 1.4 U | 1.4 U | 1.4 U | 1.4 U | 1.4 U | 1.4 U |
| Calcium | 5000 | 1910 [] | 1960 [] | 3900 [] | 9120 | 3500 [] | 2100 [] | 5260 | 5330 |
| Chromium | 10 | 1.7 U | 2.4 [] | 1.7 U | 1.7 U | 1.7 U | 2.2 [] | 2.1 U | 1.7 U |
| Cobalt | 50 | 2.4 UJ | 2.4 UJ | 2.4 UJ | 2.4 UJ | 2.4 UJ | 2.4 UJ | 2.4 U | 2.4 U |
| Copper | 25 | 3.7 U | 6.4 U | 1.7 U | 1.0 U | 12.1 U | 11.2 U | 4.0 U | 7.7 U |
| Iron | 100 | 82.0 U | 161 U | 281 U | 711 | 209 U | 1120 | 11.0 U | 14.6 U |
| Lead | 3 | 3.6 U | 8.6 U | 2.9 U | 3.4 U | 6.9 U | 13.7 U | 1.8 U | 1.8 U |
| Magnesium | 5000 | 644 [] | 658 [] | 2000 [] | 4790 [] | 1640 [] | 890 [] | 1420 [] | 1430 [] |
| Manganese | 15 | 57.7 | 61.1 | 181 | 138 | 308 | 25.8 | 27.1 | 27.1 |
| Mercury | 0.2 | 0.20 U | 0.20 U | 0.20 U | 0.20 U | 0.20 U | 0.20 U | 0.20 U | 0.20 U |
| Nickel | 40 | 9.0 U | 6.9 U | 6.9 U | 6.9 U | 6.9 U | 9.2 U | 6.9 U | 6.9 U |
| Potassium | 5000 | 696 U | 790 U | 1580 [] | 3360 [] | 1470 [] | 3410 [] | 1320 U | 1300 U |
| Selenium | 5 | 2.9 U | 2.9 U | 2.9 U | 2.9 UJ | 2.9 U | 2.9 UJ | 2.9 U | 2.9 U |
| Silver | 10 | 9.1 UJ | 9.1 UJ | 9.1 UJ | 9.1 UJ | 9.1 UJ | 9.1 UJ | 9.1 UJ | 9.1 UJ |
| Sodium | 5000 | 2090 [] | 2130 [] | 9920 | 26600 | 3560 [] | 40900 | 8540 | 8690 |
| Thallium | 10 | 1.6 U | 1.6 U | 1.6 U | 1.6 U | 1.6 U | 1.6 U | 1.6 U | 1.6 U |
| Vanadium | 50 | 1.2 U | 1.2 U | 2.7 U | 1.2 U | 1.9 U | 1.2 U | 1.2 U | 1.2 U |
| Zinc | 20 | 1.7 U | 6.0 [] | 1.7 U | 1.7 U | 7.7 [] | 11.5 [] | 11.6 U | 13.3 U |
| Cyanide | 10 | 10.0 U | 10.0 U | 10.0 U | 10.0 U | 10.0 U | 10.0 U | 10.0 U | 10.0 U |
| Associated Method Blank: | | BN11064W | BN11064W | BN11064W | BN11064W | BN11064W | BN11064W | BNPMW306W | BNPMW306W |
| Associated Equipment Blank: | | BNQSXX1XXX02XX | BNQSXX1XXX02XX | BNQSXX1XXX02XX | BNQSXX1XXX02XX | BNQSXX1XXX02XX | BNQSXX1XXX02XX | BNQSXX2XXX02XX | BNQSXX2XXX02XX |
| Associated Field Blank: | | - | - | - | - | - | - | - | - |

PROJECT: Naval Air Station Brunswick - Round 5 | Inorganic Aqueous Analysis (ug/L) | 03/14/91

Table 2
Validation / Summary Table

| SAMPLE LOCATION: | | EPMW307XXX02XX | EPMW308XXX02XX | EPMW309AXX02XX | EPMW309BXX02XX | EPMW310XXX02XX | EPMW311XXX02XD | EPMW311XXX02XX | EPMW312XXX02XX |
|---|---|---|---|---|---|---|---|---|---|
| LAB NUMBER: | | 9011070-05 | 9011070-06 | 9011070-07 | 9011070-08 | 9011107-08 | 9011107-10 | 9011107-09 | 9011107-11 |
| DATE SAMPLED: | | 11/07/90 | 11/07/90 | 11/07/90 | 11/07/90 | 11/13/90 | 11/13/90 | 11/13/90 | 11/09/90 |
| ANALYTE | CRQL | | | | | | | | |
| Aluminum | 200 | 9.9 U | 117 U | 29.4 U | 56.7 U | 14.4 U | 224 U | 242 U | 81.5 U |
| Antimony | 60 | 42.0 U | 42.0 U | 42.0 U | 42.0 U | 42.0 U | 42.0 U | 42.0 U | 42.0 U |
| Arsenic | 10 | 2.6 U | 20.5 | 11.8 U | 6.9 U | 2.6 U | 2.6 U | 2.6 U | 2.8 [] |
| Barium | 200 | 4.2 U | 4.2 U | 2.6 U | 1.0 U | 1.7 U | 3.2 U | 3.2 U | 3.2 U |
| Beryllium | 5 | 0.60 U | 0.60 U | 0.60 U | 0.60 U | 0.56 U | 0.56 U | 0.56 U | 0.56 U |
| Cadmium | 5 | 1.4 U | 1.5 U | 1.9 U | 1.4 U | 1.4 U | 1.4 U | 1.4 U | 1.4 U |
| Calcium | 5000 | 10300 | 3270 [] | 2020 [] | 831 [] | 7730 | 12100 | 12100 | 12200 |
| Chromium | 10 | 1.8 U | 1.7 U | 2.8 U | 1.7 U | 1.7 U | 1.7 U | 2.1 U | 1.9 U |
| Cobalt | 50 | 2.4 U | 2.5 U | 2.4 U | 2.4 U | 2.4 U | 2.4 U | 2.4 U | 2.4 U |
| Copper | 25 | 12.6 U | 3.4 U | 2.8 U | 20.6 U | 6.1 U | 13.5 U | 14.2 U | 16.1 U |
| Iron | 100 | 35.6 [] | 190 | 54.0 U | 84.6 U | 24.6 U | 482 | 388 | 195 |
| Lead | 3 | 1.8 U | 1.8 U | 1.8 U | 1.8 U | 1.8 U | 5.1 | 3.9 | 3.3 |
| Magnesium | 5000 | 3350 [] | 1070 [] | 461 [] | 302 [] | 2420 [] | 5160 | 5190 | 3550 [] |
| Manganese | 15 | 87.4 | 6.7 U | 28.2 | 2.8 U | 4.2 U | 195 | 196 | 42.6 |
| Mercury | 0.2 | 0.20 U | 0.20 U | 0.20 U | 0.20 U | 0.20 U | 0.20 U | 0.20 U | 0.20 U |
| Nickel | 40 | 6.9 U | 6.9 U | 6.9 U | 6.9 U | 6.9 U | 12.3 U | 7.6 U | 8.1 U |
| Potassium | 5000 | 16.3 U | 3230 [] | 3340 [] | 3090 [] | 1040 U | 2270 [] | 2380 [] | 3650 [] |
| Selenium | 5 | 2.9 U | 2.9 UJ | 2.9 U | 2.9 U | 2.9 U | 2.9 U | 2.9 U | 2.9 UJ |
| Silver | 10 | 9.1 UJ | 9.1 UJ | 9.1 UJ | 9.1 UJ | 9.1 UJ | 9.1 UJ | 9.1 UJ | 9.1 UJ |
| Sodium | 5000 | 6570 | 101000 | 56400 | 53200 | 5390 | 7410 | 7340 | 52500 |
| Thallium | 10 | 1.6 U | 1.6 U | 1.6 U | 1.6 U | 1.6 U | 1.6 U | 1.6 U | 1.6 U |
| Vanadium | 50 | 1.2 U | 1.2 U | 1.2 U | 1.2 U | 1.2 U | 1.2 U | 1.2 U | 1.2 U |
| Zinc | 20 | 13.3 U | 13.3 U | 12.2 U | 13.3 U | 10.4 U | 23.6 U | 10.4 U | 10.4 U |
| Cyanide | 10 | 10.0 U | 10.0 U | 10.0 U | 10.0 U | 10.0 U | 10.0 U | 10.0 U | 10.0 U |
| Associated Method Blank: | | BNPMW306W | BNPMW306W | BNPMW306W | BNPMW306W | BR11107W | BR11107W | BR11107W | BR11107W |
| Associated Equipment Blank: | | BNQSXX2XXX02XX | BNQSXX2XXX02XX | BNQSXX2XXX02XX | BNQSXX2XXX02XX | BNQSXX4XXX02XX | BNQSXX4XXX02XX | BNQSXX4XXX02XX | BNQSXX4XXX02XX |
| Associated Field Blank: | | - | - | - | - | - | - | - | - |

PROJECT: Naval Air Station Brunswick - Round 5

Inorganic Aqueous Analysis (ug/L)

03/14/91

Table 2
Validation / Summary Table

| SAMPLE LOCATION: | EPMW313XXX02XX | EPMW314AXX02XX | EPMW314BXX02XX | EPMW315AXX02XX | EPMW315BXX02XX | EPMW316AXX02XX | EPMW316BXX02XX | EPMW317AXX02XX |
|---|---|---|---|---|---|---|---|---|
| LAB NUMBER: | 9011107-12 | 9011094-05 | 9011094-06 | 9011094-07 | 9011094-08 | 9011094-09 | 9011094-10 | 9011094-11 |
| DATE SAMPLED: | 11/13/90 | 11/08/90 | 11/08/90 | 11/08/90 | 11/08/90 | 11/08/90 | 11/08/90 | 11/07/90 |
| ANALYTE / CRQL | | | | | | | | |
| Aluminum 200 | 849 | 15.9 U | 320 U | 865 | 108 U | 64.9 U | 58.9 U | 9.9 U |
| Antimony 60 | 42.0 U | 42.0 U | 42.0 U | 42.0 U | 42.0 U | 42.0 U | 42.0 U | 42.0 U |
| Arsenic 10 | 11.2 | 2.6 U | 2.6 U | 4.9 [] | 2.6 U | 2.6 U | 2.6 U | 2.6 U |
| Barium 200 | 5.1 U | 1.8 U | 2.0 U | 5.8 [] | 2.0 U | 8.2 U | 5.2 U | 8.2 U |
| Beryllium 5 | 0.56 U | 0.56 U | 0.56 U | 0.56 U | 0.56 U | 0.60 U | 0.60 U | 0.60 U |
| Cadmium 5 | 1.4 U | 1.8 U | 1.4 U | 1.4 U | 1.4 U | 2.0 U | 1.4 U | 1.4 U |
| Calcium 5000 | 9340 U | 3860 [] | 3150 [] | 6140 | 7220 | 19300 | 9280 | 22400 |
| Chromium 10 | 2.8 U | 1.7 [] | 1.7 U | 3.4 [] | 2.9 [] | 1.7 U | 1.7 U | 1.7 U |
| Cobalt 50 | 2.9 [] | 2.4 UJ | 2.4 UJ | 2.4 UJ | 2.4 UJ | 2.4 U | 14.5 U | 3.8 U |
| Copper 25 | 10.1 U | 10.7 U | 17.8 U | 18.3 U | 9.4 U | 11.4 U | 5.2 U | 9.5 U |
| Iron 100 | 1220 | 34.7 U | 477 U | 1210 | 159 U | 149 | 81.0 U | 35.4 U |
| Lead 3 | 4.2 | 3.1 U | 3.5 U | 6.3 U | 1.8 U | 1.8 U | 1.8 U | 1.8 U |
| Magnesium 5000 | 6130 | 2110 [] | 2300 [] | 3470 [] | 2800 [] | 2200 [] | 2090 [] | 3960 [] |
| Manganese 15 | 262 | 8.5 [] | 235 | 202 | 141 | 50.4 | 65.9 | 29.5 |
| Mercury 0.2 | 0.20 U | 0.20 U | 0.20 U | 0.20 U | 0.20 U | 0.20 U | 0.20 U | 0.20 U |
| Nickel 40 | 8.3 U | 6.9 U | 6.9 U | 6.9 U | 6.9 U | 6.9 U | 6.9 U | 6.9 U |
| Potassium 5000 | 3570 [] | 1000 U | 1550 [] | 3660 [] | 1190 U | 1420 U | 1760 [] | 3210 [] |
| Selenium 5 | 2.9 U | 2.9 U | 2.9 U | 2.9 U | 2.9 U | 2.9 UJ | 2.9 U | 2.9 UJ |
| Silver 10 | 9.1 UJ | 9.1 UJ | 9.1 UJ | 9.1 UJ | 9.1 UJ | 9.1 UJ | 9.1 UJ | 9.1 UJ |
| Sodium 5000 | 32700 | 21400 | 12100 | 15900 | 4350 [] | 18700 | 5340 | 26700 |
| Thallium 10 | 1.6 U | 1.6 U | 1.6 U | 1.6 U | 1.6 U | 1.6 U | 1.6 U | 1.6 U |
| Vanadium 50 | 2.4 [] | 1.2 U | 1.2 U | 2.6 U | 1.2 U | 2.0 [] | 1.2 U | 1.2 U |
| Zinc 20 | 19.8 U | 9.5 [] | 13.9 [] | 15.1 [] | 8.9 [] | 13.3 U | 13.3 U | 12.2 U |
| Cyanide 10 | 10.0 U | 10.0 U | 10.0 U | 10.0 U | 10.0 U | 10.0 U | 10.0 U | 10.0 U |
| Associated Method Blank: | BR11107W | BN11064W | BN11064W | BN11064W | BN11064W | BNPMW306W | BNPMW306W | BNPMW306W |
| Associated Equipment Blank: | BNQSXX4XXX02XX | BNQSXX3XXX02XX | BNQSXX3XXX02XX | BNQSXX3XXX02XX | BNQSXX3XXX02XX | BNQSXX3XXX02XX | BNQSXX3XXX02XX | BNQSXX3XXX02XX |
| Associated Field Blank: | - | - | - | - | - | - | - | - |

M-24

Table 2
Validation / Summary Table

| SAMPLE LOCATION: | EPMW317BXX02XX | EPMW318XXX02XX | EPMW319XXX02XX | O6MW320XXX02XX | O6MW321XXX02XX | O6MW322XXX02XX | O6MW323XXX02XX |
|---|---|---|---|---|---|---|---|
| LAB NUMBER: | 9011094-12 | 9011094-13 | 9011107-13 | 9011064-09 | 9011064-10 | 9011064-11 | 9011064-13 |
| DATE SAMPLED: | 11/07/90 | 11/08/90 | 11/09/90 | 11/06/90 | 11/06/90 | 11/06/90 | 11/06/90 |
| ANALYTE / CRQL | | | | | | | |
| Aluminum 200 | 122 U | 211 U | 9.9 U | 9.9 U | 9.9 U | 25.0 U | 78.0 U |
| Antimony 60 | 42.0 U | 42.0 U | 42.0 U | 42.0 U | 42.0 U | 42.0 U | 42.0 U |
| Arsenic 10 | 2.6 U | 2.6 U | 2.6 U | 2.6 U | 2.6 U | 2.6 U | 3.1 [] |
| Barium 200 | 5.4 U | 2.6 U | 2.5 U | 4.6 U | 2.6 U | 3.1 U | 15.4 [] |
| Beryllium 5 | 0.60 U | 0.60 U | 0.56 U | 0.56 U | 0.56 U | 0.56 U | 0.56 U |
| Cadmium 5 | 1.4 U | 1.4 U | 1.4 U | 1.4 U | 1.4 U | 1.4 U | 1.4 U |
| Calcium 5000 | 8840 | 5030 | 8160 | 5360 | 3010 [] | 6060 | 10000 |
| Chromium 10 | 1.7 U | 1.7 U | 1.7 U | 1.7 U | 1.7 U | 1.7 U | 1.9 [] |
| Cobalt 50 | 15.8 U | 2.4 U | 3.5 [] | 2.4 UJ | 2.4 UJ | 2.4 UJ | 2.4 UJ |
| Copper 25 | 28.6 | 9.2 U | 3.9 U | 5.4 U | 6.7 U | 8.7 U | 17.4 U |
| Iron 100 | 175 | 300 | 111 | 11.0 U | 152 U | 28.8 U | 222 U |
| Lead 3 | 1.8 [] | 1.8 U | 3.2 | 4.6 U | 10.0 U | 5.4 U | 4.3 U |
| Magnesium 5000 | 1890 [] | 2080 [] | 3300 [] | 1350 [] | 823 [] | 3090 [] | 2650 [] |
| Manganese 15 | 22.2 | 231 | 84.5 | 144 | 120 | 3.2 [] | 51.4 |
| Mercury 0.2 | 0.20 U | 0.20 U | 0.20 U | 0.20 U | 0.20 U | 0.20 U | 0.20 U |
| Nickel 40 | 6.9 U | 6.9 U | 8.8 U | 11.3 U | 8.5 U | 8.0 U | 10.3 U |
| Potassium 5000 | 2350 [] | 1390 U | 1710 U | 1240 U | 890 U | 1600 [] | 4560 [] |
| Selenium 5 | 2.9 U | 2.9 U | 2.9 U | 2.9 U | 2.9 U | 2.9 U | 2.9 UJ |
| Silver 10 | 9.1 UJ | 9.1 UJ | 9.1 UJ | 9.1 UJ | 9.1 UJ | 9.1 UJ | 9.1 UJ |
| Sodium 5000 | 43800 | 4680 [] | 6560 | 4750 [] | 3500 [] | 13300 | 27800 |
| Thallium 10 | 1.6 U | 1.6 U | 1.6 U | 1.6 U | 1.6 U | 1.6 U | 1.6 U |
| Vanadium 50 | 1.2 U | 1.2 U | 1.4 [] | 1.2 U | 1.2 U | 1.2 U | 1.2 U |
| Zinc 20 | 13.4 U | 13.3 U | 10.4 U | 3.8 [] | 8.8 [] | 3.8 [] | 14.9 [] |
| Cyanide 10 | 10.0 U | 10.0 U | 10.0 U | 10.0 U | 10.0 U | 10.0 U | 10.0 U |
| Associated Method Blank: | BNPMW306W | BNPMW306W | BR11107W | BN11064W | BN11064W | BN11064W | BN11064W |
| Associated Equipment Blank: | BNQSXX3XXX02XX | BNQSXX3XXX02XX | BNQSXX4XXX02XX | BNQSXX1XXX02XX | BNQSXX1XXX02XX | BNQSXX1XXX02XX | BNQSXX1XXX02XX |
| Associated Field Blank: | - | - | - | - | - | - | - |

Table 2
Validation / Summary Table
(Method Blank Evaluation)

| | | | | | | | |
|---|---|---|---|---|---|---|---|
| | SAMPLE LOCATION: | 01MW207AXX02XX | 01MW207BXX02XX | 01MW229AXX02XX | 01MW229BXX02XX | EPMW313XXX02XX | EPMW319XXX02XX |
| | LAB NUMBER: | 01A | 02A | 05A | 06A | 07A | 08A |
| | DATE SAMPLED: | 11/13/90 | 11/13/90 | 11/13/90 | 11/13/90 | 11/13/90 | 11/13/90 |
| | DATE ANALYZED: | 11/26/90 | 11/26/90 | 11/26/90 | 11/26/90 | 11/26/90 | 11/26/90 |
| ANALYTE | DL | | | | | | |
| Bicarbonate | 1.0 | 71 | 14 | 32 | 12 | 80 | 25 |
| Carbonate | 1.0 | 1.0 U | 1.0 U | 1.0 U | 1.0 U | 1.0 U | 1.0 U |
| Total Alkalinity | 1.0 | 71 | 14 | 32 | 12 | 80 | 25 |
| Dilution Factor: | | 1.00 | 1.00 | 1.00 | 1.00 | 1.00 | 1.00 |
| Associated Method Blank: | | BN10A-ALK | BN10A-ALK | BN10A-ALK | BN10A-ALK | BN10A-ALK | BN10A-ALK |
| Associated Equipment Blank: | | BNQSXX4XXX02XX | BNQSXX4XXX02XX | BNQSXX4XXX02XX | BNQSXX4XXX02XX | BNQSXX4XXX02XX | BNQSXX4XXX02XX |

Table 2
Validation / Summary Table
(Method Blank Evaluation)

| SAMPLE LOCATION: | | 01MW209XXX02XX | EPMW310XXX02XX | EPMW311XXX02XX | EPMW311XXX02XD | EPMW312XXX02XX |
|---|---|---|---|---|---|---|
| LAB NUMBER: | | 01A | 02A | 03A | 04A | 05A |
| DATE SAMPLED: | | 11/08/90 | 11/08/90 | 11/09/90 | 11/09/90 | 11/09/90 |
| DATE ANALYZED: | | 11/20/90 | 11/20/90 | 11/20/90 | 11/20/90 | 11/20/90 |
| ANALYTE | DL | | | | | |
| Bicarbonate | 1.0 | 7.6 | 19 | 50 | 50 | 92 |
| Carbonate | 1.0 | 1.0 U | 1.0 U | 1.0 U | 1.0 U | 1.0 U |
| Total Alkalinity | 1.0 | 7.6 | 19 | 50 | 50 | 92 |
| Dilution Factor: | | 1 | 1 | 1 | 1 | 1 |
| Associated Method Blank: | | BN06A-ALK | BN06A-ALK | BN06A-ALK | BN06A-ALK | BN06A-ALK |

Table 2
Validation / Summary Table
(Method Blank Evaluation)

| SAMPLE LOCATION: | | 01MW230AXX02XX | 01MW230BXX02XX | 01MW234XXX02XX | EPMW314AXX02XX | EPMW314BXX02XX | EPMW315AXX02XX | EPMW315BXX02XX | EPMW316AXX02XX |
|---|---|---|---|---|---|---|---|---|---|
| LAB NUMBER: | | 01A | 02A | 03A | 04A | 05A | 06A | 07A | 08A |
| DATE SAMPLED: | | 11/08/90 | 11/08/90 | 11/08/90 | 11/08/90 | 11/08/90 | 11/08/90 | 11/08/90 | 11/08/90 |
| DATE ANALYZED: | | 11/20/90 | 11/20/90 | 11/20/90 | 11/20/90 | 11/20/90 | 11/20/90 | 11/20/90 | 11/20/90 |
| ANALYTE | DL | | | | | | | | |
| Bicarbonate | 1.0 | 28 | 53 | 150 | 43 | 70 | 52 | 26 | 86 |
| Carbonate | 1.0 | 1.0 U | 1.0 U | 1.0 U | 1.0 U | 1.0 U | 1.0 U | 1.0 U | 1.0 U |
| Total Alkalinity | 1.0 | 28 | 53 | 150 | 43 | 70 | 52 | 26 | 86 |
| Dilution Factor: | | 1 | 1 | 1 | 1 | 1 | 1 | 1 | 1 |
| Associated Method Blank: | | BN14A-ALK | BN14A-ALK | BN14A-ALK | BN14A-ALK | BN14A-ALK | BN14A-ALK | BN14A-ALK | BN14A-ALK |
| Associated Equipment Blank: | | BNQSXX3XXX02XX | BNQSXX3XXX02XX | BNQSXX3XXX02XX | BNQSXX3XXX02XX | BNQSXX3XXX02XX | BNQSXX3XXX02XX | BNQSXX3XXX02XX | BNQSXX3XXX02XX |

Table 2
Validation / Summary Table
(Method Blank Evaluation)

| SAMPLE LOCATION: | | EPMW316BXX02XX | EPMW317AXX02XX | EPMW317BXX02XX | EPMW318XXX02XX |
|---|---|---|---|---|---|
| LAB NUMBER: | | 09A | 10A | 11A | 12A |
| DATE SAMPLED: | | 11/08/90 | 11/07/90 | 11/07/90 | 11/08/90 |
| DATE ANALYZED: | | 11/20/90 | 11/20/90 | 11/20/90 | 11/20/90 |
| ANALYTE | DL | | | | |
| Bicarbonate | 1.0 | 33 | 93 | 97 | 23 |
| Carbonate | 1.0 | 1.0 U | 1.0 U | 1.0 U | 1.0 U |
| Total Alkalinity | 1.0 | 33 | 93 | 97 | 23 |
| Dilution Factor: | | 1 | 1 | 1 | 1 |
| Associated Method Blank: | | BN14A-ALK | BN14A-ALK | BN14A-ALK | BN14A-ALK |
| Associated Equipment Blank: | | BNQSXX3XXX02XX | BNQSXX3XXX02XX | BNQSXX3XXX02XX | BNQSXX3XXX02XX |

Table 2
Validation / Summary Table
(Method Blank Evaluation)

| SAMPLE LOCATION: | | 13MW1303XX02XX | EPMW306XXX02XX | EPMW306XX02XD | 13MWGZA3XX02XX | EPMW307XXX02XX | EPMW308XXX02XX | EPMW309AXX02XX | EPMW309BXX02XX |
|---|---|---|---|---|---|---|---|---|---|
| LAB NUMBER: | | 01A | 02A | 03A | 06A | 07A | 08A | 09A | 10A |
| DATE SAMPLED: | | 11/07/90 | 11/07/90 | 11/07/90 | 11/07/90 | 11/07/90 | 11/07/90 | 11/07/90 | 11/07/90 |
| ANALYTE | DL | | | | | | | | |
| Bicarbonate | 1.0 | 34 | 18 | 18 | 7.7 | 23 | 130 | 110 | 100 |
| Carbonate | 1.0 | 1.0 U | 1.0 U | 1.0 U | 1.0 U | 1.0 U | 1.0 U | 1.0 U | 1.0 U |
| Total Alkalinity | 1.0 | 34 | 18 | 18 | 7.7 | 23 | 130 | 110 | 100 |
| Dilution Factor: | | 1.00 | 1.00 | 1.00 | 1.00 | 1.00 | 1.00 | 1.00 | 1.00 |
| Associated Method Blank: | | BN17A-ALK | BN17A-ALK | BN17A-ALK | BN17A-ALK | BN17A-ALK | BN17A-ALK | BN17A-ALK | BN17A-ALK |
| Associated Equipment Blank: | | BNQSXX2XXX02XX | BNQSXX2XXX02XX | BNQSXX2XXX02XX | BNQSXX2XXX02XX | BNQSXX2XXX02XX | BNQSXX2XXX02XX | BNQSXX2XXX02XX | BNQSXX2XXX02XX |

M-40

Table 2
Validation / Summary Table
(Method Blank Evaluation)

| | | | | |
|---|---|---|---|---|
| | SAMPLE LOCATION: | 06MW322XXX02XX | 06MW323XXX02XX | 11MW1103XX02XX |
| | LAB NUMBER: | 11A | 12A | 13A |
| | DATE SAMPLED: | 11/06/90 | 11/06/90 | 11/06/90 |
| | DATE ANALYZED: | 11/13/90 | 11/13/90 | 11/13/90 |
| ANALYTE | DL | | | |
| Bicarbonate | 1.0 | 22 | 77 | 20 |
| Carbonate | 1.0 | 1.0 U | 1.0 U | 1.0 U |
| Total Alkalinity | 1.0 | 22 | 77 | 20 |
| | Dilution Factor: | 1.00 | 1.00 | 1.00 |
| | Associated Method Blank: | BN15A-ALK | BN15A-ALK | BN15A-ALK |
| | Associated Equipment Blank: | BNQSXX1XXX02XX | BNQSXX1XXX02XX | BNQSXX1XXX02XX |

Table 2
Validation / Summary Table
(Method Blank Evaluation)

| | | | | | | | | | |
|---|---|---|---|---|---|---|---|---|---|
| | SAMPLE LOCATION: | EPMW301XXX02XX | EPMW301XXX02XD | EPMW302XXX02XX | EPMW303XXX02XX | EPMW304XXX02XX | EPMW305XXX02XX | 06MW320XXX02XX | 06MW321XXX02XX |
| | LAB NUMBER: | 01A | 02A | 05A | 06A | 07A | 08A | 09A | 10A |
| | DATE SAMPLED: | 11/05/90 | 11/05/90 | 11/06/90 | 11/06/90 | 11/06/90 | 11/06/90 | 11/06/90 | 11/06/90 |
| | DATE ANALYZED: | 11/13/90 | 11/13/90 | 11/13/90 | 11/13/90 | 11/13/90 | 11/13/90 | 11/13/90 | 11/13/90 |
| ANALYTE | DL | | | | | | | | |
| Bicarbonate | 1.0 | 8.2 | 7.0 | 32 | 100 | 17 | 92 | 20 | 11 |
| Carbonate | 1.0 | 1.0 U | 1.0 U | 1.0 U | 1.0 U | 1.0 U | 1.0 U | 1.0 U | 1.0 U |
| Total Alkalinity | 1.0 | 8.2 | 7.0 | 32 | 100 | 17 | 92 | 20 | 11 |
| Dilution Factor: | | 1.00 | 1.00 | 1.00 | 1.00 | 1.00 | 1.00 | 1.00 | 1.00 |
| Associated Method Blank: | | BN15A-ALK | BN15A-ALK | BN15A-ALK | BN15A-ALK | BN15A-ALK | BN15A-ALK | BN15A-ALK | BN15A-ALK |
| Associated Equipment Blank: | | BNQSXX1XXX02XX | BNQSXX1XXX02XX | BNQSXX1XXX02XX | BNQSXX1XXX02XX | BNQSXX1XXX02XX | BNQSXX1XXX02XX | BNQSXX1XXX02XX | BNQSXX1XXX02XX |

Table 2
Validation / Summary Table
(Method Blank Evaluation)

SAMPLE LOCATION: 08MW811XXX02XX
LAB NUMBER: 01A
DATE SAMPLED: 11/12/90
DATE ANALYZED: 11/20/90

| ANALYTE | DL | |
|---|---|---|
| Bicarbonate | 1.0 | 280 |
| Carbonate | 1.0 | 1.0 U |
| Total Alkalinity | 1.0 | 280 |

Dilution Factor: 1

Associated Method Blank: BN02A-ALK

Table 2
Validation / Summary Table
(Method Blank Evaluation)

| | | | | | | |
|---|---|---|---|---|---|---|
| | SAMPLE LOCATION: | 09MW904XXX02XX | 09MW906XXX02XX | 09MW907XXX02XX | 01MW224XXX02XX | 01MW224XXX02XD |
| | LAB NUMBER: | 11A | 12A | 13A | 14A | 15A |
| | DATE SAMPLED: | 11/07/90 | 11/07/90 | 11/07/90 | 11/07/90 | 11/07/90 |
| ANALYTE | DL | | | | | |
| Bicarbonate | 1.0 | 43 | 74 | 100 | 8.7 | 8.3 |
| Carbonate | 1.0 | 1.0 U | 1.0 U | 1.0 U | 1.0 U | 1.0 U |
| Total Alkalinity | 1.0 | 43 | 74 | 100 | 8.7 | 8.3 |
| Dilution Factor: | | 1.00 | 1.00 | 1.00 | 1.00 | 1.00 |
| Associated Method Blank: | | BN17A-ALK | BN17A-ALK | BN17A-ALK | BN17A-ALK | BN17A-ALK |
| Associated Equipment Blank: | | BNQSXX2XXX02XX | BNQSXX2XXX02XX | BNQSXX2XXX02XX | BNQSXX2XXX02XX | BNQSXX2XXX02XX |

Table 2
Validation / Summary Table
(Method Blank Evaluation)

| SAMPLE LOCATION: | | 01MW207AXX02XX | 01MW207BXX02XX | 01MW229AXX02XX | 01MW229BXX02XX | EPMW313XXX02XX | EPMW319XXX02XX |
|---|---|---|---|---|---|---|---|
| LAB NUMBER: | | 01 | 02 | 05 | 06 | 07 | 08 |
| DATE SAMPLED: | | 11/13/90 | 11/13/90 | 11/13/90 | 11/13/90 | 11/13/90 | 11/13/90 |
| ANALYTE | DL | | | | | | |
| Chloride | 1.0 | 17 | 3.1 | 8.9 | 8.7 | 21 | 12 |
| Sulfate | 1.0 | 1.4 | 5.9 | 4.3 | 3.5 | 5.1 | 4.0 |
| Associated Method Blank: | | BN10-CLS04 | BN10-CLS04 | BN10-CLS04 | BN10-CLS04 | BN10-CLS04 | BN10-CLS04 |
| Associated Equipment Blank: | | BNQSXX4XXX02XX | BNQSXX4XXX02XX | BNQSXX4XXX02XX | BNQSXX4XXX02XX | BNQSXX4XXX02XX | BNQSXX4XXX02XX |

Table 2
Validation / Summary Table
(Method Blank Evaluation)

| SAMPLE LOCATION: | | 01MW230AXX02XX | 01MW230BXX02XX | 01MW234XXX02XX | EPMW314AXX02XX | EPMW314BXX02XX | EPMW315AXX02XX | EPMW315BXX02XX | EPMW316AXX02XX |
|---|---|---|---|---|---|---|---|---|---|
| LAB NUMBER: | | 01 | 02 | 03 | 04 | 05 | 06 | 07 | 08 |
| DATE SAMPLED: | | 11/08/90 | 11/08/90 | 11/08/90 | 11/08/90 | 11/08/90 | 11/08/90 | 11/08/90 | 11/08/90 |
| ANALYTE | DL | | | | | | | | |
| Chloride | 1.0 | 8.3 | 6.4 | 8.5 | 16 | 5.2 | 14 | 5.6 | 6.2 |
| Sulfate | 1.0 | 4.0 | 1.0 U | 1.0 U | 2.7 | 1.0 U | 1.0 U | 5.1 | 9.6 |
| Associated Method Blank: | | BN14-CLS04 | BN14-CLS04 | BN14-CLS04 | BN14-CLS04 | BN14-CLS04 | BN14-CLS04 | BN14-CLS04 | BN14-CLS04 |
| Associated Equipment Blank: | | BNQSXX3XXX02XX | BNQSXX3XXX02XX | BNQSXX3XXX02XX | BNQSXX3XXX02XX | BNQSXX3XXX02XX | BNQSXX3XXX02XX | BNQSXX3XXX02XX | BNQSXX3XXX02XX |

Table 2
Validation / Summary Table
(Method Blank Evaluation)

| SAMPLE LOCATION: | | 09MW904XXX02XX | 09MW906XXX02XX | 09MW907XXX02XX | 01MW224XXX02XX | 01MW224XXX02XD |
|---|---|---|---|---|---|---|
| LAB NUMBER: | | 11 | 12 | 13 | 14 | 15 |
| DATE SAMPLED: | | 11/07/90 | 11/07/90 | 11/07/90 | 11/07/90 | 11/07/90 |
| ANALYTE | DL | | | | | |
| Chloride | 1.0 | 7.3 | 29 | 24 | 10 | 9.8 |
| Sulfate | 1.0 | 4.9 | 8.8 | 6.2 | 9.1 | 9.1 |
| Associated Method Blank: | | BN17-CLS04 | BN17-CLS04 | BN17-CLS04 | BN17-CLS04 | BN17-CLS04 |
| Associated Equipment Blank: | | BNQSXX2XXX02XX | BNQSXX2XXX02XX | BNQSXX2XXX02XX | BNQSXX2XXX02XX | BNQSXX2XXX02XX |

Table 2
Validation / Summary Table
(Method Blank Evaluation)

| SAMPLE LOCATION: | | 13MW1303XX02XX | EPMW306XXX02XX | EPMW306XXX02XD | 13MWGZA3XX02XX | EPMW307XXX02XX | EPMW308XXX02XX | EPMW309AXX02XX | EPMW309BXX02XX |
|---|---|---|---|---|---|---|---|---|---|
| LAB NUMBER: | | 01 | 02 | 03 | 06 | 07 | 08 | 09 | 10 |
| DATE SAMPLED: | | 11/07/90 | 11/07/90 | 11/07/90 | 11/07/90 | 11/07/90 | 11/07/90 | 11/07/90 | 11/07/90 |
| ANALYTE | DL | | | | | | | | |
| Chloride | 1.0 | 20 | 10 | 10 | 10 | 8.3 | 96 | 23 | 19 |
| Sulfate | 1.0 | 23 | 5.9 | 5.9 | 13 | 4.6 | 16 | 7.5 | 9.1 |
| Associated Method Blank: | | BN17-CLS04 | BN17-CLS04 | BN17-CLS04 | BN17-CLS04 | BN17-CLS04 | BN17-CLS04 | BN17-CLS04 | BN17-CLS04 |
| Associated Equipment Blank: | | BNQSXX2XXX02XX | BNQSXX2XXX02XX | BNQSXX2XXX02XX | BNQSXX2XXX02XX | BNQSXX2XXX02XX | BNQSXX2XXX02XX | BNQSXX2XXX02XX | BNQSXX2XXX02XX |

Table 2
Validation / Summary Table
(Method Blank Evaluation)

| SAMPLE LOCATION: | | 01MW209XXX02XX | EPMW310XXX02XX | EPMW311XXX02XX | EPMW311XXX02XD | EPMW312XXX02XX |
|---|---|---|---|---|---|---|
| LAB NUMBER: | | 01 | 02 | 03 | 04 | 05 |
| DATE SAMPLED: | | 11/08/90 | 11/08/90 | 11/09/90 | 11/09/90 | 11/09/90 |
| ANALYTE | DL | | | | | |
| Chloride | 1.0 | 6.2 | 8.9 | 9.1 | 9.1 | 41 |
| Sulfate | 1.0 | 5.6 | 3.4 | 4.2 | 3.8 | 9.9 |
| Associated Method Blank: | | BN06-CLS04 | BN06-CLS04 | BN06-CLS04 | BN06-CLS04 | BN06-CLS04 |

Table 2
Validation / Summary Table
(Method Blank Evaluation)

SAMPLE LOCATION: 08MW811XXX02XX
LAB NUMBER: 01
DATE SAMPLED: 11/12/90

| ANALYTE | DL | |
|---|---|---|
| Chloride | 1.0 | 56 |
| Sulfate | 1.0 | 1.0 U |

Associated Method Blank: BN02-CLS04

M-50

Table 2
Validation / Summary Table
(Method Blank Evaluation)

| SAMPLE LOCATION: | | EPMW301XXX02XX | EPMW301XXX02XD | EPMW302XXX02XX | EPMW303XXX02XX | EPMW304XXX02XX | EPMW305XXX02XX | 06MW320XXX02XX | 06MW321XXX02XX |
|---|---|---|---|---|---|---|---|---|---|
| LAB NUMBER: | | 01 | 02 | 05 | 06 | 07 | 08 | 09 | 10 |
| DATE SAMPLED: | | 11/05/90 | 11/05/90 | 11/06/90 | 11/06/90 | 11/06/90 | 11/06/90 | 11/06/90 | 11/06/90 |
| ANALYTE | DL | | | | | | | | |
| Chloride | 1.0 | 4.0 | 4.0 | 6.0 | 6.2 | 5.8 | 8.7 | 4.6 | 7.3 |
| Sulfate | 1.0 | 2.3 J | 1.0 UJ | 1.6 | 1.0 | 1.6 | 1.0 U | 4.6 | 4.0 |
| Associated Method Blank: | | BN15-CLS04 | BN15-CLS04 | BN15-CLS04 | BN15-CLS04 | BN15-CLS04 | BN15-CLS04 | BN15-CLS04 | BN15-CLS04 |
| Associated Equipment Blank: | | BNQSXX1XXX02XX | BNQSXX1XXX02XX | BNQSXX1XXX02XX | BNQSXX1XXX02XX | BNQSXX1XXX02XX | BNQSXX1XXX02XX | BNQSXX1XXX02XX | BNQSXX1XXX02XX |

Table 2
Validation / Summary Table
(Method Blank Evaluation)

| SAMPLE LOCATION: | | EPMW316BXX02XX | EPMW317AXX02XX | EPMW317BXX02XX | EPMW318XXX02XX |
|---|---|---|---|---|---|
| LAB NUMBER: | | 09 | 10 | 11 | 12 |
| DATE SAMPLED: | | 11/08/90 | 11/07/90 | 11/07/90 | 11/08/90 |
| ANALYTE | DL | | | | |
| Chloride | 1.0 | 4.6 | 16 | 13 | 5.2 |
| Sulfate | 1.0 | 7.4 | 18 | 18 | 4.8 |

| | | | | |
|---|---|---|---|---|
| Associated Method Blank: | BN14-CLS04 | BN14-CLS04 | BN14-CLS04 | BN14-CLS04 |
| Associated Equipment Blank: | BNQSXX3XXX02XX | BNQSXX3XXX02XX | BNQSXX3XXX02XX | BNQSXX3XXX02XX |

Table 2
Validation / Summary Table
(Method Blank Evaluation)

| | | | | |
|---|---|---|---|---|
| | SAMPLE LOCATION: | 06MW322XXX02XX | 06MW323XXX02XX | 11MW1103XX02XX |
| | LAB NUMBER: | 11 | 12 | 13 |
| | DATE SAMPLED: | 11/06/90 | 11/06/90 | 11/06/90 |
| ANALYTE | DL | | | |
| Chloride | 1.0 | 20 | 12 | 6.0 |
| Sulfate | 1.0 | 6.9 | 16 | 1.0 U |
| Associated Method Blank: | | BN15-CLS04 | BN15-CLS04 | BN15-CLS04 |
| Associated Equipment Blank: | | BNQSXX1XXX02XX | BNQSXX1XXX02XX | BNQSXX1XXX02XX |

# SOIL DATA

PROJECT: Naval Air Station Brunswick - Round 5 Volatile Organic Soil Analysis (ug/kg) 03/14/91

Table 2
Validation / Summary Table

| SAMPLE LOCATION: | 09PS903X0101XD | 09PS903X0101XX | 09PS903X0201XX | 09PS903X0601XX | 09PS904X0101XD | 09PS904X0101XX | 09PS904X0301XX | 09PS904X0701XX |
|---|---|---|---|---|---|---|---|---|
| LAB NUMBER: | 370483 | 370454 | 370481 | 370455 | 370475 | 370477 | 370479 | 370472 |
| DATE SAMPLED: | 09/18/90 | 09/18/90 | 09/18/90 | 09/18/90 | 09/18/90 | 09/18/90 | 09/18/90 | 09/18/90 |
| DATE ANALYZED: | 09/26/90 | 09/25/90 | 09/26/90 | 09/26/90 | 09/26/90 | 09/26/90 | 09/26/90 | 09/26/90 |
| ANALYTE | CRQL | | | | | | | |
| Chloromethane | 10 | 11 U | 11 U | 10 U | 11 U | 11 U | 11 U | 10 U | 11 U |
| Bromomethane | 10 | 11 U | 11 U | 10 U | 11 U | 11 U | 11 U | 10 U | 11 U |
| Vinyl Chloride | 10 | 11 U | 11 U | 10 U | 11 U | 11 U | 11 U | 10 U | 11 U |
| Chloroethane | 10 | 11 U | 11 U | 10 U | 11 U | 11 U | 11 U | 10 U | 11 U |
| Methylene Chloride | 5 | 19 UJ | 35 U | 10 U | 11 U | 23 U | 18 U | 11 U | 14 U |
| Acetone | 10 | 24 U | 20 U | 14 U | 21 U | 13 U | 13 U | 21 U | 13 U |
| Carbon Disulfide | 5 | 5 U | 5 U | 5 U | 5 U | 6 U | 6 U | 5 U | 5 U |
| 1,1-Dichloroethene | 5 | 5 U | 5 U | 5 U | 5 U | 6 U | 6 U | 5 U | 5 U |
| 1,1-Dichloroethane | 5 | 5 U | 5 U | 5 U | 5 U | 6 U | 6 U | 5 U | 5 U |
| 1,2-Dichloroethene (total) | 5 | 5 U | 5 U | 5 U | 5 U | 6 U | 6 U | 5 U | 5 U |
| Chloroform | 5 | 5 U | 5 U | 5 U | 5 U | 6 U | 6 U | 5 U | 5 U |
| 1,2-Dichloroethane | 5 | 5 U | 5 U | 5 U | 5 U | 6 U | 6 U | 5 U | 5 U |
| 2-Butanone | 10 | 11 U | 11 U | 10 U | 11 U | 11 U | 11 U | 10 U | 11 U |
| 1,1,1-Trichloroethane | 5 | 5 U | 5 U | 5 U | 5 U | 6 U | 6 U | 5 U | 5 U |
| Carbon Tetrachloride | 5 | 5 U | 5 U | 5 U | 5 U | 6 U | 6 U | 5 U | 5 U |
| Vinyl Acetate | 10 | 11 U | 11 U | 10 U | 11 U | 11 U | 11 U | 10 U | 11 U |
| Bromodichloromethane | 5 | 5 U | 5 U | 5 U | 5 U | 6 U | 6 U | 5 U | 5 U |
| 1,2-Dichloropropane | 5 | 5 U | 5 U | 5 U | 5 U | 6 U | 6 U | 5 U | 5 U |
| cis-1,3-Dichloropropene | 5 | 5 U | 5 U | 5 U | 5 U | 6 U | 6 U | 5 U | 5 U |
| Trichloroethene | 5 | 5 U | 5 U | 5 U | 5 U | 6 U | 6 U | 5 U | 5 U |
| Dibromochloromethane | 5 | 5 U | 5 U | 5 U | 5 U | 6 U | 6 U | 5 U | 5 U |
| 1,1,2-Trichloroethane | 5 | 5 U | 5 U | 5 U | 5 U | 6 U | 6 U | 5 U | 5 U |
| Benzene | 5 | 5 U | 5 U | 5 U | 5 U | 6 U | 6 U | 5 U | 5 U |
| trans-1,3-Dichloropropene | 5 | 5 U | 5 U | 5 U | 5 U | 6 U | 6 U | 5 U | 5 U |
| Bromoform | 5 | 5 U | 5 U | 5 U | 5 U | 6 U | 6 U | 5 U | 5 U |
| 4-Methyl-2-Pentanone | 10 | 11 U | 11 U | 10 U | 11 U | 11 U | 11 U | 10 U | 11 U |
| 2-Hexanone | 10 | 11 U | 11 U | 10 U | 11 U | 11 U | 11 U | 10 U | 11 U |
| Tetrachloroethene | 5 | 5 U | 5 U | 5 U | 5 U | 6 U | 6 U | 5 U | 5 U |
| 1,1,2,2-Tetrachloroethane | 5 | 5 U | 5 U | 5 U | 5 U | 6 U | 6 U | 5 U | 5 U |
| Toluene | 5 | 5 U | 5 U | 5 U | 5 U | 6 U | 6 U | 5 U | 5 U |
| Chlorobenzene | 5 | 5 U | 5 U | 5 U | 5 U | 6 U | 6 U | 5 U | 5 U |
| Ethylbenzene | 5 | 5 U | 5 U | 5 U | 5 U | 6 U | 6 U | 5 U | 5 U |
| Styrene | 5 | 5 U | 5 U | 5 U | 5 U | 6 U | 6 U | 5 U | 5 U |
| Total Xylenes | 5 | 5 U | 5 U | 5 U | 5 U | 6 U | 6 U | 5 U | 5 U |
| Dilution Factor: | | 1.0 | 1.0 | 1.0 | 1.0 | 1.0 | 1.0 | 1.0 | 1.0 |
| Percent Solids: | | 94 | 94 | 97 | 94 | 88 | 89 | 96 | 92 |
| Associated Method Blank: | | GH070852A12 | GH070847C12 | GH070851B12 | GH070851B12 | GH070851B12 | GH070851B12 | GH070851B12 | GH070851B12 |
| Associated Equipment Blank: | | - | - | - | - | - | - | - | - |
| Associated Field Blank: | | - | - | - | - | - | - | - | - |
| Associated Trip Blank: | | - | - | - | - | - | - | - | - |

Table 2
Validation / Summary Table

| SAMPLE LOCATION: | 09PS905X0101XD | 09PS905X0101XX | 09PS905X0301XX | 09PS905X0601XX | 09PS906X0101XX | 09PS906X0301XX | 09PS906X0601XX | 09PS907X0201XX |
|---|---|---|---|---|---|---|---|---|
| LAB NUMBER: | 370445 | 370442 | 370444 | 370443 | 370451 | 370441 | 370452 | 370450 |
| DATE SAMPLED: | 09/18/90 | 09/18/90 | 09/18/90 | 09/18/90 | 09/19/90 | 09/19/90 | 09/19/90 | 09/19/90 |
| DATE ANALYZED: | 09/25/90 | 09/24/90 | 09/25/90 | 09/24/90 | 09/26/90 | 09/24/90 | 09/26/90 | 09/26/90 |
| ANALYTE | CRQL | | | | | | | |
| Chloromethane | 10 | 11 U | 11 U | 10 U | 11 U | 11 U | 10 U | 11 U | 11 U |
| Bromomethane | 10 | 11 U | 11 U | 10 U | 11 U | 11 U | 10 U | 11 U | 11 U |
| Vinyl Chloride | 10 | 11 U | 11 U | 10 U | 11 U | 11 U | 10 U | 11 U | 11 U |
| Chloroethane | 10 | 11 U | 11 U | 10 U | 11 U | 11 U | 10 U | 11 U | 11 U |
| Methylene Chloride | 5 | 18 U | 26 U | 21 U | 55 U | 21 U | 53 U | 13 U | 20 U |
| Acetone | 10 | 18 UJ | 21 UJ | 21 UJ | 58 UJ | 14 U | 33 UJ | 14 U | 12 U |
| Carbon Disulfide | 5 | 5 U | 5 U | 5 U | 5 U | 5 U | 5 U | 5 U | 5 U |
| 1,1-Dichloroethene | 5 | 5 U | 5 U | 5 U | 5 U | 5 U | 5 U | 5 U | 5 U |
| 1,1-Dichloroethane | 5 | 5 U | 5 U | 5 U | 5 U | 5 U | 5 U | 5 U | 5 U |
| 1,2-Dichloroethene (total) | 5 | 5 U | 5 U | 5 U | 5 U | 5 U | 5 U | 5 U | 5 U |
| Chloroform | 5 | 5 U | 5 U | 5 U | 5 U | 5 U | 5 U | 5 U | 5 U |
| 1,2-Dichloroethane | 5 | 5 U | 5 U | 5 U | 5 U | 5 U | 5 U | 5 U | 5 U |
| 2-Butanone | 10 | 11 U | 11 U | 10 U | 11 U | 11 U | 10 U | 11 U | 11 U |
| 1,1,1-Trichloroethane | 5 | 5 U | 5 U | 5 U | 5 U | 5 U | 5 U | 5 U | 5 U |
| Carbon Tetrachloride | 5 | 5 U | 5 U | 5 U | 5 U | 5 U | 5 U | 5 U | 5 U |
| Vinyl Acetate | 10 | 11 U | 11 U | 10 U | 11 U | 11 U | 10 U | 11 U | 11 U |
| Bromodichloromethane | 5 | 5 U | 5 U | 5 U | 5 U | 5 U | 5 U | 5 U | 5 U |
| 1,2-Dichloropropane | 5 | 5 U | 5 U | 5 U | 5 U | 5 U | 5 U | 5 U | 5 U |
| cis-1,3-Dichloropropene | 5 | 5 U | 5 U | 5 U | 5 U | 5 U | 5 U | 5 U | 5 U |
| Trichloroethene | 5 | 5 U | 5 U | 5 U | 5 U | 5 U | 5 U | 5 U | 5 U |
| Dibromochloromethane | 5 | 5 U | 5 U | 5 U | 5 U | 5 U | 5 U | 5 U | 5 U |
| 1,1,2-Trichloroethane | 5 | 5 U | 5 U | 5 U | 5 U | 5 U | 5 U | 5 U | 5 U |
| Benzene | 5 | 5 U | 5 U | 5 U | 5 U | 5 U | 5 U | 5 U | 5 U |
| trans-1,3-Dichloropropene | 5 | 5 U | 5 U | 5 U | 5 U | 5 U | 5 U | 5 U | 5 U |
| Bromoform | 5 | 5 U | 5 U | 5 U | 5 U | 5 U | 5 U | 5 U | 5 U |
| 4-Methyl-2-Pentanone | 10 | 11 U | 11 U | 10 U | 11 U | 11 U | 10 U | 11 U | 11 U |
| 2-Hexanone | 10 | 11 U | 11 U | 10 U | 11 U | 11 U | 10 U | 11 U | 11 U |
| Tetrachloroethene | 5 | 5 U | 5 U | 5 U | 5 U | 5 U | 5 U | 5 U | 5 U |
| 1,1,2,2-Tetrachloroethane | 5 | 5 U | 5 U | 5 U | 5 U | 5 U | 5 U | 5 U | 5 U |
| Toluene | 5 | 5 U | 5 U | 5 U | 5 U | 5 U | 5 U | 5 U | 5 U |
| Chlorobenzene | 5 | 5 U | 5 U | 5 U | 5 U | 5 U | 5 U | 5 U | 5 U |
| Ethylbenzene | 5 | 5 U | 5 U | 5 U | 5 U | 5 U | 5 U | 5 U | 5 U |
| Styrene | 5 | 5 U | 5 U | 5 U | 5 U | 5 U | 5 U | 5 U | 5 U |
| Total Xylenes | 5 | 5 U | 5 U | 5 U | 5 U | 5 U | 5 U | 5 U | 5 U |
| Dilution Factor: | | 1.0 | 1.0 | 1.0 | 1.0 | 1.0 | 1.0 | 1.0 | 1.0 |
| Percent Solids: | | 94 | 94 | 97 | 91 | 94 | 96 | 91 | 93 |
| Associated Method Blank: | | GH070846B12 | GH070846B12 | GH070846B12 | GH070846B12 | GH070851B12 | GH070846B12 | GH070851B12 | GH070851B12 |
| Associated Equipment Blank: | | - | - | - | - | - | - | - | - |
| Associated Field Blank: | | - | - | - | - | - | - | - | - |
| Associated Trip Blank: | | - | - | - | - | - | - | - | - |

PROJECT: Naval Air Station Brunswick - Round 5 | Volatile Organic Soil Analysis (ug/kg) | 03/14/91

Table 2
Validation / Summary Table

| SAMPLE LOCATION: | | 09PS907X0401XX | 09PS907X0701XX | 09PS908X0101XX | 09PS908X0301XX | 09PS908X0801XX | 09PS909X0101XX | 09PS909X0301XX | 09PS909X0601XX |
|---|---|---|---|---|---|---|---|---|---|
| LAB NUMBER: | | 370446 | 370448 | 370907 | 370922 | 370909 | 370447 | 370449 | 370453 |
| DATE SAMPLED: | | 09/19/90 | 09/19/90 | 09/19/90 | 09/19/90 | 09/19/90 | 09/19/90 | 09/19/90 | 09/19/90 |
| DATE ANALYZED: | | 09/25/90 | 09/25/90 | 10/01/90 | 10/01/90 | 10/01/90 | 09/25/90 | 09/26/90 | 09/26/90 |
| ANALYTE | CRQL | | | | | | | | |
| Chloromethane | 10 | 11 U | 13 U | 10 U | 10 U | 13 U | 11 U | 11 U | 13 U |
| Bromomethane | 10 | 11 U | 13 U | 10 U | 10 U | 13 U | 11 U | 11 U | 13 U |
| Vinyl Chloride | 10 | 11 U | 13 U | 10 U | 10 U | 13 U | 11 U | 11 U | 13 U |
| Chloroethane | 10 | 11 U | 13 U | 10 U | 10 U | 13 U | 11 U | 11 U | 13 U |
| Methylene Chloride | 5 | 23 U | 45 U | 11 U | 11 U | 17 U | 15 U | 19 U | 20 U |
| Acetone | 10 | 21 UJ | 23 U | 10 U | 10 U | 13 U | 16 UJ | 15 U | 22 U |
| Carbon Disulfide | 5 | 6 U | 6 U | 5 U | 5 U | 6 U | 5 U | 5 U | 6 U |
| 1,1-Dichloroethene | 5 | 6 U | 6 U | 5 U | 5 U | 6 U | 5 U | 5 U | 6 U |
| 1,1-Dichloroethane | 5 | 6 U | 6 U | 5 U | 5 U | 6 U | 5 U | 5 U | 6 U |
| 1,2-Dichloroethene (total) | 5 | 6 U | 6 U | 5 U | 5 U | 6 U | 5 U | 5 U | 6 U |
| Chloroform | 5 | 6 U | 6 U | 5 U | 5 U | 6 U | 5 U | 5 U | 6 U |
| 1,2-Dichloroethane | 5 | 6 U | 6 U | 5 U | 5 U | 6 U | 5 U | 5 U | 6 U |
| 2-Butanone | 10 | 11 U | 13 U | 10 U | 10 U | 13 U | 11 U | 11 U | 13 U |
| 1,1,1-Trichloroethane | 5 | 6 U | 6 U | 5 U | 5 U | 6 U | 5 U | 5 U | 6 U |
| Carbon Tetrachloride | 5 | 6 U | 6 U | 5 U | 5 U | 6 U | 5 U | 5 U | 6 U |
| Vinyl Acetate | 10 | 11 U | 13 U | 10 U | 10 U | 13 U | 11 U | 11 U | 13 U |
| Bromodichloromethane | 5 | 6 U | 6 U | 5 U | 5 U | 6 U | 5 U | 5 U | 6 U |
| 1,2-Dichloropropane | 5 | 6 U | 6 U | 5 U | 5 U | 6 U | 5 U | 5 U | 6 U |
| cis-1,3-Dichloropropene | 5 | 6 U | 6 U | 5 U | 5 U | 6 U | 5 U | 5 U | 6 U |
| Trichloroethene | 5 | 6 U | 6 U | 5 U | 5 U | 6 U | 5 U | 5 U | 6 U |
| Dibromochloromethane | 5 | 6 U | 6 U | 5 U | 5 U | 6 U | 5 U | 5 U | 6 U |
| 1,1,2-Trichloroethane | 5 | 6 U | 6 U | 5 U | 5 U | 6 U | 5 U | 5 U | 6 U |
| Benzene | 5 | 6 U | 6 U | 5 U | 5 U | 6 U | 5 U | 5 U | 6 U |
| trans-1,3-Dichloropropene | 5 | 6 U | 6 U | 5 U | 5 U | 6 U | 5 U | 5 U | 6 U |
| Bromoform | 5 | 6 U | 6 U | 5 U | 5 U | 6 U | 5 U | 5 U | 6 U |
| 4-Methyl-2-Pentanone | 10 | 11 U | 13 U | 10 U | 10 U | 13 U | 11 U | 11 U | 13 U |
| 2-Hexanone | 10 | 11 U | 13 U | 10 U | 10 U | 13 U | 11 U | 11 U | 13 U |
| Tetrachloroethene | 5 | 6 U | 6 U | 5 U | 5 U | 6 U | 5 U | 5 U | 6 U |
| 1,1,2,2-Tetrachloroethane | 5 | 6 U | 6 U | 5 U | 5 U | 6 U | 5 U | 5 U | 6 U |
| Toluene | 5 | 6 U | 6 U | 5 U | 5 U | 6 U | 5 U | 5 U | 6 U |
| Chlorobenzene | 5 | 6 U | 6 U | 5 U | 5 U | 6 U | 5 U | 5 U | 6 U |
| Ethylbenzene | 5 | 6 U | 6 U | 5 U | 5 U | 6 U | 5 U | 5 U | 6 U |
| Styrene | 5 | 6 U | 6 U | 5 U | 5 U | 6 U | 5 U | 5 U | 6 U |
| Total Xylenes | 5 | 6 U | 6 U | 5 U | 5 U | 6 U | 5 U | 5 U | 6 U |
| Dilution Factor: | | 1.0 | 1.0 | 1.0 | 1.0 | 1.0 | 1.0 | 1.0 | 1.0 |
| Percent Solids: | | 90 | 78 | 98 | 98 | 79 | 95 | 93 | 77 |
| Associated Method Blank: | | GH070846B12 | GH070851B12 | GH071413C13 | GH071413C13 | GH071413C13 | GH070846B12 | GH070851B12 | GH070851B12 |
| Associated Equipment Blank: | | - | - | - | - | - | - | - | - |
| Associated Field Blank: | | - | - | - | - | - | - | - | - |
| Associated Trip Blank: | | - | - | - | - | - | - | - | - |

Table 2
Validation / Summary Table

| SAMPLE LOCATION: | 09PS910X0201XX | 09PS910X0401XX | 09PS910X0701XX | 09PS911X0201XX | 09PS911X0401XX | 09PS911X0801XX |
|---|---|---|---|---|---|---|
| LAB NUMBER: | 370934 | 370913 | 370927 | 370932 | 370936 | 370938 |
| DATE SAMPLED: | 09/19/90 | 09/19/90 | 09/19/90 | 09/19/90 | 09/19/90 | 09/19/90 |
| DATE ANALYZED: | 10/01/90 | 10/01/90 | 10/01/90 | 10/01/90 | 10/01/90 | 10/01/90 |

| ANALYTE | CRQL | | | | | | |
|---|---|---|---|---|---|---|---|
| Chloromethane | 10 | 11 U | 11 U | 11 U | 11 U | 11 U | 11 U |
| Bromomethane | 10 | 11 U | 11 U | 11 U | 11 U | 11 U | 11 U |
| Vinyl Chloride | 10 | 11 U | 11 U | 11 U | 11 U | 11 U | 11 U |
| Chloroethane | 10 | 11 U | 11 U | 11 U | 11 U | 11 U | 11 U |
| Methylene Chloride | 5 | 34 U | 13 U | 13 U | 13 U | 23 U | 22 U |
| Acetone | 10 | 11 U | 11 U | 11 U | 11 U | 11 U | 11 U |
| Carbon Disulfide | 5 | 5 U | 5 U | 5 U | 5 U | 5 U | 6 U |
| 1,1-Dichloroethene | 5 | 5 U | 5 U | 5 U | 5 U | 5 U | 6 U |
| 1,1-Dichloroethane | 5 | 5 U | 5 U | 5 U | 5 U | 5 U | 6 U |
| 1,2-Dichloroethene (total) | 5 | 5 U | 5 U | 5 U | 5 U | 5 U | 6 U |
| Chloroform | 5 | 5 U | 5 U | 5 U | 5 U | 5 U | 6 U |
| 1,2-Dichloroethane | 5 | 5 U | 5 U | 5 U | 5 U | 5 U | 6 U |
| 2-Butanone | 10 | 11 U | 11 U | 11 U | 11 U | 11 U | 11 U |
| 1,1,1-Trichloroethane | 5 | 5 U | 5 U | 5 U | 5 U | 5 U | 6 U |
| Carbon Tetrachloride | 5 | 5 U | 5 U | 5 U | 5 U | 5 U | 6 U |
| Vinyl Acetate | 10 | 11 U | 11 U | 11 U | 11 U | 11 U | 11 U |
| Bromodichloromethane | 5 | 5 U | 5 U | 5 U | 5 U | 5 U | 6 U |
| 1,2-Dichloropropane | 5 | 5 U | 5 U | 5 U | 5 U | 5 U | 6 U |
| cis-1,3-Dichloropropene | 5 | 5 U | 5 U | 5 U | 5 U | 5 U | 6 U |
| Trichloroethene | 5 | 5 U | 5 U | 5 U | 5 U | 5 U | 6 U |
| Dibromochloromethane | 5 | 5 U | 5 U | 5 U | 5 U | 5 U | 6 U |
| 1,1,2-Trichloroethane | 5 | 5 U | 5 U | 5 U | 5 U | 5 U | 6 U |
| Benzene | 5 | 5 U | 5 U | 5 U | 5 U | 5 U | 6 U |
| trans-1,3-Dichloropropene | 5 | 5 U | 5 U | 5 U | 5 U | 5 U | 6 U |
| Bromoform | 5 | 5 U | 5 U | 5 U | 5 U | 5 U | 6 U |
| 4-Methyl-2-Pentanone | 10 | 11 U | 11 U | 11 U | 11 U | 11 U | 11 U |
| 2-Hexanone | 10 | 11 U | 11 U | 11 U | 11 U | 11 U | 11 U |
| Tetrachloroethene | 5 | 5 U | 5 U | 5 U | 5 U | 5 U | 6 U |
| 1,1,2,2-Tetrachloroethane | 5 | 5 U | 5 U | 5 U | 5 U | 5 U | 6 U |
| Toluene | 5 | 5 U | 5 U | 5 U | 5 U | 5 U | 6 U |
| Chlorobenzene | 5 | 5 U | 5 U | 5 U | 5 U | 5 U | 6 U |
| Ethylbenzene | 5 | 5 U | 5 U | 5 U | 5 U | 5 U | 6 U |
| Styrene | 5 | 5 U | 5 U | 5 U | 5 U | 5 U | 6 U |
| Total Xylenes | 5 | 5 U | 5 U | 5 U | 5 U | 5 U | 6 U |
| Dilution Factor: | | 1.0 | 1.0 | 1.0 | 1.0 | 1.0 | 1.0 |
| Percent Solids: | | 91 | 93 | 92 | 95 | 92 | 88 |
| Associated Method Blank: | | GH071413C13 | GH071413C13 | GH071413C13 | GH071413C13 | GH071413C13 | GH071413C13 |
| Associated Equipment Blank: | | - | - | - | - | - | - |
| Associated Field Blank: | | - | - | - | - | - | - |
| Associated Trip Blank: | | - | - | - | - | - | - |

Table 2
Validation / Summary Table

| SAMPLE LOCATION: | | 09PS903X0101XD | 09PS903X0101XX | 09PS903X0201XX | 09PS903X0601XX | 09PS904X0101XD | 09PS904X0101XX | 09PS904X0301XX | 09PS904X0701XX |
|---|---|---|---|---|---|---|---|---|---|
| LAB NUMBER: | | 370483 | 370454 | 370481 | 370455 | 370475 | 370477 | 370479 | 370472 |
| DATE SAMPLED: | | 09/18/90 | 09/18/90 | 09/18/90 | 09/18/90 | 09/18/90 | 09/18/90 | 09/18/90 | 09/18/90 |
| DATE EXTRACTED: | | 09/20/90 | 09/21/90 | 09/20/90 | 09/20/90 | 09/20/90 | 09/20/90 | 09/20/90 | 09/20/90 |
| DATE ANALYZED: | | 09/26/90 | 09/25/90 | 09/26/90 | 09/24/90 | 09/24/90 | 09/26/90 | 09/26/90 | 09/24/90 |
| ANALYTE | CRQL | | | | | | | | |
| 'henol | 330 | 350 U | 350 U | 340 U | 350 U | 370 U | 370 U | 340 U | 360 U |
| ›is(2-Chloroethyl)ether | 330 | 350 U | 350 U | 340 U | 350 U | 370 U | 370 U | 340 U | 360 U |
| ?-Chlorophenol | 330 | 350 U | 350 U | 340 U | 350 U | 370 U | 370 U | 340 U | 360 U |
| l,3-Dichlorobenzene | 330 | 350 U | 350 U | 340 U | 350 U | 370 U | 370 U | 340 U | 360 U |
| l,4-Dichlorobenzene | 330 | 350 U | 350 U | 340 U | 350 U | 370 U | 370 U | 340 U | 360 U |
| lenzyl Alcohol | 330 | 350 U | 350 U | 340 U | 350 U | 370 U | 370 U | 340 U | 360 U |
| l,2-Dichlorobenzene | 330 | 350 U | 350 U | 340 U | 350 U | 370 U | 370 U | 340 U | 360 U |
| ?-Methylphenol | 330 | 350 U | 350 U | 340 U | 350 U | 370 U | 370 U | 340 U | 360 U |
| ›is(2-Chloroisopropyl)ether | 330 | 350 U | 350 U | 340 U | 350 U | 370 U | 370 U | 340 U | 360 U |
| ;-Methylphenol | 330 | 350 U | 350 U | 340 U | 350 U | 370 U | 370 U | 340 U | 360 U |
| l-Nitroso-di-n-propylamine | 330 | 350 U | 350 U | 340 U | 350 U | 370 U | 370 U | 340 U | 360 U |
| lexachloroethane | 330 | 350 U | 350 U | 340 U | 350 U | 370 U | 370 U | 340 U | 360 U |
| litrobenzene | 330 | 350 U | 350 U | 340 U | 350 U | 370 U | 370 U | 340 U | 360 U |
| lsophorone | 330 | 350 U | 350 U | 340 U | 350 U | 370 U | 370 U | 340 U | 360 U |
| ?-Nitrophenol | 330 | 350 U | 350 U | 340 U | 350 U | 370 U | 370 U | 340 U | 360 U |
| ?,4-Dimethylphenol | 330 | 350 U | 350 U | 340 U | 350 U | 370 U | 370 U | 340 U | 360 U |
| lenzoic Acid | 1600 | 1700 UJ | 1700 U | 1600 UJ | 1700 UJ | 1800 UJ | 1800 UJ | 1700 UJ | 1700 UJ |
| ›is(2-Chloroethoxy)methane | 330 | 350 U | 350 U | 340 U | 350 U | 370 U | 370 U | 340 U | 360 U |
| ?,4-Dichlorophenol | 330 | 350 U | 350 U | 340 U | 350 U | 370 U | 370 U | 340 U | 360 U |
| l,2,4-Trichlorobenzene | 330 | 350 U | 350 U | 340 U | 350 U | 370 U | 370 U | 340 U | 360 U |
| laphthalene | 330 | 350 U | 350 U | 340 U | 350 U | 370 U | 370 U | 340 U | 360 U |
| ;-Chloroaniline | 330 | 350 U | 350 U | 340 U | 350 U | 370 U | 370 U | 340 U | 360 U |
| lexachlorobutadiene | 330 | 350 U | 350 U | 340 U | 350 U | 370 U | 370 U | 340 U | 360 U |
| ;-Chloro-3-Methylphenol | 330 | 350 U | 350 U | 340 U | 350 U | 370 U | 370 U | 340 U | 360 U |
| ?-Methylnaphthalene | 330 | 350 U | 350 U | 340 U | 350 U | 370 U | 370 U | 340 U | 360 U |
| lexachlorocyclopentadiene | 330 | 350 U | 350 U | 340 U | 350 U | 370 U | 370 U | 340 U | 360 U |
| ?,4,6-Trichlorophenol | 330 | 350 U | 350 U | 340 U | 350 U | 370 U | 370 U | 340 U | 360 U |
| ?,4,5-Trichlorophenol | 1600 | 1700 U | 1700 U | 1600 U | 1700 U | 1800 U | 1800 U | 1700 U | 1700 U |
| ?-Chloronaphthalene | 330 | 350 U | 350 U | 340 U | 350 U | 370 U | 370 U | 340 U | 360 U |
| ?-Nitroaniline | 1600 | 1700 U | 1700 U | 1600 U | 1700 U | 1800 U | 1800 U | 1700 U | 1700 U |
| )imethylphthalate | 330 | 350 U | 350 U | 340 U | 350 U | 370 U | 370 U | 340 U | 360 U |
| lcenaphthylene | 330 | 350 U | 350 U | 340 U | 350 U | 41 JJ | 370 U | 340 U | 360 U |
| ?,6-Dinitrotoluene | 330 | 350 U | 350 U | 340 U | 350 U | 370 U | 370 U | 340 U | 360 U |

Table 2
Validation / Summary Table

| SAMPLE LOCATION: | | 09PS903X0101XD | 09PS903X0101XX | 09PS903X0201XX | 09PS903X0601XX | 09PS904X0101XD | 09PS904X0101XX | 09PS904X0301XX | 09PS904X0701XX |
|---|---|---|---|---|---|---|---|---|---|
| LAB NUMBER: | | 370483 | 370454 | 370481 | 370455 | 370475 | 370477 | 370479 | 370472 |
| DATE SAMPLED: | | 09/18/90 | 09/18/90 | 09/18/90 | 09/18/90 | 09/18/90 | 09/18/90 | 09/18/90 | 09/18/90 |
| DATE EXTRACTED: | | 09/20/90 | 09/21/90 | 09/20/90 | 09/20/90 | 09/20/90 | 09/20/90 | 09/20/90 | 09/20/90 |
| DATE ANALYZED: | | 09/26/90 | 09/25/90 | 09/26/90 | 09/24/90 | 09/24/90 | 09/26/90 | 09/26/90 | 09/24/90 |
| ANALYTE | CRQL | | | | | | | | |
| 3-Nitroaniline | 1600 | 1700 U | 1700 U | 1600 U | 1700 U | 1800 U | 1800 U | 1700 U | 1700 U |
| Acenaphthene | 330 | 350 U | 350 U | 340 U | 350 U | 370 U | 370 U | 340 U | 360 U |
| 2,4-Dinitrophenol | 1600 | 1700 U | 1700 U | 1600 U | 1700 U | 1800 U | 1800 U | 1700 U | 1700 U |
| 4-Nitrophenol | 1600 | 1700 U | 1700 U | 1600 U | 1700 U | 1800 U | 1800 U | 1700 U | 1700 U |
| Dibenzofuran | 330 | 350 U | 350 U | 340 U | 350 U | 370 U | 370 U | 340 U | 360 U |
| 2,4-Dinitrotoluene | 330 | 350 U | 350 U | 340 U | 350 U | 370 U | 370 U | 340 U | 360 U |
| Diethylphthalate | 330 | 350 U | 350 U | 340 U | 350 U | 370 U | 370 U | 340 U | 360 U |
| 4-Chlorophenyl-phenylether | 330 | 350 U | 350 U | 340 U | 350 U | 370 U | 370 U | 340 U | 360 U |
| Fluorene | 330 | 350 U | 350 U | 340 U | 350 U | 370 U | 40 JJ | 340 U | 360 U |
| 4-Nitroaniline | 1600 | 1700 U | 1700 U | 1600 U | 1700 UJ | 1800 UJ | 1800 UJ | 1700 U | 1700 U |
| 4,6-Dinitro-2-methylphenol | 1600 | 1700 U | 1700 U | 1600 U | 1700 U | 1800 U | 1800 U | 1700 U | 1700 U |
| N-Nitrosodiphenylamine | 330 | 350 U | 350 U | 340 U | 350 U | 370 U | 370 U | 340 U | 360 U |
| 4-Bromophenyl-phenylether | 330 | 350 U | 350 U | 340 U | 350 U | 370 U | 370 U | 340 U | 360 U |
| Hexachlorobenzene | 330 | 350 U | 350 U | 340 U | 350 U | 370 U | 370 U | 340 U | 360 U |
| Pentachlorophenol | 1600 | 1700 U | 1700 U | 1600 U | 1700 U | 1800 U | 1800 U | 1700 U | 1700 U |
| Phenanthrene | 330 | 350 U | 68 JJ | 340 U | 350 U | 100 JJ | 690 | 340 U | 360 U |
| Anthracene | 330 | 350 U | 350 U | 340 U | 350 U | 370 U | 160 JJ | 340 U | 360 U |
| Di-n-butylphthalate | 330 | 350 U | 350 U | 340 U | 350 U | 370 U | 370 U | 340 U | 360 U |
| Fluoranthene | 330 | 170 JJ | 160 JJ | 340 U | 350 U | 480 J | 2000 J | 340 U | 360 U |
| Pyrene | 330 | 180 JJ | 170 JJ | 340 U | 350 U | 390 J | 1500 J | 340 U | 360 U |
| Butylbenzylphthalate | 330 | 350 U | 350 U | 340 U | 350 U | 370 U | 370 U | 340 U | 360 U |
| 3,3'-Dichlorobenzidine | 660 | 690 U | 700 U | 670 U | 700 U | 750 U | 740 U | 690 U | 710 U |
| Benzo(a)Anthracene | 330 | 110 JJ | 100 JJ | 340 U | 350 U | 270 JJ | 910 J | 340 U | 360 U |
| Chrysene | 330 | 160 JJ | 78 JJ | 340 U | 350 U | 380 J | 1100 J | 340 U | 360 U |
| bis(2-Ethylhexyl)phthalate | 330 | 350 U | 350 U | 340 U | 350 U | 370 U | 370 U | 340 U | 360 U |
| Di-n-octylphthalate | 330 | 350 U | 350 U | 340 U | 350 U | 370 U | 370 U | 340 U | 360 U |
| Benzo(b)Fluoranthene | 330 | 89 JJ | 170 JJX | 340 U | 350 U | 270 JJ | 730 J | 340 U | 360 U |
| Benzo(k)Fluoranthene | 330 | 140 JJ | 170 JJX | 340 UJ | 350 U | 400 J | 890 J | 340 UJ | 360 UJ |
| Benzo(a)Pyrene | 330 | 120 JJ | 82 JJ | 340 U | 350 U | 290 JJ | 820 J | 340 U | 360 U |
| Indeno(1,2,3-c,d)Pyrene | 330 | 350 U | 64 JJ | 340 UJ | 350 U | 120 JJ | 440 J | 340 U | 360 U |
| Dibenz(a,h)Anthracene | 330 | 350 UJ | 350 U | 340 UJ | 350 U | 370 U | 110 JJ | 340 UJ | 360 UJ |
| Benzo(g,h,i)perylene | 330 | 60 JJ | 72 JJ | 340 UJ | 350 U | 110 JJ | 520 J | 340 UJ | 360 UJ |
| Dilution Factor: | | 1.0 | 1.0 | 1.0 | 1.0 | 1.0 | 1.0 | 1.0 | 1.0 |
| Percent Solids: | | 94 | 94 | 97 | 94 | 88 | 89 | 96 | 92 |
| Associated Method Blank: | | GH070731B07 | GH070856C20 | GH070731B07 | GH070731B07 | GH070731B07 | GH070731B07 | GH070731B07 | GH070731B07 |
| Associated Equipment Blank: | | - | - | - | - | - | - | - | - |
| Associated Field Blank: | | - | - | - | - | - | - | - | - |

Table 2
Validation / Summary Table

| SAMPLE LOCATION: | | 09PS905X0101XD | 09PS905X0101XX | 09PS905X0301XX | 09PS905X0601XX | 09PS906X0101XX | 09PS906X0301XX | 09PS906X0601XX | 09PS907X0201XX |
|---|---|---|---|---|---|---|---|---|---|
| LAB NUMBER: | | 370445 | 370442 | 370444 | 370443 | 370451 | 370441 | 370452 | 370450 |
| DATE SAMPLED: | | 09/18/90 | 09/18/90 | 09/18/90 | 09/18/90 | 09/19/90 | 09/19/90 | 09/19/90 | 09/19/90 |
| DATE EXTRACTED: | | 09/21/90 | 09/21/90 | 09/21/90 | 09/21/90 | 09/21/90 | 09/21/90 | 09/21/90 | 09/21/90 |
| DATE ANALYZED: | | 09/25/90 | 09/24/90 | 09/24/90 | 09/24/90 | 09/27/90 | 09/24/90 | 09/27/90 | 09/27/90 |
| ANALYTE | CRQL | | | | | | | | |
| Phenol | 330 | 340 U | 340 U | 330 U | 350 U | 350 U | 340 U | 360 U | 350 U |
| bis(2-Chloroethyl)ether | 330 | 340 U | 340 U | 330 U | 350 U | 350 U | 340 U | 360 U | 350 U |
| 2-Chlorophenol | 330 | 340 U | 340 U | 330 U | 350 U | 350 U | 340 U | 360 U | 350 U |
| 1,3-Dichlorobenzene | 330 | 340 U | 340 U | 330 U | 350 U | 350 U | 340 U | 360 U | 350 U |
| 1,4-Dichlorobenzene | 330 | 340 U | 340 U | 330 U | 350 U | 350 U | 340 U | 360 U | 350 U |
| Benzyl Alcohol | 330 | 340 U | 340 U | 330 U | 350 U | 350 U | 340 U | 360 U | 350 U |
| 1,2-Dichlorobenzene | 330 | 340 U | 340 U | 330 U | 350 U | 350 U | 340 U | 360 U | 350 U |
| 2-Methylphenol | 330 | 340 U | 340 U | 330 U | 350 U | 350 U | 340 UJ | 360 U | 350 U |
| bis(2-Chloroisopropyl)ether | 330 | 340 U | 340 UJ | 330 UJ | 350 UJ | 350 U | 340 U | 360 U | 350 U |
| 4-Methylphenol | 330 | 340 U | 340 U | 330 U | 350 U | 350 U | 340 U | 360 U | 350 U |
| N-Nitroso-di-n-propylamine | 330 | 340 U | 340 U | 330 U | 350 U | 350 U | 340 U | 360 U | 350 U |
| Hexachloroethane | 330 | 340 U | 340 U | 330 U | 350 U | 350 U | 340 U | 360 U | 350 U |
| Nitrobenzene | 330 | 340 U | 340 U | 330 U | 350 U | 350 U | 340 U | 360 U | 350 U |
| Isophorone | 330 | 340 U | 340 U | 330 U | 350 U | 350 U | 340 U | 360 U | 350 U |
| 2-Nitrophenol | 330 | 340 U | 340 U | 330 U | 350 U | 350 U | 340 U | 360 U | 350 U |
| 2,4-Dimethylphenol | 330 | 340 U | 340 U | 330 U | 350 U | 350 U | 340 U | 360 U | 350 U |
| Benzoic Acid | 1600 | 1700 U | 1700 U | 1600 U | 1700 U | 1700 UJ | 1600 U | 1700 UJ | 1700 UJ |
| bis(2-Chloroethoxy)methane | 330 | 340 U | 340 U | 330 U | 350 U | 350 U | 340 U | 360 U | 350 U |
| 2,4-Dichlorophenol | 330 | 340 U | 340 U | 330 U | 350 U | 350 U | 340 U | 360 U | 350 U |
| 1,2,4-Trichlorobenzene | 330 | 340 U | 340 U | 330 U | 350 U | 350 U | 340 U | 360 U | 350 U |
| Naphthalene | 330 | 340 U | 340 U | 330 U | 350 U | 350 U | 340 U | 360 U | 350 U |
| 4-Chloroaniline | 330 | 340 U | 340 U | 330 U | 350 U | 350 U | 340 U | 360 U | 350 U |
| Hexachlorobutadiene | 330 | 340 U | 340 U | 330 U | 350 U | 350 U | 340 U | 360 U | 350 U |
| 4-Chloro-3-Methylphenol | 330 | 340 U | 340 U | 330 U | 350 U | 350 U | 340 U | 360 U | 350 U |
| 2-Methylnaphthalene | 330 | 340 U | 340 U | 330 U | 350 U | 350 U | 340 U | 360 U | 350 U |
| Hexachlorocyclopentadiene | 330 | 340 U | 340 U | 330 U | 350 U | 350 U | 340 U | 360 U | 350 U |
| 2,4,6-Trichlorophenol | 330 | 340 U | 340 U | 330 U | 350 U | 350 U | 340 U | 360 U | 350 U |
| 2,4,5-Trichlorophenol | 1600 | 1700 U | 1700 U | 1600 U | 1700 U | 1700 U | 1600 U | 1700 U | 1700 U |
| 2-Chloronaphthalene | 330 | 340 U | 340 U | 330 U | 350 U | 350 U | 340 U | 360 U | 350 U |
| 2-Nitroaniline | 1600 | 1700 U | 1700 U | 1600 U | 1700 U | 1700 U | 1600 U | 1700 U | 1700 U |
| Dimethylphthalate | 330 | 340 U | 340 U | 330 U | 350 U | 350 U | 340 U | 360 U | 350 U |
| Acenaphthylene | 330 | 340 U | 340 U | 330 U | 350 U | 350 U | 340 U | 360 U | 350 U |
| 2,6-Dinitrotoluene | 330 | 340 U | 340 U | 330 U | 350 U | 350 U | 340 U | 360 U | 350 U |

Table 2
Validation / Summary Table

| SAMPLE LOCATION: | | 09PS905X0101XD | 09PS905X0101XX | 09PS905X0301XX | 09PS905X0601XX | 09PS906X0101XX | 09PS906X0301XX | 09PS906X0601XX | 09PS907X0201XX |
|---|---|---|---|---|---|---|---|---|---|
| LAB NUMBER: | | 370445 | 370442 | 370444 | 370443 | 370451 | 370441 | 370452 | 370450 |
| DATE SAMPLED: | | 09/18/90 | 09/18/90 | 09/18/90 | 09/18/90 | 09/19/90 | 09/19/90 | 09/19/90 | 09/19/90 |
| DATE EXTRACTED: | | 09/21/90 | 09/21/90 | 09/21/90 | 09/21/90 | 09/21/90 | 09/21/90 | 09/21/90 | 09/21/90 |
| DATE ANALYZED: | | 09/25/90 | 09/24/90 | 09/24/90 | 09/24/90 | 09/27/90 | 09/24/90 | 09/27/90 | 09/27/90 |
| ANALYTE | CRQL | | | | | | | | |
| 3-Nitroaniline | 1600 | 1700 U | 1700 U | 1600 U | 1700 U | 1700 U | 1600 U | 1700 U | 1700 U |
| Acenaphthene | 330 | 340 U | 340 U | 330 U | 350 U | 350 U | 340 U | 360 U | 350 U |
| 2,4-Dinitrophenol | 1600 | 1700 U | 1700 U | 1600 U | 1700 U | 1700 U | 1600 U | 1700 U | 1700 U |
| 4-Nitrophenol | 1600 | 1700 U | 1700 U | 1600 U | 1700 U | 1700 U | 1600 U | 1700 U | 1700 U |
| Dibenzofuran | 330 | 340 U | 340 U | 330 U | 350 U | 350 U | 340 U | 360 U | 350 U |
| 2,4-Dinitrotoluene | 330 | 340 U | 340 U | 330 U | 350 U | 350 U | 340 U | 360 U | 350 U |
| Diethylphthalate | 330 | 340 U | 340 U | 330 U | 350 U | 350 U | 340 U | 360 U | 350 U |
| 4-Chlorophenyl-phenylether | 330 | 340 U | 340 U | 330 U | 350 U | 350 U | 340 U | 360 U | 350 U |
| Fluorene | 330 | 340 U | 340 U | 330 U | 350 U | 350 U | 340 U | 360 U | 350 U |
| 4-Nitroaniline | 1600 | 1700 U | 1700 U | 1600 U | 1700 U | 1700 U | 1600 U | 1700 U | 1700 U |
| 4,6-Dinitro-2-methylphenol | 1600 | 1700 U | 1700 U | 1600 U | 1700 U | 1700 U | 1600 U | 1700 U | 1700 U |
| N-Nitrosodiphenylamine | 330 | 340 U | 340 U | 330 U | 350 U | 350 U | 340 U | 360 U | 350 U |
| 4-Bromophenyl-phenylether | 330 | 340 U | 340 U | 330 U | 350 U | 350 U | 340 U | 360 U | 350 U |
| Hexachlorobenzene | 330 | 340 U | 340 U | 330 U | 350 U | 350 U | 340 U | 360 U | 350 U |
| Pentachlorophenol | 1600 | 1700 U | 1700 U | 1600 U | 1700 U | 1700 U | 1600 U | 1700 U | 1700 U |
| Phenanthrene | 330 | 340 U | 340 U | 330 U | 350 U | 350 U | 340 U | 360 U | 100 JJ |
| Anthracene | 330 | 340 U | 340 U | 330 U | 350 U | 350 U | 340 U | 360 U | 350 U |
| Di-n-butylphthalate | 330 | 340 U | 340 U | 330 U | 350 U | 350 U | 340 U | 360 U | 350 U |
| Fluoranthene | 330 | 340 U | 340 U | 330 U | 350 U | 350 U | 340 U | 360 U | 230 JJ |
| Pyrene | 330 | 340 U | 340 U | 330 U | 350 U | 350 U | 340 U | 360 U | 200 JJ |
| Butylbenzylphthalate | 330 | 340 U | 340 U | 330 U | 350 U | 350 U | 340 U | 360 U | 350 U |
| 3,3'-Dichlorobenzidine | 660 | 690 U | 680 U | 660 U | 710 U | 700 U | 670 U | 720 U | 700 U |
| Benzo(a)Anthracene | 330 | 340 U | 340 U | 330 U | 350 U | 350 U | 340 U | 360 U | 91 JJ |
| Chrysene | 330 | 340 U | 340 U | 330 U | 350 U | 350 U | 340 U | 360 U | 120 JJ |
| bis(2-Ethylhexyl)phthalate | 330 | 340 U | 340 U | 330 U | 350 U | 350 U | 340 U | 360 U | 350 U |
| Di-n-octylphthalate | 330 | 340 U | 340 U | 330 U | 350 U | 350 U | 340 U | 360 U | 350 U |
| Benzo(b)Fluoranthene | 330 | 340 U | 340 U | 330 U | 350 U | 350 U | 340 U | 360 U | 120 JJ |
| Benzo(k)Fluoranthene | 330 | 340 U | 340 U | 330 U | 350 U | 350 U | 340 U | 360 U | 150 JJ |
| Benzo(a)Pyrene | 330 | 340 U | 340 U | 330 U | 350 U | 350 U | 340 U | 360 U | 92 JJ |
| Indeno(1,2,3-c,d)Pyrene | 330 | 340 U | 340 U | 330 U | 350 U | 350 U | 340 U | 360 U | 350 U |
| Dibenz(a,h)Anthracene | 330 | 340 U | 340 U | 330 U | 350 U | 350 UJ | 340 U | 360 UJ | 350 UJ |
| Benzo(g,h,i)perylene | 330 | 340 U | 340 U | 330 U | 350 U | 350 UJ | 340 U | 360 UJ | 350 UJ |
| Dilution Factor: | | 1.0 | 1.0 | 1.0 | 1.0 | 1.0 | 1.0 | 1.0 | 1.0 |
| Percent Solids: | | 94 | 94 | 97 | 91 | 94 | 96 | 91 | 93 |
| Associated Method Blank: | | GH070859C20 | GH070859C20 | GH070859C20 | GH070859C20 | GJ070860A07 | GH070859C20 | GJ070860A07 | GJ070860A07 |
| Associated Equipment Blank: | | - | - | - | - | - | - | - | - |
| Associated Field Blank: | | - | - | - | - | - | - | - | - |

Table 2
Validation / Summary Table

| SAMPLE LOCATION: | | 09PS907X0401XX | 09PS907X0701XX | 09PS908X0101XX | 09PS908X0301XX | 09PS908X0801XX | 09PS909X0101XX | 09PS909X0301XX | 09PS909X0601XX |
|---|---|---|---|---|---|---|---|---|---|
| LAB NUMBER: | | 370446 | 370448 | 370907 | 370922 | 370909 | 370447 | 370449 | 370453 |
| DATE SAMPLED: | | 09/19/90 | 09/19/90 | 09/19/90 | 09/19/90 | 09/19/90 | 09/19/90 | 09/19/90 | 09/19/90 |
| DATE EXTRACTED: | | 09/21/90 | 09/21/90 | 09/28/90 | 09/22/90 | 09/28/90 | 09/21/90 | 09/21/90 | 09/21/90 |
| DATE ANALYZED: | | 09/27/90 | 09/27/90 | 10/08/90 | 09/26/90 | 10/08/90 | 09/24/90 | 09/27/90 | 09/27/90 |
| ANALYTE | CRQL | | | | | | | | |
| Phenol | 330 | 370 U | 420 U | 330 UJ | 330 U | 410 UJ | 340 U | 350 U | 420 U |
| bis(2-Chloroethyl)ether | 330 | 370 U | 420 U | 330 UJ | 330 U | 410 UJ | 340 U | 350 U | 420 U |
| 2-Chlorophenol | 330 | 370 U | 420 U | 330 UJ | 330 U | 410 UJ | 340 U | 350 U | 420 U |
| 1,3-Dichlorobenzene | 330 | 370 U | 420 U | 330 UJ | 330 U | 410 UJ | 340 U | 350 U | 420 U |
| 1,4-Dichlorobenzene | 330 | 370 U | 420 U | 330 UJ | 330 U | 410 UJ | 340 U | 350 U | 420 U |
| Benzyl Alcohol | 330 | 370 U | 420 U | 330 UJ | 330 U | 410 UJ | 340 U | 350 U | 420 U |
| 1,2-Dichlorobenzene | 330 | 370 U | 420 U | 330 UJ | 330 U | 410 UJ | 340 U | 350 U | 420 U |
| 2-Methylphenol | 330 | 370 U | 420 U | 330 UJ | 330 U | 410 UJ | 340 U | 350 U | 420 U |
| bis(2-Chloroisopropyl)ether | 330 | 370 U | 420 U | 330 UJ | 330 U | 410 UJ | 340 U | 350 U | 420 U |
| 4-Methylphenol | 330 | 370 U | 420 U | 330 UJ | 330 U | 410 UJ | 340 U | 350 U | 420 U |
| N-Nitroso-di-n-propylamine | 330 | 370 U | 420 U | 330 UJ | 330 U | 410 UJ | 340 U | 350 U | 420 U |
| Hexachloroethane | 330 | 370 U | 420 U | 330 UJ | 330 U | 410 UJ | 340 U | 350 U | 420 U |
| Nitrobenzene | 330 | 370 U | 420 U | 330 UJ | 330 U | 410 UJ | 340 U | 350 U | 420 U |
| Isophorone | 330 | 370 U | 420 U | 330 UJ | 330 U | 410 UJ | 340 U | 350 U | 420 U |
| 2-Nitrophenol | 330 | 370 U | 420 U | 330 UJ | 330 U | 410 UJ | 340 U | 350 U | 420 U |
| 2,4-Dimethylphenol | 330 | 370 U | 420 U | 330 UJ | 330 U | 410 UJ | 340 U | 350 U | 420 U |
| Benzoic Acid | 1600 | 1800 UJ | 2000 UJ | 1600 UJ | 1600 UJ | 2000 UJ | 1700 U | 1700 UJ | 2000 UJ |
| bis(2-Chloroethoxy)methane | 330 | 370 U | 420 U | 330 UJ | 330 U | 410 UJ | 340 U | 350 U | 420 U |
| 2,4-Dichlorophenol | 330 | 370 U | 420 U | 330 UJ | 330 U | 410 UJ | 340 U | 350 U | 420 U |
| 1,2,4-Trichlorobenzene | 330 | 370 U | 420 U | 330 UJ | 330 U | 410 UJ | 340 U | 350 U | 420 U |
| Naphthalene | 330 | 370 U | 420 U | 330 UJ | 330 U | 410 UJ | 340 U | 350 U | 420 U |
| 4-Chloroaniline | 330 | 370 U | 420 U | 330 UJ | 330 U | 410 UJ | 340 U | 350 U | 420 U |
| Hexachlorobutadiene | 330 | 370 U | 420 U | 330 UJ | 330 U | 410 UJ | 340 U | 350 U | 420 U |
| 4-Chloro-3-Methylphenol | 330 | 370 U | 420 U | 330 UJ | 330 U | 410 UJ | 340 U | 350 U | 420 U |
| 2-Methylnaphthalene | 330 | 370 U | 420 U | 330 UJ | 330 U | 410 UJ | 340 U | 350 U | 420 U |
| Hexachlorocyclopentadiene | 330 | 370 U | 420 U | 330 UJ | 330 U | 410 UJ | 340 U | 350 U | 420 U |
| 2,4,6-Trichlorophenol | 330 | 370 U | 420 U | 330 UJ | 330 U | 410 UJ | 340 U | 350 U | 420 U |
| 2,4,5-Trichlorophenol | 1600 | 1800 U | 2000 U | 1600 UJ | 1600 U | 2000 UJ | 1700 U | 1700 U | 2000 U |
| 2-Chloronaphthalene | 330 | 370 U | 420 U | 330 UJ | 330 U | 410 UJ | 340 U | 350 U | 420 U |
| 2-Nitroaniline | 1600 | 1800 U | 2000 U | 1600 UJ | 1600 U | 2000 UJ | 1700 U | 1700 U | 2000 U |
| Dimethylphthalate | 330 | 370 U | 420 U | 330 UJ | 330 U | 410 UJ | 340 U | 350 U | 420 U |
| Acenaphthylene | 330 | 370 U | 420 U | 330 UJ | 330 U | 410 UJ | 340 U | 350 U | 420 U |
| 2,6-Dinitrotoluene | 330 | 370 U | 420 U | 330 UJ | 330 U | 410 UJ | 340 U | 350 U | 420 U |

Table 2
Validation / Summary Table

| SAMPLE LOCATION: | | 09PS907X0401XX | 09PS907X0701XX | 09PS908X0101XX | 09PS908X0301XX | 09PS908X0801XX | 09PS909X0101XX | 09PS909X0301XX | 09PS909X0601XX |
|---|---|---|---|---|---|---|---|---|---|
| LAB NUMBER: | | 370446 | 370448 | 370907 | 370922 | 370909 | 370447 | 370449 | 370453 |
| DATE SAMPLED: | | 09/19/90 | 09/19/90 | 09/19/90 | 09/19/90 | 09/19/90 | 09/19/90 | 09/19/90 | 09/19/90 |
| DATE EXTRACTED: | | 09/21/90 | 09/21/90 | 09/28/90 | 09/22/90 | 09/28/90 | 09/21/90 | 09/21/90 | 09/21/90 |
| DATE ANALYZED: | | 09/27/90 | 09/27/90 | 10/08/90 | 09/26/90 | 10/08/90 | 09/24/90 | 09/27/90 | 09/27/90 |
| ANALYTE | CRQL | | | | | | | | |
| 3-Nitroaniline | 1600 | 1800 U | 2000 U | 1600 UJ | 1600 U | 2000 UJ | 1700 U | 1700 U | 2000 U |
| Acenaphthene | 330 | 370 U | 420 U | 330 UJ | 330 U | 410 UJ | 340 U | 350 U | 420 U |
| 2,4-Dinitrophenol | 1600 | 1800 U | 2000 U | 1600 UJ | 1600 U | 2000 UJ | 1700 U | 1700 U | 2000 U |
| 4-Nitrophenol | 1600 | 1800 U | 2000 U | 1600 UJ | 1600 U | 2000 UJ | 1700 UJ | 1700 U | 2000 U |
| Dibenzofuran | 330 | 370 U | 420 U | 330 UJ | 330 U | 410 UJ | 340 U | 350 U | 420 U |
| 2,4-Dinitrotoluene | 330 | 370 U | 420 U | 330 UJ | 330 U | 410 UJ | 340 U | 350 U | 420 U |
| Diethylphthalate | 330 | 370 U | 420 U | 330 UJ | 330 U | 410 UJ | 340 U | 350 U | 420 U |
| 4-Chlorophenyl-phenylether | 330 | 370 U | 420 U | 330 UJ | 330 U | 410 UJ | 340 U | 350 U | 420 U |
| Fluorene | 330 | 370 U | 420 U | 330 UJ | 330 U | 410 UJ | 340 U | 350 U | 420 U |
| 4-Nitroaniline | 1600 | 1800 U | 2000 U | 1600 UJ | 1600 U | 2000 UJ | 1700 U | 1700 U | 2000 U |
| 4,6-Dinitro-2-methylphenol | 1600 | 1800 U | 2000 U | 1600 UJ | 1600 U | 2000 UJ | 1700 U | 1700 U | 2000 U |
| N-Nitrosodiphenylamine | 330 | 370 U | 420 U | 330 UJ | 330 U | 410 UJ | 340 U | 350 U | 420 U |
| 4-Bromophenyl-phenylether | 330 | 370 U | 420 U | 330 UJ | 330 U | 410 UJ | 340 U | 350 U | 420 U |
| Hexachlorobenzene | 330 | 370 U | 420 U | 330 UJ | 330 U | 410 UJ | 340 U | 350 U | 420 U |
| Pentachlorophenol | 1600 | 1800 U | 2000 U | 1600 UJ | 1600 U | 2000 UJ | 1700 U | 1700 U | 2000 U |
| Phenanthrene | 330 | 370 U | 420 U | 330 UJ | 330 U | 410 UJ | 340 U | 350 U | 420 U |
| Anthracene | 330 | 370 U | 420 U | 330 UJ | 330 U | 410 UJ | 340 U | 350 U | 420 U |
| Di-n-butylphthalate | 330 | 370 U | 420 U | 330 UJ | 330 U | 410 UJ | 340 U | 350 U | 420 U |
| Fluoranthene | 330 | 49 JJ | 420 U | 330 UJ | 330 U | 410 UJ | 340 U | 350 U | 420 U |
| Pyrene | 330 | 46 JJ | 420 U | 330 UJ | 330 U | 410 UJ | 340 U | 350 U | 420 U |
| Butylbenzylphthalate | 330 | 370 U | 420 U | 330 UJ | 330 U | 410 UJ | 340 U | 350 U | 420 U |
| 3,3'-Dichlorobenzidine | 660 | 730 U | 840 U | 670 UJ | 660 U | 820 UJ | 690 U | 700 U | 840 U |
| Benzo(a)Anthracene | 330 | 370 U | 420 U | 330 UJ | 330 U | 410 UJ | 340 U | 350 U | 420 U |
| Chrysene | 330 | 370 U | 420 U | 330 UJ | 330 U | 410 UJ | 340 U | 350 U | 420 U |
| bis(2-Ethylhexyl)phthalate | 330 | 370 U | 420 U | 330 UJ | 51 JJ | 410 UJ | 340 U | 350 U | 420 U |
| Di-n-octylphthalate | 330 | 370 U | 420 U | 330 UJ | 330 U | 410 UJ | 340 U | 350 U | 420 U |
| Benzo(b)Fluoranthene | 330 | 370 U | 420 U | 330 UJ | 330 U | 410 UJ | 340 U | 350 U | 420 U |
| Benzo(k)Fluoranthene | 330 | 370 U | 420 U | 330 UJ | 330 UJ | 410 UJ | 340 U | 350 U | 420 U |
| Benzo(a)Pyrene | 330 | 370 U | 420 U | 330 UJ | 330 U | 410 UJ | 340 U | 350 U | 420 U |
| Indeno(1,2,3-c,d)Pyrene | 330 | 370 U | 420 U | 330 UJ | 330 U | 410 UJ | 340 U | 350 U | 420 U |
| Dibenz(a,h)Anthracene | 330 | 370 UJ | 420 UJ | 330 UJ | 330 UJ | 410 UJ | 340 U | 350 UJ | 420 UJ |
| Benzo(g,h,i)perylene | 330 | 370 UJ | 420 UJ | 330 UJ | 330 UJ | 410 UJ | 340 U | 350 UJ | 420 UJ |
| Dilution Factor: | | 1.0 | 1.0 | 1.0 | 1.0 | 1.0 | 1.0 | 1.0 | 1.0 |
| Percent Solids: | | 90 | 78 | 98 | 98 | 79 | 95 | 93 | 77 |
| Associated Method Blank: | | GJ070860A07 | GJ070860A07 | GH071687C05 | GH071047A07 | GH071687C05 | GJ070860B08 | GJ070860A07 | GJ070860A07 |
| Associated Equipment Blank: | | - | - | - | - | - | - | - | - |
| Associated Field Blank: | | - | - | - | - | - | - | - | - |

Table 2
Validation / Summary Table

| SAMPLE LOCATION: | | 09PS910X0201XX | | 09PS910X0401XX | | 09PS910X0701XX | | 09PS911X0201XX | | 09PS911X0401XX | | 09PS911X0801XX | |
|---|---|---|---|---|---|---|---|---|---|---|---|---|---|
| LAB NUMBER: | | 370934 | | 370913 | | 370927 | | 370932 | | 370936 | | 370938 | |
| DATE SAMPLED: | | 09/19/90 | | 09/19/90 | | 09/19/90 | | 09/19/90 | | 09/19/90 | | 09/19/90 | |
| DATE EXTRACTED: | | 09/22/90 | | 10/10/90 | | 09/22/90 | | 09/22/90 | | 09/22/90 | | 09/22/90 | |
| DATE ANALYZED: | | 09/26/90 | | 10/12/90 | | 09/26/90 | | 09/26/90 | | 09/26/90 | | 09/26/90 | |
| ANALYTE | CRQL | | | | | | | | | | | | |
| Phenol | 330 | 360 | U | 350 | UJ | 350 | U | 340 | U | 360 | U | 370 | U |
| bis(2-Chloroethyl)ether | 330 | 360 | U | 350 | UJ | 350 | U | 340 | U | 360 | U | 370 | U |
| 2-Chlorophenol | 330 | 360 | U | 350 | UJ | 350 | U | 340 | U | 360 | U | 370 | U |
| 1,3-Dichlorobenzene | 330 | 360 | U | 350 | UJ | 350 | U | 340 | U | 360 | U | 370 | U |
| 1,4-Dichlorobenzene | 330 | 360 | U | 350 | UJ | 350 | U | 340 | U | 360 | U | 370 | U |
| Benzyl Alcohol | 330 | 360 | U | 350 | UJ | 350 | U | 340 | U | 360 | U | 370 | U |
| 1,2-Dichlorobenzene | 330 | 360 | U | 350 | UJ | 350 | U | 340 | U | 360 | U | 370 | U |
| 2-Methylphenol | 330 | 360 | U | 350 | UJ | 350 | U | 340 | U | 360 | U | 370 | U |
| bis(2-Chloroisopropyl)ether | 330 | 360 | U | 350 | UJ | 350 | U | 340 | U | 360 | U | 370 | U |
| 4-Methylphenol | 330 | 360 | U | 350 | UJ | 350 | U | 340 | U | 360 | U | 370 | U |
| N-Nitroso-di-n-propylamine | 330 | 360 | U | 350 | UJ | 350 | U | 340 | U | 360 | U | 370 | U |
| Hexachloroethane | 330 | 360 | U | 350 | UJ | 350 | U | 340 | U | 360 | U | 370 | U |
| Nitrobenzene | 330 | 360 | U | 350 | UJ | 350 | U | 340 | U | 360 | U | 370 | U |
| Isophorone | 330 | 360 | U | 350 | UJ | 350 | U | 340 | U | 360 | U | 370 | U |
| 2-Nitrophenol | 330 | 360 | U | 350 | UJ | 350 | U | 340 | U | 360 | U | 370 | U |
| 2,4-Dimethylphenol | 330 | 360 | U | 350 | UJ | 350 | U | 340 | U | 360 | U | 370 | U |
| Benzoic Acid | 1600 | 1700 | UJ | 1700 | UJ | 1700 | UJ | 1700 | UJ | 1700 | UJ | 1800 | UJ |
| bis(2-Chloroethoxy)methane | 330 | 360 | U | 350 | UJ | 350 | U | 340 | U | 360 | U | 370 | U |
| 2,4-Dichlorophenol | 330 | 360 | U | 350 | UJ | 350 | U | 340 | U | 360 | U | 370 | U |
| 1,2,4-Trichlorobenzene | 330 | 360 | U | 350 | UJ | 350 | U | 340 | U | 360 | U | 370 | U |
| Naphthalene | 330 | 360 | U | 350 | UJ | 350 | U | 340 | U | 360 | U | 370 | U |
| 4-Chloroaniline | 330 | 360 | U | 350 | UJ | 350 | U | 340 | U | 360 | U | 370 | U |
| Hexachlorobutadiene | 330 | 360 | U | 350 | UJ | 350 | U | 340 | U | 360 | U | 370 | U |
| 4-Chloro-3-Methylphenol | 330 | 360 | U | 350 | UJ | 350 | U | 340 | U | 360 | U | 370 | U |
| 2-Methylnaphthalene | 330 | 360 | U | 350 | UJ | 350 | U | 340 | U | 360 | U | 370 | U |
| Hexachlorocyclopentadiene | 330 | 360 | U | 350 | UJ | 350 | U | 340 | U | 360 | U | 370 | U |
| 2,4,6-Trichlorophenol | 330 | 360 | U | 350 | UJ | 350 | U | 340 | U | 360 | U | 370 | U |
| 2,4,5-Trichlorophenol | 1600 | 1700 | U | 1700 | UJ | 1700 | U | 1700 | U | 1700 | U | 1800 | U |
| 2-Chloronaphthalene | 330 | 360 | U | 350 | UJ | 350 | U | 340 | U | 360 | U | 370 | U |
| 2-Nitroaniline | 1600 | 1700 | U | 1700 | UJ | 1700 | U | 1700 | U | 1700 | U | 1800 | U |
| Dimethylphthalate | 330 | 360 | U | 350 | UJ | 350 | U | 340 | U | 360 | U | 370 | U |
| Acenaphthylene | 330 | 360 | U | 350 | UJ | 350 | U | 340 | U | 360 | U | 370 | U |
| 2,6-Dinitrotoluene | 330 | 360 | U | 350 | UJ | 350 | U | 340 | U | 360 | U | 370 | U |

Table 2
Validation / Summary Table

| SAMPLE LOCATION: | | 09PS910X0201XX | 09PS910X0401XX | 09PS910X0701XX | 09PS911X0201XX | 09PS911X0401XX | 09PS911X0801XX |
|---|---|---|---|---|---|---|---|
| LAB NUMBER: | | 370934 | 370913 | 370927 | 370932 | 370936 | 370938 |
| DATE SAMPLED: | | 09/19/90 | 09/19/90 | 09/19/90 | 09/19/90 | 09/19/90 | 09/19/90 |
| DATE EXTRACTED: | | 09/22/90 | 10/10/90 | 09/22/90 | 09/22/90 | 09/22/90 | 09/22/90 |
| DATE ANALYZED: | | 09/26/90 | 10/12/90 | 09/26/90 | 09/26/90 | 09/26/90 | 09/26/90 |
| ANALYTE | CRQL | | | | | | |
| 3-Nitroaniline | 1600 | 1700 U | 1700 UJ | 1700 U | 1700 U | 1700 U | 1800 U |
| Acenaphthene | 330 | 360 U | 350 UJ | 350 U | 340 U | 360 U | 370 U |
| 2,4-Dinitrophenol | 1600 | 1700 U | 1700 UJ | 1700 U | 1700 U | 1700 U | 1800 U |
| 4-Nitrophenol | 1600 | 1700 U | 1700 UJ | 1700 U | 1700 U | 1700 U | 1800 U |
| Dibenzofuran | 330 | 360 U | 350 UJ | 350 U | 340 U | 360 U | 370 U |
| 2,4-Dinitrotoluene | 330 | 360 U | 350 UJ | 350 U | 340 U | 360 U | 370 U |
| Diethylphthalate | 330 | 360 U | 350 UJ | 350 U | 340 U | 360 U | 370 U |
| 4-Chlorophenyl-phenylether | 330 | 360 U | 350 UJ | 350 U | 340 U | 360 U | 370 U |
| Fluorene | 330 | 360 U | 350 UJ | 350 U | 95 JJ | 360 U | 370 U |
| 4-Nitroaniline | 1600 | 1700 U | 1700 UJ | 1700 U | 1700 U | 1700 U | 1800 U |
| 4,6-Dinitro-2-methylphenol | 1600 | 1700 U | 1700 UJ | 1700 U | 1700 U | 1700 U | 1800 U |
| N-Nitrosodiphenylamine | 330 | 360 U | 350 UJ | 350 U | 340 U | 360 U | 370 U |
| 4-Bromophenyl-phenylether | 330 | 360 U | 350 UJ | 350 U | 340 U | 360 U | 370 U |
| Hexachlorobenzene | 330 | 360 U | 350 UJ | 350 U | 340 U | 360 U | 370 U |
| Pentachlorophenol | 1600 | 1700 U | 1700 UJ | 1700 U | 1700 U | 1700 U | 1800 U |
| Phenanthrene | 330 | 93 JJ | 350 UJ | 350 U | 1100 | 360 U | 370 U |
| Anthracene | 330 | 360 U | 350 UJ | 350 U | 200 JJ | 360 U | 370 U |
| Di-n-butylphthalate | 330 | 360 U | 350 UJ | 350 U | 340 U | 360 U | 370 U |
| Fluoranthene | 330 | 220 JJ | 350 UJ | 350 U | 2100 | 110 JJ | 370 U |
| Pyrene | 330 | 190 JJ | 350 UJ | 350 U | 1600 | 130 JJ | 370 U |
| Butylbenzylphthalate | 330 | 360 U | 350 UJ | 350 U | 340 U | 360 U | 370 U |
| 3,3'-Dichlorobenzidine | 660 | 720 U | 690 UJ | 700 U | 680 U | 710 U | 740 U |
| Benzo(a)Anthracene | 330 | 79 JJ | 350 UJ | 350 U | 790 | 73 JJ | 370 U |
| Chrysene | 330 | 140 JJ | 350 UJ | 350 U | 840 | 110 JJ | 370 U |
| bis(2-Ethylhexyl)phthalate | 330 | 360 U | 350 UJ | 350 U | 340 U | 360 U | 370 U |
| Di-n-octylphthalate | 330 | 360 U | 350 UJ | 350 U | 340 U | 360 U | 370 U |
| Benzo(b)Fluoranthene | 330 | 71 JJ | 350 UJ | 350 U | 480 | 72 JJ | 370 U |
| Benzo(k)Fluoranthene | 330 | 100 JJ | 350 UJ | 350 UJ | 730 J | 71 JJ | 370 UJ |
| Benzo(a)Pyrene | 330 | 73 JJ | 350 UJ | 350 U | 570 | 65 JJ | 370 U |
| Indeno(1,2,3-c,d)Pyrene | 330 | 360 UJ | 350 UJ | 350 UJ | 380 J | 360 UJ | 370 UJ |
| Dibenz(a,h)Anthracene | 330 | 360 UJ | 350 UJ | 350 UJ | 100 JJ | 360 UJ | 370 UJ |
| Benzo(g,h,i)perylene | 330 | 360 UJ | 350 UJ | 350 UJ | 470 J | 360 UJ | 370 UJ |
| Dilution Factor: | | 1.0 | 1.0 | 1.0 | 1.0 | 1.0 | 1.0 |
| Percent Solids: | | 91 | 93 | 92 | 95 | 92 | 88 |
| Associated Method Blank: | | GH071047A07 | GH073091C05 | GH071047A07 | GH071047A07 | GH071047A07 | GH071047A07 |
| Associated Equipment Blank: | | - | - | - | - | - | - |
| Associated Field Blank: | | - | - | - | - | - | - |

Table 2
Validation / Summary Table

| SAMPLE LOCATION: | | 09PS903X0101XD | 09PS903X0101XX | 09PS903X0201XX | 09PS903X0601XX | 09PS904X0101XD | 09PS904X0101XX | 09PS904X0301XX | 09PS904X0701XX |
|---|---|---|---|---|---|---|---|---|---|
| LAB NUMBER: | | 370483 | 370454 | 370481 | 370455 | 370475 | 370477 | 370479 | 370472 |
| DATE SAMPLED: | | 09/18/90 | 09/18/90 | 09/18/90 | 09/18/90 | 09/18/90 | 09/18/90 | 09/18/90 | 09/18/90 |
| DATE EXTRACTED: | | 09/20/90 | 09/21/90 | 09/20/90 | 09/20/90 | 09/20/90 | 09/20/90 | 09/20/90 | 09/20/90 |
| DATE ANALYZED: | | 09/27/90 | 09/27/90 | 09/27/90 | 09/26/90 | 09/26/90 | 09/26/90 | 10/03/90 | 09/26/90 |
| ANALYTE | CRQL | | | | | | | | |
| alpha-BHC | 8 | 8.4 U | 8.5 U | 8.2 U | 8.4 U | 9 U | 8.9 U | 8.3 U | 8.6 U |
| beta-BHC | 8 | 8.4 U | 8.5 U | 8.2 U | 8.4 U | 9 U | 8.9 U | 8.3 U | 8.6 U |
| delta-BHC | 8 | 8.4 U | 8.5 U | 8.2 U | 8.4 U | 9 U | 8.9 U | 8.3 U | 8.6 U |
| gamma-BHC (Lindane) | 8 | 8.4 U | 8.5 U | 8.2 U | 8.4 U | 9 U | 8.9 U | 8.3 U | 8.6 U |
| Heptachlor | 8 | 8.4 U | 8.5 U | 8.2 U | 8.4 U | 9 U | 8.9 U | 8.3 U | 8.6 U |
| Aldrin | 8 | 8.4 U | 8.5 U | 8.2 U | 8.4 U | 9 U | 8.9 U | 8.3 U | 8.6 U |
| Heptachlor Epoxide | 8 | 8.4 U | 8.5 U | 8.2 U | 8.4 U | 9 U | 8.9 U | 8.3 U | 8.6 U |
| Endosulfan I | 8 | 8.4 U | 8.5 U | 8.2 U | 8.4 U | 9 U | 8.9 U | 8.3 U | 8.6 U |
| Dieldrin | 16 | 17 U | 17 U | 16 U | 17 U | 18 U | 18 U | 17 U | 17 U |
| 4,4'-DDE | 16 | 18 J | 17 U | 16 U | 17 U | 49 J | 20 J | 17 U | 17 U |
| Endrin | 16 | 17 U | 17 U | 16 U | 17 U | 18 U | 18 U | 17 U | 17 U |
| Endosulfan II | 16 | 17 U | 17 U | 16 U | 17 U | 18 U | 18 U | 17 U | 17 U |
| 4,4'-DDD | 16 | 17 U | 17 U | 16 U | 17 U | 18 U | 18 U | 17 U | 17 U |
| Endosulfan Sulfate | 16 | 17 U | 17 U | 16 U | 17 U | 18 U | 18 U | 17 U | 17 U |
| 4,4'-DDT | 16 | 19 | 21 | 16 U | 17 U | 44 J | 18 UJ | 17 U | 17 U |
| Methoxychlor | 80 | 84 U | 85 U | 82 U | 84 U | 90 U | 89 U | 83 U | 86 U |
| Endrin Ketone | 16 | 17 U | 17 U | 16 U | 17 U | 18 U | 18 U | 17 U | 17 U |
| alpha-Chlordane | 80 | 84 U | 85 U | 82 U | 84 U | 90 U | 89 U | 83 U | 86 U |
| gamma-Chlordane | 80 | 84 U | 85 U | 82 U | 84 U | 90 U | 89 U | 83 U | 86 U |
| Toxaphene | 160 | 170 U | 170 U | 160 U | 170 U | 180 U | 180 U | 170 U | 170 U |
| Aroclor-1016 | 80 | 84 U | 85 U | 82 U | 84 U | 90 U | 89 U | 83 U | 86 U |
| Aroclor-1221 | 80 | 84 U | 85 U | 82 U | 84 U | 90 U | 89 U | 83 U | 86 U |
| Aroclor-1232 | 80 | 84 U | 85 U | 82 U | 84 U | 90 U | 89 U | 83 U | 86 U |
| Aroclor-1242 | 80 | 84 U | 85 U | 82 U | 84 U | 90 U | 89 U | 83 U | 86 U |
| Aroclor-1248 | 80 | 84 U | 85 U | 82 U | 84 U | 90 U | 89 U | 83 U | 86 U |
| Aroclor-1254 | 160 | 170 U | 170 U | 160 U | 170 U | 180 U | 180 U | 170 U | 170 U |
| Aroclor-1260 | 160 | 170 U | 170 U | 160 U | 170 U | 180 U | 180 U | 170 U | 170 U |
| Dilution Factor: | | 1.0 | 1.0 | 1.0 | 1.0 | 1.0 | 1.0 | 1.0 | 1.0 |
| Percent Solids: | | 94 | 94 | 97 | 94 | 88 | 89 | 96 | 92 |
| Associated Method Blank: | | 370731 | 370856 | 370731 | 370731 | 370731 | 370731 | 370731 | 370731 |
| Associated Equipment Blank: | | - | - | - | - | - | - | - | - |
| Associated Field Blank: | | - | - | - | - | - | - | - | - |

Table 2
Validation / Summary Table

| SAMPLE LOCATION: | 09PS905X0101XD | 09PS905X0101XX | 09PS905X0301XX | 09PS905X0601XX | 09PS906X0101XX | 09PS906X0301XX | 09PS906X0601XX | 09PS907X0201XX |
|---|---|---|---|---|---|---|---|---|
| LAB NUMBER: | 370445 | 370442 | 370444 | 370443 | 370451 | 370441 | 370452 | 370450 |
| DATE SAMPLED: | 09/18/90 | 09/18/90 | 09/18/90 | 09/18/90 | 09/19/90 | 09/19/90 | 09/19/90 | 09/19/90 |
| DATE EXTRACTED: | 09/21/90 | 09/21/90 | 09/21/90 | 09/21/90 | 09/21/90 | 09/21/90 | 09/21/90 | 09/21/90 |
| DATE ANALYZED: | 09/25/90 | 09/25/90 | 09/25/90 | 09/25/90 | 09/27/90 | 09/25/90 | 09/27/90 | 09/27/90 |
| ANALYTE / CRQL | | | | | | | | |
| alpha-BHC 8 | 8.3 U | 8.3 U | 8.1 U | 8.6 U | 8.5 U | 8.2 U | 8.7 U | 8.5 U |
| beta-BHC 8 | 8.3 U | 8.3 U | 8.1 U | 8.6 U | 8.5 U | 8.2 U | 8.7 U | 8.5 U |
| delta-BHC 8 | 8.3 U | 8.3 U | 8.1 U | 8.6 U | 8.5 U | 8.2 U | 8.7 U | 8.5 U |
| gamma-BHC (Lindane) 8 | 8.3 U | 8.3 U | 8.1 U | 8.6 U | 8.5 U | 8.2 U | 8.7 U | 8.5 U |
| Heptachlor 8 | 8.3 U | 8.3 U | 8.1 U | 8.6 U | 8.5 U | 8.2 U | 8.7 U | 8.5 U |
| Aldrin 8 | 8.3 U | 8.3 U | 8.1 U | 8.6 U | 8.5 U | 8.2 U | 8.7 U | 8.5 U |
| Heptachlor Epoxide 8 | 8.3 U | 8.3 U | 8.1 U | 8.6 U | 8.5 U | 8.2 U | 8.7 U | 8.5 U |
| Endosulfan I 8 | 8.3 U | 8.3 U | 8.1 U | 8.6 U | 8.5 U | 8.2 U | 8.7 U | 8.5 U |
| Dieldrin 16 | 17 U | 17 U | 16 U | 17 U | 17 U | 16 U | 17 U | 17 U |
| 4,4'-DDE 16 | 17 U | 17 U | 16 U | 17 U | 17 U | 16 U | 17 U | 35 |
| Endrin 16 | 17 U | 17 U | 16 U | 17 U | 17 U | 16 U | 17 U | 17 U |
| Endosulfan II 16 | 17 U | 17 U | 16 U | 17 U | 17 U | 16 U | 17 U | 17 U |
| 4,4'-DDD 16 | 17 U | 17 U | 16 U | 17 U | 17 U | 16 U | 17 U | 17 U |
| Endosulfan Sulfate 16 | 17 U | 17 U | 16 U | 17 U | 17 U | 16 U | 17 U | 17 U |
| 4,4'-DDT 16 | 17 U | 17 U | 16 U | 17 U | 17 U | 16 U | 17 U | 31 |
| Methoxychlor 80 | 83 U | 83 U | 81 U | 86 U | 85 U | 82 U | 87 U | 85 U |
| Endrin Ketone 16 | 17 U | 17 U | 16 U | 17 U | 17 U | 16 U | 17 U | 17 U |
| alpha-Chlordane 80 | 83 U | 83 U | 81 U | 86 U | 85 U | 82 U | 87 U | 85 U |
| gamma-Chlordane 80 | 83 U | 83 U | 81 U | 86 U | 85 U | 82 U | 87 U | 85 U |
| Toxaphene 160 | 170 U | 170 U | 160 U | 170 U | 170 U | 160 U | 170 U | 170 U |
| Aroclor-1016 80 | 83 U | 83 U | 81 U | 86 U | 85 U | 82 U | 87 U | 85 U |
| Aroclor-1221 80 | 83 U | 83 U | 81 U | 86 U | 85 U | 82 U | 87 U | 85 U |
| Aroclor-1232 80 | 83 U | 83 U | 81 U | 86 U | 85 U | 82 U | 87 U | 85 U |
| Aroclor-1242 80 | 83 U | 83 U | 81 U | 86 U | 85 U | 82 U | 87 U | 85 U |
| Aroclor-1248 80 | 83 U | 83 U | 81 U | 86 U | 85 U | 82 U | 87 U | 85 U |
| Aroclor-1254 160 | 170 U | 170 U | 160 U | 170 U | 170 U | 160 U | 170 U | 170 U |
| Aroclor-1260 160 | 170 U | 170 U | 160 U | 170 U | 170 U | 160 U | 170 U | 170 U |
| Dilution Factor: | 1.0 | 1.0 | 1.0 | 1.0 | 1.0 | 1.0 | 1.0 | 1.0 |
| Percent Solids: | 94 | 94 | 97 | 91 | 94 | 96 | 91 | 93 |
| Associated Method Blank: | 370859 | 370859 | 370859 | 370859 | 370860 | 370859 | 370860 | 370860 |
| Associated Equipment Blank: | - | - | - | - | - | - | - | - |
| Associated Field Blank: | - | - | - | - | - | - | - | - |

Table 2
Validation / Summary Table

| SAMPLE LOCATION: | 09PS907X0401XX | 09PS907X0701XX | 09PS908X0101XX | 09PS908X0301XX | 09PS908X0801XX | 09PS909X0101XX | 09PS909X0301XX | 09PS909X0601XX |
|---|---|---|---|---|---|---|---|---|
| LAB NUMBER: | 370446 | 370448 | 370907 | 370922 | 370909 | 370447 | 370449 | 370453 |
| DATE SAMPLED: | 09/19/90 | 09/19/90 | 09/19/90 | 09/19/90 | 09/19/90 | 09/19/90 | 09/19/90 | 09/19/90 |
| DATE EXTRACTED: | 09/21/90 | 09/21/90 | 09/22/90 | 09/22/90 | 09/22/90 | 09/21/90 | 09/21/90 | 09/21/90 |
| DATE ANALYZED: | 09/25/90 | 09/25/90 | 09/25/90 | 09/25/90 | 09/25/90 | 09/25/90 | 09/27/90 | 09/27/90 |
| ANALYTE / CRQL | | | | | | | | |
| alpha-BHC 8 | 8.9 U | 10 U | 8.2 U | 8.1 U | 10 U | 8.3 U | 8.5 U | 10 U |
| beta-BHC 8 | 8.9 U | 10 U | 8.2 U | 8.1 U | 10 U | 8.3 U | 8.5 U | 10 U |
| delta-BHC 8 | 8.9 U | 10 U | 8.2 U | 8.1 U | 10 U | 8.3 U | 8.5 U | 10 U |
| gamma-BHC (Lindane) 8 | 8.9 U | 10 U | 8.2 U | 8.1 U | 10 U | 8.3 U | 8.5 U | 10 U |
| Heptachlor 8 | 8.9 U | 10 U | 8.2 U | 8.1 U | 10 U | 8.3 U | 8.5 U | 10 U |
| Aldrin 8 | 8.9 U | 10 U | 8.2 U | 8.1 U | 10 U | 8.3 U | 8.5 U | 10 U |
| Heptachlor Epoxide 8 | 8.9 U | 10 U | 8.2 U | 8.1 U | 10 U | 8.3 U | 8.5 U | 10 U |
| Endosulfan I 8 | 8.9 U | 10 U | 8.2 U | 8.1 U | 10 U | 8.3 U | 8.5 U | 10 U |
| Dieldrin 16 | 18 U | 20 U | 16 U | 16 U | 20 U | 17 U | 17 U | 20 U |
| 4,4'-DDE 16 | 18 U | 20 U | 16 U | 16 U | 20 U | 17 U | 17 U | 20 U |
| Endrin 16 | 18 U | 20 U | 16 U | 16 U | 20 U | 17 U | 17 U | 20 U |
| Endosulfan II 16 | 18 U | 20 U | 16 U | 16 U | 20 U | 17 U | 17 U | 20 U |
| 4,4'-DDD 16 | 18 U | 20 U | 16 U | 16 U | 20 U | 17 U | 17 U | 20 U |
| Endosulfan Sulfate 16 | 18 U | 20 U | 16 U | 16 U | 20 U | 17 U | 17 U | 20 U |
| 4,4'-DDT 16 | 28 | 20 U | 16 U | 16 U | 20 U | 17 U | 17 U | 20 U |
| Methoxychlor 80 | 89 U | 100 U | 82 U | 81 U | 100 U | 83 U | 85 U | 100 U |
| Endrin Ketone 16 | 18 U | 20 U | 16 U | 16 U | 20 U | 17 U | 17 U | 20 U |
| alpha-Chlordane 80 | 89 U | 100 U | 82 U | 81 U | 100 U | 83 U | 85 U | 100 U |
| gamma-Chlordane 80 | 89 U | 100 U | 82 U | 81 U | 100 U | 83 U | 85 U | 100 U |
| Toxaphene 160 | 180 U | 200 U | 160 U | 160 U | 200 U | 170 U | 170 U | 200 U |
| Aroclor-1016 80 | 89 U | 100 U | 82 U | 81 U | 100 U | 83 U | 85 U | 100 U |
| Aroclor-1221 80 | 89 U | 100 U | 82 U | 81 U | 100 U | 83 U | 85 U | 100 U |
| Aroclor-1232 80 | 89 U | 100 U | 82 U | 81 U | 100 U | 83 U | 85 U | 100 U |
| Aroclor-1242 80 | 89 U | 100 U | 82 U | 81 U | 100 U | 83 U | 85 U | 100 U |
| Aroclor-1248 80 | 89 U | 100 U | 82 U | 81 U | 100 U | 83 U | 85 U | 100 U |
| Aroclor-1254 160 | 180 U | 200 U | 160 U | 160 U | 200 U | 170 U | 170 U | 200 U |
| Aroclor-1260 160 | 180 U | 200 U | 160 U | 160 U | 200 U | 170 U | 170 U | 200 U |
| Dilution Factor: | 1.0 | 1.0 | 1.0 | 1.0 | 1.0 | 1.0 | 1.0 | 1.0 |
| Percent Solids: | 90 | 78 | 98 | 98 | 79 | 95 | 93 | 77 |
| Associated Method Blank: | 370860 | 370860 | 371048 | 371047 | 371048 | 370860 | 370860 | 370860 |
| Associated Equipment Blank: | - | - | - | - | - | - | - | - |
| Associated Field Blank: | - | - | - | - | - | - | - | - |

Table 2
Validation / Summary Table

| SAMPLE LOCATION: | | 09PS910X0201XX | 09PS910X0401XX | 09PS910X0701XX | 09PS911X0201XX | 09PS911X0401XX | 09PS911X0801XX |
|---|---|---|---|---|---|---|---|
| LAB NUMBER: | | 370934 | 370913 | 370927 | 370932 | 370936 | 370938 |
| DATE SAMPLED: | | 09/19/90 | 09/19/90 | 09/19/90 | 09/19/90 | 09/19/90 | 09/19/90 |
| DATE EXTRACTED: | | 09/22/90 | 09/22/90 | 09/22/90 | 09/22/90 | 09/22/90 | 09/22/90 |
| DATE ANALYZED: | | 10/04/90 | 09/26/90 | 09/25/90 | 10/04/90 | 10/04/90 | 09/25/90 |
| ANALYTE | CRQL | | | | | | |
| alpha-BHC | 8 | 8.7 U | 8.6 U | 8.5 U | 8.3 U | 8.6 U | 8.9 U |
| beta-BHC | 8 | 8.7 U | 8.6 U | 8.5 U | 8.3 U | 8.6 U | 8.9 U |
| delta-BHC | 8 | 8.7 U | 8.6 U | 8.5 U | 8.3 U | 8.6 U | 8.9 U |
| gamma-BHC (Lindane) | 8 | 8.7 U | 8.6 U | 8.5 U | 8.3 U | 8.6 U | 8.9 U |
| Heptachlor | 8 | 8.7 U | 8.6 U | 8.5 U | 8.3 U | 8.6 U | 8.9 U |
| Aldrin | 8 | 8.7 U | 8.6 U | 8.5 U | 8.3 U | 8.6 U | 8.9 U |
| Heptachlor Epoxide | 8 | 8.7 U | 8.6 U | 8.5 U | 8.3 U | 8.6 U | 8.9 U |
| Endosulfan I | 8 | 8.7 U | 8.6 U | 8.5 U | 8.3 U | 8.6 U | 8.9 U |
| Dieldrin | 16 | 17 U | 17 U | 17 U | 17 U | 17 U | 18 U |
| 4,4'-DDE | 16 | 17 U | 17 U | 17 U | 17 U | 20 | 18 U |
| Endrin | 16 | 17 U | 17 U | 17 U | 17 U | 17 U | 18 U |
| Endosulfan II | 16 | 17 U | 17 U | 17 U | 17 U | 17 U | 18 U |
| 4,4'-DDD | 16 | 17 U | 17 U | 17 U | 17 U | 17 U | 18 U |
| Endosulfan Sulfate | 16 | 17 U | 17 U | 17 U | 17 U | 17 U | 18 U |
| 4,4'-DDT | 16 | 17 U | 17 U | 17 U | 29 | 21 | 18 U |
| Methoxychlor | 80 | 87 U | 86 U | 85 U | 83 U | 86 U | 89 U |
| Endrin Ketone | 16 | 17 U | 17 U | 17 U | 17 U | 17 U | 18 U |
| alpha-Chlordane | 80 | 87 U | 86 U | 85 U | 83 U | 86 U | 89 U |
| gamma-Chlordane | 80 | 87 U | 86 U | 85 U | 83 U | 86 U | 89 U |
| Toxaphene | 160 | 170 U | 170 U | 170 U | 170 U | 170 U | 180 U |
| Aroclor-1016 | 80 | 87 U | 86 U | 85 U | 83 U | 86 U | 89 U |
| Aroclor-1221 | 80 | 87 U | 86 U | 85 U | 83 U | 86 U | 89 U |
| Aroclor-1232 | 80 | 87 U | 86 U | 85 U | 83 U | 86 U | 89 U |
| Aroclor-1242 | 80 | 87 U | 86 U | 85 U | 83 U | 86 U | 89 U |
| Aroclor-1248 | 80 | 87 U | 86 U | 85 U | 83 U | 86 U | 89 U |
| Aroclor-1254 | 160 | 170 U | 170 U | 170 U | 170 U | 170 U | 180 U |
| Aroclor-1260 | 160 | 170 U | 170 U | 170 U | 170 U | 170 U | 180 U |
| Dilution Factor: | | 1.0 | 1.0 | 1.0 | 1.0 | 1.0 | 1.0 |
| Percent Solids: | | 91 | 93 | 92 | 95 | 92 | 88 |
| Associated Method Blank: | | 371047 | 371048 | 371047 | 371047 | 371047 | 371047 |
| Associated Equipment Blank: | | - | - | - | - | - | - |
| Associated Field Blank: | | - | - | - | - | - | - |

M-70

PROJECT: Naval Air Station Brunswick - Round 5 Inorganic Soil Analysis (mg/kg) 03/14/91

Table 2
Validation / Summary Table

| SAMPLE LOCATION: | 09PS903X0101XX | 09PS905X0101XD | 09PS905X0101XX | 09PS905X0301XX | 09PS905X0601XX | 09PS906X0101XX | 09PS906X0301XX | 09PS906X0601XX |
|---|---|---|---|---|---|---|---|---|
| LAB NUMBER: | 370577 | 370551 | 370547 | 370550 | 370549 | 370564 | 370544 | 370567 |
| DATE SAMPLED: | 09/18/90 | 09/18/90 | 09/18/90 | 09/18/90 | 09/18/90 | 09/19/90 | 09/19/90 | 09/19/90 |
| ANALYTE / CRQL | | | | | | | | |
| Aluminum 40 | 7610 | 8700 | 7960 | 5510 | 8280 | 6480 | 7240 | 6390 |
| Antimony 12 | 6.4 UJ | 6.3 UJ | 6.4 UJ | 6.2 UJ | 6.6 UJ | 6.2 UJ | 6.2 UJ | 6.5 UJ |
| Arsenic 2 | 2.1 U | 1.4 [] | 1.5 []J | 1.2 [] | 0.57 [] | 1.5 [] | 1.4 []J | 1.1 [] |
| Barium 40 | 15.0 [] | 8.6 [] | 8.5 [] | 9.2 [] | 35.3 [] | 13.3 [] | 22.3 [] | 23.1 [] |
| Beryllium 1 | 0.43 [] | 0.41 [] | 0.39 [] | 0.28 [] | 0.37 [] | 0.35 [] | 0.36 [] | 0.31 [] |
| Cadmium 1 | 0.64 U | 0.63 U | 0.64 U | 0.62 U | 0.66 U | 0.62 U | 0.62 U | 0.65 U |
| Calcium 1000 | 685 []J | 286 []J | 266 []J | 369 []J | 1170 J | 336 []J | 575 []J | 1150 J |
| Chromium 2 | 10.4 | 8.8 | 8.2 | 6.7 | 14.6 | 7.0 | 11.2 | 10.9 |
| Cobalt 10 | 5.0 [] | 3.4 [] | 4.0 [] | 4.1 [] | 6.5 [] | 2.6 [] | 6.4 [] | 5.4 [] |
| Copper 5 | 7.7 U | 4.2 U | 3.8 U | 4.5 U | 10.0 | 3.2 U | 7.6 U | 6.8 U |
| Iron 20 | 8720 | 8360 | 7970 | 6400 | 10700 | 8110 | 9860 | 9830 |
| Lead 0.6 | 4.8 J | 4.1 J | 3.6 J | 2.9 J | 3.9 J | 4.9 J | 1.1 J | 2.4 J |
| Magnesium 1000 | 1950 | 1350 | 1350 | 1560 | 3820 | 697 [] | 2900 | 2770 |
| Manganese 3 | 111 | 69.0 | 70.8 | 80.3 | 150 | 93.5 | 201 | 118 |
| Mercury 0.1 | 0.11 U | 0.11 U | 0.11 U | 0.10 U | 0.11 U | 0.11 U | 0.10 U | 0.11 U |
| Nickel 8 | 7.7 [] | 6.4 [] | 6.4 [] | 6.5 [] | 10.7 | 3.0 [] | 10.2 | 7.7 [] |
| Potassium 1000 | 825 [] | 389 [] | 384 [] | 569 [] | 2110 | 301 [] | 1520 | 1330 |
| Selenium 1 | 3.2 UR | 3.2 UR | 3.2 UR | 0.62 UR | 0.66 UR | 0.63 UR | 0.62 UR | 0.64 UR |
| Silver 2 | 1.5 U | 1.5 U | 1.5 U | 1.4 U | 1.5 U | 1.4 U | 1.5 U | 1.5 U |
| Sodium 1000 | 137 [] | 114 [] | 110 [] | 115 [] | 144 [] | 114 [] | 126 [] | 148 [] |
| Thallium 2 | 0.42 U | 0.42 U | 0.42 U | 0.41 U | 0.44 U | 0.42 UJ | 0.42 U | 0.42 U |
| Vanadium 10 | 14.9 | 13.8 | 12.8 | 10.8 | 21.2 | 14.3 | 17.0 | 18.2 |
| Zinc 4 | 21.1 | 15.6 | 15.1 | 14.6 | 30.3 | 11.6 | 23.2 | 21.4 |
| Cyanide 1 | 0.53 U | 0.53 U | 0.53 U | 0.51 U | 0.55 U | 0.53 U | 0.52 U | 0.54 U |
| Percent Solids: | 94 | 94 | 94 | 97 | 91 | 94 | 96 | 92 |
| Associated Method Blank: | BR18551S | BR18551S | BR18551S | BR18551S | BR18551S | BR18551S | BR18551S | BR18551S |
| Associated Equipment Blank: | - | - | - | - | - | - | - | - |
| Associated Field Blank: | - | - | - | - | - | - | - | - |

Table 2
Validation / Summary Table

SAMPLE LOCATION: 09PS903X0601XX
LAB NUMBER: 370465
DATE SAMPLED: 09/18/90

| ANALYTE | CRQL | | |
|---|---|---|---|
| Aluminum | 40 | 6470 | |
| Antimony | 12 | 6.2 | UJ |
| Arsenic | 2 | 1.9 | [] |
| Barium | 40 | 22.0 | [] |
| Beryllium | 1 | 0.29 | U |
| Cadmium | 1 | 0.62 | U |
| Calcium | 1000 | 991 | [] |
| Chromium | 2 | 10.5 | J |
| Cobalt | 10 | 5.8 | U |
| Copper | 5 | 8.0 | |
| Iron | 20 | 9590 | |
| Lead | 0.6 | 2.3 | J |
| Magnesium | 1000 | 2710 | |
| Manganese | 3 | 231 | |
| Mercury | 0.1 | 0.11 | UJ |
| Nickel | 8 | 9.4 | |
| Potassium | 1000 | 1440 | |
| Selenium | 1 | 0.63 | UJ |
| Silver | 2 | 1.5 | U |
| Sodium | 1000 | 142 | [] |
| Thallium | 2 | 1.7 | UR |
| Vanadium | 10 | 16.9 | |
| Zinc | 4 | 23.7 | J |
| Cyanide | 1 | 0.53 | U |
| Percent Solids: | | 94 | |

Associated Method Blank: BR18551S2
Associated Equipment Blank: -
Associated Field Blank: -

Table 2
Validation / Summary Table

| SAMPLE LOCATION: | 09PS903X0101XD | 09PS903X0201XX | 09PS904X0101XD | 09PS904X0101XX | 09PS904X0301XX | 09PS904X0701XX | 09PS907X0201XX | 09PS907X0401XX |
|---|---|---|---|---|---|---|---|---|
| LAB NUMBER: | 370487 | 370482 | 370476 | 370478 | 370480 | 370474 | 370562 | 370553 |
| DATE SAMPLED: | 09/18/90 | 09/18/90 | 09/18/90 | 09/18/90 | 09/18/90 | 09/18/90 | 09/19/90 | 09/19/90 |
| ANALYTE / CRQL | | | | | | | | |
| Aluminum 40 | 8020 J | 8150 J | 7630 J | 7200 J | 6450 J | 9100 J | 6790 | 7320 |
| Antimony 12 | 6.4 UJ | 6.2 UJ | 6.8 UJ | 6.7 UJ | 6.2 UJ | 6.5 UJ | 6.5 UJ | 6.5 UJ |
| Arsenic 2 | 1.9 U | 3.3 | 2.0 U | 1.7 U | 2.0 U | 2.0 U | 1.5 [] | 1.5 [] |
| Barium 40 | 16.1 [] | 9.9 [] | 18.5 [] | 16.9 [] | 12.3 [] | 33.9 [] | 12.9 [] | 24.5 [] |
| Beryllium 1 | 0.41 [] | 0.39 [] | 0.35 [] | 0.61 [] | 0.36 [] | 0.45 [] | 0.33 [] | 0.34 [] |
| Cadmium 1 | 0.64 U | 0.62 U | 0.68 U | 0.67 U | 0.62 U | 0.65 U | 0.65 U | 0.65 U |
| Calcium 1000 | 739 [] | 523 [] | 1520 | 1290 | 593 [] | 976 [] | 420 []J | 1030 []J |
| Chromium 2 | 10.5 | 8.7 | 8.3 | 7.9 | 8.8 | 16.7 | 6.9 | 8.2 |
| Cobalt 10 | 4.7 [] | 3.7 [] | 2.5 [] | 2.6 [] | 4.0 [] | 7.4 [] | 4.0 [] | 3.4 [] |
| Copper 5 | 7.0 UJ | 4.2 UJ | 7.1 UJ | 5.4 UJ | 5.0 UJ | 10.3 J | 5.1 U | 3.6 U |
| Iron 20 | 9060 | 8040 | 7490 | 7420 | 7790 | 13000 | 6910 | 9050 |
| Lead 0.6 | 11.0 J | 4.9 J | 20.2 J | 11.4 J | 3.0 J | 3.3 J | 6.7 J | 8.5 J |
| Magnesium 1000 | 2060 | 1460 | 1170 | 1110 [] | 1910 | 4050 | 1250 | 2610 |
| Manganese 3 | 122 | 76.7 | 107 | 100 | 116 | 258 | 147 | 139 |
| Mercury 0.1 | 0.11 UJ | 0.10 UJ | 0.11 UJ | 0.11 UJ | 0.10 UJ | 0.11 UJ | 0.11 U | 0.11 U |
| Nickel 8 | 8.1 [] | 7.6 [] | 5.2 [] | 5.6 [] | 7.4 [] | 13.5 | 5.6 [] | 4.3 [] |
| Potassium 1000 | 992 [] | 554 [] | 395 [] | 458 [] | 782 [] | 2180 | 492 [] | 381 [] |
| Selenium 1 | 0.64 UJ | 0.62 UJ | 0.68 UJ | 0.67 UJ | 0.62 UJ | 0.65 UJ | 3.2 UR | 0.65 UR |
| Silver 2 | 1.5 U | 1.4 U | 1.6 U | 1.6 U | 1.5 U | 1.5 U | 1.5 U | 1.5 U |
| Sodium 1000 | 152 [] | 147 [] | 156 [] | 137 [] | 139 [] | 176 [] | 119 [] | 126 [] |
| Thallium 2 | 0.43 U | 0.41 U | 0.45 U | 0.45 U | 0.42 U | 0.43 U | 0.43 U | 0.44 U |
| Vanadium 10 | 16.9 | 12.7 | 14.4 | 12.3 | 13.4 | 23.5 | 11.6 | 16.4 |
| Zinc 4 | 23.3 | 13.9 | 19.5 | 17.4 | 15.6 | 29.6 | 15.1 | 14.3 |
| Cyanide 1 | 0.53 U | 0.51 U | 0.57 U | 0.56 U | 0.52 U | 0.54 U | 0.54 U | 0.56 U |
| Percent Solids: | 94 | 97 | 88 | 89 | 96 | 92 | 93 | 90 |
| Associated Method Blank: | BN135888S | BN135888S | BN135888S | BN135888S | BN135888S | BN135888S | BR18551S | BR18551S |
| Associated Equipment Blank: | - | - | - | - | - | - | - | - |
| Associated Field Blank: | - | - | - | - | - | - | - | - |

Table 2
Validation / Summary Table

| SAMPLE LOCATION: | 09PS907X0701XX | | 09PS908X0101XX | | 09PS908X0301XX | | 09PS909X0101XX | | 09PS909X0301XX | | 09PS909X0601XX | |
|---|---|---|---|---|---|---|---|---|---|---|---|---|
| LAB NUMBER: | 370560 | | 370908 | | 370924 | | 370559 | | 370561 | | 370572 | |
| DATE SAMPLED: | 09/19/90 | | 09/19/90 | | 09/19/90 | | 09/19/90 | | 09/19/90 | | 09/19/90 | |
| ANALYTE | CRQL | | | | | | | | | | | |
| Aluminum | 40 | 9050 | | 5670 | J | 6570 | J | 7760 | | 8330 | | 9440 | |
| Antimony | 12 | 7.6 | UJ | 6.1 | UJ | 6.1 | UJ | 6.2 | UJ | 6.3 | UJ | 7.7 | UJ |
| Arsenic | 2 | 1.1 | [] | 1.7 | U | 2.2 | | 1.5 | [] | 6.6 | J | 1.1 | [] |
| Barium | 40 | 32.9 | [] | 9.0 | [] | 20.8 | [] | 12.0 | [] | 25.0 | [] | 39.4 | [] |
| Beryllium | 1 | 0.40 | [] | 0.31 | [] | 0.35 | [] | 0.48 | [] | 0.47 | [] | 0.48 | [] |
| Cadmium | 1 | 0.76 | U | 0.61 | U | 0.61 | U | 0.62 | U | 0.63 | U | 0.77 | U |
| Calcium | 1000 | 1110 | []J | 488 | [] | 480 | [] | 285 | []J | 584 | []J | 1140 | []J |
| Chromium | 2 | 16.2 | | 6.7 | | 10.0 | | 8.6 | | 15.1 | | 17.5 | |
| Cobalt | 10 | 7.8 | [] | 3.8 | [] | 4.4 | [] | 4.3 | [] | 8.0 | [] | 6.7 | [] |
| Copper | 5 | 11.9 | | 3.7 | UJ | 6.2 | UJ | 3.1 | U | 9.8 | | 10.4 | U |
| Iron | 20 | 11700 | | 6450 | | 10200 | | 8150 | | 15900 | | 12000 | |
| Lead | 0.6 | 3.5 | J | 2.9 | J | 3.0 | J | 3.6 | J | 3.1 | J | 4.6 | J |
| Magnesium | 1000 | 4170 | | 1420 | | 2870 | | 1260 | | 3410 | | 4320 | |
| Manganese | 3 | 168 | | 87.7 | | 139 | | 111 | | 208 | | 158 | |
| Mercury | 0.1 | 0.13 | U | 0.10 | UJ | 0.10 | UJ | 0.10 | U | 0.11 | U | 0.13 | U |
| Nickel | 8 | 13.6 | | 7.0 | [] | 9.4 | | 5.6 | [] | 10.8 | | 13.1 | |
| Potassium | 1000 | 2220 | | 593 | [] | 1670 | | 364 | [] | 1570 | | 2450 | |
| Selenium | 1 | 0.75 | UR | 0.61 | UJ | 0.61 | UJ | 3.1 | UR | 0.64 | UR | 0.76 | UR |
| Silver | 2 | 1.8 | U | 1.4 | U | 1.4 | U | 1.5 | U | 1.5 | U | 1.8 | U |
| Sodium | 1000 | 222 | [] | 134 | [] | 142 | [] | 118 | [] | 137 | [] | 179 | [] |
| Thallium | 2 | 0.50 | U | 0.41 | U | 0.41 | U | 0.42 | U | 0.43 | UJ | 0.51 | UJ |
| Vanadium | 10 | 23.3 | | 9.9 | [] | 15.3 | | 14.1 | | 23.0 | | 24.7 | |
| Zinc | 4 | 34.5 | | 13.2 | | 23.2 | | 15.5 | | 25.5 | | 33.2 | |
| Cyanide | 1 | 0.64 | U | 0.51 | U | 0.51 | U | 0.52 | U | 0.54 | U | 0.65 | U |
| Percent Solids: | | 78 | | 98 | | 98 | | 95 | | 93 | | 77 | |
| Associated Method Blank: | | BR18551S | | BN135888S | | BN135888S | | BR18551S | | BR18551S | | BR18551S | |
| Associated Equipment Blank: | | - | | - | | - | | - | | - | | - | |
| Associated Field Blank: | | - | | - | | - | | - | | - | | - | |

PROJECT: Naval Air Station Brunswick - Round 5 Inorganic Soil Analysis (mg/kg) 03/14/91

Table 2
Validation / Summary Table

| SAMPLE LOCATION: | 09PS908X0801XX | | 09PS910X0201XX | | 09PS910X0401XX | | 09PS910X0701XX | | 09PS911X0201XX | | 09PS911X0401XX | | 09PS911X0801XX | |
|---|---|---|---|---|---|---|---|---|---|---|---|---|---|---|
| LAB NUMBER: | 370911 | | 370935 | | 370920 | | 370929 | | 370933 | | 370937 | | 370939 | |
| DATE SAMPLED: | 09/19/90 | | 09/19/90 | | 09/19/90 | | 09/19/90 | | 09/19/90 | | 09/19/90 | | 09/19/90 | |
| ANALYTE | CRQL | | | | | | | | | | | | | |
| Aluminum | 40 | 6820 | J | 8310 | J | 10200 | J | 6890 | J | 8300 | J | 8750 | J | 10200 | J |
| Antimony | 12 | 7.6 | UJ | 6.6 | UJ | 6.4 | UJ | 6.5 | UJ | 6.3 | UJ | 6.5 | UJ | 6.8 | UJ |
| Arsenic | 2 | 1.2 | U | 1.8 | U | 1.5 | U | 1.7 | UJ | 1.6 | U | 1.3 | UJ | 1.8 | U |
| Barium | 40 | 24.4 | [] | 14.4 | [] | 19.0 | [] | 21.3 | [] | 12.6 | [] | 15.2 | [] | 36.6 | [] |
| Beryllium | 1 | 0.31 | [] | 0.44 | [] | 0.49 | [] | 0.44 | [] | 0.42 | [] | 0.39 | [] | 0.51 | [] |
| Cadmium | 1 | 0.76 | U | 0.66 | U | 0.64 | U | 0.65 | U | 0.63 | U | 0.65 | U | 0.68 | U |
| Calcium | 1000 | 1280 | | 759 | [] | 616 | [] | 1020 | [] | 892 | [] | 711 | [] | 1420 | |
| Chromium | 2 | 12.9 | | 8.7 | | 14.0 | | 11.1 | | 9.0 | | 9.2 | | 15.8 | |
| Cobalt | 10 | 5.6 | [] | 4.3 | [] | 6.4 | [] | 5.5 | [] | 4.6 | [] | 3.4 | [] | 8.2 | [] |
| Copper | 5 | 10.4 | J | 5.7 | UJ | 9.1 | J | 9.1 | J | 5.8 | UJ | 5.4 | UJ | 11.8 | J |
| Iron | 20 | 9490 | | 8390 | | 11300 | | 10400 | | 8860 | | 8830 | | 13200 | |
| Lead | 0.6 | 2.5 | J | 8.8 | J | 4.9 | J | 2.7 | J | 3.6 | J | 3.8 | J | 3.7 | J |
| Magnesium | 1000 | 2970 | | 1600 | | 3020 | | 2820 | | 1810 | | 1690 | | 3990 | |
| Manganese | 3 | 136 | | 116 | | 125 | | 247 | | 104 | | 89.1 | | 225 | |
| Mercury | 0.1 | 0.13 | UJ | 0.11 | UJ | 0.11 | UJ | 0.11 | UJ | 0.11 | UJ | 0.11 | UJ | 0.11 | UJ |
| Nickel | 8 | 10.6 | | 8.2 | [] | 11.5 | | 9.5 | | 7.7 | [] | 6.3 | [] | 14.0 | |
| Potassium | 1000 | 1590 | | 602 | [] | 988 | [] | 1270 | | 828 | [] | 900 | [] | 2150 | |
| Selenium | 1 | 0.76 | UJ | 0.66 | UJ | 0.64 | UJ | 0.65 | UJ | 0.63 | UJ | 0.65 | UJ | 0.68 | UJ |
| Silver | 2 | 1.8 | U | 1.5 | U | 1.5 | U | 1.5 | U | 1.5 | U | 1.5 | U | 1.6 | U |
| Sodium | 1000 | 191 | [] | 145 | [] | 155 | [] | 169 | [] | 165 | [] | 148 | [] | 204 | [] |
| Thallium | 2 | 0.51 | U | 0.44 | U | 0.43 | U | 0.44 | U | 0.42 | U | 0.43 | U | 0.46 | U |
| Vanadium | 10 | 18.4 | | 14.8 | | 20.7 | | 17.9 | | 15.3 | | 16.2 | | 24.7 | |
| Zinc | 4 | 25.0 | | 16.8 | | 23.5 | | 22.0 | | 18.8 | | 15.2 | | 28.9 | |
| Cyanide | 1 | 0.63 | U | 0.55 | U | 0.53 | U | 0.54 | U | 0.53 | U | 0.54 | U | 0.57 | U |
| Percent Solids: | | 79 | | 91 | | 93 | | 92 | | 95 | | 92 | | 88 | |
| Associated Method Blank: | | BN135888S | | BN135888S | | BN135888S | | BN135888S | | BN135888S | | BN135888S | | BN135888S | |
| Associated Equipment Blank: | | - | | - | | - | | - | | - | | - | | - | |
| Associated Field Blank: | | - | | - | | - | | - | | - | | - | | - | |

M-75

Table 2
Validation / Summary Table

| SAMPLE LOCATION: | 11MS304X2201XD | 11MS304X2201XX | 11MS304X3401XX | 11MS304X3801XX | 11PS11010001XX | 11PS11010101XX | 11PS11010501XX | 11PS11020301XX |
|---|---|---|---|---|---|---|---|---|
| LAB NUMBER: | 371657 | 371658R | 371659 | 371660 | 370410 | 370411 * | 370414 | 370412 |
| DATE SAMPLED: | 09/27/90 | 09/27/90 | 09/27/90 | 09/27/90 | 09/18/90 | 09/18/90 | 09/18/90 | 09/17/90 |
| DATE ANALYZED: | 10/04/90 | 10/04/90 | 10/04/90 | 10/04/90 | 09/24/90 | 09/28/90 | 09/26/90 | 09/26/90 |
| ANALYTE | CRQL | | | | | | | |
| Chloromethane | 10 | 12 U | 13 U | 13 U | 13 U | 12 U | 6500 U | 12 U | 68 U |
| Bromomethane | 10 | 12 U | 13 U | 13 U | 13 U | 12 U | 6500 U | 12 U | 68 U |
| Vinyl Chloride | 10 | 12 U | 13 U | 13 U | 13 U | 12 U | 6500 U | 12 U | 68 U |
| Chloroethane | 10 | 12 U | 13 U | 13 U | 13 U | 12 U | 6500 U | 12 U | 68 U |
| Methylene Chloride | 5 | 18 U | 34 UJ | 28 U | 39 U | 28 U | 1600 JJ | 13 UJ | 240 J |
| Acetone | 10 | 32 UJ | 68 U | 13 UJ | 13 UJ | 11 JJ | 6500 U | 17 U | 900 J |
| Carbon Disulfide | 5 | 6 U | 6 U | 6 U | 7 U | 6 U | 3200 U | 6 U | 34 U |
| 1,1-Dichloroethene | 5 | 6 U | 6 U | 6 U | 7 U | 6 U | 3200 U | 6 U | 34 U |
| 1,1-Dichloroethane | 5 | 6 U | 6 U | 6 U | 7 U | 6 U | 3200 U | 6 U | 34 U |
| 1,2-Dichloroethene (total) | 5 | 6 U | 6 U | 6 U | 7 U | 6 U | 3200 U | 6 U | 34 U |
| Chloroform | 5 | 6 U | 1 JJ | 6 U | 7 U | 6 U | 3200 U | 6 U | 34 U |
| 1,2-Dichloroethane | 5 | 6 U | 6 U | 6 U | 7 U | 6 U | 3200 U | 6 U | 34 U |
| 2-Butanone | 10 | 12 U | 13 U | 13 U | 13 U | 12 U | 21000 J | 12 U | 260 J |
| 1,1,1-Trichloroethane | 5 | 6 U | 6 U | 6 U | 7 U | 3 JJ | 3200 U | 6 U | 34 U |
| Carbon Tetrachloride | 5 | 6 U | 6 U | 6 U | 7 U | 6 U | 3200 U | 6 U | 34 U |
| Vinyl Acetate | 10 | 12 U | 13 U | 13 U | 13 U | 12 U | 6500 U | 12 U | 68 U |
| Bromodichloromethane | 5 | 6 U | 6 U | 6 U | 7 U | 6 U | 3200 U | 6 U | 34 U |
| 1,2-Dichloropropane | 5 | 6 U | 6 U | 6 U | 7 U | 6 U | 3200 U | 6 U | 34 U |
| cis-1,3-Dichloropropene | 5 | 6 U | 6 U | 6 U | 7 U | 6 U | 3200 U | 6 U | 34 U |
| Trichloroethene | 5 | 6 U | 6 U | 6 U | 7 U | 6 U | 3200 U | 6 U | 34 U |
| Dibromochloromethane | 5 | 6 U | 6 U | 6 U | 7 U | 6 U | 3200 U | 6 U | 34 U |
| 1,1,2-Trichloroethane | 5 | 6 U | 6 U | 6 U | 7 U | 6 U | 3200 U | 6 U | 34 U |
| Benzene | 5 | 6 U | 6 U | 6 U | 7 U | 6 U | 3200 U | 6 U | 34 U |
| trans-1,3-Dichloropropene | 5 | 6 U | 6 U | 6 U | 7 U | 6 U | 3200 U | 6 U | 34 U |
| Bromoform | 5 | 6 U | 6 U | 6 U | 7 U | 6 U | 3200 U | 6 U | 34 U |
| 4-Methyl-2-Pentanone | 10 | 12 U | 13 U | 13 U | 13 U | 12 U | 6500 U | 12 U | 68 U |
| 2-Hexanone | 10 | 12 U | 13 UJ | 13 U | 13 U | 12 U | 6500 U | 12 U | 280 |
| Tetrachloroethene | 5 | 6 U | 6 U | 6 U | 7 U | 6 U | 750 JJ | 2 JJ | 34 U |
| 1,1,2,2-Tetrachloroethane | 5 | 6 U | 6 U | 6 U | 7 U | 6 U | 3200 U | 6 U | 34 U |
| Toluene | 5 | 6 U | 6 U | 6 U | 7 U | 6 U | 3200 U | 6 U | 120 J |
| Chlorobenzene | 5 | 6 U | 6 U | 6 U | 7 U | 6 U | 3200 U | 6 U | 34 U |
| Ethylbenzene | 5 | 6 U | 6 U | 6 U | 7 U | 6 U | 3200 U | 6 U | 76 J |
| Styrene | 5 | 6 U | 6 U | 6 U | 7 U | 6 U | 3200 U | 6 U | 34 U |
| Total Xylenes | 5 | 6 U | 6 U | 6 U | 7 U | 6 U | 3200 U | 6 U | 440 J |
| Dilution Factor: | | 1.0 | 1.0 | 1.0 | 1.0 | 1.0 | 4.0 | 1.0 | 5.0 |
| Percent Solids: | | 81 | 80 | 80 | 75 | 85 | 77 | 86 | 74 |
| Associated Method Blank: | | GH072003A13 | GH072010A13 | GH072003A13 | GH072003A13 | GH070536C12 | CN071617C14 | GH070538B12 | GH070852A12 |
| Associated Equipment Blank: | | - | - | - | - | - | - | - | - |
| Associated Field Blank: | | - | - | - | - | - | - | - | - |
| Associated Trip Blank: | | - | - | - | - | - | - | - | - |

Table 2
Validation / Summary Table

| SAMPLE LOCATION: | 11PS11020401XX | 11PS11020601XX | 11PS11030101XX | 11PS11030201XX | 11PS11030601XX | 11PS11040101XX | 11PS11040201XX | 11PS11040701XX |
|---|---|---|---|---|---|---|---|---|
| LAB NUMBER: | 370409 | 370417 | 370413 | 370415 | 370416 | 370408 | 370389 | 370407 |
| DATE SAMPLED: | 09/17/90 | 09/17/90 | 09/18/90 | 09/18/90 | 09/18/90 | 09/17/90 | 09/17/90 | 09/17/90 |
| DATE ANALYZED: | 09/21/90 | 09/21/90 | 09/24/90 | 09/21/90 | 09/21/90 | 09/21/90 | 09/21/90 | 09/21/90 |
| ANALYTE | CRQL | | | | | | | |
| Chloromethane | 10 | 11 U | 11 U | 12 U | 11 U | 11 U | 10 U | 10 U | 11 U |
| Bromomethane | 10 | 11 U | 11 U | 12 U | 11 U | 11 U | 10 U | 10 U | 11 U |
| Vinyl Chloride | 10 | 11 U | 11 U | 12 U | 11 U | 11 U | 10 U | 10 U | 11 U |
| Chloroethane | 10 | 11 U | 11 U | 12 U | 11 U | 11 U | 10 U | 10 U | 11 U |
| Methylene Chloride | 5 | 13 UJ | 25 UJ | 53 U | 14 UJ | 18 UJ | 8 UJ | 11 UJ | 10 UJ |
| Acetone | 10 | 17 UJ | 110 UJ | 77 J | 22 UJ | 29 UJ | 15 UJ | 19 UJ | 15 UJ |
| Carbon Disulfide | 5 | 5 U | 5 U | 6 U | 5 U | 6 U | 5 U | 5 U | 5 U |
| 1,1-Dichloroethene | 5 | 5 U | 5 U | 6 U | 5 U | 6 U | 5 U | 5 U | 5 U |
| 1,1-Dichloroethane | 5 | 5 U | 5 U | 6 U | 5 U | 6 U | 5 U | 5 U | 5 U |
| 1,2-Dichloroethene (total) | 5 | 5 U | 5 U | 6 U | 5 U | 6 U | 5 U | 5 U | 5 U |
| Chloroform | 5 | 5 U | 5 U | 6 U | 5 U | 6 U | 5 U | 5 U | 5 U |
| 1,2-Dichloroethane | 5 | 5 U | 5 U | 6 U | 5 U | 6 U | 5 U | 5 U | 5 U |
| 2-Butanone | 10 | 11 U | 11 U | 2 JJ | 11 U | 11 U | 10 U | 10 U | 11 U |
| 1,1,1-Trichloroethane | 5 | 5 U | 10 | 13 | 5 U | 6 U | 5 U | 5 U | 5 U |
| Carbon Tetrachloride | 5 | 5 U | 5 U | 6 U | 5 U | 6 U | 5 U | 5 U | 5 U |
| Vinyl Acetate | 10 | 11 U | 11 U | 12 U | 11 U | 11 U | 10 U | 10 U | 11 U |
| Bromodichloromethane | 5 | 5 U | 5 U | 6 U | 5 U | 6 U | 5 U | 5 U | 5 U |
| 1,2-Dichloropropane | 5 | 5 U | 5 U | 6 U | 5 U | 6 U | 5 U | 5 U | 5 U |
| cis-1,3-Dichloropropene | 5 | 5 U | 5 U | 6 U | 5 U | 6 U | 5 U | 5 U | 5 U |
| Trichloroethene | 5 | 5 U | 5 U | 6 U | 5 U | 6 U | 5 U | 5 U | 5 U |
| Dibromochloromethane | 5 | 5 U | 5 U | 6 U | 5 U | 6 U | 5 U | 5 U | 5 U |
| 1,1,2-Trichloroethane | 5 | 5 U | 5 U | 6 U | 5 U | 6 U | 5 U | 5 U | 5 U |
| Benzene | 5 | 5 U | 5 U | 6 U | 5 U | 6 U | 5 U | 5 U | 5 U |
| trans-1,3-Dichloropropene | 5 | 5 U | 5 U | 6 U | 5 U | 6 U | 5 U | 5 U | 5 U |
| Bromoform | 5 | 5 U | 5 U | 6 U | 5 U | 6 U | 5 U | 5 U | 5 U |
| 4-Methyl-2-Pentanone | 10 | 11 U | 11 U | 12 U | 11 U | 11 U | 10 U | 10 U | 11 U |
| 2-Hexanone | 10 | 11 U | 13 | 12 U | 11 U | 11 U | 10 U | 10 U | 11 U |
| Tetrachloroethene | 5 | 5 U | 5 U | 2 JJ | 5 U | 6 U | 5 U | 5 U | 5 U |
| 1,1,2,2-Tetrachloroethane | 5 | 5 U | 5 U | 6 U | 5 U | 6 U | 5 U | 5 U | 5 U |
| Toluene | 5 | 5 U | 9 | 6 U | 5 U | 6 U | 5 U | 5 U | 5 U |
| Chlorobenzene | 5 | 5 U | 5 U | 6 U | 5 U | 6 U | 5 U | 5 U | 5 U |
| Ethylbenzene | 5 | 5 U | 5 U | 6 U | 5 U | 6 U | 5 U | 5 U | 5 U |
| Styrene | 5 | 5 U | 5 U | 6 U | 5 U | 6 U | 5 U | 5 U | 5 U |
| Total Xylenes | 5 | 5 U | 19 | 6 U | 5 U | 6 U | 5 U | 5 U | 5 U |
| Dilution Factor: | | 1.0 | 1.0 | 1.0 | 1.0 | 1.0 | 1.0 | 1.0 | 1.0 |
| Percent Solids: | | 93 | 95 | 86 | 93 | 89 | 98 | 98 | 95 |
| Associated Method Blank: | | GH070535B12 | GH070535B12 | GH070536C12 | GH070535B12 | GH070535B12 | GH070535B12 | GH070535B12 | GH070535B12 |
| Associated Equipment Blank: | | - | - | - | - | - | - | - | - |
| Associated Field Blank: | | - | - | - | - | - | - | - | - |
| Associated Trip Blank: | | - | - | - | - | - | - | - | - |

M-77

Table 2
Validation / Summary Table

| SAMPLE LOCATION: | 11PS11050101XX | 11PS11050201XX | 11PS11050501XX | 11PS11060101XD | 11PS11060101XX | 11PS11060201XX | 11PS11060601XX | 11PS11070201XD |
|---|---|---|---|---|---|---|---|---|
| LAB NUMBER: | 370426 | 370440 | 370430 | 370425 | 370419 | 370418 | 370423 | 370422 |
| DATE SAMPLED: | 09/18/90 | 09/18/90 | 09/18/90 | 09/17/90 | 09/17/90 | 09/17/90 | 09/17/90 | 09/17/90 |
| DATE ANALYZED: | 09/24/90 | 09/24/90 | 09/24/90 | 09/27/90 | 09/27/90 | 09/21/90 | 09/21/90 | 09/24/90 |
| ANALYTE | CRQL | | | | | | | |
| Chloromethane | 10 | 12 U | 11 U | 11 U | 11 U | 11 U | 11 U | 11 U | 11 U |
| Bromomethane | 10 | 12 U | 11 U | 11 U | 11 U | 11 U | 11 U | 11 U | 11 U |
| Vinyl Chloride | 10 | 12 U | 11 U | 11 U | 11 U | 11 U | 11 U | 11 U | 11 U |
| Chloroethane | 10 | 12 U | 11 U | 11 U | 11 U | 11 U | 11 U | 11 U | 11 U |
| Methylene Chloride | 5 | 62 U | 48 U | 26 U | 14 U | 28 U | 11 UJ | 16 UJ | 35 U |
| Acetone | 10 | 31 UJ | 32 UJ | 44 UJ | 11 U | 11 U | 19 UJ | 18 U | 26 J |
| Carbon Disulfide | 5 | 6 U | 6 U | 5 U | 5 U | 5 U | 6 U | 6 U | 5 U |
| 1,1-Dichloroethene | 5 | 6 U | 6 U | 5 U | 5 U | 5 U | 6 U | 6 U | 5 U |
| 1,1-Dichloroethane | 5 | 6 U | 6 U | 5 U | 5 U | 5 U | 6 U | 6 U | 5 U |
| 1,2-Dichloroethene (total) | 5 | 6 U | 6 U | 5 U | 5 U | 5 U | 6 U | 6 U | 5 U |
| Chloroform | 5 | 6 U | 6 U | 5 U | 5 U | 5 U | 6 U | 6 U | 5 U |
| 1,2-Dichloroethane | 5 | 6 U | 6 U | 5 U | 5 U | 5 U | 6 U | 6 U | 5 U |
| 2-Butanone | 10 | 12 U | 11 U | 11 U | 11 U | 11 U | 11 U | 11 U | 11 U |
| 1,1,1-Trichloroethane | 5 | 5 JJ | 1 JJ | 5 U | 5 U | 5 U | 6 U | 6 U | 3 JJ |
| Carbon Tetrachloride | 5 | 6 U | 6 U | 5 U | 5 U | 5 U | 6 U | 6 U | 5 U |
| Vinyl Acetate | 10 | 12 U | 11 U | 11 U | 11 U | 11 U | 11 U | 11 U | 11 U |
| Bromodichloromethane | 5 | 6 U | 6 U | 5 U | 5 U | 5 U | 6 U | 6 U | 5 U |
| 1,2-Dichloropropane | 5 | 6 U | 6 U | 5 U | 5 U | 5 U | 6 U | 6 U | 5 U |
| cis-1,3-Dichloropropene | 5 | 6 U | 6 U | 5 U | 5 U | 5 U | 6 U | 6 U | 5 U |
| Trichloroethene | 5 | 6 U | 6 U | 5 U | 5 U | 5 U | 6 U | 6 U | 15 J |
| Dibromochloromethane | 5 | 6 U | 6 U | 5 U | 5 UJ | 5 UJ | 6 U | 6 U | 5 U |
| 1,1,2-Trichloroethane | 5 | 6 U | 6 U | 5 U | 5 U | 5 U | 6 U | 6 U | 5 U |
| Benzene | 5 | 6 U | 6 U | 5 U | 5 U | 5 U | 6 U | 6 U | 5 U |
| trans-1,3-Dichloropropene | 5 | 6 U | 6 U | 5 U | 5 U | 5 U | 6 U | 6 U | 5 U |
| Bromoform | 5 | 6 U | 6 U | 5 U | 5 UJ | 5 UJ | 6 U | 6 U | 5 U |
| 4-Methyl-2-Pentanone | 10 | 12 U | 11 U | 11 U | 11 U | 11 U | 11 U | 11 U | 2 JJ |
| 2-Hexanone | 10 | 12 U | 11 U | 11 U | 11 U | 11 U | 11 U | 11 U | 11 U |
| Tetrachloroethene | 5 | 6 U | 6 U | 5 U | 5 U | 5 U | 6 U | 6 U | 5 U |
| 1,1,2,2-Tetrachloroethane | 5 | 6 U | 6 U | 5 U | 5 U | 5 U | 6 U | 6 U | 5 U |
| Toluene | 5 | 6 U | 6 U | 5 U | 5 U | 5 U | 6 U | 6 U | 5 U |
| Chlorobenzene | 5 | 6 U | 6 U | 5 U | 5 U | 5 U | 6 U | 6 U | 5 U |
| Ethylbenzene | 5 | 6 U | 6 U | 5 U | 5 U | 5 U | 6 U | 6 U | 5 U |
| Styrene | 5 | 6 U | 6 U | 5 U | 5 U | 5 U | 6 U | 6 U | 5 U |
| Total Xylenes | 5 | 6 U | 6 U | 5 U | 5 U | 5 U | 6 U | 6 U | 5 U |
| Dilution Factor: | | 1.0 | 1.0 | 1.0 | 1.0 | 1.0 | 1.0 | 1.0 | 1.0 |
| Percent Solids: | | 83 | 88 | 94 | 95 | 94 | 89 | 88 | 91 |
| Associated Method Blank: | | GH070846B12 | GH070846B12 | GH070846B12 | GH071630B11 | GH071630B11 | GH070535B12 | GH070846B12 | GH070536C12 |
| Associated Equipment Blank: | | - | - | - | - | - | - | - | - |
| Associated Field Blank: | | - | - | - | - | - | - | - | - |
| Associated Trip Blank: | | - | - | - | - | - | - | - | - |

Table 2
Validation / Summary Table

| SAMPLE LOCATION: | 11PS11070201XX | 11PS11070501XX | 11PS11070701XX | 11PS11080101XX | 11PS11080201XX | 11PS11080601XX |
|---|---|---|---|---|---|---|
| LAB NUMBER: | 370421 | 370424 | 370420 | 370435 | 370439 | 370438 |
| DATE SAMPLED: | 09/17/90 | 09/17/90 | 09/17/90 | 09/18/90 | 09/18/90 | 09/18/90 |
| DATE ANALYZED: | 09/24/90 | 09/24/90 | 09/21/90 | 09/25/90 | 09/24/90 | 09/24/90 |
| ANALYTE | CRQL | | | | | |
| Chloromethane | 10 | 11 U | 11 U | 11 U | 11 U | 10 U | 11 U |
| Bromomethane | 10 | 11 U | 11 U | 11 U | 11 U | 10 U | 11 U |
| Vinyl Chloride | 10 | 11 U | 11 U | 11 U | 11 U | 10 U | 11 U |
| Chloroethane | 10 | 11 U | 11 U | 11 U | 11 U | 10 U | 11 U |
| Methylene Chloride | 5 | 50 U | 28 UJ | 47 UJ | 29 U | 21 U | 42 U |
| Acetone | 10 | 7 JJ | 32 U | 87 UJ | 19 UJ | 37 UJ | 48 UJ |
| Carbon Disulfide | 5 | 5 U | 5 U | 6 U | 6 U | 5 U | 5 U |
| 1,1-Dichloroethene | 5 | 5 U | 5 U | 6 U | 6 U | 5 U | 5 U |
| 1,1-Dichloroethane | 5 | 5 U | 5 U | 6 U | 6 U | 5 U | 5 U |
| 1,2-Dichloroethene (total) | 5 | 5 U | 5 U | 6 U | 6 U | 5 U | 5 U |
| Chloroform | 5 | 5 U | 5 U | 6 U | 6 U | 5 U | 5 U |
| 1,2-Dichloroethane | 5 | 5 U | 5 U | 6 U | 6 U | 5 U | 5 U |
| 2-Butanone | 10 | 11 U | 11 U | 11 U | 11 U | 10 U | 11 U |
| 1,1,1-Trichloroethane | 5 | 2 JJ | 5 U | 6 U | 2 JJ | 5 U | 5 U |
| Carbon Tetrachloride | 5 | 5 U | 5 U | 6 U | 6 U | 5 U | 5 U |
| Vinyl Acetate | 10 | 11 U | 11 U | 11 U | 11 U | 10 U | 11 U |
| Bromodichloromethane | 5 | 5 U | 5 U | 6 U | 6 U | 5 U | 5 U |
| 1,2-Dichloropropane | 5 | 5 U | 5 U | 6 U | 6 U | 5 U | 5 U |
| cis-1,3-Dichloropropene | 5 | 5 U | 5 U | 6 U | 6 U | 5 U | 5 U |
| Trichloroethene | 5 | 8 J | 5 U | 6 U | 5 JJ | 5 U | 5 U |
| Dibromochloromethane | 5 | 5 U | 5 U | 6 U | 6 U | 5 U | 5 U |
| 1,1,2-Trichloroethane | 5 | 5 U | 5 U | 6 U | 6 U | 5 U | 5 U |
| Benzene | 5 | 5 U | 5 U | 6 U | 6 U | 5 U | 5 U |
| trans-1,3-Dichloropropene | 5 | 5 U | 5 U | 6 U | 6 U | 5 U | 5 U |
| Bromoform | 5 | 5 U | 5 U | 6 U | 6 U | 5 U | 5 U |
| 4-Methyl-2-Pentanone | 10 | 11 U | 11 U | 11 U | 11 U | 10 U | 11 U |
| 2-Hexanone | 10 | 11 U | 11 U | 11 U | 11 U | 10 U | 11 U |
| Tetrachloroethene | 5 | 5 U | 5 U | 6 U | 6 U | 5 U | 5 U |
| 1,1,2,2-Tetrachloroethane | 5 | 5 U | 5 U | 6 U | 6 U | 5 U | 5 U |
| Toluene | 5 | 5 U | 5 U | 6 U | 6 U | 5 U | 5 U |
| Chlorobenzene | 5 | 5 U | 5 U | 6 U | 6 U | 5 U | 5 U |
| Ethylbenzene | 5 | 5 U | 5 U | 6 U | 6 U | 5 U | 5 U |
| Styrene | 5 | 5 U | 5 U | 6 U | 6 U | 5 U | 5 U |
| Total Xylenes | 5 | 5 U | 5 U | 6 U | 6 U | 5 U | 5 U |
| Dilution Factor: | | 1.0 | 1.0 | 1.0 | 1.0 | 1.0 | 1.0 |
| Percent Solids: | | 92 | 93 | 90 | 90 | 96 | 94 |
| Associated Method Blank: | | GH070536C12 | GH070846B12 | GH070535B12 | GH070846B12 | GH070846B12 | GH070846B12 |
| Associated Equipment Blank: | | - | - | - | - | - | - |
| Associated Field Blank: | | - | - | - | - | - | - |
| Associated Trip Blank: | | - | - | - | - | - | - |

M-79

Table 2
Validation / Summary Table

| SAMPLE LOCATION: | | 11MS304X2201XD | 11MS304X2201XX | 11MS304X3401XX | 11MS304X3801XX | 11PS11010001XX | 11PS11010101XX | 11PS11010101XX | 11PS11010501XX |
|---|---|---|---|---|---|---|---|---|---|
| LAB NUMBER: | | 371657 | 371658 | 371659 | 371660 | 370410 | 370411 | 370411 D | 370414 |
| DATE SAMPLED: | | 09/27/90 | 09/27/90 | 09/27/90 | 09/27/90 | 09/18/90 | 09/18/90 | 09/18/90 | 09/18/90 |
| DATE EXTRACTED: | | 10/01/90 | 10/01/90 | 10/01/90 | 10/01/90 | 09/21/90 | 09/21/90 | 09/21/90 | 09/24/90 |
| DATE ANALYZED: | | 10/02/90 | 10/02/90 | 10/02/90 | 10/02/90 | 10/01/90 | 09/25/90 | 09/25/90 | 10/04/90 |
| ANALYTE | CRQL | | | | | | | | |
| Phenol | 330 | 400 U | 410 U | 410 U | 430 U | 1900 U | 9400 U | 330 U | 3800 U |
| bis(2-Chloroethyl)ether | 330 | 400 U | 410 U | 410 U | 430 U | 1900 U | 9400 U | 330 U | 3800 U |
| 2-Chlorophenol | 330 | 400 U | 410 U | 410 U | 430 U | 1900 U | 9400 U | 330 U | 3800 U |
| 1,3-Dichlorobenzene | 330 | 400 U | 410 U | 410 U | 430 U | 1900 U | 9400 U | 330 U | 3800 U |
| 1,4-Dichlorobenzene | 330 | 400 U | 410 U | 410 U | 430 U | 1900 U | 9400 U | 330 U | 3800 U |
| Benzyl Alcohol | 330 | 400 U | 410 U | 410 U | 430 U | 1900 U | 9400 U | 330 U | 3800 U |
| 1,2-Dichlorobenzene | 330 | 400 U | 410 U | 410 U | 430 U | 1900 U | 9400 U | 330 U | 3800 U |
| 2-Methylphenol | 330 | 400 U | 410 U | 410 U | 430 U | 1900 U | 9400 U | 330 U | 3800 U |
| bis(2-Chloroisopropyl)ether | 330 | 400 U | 410 U | 410 U | 430 U | 1900 U | 9400 U | 330 U | 3800 U |
| 4-Methylphenol | 330 | 400 U | 410 U | 410 U | 430 U | 1900 U | 9400 U | 330 U | 3800 U |
| N-Nitroso-di-n-propylamine | 330 | 400 U | 410 U | 410 U | 430 U | 1900 U | 9400 U | 330 U | 3800 U |
| Hexachloroethane | 330 | 400 U | 410 U | 410 U | 430 U | 1900 U | 9400 U | 330 U | 3800 U |
| Nitrobenzene | 330 | 400 U | 410 U | 410 U | 430 U | 1900 U | 9400 U | 330 U | 3800 U |
| Isophorone | 330 | 400 U | 410 U | 410 U | 430 U | 1900 U | 9400 U | 330 U | 3800 U |
| 2-Nitrophenol | 330 | 400 U | 410 U | 410 U | 430 U | 1900 U | 9400 U | 330 U | 3800 U |
| 2,4-Dimethylphenol | 330 | 400 U | 410 U | 410 U | 430 U | 1900 U | 9400 U | 330 U | 3800 U |
| Benzoic Acid | 1600 | 1900 U | 2000 U | 300 JJ | 70 JJ | 9400 U | 46000 U | 1600 U | 18000 U |
| bis(2-Chloroethoxy)methane | 330 | 400 U | 410 U | 410 U | 430 U | 1900 U | 9400 U | 330 U | 3800 U |
| 2,4-Dichlorophenol | 330 | 400 U | 410 U | 410 U | 430 U | 1900 U | 9400 U | 330 U | 3800 U |
| 1,2,4-Trichlorobenzene | 330 | 400 U | 410 U | 410 U | 430 U | 1900 U | 9400 U | 330 U | 3800 U |
| Naphthalene | 330 | 400 U | 410 U | 410 U | 430 U | 1900 U | 9400 U | 330 U | 3800 U |
| 4-Chloroaniline | 330 | 400 U | 410 U | 410 U | 430 U | 1900 U | 9400 U | 330 U | 3800 U |
| Hexachlorobutadiene | 330 | 400 U | 410 U | 410 U | 430 U | 1900 U | 9400 U | 330 U | 3800 U |
| 4-Chloro-3-Methylphenol | 330 | 400 U | 410 U | 410 U | 430 U | 1900 U | 9400 U | 330 U | 3800 U |
| 2-Methylnaphthalene | 330 | 400 U | 410 U | 410 U | 430 U | 1900 U | 9400 U | 330 U | 3800 U |
| Hexachlorocyclopentadiene | 330 | 400 U | 410 U | 410 U | 430 U | 1900 U | 9400 U | 330 U | 3800 U |
| 2,4,6-Trichlorophenol | 330 | 400 U | 410 U | 410 U | 430 U | 1900 U | 9400 U | 330 U | 3800 U |
| 2,4,5-Trichlorophenol | 1600 | 1900 U | 2000 U | 2000 U | 2100 U | 9400 U | 46000 U | 1600 U | 18000 U |
| 2-Chloronaphthalene | 330 | 400 U | 410 U | 410 U | 430 U | 1900 U | 9400 U | 330 U | 3800 U |
| 2-Nitroaniline | 1600 | 1900 U | 2000 U | 2000 U | 2100 U | 9400 U | 46000 U | 1600 U | 18000 U |
| Dimethylphthalate | 330 | 400 U | 410 U | 410 U | 430 U | 1900 U | 9400 U | 330 U | 3800 U |
| Acenaphthylene | 330 | 400 U | 410 U | 410 U | 430 U | 1900 U | 9400 U | 330 U | 3800 U |
| 2,6-Dinitrotoluene | 330 | 400 U | 410 U | 410 U | 430 U | 1900 U | 9400 U | 330 U | 3800 U |

PROJECT: Naval Air Station Brunswick - Round 5 Semivolatile Organic Soil Analysis (ug/kg) 03/14/91

Table 2
Validation / Summary Table

| SAMPLE LOCATION: | 11MS304X2201XD | 11MS304X2201XX | 11MS304X3401XX | 11MS304X3801XX | 11PS11010001XX | 11PS11010101XX | 11PS11010501XX | 11PS11020301XX |
|---|---|---|---|---|---|---|---|---|
| LAB NUMBER: | 371657 | 371658 | 371659 | 371660 | 370410 | 370411 | 370414 | 370412 |
| DATE SAMPLED: | 09/27/90 | 09/27/90 | 09/27/90 | 09/27/90 | 09/18/90 | 09/18/90 | 09/18/90 | 09/17/90 |
| DATE EXTRACTED: | 10/01/90 | 10/01/90 | 10/01/90 | 10/01/90 | 09/21/90 | 09/21/90 | 09/24/90 | 09/22/90 |
| DATE ANALYZED: | 10/02/90 | 10/02/90 | 10/02/90 | 10/02/90 | 10/01/90 | 09/25/90 | 10/04/90 | 10/09/90 |
| ANALYTE / CRQL | | | | | | | | |
| 3-Nitroaniline 1600 | 1900 U | 2000 U | 2000 U | 2100 U | 9400 U | 46000 U | 18000 U | 11000 UR |
| Acenaphthene 330 | 400 U | 410 U | 410 U | 430 U | 1900 U | 9400 U | 3800 U | 2200 UR |
| 2,4-Dinitrophenol 1600 | 1900 U | 2000 U | 2000 U | 2100 U | 9400 U | 46000 U | 18000 U | 11000 UR |
| 4-Nitrophenol 1600 | 1900 U | 2000 U | 2000 U | 2100 U | 9400 U | 46000 U | 18000 U | 11000 UR |
| Dibenzofuran 330 | 400 U | 410 U | 410 U | 430 U | 1900 U | 2000 DJ | 3800 U | 2200 UR |
| 2,4-Dinitrotoluene 330 | 400 U | 410 U | 410 U | 430 U | 1900 U | 9400 U | 3800 U | 2200 UR |
| Diethylphthalate 330 | 400 U | 410 U | 410 U | 430 U | 1900 U | 9400 U | 3800 U | 2200 UR |
| 4-Chlorophenyl-phenylether 330 | 400 U | 410 U | 410 U | 430 U | 1900 U | 9400 U | 3800 U | 2200 UR |
| Fluorene 330 | 400 U | 410 U | 410 U | 430 U | 1900 U | 9400 U | 3800 U | 1300 JJ |
| 4-Nitroaniline 1600 | 1900 U | 2000 U | 2000 U | 2100 U | 9400 U | 46000 U | 18000 U | 11000 UR |
| 4,6-Dinitro-2-methylphenol 1600 | 1900 U | 2000 U | 2000 U | 2100 U | 9400 U | 46000 U | 18000 U | 11000 UR |
| N-Nitrosodiphenylamine 330 | 400 U | 410 U | 410 U | 430 U | 1900 U | 9400 U | 3800 U | 2200 UR |
| 4-Bromophenyl-phenylether 330 | 400 U | 410 U | 410 U | 430 U | 1900 U | 9400 U | 3800 U | 2200 UR |
| Hexachlorobenzene 330 | 400 U | 410 U | 410 U | 430 U | 1900 U | 9400 U | 3800 U | 2200 UR |
| Pentachlorophenol 1600 | 1900 U | 2000 U | 110 JJ | 2100 U | 9400 U | 46000 U | 18000 U | 11000 UR |
| Phenanthrene 330 | 400 U | 410 U | 410 U | 430 U | 1900 U | 3600 | 3800 U | 2800 J |
| Anthracene 330 | 400 U | 410 U | 410 U | 430 U | 1900 U | 9400 U | 3800 U | 2200 UR |
| Di-n-butylphthalate 330 | 400 U | 410 U | 410 U | 430 U | 1900 U | 9400 U | 550 JJ | 390 JJ |
| Fluoranthene 330 | 400 U | 410 U | 410 U | 430 U | 1900 U | 1200 DJ | 3800 U | 600 JJ |
| Pyrene 330 | 400 U | 410 U | 410 U | 430 U | 470 JJ | 2600 DJ | 440 JJ | 3500 J |
| Butylbenzylphthalate 330 | 400 U | 410 U | 410 U | 430 U | 1900 U | 9400 U | 3800 U | 2200 UR |
| 3,3'-Dichlorobenzidine 660 | 790 U | 810 U | 810 U | 860 U | 3900 U | 19000 U | 7600 U | 4500 UR |
| Benzo(a)Anthracene 330 | 400 U | 410 U | 410 U | 430 U | 1900 U | 530 JJ | 3800 U | 1800 JJ |
| Chrysene 330 | 400 U | 410 U | 410 U | 430 U | 330 JJ | 790 JJ | 3800 U | 3000 J |
| bis(2-Ethylhexyl)phthalate 330 | 400 U | 410 U | 410 U | 430 U | 290 JJ | 540 JJ | 420 JJ | 2200 UR |
| Di-n-octylphthalate 330 | 400 U | 410 U | 410 U | 430 U | 1900 U | 9400 U | 3800 U | 2200 UR |
| Benzo(b)Fluoranthene 330 | 400 U | 410 U | 410 U | 430 U | 430 JJX | 940 JJ | 3800 U | 630 JJX |
| Benzo(k)Fluoranthene 330 | 400 U | 410 U | 410 U | 430 U | 430 JJX | 430 JJ | 3800 U | 630 JJX |
| Benzo(a)Pyrene 330 | 400 U | 410 U | 410 U | 430 U | 200 JJ | 9400 U | 3800 U | 870 JJ |
| Indeno(1,2,3-c,d)Pyrene 330 | 400 U | 410 U | 410 U | 430 U | 1900 U | 9400 U | 3800 U | 2200 UR |
| Dibenz(a,h)Anthracene 330 | 400 U | 410 U | 410 U | 430 U | 1900 U | 9400 U | 3800 U | 2200 UR |
| Benzo(g,h,i)perylene 330 | 400 U | 410 U | 410 U | 430 U | 1900 U | 9400 U | 3800 U | 540 JJ |
| Dilution Factor: | 1.0 | 1.0 | 1.0 | 1.0 | 5.0 | 22 | 10 | 5.0 |
| Percent Solids: | 81 | 80 | 80 | 75 | 85 | 77 | 86 | 74 |
| Associated Method Blank: | GH071984A04 | GH071984A04 | GH071984A04 | GH071984A04 | GH070975C20 | GH070975C20 | GH071207B20 | GJ071048A20 |
| Associated Equipment Blank: | - | - | - | - | - | - | - | - |
| Associated Field Blank: | - | - | - | - | - | - | - | - |

Table 2
Validation / Summary Table

| SAMPLE LOCATION: | | 11PS11020301XX | 11PS11020401XX | 11PS11020601XX | 11PS11030101XX | 11PS11030201XX | 11PS11030601XX | 11PS11040101XX | 11PS11040201XX |
|---|---|---|---|---|---|---|---|---|---|
| LAB NUMBER: | | 370412 | 370409 | 370417 | 370413 | 370415 | 370416 | 370408 | 370389 |
| DATE SAMPLED: | | 09/17/90 | 09/17/90 | 09/17/90 | 09/18/90 | 09/18/90 | 09/18/90 | 09/17/90 | 09/17/90 |
| DATE EXTRACTED: | | 09/22/90 | 09/21/90 | 09/21/90 | 09/21/90 | 09/21/90 | 09/21/90 | 09/21/90 | 09/21/90 |
| DATE ANALYZED: | | 10/09/90 | 09/25/90 | 10/01/90 | 10/01/90 | 09/25/90 | 09/25/90 | 09/25/90 | 09/25/90 |
| ANALYTE | CRQL | | | | | | | | |
| Phenol | 330 | 2200 UR | 350 U | 1700 U | 3800 U | 5300 U | 370 U | 330 U | 330 U |
| bis(2-Chloroethyl)ether | 330 | 2200 UR | 350 U | 1700 U | 3800 U | 5300 U | 370 U | 330 U | 330 U |
| 2-Chlorophenol | 330 | 2200 UR | 350 U | 1700 U | 3800 U | 5300 U | 370 U | 330 U | 330 U |
| 1,3-Dichlorobenzene | 330 | 2200 UR | 350 U | 1700 U | 3800 U | 5300 U | 370 U | 330 U | 330 U |
| 1,4-Dichlorobenzene | 330 | 2200 UR | 350 U | 1700 U | 3800 U | 5300 U | 370 U | 330 U | 330 U |
| Benzyl Alcohol | 330 | 2200 UR | 350 U | 1700 U | 3800 U | 5300 U | 370 U | 330 U | 330 U |
| 1,2-Dichlorobenzene | 330 | 2200 UR | 350 U | 1700 U | 3800 U | 5300 U | 370 U | 330 U | 330 U |
| 2-Methylphenol | 330 | 2200 UR | 350 U | 1700 U | 3800 U | 5300 U | 370 U | 330 U | 330 U |
| bis(2-Chloroisopropyl)ether | 330 | 2200 UR | 350 U | 1700 U | 3800 U | 5300 U | 370 U | 330 U | 330 U |
| 4-Methylphenol | 330 | 2200 UR | 350 U | 1700 U | 3800 U | 5300 U | 370 U | 330 U | 330 U |
| N-Nitroso-di-n-propylamine | 330 | 2200 UR | 350 U | 1700 U | 3800 U | 5300 U | 370 U | 330 U | 330 U |
| Hexachloroethane | 330 | 2200 UR | 350 U | 1700 U | 3800 U | 5300 U | 370 U | 330 U | 330 U |
| Nitrobenzene | 330 | 2200 UR | 350 U | 1700 U | 3800 U | 5300 U | 370 U | 330 U | 330 U |
| Isophorone | 330 | 2200 UR | 350 U | 1700 U | 3800 U | 5300 U | 370 U | 330 U | 330 U |
| 2-Nitrophenol | 330 | 2200 UR | 350 U | 1700 U | 3800 U | 5300 U | 370 U | 330 U | 330 U |
| 2,4-Dimethylphenol | 330 | 2200 UR | 350 U | 1700 U | 3800 U | 5300 U | 370 U | 330 U | 330 U |
| Benzoic Acid | 1600 | 11000 UR | 130 JJ | 8400 U | 18000 U | 26000 U | 1800 U | 1600 U | 1600 U |
| bis(2-Chloroethoxy)methane | 330 | 2200 UR | 350 U | 1700 U | 3800 U | 5300 U | 370 U | 330 U | 330 U |
| 2,4-Dichlorophenol | 330 | 2200 UR | 350 U | 1700 U | 3800 U | 5300 U | 370 U | 330 U | 330 U |
| 1,2,4-Trichlorobenzene | 330 | 2200 UR | 350 U | 1700 U | 3800 U | 5300 U | 370 U | 330 U | 330 U |
| Naphthalene | 330 | 2900 J | 350 U | 1700 U | 3800 U | 5300 U | 370 U | 330 U | 330 U |
| 4-Chloroaniline | 330 | 2200 UR | 350 U | 1700 U | 3800 U | 5300 U | 370 U | 330 U | 330 U |
| Hexachlorobutadiene | 330 | 2200 UR | 350 U | 1700 U | 3800 U | 5300 U | 370 U | 330 U | 330 U |
| 4-Chloro-3-Methylphenol | 330 | 2200 UR | 350 U | 1700 U | 3800 U | 5300 U | 370 U | 330 U | 330 U |
| 2-Methylnaphthalene | 330 | 11000 J | 350 U | 1400 JJ | 3800 U | 5300 U | 370 U | 330 U | 330 U |
| Hexachlorocyclopentadiene | 330 | 2200 UR | 350 U | 1700 U | 3800 U | 5300 U | 370 U | 330 U | 330 U |
| 2,4,6-Trichlorophenol | 330 | 2200 UR | 350 U | 1700 U | 3800 U | 5300 U | 370 U | 330 U | 330 U |
| 2,4,5-Trichlorophenol | 1600 | 11000 UR | 1700 U | 8400 U | 18000 U | 26000 U | 1800 U | 1600 U | 1600 U |
| 2-Chloronaphthalene | 330 | 2200 UR | 350 U | 1700 U | 3800 U | 5300 U | 370 U | 330 U | 330 U |
| 2-Nitroaniline | 1600 | 11000 UR | 1700 U | 8400 U | 18000 U | 26000 U | 1800 U | 1600 U | 1600 U |
| Dimethylphthalate | 330 | 2200 UR | 350 U | 1700 U | 3800 U | 5300 U | 370 U | 330 U | 330 U |
| Acenaphthylene | 330 | 2200 UR | 350 U | 1700 U | 3800 U | 5300 U | 370 U | 330 U | 330 U |
| 2,6-Dinitrotoluene | 330 | 2200 UR | 350 U | 1700 U | 3800 U | 5300 U | 370 U | 330 U | 330 U |

Table 2
Validation / Summary Table

| SAMPLE LOCATION: | | 11PS11020401XX | 11PS11020601XX | 11PS11030101XX | 11PS11030201XX | 11PS11030601XX | 11PS11040101XX | 11PS11040201XX | 11PS11040701XX |
|---|---|---|---|---|---|---|---|---|---|
| LAB NUMBER: | | 370409 | 370417 | 370413 | 370415 | 370416 | 370408 | 370389 | 370407 |
| DATE SAMPLED: | | 09/17/90 | 09/17/90 | 09/18/90 | 09/18/90 | 09/18/90 | 09/17/90 | 09/17/90 | 09/17/90 |
| DATE EXTRACTED: | | 09/21/90 | 09/21/90 | 09/21/90 | 09/21/90 | 09/21/90 | 09/21/90 | 09/21/90 | 09/21/90 |
| DATE ANALYZED: | | 09/25/90 | 10/01/90 | 10/01/90 | 09/25/90 | 09/25/90 | 09/25/90 | 09/25/90 | 09/25/90 |
| ANALYTE | CRQL | | | | | | | | |
| 3-Nitroaniline | 1600 | 1700 U | 8400 U | 18000 U | 26000 U | 1800 U | 1600 U | 1600 U | 1700 U |
| Acenaphthene | 330 | 350 U | 1100 JJ | 3800 U | 5300 U | 370 U | 330 U | 330 U | 350 U |
| 2,4-Dinitrophenol | 1600 | 1700 U | 8400 U | 18000 U | 26000 U | 1800 U | 1600 U | 1600 U | 1700 U |
| 4-Nitrophenol | 1600 | 1700 U | 8400 U | 18000 U | 26000 U | 1800 U | 1600 UJ | 1600 UJ | 1700 UJ |
| Dibenzofuran | 330 | 350 U | 1700 U | 3800 U | 5300 U | 370 U | 330 U | 330 U | 350 U |
| 2,4-Dinitrotoluene | 330 | 350 U | 1700 U | 3800 U | 5300 U | 370 U | 330 U | 330 U | 350 U |
| Diethylphthalate | 330 | 350 U | 1700 U | 3800 U | 5300 U | 370 U | 330 U | 330 U | 350 U |
| 4-Chlorophenyl-phenylether | 330 | 350 U | 1700 U | 3800 U | 5300 U | 370 U | 330 U | 330 U | 350 U |
| Fluorene | 330 | 350 U | 1500 JJ | 3800 U | 5300 U | 370 U | 330 U | 330 U | 350 U |
| 4-Nitroaniline | 1600 | 1700 U | 8400 U | 18000 U | 26000 U | 1800 U | 1600 U | 1600 U | 1700 U |
| 4,6-Dinitro-2-methylphenol | 1600 | 1700 U | 8400 U | 18000 U | 26000 U | 1800 U | 1600 U | 1600 U | 1700 U |
| N-Nitrosodiphenylamine | 330 | 350 U | 1700 U | 3800 U | 5300 U | 370 U | 330 U | 330 U | 350 U |
| 4-Bromophenyl-phenylether | 330 | 350 U | 1700 U | 3800 U | 5300 U | 370 U | 330 U | 330 U | 350 U |
| Hexachlorobenzene | 330 | 350 U | 1700 U | 3800 U | 5300 U | 370 U | 330 U | 330 U | 350 U |
| Pentachlorophenol | 1600 | 1700 U | 8400 U | 18000 U | 26000 U | 1800 U | 1600 U | 1600 U | 1700 U |
| Phenanthrene | 330 | 350 U | 2100 | 3800 U | 5300 U | 370 U | 330 U | 330 U | 350 U |
| Anthracene | 330 | 350 U | 630 JJ | 3800 U | 5300 U | 370 U | 330 U | 330 U | 350 U |
| Di-n-butylphthalate | 330 | 350 U | 200 JJ | 3800 U | 5300 U | 370 U | 330 U | 330 U | 350 U |
| Fluoranthene | 330 | 350 U | 1700 U | 3800 U | 5300 U | 370 U | 330 U | 330 U | 350 U |
| Pyrene | 330 | 350 U | 560 JJ | 510 JJ | 5300 U | 370 U | 330 U | 330 U | 350 U |
| Butylbenzylphthalate | 330 | 350 U | 1700 U | 690 JJ | 5300 U | 370 U | 330 U | 330 U | 350 U |
| 3,3'-Dichlorobenzidine | 660 | 710 U | 3500 U | 7600 U | 11000 U | 730 U | 660 U | 670 U | 690 U |
| Benzo(a)Anthracene | 330 | 350 U | 1700 U | 3800 U | 5300 U | 370 U | 330 U | 330 U | 350 U |
| Chrysene | 330 | 350 U | 310 JJ | 3800 U | 5300 U | 370 U | 330 U | 330 U | 350 U |
| bis(2-Ethylhexyl)phthalate | 330 | 61 JJ | 250 JJ | 900 JJ | 5300 U | 37 JJ | 330 U | 330 U | 350 U |
| Di-n-octylphthalate | 330 | 350 U | 1700 U | 3800 U | 5300 U | 370 U | 330 U | 330 U | 350 U |
| Benzo(b)Fluoranthene | 330 | 350 U | 1700 U | 3800 U | 5300 U | 370 U | 330 U | 330 U | 350 U |
| Benzo(k)Fluoranthene | 330 | 350 U | 1700 U | 3800 U | 5300 U | 370 U | 330 U | 330 U | 350 U |
| Benzo(a)Pyrene | 330 | 350 U | 1700 U | 3800 U | 5300 U | 370 U | 330 U | 330 U | 350 U |
| Indeno(1,2,3-c,d)Pyrene | 330 | 350 U | 1700 U | 3800 U | 5300 U | 370 U | 330 U | 330 U | 350 U |
| Dibenz(a,h)Anthracene | 330 | 350 U | 1700 U | 3800 U | 5300 U | 370 U | 330 U | 330 U | 350 U |
| Benzo(g,h,i)perylene | 330 | 350 U | 1700 U | 3800 U | 5300 U | 370 U | 330 U | 330 U | 350 U |
| Dilution Factor: | | 1.0 | 5.0 | 10 | 15 | 1.0 | 1.0 | 1.0 | 1.0 |
| Percent Solids: | | 93 | 95 | 86 | 93 | 89 | 98 | 98 | 95 |
| Associated Method Blank: | | GH070975C20 | GH070975C20 | GH070975C20 | GH070975C20 | GH070975C20 | GH070910C22 | GH070910C22 | GH070910C22 |
| Associated Equipment Blank: | | - | - | - | - | - | - | - | - |
| Associated Field Blank: | | - | - | - | - | - | - | - | - |

Table 2
Validation / Summary Table

| SAMPLE LOCATION: | | 11PS11040701XX | 11PS11050101XX | 11PS11050201XX | 11PS11050501XX | 11PS11060101XD | 11PS11060101XX | 11PS11060201XX | 11PS11060601XX |
|---|---|---|---|---|---|---|---|---|---|
| LAB NUMBER: | | 370407 | 370426 | 370440 | 370430 | 370425 | 370419 | 370418 | 370423 |
| DATE SAMPLED: | | 09/17/90 | 09/18/90 | 09/18/90 | 09/18/90 | 09/17/90 | 09/17/90 | 09/17/90 | 09/17/90 |
| DATE EXTRACTED: | | 09/21/90 | 09/21/90 | 09/21/90 | 09/21/90 | 09/21/90 | 09/21/90 | 09/21/90 | 09/21/90 |
| DATE ANALYZED: | | 09/25/90 | 09/25/90 | 09/24/90 | 09/25/90 | 09/27/90 | 09/27/90 | 09/26/90 | 09/26/90 |
| ANALYTE | CRQL | | | | | | | | |
| Phenol | 330 | 350 U | 400 U | 370 U | 350 U | 1700 U | 700 U | 370 U | 380 U |
| bis(2-Chloroethyl)ether | 330 | 350 U | 400 U | 370 U | 350 U | 1700 U | 700 U | 370 U | 380 U |
| 2-Chlorophenol | 330 | 350 U | 400 U | 370 U | 350 U | 1700 U | 700 U | 370 U | 380 U |
| 1,3-Dichlorobenzene | 330 | 350 U | 400 U | 370 U | 350 U | 1700 U | 700 U | 370 U | 380 U |
| 1,4-Dichlorobenzene | 330 | 350 U | 400 U | 370 U | 350 U | 1700 U | 700 U | 370 U | 380 U |
| Benzyl Alcohol | 330 | 350 U | 400 U | 370 U | 350 U | 1700 U | 700 U | 370 U | 380 U |
| 1,2-Dichlorobenzene | 330 | 350 U | 400 U | 370 U | 350 U | 1700 U | 700 U | 370 U | 380 U |
| 2-Methylphenol | 330 | 350 U | 400 U | 370 U | 350 U | 1700 U | 700 U | 370 U | 380 U |
| bis(2-Chloroisopropyl)ether | 330 | 350 U | 400 U | 370 UJ | 350 U | 1700 U | 700 U | 370 U | 380 U |
| 4-Methylphenol | 330 | 350 U | 400 U | 370 U | 350 U | 1700 U | 700 U | 370 U | 380 U |
| N-Nitroso-di-n-propylamine | 330 | 350 U | 400 U | 370 U | 350 U | 1700 U | 700 U | 370 U | 380 U |
| Hexachloroethane | 330 | 350 U | 400 U | 370 U | 350 U | 1700 U | 700 U | 370 U | 380 U |
| Nitrobenzene | 330 | 350 U | 400 U | 370 U | 350 U | 1700 U | 700 U | 370 U | 380 U |
| Isophorone | 330 | 350 U | 400 U | 370 U | 350 U | 1700 U | 700 U | 370 U | 380 U |
| 2-Nitrophenol | 330 | 350 U | 400 U | 370 U | 350 U | 1700 U | 700 U | 370 U | 380 U |
| 2,4-Dimethylphenol | 330 | 350 U | 400 U | 370 U | 350 U | 1700 U | 700 U | 370 U | 380 U |
| Benzoic Acid | 1600 | 1700 U | 1900 U | 1800 U | 1700 U | 8400 U | 3400 U | 1800 U | 1800 U |
| bis(2-Chloroethoxy)methane | 330 | 350 U | 400 U | 370 U | 350 U | 1700 U | 700 U | 370 U | 380 U |
| 2,4-Dichlorophenol | 330 | 350 U | 400 U | 370 U | 350 U | 1700 U | 700 U | 370 U | 380 U |
| 1,2,4-Trichlorobenzene | 330 | 350 U | 400 U | 370 U | 350 U | 1700 U | 700 U | 370 U | 380 U |
| Naphthalene | 330 | 350 U | 400 U | 370 U | 350 U | 1700 U | 700 U | 370 U | 380 U |
| 4-Chloroaniline | 330 | 350 U | 400 U | 370 U | 350 U | 1700 U | 700 U | 370 U | 380 U |
| Hexachlorobutadiene | 330 | 350 U | 400 U | 370 U | 350 U | 1700 U | 700 U | 370 U | 380 U |
| 4-Chloro-3-Methylphenol | 330 | 350 U | 400 U | 370 U | 350 U | 1700 U | 700 U | 370 U | 380 U |
| 2-Methylnaphthalene | 330 | 350 U | 400 U | 370 U | 350 U | 1700 U | 700 U | 370 U | 380 U |
| Hexachlorocyclopentadiene | 330 | 350 U | 400 U | 370 U | 350 U | 1700 U | 700 U | 370 U | 380 U |
| 2,4,6-Trichlorophenol | 330 | 350 U | 400 U | 370 U | 350 U | 1700 U | 700 U | 370 U | 380 U |
| 2,4,5-Trichlorophenol | 1600 | 1700 U | 1900 U | 1800 U | 1700 U | 8400 U | 3400 U | 1800 U | 1800 U |
| 2-Chloronaphthalene | 330 | 350 U | 400 U | 370 U | 350 U | 1700 U | 700 U | 370 U | 380 U |
| 2-Nitroaniline | 1600 | 1700 U | 1900 U | 1800 U | 1700 U | 8400 U | 3400 U | 1800 U | 1800 U |
| Dimethylphthalate | 330 | 350 U | 400 U | 370 U | 350 U | 1700 U | 700 U | 370 U | 380 U |
| Acenaphthylene | 330 | 350 U | 400 U | 370 U | 350 U | 1700 U | 700 U | 370 U | 380 U |
| 2,6-Dinitrotoluene | 330 | 350 U | 400 U | 370 U | 350 U | 1700 U | 700 U | 370 U | 380 U |

Table 2
Validation / Summary Table

| SAMPLE LOCATION: | | 11PS11050101XX | 11PS11050201XX | 11PS11050501XX | 11PS11060101XD | 11PS11060101XX | 11PS11060201XX | 11PS11060601XX | 11PS11070201XD |
|---|---|---|---|---|---|---|---|---|---|
| LAB NUMBER: | | 370426 | 370440 | 370430 | 370425 | 370419 | 370418 | 370423 | 370422 |
| DATE SAMPLED: | | 09/18/90 | 09/18/90 | 09/18/90 | 09/17/90 | 09/17/90 | 09/17/90 | 09/17/90 | 09/17/90 |
| DATE EXTRACTED: | | 09/21/90 | 09/21/90 | 09/21/90 | 09/21/90 | 09/21/90 | 09/21/90 | 09/21/90 | 09/21/90 |
| DATE ANALYZED: | | 09/25/90 | 09/24/90 | 09/25/90 | 09/27/90 | 09/27/90 | 09/26/90 | 09/26/90 | 09/27/90 |
| ANALYTE | CRQL | | | | | | | | |
| 3-Nitroaniline | 1600 | 1900 U | 1800 U | 1700 U | 8400 U | 3400 U | 1800 U | 1800 U | 1800 U |
| Acenaphthene | 330 | 400 U | 370 U | 350 U | 1700 U | 120 JJ | 370 U | 380 U | 360 U |
| 2,4-Dinitrophenol | 1600 | 1900 U | 1800 U | 1700 U | 8400 UJ | 3400 UJ | 1800 U | 1800 U | 1800 UJ |
| 4-Nitrophenol | 1600 | 1900 U | 1800 U | 1700 U | 8400 U | 3400 U | 1800 U | 1800 U | 1800 U |
| Dibenzofuran | 330 | 400 U | 370 U | 350 U | 1700 U | 700 U | 370 U | 380 U | 360 U |
| 2,4-Dinitrotoluene | 330 | 400 U | 370 U | 350 U | 1700 U | 700 U | 370 U | 380 U | 360 U |
| Diethylphthalate | 330 | 400 U | 370 U | 350 U | 1700 U | 700 U | 370 U | 380 U | 360 U |
| 4-Chlorophenyl-phenylether | 330 | 400 U | 370 U | 350 U | 1700 U | 700 U | 370 U | 380 U | 360 U |
| Fluorene | 330 | 400 U | 370 U | 350 U | 1700 U | 99 JJ | 370 U | 380 U | 360 U |
| 4-Nitroaniline | 1600 | 1900 U | 1800 U | 1700 U | 8400 U | 3400 U | 1800 U | 1800 U | 1800 U |
| 4,6-Dinitro-2-methylphenol | 1600 | 1900 U | 1800 U | 1700 U | 8400 U | 3400 U | 1800 U | 1800 U | 1800 U |
| N-Nitrosodiphenylamine | 330 | 400 U | 370 U | 350 U | 1700 U | 700 U | 370 U | 380 U | 360 U |
| 4-Bromophenyl-phenylether | 330 | 400 U | 370 U | 350 U | 1700 U | 700 U | 370 U | 380 U | 360 U |
| Hexachlorobenzene | 330 | 400 U | 370 U | 350 U | 1700 U | 700 U | 370 U | 380 U | 360 U |
| Pentachlorophenol | 1600 | 1900 U | 1800 U | 1700 U | 8400 U | 3400 U | 1800 U | 1800 U | 1800 U |
| Phenanthrene | 330 | 400 U | 370 U | 350 U | 1700 U | 660 JJ | 370 U | 380 U | 360 U |
| Anthracene | 330 | 400 U | 370 U | 350 U | 1700 U | 150 JJ | 370 U | 380 U | 360 U |
| Di-n-butylphthalate | 330 | 56 JJ | 370 U | 350 U | 250 JJ | 200 JJ | 370 U | 120 JJ | 360 U |
| Fluoranthene | 330 | 400 U | 370 U | 350 U | 1700 UJ | 970 J | 370 U | 380 U | 67 JJ |
| Pyrene | 330 | 42 JJ | 370 U | 350 U | 240 JJ | 590 JJ | 370 U | 380 U | 70 JJ |
| Butylbenzylphthalate | 330 | 400 U | 370 U | 350 U | 1700 U | 700 U | 370 U | 380 U | 360 U |
| 3,3'-Dichlorobenzidine | 660 | 800 U | 730 U | 700 U | 3500 U | 180 JJ | 740 U | 750 U | 730 U |
| Benzo(a)Anthracene | 330 | 400 U | 370 U | 350 U | 1700 U | 430 JJ | 370 U | 380 U | 360 U |
| Chrysene | 330 | 400 U | 370 U | 350 U | 1700 U | 470 JJ | 370 U | 380 U | 49 JJ |
| bis(2-Ethylhexyl)phthalate | 330 | 41 JJ | 370 U | 350 U | 8400 | 8900 | 370 U | 380 U | 360 U |
| Di-n-octylphthalate | 330 | 400 U | 370 U | 350 U | 480 JJ | 700 U | 370 U | 380 U | 360 U |
| Benzo(b)Fluoranthene | 330 | 74 JJX | 370 U | 350 U | 1700 UJ | 940 JX | 370 U | 380 U | 110 JJ |
| Benzo(k)Fluoranthene | 330 | 74 JJX | 370 U | 350 U | 1700 UJ | 940 JX | 370 U | 380 U | 110 JJ |
| Benzo(a)Pyrene | 330 | 400 U | 370 U | 350 U | 1700 U | 450 JJ | 370 U | 380 U | 360 U |
| Indeno(1,2,3-c,d)Pyrene | 330 | 400 U | 370 U | 350 U | 1700 U | 240 JJ | 370 U | 380 U | 360 U |
| Dibenz(a,h)Anthracene | 330 | 400 U | 370 U | 350 U | 1700 U | 94 JJ | 370 U | 380 U | 360 U |
| Benzo(g,h,i)perylene | 330 | 400 U | 370 U | 350 U | 1700 U | 250 JJ | 370 U | 380 U | 360 U |
| Dilution Factor: | | 1.0 | 1.0 | 1.0 | 5.0 | 2.0 | 1.0 | 1.0 | 1.0 |
| Percent Solids: | | 83 | 88 | 94 | 95 | 94 | 89 | 88 | 91 |
| Associated Method Blank: | | GH070856C20 | GH070859C20 | GH070856C20 | G2J71017A20 | G2J71017A20 | G2J71017A20 | G2J71017A20 | G2J71017A20 |
| Associated Equipment Blank: | | - | - | - | - | - | - | - | - |
| Associated Field Blank: | | - | - | - | - | - | - | - | - |

Table 2
Validation / Summary Table

| SAMPLE LOCATION: | | 11PS11070201XD | 11PS11070201XX | 11PS11070501XX | 11PS11070701XX | 11PS11080101XX | 11PS11080201XX | 11PS11080601XX |
|---|---|---|---|---|---|---|---|---|
| LAB NUMBER: | | 370422 | 370421 | 370424 | 370420 | 370435 | 370439 | 370438 |
| DATE SAMPLED: | | 09/17/90 | 09/17/90 | 09/17/90 | 09/17/90 | 09/18/90 | 09/18/90 | 09/18/90 |
| DATE EXTRACTED: | | 09/21/90 | 09/21/90 | 09/21/90 | 09/21/90 | 09/21/90 | 09/21/90 | 09/21/90 |
| DATE ANALYZED: | | 09/27/90 | 09/25/90 | 09/27/90 | 09/26/90 | 09/25/90 | 09/24/90 | 09/24/90 |
| ANALYTE | CRQL | | | | | | | |
| Phenol | 330 | 360 U | 350 U | 350 U | 370 U | 370 U | 340 U | 340 U |
| bis(2-Chloroethyl)ether | 330 | 360 U | 350 U | 350 U | 370 U | 370 U | 340 U | 340 U |
| 2-Chlorophenol | 330 | 360 U | 350 U | 350 U | 370 U | 370 U | 340 U | 340 U |
| 1,3-Dichlorobenzene | 330 | 360 U | 350 U | 350 U | 370 U | 370 U | 340 U | 340 U |
| 1,4-Dichlorobenzene | 330 | 360 U | 350 U | 350 U | 370 U | 370 U | 340 U | 340 U |
| Benzyl Alcohol | 330 | 360 U | 350 U | 350 U | 370 U | 370 U | 340 U | 340 U |
| 1,2-Dichlorobenzene | 330 | 360 U | 350 U | 350 U | 370 U | 370 U | 340 U | 340 U |
| 2-Methylphenol | 330 | 360 U | 350 U | 350 U | 370 U | 370 U | 340 U | 340 U |
| bis(2-Chloroisopropyl)ether | 330 | 360 U | 350 U | 350 U | 370 U | 370 U | 340 UJ | 340 UJ |
| 4-Methylphenol | 330 | 360 U | 350 U | 350 U | 370 U | 370 U | 340 U | 340 U |
| N-Nitroso-di-n-propylamine | 330 | 360 U | 350 U | 350 U | 370 U | 370 U | 340 U | 340 U |
| Hexachloroethane | 330 | 360 U | 350 U | 350 U | 370 U | 370 U | 340 U | 340 U |
| Nitrobenzene | 330 | 360 U | 350 U | 350 U | 370 U | 370 U | 340 U | 340 U |
| Isophorone | 330 | 360 U | 350 U | 350 U | 370 U | 370 U | 340 U | 340 U |
| 2-Nitrophenol | 330 | 360 U | 350 U | 350 U | 370 U | 370 U | 340 U | 340 U |
| 2,4-Dimethylphenol | 330 | 360 U | 350 U | 350 U | 370 U | 370 U | 340 U | 340 U |
| Benzoic Acid | 1600 | 1800 U | 1700 U | 1700 U | 1800 U | 1800 U | 1600 U | 1700 U |
| bis(2-Chloroethoxy)methane | 330 | 360 U | 350 U | 350 U | 370 U | 370 U | 340 U | 340 U |
| 2,4-Dichlorophenol | 330 | 360 U | 350 U | 350 U | 370 U | 370 U | 340 U | 340 U |
| 1,2,4-Trichlorobenzene | 330 | 360 U | 350 U | 350 U | 370 U | 370 U | 340 U | 340 U |
| Naphthalene | 330 | 360 U | 350 U | 350 U | 370 U | 370 U | 340 U | 340 U |
| 4-Chloroaniline | 330 | 360 U | 350 U | 350 U | 370 U | 370 U | 340 U | 340 U |
| Hexachlorobutadiene | 330 | 360 U | 350 U | 350 U | 370 U | 370 U | 340 U | 340 U |
| 4-Chloro-3-Methylphenol | 330 | 360 U | 350 U | 350 U | 370 U | 370 U | 340 U | 340 U |
| 2-Methylnaphthalene | 330 | 360 U | 350 U | 350 U | 370 U | 370 U | 340 U | 340 U |
| Hexachlorocyclopentadiene | 330 | 360 U | 350 U | 350 U | 370 U | 370 U | 340 U | 340 U |
| 2,4,6-Trichlorophenol | 330 | 360 U | 350 U | 350 U | 370 U | 370 U | 340 U | 340 U |
| 2,4,5-Trichlorophenol | 1600 | 1800 U | 1700 U | 1700 U | 1800 U | 1800 U | 1600 U | 1700 U |
| 2-Chloronaphthalene | 330 | 360 U | 350 U | 350 U | 370 U | 370 U | 340 U | 340 U |
| 2-Nitroaniline | 1600 | 1800 U | 1700 U | 1700 U | 1800 U | 1800 U | 1600 U | 1700 U |
| Dimethylphthalate | 330 | 360 U | 350 U | 350 U | 370 U | 370 U | 340 U | 340 U |
| Acenaphthylene | 330 | 360 U | 350 U | 350 U | 370 U | 370 U | 340 U | 340 U |
| 2,6-Dinitrotoluene | 330 | 360 U | 350 U | 350 U | 370 U | 370 U | 340 U | 340 U |

Table 2
Validation / Summary Table

| SAMPLE LOCATION: | | 11PS11070201XX | 11PS11070501XX | 11PS11070701XX | 11PS11080101XX | 11PS11080201XX | 11PS11080601XX |
|---|---|---|---|---|---|---|---|
| LAB NUMBER: | | 370421 | 370424 | 370420 | 370435 | 370439 | 370438 |
| DATE SAMPLED: | | 09/17/90 | 09/17/90 | 09/17/90 | 09/18/90 | 09/18/90 | 09/18/90 |
| DATE EXTRACTED: | | 09/21/90 | 09/21/90 | 09/21/90 | 09/21/90 | 09/21/90 | 09/21/90 |
| DATE ANALYZED: | | 09/25/90 | 09/27/90 | 09/26/90 | 09/25/90 | 09/24/90 | 09/24/90 |
| ANALYTE | CRQL | | | | | | |
| 3-Nitroaniline | 1600 | 1700 U | 1700 U | 1800 U | 1800 U | 1600 U | 1700 U |
| Acenaphthene | 330 | 350 U | 350 U | 370 U | 370 U | 340 U | 340 U |
| 2,4-Dinitrophenol | 1600 | 1700 U | 1700 UJ | 1800 U | 1800 U | 1600 U | 1700 U |
| 4-Nitrophenol | 1600 | 1700 UJ | 1700 U | 1800 U | 1800 U | 1600 U | 1700 U |
| Dibenzofuran | 330 | 350 U | 350 U | 370 U | 370 U | 340 U | 340 U |
| 2,4-Dinitrotoluene | 330 | 350 U | 350 U | 370 U | 370 U | 340 U | 340 U |
| Diethylphthalate | 330 | 350 U | 350 U | 370 U | 370 U | 340 U | 340 U |
| 4-Chlorophenyl-phenylether | 330 | 350 U | 350 U | 370 U | 370 U | 340 U | 340 U |
| Fluorene | 330 | 350 U | 350 U | 370 U | 370 U | 340 U | 340 U |
| 4-Nitroaniline | 1600 | 1700 U | 1700 U | 1800 U | 1800 U | 1600 U | 1700 U |
| 4,6-Dinitro-2-methylphenol | 1600 | 1700 U | 1700 U | 1800 U | 1800 U | 1600 U | 1700 U |
| N-Nitrosodiphenylamine | 330 | 350 U | 350 U | 370 U | 370 U | 340 U | 340 U |
| 4-Bromophenyl-phenylether | 330 | 350 U | 350 U | 370 U | 370 U | 340 U | 340 U |
| Hexachlorobenzene | 330 | 350 U | 350 U | 370 U | 370 U | 340 U | 340 U |
| Pentachlorophenol | 1600 | 1700 U | 1700 U | 1800 U | 1800 U | 1600 U | 1700 U |
| Phenanthrene | 330 | 350 U | 350 U | 370 U | 66 JJ | 340 U | 340 U |
| Anthracene | 330 | 350 U | 350 U | 370 U | 370 U | 340 U | 340 U |
| Di-n-butylphthalate | 330 | 350 U | 53 JJ | 370 U | 370 U | 340 U | 340 U |
| Fluoranthene | 330 | 350 U | 350 U | 370 U | 77 JJ | 340 U | 340 U |
| Pyrene | 330 | 350 U | 350 U | 370 U | 73 JJ | 340 U | 340 U |
| Butylbenzylphthalate | 330 | 350 U | 350 U | 370 U | 370 U | 340 U | 340 U |
| 3,3'-Dichlorobenzidine | 660 | 710 U | 710 U | 730 U | 730 U | 670 U | 690 U |
| Benzo(a)Anthracene | 330 | 350 U | 350 U | 370 U | 51 JJ | 340 U | 340 U |
| Chrysene | 330 | 350 U | 350 U | 370 U | 75 JJ | 340 U | 340 U |
| bis(2-Ethylhexyl)phthalate | 330 | 350 U | 350 U | 370 U | 370 U | 340 U | 340 U |
| Di-n-octylphthalate | 330 | 350 U | 350 U | 370 U | 370 U | 340 U | 340 U |
| Benzo(b)Fluoranthene | 330 | 43 JJX | 350 U | 370 U | 92 JJX | 340 U | 340 U |
| Benzo(k)Fluoranthene | 330 | 43 JJX | 350 U | 370 U | 92 JJX | 340 U | 340 U |
| Benzo(a)Pyrene | 330 | 350 U | 350 U | 370 U | 43 JJ | 340 U | 340 U |
| Indeno(1,2,3-c,d)Pyrene | 330 | 350 U | 350 U | 370 U | 370 U | 340 U | 340 U |
| Dibenz(a,h)Anthracene | 330 | 350 U | 350 U | 370 U | 370 U | 340 U | 340 U |
| Benzo(g,h,i)perylene | 330 | 350 U | 350 U | 370 U | 370 U | 340 U | 340 U |
| Dilution Factor: | | 1.0 | 1.0 | 1.0 | 1.0 | 1.0 | 1.0 |
| Percent Solids: | | 92 | 93 | 90 | 90 | 96 | 94 |
| Associated Method Blank: | | GH070910C22 | G2J71017A20 | G2J71017A20 | GH070856C20 | GH070859C20 | GH070859C20 |
| Associated Equipment Blank: | | - | - | - | - | - | - |
| Associated Field Blank: | | - | - | - | - | - | - |

Table 2
Validation / Summary Table

| SAMPLE LOCATION: | | 11MS304X2201XD | 11MS304X2201XX | 11MS304X3401XX | 11MS304X3801XX | 11PS11010001XX | 11PS11010101XX | 11PS11010501XX | 11PS11020301XX |
|---|---|---|---|---|---|---|---|---|---|
| LAB NUMBER: | | 371657 | 371658 | 371659 | 371660 | 370410 | 370411 | 370414 | 370412 |
| DATE SAMPLED: | | 09/27/90 | 09/27/90 | 09/27/90 | 09/27/90 | 09/18/90 | 09/18/90 | 09/18/90 | 09/17/90 |
| DATE EXTRACTED: | | 10/05/90 | 10/05/90 | 10/05/90 | 10/05/90 | 09/21/90 | 09/21/90 | 09/21/90 | 09/22/90 |
| DATE ANALYZED: | | 10/06/90 | 10/06/90 | 10/06/90 | 10/11/90 | 10/12/90 | 10/12/90 | 10/16/90 | 09/25/90 |
| ANALYTE | CRQL | | | | | | | | |
| alpha-BHC | 8 | 9.7 UJ | 9.9 UJ | 9.9 UJ | 10 UJ | 9.3 U | 10 U | 9.3 U | 11 U |
| beta-BHC | 8 | 9.7 UJ | 9.9 UJ | 9.9 UJ | 10 UJ | 9.3 U | 10 U | 9.3 U | 11 U |
| delta-BHC | 8 | 9.7 UJ | 9.9 UJ | 9.9 UJ | 10 UJ | 9.3 U | 10 U | 9.3 U | 11 U |
| gamma-BHC (Lindane) | 8 | 9.7 UJ | 9.9 UJ | 9.9 UJ | 10 UJ | 9.3 U | 10 U | 9.3 U | 11 U |
| Heptachlor | 8 | 9.7 UJ | 9.9 UJ | 9.9 UJ | 10 UJ | 9.3 U | 59 | 9.3 U | 11 U |
| Aldrin | 8 | 9.7 UJ | 9.9 UJ | 9.9 UJ | 10 UJ | 9.3 U | 10 U | 9.3 U | 11 U |
| Heptachlor Epoxide | 8 | 9.7 UJ | 9.9 UJ | 9.9 UJ | 10 UJ | 9.3 U | 10 U | 9.3 U | 11 U |
| Endosulfan I | 8 | 9.7 UJ | 9.9 UJ | 9.9 UJ | 10 UJ | 9.3 U | 10 U | 9.3 U | 11 U |
| Dieldrin | 16 | 19 UJ | 20 UJ | 20 UJ | 21 UJ | 19 U | 21 U | 19 U | 22 U |
| 4,4'-DDE | 16 | 19 UJ | 20 UJ | 20 UJ | 21 UJ | 19 U | 21 U | 19 U | 22 U |
| Endrin | 16 | 19 UJ | 20 UJ | 20 UJ | 21 UJ | 19 U | 21 U | 19 U | 22 U |
| Endosulfan II | 16 | 19 UJ | 20 UJ | 20 UJ | 21 UJ | 19 U | 34 | 19 U | 22 U |
| 4,4'-DDD | 16 | 19 UJ | 20 UJ | 20 UJ | 21 UJ | 19 U | 21 U | 19 U | 22 U |
| Endosulfan Sulfate | 16 | 19 UJ | 20 UJ | 20 UJ | 21 UJ | 19 U | 21 U | 19 U | 22 U |
| 4,4'-DDT | 16 | 19 UJ | 20 UJ | 20 UJ | 21 UJ | 19 U | 21 U | 19 U | 22 U |
| Methoxychlor | 80 | 97 UJ | 99 UJ | 99 UJ | 100 UJ | 93 U | 100 U | 93 U | 110 U |
| Endrin Ketone | 16 | 19 UJ | 20 UJ | 20 UJ | 21 UJ | 19 U | 21 U | 19 U | 22 U |
| alpha-Chlordane | 80 | 97 UJ | 99 UJ | 99 UJ | 100 UJ | 93 U | 100 U | 93 U | 110 U |
| gamma-Chlordane | 80 | 97 UJ | 99 UJ | 99 UJ | 100 UJ | 93 U | 100 U | 93 U | 110 U |
| Toxaphene | 160 | 190 UJ | 200 UJ | 200 UJ | 210 UJ | 190 U | 210 U | 190 U | 220 U |
| Aroclor-1016 | 80 | 97 UJ | 99 UJ | 99 UJ | 100 UJ | 93 U | 100 U | 93 U | 110 U |
| Aroclor-1221 | 80 | 97 UJ | 99 UJ | 99 UJ | 100 UJ | 93 U | 100 U | 93 U | 110 U |
| Aroclor-1232 | 80 | 97 UJ | 99 UJ | 99 UJ | 100 UJ | 93 U | 100 U | 93 U | 110 U |
| Aroclor-1242 | 80 | 97 UJ | 99 UJ | 99 UJ | 100 UJ | 93 U | 100 U | 93 U | 110 U |
| Aroclor-1248 | 80 | 97 UJ | 99 UJ | 99 UJ | 100 UJ | 93 U | 100 U | 93 U | 110 U |
| Aroclor-1254 | 160 | 190 UJ | 200 UJ | 200 UJ | 210 UJ | 190 U | 210 U | 190 U | 220 U |
| Aroclor-1260 | 160 | 190 UJ | 200 UJ | 200 UJ | 210 UJ | 190 U | 210 U | 190 U | 220 U |
| Dilution Factor: | | 1.0 | 1.0 | 1.0 | 1.0 | 1.0 | 1.0 | 1.0 | 1.0 |
| Percent Solids: | | 81 | 80 | 80 | 75 | 85 | 77 | 86 | 74 |
| Associated Method Blank: | | 372592 | 372592 | 372592 | 372592 | 370975 | 370975 | 370975 | 371048 |
| Associated Equipment Blank: | | - | - | - | - | - | - | - | - |
| Associated Field Blank: | | - | - | - | - | - | - | - | - |

Table 2
Validation / Summary Table

| SAMPLE LOCATION: | | 11PS11020401XX | 11PS11020601XX | 11PS11030101XX | 11PS11030201XX | 11PS11030601XX | 11PS11040101XX | 11PS11040201XX | 11PS11040701XX |
|---|---|---|---|---|---|---|---|---|---|
| LAB NUMBER: | | 370409 | 370417 | 370413 | 370415 | 370416 | 370408 | 370389 | 370407 |
| DATE SAMPLED: | | 09/17/90 | 09/17/90 | 09/18/90 | 09/18/90 | 09/18/90 | 09/17/90 | 09/17/90 | 09/17/90 |
| DATE EXTRACTED: | | 09/21/90 | 09/21/90 | 09/21/90 | 09/21/90 | 09/21/90 | 09/21/90 | 09/21/90 | 09/21/90 |
| DATE ANALYZED: | | 10/12/90 | 10/12/90 | 10/12/90 | 10/12/90 | 10/17/90 | 10/04/90 | 09/27/90 | 09/27/90 |
| ANALYTE | CRQL | | | | | | | | |
| alpha-BHC | 8 | 8.6 U | 8.4 U | 9.2 U | 8.6 U | 8.9 U | 8.1 U | 8.1 U | 8.4 U |
| beta-BHC | 8 | 8.6 U | 8.4 U | 9.2 U | 8.6 U | 8.9 U | 8.1 U | 8.1 U | 8.4 U |
| delta-BHC | 8 | 8.6 U | 8.4 U | 9.2 U | 8.6 U | 8.9 U | 8.1 U | 8.1 U | 8.4 U |
| gamma-BHC (Lindane) | 8 | 8.6 U | 38 | 9.2 U | 8.6 U | 8.9 U | 8.1 U | 8.1 U | 8.4 U |
| Heptachlor | 8 | 8.6 U | 8.4 U | 9.2 U | 8.6 U | 8.9 U | 8.1 U | 8.1 U | 8.4 U |
| Aldrin | 8 | 8.6 U | 8.4 U | 9.2 U | 8.6 U | 8.9 U | 8.1 U | 8.1 U | 8.4 U |
| Heptachlor Epoxide | 8 | 8.6 U | 8.4 U | 9.2 U | 8.6 U | 8.9 U | 8.1 U | 8.1 U | 8.4 U |
| Endosulfan I | 8 | 8.6 U | 8.4 U | 9.2 U | 8.6 U | 8.9 U | 8.1 U | 8.1 U | 8.4 U |
| Dieldrin | 16 | 17 U | 17 U | 18 U | 17 U | 18 U | 16 U | 16 U | 17 U |
| 4,4'-DDE | 16 | 17 U | 17 U | 18 U | 17 U | 18 U | 16 U | 16 U | 17 U |
| Endrin | 16 | 17 U | 17 U | 18 U | 17 U | 18 U | 16 U | 16 U | 17 U |
| Endosulfan II | 16 | 17 U | 17 U | 18 U | 17 U | 18 U | 16 U | 16 U | 17 U |
| 4,4'-DDD | 16 | 17 U | 17 U | 18 U | 17 U | 18 U | 16 U | 16 U | 17 U |
| Endosulfan Sulfate | 16 | 17 U | 17 U | 18 U | 17 U | 18 U | 16 U | 16 U | 17 U |
| 4,4'-DDT | 16 | 17 U | 17 U | 18 U | 17 U | 18 U | 16 U | 16 U | 17 U |
| Methoxychlor | 80 | 86 U | 84 U | 92 U | 86 U | 89 U | 81 U | 81 U | 84 U |
| Endrin Ketone | 16 | 17 U | 17 U | 18 U | 17 U | 18 U | 16 U | 16 U | 17 U |
| alpha-Chlordane | 80 | 86 U | 84 U | 92 U | 86 U | 89 U | 81 U | 81 U | 84 U |
| gamma-Chlordane | 80 | 86 U | 84 U | 92 U | 86 U | 89 U | 81 U | 81 U | 84 U |
| Toxaphene | 160 | 170 U | 170 U | 180 U | 170 U | 180 U | 160 U | 160 U | 170 U |
| Aroclor-1016 | 80 | 86 U | 84 U | 92 U | 86 U | 89 U | 81 U | 81 U | 84 U |
| Aroclor-1221 | 80 | 86 U | 84 U | 92 U | 86 U | 89 U | 81 U | 81 U | 84 U |
| Aroclor-1232 | 80 | 86 U | 84 U | 92 U | 86 U | 89 U | 81 U | 81 U | 84 U |
| Aroclor-1242 | 80 | 86 U | 84 U | 92 U | 86 U | 89 U | 81 U | 81 U | 84 U |
| Aroclor-1248 | 80 | 86 U | 84 U | 92 U | 86 U | 89 U | 81 U | 81 U | 84 U |
| Aroclor-1254 | 160 | 170 U | 170 U | 180 U | 170 U | 180 U | 160 U | 160 U | 170 U |
| Aroclor-1260 | 160 | 170 U | 170 U | 180 U | 170 U | 180 U | 160 U | 160 U | 170 U |
| Dilution Factor: | | 1.0 | 1.0 | 1.0 | 1.0 | 1.0 | 1.0 | 1.0 | 1.0 |
| Percent Solids: | | 93 | 95 | 86 | 93 | 89 | 98 | 98 | 95 |
| Associated Method Blank: | | 370975 | 370975 | 370975 | 370975 | 370975 | 370910 | 370910 | 370910 |
| Associated Equipment Blank: | | - | - | - | - | - | - | - | - |
| Associated Field Blank: | | - | - | - | - | - | - | - | - |

Table 2
Validation / Summary Table

| SAMPLE LOCATION: | | 11PS11050101XX | 11PS11050201XX | 11PS11050501XX | 11PS11060101XD | 11PS11060101XX | 11PS11060201XX | 11PS11060601XX | 11PS11070201XD |
|---|---|---|---|---|---|---|---|---|---|
| LAB NUMBER: | | 370426 | 370440 | 370430 | 370425 | 370419 | 370418 | 370423 | 370422 |
| DATE SAMPLED: | | 09/18/90 | 09/18/90 | 09/18/90 | 09/17/90 | 09/17/90 | 09/17/90 | 09/17/90 | 09/17/90 |
| DATE EXTRACTED: | | 09/21/90 | 09/21/90 | 09/21/90 | 09/21/90 | 09/21/90 | 09/21/90 | 09/21/90 | 09/21/90 |
| DATE ANALYZED: | | 10/03/90 | 09/25/90 | 09/27/90 | 10/05/90 | 09/27/90 | 10/03/90 | 10/03/90 | 10/03/90 |
| ANALYTE | CRQL | | | | | | | | |
| alpha-BHC | 8 | 9.6 U | 8.9 U | 8.5 U | 8.4 U | 8.5 U | 9 U | 9.1 U | 8.8 U |
| beta-BHC | 8 | 9.6 U | 8.9 U | 8.5 U | 8.4 U | 8.5 U | 9 U | 9.1 U | 8.8 U |
| delta-BHC | 8 | 9.6 U | 8.9 U | 8.5 U | 8.4 U | 8.5 U | 9 U | 9.1 U | 8.8 U |
| gamma-BHC (Lindane) | 8 | 9.6 U | 8.9 U | 8.5 U | 8.4 U | 8.5 U | 9 U | 9.1 U | 8.8 U |
| Heptachlor | 8 | 9.6 U | 8.9 U | 8.5 U | 8.4 U | 8.5 U | 9 U | 9.1 U | 8.8 U |
| Aldrin | 8 | 9.6 U | 8.9 U | 8.5 U | 8.4 U | 8.5 U | 9 U | 9.1 U | 8.8 U |
| Heptachlor Epoxide | 8 | 9.6 U | 8.9 U | 8.5 U | 8.4 U | 8.5 U | 9 U | 9.1 U | 8.8 U |
| Endosulfan I | 8 | 9.6 U | 8.9 U | 8.5 U | 8.4 U | 8.5 U | 9 U | 9.1 U | 8.8 U |
| Dieldrin | 16 | 19 U | 18 U | 17 U | 17 U | 17 U | 18 U | 18 U | 18 U |
| 4,4'-DDE | 16 | 19 U | 18 U | 17 U | 17 U | 17 U | 18 U | 18 U | 20 |
| Endrin | 16 | 19 U | 18 U | 17 U | 17 U | 17 U | 18 U | 18 U | 18 U |
| Endosulfan II | 16 | 19 U | 18 U | 17 U | 17 U | 17 U | 18 U | 18 U | 18 U |
| 4,4'-DDD | 16 | 19 U | 18 U | 17 U | 17 U | 17 U | 18 U | 18 U | 18 U |
| Endosulfan Sulfate | 16 | 19 U | 18 U | 17 U | 17 U | 17 U | 18 U | 18 U | 18 U |
| 4,4'-DDT | 16 | 19 U | 18 U | 17 U | 17 U | 17 U | 18 U | 18 U | 18 U |
| Methoxychlor | 80 | 96 U | 89 U | 85 U | 84 U | 85 U | 90 U | 91 U | 88 U |
| Endrin Ketone | 16 | 19 U | 18 U | 17 U | 17 U | 17 U | 18 U | 18 U | 18 U |
| alpha-Chlordane | 80 | 96 U | 89 U | 85 U | 84 U | 85 U | 90 U | 91 U | 88 U |
| gamma-Chlordane | 80 | 96 U | 89 U | 85 U | 84 U | 85 U | 90 U | 91 U | 88 U |
| Toxaphene | 160 | 190 U | 180 U | 170 U | 170 U | 170 U | 180 U | 180 U | 180 U |
| Aroclor-1016 | 80 | 96 U | 89 U | 85 U | 84 U | 85 U | 90 U | 91 U | 88 U |
| Aroclor-1221 | 80 | 96 U | 89 U | 85 U | 84 U | 85 U | 90 U | 91 U | 88 U |
| Aroclor-1232 | 80 | 96 U | 89 U | 85 U | 84 U | 85 U | 90 U | 91 U | 88 U |
| Aroclor-1242 | 80 | 96 U | 89 U | 85 U | 84 U | 85 U | 90 U | 91 U | 88 U |
| Aroclor-1248 | 80 | 96 U | 89 U | 85 U | 84 U | 85 U | 90 U | 91 U | 88 U |
| Aroclor-1254 | 160 | 190 U | 180 U | 170 U | 1700 J | 8800 CJ | 180 U | 180 U | 180 U |
| Aroclor-1260 | 160 | 190 U | 180 U | 170 U | 170 U | 170 U | 180 U | 180 U | 180 U |
| Dilution Factor: | | 1.0 | 1.0 | 1.0 | 1.0 | 1.0 | 1.0 | 1.0 | 1.0 |
| Percent Solids: | | 83 | 88 | 94 | 95 | 94 | 89 | 88 | 91 |
| Associated Method Blank: | | 370856 | 370859 | 370856 | 371017 | 370975 | 371017 | 371017 | 371017 |
| Associated Equipment Blank: | | - | - | - | - | - | - | - | - |
| Associated Field Blank: | | - | - | - | - | - | - | - | - |

Table 2
Validation / Summary Table

| SAMPLE LOCATION: | 11PS11070201XX | 11PS11070501XX | 11PS11070701XX | 11PS11080101XX | 11PS11080201XX | 11PS11080601XX |
|---|---|---|---|---|---|---|
| LAB NUMBER: | 370421 | 370424 | 370420 | 370435 | 370439 | 370438 |
| DATE SAMPLED: | 09/17/90 | 09/17/90 | 09/17/90 | 09/18/90 | 09/18/90 | 09/18/90 |
| DATE EXTRACTED: | 09/21/90 | 09/21/90 | 09/21/90 | 09/21/90 | 09/21/90 | 09/21/90 |
| DATE ANALYZED: | 10/03/90 | 09/21/90 | 10/03/90 | 09/27/90 | 09/25/90 | 10/03/90 |
| ANALYTE / CRQL | | | | | | |
| alpha-BHC / 8 | 8.6 U | 8.6 U | 8.9 U | 8.9 U | 8.1 U | 8.3 U |
| beta-BHC / 8 | 8.6 U | 8.6 U | 8.9 U | 8.9 U | 8.1 U | 8.3 U |
| delta-BHC / 8 | 8.6 U | 8.6 U | 8.9 U | 8.9 U | 8.1 U | 8.3 U |
| gamma-BHC (Lindane) / 8 | 8.6 U | 8.6 U | 8.9 U | 8.9 U | 8.1 U | 8.3 U |
| Heptachlor / 8 | 8.6 U | 8.6 U | 8.9 U | 8.9 U | 8.1 U | 8.3 U |
| Aldrin / 8 | 8.6 U | 8.6 U | 8.9 U | 8.9 U | 8.1 U | 8.3 U |
| Heptachlor Epoxide / 8 | 8.6 U | 8.6 U | 8.9 U | 8.9 U | 8.1 U | 8.3 U |
| Endosulfan I / 8 | 8.6 U | 8.6 U | 8.9 U | 8.9 U | 8.1 U | 8.3 U |
| Dieldrin / 16 | 17 U | 17 U | 18 U | 18 U | 16 U | 17 U |
| 4,4'-DDE / 16 | 17 U | 17 U | 18 U | 18 U | 16 U | 17 U |
| Endrin / 16 | 17 U | 17 U | 18 U | 18 U | 16 U | 17 U |
| Endosulfan II / 16 | 17 U | 17 U | 18 U | 18 U | 16 U | 17 U |
| 4,4'-DDD / 16 | 17 U | 17 U | 18 U | 18 U | 16 U | 17 U |
| Endosulfan Sulfate / 16 | 17 U | 17 U | 18 U | 18 U | 16 U | 17 U |
| 4,4'-DDT / 16 | 17 U | 17 U | 18 U | 18 U | 16 U | 17 U |
| Methoxychlor / 80 | 86 U | 86 U | 89 U | 89 U | 81 U | 83 U |
| Endrin Ketone / 16 | 17 U | 17 U | 18 U | 18 U | 16 U | 17 U |
| alpha-Chlordane / 80 | 86 U | 86 U | 89 U | 89 U | 81 U | 83 U |
| gamma-Chlordane / 80 | 86 U | 86 U | 89 U | 89 U | 81 U | 83 U |
| Toxaphene / 160 | 170 U | 170 U | 180 U | 180 U | 160 U | 170 U |
| Aroclor-1016 / 80 | 86 U | 86 U | 89 U | 89 U | 81 U | 83 U |
| Aroclor-1221 / 80 | 86 U | 86 U | 89 U | 89 U | 81 U | 83 U |
| Aroclor-1232 / 80 | 86 U | 86 U | 89 U | 89 U | 81 U | 83 U |
| Aroclor-1242 / 80 | 86 U | 86 U | 89 U | 89 U | 81 U | 83 U |
| Aroclor-1248 / 80 | 86 U | 86 U | 89 U | 89 U | 81 U | 83 U |
| Aroclor-1254 / 160 | 170 U | 170 U | 180 U | 180 U | 160 U | 170 U |
| Aroclor-1260 / 160 | 170 U | 170 U | 180 U | 180 U | 160 U | 170 U |
| Dilution Factor: | 1.0 | 1.0 | 1.0 | 1.0 | 1.0 | 1.0 |
| Percent Solids: | 92 | 93 | 90 | 90 | 96 | 94 |
| Associated Method Blank: | 370910 | 371017 | 371017 | 370856 | 370859 | 370859 |
| Associated Equipment Blank: | - | - | - | - | - | - |
| Associated Field Blank: | - | - | - | - | - | - |

Table 2
Validation / Summary Table

| SAMPLE LOCATION: | 11PS11010001XX | 11PS11010101XX | 11PS11010501XX | 11PS11020401XX | 11PS11020601XX | 11PS11030101XX | 11PS11030201XX |
|---|---|---|---|---|---|---|---|
| LAB NUMBER: | 370497 | 370498 | 370501 | 370496 | 370504 | 370500 | 370502 |
| DATE SAMPLED: | 09/18/90 | 09/18/90 | 09/18/90 | 09/17/90 | 09/17/90 | 09/18/90 | 09/18/90 |
| ANALYTE / CRQL | | | | | | | |
| Aluminum 40 | 10200 | 5160 | 8710 | 3770 | 5030 | 10200 | 8640 |
| Antimony 12 | 6.9 UJ | 7.8 UJ | 6.8 UJ | 6.4 UJ | 6.3 UJ | 6.5 UJ | 6.4 UJ |
| Arsenic 2 | 1.2 []J | 1.6 []J | 1.3 [] | 0.85 [] | 1.0 [] | 2.2 UJ | 1.1 [] |
| Barium 40 | 13.3 [] | 24.0 [] | 24.5 [] | 16.5 [] | 20.1 [] | 38.2 [] | 12.5 [] |
| Beryllium 1 | 0.37 U | 0.26 U | 0.52 U | 0.21 U | 0.27 U | 0.36 U | 0.42 U |
| Cadmium 1 | 1.6 | 2.2 | 0.68 U | 0.64 U | 0.63 U | 0.65 U | 0.64 U |
| Calcium 1000 | 347 [] | 528 [] | 794 [] | 599 [] | 887 [] | 675 [] | 376 [] |
| Chromium 2 | 9.3 J | 7.0 J | 13.8 J | 5.6 J | 9.5 J | 8.6 J | 10.4 J |
| Cobalt 10 | 4.0 U | 2.1 U | 7.5 U | 3.4 U | 6.0 U | 3.7 U | 5.9 U |
| Copper 5 | 8.6 | 16.0 | 9.4 | 5.2 [] | 6.1 | 12.4 | 7.3 |
| Iron 20 | 7890 | 6540 | 10900 | 5960 | 7930 | 8050 | 9460 |
| Lead 0.6 | 289 J | 378 J | 4.0 J | 3.5 J | 5.6 J | 0.99 J | 3.7 J |
| Magnesium 1000 | 1140 [] | 450 [] | 3410 | 1690 | 2510 | 855 [] | 2010 |
| Manganese 3 | 58.5 | 68.0 | 134 | 73.7 | 106 | 53.2 | 94.7 |
| Mercury 0.1 | 0.23 J | 0.13 UJ | 0.12 UJ | 0.11 UJ | 0.11 UJ | 0.11 UJ | 0.11 UJ |
| Nickel 8 | 5.6 [] | 3.9 [] | 10.8 | 5.5 [] | 8.4 [] | 4.4 [] | 9.5 |
| Potassium 1000 | 453 [] | 304 [] | 1950 | 1100 | 1560 | 534 [] | 878 [] |
| Selenium 1 | 3.5 UJ | 0.76 UJ | 0.67 UJ | 0.64 UJ | 0.62 UJ | 1.3 UJ | 1.3 UJ |
| Silver 2 | 1.6 U | 1.8 U | 1.6 U | 1.5 U | 1.5 U | 1.5 U | 1.5 U |
| Sodium 1000 | 121 [] | 106 [] | 158 [] | 103 [] | 153 [] | 109 [] | 98.7 [] |
| Thallium 2 | 1.9 UR | 2.0 UR | 1.8 UR | 1.7 UR | 1.7 []J | 1.8 UR | 1.7 UR |
| Vanadium 10 | 16.3 | 15.4 | 20.5 | 10.2 [] | 16.4 | 18.1 | 16.9 |
| Zinc 4 | 33.2 J | 48.5 J | 27.5 J | 15.7 J | 20.4 J | 14.0 J | 22.2 J |
| Cyanide 1 | 0.58 U | 0.65 U | 0.58 U | 0.54 U | 0.53 U | 0.56 U | 0.54 U |
| Percent Solids: | 86 | 77 | 87 | 93 | 95 | 89 | 93 |
| Associated Method Blank: | BR18551S2 | BR18551S2 | BR18551S2 | BR18551S2 | BR18551S2 | BR18551S2 | BR18551S2 |
| Associated Equipment Blank: | - | - | - | - | - | - | - |
| Associated Field Blank: | - | - | - | - | - | - | - |

Table 2
Validation / Summary Table

| SAMPLE LOCATION: | 11MS304X2201XX | | 11MS304X3401XX | | 11MS304X3801XX | | 11PS11020301XX | |
|---|---|---|---|---|---|---|---|---|
| LAB NUMBER: | 371663 | | 371666 | | 371667 | | 370499 | |
| DATE SAMPLED: | 09/27/90 | | 09/27/90 | | 09/27/90 | | 09/17/90 | |
| ANALYTE | CRQL | | | | | | | |
| Aluminum | 40 | 4630 | J | 4640 | J | 28300 | J | 5950 | J |
| Antimony | 12 | 7.5 | UJ | 7.5 | UJ | 8.0 | UJ | 8.1 | UJ |
| Arsenic | 2 | 0.90 | U | 1.0 | UJ | 14.0 | | 4.7 | |
| Barium | 40 | 16.8 | [] | 17.6 | [] | 83.4 | | 94.1 | |
| Beryllium | 1 | 0.26 | [] | 0.26 | [] | 0.84 | [] | 0.34 | [] |
| Cadmium | 1 | 0.75 | U | 0.75 | U | 0.80 | U | 2.9 | |
| Calcium | 1000 | 1130 | [] | 880 | [] | 4190 | J | 1060 | [] |
| Chromium | 2 | 9.0 | | 7.9 | | 56.0 | J | 11.7 | |
| Cobalt | 10 | 3.8 | [] | 3.7 | [] | 22.7 | J | 6.7 | [] |
| Copper | 5 | 6.5 | UJ | 5.5 | UJ | 35.3 | J | 34.3 | J |
| Iron | 20 | 7580 | | 7220 | | 44700 | | 8350 | |
| Lead | 0.6 | 2.5 | J | 2.5 | J | 17.2 | J | 434 | J |
| Magnesium | 1000 | 2070 | | 2130 | | 13600 | J | 2470 | |
| Manganese | 3 | 105 | | 91.1 | | 803 | J | 104 | |
| Mercury | 0.1 | 0.12 | UJ | 0.13 | UJ | 0.13 | UJ | 0.13 | UJ |
| Nickel | 8 | 6.9 | [] | 6.8 | [] | 52.6 | | 19.1 | |
| Potassium | 1000 | 1210 | [] | 1170 | [] | 6380 | | 1310 | [] |
| Selenium | 1 | 0.75 | UJ | 0.75 | UJ | 0.80 | UJ | 0.81 | UJ |
| Silver | 2 | 1.8 | U | 1.8 | U | 1.9 | U | 1.9 | U |
| Sodium | 1000 | 197 | [] | 176 | [] | 480 | [] | 325 | [] |
| Thallium | 2 | 0.50 | U | 0.50 | U | 0.53 | U | 0.54 | U |
| Vanadium | 10 | 13.7 | | 12.8 | | 64.8 | J | 54.9 | |
| Zinc | 4 | 17.3 | | 17.6 | | 94.2 | | 54.2 | |
| Cyanide | 1 | 0.62 | U | 0.63 | U | 0.66 | U | 0.67 | U |
| Percent Solids: | | 80 | | 80 | | 75 | | 74 | |
| Associated Method Blank: | | BN135888S | | BN135888S | | BN135888S | | BN135888S | |
| Associated Equipment Blank: | | - | | - | | - | | - | |
| Associated Field Blank: | | - | | - | | - | | - | |

Table 2
Validation / Summary Table

| SAMPLE LOCATION: | 11PS11050101XX | | 11PS11050201XX | |
|---|---|---|---|---|
| LAB NUMBER: | 370525 | | 370542 | |
| DATE SAMPLED: | 09/18/90 | | 09/18/90 | |
| ANALYTE | CRQL | | | |
| Aluminum | 40 | 6270 | 12900 | |
| Antimony | 12 | 7.2 UJ | 6.8 UJ | |
| Arsenic | 2 | 1.3 []J | 0.45 UJ | |
| Barium | 40 | 13.5 [] | 10.6 [] | |
| Beryllium | 1 | 0.28 [] | 0.41 [] | |
| Cadmium | 1 | 0.72 U | 0.68 U | |
| Calcium | 1000 | 402 []J | 256 []J | |
| Chromium | 2 | 7.8 | 10.7 | |
| Cobalt | 10 | 2.0 [] | 3.5 [] | |
| Copper | 5 | 5.4 U | 3.0 U | |
| Iron | 20 | 7390 | 11600 | |
| Lead | 0.6 | 8.4 J | 5.5 J | |
| Magnesium | 1000 | 573 [] | 861 [] | |
| Manganese | 3 | 72.3 | 127 | |
| Mercury | 0.1 | 0.12 U | 0.11 U | |
| Nickel | 8 | 4.0 [] | 3.5 [] | |
| Potassium | 1000 | 371 [] | 388 [] | |
| Selenium | 1 | 0.72 UR | 3.4 UR | |
| Silver | 2 | 1.7 U | 1.6 U | |
| Sodium | 1000 | 124 [] | 120 [] | |
| Thallium | 2 | 0.48 U | 0.45 U | |
| Vanadium | 10 | 13.3 | 20.3 | |
| Zinc | 4 | 15.2 | 17.7 | |
| Cyanide | 1 | 0.60 U | 0.56 U | |
| Percent Solids: | | 83 | 89 | |
| Associated Method Blank: | | BR18551S | BR18551S | |
| Associated Equipment Blank: | | - | - | |
| Associated Field Blank: | | - | - | |

Table 2
Validation / Summary Table

SAMPLE LOCATION: 11MS304X2201XD
LAB NUMBER: 371661
DATE SAMPLED: 09/27/90

| ANALYTE | CRQL | | |
|---|---|---|---|
| Aluminum | 40 | 5180 | J |
| Antimony | 12 | 7.4 | UJ |
| Arsenic | 2 | 1.2 | U |
| Barium | 40 | 20.7 | [] |
| Beryllium | 1 | 0.28 | [] |
| Cadmium | 1 | 0.74 | U |
| Calcium | 1000 | 1020 | [] |
| Chromium | 2 | 8.7 | |
| Cobalt | 10 | 3.9 | [] |
| Copper | 5 | 7.1 | UJ |
| Iron | 20 | 8280 | |
| Lead | 0.6 | 2.4 | J |
| Magnesium | 1000 | 2330 | |
| Manganese | 3 | 110 | |
| Mercury | 0.1 | 0.12 | UJ |
| Nickel | 8 | 7.2 | [] |
| Potassium | 1000 | 1380 | |
| Selenium | 1 | 0.74 | UJ |
| Silver | 2 | 1.7 | U |
| Sodium | 1000 | 175 | [] |
| Thallium | 2 | 0.49 | U |
| Vanadium | 10 | 15.3 | |
| Zinc | 4 | 19.3 | |
| Cyanide | 1 | 0.61 | U |
| Percent Solids: | | 81 | |

Associated Method Blank: BN135888S
Associated Equipment Blank: -
Associated Field Blank: -

Table 2
Validation / Summary Table

| SAMPLE LOCATION: | 11PS11030601XX | 11PS11040101XX | 11PS11040201XX | 11PS11040701XX | 11PS11060101XD | 11PS11060101XX | 11PS11060201XX | 11PS11060601XX |
|---|---|---|---|---|---|---|---|---|
| LAB NUMBER: | 370503 | 370495 | 370399 | 370494 | 370524 | 370507 | 370505 | 370516 |
| DATE SAMPLED: | 09/18/90 | 09/17/90 | 09/17/90 | 09/17/90 | 09/17/90 | 09/17/90 | 09/17/90 | 09/17/90 |
| ANALYTE / CRQL | | | | | | | | |
| Aluminum 40 | 8910 | 14900 | 6840 | 3690 | 11200 | 13300 | 5450 | 5280 |
| Antimony 12 | 6.5 UJ | 6.1 UJ | 6.1 UJ | 6.3 UJ | 6.1 UJ | 6.4 UJ | 6.5 UJ | 6.8 UJ |
| Arsenic 2 | 1.3 [] | 0.69 []J | 1.1 []J | 1.3 []J | 0.92 []J | 0.94 []J | 1.3 [] | 1.1 []J |
| Barium 40 | 35.3 [] | 412 | 10.0 [] | 11.3 [] | 342 | 400 | 14.4 [] | 18.3 [] |
| Beryllium 1 | 0.39 U | 0.20 U | 0.33 U | 0.21 U | 0.22 U | 0.23 U | 0.44 U | 0.27 U |
| Cadmium 1 | 0.65 U | 0.61 U | 0.61 U | 0.63 U | 1.6 | 0.73 [] | 0.65 U | 0.68 U |
| Calcium 1000 | 925 [] | 1640 | 488 [] | 1040 [] | 1500 | 1690 | 821 [] | 1110 [] |
| Chromium 2 | 15.4 J | 21.2 J | 7.6 J | 5.9 J | 91.8 J | 53.4 J | 7.7 J | 8.4 J |
| Cobalt 10 | 7.8 U | 16.8 | 4.2 U | 3.6 U | 12.5 | 15.0 | 4.5 U | 5.0 U |
| Copper 5 | 11.2 | 127 J | 5.8 | 6.6 | 77.0 J | 107 J | 7.0 | 8.0 |
| Iron 20 | 13600 | 30300 | 6890 | 6290 | 23200 | 27900 | 7610 | 7970 |
| Lead 0.6 | 3.8 J | 1.2 J | 2.5 J | 2.6 J | 202 J | 129 J | 4.1 J | 3.1 J |
| Magnesium 1000 | 3960 | 10700 | 1380 | 1560 | 7120 | 8830 | 1940 | 2220 |
| Manganese 3 | 166 | 689 J | 74.8 | 96.6 | 433 J | 516 J | 115 | 109 |
| Mercury 0.1 | 0.11 UJ | 0.10 UJ | 0.10 UJ | 0.10 UJ | 0.11 UJ | 0.11 UJ | 0.11 UJ | 0.11 UJ |
| Nickel 8 | 12.3 | 11.2 | 7.3 [] | 6.5 [] | 10.2 | 10.0 | 8.5 [] | 7.8 [] |
| Potassium 1000 | 2340 | 10600 | 563 [] | 1040 [] | 6360 | 8280 | 987 [] | 1340 |
| Selenium 1 | 1.3 UJ | 3.0 UJ | 3.1 UJ | 3.1 UJ | 3.1 UJ | 0.64 UJ | 0.67 UJ | 1.4 UJ |
| Silver 2 | 1.5 U | 1.4 U | 1.4 U | 1.5 U | 1.4 U | 1.5 U | 1.5 U | 1.6 U |
| Sodium 1000 | 163 [] | 194 [] | 101 [] | 142 [] | 180 [] | 191 [] | 107 [] | 151 [] |
| Thallium 2 | 1.8 UR | 1.6 UR | 1.6 UR | 1.7 UR | 1.7 UR | 1.7 UR | 1.8 UR | 1.8 UR |
| Vanadium 10 | 24.6 | 123 | 12.5 | 10.9 | 85.5 | 100 | 13.4 | 14.0 |
| Zinc 4 | 30.3 J | 68.7 J | 16.3 J | 15.4 | 233 J | 124 J | 17.1 J | 20.0 J |
| Cyanide 1 | 0.56 U | 0.51 U | 0.51 U | 0.52 U | 2.8 | 0.53 U | 0.56 U | 0.57 U |
| Percent Solids: | 89 | 98 | 98 | 95 | 95 | 94 | 89 | 88 |
| Associated Method Blank: | BR18551S2 | BR18551S2 | BR18551S2 | BR18551S2 | BR18551S2 | BR18551S2 | BR18551S2 | BR18551S2 |
| Associated Equipment Blank: | - | - | - | - | - | - | - | - |
| Associated Field Blank: | - | - | - | - | - | - | - | - |

Table 2
Validation / Summary Table

| SAMPLE LOCATION: | 11PS11070201XD | | 11PS11070201XX | | 11PS11070501XX | | 11PS11070701XX | |
|---|---|---|---|---|---|---|---|---|
| LAB NUMBER: | 370513 | | 370512 | | 370522 | | 370509 | |
| DATE SAMPLED: | 09/17/90 | | 09/17/90 | | 09/17/90 | | 09/17/90 | |
| ANALYTE | CRQL | | | | | | | |
| Aluminum | 40 | 7370 | | 7140 | | 5400 | | 3910 | |
| Antimony | 12 | 6.6 | UJ | 6.5 | UJ | 6.5 | UJ | 6.6 | UJ |
| Arsenic | 2 | 1.4 | [] | 0.91 | [] | 1.0 | [] | 1.6 | [] |
| Barium | 40 | 15.7 | [] | 16.7 | [] | 13.6 | [] | 12.0 | [] |
| Beryllium | 1 | 0.33 | U | 0.31 | U | 0.26 | U | 0.22 | U |
| Cadmium | 1 | 0.66 | U | 0.65 | U | 0.65 | U | 0.66 | U |
| Calcium | 1000 | 808 | [] | 950 | [] | 711 | [] | 918 | [] |
| Chromium | 2 | 7.0 | J | 7.2 | J | 7.3 | J | 5.8 | J |
| Cobalt | 10 | 3.7 | U | 3.5 | U | 4.1 | U | 4.2 | U |
| Copper | 5 | 7.2 | | 9.8 | | 5.3 | [] | 5.8 | |
| Iron | 20 | 7090 | | 6890 | | 7490 | | 6550 | |
| Lead | 0.6 | 1.3 | J | 0.83 | J | 2.1 | J | 2.6 | J |
| Magnesium | 1000 | 1040 | [] | 1020 | [] | 1840 | | 1590 | |
| Manganese | 3 | 97.0 | | 105 | | 80.2 | | 96.8 | |
| Mercury | 0.1 | 1.1 | J | 0.11 | UJ | 0.11 | UJ | 0.11 | UJ |
| Nickel | 8 | 5.1 | [] | 4.7 | [] | 6.5 | [] | 5.7 | [] |
| Potassium | 1000 | 547 | [] | 620 | [] | 1160 | | 1060 | [] |
| Selenium | 1 | 1.3 | UJ | 0.65 | UJ | 1.3 | UJ | 0.66 | UJ |
| Silver | 2 | 1.5 | U | 1.5 | U | 1.5 | U | 1.5 | U |
| Sodium | 1000 | 99.4 | [] | 127 | [] | 131 | [] | 126 | [] |
| Thallium | 2 | 1.7 | UR | 1.7 | UR | 1.7 | UR | 1.8 | UR |
| Vanadium | 10 | 12.7 | | 13.1 | | 13.3 | | 10.3 | [] |
| Zinc | 4 | 24.2 | | 26.2 | J | 17.2 | J | 15.9 | J |
| Cyanide | 1 | 0.55 | U | 0.54 | U | 0.54 | U | 1.4 | |
| Percent Solids: | | 92 | | 92 | | 93 | | 91 | |
| Associated Method Blank: | | BR18551S2 | | BR18551S2 | | BR18551S2 | | BR18551S2 | |
| Associated Equipment Blank: | | - | | - | | - | | - | |
| Associated Field Blank: | | - | | - | | - | | - | |

Table 2
Validation / Summary Table

| SAMPLE LOCATION: | 11PS11050501XX | | 11PS11060101XD | | 11PS11080201XX | | 11PS11080601XX | |
|---|---|---|---|---|---|---|---|---|
| LAB NUMBER: | 370532 | | 370524 | | 370541 | | 370540 | |
| DATE SAMPLED: | 09/18/90 | | 09/17/90 | | 09/18/90 | | 09/18/90 | |
| ANALYTE | CRQL | | | | | | | |
| Aluminum | 40 | 6660 | | 11200 | | 7120 | | 5330 | |
| Antimony | 12 | 6.4 | UJ | 6.1 | UJ | 6.2 | UJ | 6.4 | UJ |
| Arsenic | 2 | 0.69 | []J | 0.92 | []J | 1.5 | []J | 0.96 | [] |
| Barium | 40 | 21.2 | [] | 342 | | 22.0 | [] | 21.5 | [] |
| Beryllium | 1 | 0.30 | [] | 0.22 | U | 0.36 | [] | 0.25 | [] |
| Cadmium | 1 | 0.64 | U | 1.6 | | 0.62 | U | 0.64 | U |
| Calcium | 1000 | 873 | []J | 1500 | | 905 | []J | 1130 | J |
| Chromium | 2 | 11.5 | | 91.8 | J | 11.7 | | 9.6 | |
| Cobalt | 10 | 5.6 | [] | 12.5 | | 5.3 | [] | 4.9 | [] |
| Copper | 5 | 7.4 | U | 77.0 | J | 7.1 | U | 6.1 | U |
| Iron | 20 | 10100 | | 23200 | | 10200 | | 8170 | |
| Lead | 0.6 | 2.5 | J | 202 | J | 5.3 | J | 5.6 | J |
| Magnesium | 1000 | 2990 | | 7120 | | 2930 | | 2460 | |
| Manganese | 3 | 142 | | 433 | J | 115 | | 107 | |
| Mercury | 0.1 | 0.11 | U | 0.11 | UJ | 0.10 | U | 0.11 | U |
| Nickel | 8 | 8.6 | | 10.2 | | 8.7 | | 7.0 | [] |
| Potassium | 1000 | 1910 | | 6360 | | 1330 | | 1440 | |
| Selenium | 1 | 3.2 | UR | 3.1 | UJ | 0.62 | UR | 0.64 | UR |
| Silver | 2 | 1.5 | U | 1.4 | U | 1.5 | U | 1.5 | U |
| Sodium | 1000 | 141 | [] | 180 | [] | 125 | [] | 144 | [] |
| Thallium | 2 | 0.42 | U | 1.7 | UR | 0.41 | U | 0.43 | U |
| Vanadium | 10 | 17.8 | | 85.5 | | 18.1 | | 14.8 | |
| Zinc | 4 | 24.6 | | 233 | J | 23.1 | | 20.9 | |
| Cyanide | 1 | 0.53 | U | 2.8 | | 0.52 | U | 0.53 | U |
| Percent Solids: | | 94 | | 95 | | 96 | | 94 | |
| Associated Method Blank: | | BR18551S | | BR18551S2 | | BR18551S | | BR18551S | |
| Associated Equipment Blank: | | - | | - | | - | | - | |
| Associated Field Blank: | | - | | - | | - | | - | |

Table 2
Validation / Summary Table
(Method Blank Evaluation)

| SAMPLE LOCATION: | | 12PS12010601XX | 12PS12010101XX | 12PS12010401XX | 12PS12020101XX | 12PS12020201XD | 12PS12020201XX | 12PS12020301XX | 12PS12030101XX |
|---|---|---|---|---|---|---|---|---|---|
| DATE SAMPLED: | | 09/20/90 | 09/20/90 | 09/20/90 | 09/20/90 | 09/20/90 | 09/20/90 | 09/20/90 | 09/20/90 |
| ANALYTE | DL | | | | | | | | |
| Cadmium | 0.50 | 0.50 U | 0.46 U | 0.46 U | 0.39 U | 0.42 U | 0.42 U | 0.49 U | 0.38 U |
| Chromium | 1.0 | 62 | 11 | 41 | 19 | 21 | 11 | 42 | 13 |
| Mercury | 0.045 | 0.056 U | 0.27 | 0.056 U | 0.050 U | 0.050 U | 0.047 U | 0.053 U | 0.047 U |
| Nitrate-nitrite as N | 1.0 | 0.90 U | 2.0 | 0.94 U | 0.95 U | 0.94 U | 0.99 U | 0.99 U | 1.1 |
| Lead | 0.30 | 17 | 9.5 | 13 | 47 | 44 | 15 | 9.4 | 27 |
| Phosphorus | 30 | 530 | 210 | 490 | 190 | 170 | 250 | 120 | 240 |
| Percent Solids: | | 81 | 88 | 82 | 93 | 91 | 95 | 85 | 93 |
| Associated Method Blank: | | BN12MCS | BN12MCS | BN12MCS | BN12MCS | BN12MCS | BN12MCS | BN12MCS | BN12MCS |

M-99

Table 2
Validation / Summary Table
(Method Blank Evaluation)

| SAMPLE LOCATION: | | 12PS12030201XD | 12PS12030201XX | 12PS12030301XX |
|---|---|---|---|---|
| DATE SAMPLED: | | 09/20/90 | 09/20/90 | 09/20/90 |
| ANALYTE | DL | | | |
| Cadmium | 0.50 | 0.50 U | 0.47 U | 0.45 U |
| Chromium | 1.0 | 27 | 22 | 28 |
| Mercury | 0.045 | 0.056 U | 0.053 U | 0.053 U |
| Nitrate-nitrite as N | 1.0 | 0.99 U | 1.0 U | 0.97 U |
| Lead | 0.30 | 10 | 6.8 | 8.2 |
| Phosphorus | 30 | 240 J | 100 J | 350 |
| Percent Solids: | | 81 | 87 | 86 |
| Associated Method Blank: | | BN12MCS | BN12MCS | BN12MCS |

M-100

Table 2
Validation / Summary Table
(Method Blank Evaluation)

| SAMPLE LOCATION: | 12PS12010601XX | 12PS12010101XX | 12PS12010401XX | 12PS12020101XX | 12PS12020201XD | 12PS12020201XX | 12PS12020301XX | 12PS12030101XX |
|---|---|---|---|---|---|---|---|---|
| LAB NUMBER: | 01A | 02A | 03A | 04A | 05A | 08A | 09A | 10A |
| DATE SAMPLED: | 09/20/90 | 09/20/90 | 09/20/90 | 09/20/90 | 09/20/90 | 09/20/90 | 09/20/90 | 09/10/90 |
| DATE EXTRACTED: | 10/04/90 | 10/04/90 | 10/04/90 | 10/04/90 | 10/04/90 | 10/04/90 | 10/04/90 | 10/04/90 |
| DATE ANALYZED: | 10/31/90 | 10/31/90 | 10/31/90 | 10/31/90 | 10/31/90 | 10/31/90 | 10/31/90 | 10/31/90 |
| ANALYTE | | | | | | | | |
| 2,4-DNT | 9800 U | 10000 U | 10000 U | 10000 U | 10000 U | 9600 U | 9600 U | 9600 U |
| 2,6-DNT | 9800 U | 10000 U | 10000 U | 10000 U | 10000 U | 9600 U | 9600 U | 9600 U |
| HMX | 9800 U | 10000 U | 10000 U | 10000 U | 10000 U | 9600 U | 9600 U | 9600 U |
| RDX | 9800 U | 10000 U | 10000 U | 10000 U | 10000 U | 9600 U | 9600 U | 9600 U |
| TNT | 9800 U | 10000 U | 10000 U | 10000 U | 10000 U | 9600 U | 9600 U | 9600 U |
| TETRYL | 9800 U | 10000 U | 10000 U | 10000 U | 10000 U | 9600 U | 9600 U | 9600 U |
| Associated Method Blank: | BNRBTNT | BNRBTNT | BNRBTNT | BNRBTNT | BNRBTNT | BNRBTNT | BNRBTNT | BNRBTNT |

Table 2
Validation / Summary Table
(Method Blank Evaluation)

| SAMPLE LOCATION: | 12PS12030201XD | 12PS12030201XX | 12PS12030301XX |
|---|---|---|---|
| LAB NUMBER: | 11A | 12A | 13A |
| DATE SAMPLED: | 09/20/90 | 09/20/90 | 09/20/90 |
| DATE EXTRACTED: | 10/04/90 | 10/04/90 | 10/04/90 |
| DATE ANALYZED: | 10/31/90 | 11/01/90 | 11/01/90 |
| ANALYTE | | | |
| 2,4-DNT | 10000 U | 9800 U | 9300 U |
| 2,6-DNT | 10000 U | 9800 U | 9300 U |
| HMX | 10000 U | 9800 U | 9300 U |
| RDX | 10000 U | 9800 U | 9300 U |
| TNT | 10000 U | 9800 U | 9300 U |
| TETRYL | 10000 U | 9800 U | 9300 U |
| Associated Method Blank: | BNRBTNT | BNRBTNT | BNRBTNT |

# APPENDIX N

# SOLUTE TRANSPORT MODELING

## APPENDIX N - SOLUTE TRANSPORT MODELING

The purpose of the solute transport modeling was to assess whether or not it was likely that free product chlorinated solvent (principally TCE) could still be present in the aquifer at the FTA. A screening level model was used, varying a range of input parameters, to estimate probable ranges of concentrations of solvent in the immediate vicinity of the FTA. The point of reference was maximum concentrations (3 to 4 mg/L) determined in well MW-306, some 750 feet downgradient of the FTA. Matching concentrations at this point would require adjusting source strengths for a given aquifer and source configuration. This would provide, through the model, estimates of maximum concentrations at the FTA. If these concentrations exceeded 10 percent of solvent solubility, 110 mg/L for TCE with a water solubility of 1100 mg/L, then there would be a strong indication that free product had been, and still might be, present at the FTA.

The model used was WMPLUME, an analytical 2-dimensional transport model based on work by Wilson and Miller (1978), programmed by Milovan Beljin for the International Groundwater Modeling Center, which distributes the model as part of their SOLUTE modeling package. The model assumes a continuous point source, with the solute mixing uniformly throughout the thickness of the aquifer, and with a uniform one-dimensional flow field. The source area at the FTA is estimated to be about 70 feet square, and to simulate an areal source, five point sources were selected, arrayed as on the face of a die. Since the contamination is believed to exist primarily in the capillary zone, transfer of the solute will be somewhat continuous in nature, and, of course, with some pulses due to storm precipitation and infiltration events. While the flow field is somewhat radial due to the FTA's relationship to the general recharge area, it was felt that this factor could be accounted for by varying the lateral dispersion in the model to account for the observed lateral spreading of the plume. CPT and well samples indicated the plume to be distributed throughout the approximate 10-foot thickness of the aquifer.

Aquifer and transport parameters were selected based on observed or measured field values, and on probable ranges based on similar settings, literature, or experience. The program requires the Darcian velocity of the groundwater which was estimated based on determinations of the average hydraulic consuctivity for the area, 14.2 ft/d, and the hydraulic gradient, 0.015 ft/ft. The result of the calculation, $q = Ki$, where q is the Darcian velocity, K is the aquifer hydraulic conductivity, and i is the horizontal hydraulic gradient, is 0.21 ft/day. The porosity was taken as 0.3, which yi lds a seepage velocity ( $v = q/n$, where n is the effective porosity) of 0.71 ft/d or 259 ft/yr. Thus, since the reference well was some 750 feet downgradient of the FTA, an average travel time of about 3 years was determined. Five model runs were made, varying the longitudinal and lateral dispersivities, allowing for some degradation in some runs, and for a range of r tardation rates. Since the concern was the source strengths and initial

concentrations, parameter values were select d to conservatively overestimate the sourc strength. Longitudinal and lateral dispersivity ranges were taken as 10 to 30 feet and 3 to 10 feet, respectively. The range taken for the longitudinal dispersivity is reasonable for this aquifer, but since the model simulated long time (10 to 20 years), the model is not really sensitive to this selected value. The range for the lateral dispersivity is probably high for a sandy, permeable aquifer, but the aquifer does contain some silt, the flow is somewhat radial (resulting in a broader plume), and the selected values will produce a high-side estimate of source strength and initial concentration. Since degradation of chlorinated compounds once in a sandy aquifer is low, only about 1 or 2 percent degradation might be expected per year (little increase in degradation products is seen downgradient of the FTA); however, 5 percent per year was used as mdel input to again be conservative. Lastly, the retardation factor was varied from 1, no retardation, to 2, probaly a maximum for retardation of a chlorinated solvent in a sandy aquifer with little organic carbon content. In a long-term scenario, where equilibrium is established, this factor should have little effect, except if significant degradation occurs. With the aquifer and solute parameters selected, the source strengths were varied to produce a concentration in the 3 to 4 mg/L range at a distance of 750 feet. When this match was obtained, it provided an estimate of the loading rate and the concentrations in the immediate vicinity of the FTA. Each of these iterations was considered one run. The following table summarizes the final conditions in each of the runs:

TABLE N-1
MODEL PARAMETERS AND OUTPUT

| Run | RF | DL | DT | Rate | C750 | Source | Cmax | Time |
|---|---|---|---|---|---|---|---|---|
| 1 | 1 | 10 ft | 3 ft | 0 | 4.0 | 0.1 #/d | 8.6 | 10y |
| 2 | 1 | 30 | 10 | 0 | 4.0 | 0.17 | 10.3 | 10 |
| 3 | 1 | 30 | 10 | .051/y | 4.0 | 0.2 | 11.9 | 10 |
| 4 | 2 | 30 | 10 | .051 | 3.3 | 0.2 | 11.8 | 10 |
| 5 | 2 | 30 | 10 | .051 | 3.4 | 0.2 | 11.8 | 20 |

Notes: RF = retardation factor
DL = longitudinal dispersivity
DT = lateral dispersivity
Rate = degradation rate
C750 = computed concentration at the downgradient location, mg/L
Source = the combined loading of all five point sources representing the areal source
Cmax = maximum concentration computed near the sourc , mg/L
Time = simulation time, years

Run 5 was made to assure that near equilirium conditions had been achieved, offseting the slower plume travel caused by the increase in the retardation factor at Run 4.

The results show a maximum of slightly less than 12 mg/L, far less than the 110 mg/L which might indicate th pr sence of a free product at the FTA. Based on the analysis, which included the selection and variation of parameter values which would provide a conservatively high estimate of the initial loadings at the FTA and of the maximum concentrations anticipated, it seems highly unlikely that free product is present at the FTA.

References:

Beljin, Milovan. Solute: A Package of Analytical Models for Solute Transport in Groundwater. International Groundwater Modeling Software. January 1985, revised March 1990.

Wilson, J.L. and P.J. Miller. 1978. Two-Dimensional Plume in Uniform Groundwater Flow. Journal of the Hydraulics Division, HY4:503-514.

| PROJECT | COMP. BY | JOB NO. |
|---|---|---|
| NAS Brunswick<br>Site 11/EP | R Lewis | 4607-55 |
| | CHK. BY<br>MRD | DATE<br>2/4/91 |

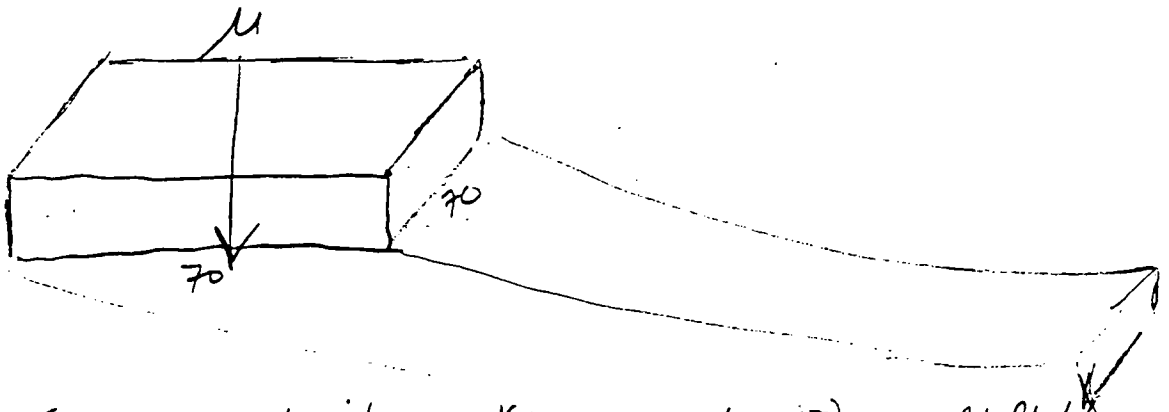


Seepage velocity = $\frac{K_i}{n} = \frac{14.2(0.015)}{0.3} = 0.71$ ft/day

= 259 ft/yr

Approximate source area = 70 x 70

Thickness of aquifer in source area = 10 ft

long disp - 10 ft
Trans disp - 3 ft

Assume some attenuation/degradation loss @ 1%/yr
2%/yr

$C/C_0 = 0.99 = e^{-kt}$ t = year

$K_1 = 1/t \ln 1/0.99 = 0.01005$

$K_2 = 1/t \ln 1/0.98 = 0.020203$

70(10)(259)(0.3) = 54,390 ft³/yr = 3,393,936 #/yr

M ~ 13.6 #/yr

m/s = 2.72 #/yr

| PROJECT | COMP. BY | JOB NO. |
|---|---|---|
| NAS Brunswick Site 11/EP | R Lewis | 4607-55 |
| | CHK. BY MPD | DATE 2/4/91 |

Sources

Source locations

(-35, 0) (-52, 35)
(-17, 35) (-52, -35)
(-17, -35)

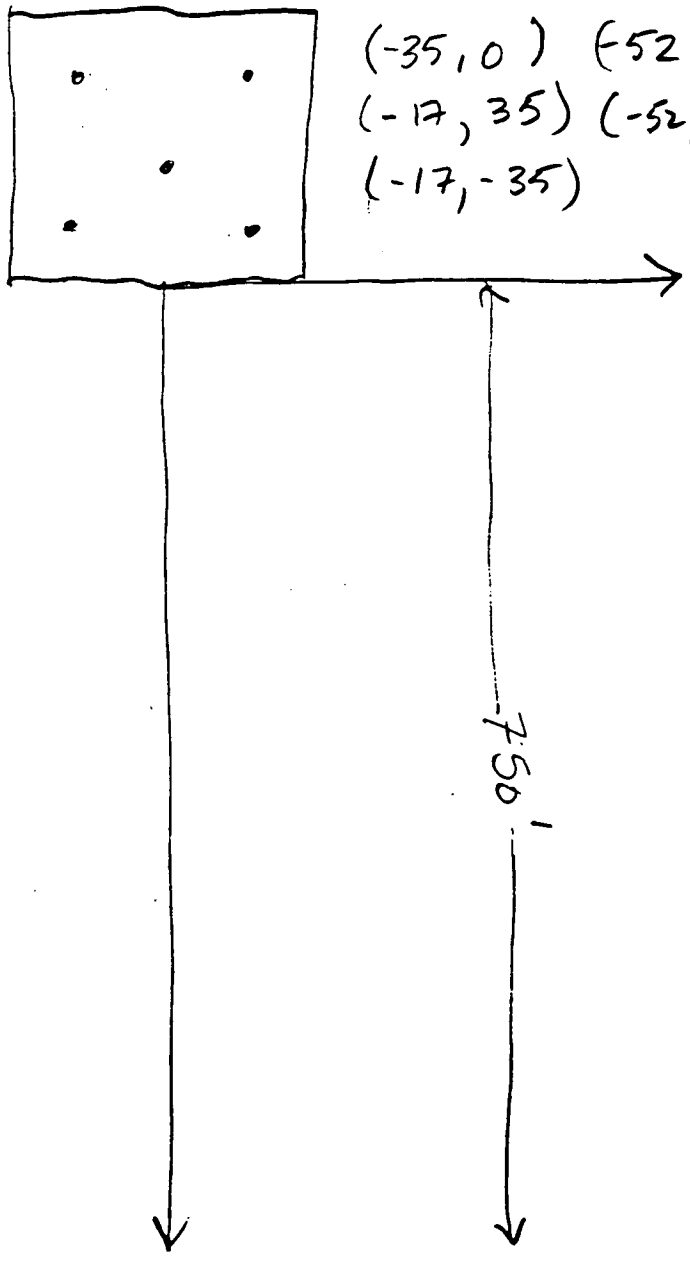

```
*********************************************
*                                           *
*   SOLUTE TRANSPORT FROM POINT SOURCES     *
*   IN TWO-DIMENSIONAL UNIFORM FLOW         *
*                                           *
*   MODEL: WMPLUME                          *
*                                           *
*********************************************
```

USER: R. LEWIS/BNAS RUN /

LOCATION: BNAS FTA

DATE: 2/4/91

INPUT DATA:

```
DARCY VELOCITY........................:    0.21 ft/d
EFFECTIVE POROSITY....................:     .3
AQUIFER THICKNESS.....................:   10.00 ft
LONGITUDINAL DISPERSIVITY.............:   10.00 ft
LATERAL DISPERSIVITY..................:    3.00 ft
RETARDATION FACTOR....................:    1.00
DECAY CONSTANT (lambda)...............:    0    1/d
NUMBER OF POINT SOURCES...............:    5
```

SOURCE DATA:

SOURCE NO. 1

```
X-COORDINATE OF THE SOURCE............:  -35.00 ft
Y-COORDINATE OF THE SOURCE............:    0.00 ft
THE SOURCE STRENGTH...................:    0.02 lb/d
ELAPSED TIME OF THE SOURCE ACTIVITY...: 3650.00 d
```

SOURCE NO. 2

```
X-COORDINATE OF THE SOURCE............:  -17.00 ft
Y-COORDINATE OF THE SOURCE............:   35.00 ft
THE SOURCE STRENGTH...................:    0.02 lb/d
ELAPSED TIME OF THE SOURCE ACTIVITY...: 3650.00 d
```

SOURCE NO. 3
---

X-COORDINATE OF THE SOURCE.....: -17.00 ft
Y-COORDINATE OF THE SOURCE.....: -35.00 ft
THE SOURCE STRENGTH.....: 0.02 lb/d
ELAPSED TIME OF THE SOURCE ACTIVITY...: 3650.00 d

SOURCE NO. 4
---

X-COORDINATE OF THE SOURCE.....: -52.00 ft
Y-COORDINATE OF THE SOURCE.....: 35.00 ft
THE SOURCE STRENGTH.....: 0.02 lb/d
ELAPSED TIME OF THE SOURCE ACTIVITY...: 3650.00 d

SOURCE NO. 5
---

X-COORDINATE OF THE SOURCE.....: -52.00 ft
Y-COORDINATE OF THE SOURCE.....: -35.00 ft
THE SOURCE STRENGTH.....: 0.02 lb/d
ELAPSED TIME OF THE SOURCE ACTIVITY...: 3650.00 d

GRID DATA:

X-COORDINATE OF THE GRID ORIGIN.....: 0.00 ft
Y-COORDINATE OF THE GRID ORIGIN.....: 0.00 ft
DISTANCE INCREMENT DELX.....: 50.00 ft
DISTANCE INCREMENT DELY.....: 20.00 ft
NUMBER OF NODES IN X-DIRECTION.....: 20
NUMBER OF NODES IN Y-DIRECTION.....: 10

********** RESULTS **********

+------> X-direction CONCENTRATION in mg/l (ppm)
|
v Y

| | 0.00 ft | 50.00 ft | 100.00 ft | 150.00 ft | 200.00 ft |
|---|---|---|---|---|---|
| 0.00 ft | 5.9222 | 5.9402 | 6.0741 | 5.9705 | 5.7736 |
| 20.00 ft | 6.1022 | 6.4439 | 6.0716 | 5.7594 | 5.4974 |
| 40.00 ft | 8.6293 | 6.0309 | 5.2392 | 4.8470 | 4.6033 |
| 60.00 ft | 2.0401 | 2.9706 | 3.1729 | 3.2081 | 3.2062 |
| 80.00 ft | 0.3651 | 0.8848 | 1.3188 | 1.6082 | 1.8007 |
| 100.00 ft | 0.0594 | 0.2026 | 0.4116 | 0.6270 | 0.8185 |
| 120.00 ft | 0.0094 | 0.0404 | 0.1057 | 0.1999 | 0.3087 |
| 140.00 ft | 0.0015 | 0.0074 | 0.0238 | 0.0547 | 0.0996 |
| 160.00 ft | 0.0002 | 0.0013 | 0.0049 | 0.0134 | 0.0284 |
| 180.00 ft | 0.0000 | 0.0002 | 0.0010 | 0.0030 | 0.0073 |

| | 250.00 ft | 300.00 ft | 350.00 ft | 400.00 ft | 450.00 ft |
|---|---|---|---|---|---|
| 0.00 ft | 5.5535 | 5.3370 | 5.1335 | 4.9457 | 4.7735 |
| 20.00 ft | 5.2680 | 5.0631 | 4.8782 | 4.7105 | 4.5576 |
| 40.00 ft | 4.4273 | 4.2862 | 4.1653 | 4.0576 | 3.9592 |
| 60.00 ft | 3.1945 | 3.1787 | 3.1599 | 3.1385 | 3.1147 |
| 80.00 ft | 1.9349 | 2.0330 | 2.1070 | 2.1638 | 2.2077 |
| 100.00 ft | 0.9802 | 1.1153 | 1.2285 | 1.3239 | 1.4050 |
| 120.00 ft | 0.4200 | 0.5272 | 0.6271 | 0.7188 | 0.8023 |
| 140.00 ft | 0.1552 | 0.2172 | 0.2822 | 0.3477 | 0.4120 |
| 160.00 ft | 0.0505 | 0.0792 | 0.1131 | 0.1508 | 0.1911 |
| 180.00 ft | 0.0148 | 0.0259 | 0.0408 | 0.0592 | 0.0806 |

| | 500.00 ft | 550.00 ft | 600.00 ft | 650.00 ft | 700.00 ft |
|---|---|---|---|---|---|
| 0.00 ft | 4.6158 | 4.4713 | 4.3384 | 4.2160 | 4.1029 |
| 20.00 ft | 4.4177 | 4.2892 | 4.1707 | 4.0611 | 3.9593 |
| 40.00 ft | 3.8681 | 3.7830 | 3.7032 | 3.6280 | 3.5570 |
| 60.00 ft | 3.0888 | 3.0613 | 3.0326 | 3.0029 | 2.9727 |
| 80.00 ft | 2.2414 | 2.2671 | 2.2862 | 2.2998 | 2.3090 |
| 100.00 ft | 1.4741 | 1.5334 | 1.5842 | 1.6279 | 1.6654 |
| 120.00 ft | 0.8780 | 0.9465 | 1.0084 | 1.0644 | 1.1150 |
| 140.00 ft | 0.4741 | 0.5335 | 0.5898 | 0.6430 | 0.6929 |
| 160.00 ft | 0.2329 | 0.2752 | 0.3175 | 0.3593 | 0.4001 |
| 180.00 ft | 0.1045 | 0.1304 | 0.1577 | 0.1860 | 0.2150 |

| | 750.00 ft | 800.00 ft | 850.00 ft | 900.00 ft | 950.00 ft |
|---|---|---|---|---|---|
| 0.00 ft | 3.9980 | 3.9005 | 3.8095 | 3.7244 | 3.6447 |
| 20.00 ft | 3.8646 | 3.7761 | 3.6933 | 3.6156 | 3.5424 |
| 40.00 ft | 3.4897 | 3.4258 | 3.3652 | 3.3075 | 3.2524 |
| 60.00 ft | 2.9422 | 2.9115 | 2.8809 | 2.8505 | 2.8204 |
| 80.00 ft | 2.3144 | 2.3167 | 2.3164 | 2.3139 | 2.3096 |

| | | | | | | |
|---|---|---|---|---|---|---|
| 100.00 | ft | 1.6976 | 1.7252 | 1.7487 | 1.7687 | 1.7856 |
| 120.00 | ft | 1.1607 | 1.2020 | 1.2392 | 1.2729 | 1.3033 |
| 140.00 | ft | 0.7398 | 0.7836 | 0.8245 | 0.8626 | 0.8981 |
| 160.00 | ft | 0.4398 | 0.4782 | 0.5152 | 0.5506 | 0.5845 |
| 180.00 | ft | 0.2442 | 0.2735 | 0.3025 | 0.3313 | 0.3595 |

```
*********************************************
*                                           *
*   SOLUTE TRANSPORT FROM POINT SOURCES     *
*   IN TWO-DIMENSIONAL UNIFORM FLOW         *
*                                           *
*   MODEL: WMPLUME                          *
*                                           *
*********************************************
```

USER: R. LEWIS - BNAS RUN2

LOCATION: BNAS FTA

DATE: 2/4/91

INPUT DATA:

```
DARCY VELOCITY........................:    0.21 ft/d
EFFECTIVE POROSITY....................:     .3
AQUIFER THICKNESS.....................:   10.00 ft
LONGITUDINAL DISPERSIVITY.............:   30.00 ft
LATERAL DISPERSIVITY..................:   10.00 ft
RETARDATION FACTOR....................:    1.00
DECAY CONSTANT (lambda)...............:    0    1/d
NUMBER OF POINT SOURCES...............:    5
```

SOURCE DATA:

SOURCE NO. 1

```
X-COORDINATE OF THE SOURCE............:  -35.00 ft
Y-COORDINATE OF THE SOURCE............:    0.00 ft
THE SOURCE STRENGTH...................:    0.03 lb/d
ELAPSED TIME OF THE SOURCE ACTIVITY...: 3650.00 d
```

.034

SOURCE NO. 2

```
X-COORDINATE OF THE SOURCE............:  -17.00 ft
Y-COORDINATE OF THE SOURCE............:   35.00 ft
THE SOURCE STRENGTH...................:    0.03 lb/d
ELAPSED TIME OF THE SOURCE ACTIVITY...: 3650.00 d
```

SOURCE NO. 3
---

X-COORDINATE OF THE SOURCE.....: -17.00 ft
Y-COORDINATE OF THE SOURCE.....: -35.00 ft
THE SOURCE STRENGTH.....: 0.03 lb/d
ELAPSED TIME OF THE SOURCE ACTIVITY...: 3650.00 d

SOURCE NO. 4
---

X-COORDINATE OF THE SOURCE.....: -52.00 ft
Y-COORDINATE OF THE SOURCE.....: 35.00 ft
THE SOURCE STRENGTH.....: 0.03 lb/d
ELAPSED TIME OF THE SOURCE ACTIVITY...: 3650.00 d

SOURCE NO. 5
---

X-COORDINATE OF THE SOURCE.....: -52.00 ft
Y-COORDINATE OF THE SOURCE.....: -35.00 ft
THE SOURCE STRENGTH.....: 0.03 lb/d
ELAPSED TIME OF THE SOURCE ACTIVITY...: 3650.00 d

GRID DATA:

X-COORDINATE OF THE GRID ORIGIN.....: 0.00 ft
Y-COORDINATE OF THE GRID ORIGIN.....: 0.00 ft
DISTANCE INCREMENT DELX.....: 50.00 ft
DISTANCE INCREMENT DELY.....: 20.00 ft
NUMBER OF NODES IN X-DIRECTION.....: 20
NUMBER OF NODES IN Y-DIRECTION.....: 10

********** RESULTS **********

+------> X-direction  CONCENTRATION in mg/l (ppm)
|
v Y

| | 0.00 ft | 50.00 ft | 100.00 ft | 150.00 ft | 200.00 ft |
|---|---|---|---|---|---|
| 0.00 ft | 9.8752 | 9.0257 | 8.1213 | 7.3540 | 6.7426 |
| 20.00 ft | 10.1130 | 8.7962 | 7.7982 | 7.0761 | 6.5171 |
| 40.00 ft | 10.3094 | 7.6659 | 6.8160 | 6.2867 | 5.8821 |
| 60.00 ft | 5.2643 | 5.5054 | 5.3281 | 5.1383 | 4.9568 |
| 80.00 ft | 2.6248 | 3.4209 | 3.7489 | 3.8741 | 3.9089 |
| 100.00 ft | 1.3271 | 1.9795 | 2.4350 | 2.7225 | 2.9007 |
| 120.00 ft | 0.6810 | 1.1085 | 1.4983 | 1.8082 | 2.0417 |
| 140.00 ft | 0.3538 | 0.6114 | 0.8900 | 1.1504 | 1.3751 |
| 160.00 ft | 0.1856 | 0.3348 | 0.5167 | 0.7088 | 0.8936 |
| 180.00 ft | 0.0981 | 0.1828 | 0.2955 | 0.4264 | 0.5644 |

| | 250.00 ft | 300.00 ft | 350.00 ft | 400.00 ft | 450.00 ft |
|---|---|---|---|---|---|
| 0.00 ft | 6.2519 | 5.8501 | 5.5147 | 5.2299 | 4.9843 |
| 20.00 ft | 6.0680 | 5.6980 | 5.3867 | 5.1204 | 4.8894 |
| 40.00 ft | 5.5491 | 5.2661 | 5.0212 | 4.8065 | 4.6163 |
| 60.00 ft | 4.7844 | 4.6219 | 4.4699 | 4.3284 | 4.1970 |
| 80.00 ft | 3.8969 | 3.8585 | 3.8051 | 3.7434 | 3.6775 |
| 100.00 ft | 3.0092 | 3.0718 | 3.1034 | 3.1137 | 3.1092 |
| 120.00 ft | 2.2142 | 2.3403 | 2.4313 | 2.4959 | 2.5403 |
| 140.00 ft | 1.5616 | 1.7133 | 1.8352 | 1.9323 | 2.0093 |
| 160.00 ft | 1.0621 | 1.2106 | 1.3390 | 1.4487 | 1.5416 |
| 180.00 ft | 0.7005 | 0.8293 | 0.9477 | 1.0546 | 1.1499 |

| | 500.00 ft | 550.00 ft | 600.00 ft | 650.00 ft | 700.00 ft |
|---|---|---|---|---|---|
| 0.00 ft | 4.7698 | 4.5806 | 4.4120 | 4.2606 | 4.1237 |
| 20.00 ft | 4.6867 | 4.5070 | 4.3463 | 4.2015 | 4.0701 |
| 40.00 ft | 4.4465 | 4.2937 | 4.1553 | 4.0292 | 3.9137 |
| 60.00 ft | 4.0751 | 3.9619 | 3.8566 | 3.7586 | 3.6671 |
| 80.00 ft | 3.6101 | 3.5427 | 3.4764 | 3.4118 | 3.3492 |
| 100.00 ft | 3.0944 | 3.0724 | 3.0455 | 3.0153 | 2.9829 |
| 120.00 ft | 2.5694 | 2.5867 | 2.5950 | 2.5962 | 2.5922 |
| 140.00 ft | 2.0697 | 2.1166 | 2.1526 | 2.1796 | 2.1993 |
| 160.00 ft | 1.6199 | 1.6855 | 1.7403 | 1.7858 | 1.8233 |
| 180.00 ft | 1.2341 | 1.3081 | 1.3729 | 1.4293 | 1.4783 |

| | 750.00 ft | 800.00 ft | 850.00 ft | 900.00 ft | 950.00 ft |
|---|---|---|---|---|---|
| 0.00 ft | 3.9991 | 3.8852 | 3.7803 | 3.6835 | 3.5937 |
| 20.00 ft | 3.9503 | 3.8404 | 3.7391 | 3.6454 | 3.5584 |
| 40.00 ft | 3.8075 | 3.7093 | 3.6183 | 3.5336 | 3.4545 |
| 60.00 ft | 3.5815 | 3.5014 | 3.4261 | 3.3552 | 3.2884 |
| 80.00 ft | 3.2888 | 3.2307 | 3.1748 | 3.1212 | 3.0698 |

| | | | | | | |
|---|---|---|---|---|---|---|
| 100.00 | ft | 2.9492 | 2.9147 | 2.8800 | 2.8453 | 2.8109 |
| 120.00 | ft | 2.5839 | 2.5724 | 2.5585 | 2.5426 | 2.5254 |
| 140.00 | ft | 2.2131 | 2.2219 | 2.2267 | 2.2281 | 2.2268 |
| 160.00 | ft | 1.8542 | 1.8792 | 1.8994 | 1.9154 | 1.9277 |
| 180.00 | ft | 1.5207 | 1.5574 | 1.5889 | 1.6160 | 1.6392 |

```
*********************************************
*                                           *
*   SOLUTE TRANSPORT FROM POINT SOURCES     *
*   IN TWO-DIMENSIONAL UNIFORM FLOW         *
*                                           *
*   MODEL: WMPLUME                          *
*                                           *
*********************************************
```

USER: R. LEWIS - RUN 3

LOCATION: BNAS FTA

DATE: 2/4/91

INPUT DATA:

| | | |
|---|---|---|
| DARCY VELOCITY.....: | 0.21 | ft/d |
| EFFECTIVE POROSITY.....: | .3 | |
| AQUIFER THICKNESS.....: | 10.00 | ft |
| LONGITUDINAL DISPERSIVITY.....: | 30.00 | ft |
| LATERAL DISPERSIVITY.....: | 10.00 | ft |
| RETARDATION FACTOR.....: | 1.00 | |
| DECAY CONSTANT (lambda).....: | .0001405 | 1/d |
| NUMBER OF POINT SOURCES.....: | 5 | |

SOURCE DATA:

SOURCE NO. 1

| | | |
|---|---|---|
| X-COORDINATE OF THE SOURCE.....: | -35.00 | ft |
| Y-COORDINATE OF THE SOURCE.....: | 0.00 | ft |
| THE SOURCE STRENGTH.....: | 0.04 | lb/d |
| ELAPSED TIME OF THE SOURCE ACTIVITY...: | 3650.00 | d |

SOURCE NO. 2

| | | |
|---|---|---|
| X-COORDINATE OF THE SOURCE.....: | -17.00 | ft |
| Y-COORDINATE OF THE SOURCE.....: | 35.00 | ft |
| THE SOURCE STRENGTH.....: | 0.04 | lb/d |
| ELAPSED TIME OF THE SOURCE ACTIVITY...: | 3650.00 | d |

SOURCE NO. 3
---

```
X-COORDINATE OF THE SOURCE............:  -17.00 ft
Y-COORDINATE OF THE SOURCE............:  -35.00 ft
THE SOURCE STRENGTH...................:    0.04 lb/d
ELAPSED TIME OF THE SOURCE ACTIVITY...: 3650.00 d
```

SOURCE NO. 4
---

```
X-COORDINATE OF THE SOURCE............:  -52.00 ft
Y-COORDINATE OF THE SOURCE............:   35.00 ft
THE SOURCE STRENGTH...................:    0.04 lb/d
ELAPSED TIME OF THE SOURCE ACTIVITY...: 3650.00 d
```

SOURCE NO. 5
---

```
X-COORDINATE OF THE SOURCE............:  -52.00 ft
Y-COORDINATE OF THE SOURCE............:  -35.00 ft
THE SOURCE STRENGTH...................:    0.04 lb/d
ELAPSED TIME OF THE SOURCE ACTIVITY...: 3650.00 d
```

GRID DATA:

```
X-COORDINATE OF THE GRID ORIGIN.......:    0.00 ft
Y-COORDINATE OF THE GRID ORIGIN.......:    0.00 ft
DISTANCE INCREMENT DELX...............:   50.00 ft
DISTANCE INCREMENT DELY...............:   20.00 ft
NUMBER OF NODES IN X-DIRECTION........:   20
NUMBER OF NODES IN Y-DIRECTION........:   10
```

********** RESULTS **********

+------> X-direction CONCENTRATION in mg/l (ppm)
|
v Y

| | 0.00 ft | 50.00 ft | 100.00 ft | 150.00 ft | 200.00 ft |
|---|---|---|---|---|---|
| 0.00 ft | 11.4174 | 10.3492 | 9.2284 | 8.2776 | 7.5164 |
| 20.00 ft | 11.7011 | 10.0886 | 8.8601 | 7.9629 | 7.2630 |
| 40.00 ft | 11.9487 | 8.7897 | 7.7384 | 7.0687 | 6.5499 |
| 60.00 ft | 6.0689 | 6.2970 | 6.0379 | 5.7681 | 5.5115 |
| 80.00 ft | 3.0071 | 3.8959 | 4.2351 | 4.3379 | 4.3369 |
| 100.00 ft | 1.5104 | 2.2424 | 2.7394 | 3.0381 | 3.2090 |
| 120.00 ft | 0.7698 | 1.2484 | 1.6774 | 2.0096 | 2.2508 |
| 140.00 ft | 0.3972 | 0.6843 | 0.9910 | 1.2725 | 1.5098 |
| 160.00 ft | 0.2070 | 0.3724 | 0.5721 | 0.7800 | 0.9767 |
| 180.00 ft | 0.1087 | 0.2020 | 0.3252 | 0.4668 | 0.6138 |

| | 250.00 ft | 300.00 ft | 350.00 ft | 400.00 ft | 450.00 ft |
|---|---|---|---|---|---|
| 0.00 ft | 6.9014 | 6.3947 | 5.9689 | 5.6048 | 5.2889 |
| 20.00 ft | 6.6968 | 6.2269 | 5.8290 | 5.4864 | 5.1873 |
| 40.00 ft | 6.1193 | 5.7508 | 5.4298 | 5.1468 | 4.8948 |
| 60.00 ft | 5.2690 | 5.0411 | 4.8283 | 4.6301 | 4.4458 |
| 80.00 ft | 4.2833 | 4.2011 | 4.1036 | 3.9984 | 3.8903 |
| 100.00 ft | 3.2993 | 3.3371 | 3.3401 | 3.3196 | 3.2834 |
| 120.00 ft | 2.4202 | 2.5353 | 2.6102 | 2.6548 | 2.6770 |
| 140.00 ft | 1.7007 | 1.8501 | 1.9644 | 2.0499 | 2.1121 |
| 160.00 ft | 1.1520 | 1.3025 | 1.4285 | 1.5321 | 1.6160 |
| 180.00 ft | 0.7564 | 0.8886 | 1.0073 | 1.1115 | 1.2015 |

| | 500.00 ft | 550.00 ft | 600.00 ft | 650.00 ft | 700.00 ft |
|---|---|---|---|---|---|
| 0.00 ft | 5.0114 | 4.7650 | 4.5443 | 4.3449 | 4.1637 |
| 20.00 ft | 4.9232 | 4.6877 | 4.4759 | 4.2840 | 4.1090 |
| 40.00 ft | 4.6684 | 4.4636 | 4.2771 | 4.1065 | 3.9494 |
| 60.00 ft | 4.2746 | 4.1152 | 3.9666 | 3.8278 | 3.6979 |
| 80.00 ft | 3.7820 | 3.6755 | 3.5716 | 3.4711 | 3.3741 |
| 100.00 ft | 3.2366 | 3.1827 | 3.1245 | 3.0636 | 3.0013 |
| 120.00 ft | 2.6822 | 2.6747 | 2.6577 | 2.6336 | 2.6042 |
| 140.00 ft | 2.1556 | 2.1839 | 2.2002 | 2.2068 | 2.2056 |
| 160.00 ft | 1.6827 | 1.7349 | 1.7747 | 1.8041 | 1.8248 |
| 180.00 ft | 1.2782 | 1.3427 | 1.3964 | 1.4404 | 1.4760 |

| | 750.00 ft | 800.00 ft | 850.00 ft | 900.00 ft | 950.00 ft |
|---|---|---|---|---|---|
| 0.00 ft | 3.9979 | 3.8455 | 3.7046 | 3.5740 | 3.4523 |
| 20.00 ft | 3.9485 | 3.8007 | 3.6638 | 3.5366 | 3.4180 |
| 40.00 ft | 3.8043 | 3.6696 | 3.5442 | 3.4270 | 3.3171 |
| 60.00 ft | 3.5761 | 3.4617 | 3.3539 | 3.2521 | 3.1559 |
| 80.00 ft | 3.2808 | 3.1912 | 3.1053 | 3.0229 | 2.9439 |

| | | | | | | |
|---|---|---|---|---|---|---|
| 100.00 | ft | 2.9385 | 2.8760 | 2.8140 | 2.7529 | 2.6930 |
| 120.00 | ft | 2.5709 | 2.5347 | 2.4965 | 2.4570 | 2.4166 |
| 140.00 | ft | 2.1982 | 2.1858 | 2.1694 | 2.1499 | 2.1278 |
| 160.00 | ft | 1.8381 | 1.8453 | 1.8473 | 1.8451 | 1.8392 |
| 180.00 | ft | 1.5043 | 1.5261 | 1.5423 | 1.5538 | 1.5610 |

```
*********************************************
*                                           *
*   SOLUTE TRANSPORT FROM POINT SOURCES     *
*   IN TWO-DIMENSIONAL UNIFORM FLOW         *
*                                           *
*   MODEL: WMPLUME                          *
*                                           *
*********************************************
```

USER: R. LEWIS - RUN4

LOCATION: BNAS FTA

DATE: 2/4/91

INPUT DATA:

```
DARCY VELOCITY........................:    0.21 ft/d
EFFECTIVE POROSITY....................:     .3
AQUIFER THICKNESS.....................:   10.00 ft
LONGITUDINAL DISPERSIVITY.............:   30.00 ft
LATERAL DISPERSIVITY..................:   10.00 ft
RETARDATION FACTOR....................:    2.00
DECAY CONSTANT (lambda)...............:    .0001405    1/d
NUMBER OF POINT SOURCES...............:    5
```

SOURCE DATA:

SOURCE NO. 1

```
X-COORDINATE OF THE SOURCE............:  -35.00 ft
Y-COORDINATE OF THE SOURCE............:    0.00 ft
THE SOURCE STRENGTH...................:    0.04 lb/d
ELAPSED TIME OF THE SOURCE ACTIVITY...: 3650.00 d
```

SOURCE NO. 2

```
X-COORDINATE OF THE SOURCE............:  -17.00 ft
Y-COORDINATE OF THE SOURCE............:   35.00 ft
THE SOURCE STRENGTH...................:    0.04 lb/d
ELAPSED TIME OF THE SOURCE ACTIVITY...: 3650.00 d
```

SOURCE NO. 3
---

```
X-COORDINATE OF THE SOURCE............:  -17.00 ft
Y-COORDINATE OF THE SOURCE............:  -35.00 ft
THE SOURCE STRENGTH...................:    0.04 lb/d
ELAPSED TIME OF THE SOURCE ACTIVITY...: 3650.00 d
```

SOURCE NO. 4
---

```
X-COORDINATE OF THE SOURCE............:  -52.00 ft
Y-COORDINATE OF THE SOURCE............:   35.00 ft
THE SOURCE STRENGTH...................:    0.04 lb/d
ELAPSED TIME OF THE SOURCE ACTIVITY...: 3650.00 d
```

SOURCE NO. 5
---

```
X-COORDINATE OF THE SOURCE............:  -52.00 ft
Y-COORDINATE OF THE SOURCE............:  -35.00 ft
THE SOURCE STRENGTH...................:    0.04 lb/d
ELAPSED TIME OF THE SOURCE ACTIVITY...: 3650.00 d
```

GRID DATA:

```
X-COORDINATE OF THE GRID ORIGIN.......:    0.00 ft
Y-COORDINATE OF THE GRID ORIGIN.......:    0.00 ft
DISTANCE INCREMENT DELX...............:   50.00 ft
DISTANCE INCREMENT DELY...............:   20.00 ft
NUMBER OF NODES IN X-DIRECTION........:   20
NUMBER OF NODES IN Y-DIRECTION........:   10
```

********** RESULTS **********

+------> X-direction  CONCENTRATION in mg/l (ppm)
|
v Y

| | 0.00 ft | 50.00 ft | 100.00 ft | 150.00 ft | 200.00 ft |
|---|---|---|---|---|---|
| 0.00 ft | 11.2235 | 10.0905 | 8.9176 | 7.9242 | 7.1267 |
| 20.00 ft | 11.5110 | 9.8390 | 8.5606 | 7.6211 | 6.8847 |
| 40.00 ft | 11.7746 | 8.5699 | 7.4716 | 6.7597 | 6.2037 |
| 60.00 ft | 5.9491 | 6.1247 | 5.8190 | 5.5071 | 5.2126 |
| 80.00 ft | 2.9296 | 3.7732 | 4.0690 | 4.1313 | 4.0928 |
| 100.00 ft | 1.4619 | 2.1604 | 2.6212 | 2.8837 | 3.0198 |
| 120.00 ft | 0.7402 | 1.1958 | 1.5972 | 1.8997 | 2.1106 |
| 140.00 ft | 0.3794 | 0.6514 | 0.9386 | 1.1973 | 1.4100 |
| 160.00 ft | 0.1963 | 0.3523 | 0.5387 | 0.7302 | 0.9080 |
| 180.00 ft | 0.1024 | 0.1898 | 0.3044 | 0.4346 | 0.5678 |

| | 250.00 ft | 300.00 ft | 350.00 ft | 400.00 ft | 450.00 ft |
|---|---|---|---|---|---|
| 0.00 ft | 6.4803 | 5.9457 | 5.4947 | 5.1073 | 4.7692 |
| 20.00 ft | 6.2866 | 5.7883 | 5.3647 | 4.9983 | 4.6765 |
| 40.00 ft | 5.7400 | 5.3418 | 4.9939 | 4.6859 | 4.4100 |
| 60.00 ft | 4.9358 | 4.6768 | 4.4355 | 4.2108 | 4.0014 |
| 80.00 ft | 4.0047 | 3.8907 | 3.7637 | 3.6308 | 3.4962 |
| 100.00 ft | 3.0769 | 3.0834 | 3.0569 | 3.0084 | 2.9451 |
| 120.00 ft | 2.2500 | 2.3361 | 2.3827 | 2.4001 | 2.3955 |
| 140.00 ft | 1.5754 | 1.6991 | 1.7877 | 1.8478 | 1.8847 |
| 160.00 ft | 1.0627 | 1.1916 | 1.2955 | 1.3765 | 1.4373 |
| 180.00 ft | 0.6947 | 0.8096 | 0.9099 | 0.9948 | 1.0647 |

| | 500.00 ft | 550.00 ft | 600.00 ft | 650.00 ft | 700.00 ft |
|---|---|---|---|---|---|
| 0.00 ft | 4.4696 | 4.2001 | 3.9541 | 3.7256 | 3.5098 |
| 20.00 ft | 4.3900 | 4.1311 | 3.8937 | 3.6725 | 3.4627 |
| 40.00 ft | 4.1601 | 3.9311 | 3.7184 | 3.5178 | 3.3256 |
| 60.00 ft | 3.8053 | 3.6204 | 3.4445 | 3.2752 | 3.1097 |
| 80.00 ft | 3.3619 | 3.2288 | 3.0967 | 2.9649 | 2.8319 |
| 100.00 ft | 2.8716 | 2.7905 | 2.7035 | 2.6110 | 2.5128 |
| 120.00 ft | 2.3741 | 2.3395 | 2.2938 | 2.2383 | 2.1735 |
| 140.00 ft | 1.9027 | 1.9047 | 1.8931 | 1.8693 | 1.8339 |
| 160.00 ft | 1.4804 | 1.5080 | 1.5215 | 1.5221 | 1.5105 |
| 180.00 ft | 1.1203 | 1.1625 | 1.1921 | 1.2096 | 1.2154 |

| | 750.00 ft | 800.00 ft | 850.00 ft | 900.00 ft | 950.00 ft |
|---|---|---|---|---|---|
| 0.00 ft | 3.3019 | 3.0980 | 2.8946 | 2.6889 | 2.4791 |
| 20.00 ft | 3.2602 | 3.0609 | 2.8615 | 2.6595 | 2.4530 |
| 40.00 ft | 3.1382 | 2.9522 | 2.7646 | 2.5732 | 2.3765 |
| 60.00 ft | 2.9455 | 2.7799 | 2.6107 | 2.4359 | 2.2545 |
| 80.00 ft | 2.6963 | 2.5562 | 2.4100 | 2.2564 | 2.0945 |

| | | | | | | |
|---|---|---|---|---|---|---|
| 100.00 | ft | 2.4081 | 2.2961 | 2.1755 | 2.0455 | 1.9058 |
| 120.00 | ft | 2.0993 | 2.0152 | 1.9207 | 1.8153 | 1.6989 |
| 140.00 | ft | 1.7873 | 1.7291 | 1.6593 | 1.5775 | 1.4840 |
| 160.00 | ft | 1.4868 | 1.4511 | 1.4031 | 1.3429 | 1.2706 |
| 180.00 | ft | 1.2094 | 1.1917 | 1.1619 | 1.1202 | 1.0666 |

```
*********************************************
*                                           *
*   SOLUTE TRANSPORT FROM POINT SOURCES     *
*   IN TWO-DIMENSIONAL UNIFORM FLOW         *
*                                           *
*   MODEL: WMPLUME                          *
*                                           *
*********************************************
```

USER: R. LEWIS RUN 5

LOCATION: BNAS FTA

DATE: 2/4/91

INPUT DATA:

```
DARCY VELOCITY........................:    0.21 ft/d
EFFECTIVE POROSITY....................:     .3
AQUIFER THICKNESS.....................:   10.00 ft
LONGITUDINAL DISPERSIVITY.............:   30.00 ft
LATERAL DISPERSIVITY..................:   10.00 ft
RETARDATION FACTOR....................:    2.00
DECAY CONSTANT (lambda)...............:    .0001405    1/d
NUMBER OF POINT SOURCES...............:    5
```

SOURCE DATA:

SOURCE NO. 1

```
X-COORDINATE OF THE SOURCE............:  -35.00 ft
Y-COORDINATE OF THE SOURCE............:    0.00 ft
THE SOURCE STRENGTH...................:    0.04 lb/d
ELAPSED TIME OF THE SOURCE ACTIVITY...: 7300.00 d
```

SOURCE NO. 2

```
X-COORDINATE OF THE SOURCE............:  -17.00 ft
Y-COORDINATE OF THE SOURCE............:   35.00 ft
THE SOURCE STRENGTH...................:    0.04 lb/d
ELAPSED TIME OF THE SOURCE ACTIVITY...: 7300.00 d
```

SOURCE NO. 3
---

X-COORDINATE OF THE SOURCE.....: -17.00 ft
Y-COORDINATE OF THE SOURCE.....: -35.00 ft
THE SOURCE STRENGTH.....: 0.04 lb/d
ELAPSED TIME OF THE SOURCE ACTIVITY...: 7300.00 d

SOURCE NO. 4
---

X-COORDINATE OF THE SOURCE.....: -52.00 ft
Y-COORDINATE OF THE SOURCE.....: 35.00 ft
THE SOURCE STRENGTH.....: 0.04 lb/d
ELAPSED TIME OF THE SOURCE ACTIVITY...: 7300.00 d

SOURCE NO. 5
---

X-COORDINATE OF THE SOURCE.....: -52.00 ft
Y-COORDINATE OF THE SOURCE.....: -35.00 ft
THE SOURCE STRENGTH.....: 0.04 lb/d
ELAPSED TIME OF THE SOURCE ACTIVITY...: 7300.00 d

GRID DATA:

X-COORDINATE OF THE GRID ORIGIN.....: 0.00 ft
Y-COORDINATE OF THE GRID ORIGIN.....: 0.00 ft
DISTANCE INCREMENT DELX.....: 50.00 ft
DISTANCE INCREMENT DELY.....: 20.00 ft
NUMBER OF NODES IN X-DIRECTION.....: 20
NUMBER OF NODES IN Y-DIRECTION.....: 10

********** RESULTS **********

+------> X-direction  CONCENTRATION in mg/l (ppm)
|
v Y

| | 0.00 ft | 50.00 ft | 100.00 ft | 150.00 ft | 200.00 ft |
|---|---|---|---|---|---|
| 0.00 ft | 11.2236 | 10.0905 | 8.9177 | 7.9244 | 7.1271 |
| 20.00 ft | 11.5110 | 9.8391 | 8.5607 | 7.6213 | 6.8851 |
| 40.00 ft | 11.7746 | 8.5700 | 7.4717 | 6.7599 | 6.2041 |
| 60.00 ft | 5.9492 | 6.1247 | 5.8191 | 5.5073 | 5.2130 |
| 80.00 ft | 2.9296 | 3.7732 | 4.0691 | 4.1315 | 4.0932 |
| 100.00 ft | 1.4620 | 2.1604 | 2.6212 | 2.8839 | 3.0201 |
| 120.00 ft | 0.7402 | 1.1958 | 1.5972 | 1.8998 | 2.1109 |
| 140.00 ft | 0.3794 | 0.6515 | 0.9386 | 1.1975 | 1.4103 |
| 160.00 ft | 0.1963 | 0.3523 | 0.5388 | 0.7303 | 0.9082 |
| 180.00 ft | 0.1024 | 0.1899 | 0.3045 | 0.4347 | 0.5680 |

| | 250.00 ft | 300.00 ft | 350.00 ft | 400.00 ft | 450.00 ft |
|---|---|---|---|---|---|
| 0.00 ft | 6.4811 | 5.9471 | 5.4972 | 5.1117 | 4.7765 |
| 20.00 ft | 6.2873 | 5.7897 | 5.3672 | 5.0026 | 4.6839 |
| 40.00 ft | 5.7407 | 5.3432 | 4.9963 | 4.6901 | 4.4172 |
| 60.00 ft | 4.9365 | 4.6781 | 4.4378 | 4.2149 | 4.0083 |
| 80.00 ft | 4.0054 | 3.8920 | 3.7659 | 3.6346 | 3.5027 |
| 100.00 ft | 3.0775 | 3.0846 | 3.0590 | 3.0120 | 2.9512 |
| 120.00 ft | 2.2506 | 2.3372 | 2.3846 | 2.4034 | 2.4011 |
| 140.00 ft | 1.5760 | 1.7000 | 1.7894 | 1.8508 | 1.8899 |
| 160.00 ft | 1.0632 | 1.1925 | 1.2970 | 1.3792 | 1.4419 |
| 180.00 ft | 0.6951 | 0.8103 | 0.9112 | 0.9972 | 1.0687 |

| | 500.00 ft | 550.00 ft | 600.00 ft | 650.00 ft | 700.00 ft |
|---|---|---|---|---|---|
| 0.00 ft | 4.4817 | 4.2197 | 3.9849 | 3.7728 | 3.5801 |
| 20.00 ft | 4.4021 | 4.1506 | 3.9243 | 3.7194 | 3.5326 |
| 40.00 ft | 4.1720 | 3.9502 | 3.7483 | 3.5637 | 3.3940 |
| 60.00 ft | 3.8167 | 3.6388 | 3.4735 | 3.3194 | 3.1757 |
| 80.00 ft | 3.3727 | 3.2463 | 3.1242 | 3.0070 | 2.8948 |
| 100.00 ft | 2.8817 | 2.8069 | 2.7293 | 2.6505 | 2.5718 |
| 120.00 ft | 2.3835 | 2.3546 | 2.3176 | 2.2749 | 2.2281 |
| 140.00 ft | 1.9112 | 1.9185 | 1.9149 | 1.9027 | 1.8838 |
| 160.00 ft | 1.4881 | 1.5203 | 1.5410 | 1.5522 | 1.5554 |
| 180.00 ft | 1.1271 | 1.1735 | 1.2094 | 1.2363 | 1.2553 |

| | 750.00 ft | 800.00 ft | 850.00 ft | 900.00 ft | 950.00 ft |
|---|---|---|---|---|---|
| 0.00 ft | 3.4039 | 3.2421 | 3.0927 | 2.9545 | 2.8259 |
| 20.00 ft | 3.3614 | 3.2039 | 3.0583 | 2.9232 | 2.7975 |
| 40.00 ft | 3.2374 | 3.0923 | 2.9574 | 2.8316 | 2.7141 |
| 60.00 ft | 3.0412 | 2.9152 | 2.7969 | 2.6856 | 2.5808 |
| 80.00 ft | 2.7875 | 2.6852 | 2.5875 | 2.4944 | 2.4056 |

| | | | | | | |
|---|---|---|---|---|---|---|
| 100.00 | ft | 2.4938 | 2.4172 | 2.3423 | 2.2693 | 2.1985 |
| 120.00 | ft | 2.1787 | 2.1275 | 2.0754 | 2.0229 | 1.9705 |
| 140.00 | ft | 1.8597 | 1.8317 | 1.8007 | 1.7675 | 1.7327 |
| 160.00 | ft | 1.5521 | 1.5436 | 1.5307 | 1.5144 | 1.4952 |
| 180.00 | ft | 1.2675 | 1.2739 | 1.2755 | 1.2729 | 1.2668 |

# APPENDIX O

# EXPOSURE, TOXICITY, AND RISK INFORMATION

## Table 0-1 . EXPOSURE ASSUMPTIONS WORKSHEET

| EXPOSURE PATHWAY | CONTACT RATE | CONTACT RATE UNITS CONVERSION FACTOR | HOURS PER 24-HOUR DAY | DAYS PER 7-DAY WEEK | WEEKS PER 52-WEEK YEAR | NUMBER OF YEARS | CONVERSION: YEARS TO TOTAL DAYS | 1/EXPOSURE PERIOD IN DAYS | ABSORPTION FACTOR | 1/BODY WEIGHT | INTAKE FACTOR |
|---|---|---|---|---|---|---|---|---|---|---|---|
| | | | !.....EXPOSURE DURATION.....! | | | | | | | | |
| SOIL | | | | | | | | | | | |
| Soil Intake: (Long-term, adult) (Noncar.) [SIF_N] | 1.00E-01 (g/day) | 1.00E-03 (to kg/day) | | (5)/(7) | (20)/(52) | 7.50E+01 | 3.65E+02 (days/year) | 3.65E-05 | 0.50 | 0.0143 (1/70 kg) | 1.99E-07 (kg/kg-day) |
| Soil Intake: (Long-term, adult) (Car.) [SIF_C] | 1.00E-01 (g/day) | 1.00E-03 (to kg/day) | | (5)/(7) | (20)/(52) | 7.50E+01 | 3.65E+02 (days/year) | 3.65E-05 | 0.50 | 0.0143 (1/70 kg) | 2.10E-07 (kg/kg-day) |
| SOIL | | | | | | | | | | | |
| Soil Intake (Children 1-6 years) (Noncar.) [SDIF_N] | 2.00E-01 (g/day) | 1.00E-03 (to kg/day) | | (5)/(7) | (20)/(52) | 6.00E+00 | 3.65E+02 (days/year) | 5.48E-04 | 0.50 | 0.0625 (1/16 kg) | 1.72E-06 (kg/kg-day) |
| Sediment Intake: (Children 1-6 years) (Car.) [SDIF_C] | 2.00E-01 (g/day) | 1.00E-03 (to kg/day) | | (5)/(7) | (20)/(52) | 6.00E+00 | 3.65E+02 (days/year) | 5.48E-04 | 0.50 | 0.0625 (1/16 kg) | 1.72E-06 (kg/kg-day) |
| DERMAL CONTACT | | | | | | | | | | | |
| Dermal Exposure: child (Soil Contact) (Noncar.) [CHDER_N] (Site II) | 5.00E-01 (g/day) | 1.00E-03 (to kg/day) | | (5)/(7) | (20)/(52) | 6.00E+00 | 3.65E+02 (days/year) | 5.48E-04 | 1.00E-02 (inorganics) 1.00E-1 (PAHs) | 0.0625 (1/16 kg) | 8.59E-08 (kg/kg-day) 8.59E-7 (kg/kg-day) |
| Dermal Exposure: adult (Soil Contact) (Noncar.) [ADER_N] (Site II) | 5.00E-01 (g/day) | 1.00E-03 (to kg/day) | | (5)/(7) | (20)/(52) | 7.50E+01 | 3.65E+02 (days/year) | 5.48E-04 | 1.00E-02 (inorganics) 1.00E-1 (PAHs) | 0.0143 (1/70 kg) | 2.94E-07 (kg/kg-day) (2.94E-6) (kg.kg/day) |

## Table 0-2 TOXICITY MEASURES FOR WASTE SITE EVALUATION: INGESTION AND INHALATION PATHWAYS

| COMPOUND | Noncarcinogenic Effects Oral Route (mg/kg/day) RfD-S (a) | RfD-C (b) | Source EPA RfD Chronic Exp. | Noncarcinogenic Effects Inhalation Route (mg/kg/day) RfD-S (a) | RfD-C (b) | Source EPA RfD Chronic Exp. | Noncarcinogenic Effect of Concern | Carcinogenic Potency Factor (q1*): Oral Exposure (mg/kg/day)-1 | | Source Carcin. Poten. Factor (Oral) | Carcinogenic Potency Factor (q1*): Inhalation Exposure (mg/kg/day)-1 | | Source Carcin. Poten. Factor (Inhalation) |
|---|---|---|---|---|---|---|---|---|---|---|---|---|---|
| INORGANICS | | | | | | | | | | | | | |
| Chromium | 1.00E+01 | 1.00E+00 | e,c | -- | -- | e | Liver | -- | | | -- | | |
| Chromium (VI) | 2.00E-02 | 5.00E-03 | e,c | -- | -- | e | Kidney | -- | | e,h | 4.10E+01 | [A] | e,c |
| Lead | -- | 1.40E-04 | e | -- | -- | e,p | CNS | -- | [B2] | e | -- | [B2] | e |
| Mercury | 3.00E-04 | 3.00E-04 | e,j | 3.00E-04 | 3.00E-04 | e | CNS, Kidney | -- | | | -- | | |
| Nitrate | -- | 1.00E+00 | e | -- | -- | e | Blood | -- | | e | -- | | e |
| PAHs | 4.00E-02 | 4.00E-03 | k,l | -- | -- | k | Body Weight | 1.15E+01 | [B2] | k,m | 6.10E+00 | [B2] | k,m |

RfD, Reference dose for subchronic ( short-term) exposure.

b. RfD,Reference dose for chronic (long-term) exposure.

c. IRIS DATA BASE

e. U.S. EPA. July 1990. Health Effects Assessment Summary Tables (HEAST). Third Quarter FY 1990. OERR 9200.6-303 (90-3)4.

h. There is inadequate evidence for carcinogenicity of this compound by the oral route

p. Final draft Air Quality Criteria Document ( 600/8-83 -028F) declines to derive an air quality criterion for lead

j. Verified; Workgroup concurrence on final data base file and IRIS input pending

k. U.S. EPA. January 1991. Health Effects Assessment Summary Tables (HEAST). FY 1991. OERR 9200.6-303 (91-1).

l. The toxicity information is based on the PAH compound naphthalene.

m. The toxicity information is based on the PAH compound benzo(a)pyrene.

Table )-3 RISK CHARACTERIZATION FOR SITE 11: ADULT INGESTION OF SOILS

| Chemical (a) | Maximum Concentration in Soil (mg/Kg) | Hazard Quotient Noncarcinogenic Effects (b) (Dose/RfD) | Noncarcinogenic Effects: Target Organ System | Excess Lifetime Carcinogenic Risk (b) (Dose x q1*) |
|---|---|---|---|---|
| PAHs | 17.30 | 8.00E-04 | Body Weight | |
| PAHs | 3.00 | 1.47E-04 | Body Weight | 7.25E-06 |
| | | 9.47E-04 | | |

a. The risk estimates are based on the maximum noncarcinogenic and carcinogenic concentrations of PAHs.

b. Dose calculated assuming hypothetical ingestion exposure of residential adults to contaminated surface soil. Exposure assumptions: inadvertent ingestion of 0.1 grams of soil per day, by a 70 kg adult, 5 days per week, 20 weeks per year, for a 75 year lifetime.

Table O-4 RISK CHARACTERIZATION FOR SITE 11: ADULT DERMAL EXPOSURE TO SOILS

| Chemical (a) | Maximum Concentration in Soil (mg/Kg) | Hazard Quotient Noncarcinogenic Effects (b) (Dose/RfD) | Noncarcinogenic Effects: Target Organ System | Excess Lifetime Carcinogenic Risk (b) (Dose x ql*) |
|---|---|---|---|---|
| PAHs | 17.30 | 1.23E-03 | Body Weight | |
| PAHs | 3.00 | 2.21E-04 | Body Weight | 5.92E-05 |
| | | 1.45E-03 | | |

a. The risk estimates are based on the maximum noncarcinogenic and carcinogenic concentrations of PAHs.

b. Dose calculated assuming hypothetical dermal exposure of residential adults to contaminated surface soil. Exposure assumptions: dermal exposure to 0.5 mg/cm2 over 1000 cm2 by a 70 kg adult, 5 days per week, 20 weeks per year, for 75 years.

Table 0-5 RISK CHARACTERIZATION FOR SITE 12: CHILD INGESTION OF SOIL

| Chemical | Mean (a) Concentration in Soil (mg/Kg) | Hazard Quotient oncarcinogenic Effects (b) (Dose/RfD) | Noncarcinogenic Effects: Target Organ System | Excess Lifetime Carcinogenic Risk (b) (Dose x q1*) |
|---|---|---|---|---|
| INORGANICS | | | | |
| Chromium | 55.18 | 9.47E-05 | Liver | |
| Chromium (VI) | 6.82 | 2.34E-03 | | |
| Mercury | 0.27 | 1.55E-03 | CNS, Kidney | |
| Nitrate | 8.90 | 1.53E-05 | Blood | |
| Lead | 47.00 | 5.76E-01 | CNS | |
| Phosphorous | 240.00 | | | |
| Hazard Index: Combined Exposure | | 5.80E-01 | | |
| Excess Lifetime Cancer Risk: Combined Exposure | | | | |

a. Arithmetic mean of surface soil samples. "Not detected" results were treated as one half the limit of detection and included in the calculation of the mean.

b. Dose calculated assuming hypothetical ingestion exposure of residential children to contaminated surface soil. Exposure assumptions: inadvertent ingestion of 0.2 grams of soil per day, by a 16 kg child, 5 days per week, 20 weeks per year, for 5 years.

c. Total chromium was considered to be made up of 11% Cr VI (Jordan, 1990)

d. The value for nitrate-nitrogen was converted to nitrate before using in the risk assessment.

Table 0-6 RISK CHARACTERIZATION FOR SITE 12: CHILD DERMAL EXPOSURE TO SOILS

| Chemical | Mean (a) Concentration In Soil (mg/Kg) | Hazard Quotient oncarcinogenic Effects (b) (Dose/RfD) | Noncarcinogenic Effects: Target Organ System | Excess Lifetime Carcinogenic Risk (b) (Dose x q1*) |
|---|---|---|---|---|
| INORGANICS | | | | |
| Chromium | 55.18 | 4.74E-06 | Liver | |
| Chromium (VI) | 6.82 | 1.17E-04 | | |
| Mercury | 0.27 | 7.73E-05 | CNS, Kidney | |
| Nitrate | 8.90 | 7.64E-07 | Blood | |
| Lead | 47.00 | 2.88E-02 | CNS | |
| Phosphorous | 240.00 | | | |
| Hazard Index: Combined Exposure | | 2.90E-02 | | |
| Excess Lifetime Cancer Risk: Combined Exposure | | | | |

a. Arithmetic mean of surface soil samples. "Not detected" results were treated as one half the limit of detection and included in the calculation of the mean.

b. Dose calculated assuming hypothetical dermal exposure of residential children to contaminated surface soil. Exposure assumptions: dermal exposure to 0.5 mg/cm2 over 1000 cm2 by a 16 kg child, 5 days per week, 20 weeks per year, for 5 years.

c. Total chromium was considered to be made up of 11% Cr VI (Jordan, 1990)

d. The value for nitrate-nitrogen was converted to nitrate before using in the risk assessment.

Table 0-7 RISK CHARACTERIZATION FOR SITE 12: ADULT INGESTION OF SOILS

| Chemical | Mean (a) Concentration in Soil (mg/Kg) | Hazard Quotient oncarcinogenic Effects (b) (Dose/RfD) | Noncarcinogenic Effects: Target Organ System | Excess Lifetime Carcinogenic Risk (b) (Dose x q1*) |
|---|---|---|---|---|
| INORGANICS | | | | |
| Chromium | 55.18 | 1.08E-05 | Liver | |
| Chromium (VI) | 6.82 | 2.68E-04 | | |
| Mercury | 0.27 | 1.77E-04 | CNS, Kidney | |
| Nitrate | 8.90 | 1.75E-06 | Blood | |
| Lead | 47.00 | 6.59E-02 | CNS | |
| Phosphorous | 240.00 | | | |
| Hazard Index: Combined Exposure | | 6.63E-02 | | |
| Excess Lifetime Cancer Risk: Combined Exposure | | | | |

a. Arithmetic mean of surface soil samples. "Not detected" results were treated as one half the limit of detection and included in the calculation of the mean.

b. Dose calculated assuming hypothetical ingestion exposure of residential adults to contaminated surface soil. Exposure assumptions: Inadvertent ingestion of 0.1 grams of soil per day, by a 70 kg adult, 5 days per week, 20 weeks per year, for a 75 year lifetime.

Table 0-8

RISK CHARACTERIZATION FOR SITE 12: ADULT DERMA EXPOSURE TO SOILS

| Chemical | Mean (a) Concentration in Soil (mg/Kg) | Hazard Quotient oncarcinogenic Effects (b) (Dose/RfD) | Noncarcinogenic Effects: Target Organ System | Excess Lifetime Carcinogenic Risk (b) (Dose x q1*) |
|---|---|---|---|---|
| INORGANICS | | | | |
| Chromium | 55.18 | 1.62E-05 | Liver | |
| Chromium (VI) | 6.82 | 4.01E-04 | | |
| Mercury | 0.27 | 2.65E-04 | CNS, Kidney | |
| Nitrate | 8.90 | 2.62E-06 | Blood | |
| Lead | 47.00 | 9.88E-02 | CNS | |
| Phosphorous | 240.00 | | | |
| Hazard Index: Combined Exposure | | 9.95E-02 | | |
| Excess Lifetime Cancer Risk: Combined Exposure | | | | |

a. Arithmetic mean of surface soil samples. "Not detected" results were treated as one half the limit of detection and included in the calculation of the mean.

b. Dose calculated assuming hypothetical dermal exposure of residential adults to contaminated surface soil. Exposure assumptions: dermal exposure to 0.5 mg/cm2 over 1000 cm2 by a 70 kg adult, 5 days per week, 20 weeks per year, for 75 years.

# APPENDIX P

## RESPONSE TO USEPA AND MEDEP COMMENTS: DRAFT FINAL RI REPORT

UNITED STATES ENVIRONMENTAL PROTECTION AGENCY
REGION I
J.F. KENNEDY FEDERAL BUILDING, BOSTON, MASSACHUSETTS 02203-2211

October 17, 1990

Mr. James Shafer (Code 1421)
Northern Division
Naval Facilities Engineering Command
U.S. Naval Base, Bldg. 77 Low
Philadelphia, PA 19112-5094

Subject: EPA Comments
Draft Final Remedial Investigation Report
Naval Air Station Brunswick
Brunswick, Maine

Dear Jim:

The United States Environmental Protection Agency (EPA) has received and reviewed the document entitled "Draft Final Remedial Investigation (RI) Report" dated August 1990, for the Naval Air Station Brunswick in Brunswick, Maine. The Risk Assessment was submitted as an appendix to the RI report and was also reviewed by EPA. The EPA had previously reviewed the Draft RI report and submitted comments to the Navy in a letter dated May 17, 1990.

EPA's comments on the RI report are presented separately for each of the sites under investigation and are included in Attachment I. The ARARs section of the Draft Final RI went through a more extensive review than had previously been performed. Comments pertaining to the ARAR section are included in Attachment II. However, as noted in Section 6.6(b) of the Federal Facility Agreement, "ARAR identification is necessarily an iterative process until a ROD is issued." Therefore, EPA reserves the right to review all ARARs again in future deliverables. Comments regarding the Risk Assessment portion of the RI are provided in Attachment III.

EPA notes that field work is currently ongoing to collect additional data. This data will provide information necessary to fill data gaps identified in the Draft RI; initiate RI activities at sites not included in the existing RI documents; and provide data necessary to move forward with the feasibility study for several of the sites. Therefore, EPA reserves the right to re-examine conclusions presented in this RI upon review of new data. Should EPA feel that any of these conclusions are no longer valid EPA will provide additional comments to the Navy.

The Navy's responses to the comments transmitted with this letter should be included in the Remedial Investigation Addendum which



PRINTED ON RECYCLED PAPER

the Navy will be submitting to the EPA and the Maine Department of Environmental Protection (DEP).

Should you require clarification regarding any of the comments presented, please contact me at Meghan Cassidy, the Remedial Project Manager, at(617)573-5785.

Sincerely,

Mary Jane O'Donnell

Mary Jane O'Donnell, Chief
ME & VT Superfund Section

cc: Ted Wolfe/Maine DEP
Cmdr. Ron Terry/NASB
Mel Dickenson/EC Jordan
Meghan Cassidy/US EPA
Jui-yu Hsieh/US EPA
Ann Johnson/SAIC

## ATTACHMENT I

The comments provided below pertain to Sections 6.0 through 15.0 of the Draft Final Remedial Investigation Report (August 1990). The Draft Final RI report was submitted by the U.S. Department of the Navy for the Naval Air Station Brunswick, Brunswick, Maine. The report was prepared for the Navy by E.C. Jordan of Portland, Maine.

Section 6.0: Orion Street Landfill North (Site 1) and Hazardous Waste Burial Area (Site 3)

1) Page 6-6, Paragraph 5: EPA notes that the last sentence in this paragraph is inaccurate based on information collected to date.

2) Page 6-16, Paragraph 2: As stated above, current field work has shown that the second to last sentence in this paragraph is no longer accurate.

3) As has been stated in the past, the manner in which the Piper diagrams have been used provides gross estimates only.

4) A perched groundwater table or a groundwater high was reportedly encountered in several test pits excavated at the Site 1 landfill area. The feasibility study for Site 1 soils must take this shallow groundwater into account when evaluating the remedy. Specifically, whether installation of a cap would place more of the waste beneath the water table.

5) Further discussion regarding whether the elevation of the seeps associated with Sites 1 and 3 (as well as Site 2) changes seasonally is needed.

6) The "Summary and Conclusions" section uses an average depth of between 15 and 20 feet to calculate the volume of refuse in the landfills at Sites 1 and 3. This value will have to be furthered defined and justified in the Feasibility Study.

Section 7.0: Orion Street Landfill South (Site 2)

7) Page 7-1, Paragraph 1: This paragraph states that "refuse is exposed along the eastern face of the landfill, otherwise the landfill has been covered with soil...". This statement is inaccurate since landfill remnants are visible at the surface throughout Site 2.

8) In light of the fact that a new seep (LT/SD-203) was identified, the recommendation for a no-action remedy is premature.

9) At this point insufficient data has been presented to support the proposed no-action remedy for Site 2. Further discussion

will be required and as has been previously stated further analysis of possible alternatives is warranted.

10) The "Summary and Conclusions" section states that "Mercury detected in LT-203 in Round IV indicates that Site 2 contamination has migrated farther north and west than previously understood". This statement indicates that additional study may be necessary and that the site may not be adequately understood.

Section 8.0: Acid/Caustic Pit (Site 4)

11) In instances where the source area is located under an existing structure, as is the case at Site 4, the Record of Decision (ROD) must call for further investigation and remedial action if warranted (through a new or amended ROD) if the buildings are ever removed.

Section 10.0: Perimeter Road Disposal Site (Site 8)

12) Provide details of site-specific factors that will determine whether aerobic or anaerobic degradation of DDT will occur and provide estimates of the rates of these processes.

13) Existing data appears to indicate that shallow groundwater is not moving towards the Jordan Avenue wells. However, following review of analytical results from Site 8 observation wells further discussion regarding this issue may be warranted.

14) EPA notes that the Navy has agreed to monitor pumping of the Jordan Avenue wells and Site 8 monitoring/observation wells to provide additional information regarding any potential hydraulic connection between the two areas. Should this study indicate a hydraulic connection does exist, EPA may require additional work at Site 8.

15) Zinc can not be disregarded as a site related contaminant due to its detection in leachate, leachate sediment, surface water and surface water sediment. Risk calculations must be calculated for zinc in order to determine whether zinc will require remediation.

16) The RI report must make it clear that the Piper diagrams presented provide conceptual information only.

Section 11.0: Neptune Road Disposal Site (Site 9)

17) In instances where the source area is located under an existing structure (ie., old incinerator and dump areas beneath the barracks buildings) the Record of Decision (ROD) must call for further investigation and remedial action if warranted (through a new or amended ROD) if the buildings are ever removed.

18) As stated in EPA's comments on the Draft RI report, the lack of mercury detection during sampling rounds III and IV does not justify the assumption that mercury detected just above the detection limit in rounds I and II is invalid as a possible site contaminant. Analytical results of sampling being carried out this field season will have to be examined and the validity of mercury data re-examined.

Section 12.0: Fire Training Area (Site 11)

19) The ongoing use of the Fire Training Area (FTA) will need to be considered when evaluating remedies during the feasibility study.

20) Provide the regulatory program (ie., state UST regulations) which apply to the underground storage tank used at the FTA.

Section 13.0: DRMO Area (Site 13)

21) Review of analytical data being collected during this field season will be needed before it can be accurately determined whether pesticides in groundwater at Site 13 are a contaminant of concern.

Section 15.0: Baseline Public Health and Environmental Risk Assessment

22) The RI Addendum must include additional information to describe how the selection of contaminants of concern was conducted specifically for NASB.

23) Page 15-8, Paragraph 6: The RI Addendum must include further discussion and present the reasons why the chemicals listed in this paragraph were associated with public health risk. In particular, provide the rationale for including 1,1-dichloroethane when it does not have either a federal or state standard. Also, clarify why 1,2- dichloroethane is listed as a chemical of concern at the landfill plume in this paragraph but Table Q-29 indicates it has never been detected above any standards.

24) Page 15-10, Paragraph 1: The RI Addendum must clarify why 1,1-dichloroethane and lead are included as chemicals of concern in groundwater at Sites 4, 11 and 13. Inclusion of these chemicals appears inconsistent with Table Q-29 in Appendix Q since 1,1-dichloroethane does not have any federal or state standards and lead has not exceeded either state or federal regulations at the eastern plume source (i.e., Site 4, 11 and 13) or in the "eastern plume downgradient".

## ATTACHMENT II

The comments provided below pertain to Section 3.0: Applicable or Relevant and Appropriate Requirements of the Draft Final Remedial Investigation Report (August 1990). The Draft Final RI report was submitted by the U.S. Department of the Navy for the Naval Air Station Brunswick, Brunswick, Maine. The report was prepared for the Navy by E.C. Jordan of Portland, Maine.

1) State regulations should be listed as ARARs only if they are substantive requirements.

2) If any federal program has been delegated to the state, the state program is the one that should be referenced.

**Chemical-Specific ARARs, Table 3-1**

3) The "Requirement Synopsis" for the Maine Drinking Water Rules does not present an accurate summary of the National Contingency Plan (NCP) requirements. According to Section 300.400(g)(5) of the NCP, state standards may be applicable or relevant and appropriate if they are: i) promulgated, i.e., legally enforceable and generally applicable; ii) identified by the state in a timely manner; and iii) more stringent than federal requirements.

4) The reference to Maine rules on testing of private water systems is listed as a "State Guidance". This designation is confusing since, in general, state guidances are not ARARs, but may be TBCs. However, from the description of the Maine rules cited here it appears that they are ARARs. This issue should be clarified in the Feasibility Study.

5) NESHAP (National Emissions Standards for Hazardous Air Pollutants) requirements for benzene should be examined during the Feasibility Study to clarify that no part of the NESHAP for benzene could be considered relevant and appropriate.

**Location-Specific ARARs**

<u>Wetlands</u>

6) It should be noted that if there is a discharge of dredged or fill material into a wetland that is on-site, permits will not have to be obtained, although all substantive requirements of the permit must be met. However, it should be emphasized that the Navy should be evaluating other alternatives which would not discharge into wetlands, to the greatest extent possible.

7) Table 3-3 should be revised by deleting the citations to NEPA and the Wetlands Executive Order and refer to 40 CFR Part 6, Appendix A instead.

8) Examine whether the Maine Natural Resources Protection Act is a procedural or substantive statute. Also, provide the basis for your determination. If it is procedural, it would not be an ARAR. Also, a permit from the Maine Bureau of Land Quality Control will not be required if the activity being undertaken is "on-site" (see Sections 300.5 and 300.400(e)(1) of the NCP for definition of "on-site").

9) If the Maine Hazardous Waste Management Rules supplement RCRA hazardous waste regulations it should be stated in the table.

Floodplains

10) The checklist in Table 3-2 does not list floodplain as a site feature, but floodplain ARARs are listed in Table 3-3. Are portions of the site considered to be in floodplain areas?

11) Table 3-3 should be revised by deleting the citations to NEPA and the Floodplains Executive Order and refer to 40 CFR Part 6, Appendix A instead.

12) Maine Natural Resources Protection Act - see comment 8 above.

13) Maine Hazardous Waste Management Rules - see comment 9 above.

Mere Brook

14) Maine Natural Resources Protect Act - see comment 8 above.

15) Maine Hazardous Waste Management Rules - see comment 9 above.

Other Natural Resources

16) A permit from the Bureau of Land Quality Control will not be required if the activity is "on-site".

17) Town ordinances are not ARARs. The state guidelines may be ARARs only if they meet the standard under Section 300.400(g)(5) of the NCP.

18) If the Maine Inland Fisheries and Wildlife Laws and Regulations are more stringent than the Endangered Species Act it should be stated here.

**Action-Specific ARARs**

19) EPA will continue to review which RCRA requirements will or may be ARARs. Additional comments will be made as necessary in future deliverables.

20) Any off-site discharge to surface water is required to meet

both administrative and substantive NPDES requirements. The xplanation under "Consideration in the RI/FS" misstates the requirements and should be revised.

21) CERCLA wastewater may be discharged to a POTW that does not have an approved pretreatment program, provided that an evaluation is made to determine if it has the mechanisms available to meet the requirements of the national pretreatment program. Introduction of pollutants which cause Pass Through or Interference are prohibited (40 CFR 403.5). Also, discharges must comply with any local POTW regulations. Under some circumstances, RCRA permit-by-rule requirements will have to be complied with if there are hazardous wastes being discharged to a POTW (40 CFR 270.60).

22) What is the Maine DEP, Bureau of Water Quality Control, Policy Number 10? If this is not a state standard meeting the requirements of section 300.400(g)(5) of the NCP, then it is not an ARAR. If it meets the NCP requirements, a citation must be given.

## ATTACHMENT III

The comments provided below pertain to Volume 4, Appendix Q, Risk Assessment of the Draft Final Remedial Investigation Report (August 1990). The Draft Final RI report was submitted by the U.S. Department of the Navy for the Naval Air Station Brunswick, Brunswick, Maine. The report was prepared for the Navy by E.C. Jordan of Portland, Maine.

1) Page Q-3, Last Paragraph: Biodegradation rather than bioaccumulation is more of a concern in the soil medium. Therefore, in the selection of the contaminants of concern, biodegradation must be considered.

2) Page Q-53, Paragraph 5: Add Sites 11 and 13 to the list of sites where worker contact with surface and subsurface soils is possible. Underground storage tanks, as well as the associated piping, exist at these sites. The operation and maintenance of these tanks could result in worker exposure.

3) Page Q-53, Paragraph 5: Worker exposure <u>must</u> be assessed regardless of the restrictions which have been instituted by the base's Public Works Office.

4) Page Q-55, Paragraph 4: This paragraph indicates that all groundwater beneath Sites 1 and 3 discharges to Mere Brook. Results from the RI report indicate that some portion of th groundwater beneath Sites 1 and 3 flows beneath Mere Brook. Therefore, potential receptors beyond Mere Brook must be examined and evaluated.

5) Pages Q-57 and Q-58, Table Q-22: The following comments pertain to Table Q-22. The table must be revised and any affected values recalculated.

   - The unit for <u>concentration in medium</u> in equations 3 and 4 should be ug/l, not ug/g.

   - The factor "yr. exposure/75 years" must be removed. This is not an appropriate averaging period for noncarginogenic effects.

6) Page Q-65, Paragraph 4: The second sentence of this paragraph is not in accordance with what is shown in Table Q-29 for the "landfill plume". This sentence should be rewritten as follows: "In addition, methylene chloride and nickel were detected at concentrations exceeding the associated MEGs and therefore present a public health risk.

7) Page Q-65, Paragraph 5: Add a discussion about why lead, cadmium and 1,1-DCA were associated with a public health risk. For example, since there is no MCL or MEG for 1,1-DCA, why is the concentration of this compound associated with a public health risk?

8) Page Q-67, Table Q-29: This table indicates that vinyl chloride was not detected in Site 9 groundwater. This is inaccurate since vinyl chloride has been detected at Site 9 and concentrations were above MCLs. The table must be corrected.

9) Page Q-68, Paragraph 1: According to Table Q-29, lead and cadmium were listed as non-detects (ND). This paragraph indicates that they exceed MCLs. Revise the table to correspond with this paragraph.

10) Page Q-68, Paragraph 3: According to Table Q-29, barium does not exceed the MCL, but this paragraph states that it does. Revise either the table or this paragraph whichever is appropriate.

As stated previously, this paragraph and the information presented in Table Q-29 and in the RI for vinyl chloride are contradictory. Revise the table.

11) Page Q-68, Paragraph 7: Worker exposure is not a future exposure scenario. Worker exposure must be considered as a current scenario.

12) Page Q-69, Paragraph 4: The revised NCP specifies that the point of departure for lifetime cancer risk is $10^{-6}$. This must be stated in this paragraph. Reference to the EPA Superfund Public Risk Evaluation Manual (USEPA 1986) must be eliminated as this document has been superseded by the EPA Risk Assessment Guidance for Superfund, Volume I and II (USEPA 1989).

13) Page Q-70, Paragraph 3: The revised NCP now specifies an acceptable excess lifetime risk of cancer of $10^{-4}$ to $10^{-6}$, not $10^{04}$ to $10^{-7}$ as stated here. Revise this paragraph to reflect the updated NCP.

14) Page Q-70, Paragraph 7 and Table Q-31: Exposure to surface water at Site 8 must be assessed under current use for the 7 to 12 age group.

<u>Environmental Risk Assessment</u>

15) Page Q-85, Paragraph 3: As stated in EPA's previous set of comments, beryllium is a priority pollutant under the Clean Water Act and toxicity data are available for freshwater species. Although water quality criteria have not been derived, the toxicity information that is available should be used in the baseline risk assessment. EPA OWRS indicates that acute and chronic toxicity to freshwater species (for Be) occurs at concentrations as low as 130 and 5.3 ug/l, respectively (USEPA 1987 <u>Quality Criteria for Water 1986.</u> EPA 440/5-86-001). Beryllium was detected at 2.25 mg/l at NASB during the RI. Since this concentration is very close

to the chronic toxicity value beryllium should not be disregarded as a possible contaminant of concern.

16) Page 107, Paragraph 2: This paragraph states that bioavailability of PAHs is minimal due to rapid metabolism and excretion by organisms. Later sections of the Environmental Risk Assessment (specifically p. Q-113) indicate that PAHs can bioaccumulate. This contradiction must be clarified.

17) The following comment was previously submitted in NOAA's letter dated May 1, 1990 which was attached to EPA's comments on the Draft RI and RA.

    The ecological risk assessment reported that Sites 8 and 9, based on concentrations of contaminants in surface water and sediment samples collected at or near these sites, could be negatively impacting surface waters on or near these sites. Impact to NOAA resources utilizing the Androscoggin Riv r is more problematic. Additional sampling locations along the surface water drainage leading from Site 8 to the River is necessary to determine the extent and nature of the contamination and potentially estimate ecological risk.

RESPONSE TO USEPA COMMENTS
DRAFT FINAL RI REPORT

ATTACHMENT I

Section 6.0: Orion Street Landfill North (Site 1) and Hazardous Waste Burial Area (Site 3)

1) The statement concerning increased clay and silt at MW-207A and boring C5 was accurate. That the increased clay and silt act as a hydraulic barrier to eastward groundwater flow has been confirmed from the results of the Post Screening Field Program (Jordan, 1991).

2) See comment Number 1.

3) The Piper diagrams presented in the Draft Final FI report present general trends, and are not quantitative representations.

4) The shallow groundwater observed in Site 1 test pits will be considered for the Sites 1 and 3 FS study. The effects of a cap will be evaluated.

5) The elevation of seeps associated with Sites 1, 2, and 3 has not been observed to change seasonally. Most of the seeps occur very near the surface water elevation. One seep, LT-303 does occur at an elevation approximately 20 feet above the surface water. This higher elevation seep is believed to be controlled by a local silt and clay layer observed in MW-202A.

6) The depth of the landfill at Sites 1 and 3 will be discussed in the FS.

Section 7.0 Orion Street Landfill South (Site 2)

7) Landfill remnants are not visible throughout Site 2. Refuse is exposed along the eastern and southeastern face of the landfill, but little if any other refuse is observed in other portions of the site. The foundations of the incinerator are exposed in the northern area of the site, but refuse is not present throughout the site.

8) The no-action remedy described in the Draft FS Screening report was modified in the Draft Final FS Screening report, and currently includes a long term monitoring effort.

9) See comment number 8

10) The extent of the Site 2 source area is well defined by the magnetometer survey, as magnetic anomalies are not observed northwest of Site 2. The identification of LT-203 further northwest of Site 2, and the mercury detected at that seep clearly indicates that migration of Site 2 contamination has occurred in this area. Seeps are not observed northwest of LT-203, and LT-203 therefore defines the northwest migration of Site 2 contamination. The presence of these seeps northwest of Site is believed to be related to large slump structures

MD049101

upgradient of LT-203, between the seep location and Site 2.

Section 8.0 Acid/Caustic Pit (Site 4)

11) The ROD for Site 4 will include further investigation and remedial action (if warranted) if Building 584 is ever removed.

Section 10.0 Perimeter Road Disposal Site (Site 8)

12) In soils DDT will degrade to both DDE and DDD. Degradation to DDE typically occurs in an aerobic environment, and degradation to DDD is associated with an anaerobic environment. Actual rates of biodegradation are poorly understood due to the fact that no microorganism has been found to utilize DDT as the sole carbon source. DDT degradation products, DDE and DDD, are not observed at Site 8. At Site 9 DDT and DDE are observed in surface soils where aerobic processes would be expected. The restriction of DDT to surface and near surface Site 8 soils would appear to favor ultimate degradation to DDE.

13) The observation wells were sampled and along with groundwater flow information demonstrate that contamination associated with Site 8 does not migrate towards the observation wells or the Jordan Avenue wellfield. Long term water level monitoring of Site 8 wells was also accomplished during the Post-Screening Field Program. The results are discussed in the Supplemental RI report and indicate that there is no hydrologic connection between Site 8 and the Jordan Avenue wellfield.

14) Water level monitoring was accomplished and the results indicate that a hydrologic connection between the Jordan Avenue wellfield and Site 8 does not exist (see comment 13)

15) Zinc is not believed to be a site contaminant. It is not observed in monitoring wells directly downgradient of the site (e.g, MW-810 and MW-811), but it is observed in wells upgradient of the site (MW-801). Similarly zinc is observed in surface water/sediment locations both upgradient and downgradient of the site, and the range in concentration is the same for both upgradient and downgradient sampling locations. These observations strongly suggest that zinc is not related to the Site 8 source area. The higher values of zinc observed at the seep locations is a function of the low pH of the leachate. The source for the zinc is related to the soils at Site 8. Silt- and clay-rich soils occur at shallow depths at Site 8 and characterize the stream beds. Zinc does occur in these soils and acts as a source for the observed zinc at Site 8.

16) The Piper diagrams show for Site 8 surface water demonstrate qualitative relationships among the inorganic parameters.

Section 11.0 Neptune Road Disposal Site (Site 9)

17) The ROD for Site 9 will include further investigation and remedial action (if warranted) if barracks buildings are ever removed.

MD049101

18) Mercury that was reported during Rounds I and II at MW-904, and had concentrations of 0.22-0.23 mg/l. Results from subsequent sampling rounds (III and IV) did not detect mercury. The levels of mercury identified at MW-904 are very low and occur at concentrations just above the method detection limit. The concentration of mercury at MW-904 is well below the MCL (2 mg/l) and is the only well where mercury was reported. Although mercury may be considered as a site contaminant at Site 9, VOCs in Site 9 groundwater exceed MCLs and will control the public health groundwater risks at Site 9.

Section 12.0 Fire Training Area (Site 11)

19) NAS Brunswick closed the Fire Training Area during the fall of 1990.

20) The regulatory program that applies to the UST at the FTA is Chapter 691 of the Maine underground oil storage tank regulations (MEDEP Regulations, Chapter 691).

Section 13.0 DRMO Area (Site 13)

21) Low levels of pesticides were detected in groundwater from MW-1303. Both beta-BHC (0.12 mg/l) and DDT (0.54 mg/l) were reported in the sample, but were not detected in the duplicate sample. Results from Round V (fall 1991) did not detect pesticides at MW-1303 indicating that pesticides are not a contaminant of concern at Site 13.

Section 15.0 Baseline Human Health and Environmental Risk Assessment

22) Section 5.9 of the Risk Assessment Guidance for Superfund Volume I, "Further Reduction in the Number of Chemicals" (RAGs; USEPA, 1989) was followed to select contaminants of concern at NAS Brunswick. A discussion of the selection process is included in Appendix Q on pages Q-3 through Q-7 of the Draft Final RI report.

23) Although 1,1-dichloroethane (1,1-DCA) does not have either a federal or state standard, there is a health-based Reference Dose (RfD) for this compound (0.1 mg/kg-day). 1,1-DCA was selected as a contaminant of concern to represent the toxicity from the potential exposure to chlorinated compounds. The RfD of 0.1 mg/kg-day converts to an "acceptable" groundwater concentration of 3.5 mg/l; assuming a 70 kg adult consumes 2 liters of water per day. Since 1,1-DCA was not detected in excess of 3.5 mg/l, there is no need to include it as a contaminant of concern. No response objectives will be developed for this compound.

On page 15-8, 1,2-DCA is a typographical error and should read 1,2-DCE.

24) 1,1-DCA was included as a contaminant of concern to assess the toxicity from potential exposure to chlorinated compounds. 1,1-DCA was not detected in excess of 3.5 mg/l which is the converted "acceptable" groundwater concentration based on a RfD of 0.1 mg/kg-day.

MD049101

The inclusion of lead as a contaminant of concern was based on the concentrations detected in groundwater near the DRMO (Site 13). Since the Eastern Plume will be addressed as a single operable unit (i.e., will not be segregated into source area and downgradient) it is appropriate to retain lead as a contaminant of concern.

MD049101

Attachment II

1) This comment has been incorporated in the Supplemental RI Report (see Section 2.0)

2) This comment has been incorporated in the Supplemental RI Report.

3) This comment has been incorporated in the Supplemental RI Report.

4) This issue has been clarified in the Supplemental RI and Feasibility Study reports.

5) The NESHAP requirement has been included in the Supplemental RI.

6) This comment has been incorporated in the Supplemental RI.

7) Table 2-3 has been revised and is presented in the Supplemental RI.

8) The basis for including the Maine Natural Resource Protection Act has been included in Table 2-4 and the text modified to reflect that no permits are required.

9) The Maine Hazardous Waste Management Rules do supplement RCRA. This has been included in Table 2-4 of the Supplemental RI.

10) Floodplains are not a site feature. However, because floodplains are located downstream of the Site, and potential remedial activities could impact these areas, floodplain ARARs were listed.

11) Table 3-3 in the Supplemental RI, has been revised based on this comment.

12) The basis for including the Maine Natural Resource Protection Act has been included in Table 3-4 of the Supplemental RI.

13) The basis for including the Maine Hazardous Waste Management Rule has been included in Table 3-4, of the Supplemental RI. These regulations supplement RCRA.

14) The basis for including the Maine Natural Resource Protection Act has been included in Table 3-4 of the Supplemental RI.

15) The basis for including the Maine Hazardous Waste Management Rule has been included in Table 3-4 of the Supplemental RI.

16) This comment has been incorporated into Table 3-4 of the Supplemental RI.

17) This has been corrected in Table 3-4 to read "State Guidance - To Be Considered."

18) This has been included in Table 3-4 of the Supplemental RI.

MD049101

19) E.C. Jordan recognizes that EPA will continue to review the RCRA requirements, and that additional comments may be made by EPA as necessary.

20) The requirements of the off-site discharge to surface water has been clarified in the Supplemental RI.

21) The discussion of discharge to POTWs has been modified.

22) This comment has been addressed in Table 3-5 of the Supplemental RI.

MD049101

Attachment III

1. The biodegradation of a contaminant is considered during the selection of contaminants of concern by evaluating the contaminants persistence in the environment. Biodegradation was considered and discussed in the fate and transport section of the Draft Final RI report. Bioaccumulation is also an important factor to consider when evaluating the potential movement of a contaminant within a food web. Chemical specific bioaccumulation factors are available for many contaminants and are therefore used to select contaminants of concern.

2. Worker exposure to soil contamination is evaluated for Site 11 and is presented in the Supplemental RI. It should be noted that the USTs at Site 13 have been removed, the most recent removal activity occurring during the Fall 1989.

3. Residential and/or recreational land-use exposure scenarios provide a more conservative estimate of potential risk to human health than worker-based scenarios and were therefore the focus of the risk assessment. However, worker exposure at Site 1 and 3 were evaluated to provide a conservative estimate of potential worker exposure at all of NAS Brunswick. Sites 1 and 3 contain the greatest potential for exposure and the most significant subsurface contamination of all sites evaluated at NAS Brunswick. A worker scenario was also developed for Site 11, based on additional data collected during the Fall of 1990, and is presented in the Supplemental RI.

4. Based on hydrogeologic information the groundwater directly downgradient of the landfill area discharges to Mere Brook. Based on the local discharge at Sites 1 and 3 and Site 2 it is unlikely that contaminated groundwater is flowing beneath the brook. However, since contaminant concentrations in excess of state and federal standards have been detected in the shallow aquifer at Sties 1 and 3, remedial response actions are being developed to reduce contaminant levels in this resource. Downgradient receptors will be protected by these remedial actions. Additional groundwater studies have been conducted east of Site 1 and 3 (i.e., Eastern Plume) and remedial actions are also being developed for this area of the base.

5. a - This is a typographical error that does not affect any calculations.
   b - This was a typographical error. Noncarcinogenic body dose levels were not averaged over a 75-year lifetime as indicated in Table Q-11.

6. Methylene chloride and nickel were both detected in excess of their respective MEG values. Response objectives have been developed for both of these compounds.

7. As discussed in Comment 24 Attachment I: Potential exposure to 1,1-DCA does not present a human health risk since no concentrations were detected in excess of the converted RfD value. Lead was detected in

MD049101

excess of its MCL in the "source" area (i.e., Site 13) of the Eastern Plume. Because the Eastern Plume is considered to be a single operable unit, no distinction between the "source area" and "downgradient" area is being made. Therefore it is appropriate to include lead as a contaminant of concern.

8. This was an omission and will be corrected in the Feasibility Study reports. Vinyl chloride has been detected at concentrations in excess of its MCL and is a contaminant of concern for Site 9. Remedial action objectives are being developed to address the presence of this compound in the groundwater.

9. The groundwater data for the "source" area of the Eastern Plume (i.e., Site 4, 11, and 13) show maximum concentrations of lead at 28 ug/L and cadmium at 20.2 ug/L. These concentrations exceed their respective MCLs. Concentrations of lead and cadmium downgradient of Site 4, 11, and 13 were below MCLs.

10. The text on page Q-68 is in error, barium was not detected in groundwater at Site 9 in excess of its proposed MCL of 2.0 mg/L. As stated, vinyl chloride was detected in excess of its MCL at Site 9.

11. There are currently no construction activities or worker exposure of any sites under consideration at NAS Brunswick. The worker scenarios presented in the risk assessment are relevant for both current and future exposures since no assumptions are made regarding the decrease in contaminant levels that would result through degradation or contaminant transport. Future exposure point concentrations are based on current contaminant levels detected in surface and subsurface soils.

12. The $10^{-6}$ point of departure is discussed and used in the Feasibility Study to develop remedial alternatives. The risk assessment was conducted in accordance to the RAG Volume I. The reference to the Superfund Public Health Evaluation Manual was an error.

13. The risk range of $10^{-4}$ to $10^{-6}$ specified in the revised NCP is included in the Feasibility Study Reports and is used to evaluate remedial actions.

14. Exposure to surface water and sediments were evaluated for Site 8. There were no carcinogenic compounds detected in the surface water at Site 8, therefore no quantitative risk evaluation was performed. Table Q-31 should show ND (not-detected) instead of the NA (not applicable).

MD049101

Environmental Risk Assessment

15. Beryllium was detected only in sediment samples and at a maximum concentration of 2.25 mg/kg. Beryllium was not detected in surface water (CRDL = 5 ug/l) indicating minimal to no exposure to this compound. The chronic toxicity values for beryllium based on dissolved concentrations in water are not directly applicable to sediment concentrations and should not be used to evaluate potential risk from exposure to sediments.

16. The current understanding is that PAHs probably do not bioaccumulate in terrestrial animals because metabolism and excretory processes proceed fairly rapidly. However, very fe studies have been conducted, and one would a priori suppose that these compounds could bioaccumulate based on the large $K_{ow}$S.

17. Based on the results of the four sampling rounds, it appears that minimal offsite migration of PAHs is occurring (no PAHs detected in SD-817, which is farther from Route 24 than SD-818). Secondly, although the concentrations detected at SD-818 during Round 1 were of sufficient magnitude to affect stream biota, it is unreasonable to suspect that Androscoggin River biota could similarly be impacted due to the tremendous dilution which would occur should any contamination migrate to the River.

Despite the lack of analytical data from the Round IV sampling round, there is evidence that contamination emanating from Site 8 and/or from highway runoff is generally being attenuated in the areas downstream from the site. The following table summarizes the extent of contamination detected in sampling locations in the vicinity of Site 8 to the north of Route 28.

| CHEMICAL CLASS | COMPOUND | FREQUENCY OF DETECTION | RNDs MAXIMUM | DETECTED |
|---|---|---|---|---|
| Surface Water (units in ug/L): | | | | |
| Metals | Aluminum | 1/6 | 374 | III |
| | Cyanide | 1/6 | 128 | II |
| | Lead | 1/6 | 8.2 | II |
| | Zinc | 4/6 | 163 | I,II,III |
| Sediment (units in ug/kg except for metals which are in mg/kg) | | | | |
| SVOCs | Various PAHs | 1/7 | 2400-16000 | I |
| Metals | Aluminum | 6/6 | 6740 | I,II,III |
| | Arsenic | 2/6 | 5.3 | I |
| | Cadmium | 1/6 | 2.1 | I |
| | Chromium | 6/6 | 16 | I,II,III |
| | Lead | 6/6 | 37 | I,II,III |
| | Zinc | 6/6 | 54 | I,II,III |

Except for the metal data, there is no consistent pattern of contamination in the downstream locations. As pointed out in the NOAA memo, the AWQC for aluminum, cyanide, lead and zinc were all exceeded at least once, and all but cyanide were consistently detected in associated sediment. As concluded in the Ecological Risk Characterization in the RI, there appears to be a strong likelihood that some deleterious impacts are occurring in the aquatic habitat downstream from Site 8. With regard to potential contamination of the Androscoggin River, however, the impact that these metals might be having upon river biota would seem to be insignificant when the effects of dilution are considered. The flow rate of the Androscoggin is on the order of 100,000 times that of the stream in question.

STATE OF MAINE
# Department of Environmental Protection

MAIN OFFICE: RAY BUILDING, HOSPITAL STREET, AUGUSTA
MAIL ADDRESS: State House Station 17, Augusta, 04333
207-289-7688

JOHN R. McKERNAN, JR.
GOVERNOR

DEAN C. MARRIOTT
COMMISSIONER

October 10, 1990

Mr. James Shafer
Department of the Navy, Northern Division
Naval Facilities Engineering Command
Building 77-L
Philadelphia Naval Shipyard
Philadelphia, PA 19112-5094

RE: Naval Air Station Brunswick, Draft Final Remedial Investigation Report, August 1990, by E.C. Jordan Co.

Dear Mr. Shafer:

The Maine Department of Environmental Protection (DEP) has completed its review of the Draft Final Remedial Investigation Report (RI) including the Public Health and Environmental Risk Assessment (RA). This RI was submitted to the DEP by E.C. Jordan Co. on August 9, 1990 on behalf of the U.S. Department of the Navy for the Naval Air Station Brunswick (NASB) Site.

The DEP continues to have concerns regarding both the RI and the RA Reports. The Department does not approve of the Site 2 investigation for reasons outlined in this comment letter. Conditional approval can be given to the RI for the other sites, provided that DEP comments are considered and incorporated into the final report.

The RA is conditionally approved, however comparison of the Draft Final RI Risk Assessment with the previous draft showed that some the DEP comments were not addressed. These comments have been restated in this letter. If reasons exist for not including these comments into the final report, then a separate letter explaining the Navy's assessment of DEP comments will be necessary before final approval will be given.

General Comments Draft Final RI Report:

Review of Site 2 results show that leachate sampling from the three identified leachate seeps indicated the presence of elevated levels of a number of metals including beryllium, chromium, cobalt, and lead. The RI report was

unable to explain the presence of these metals, nor the Round III data from Lt-202 that showed an increase in other metal concentrations during the April 1989 spring runoff. The DEP continues to believe that this increase is significant and should not be disregarded as nonrepresentative of site conditions at Site 2. Review of the work history at this site shows that considerably less work was performed at Site 2 than at other sites of comparable size. Consequently, sources may exist within the landfill which could account for the Round III results at LT-202.

While additional monitoring of leachate seeps at Site 2 is proposed, the DEP believes that Site 2 has not been fully characterized.

The DEP remains concerned with the number of contaminants of concern (COC's) based on laboratory contamination and sporadic detection. DEP comments regarding COC's in the RI process include the following concerns:

1. A number of contaminants were listed as common laboratory contaminants or as blank contaminants including but not limited to methylene chloride, toluene, 2-butanone, bis(2-ethyhexyl)phathalate, and actetone. Some these contaminants were eliminated from sites when the concentrations in soils were recorded in the ppm range. The DEP believes that this points to a QA/QC problem which should have been eliminated early in the program or should be confirmed in additional sampling.

2. Presence in only one round of sampling is not necessarily a sufficient reason for rejecting a contaminant. It appears that some points were not sampled during all four sampling rounds. To disregard a contaminant based on only one or two sampling rounds is inappropriate in the context of this investigation since trends or irregularities must be supported by sufficient data.

Specific Comments:

Page Section Comment

5-13, table 5-1: Label background values that correspond to the Eastern U.S. ranges.

5-12, sec. 5.3.1: The TCL inorganic aluminum concentration should read 6,887 mg/kg.

6-40, table 6-3: Maximum concentrations of 2-Butanone, Methylene chloride, toluene and Bis (2-ethylhexyl) phthalate appear too excessive in soil to be disregarded as suspect contaminants. Since BTEX compounds characterize the landfill area at Sites 1 and 3 (page 6-54) it is inappropriate to disregard toluene and xylene. Landfills are not homogeneous in nature, therefore changing groundwater conditions could result in sporadic detection.

6-45, sec. 6.5.5: Site 1 and 3 groundwater iron concentration ranged up to 962,000 ug/L at MW-233 in fig. 6-25. A range of 1000-104,000 ug/L for this site was noted on page 6-56. Discussions of the eastern plume give the impression that dechlorinated hydrocarbons are not found.

6-48, fig. 6-27: Cyanide is listed twice at SW-118. The DEP also notes that surface water sampling points were situated considerable distances from leachate seeps. For example, SW-122 is located approximately 275 feet downstream from Lt-201 and approximately 500 feet downstream from Lt-202. Consequently there was little likelihood of detecting any contaminant contribution from these seeps due to dilution.

6-51, sec. 6.5.7 The TCL inorganics listed should include Lead from Lt-301, 302, 303, 305, and 318. Concentrations as high as 1740 ug/l were noted.

6-52, sec. 6.5.7: Identify what is considered to be the ranges for low, medium and high TOC values.

6-54, sec. 6.6: The RA states that inorganics at SW-317 are higher than concentrations immediately down gradient. Identify if this observation is consistent in all sampling rounds. Indicate the sampling location to which SW-317 is being compared.

6-60, fig. 6-32 Review of figure 6-32 shows a discontinuous VOC plume corresponding to VOC values >100 ug/l in the eastern plume. The information presented in figure 6-32 is somewhat ambiguous and doesn't receive sufficient discussion in the text. The DEP suggests that figure 6-32 be better explained.

6-62, sec. 6.7: When discussing the environmental fate of mercury at Site 1 and 3, make reference to pH levels detected in the stream environment.

7-8, sec. 7.5.6: Lead, cyanide, cobalt, and vanadium all appear to be elevated in samples from Lt-201, 202, and 203. However, little consideration was given to these contaminants in the discussion of Site 2.

7-9, sec. 7.6: The unusual results from Round III metals at Lt-202 point to a need to continue monitoring these areas and to give consideration to further investigation of the site to characterize ash areas and contents. The DEP believes that Round III results could be due to the seasonal spring runoff and may be typical of site conditions each spring.

7-11, sec. 7.6: Explain why the search for seeps at Site 2 was related to the presence of slump structures upgradient of Lt-203.

7-12, sec. 7.7 If a no action alternative is proposed at Site 2, a more exact evaluation of mercury associated with Site 2 must be made. "Probably stabilized" seems rather subjective.

10-37, sec. 10.7: The DEP sampled an off base well at Consolidated Auto Salvage. This sampling was designed as an initial screening of the auto salvage yard and its on site residence. Water samples were analyzed for VOC's and selected metals. The sampling was not designed to screen for contaminants detected at Site 8.

11-19, fig. 11-11: Aluminum at Lt-901 was listed at a concentration of 448032000 ppb. Check for a misprint.

14-1, sec. 14.1: The combined refuse volume at Sites 1 and 3 should be 300,000 cubic yards.

14-2, sec. 14.2: List any additional contaminants of concern at Site 2.

14-5, sec. 14.9.3: The burning of chlorinated solvents may have resulted in the production of dioxins at Site 9. The presence of Dibenzofuran at SD-011, to levels of 5100 ug/kg, was noted. No discussion of the burning of solvents or the presence of dibenzofuran has been presented in this document.

15-3, sec. 15.1.1: Although exposure to surface soils and sediments are not thought to be likely, previous exposures have occurred at Site 1.

15-6, sec. 15.1: MEG's are utilized by the DEP to set clean up levels. Clean up levels are based on the MEG standard.

15-7, sec. 15.1.3: The DEP, following the advice of the Maine Department of Human Services, considers the $10^{-5}$ excess cancer rate level to be the highest acceptable risk level.

15-11, sec. 15.1.3.5: Lead exceeds MEG standards. The MEG for lead is <1/2 the MCL and equal to the MCLg proposed by the EPA.

General Comments Risk Assessment (RA):

The DEP reviewed the exposure parameters for sediment and soil, as well as surface water and leachate as applied to current use scenarios, construction workers, and future residential use. The parameters for the current use scenarios appear to be acceptable. Exposure frequencies for future residential use also appear to be acceptable. However, given a consistent set of exposure parameters for future residential use, the DEP questions how PAH target clean up levels for Sites 8 and 9 were determined. It was difficult to determine exactly which sites were evaluated in terms of residential exposure. It would appear that a future residential scenario at Site 8 and 9 would involve the same degree of exposure. Consequently, target clean up levels for Sites 8 and 9 would be expected to be similar. The Department is not in favor of utilizing current use scenarios to set target clean up levels

It appears that potentially important contaminants were inappropriately excluded from consideration as contaminants of concern (COC's). DEP comments regarding COC's as applied to the Risk Assessment reflect the following concerns:

1. Lack of a dose-response standard or guideline is not a valid reason for rejecting a contaminant as a COC.

2. Relatively low toxicity can be an acceptable reason for excluding some contaminants. However, the term "relatively low" needs to be defined. If one compares oral reference doses (RfD's) listed by the EPA, some contaminants said to be of low toxicity in the RA (e.g. Vanadium) should have been assigned a higher level of toxicity.

The Environmental Risk Assessment relied on the Rapid Bioassessment Protocol (RBP) to assist in the evaluation of the aquatic environments in the study area. The DEP has commented and discussed its concerns regarding the RBP with Navy and E.C. Jordan representatives. The DEP recognizes that the RBP was an available tool that was adapted in an attempt to fill the needs of this investigation. However, the DEP wishes to restate its concerns regarding the RBP with the following comments:

1. the RBP is probably most applicable in surveying large numbers of streams to determine possible pollution problems occurring in a state;

2. the RBP doesn't take enhancement (ie. increases in tolerant species such as midges) into account;

3. the RBP sums scores of many matrices and therefore some matrices may balance out other matrices thereby potentially disguising certain problems.

The Department recommends following the methods described in DEP Methods for Biological Sampling and Analysis of Maine's Waters.

Specific Comments-Risk Assessment:

Page Comment

Q-2 Not all "nondetects" should be treated as zeros. Chemicals detected in at least one site for a given medium should be treated as present at 1/2 the detection limit for the compound and medium. If a contaminant is not detected at any given medium, then it can be treated as zero.

Q-12, table Q-3: List mercury as a contaminant of concern.

Q-16, table Q-6: The DEP questions the arguments for not considering Chromium, Nickel, Mercury, and Vanadium as COC's in the groundwater at Site 8 for reasons outlined in the general RA comments.

Q-17, table Q-6: COC's in the leachate at Site 8 should include Vanadium and Nickel. Vanadium is relatively toxic by oral exposure and Nickel levels exceed drinking water guidelines.

Q-19, table Q-7: It is not clear that Lead, Chromium, Nickel, and Vanadium at Site 9 should be excluded from the list of COC's for groundwater or other medium for reasons stated in the RA general comments.

Q-57, table Q-22: Explain why the term "yrs exposed/75" was included in equation #3 (Direct Contact, Leach Seep and/or Surface Water for Noncarcinogens. This term should be eliminated from the equation. Its inclusion in the equation could result in the underestimation of risk factors. Also, the concentration in medium should be ug or mg/L in equation #4.

Q-58, table Q-22: The concentration in medium should be ug or mg/L in equation #4.

Q-59-64, tables Q 23-28: Explain why tables Q-27 & 28, which provide exposure parameters for future use scenarios, utilize the same frequency of contact figures that are listed under current use scenarios in tables Q-23 & 24. The parameters for exposure are further confused with the

addition of Table Q-26 (Soil Exposure Parameters for Future Residents) that lists frequency of contact at 96 days/year as compared to 40-48 days in table 27 and 28.

Q-60, table Q-24: The volume of surface water ingested while swimming is 50 ml/hr. Incidental ingestion while playing will be less; a rate of 20-25 ml/hr (total of 40-50 ml) is considered reasonable. The consumption for a full 2 hour event is too low. The duration of contact to leachate and surface water, as well as years of exposure, were decreased as compared to the Preliminary Risk Assessment.

Q-62, table Q-26: This table provides 5 years of exposure for age group 1-6. All other tables provide 6 years of exposure for this age group.

Q-66, table Q-29: Manganese and 1,1-dichloroethane were selected as COC's in groundwater. Consequently, a comment on the risk of exposure by ingestion of these contaminants should be made. Both have reference doses with which estimated exposure doses can be compared.

Q-85, sec. 3.1.4: Beryllium was eliminated as a COC due to lack of detection in surface waters. However, beryllium was detected in leachate at Sites 1, 2, and 3.

Q-107, sec. 3.3.4: The RA states that the bioavailability of PAH's is minimal due to rapid metabolism and excretion by organisms. On page Q-113, section 3.5.3, PAH's are indicated to have some ability to bioaccumulate.

Q-110, table Q-43: Hazard indices values for maximum concentrations and average concentrations appear to be reversed.

Q-111, sec. Q-3.5.2: Concerns expressed in the RA regarding PAH's, DDT and Cyanide at Site 8 do not seem to be reflected in discussions included in the RI.

Q-121, sec. Q-4.2: The RA concluded that "mercury levels in surface soils at sites 1 and 3 were predicted to bioaccumulate to levels where chronic impacts would be predicted". This appears to be a contradiction to discussions in the RI concerning Sites 1, 2, and 3. For this reason, the DEP believes that confirmation of this prediction regarding the bioaccumulation of mercury and other contaminants in the area ecosystem needs to be considered.

If you have any concerns or questions regarding these comments, please contact me at (207) 289-2651.

Sincerely,

Ted Wolfe

Ted Wolfe
Division of Licensing and Enforcement
Bureau of Oil and Hazardous Materials Control

cc: Meghan Cassidy, US EPA
Mel Dickinson, E.C. Jordon/ABB Environmental
Donald Gerrish, Town of Brunswick
Bruce Hunter, ME DEP
Loukie Lofchie, BACSE
Denise Messier, ME DEP
Commander Ronald Terry, NASB
Susan Weddle, Citizen Representative
Katie Zeeman, ME DHS

A:NASBRI2

RESPONSE TO MEDEP COMMENTS
DRAFT FINAL RI REPORT

General Comments
Site 2

The Navy believes that the disposal area at Site 2 has been adequately characterized through magnetometer and soil gas surveys, soil and groundwater studies, and leachate, sediment, and surface water sampling. The absence of VOCs, SVOCs, and PCBs has been confirmed in all site media. In addition to low levels of DDT at one seep location the only contamination related to past disposal activities at Site 2 is inorganic compounds associated with the leachate seeps. The baseline risk assessments addressing the inorganic compounds do not indicate a significant threat to human or ecological receptors. However the Navy has recommended that environmental sampling continue to ensure that contaminant concentrations do not increase to levels considered to pose a risk.

1. The compounds methylene chloride, toluene, 2-butanone, bis(2-ethylhexyl)phthalate, and acetone were detected at relatively high levels, and based on medium level analysis laboratory method blanks, have been characterized as laboratory contamination. These high levels were found only in soils and were restricted to Round I analysis. Jordan and the Navy recognized that a QA/QC problem had occurred in the Round I laboratory analytical data, and subsequent sampling rounds were analyzed using another laboratory. The high levels of these common laboratory contaminants occurred at most sites and were only found in Round I results. The restriction to Round I results, the base-wide occurrence, and the presence of these compounds in medium level laboratory method blanks strongly supports the contention that the detections do not characterize the sites and are a function of laboratory contamination.

2. The sampling program at NAS Brunswick described in the RI report included four sampling rounds. The first two sampling rounds included all sampling locations (excluding soil borings and test pits etc.). At a TRC meeting following the first two sampling rounds the sampling plan for Round III was formulated. Input from EPA and DEP was used to develop the Round III sampling plan. Sampling points where the data did not clearly define the presence or absence of contamination were included in the Round III sampling plan. Round IV included a number of new sampling points. In interpreting the results from Rounds I through IV Jordan and the Navy have considered both the sampling history of a sampling point, and the distribution of results from sampling points at a given site. This approach has allowed for the integration of new sampling locations into the existing data set. Specific concerns with this approach must be discussed on a sampling point by sampling point basis.

MD049101

Comment Number

5-13, table 5-3: is missing a label in column 1 of the table. As shown in Table 5-4 the range of background values is for the Eastern US.

5-12, sec. 5.3.1: The value for aluminum on page 5-12 should read 6,887 mg/kg.

6-40, table 6-3: Maximum concentrations of 2-butanone, methylene chloride, toluene, and bis(2-ethylhexyl)phthalate are high in some soil analysis, but are believed to be a function of laboratory contamination. All of the high values are associated with Round I data. There were significant QA/QC problems associated with Round I data (see discussion on general comments). Medium level laboratory method blanks associated with Round I had high levels of these compounds, all of the compounds are common laboratory contaminants, and the high levels were reported in Round I data at most NAS Brunswick sites. The lack of detection of these compounds in subsequent soil analytical data and the association of these compounds as common laboratory contaminants supports the contention that they do not characterize the site.

Low levels of toluene (7-15 mg/kg) and xylene (33-36 mg/kg) are reported in soil data from Sites 1 and 3 (Round IV). The toluene results are consistent with laboratory contamination as up to 190 mg/kg toluene is reported in Round IV laboratory method blanks. The low levels of xylene may characterize Site 1 and 3 soils, but do not change the public health risk characterization.

6-45, sec. 6.5.5: The range of iron concentration indicated for groundwater at Sites 1 and 3 is appropriate. The value for MW-233 of 962,000 mg/L is not believed to characterize groundwater as the sample was not filtered. The groundwater in MW-233 was not filtered due to the presence of excess silt and clay material (see page 6-46) which is believed to influence the iron concentration.

VHOs in the Eastern Plume are characterized by the presence of TCE, PCE, and TCA. Partially dechlorinated VHOs (DCE and DCA) are present in the Eastern Plume (consistent with minor dechlorination reactions), but typically at concentrations less than TCE and TCA. TCE, TCA, and PCE are not observed in groundwater at the landfill area.

6-48, fig. 6-27: Cyanide should only be listed once, and the concentration range is ND-15.6 mg/L.

All of the leachate seep locations do not have surface water sampling points located directly downstream, but several leachate seeps do have adjacent, downgradient surface water sampling points (e.g., SW-319/LT-306 and LT-307; SW-002/LT-302 and LT-301). Where this relationship exists the large number of inorganic analytes observed in the leachate do not characterize the adjacent surface water. Elevated levels of calcium, iron, manganese, and sodium are observed in the adjacent surface waters, similar to that shown in Figure 6-30. Due to the small volumetric contribution of leachate the elevated inorganics observed in the surface water are believed to be related to shallow groundwater discharge from the landfill area.

MD049101

6-51, sec. 6.5.7: Lead was observed in leachate at seep locations LT-301, LT-302, LT-303, LT-304, LT-305, and LT-307. The reported concentrations ranged from 10-1,740 mg/L and are shown in Figure 6-27.

6-52, sec. 6.5.7: TOC analysis was performed on sediment samples from the seven leachate seeps at Sites 1 and 3. TOC values ranged from a low of 1,900 mg/kg at LT-306 to a high of 30,000 at LT-304. The low TOC value at LT-306 is consistent with the lower values observed in sediment at surface water sampling locations along Mere Brook. Moderate values of TOC would be in the 5,000 to 10,000 mg/kg range, and high TOC concentrations are those in excess of 10,000 mg/kg. The concentration of TOC in stream sediments is also a function of the local stream environment. High energy areas of the stream receive little deposition and typically have lower TOC values, while low energy areas receive deposition and may have higher TOC values.

6-54, sec. 6.6: Many of the sampling locations downgradient of SW-317 were not established until Round IV (i.e., SW-120 through SW-124). The comparison of sampling points directly downgradient of SW-317 can only be made for the Round IV data. The sampling locations in Mere Brook immediately downgradient of SW-317 include SW-120 and SW-121, and both of these sampling points have concentrations of inorganics lower than SW-317. Surface water sampling points SW-115 and SW-004 were sampled during Rounds I and II and are downgradient of SW-317 (see Figure 6-27). Inorganic concentrations at these two sampling locations are very similar to those at SW-317. The important aspect of the inorganic distribution in surface water downgradient of SW-317 is the significantly elevated inorganic values observed at SW-122.

6-60, fig. 6-32: The data shown in Figure 6-32 characterize the distribution of total VHOs in excess of 100 mg/L. The number of sampling points in the Eastern Plume were significantly enhanced during the Post-Screening Field Program. A detailed discussion of the distribution of VHO contamination is presented in the Supplemental RI report (see Section 8.0).

6-62, sec. 6.7: The pH levels of the surface water and leachate water in the Site 1 and 3 area typically ranges from 5.3 to 7.0. This range in pH is consistent with the stabilization of elemental mercury.

7-8, sec. 7.5.6: Cobalt and vanadium were discussed in the text and all inorganics are shown in Figure 6-27. Lead was detected at LT-201(35-337 mg/L), LT-202 ( 82-942 mg/L), and LT-203 (171 mg/L). Cyanide was reported at LT-201 (15-392 mg/L) and LT-202 (ND-384 mg/L). The presence of these contaminants is consistent with the overall elevated inorganic distribution at the Site 2 leachate seeps.

7-9, sec. 7.6: The concentration of metals from Round III leachate at LT-202 is significantly higher than observed during previous rounds. Increased inorganic concentration in leachate was not observed at any of the other Site 1, 2, or 3 seep locations. Similarly the Round III specific conductance at LT-202 was 302 umhos/cm, a value within the range of values at the other seeps during Round III (208-449 umhos/cm). The Round III specific conductance at LT-202 is also within the range observed during Rounds I, II, and IV at the seep location. Other field parameters at LT-202 including pH and temperature

MD049101

also had values intermediate to the other Site 1, 2, and 3 seeps. These observations do not support the significantly higher concentration reported in Round III leachate and suggest that the elevated inorganic concentrations are a function of entrained solids (soils or precipitate).

7-11, sec. 7.6: The search for seeps at Site 2 was not related to the presence of slump structures. The slump structures northwest of Site 2 are believed to be the reason for the occurrence of seeps northwest of Site 2 (i.e., LT-203).

7-12, sec. 7.7: In the Draft Final Phase 1 Feasibility Study a monitoring program was proposed for Site 2 in conjunction with monitoring at Sites 1 and 3.

10-37, sec. 10.7: The relationship between Site 8 and the Jordan Avenue Wellfield has been evaluated by sampling the three observation wells (OW-812, OW-813, and OW-814) and long term water level monitoring. The results indicate that there is no hydrologic connection between the wellfield and Site 8 (see Supplemental RI report).

11-19, fig. 11-11: The concentration of aluminum at LT-901 is 32,000 mg/L.

14-1, sec. 14.1: The combined refuse volume at Sites 1 and 3 is 300,000 cubic yards.

14-2, sec. 14.2: In addition to mercury, other contaminants were evaluated in the risk assessment including arsenic, cadmium, chromium, lead, nickel, DDT, DDD, and DDE. Exposure to these contaminants did not present an ecological risk.

14-5, sec. 14.9.3: Dibenzofuran is a polynuclear aromatic hydrocarbon (PAH). PAHs are widely distributed in the sediments in the Site 9 tributaries, and the presence of dibenzofuran is consistent with this distribution. The formation of chlorinated dibenzofurans (i.e., dioxins) via burning chlorinated solvents is chemically and thermodynamically unrealistic. The dibenzofuran is a large organic molecule and chlorinated solvents (TCE, PCE etc.) are small molecules. High temperature processes like burning will typically form smaller molecules, not larger molecules. For example dioxins can from burning plastics (large polymer structures), but would not be expected to form from burning TCE, TCA, or PCE. Although a solvent burning ground was postulated in the IAS document, the presence of such an area has not been identified. The source of solvent contamination in the groundwater is currently believed to be related to an abandoned septic system (see Supplemental RI report, Section 7.0).

15-3, sec. 15.1.1: Direct contact exposure, although considered unlikely, is evaluated as part of the worker exposure scenario.

15-6, sec. 15.1: MEGs are non-enforceable health-based guidelines and may be used by the DEP to establish clean-up levels. However, MEGs are not ARARs. As stated in 40 CFR 300.400 (g)(4) "Only those state standards that are promulgated, are identified by the state in a timely manager, and are more

MD049101

stringent than federal requirements may be applicable or relevant and appropriate".

15-7, sec 15.1.3: The risk range specified in the revised NCP is used in the Feasibility Study to develop and evaluate remedial alternatives. The point of departure for this evaluation is set at $10^{-6}$. E.C. Jordan recognizes that DEP considers $10^{-5}$ the highest acceptable risk level.

15-11, sec. 15.1.3.5: Since the concentrations of lead exceed the MCL, they would also exceed the MEG and/or MCLG.

General Response to Comments

PAH Target Cleanup Levels - The target cleanup levels for PAHs at Site 8 and 9 were both developed based on future residential scenarios (i.e., long-term repetitive exposure to surface soils). However, the target population for each site (i.e., young children, older children) was different and identified based on likely access to and land-use at each site. Because young children have access to Site 9 (picnic area) it was appropriate to set the cleanup levels to be protective of this age group. At Site 8, older children are the target population, and the cleanup levels were based on protecting this subpopulation. It is extremely unlikely that young children (0-6 years) would have long-term repetitive exposure to surface soils at Site 8. The specific exposure parameters used to develop cleanup levels at both Site 8 and Site 9 are presented in their respective Feasibility Study reports and should clarify this issues.

Selection of Contaminants of Concern - The methodology used to select Contaminants of Concern was consistent with the guidance stated in the RAGs Volume I. The specific methodology used at NAS Brunswick is described on pages Q-3 through Q-7. Jordan believes that an appropriate subset of contaminants were quantitatively evaluated and does not agree that "potentially important contaminants were inappropriately excluded from consideration".

Rapid Bioassessment Protocol - As discussed on the RI Report the RBP was used in a retrospective manner to support the conclusions of the Environmental Risk Assessment. The fact that the conclusions of the RBP and the more standard assessment approaches agreed so closely suggest that some of the limitations of the methodology may not have been realized in this study.

Specific Comments - Risk Assessment - DEP

Q-2: As described on page Q-2, non-detects were treated as zeros to make the data sets comparable. Different data sets had different detection limits because of the various laboratories used and time period over which the samples were collected.

Q-12: Mercury should be listed as a contaminant of concern for Site 2.

Q-16: Mercury and nickel were excluded as contaminants of concern because they were detected at levels less than their respective MCLs (0.002 and 0.1

MD049101

mg/l). Chromium and vanadium were only detected in upgradient monitoring wells (MW-804 and MW-801) and not considered to be site related.

Q-17: Leachate is not considered to be a potable resource and therefore direct comparisons to drinking water standards are not valid. Direct contact and incidental ingestion exposures are more appropriate to evaluate. Inorganic contaminants are not readily absorbed through the skin and as such do not exhibit the same degree of toxicity as could be expected from an oral route of exposure.

Q-19: Lead, chromium, nickel and vanadium were only detected in MW-905 during Round IV sampling. This sample was not filtered and therefore is not considered to characterize contamination at this location.

Q-57: This was a typographical error that has no effect on the risk estimates.

Q-58: This was a typographical error that had no effect on the risk estimates.

Q-59: Through 64 Table Q-23-28: The land-use at these sites is not expected to change over the foreseeable future (Master Plan for NAS Brunswick). Therefore, the frequency of contact is assumed to be similar for both baseline and future exposure scenarios. The frequency of contact is based on recreational land-use. The exposure parameters in Table Q-26 were assumed as conserved estimates of potential future exposure. Risk estimates based on these exposure conditions are presented in Tables Q-132 through Q-157.

Q-60: The exposure parameters assumed for all scenarios were re-evaluated based on the meeting with EPA and DEP held in Portland, Maine in June 1990. The rationale for selecting or reference for each exposure parameter is provided in the Table.

Q-62, Table Q-26: This is a typographical error and should read 6 years.

Q-66, Table Q-29: The chronic reference dose for manganese is 0.1 mg/kg-day and for 1,1-dichloroethane (1,1-DCA) is 0.1 mg/kg-day. Assuming a 70 kg adult consumes 2 liters of water per day, the "acceptable" concentration of these contaminants in drinking water is 3.5 mg/l

$$\frac{3.5\ \text{mg}}{1} \times \frac{2\ \text{liters}}{\text{day}} \times \frac{1}{70\ \text{kg}} = 0.1\ \text{mg/kg-day (RfD)}$$

Since manganese was detected at concentrations greater than 3.5 mg/L it may present a human health risk and therefore was included as a contaminant of concern. Response objectives for manganese were developed in the Feasibility Study. 1,1-DCA was not detected at concentrations greater than 3.5 mg/l and therefore is not considered to present a human health risk.

Q-85 sec 3.1.4: Beryllium was detected in leachate from Site 1 and 3 at concentrations ranging from 7 to 56 ug/l. Because leachate is not considered a potable resource the drinking water standards are not appropriate measures

MD049101

for comparison. In addition, leachate is not considered an aquatic habitat and AWQC or other surface water toxicity values are also not appropriate measures for comparisons. The presence of beryllium in the leachate is being addressed in the feasibility study once the response objectives for this site includes reducing the amount of contaminated groundwater and leachate being generated.

Q-107, sec 3.3.4: The current understanding is that PAHs probably do not bioaccumulate in terrestrial animals because metabolism and excretory processes proceed fairly rapidly. However, very fe studies have been conducted, and one would a priori suppose that these compounds could bioaccumulate based on the large $K_{ow}$S.

Q-110, Table Q-43: The Hazard Indices (HI) are reversed in this Table. The higher HI is associated with exposure to the maximum concentration.

Q-111, sec. Q-3.5.2: PAH, DDT and cyanide contamination was discussed in the RI. This discussion focuses on contaminant concentrations and potential source areas. It is not appropriate to discuss potential risks associated with these compounds in the RI.

Q-121, sec. Q-4.2: Field sampling of biota has not been proposed for Sites 1, 2, and/or 3, and is not considered necessary. Mercury has been identified as a contaminant of concern at these sites, based on its potential to bioaccumulate within a food chain. The target cleanup level factors in the bioaccumulation potential for this compound and is based on scientific information presented in peer-reviewed literature. The cleanup level for mercury will be protective for upper trophic level organisms that may ingest a high proportion of mercury as part of their diet.

# APPENDIX Q

## RESPONSE TO USEPA, MEDEP AND TRC COMMENTS: DRAFT SUPPLEMENTAL RI REPORT

UNITED STATES ENVIRONMENTAL PROTECTION AGENCY
REGION I
J.F. KENNEDY FEDERAL BUILDING, BOSTON, MASSACHUSETTS 02203-2211

May 30, 1991

Mr. James Shafer (Code 1421)
Northern Division
Naval Facilities Engineering Command
U.S. Naval Base, Bldg. 77 Low
Philadelphia, PA 19112-5094

Subj: U.S. EPA Comments
Draft Supplemental Remedial Investigation Report
Naval Air Station Brunswick
Brunswick, Maine

Dear Mr. Shafer:

The United States Environmental Protection Agency (EPA) has received and partially reviewed the document entitled "Draft Supplemental Remedial Investigation Report (RI)" dated April 1991, for the Naval Air Station Brunswick in Brunswick, Maine. Attachment I contains the majority of EPA's comments on the Supplemental RI Report.

The comments attached do not represent EPA's final review of this document. EPA is continuing to review the hydrogeologic portions of the report, particularly the hydrogeology of Site 11 and the Eastern Plume. In light of this continuing review and pursuant to Section 6.7(b) of the Federal Facilities Agreement (FFA) the EPA is extending the comment period by 20 days.

Also attached to this letter is a letter containing comments from the National Oceanic and Atmospheric Administration (NOAA). The Navy should include their responses to NOAA's comments in their resubmittal to the EPA.

EPA requests that the Navy submit a comment by comment response, as well as incorporate the necessary changes into the Draft Supplemental Remedial Investigation Report. As outlined in Section 6.7(e) of the FFA the Draft Final Supplemental RI will be due within 45 of the close of the comment period. The comment period will end not later than June 19, 1991.



PRINTED ON RECYCLED PAPER

If you have any questions regarding the enclosed comments or would like to discuss the comments further, please contact me at (617)573-5785.

Sincerely,

Meghan F. Cassidy

Meghan F. Cassidy
Remedial Project Manager

Enclosures

cc: Eileen Curry/NASB
Mel Dickenson/E.C. Jordan
Ted Wolfe/ME DEP
Ann Johnson/SAIC
Mary Jane O'Donnell/US EPA
Richard Willey/US EPA
Jui-yu Hsieh/US EPA
Bob DiBiccaro/US EPA
Ken Finkelstein/NOAA

## ATTACHMENT I

The comments provided below are specific comments which pertain to the report entitled "Draft Supplemental Remedial Investigation" (April 1991). This report was submitted by the U.S. Department of the Navy for the Naval Air Station Brunswick in Brunswick, Maine. The report was prepared for the Navy by E.C. Jordan.

### EXECUTIVE SUMMARY

1. Page ES-10, Paragraph 2: Provide a discussion regarding the solvent burning area which was discussed as a possible source area in previous reports. Specifically, why is the solvent burning area no longer considered a possible source and what was the historical information which led to including this previously.

### 1.0 INTRODUCTION

2. Page 1-8, Paragraph 1: Why is there no mention of Site 14 in this description of sites under investigation at NASB? Include Site 14 in this paragraph.

### 2.0 APPLICABLE OR RELEVANT AND APPROPRIATE REQUIREMENTS

3. Page 2-4, Paragraph 2: This paragraph states that Table 2-2 compares groundwater contaminants identified at NAS Brunswick with the corresponding federal and state regulatory limits. The table however does not show any state regulatory limits, but lists Maine Maximum Exposure Guidelines (MEGs) in the footnotes. Include state requirements in this table.

4. Page 2-6, Table 2-1: The State Guidance section from Table 3-1 (page 3-4) of the Draft Final RI Report (relating to Maine Rules Relating to Testing of Private Water Systems) was not included in Table 2-1. It should be added with a status of To Be Considered.

5. Page 2-7, Table 2-1: The Asbestos NESHAP should be added in the "Consideration in the RI/FS" column. If removal of th asbestos from Sites 5 and 6 is one of the remedies considered during the Feasibility Study, the Asbestos NESHAP will be relevant and appropriate.

6. Page 2-8, Table 2-2: This table needs to be revised as follows.

   - Lead has a final MCLG of 0 ppb and an action level of 15 ppb.

- The chronic AWQC , 0.012 ug/l, is not a hardness dependent criterion.

- Sodium has a 20,000 ppb Drinking Water Equivalent Level (DWEL) which is recommended for people with hypertension.

- The 20,000 ug/l value presented for 1,1-Dichloroethane is a Lowest Observed Effect Level (LOEL).

- Methylene chloride (dichloromethane) has a proposed MCL of 5 ppb.

- Naphthalene has a DWEL of 100 ppb.

- The value presented for Trichloroethylene, 21,900 ug/l is a LOEL.

- The value presented for Tetrachloroethylene, 840 ug/l, is a LOEL.

- There are no MEGs listed in the table, but a footnote regarding MEGs is presented.

7. Page 2-11, Table 2-4: The checklist in Table 2-3 does not list floodplain as a site feature (except "downstream"), but floodplain ARARs are listed in Table 2-4. Clarify which, if any, parts of the site are in floodplains.

8. Page 2-15, Table 2-4: Town Ordinances and State Guidelines were in the Draft Final RI (Table 3-3), but are not included in Table 2-1. Why were these not included as To Be Considered?

9. Table 2-5: The following comments pertain to this table.

   - EPA will continue to review which RCRA requirements will or may be ARARs. Additional comments will be made as necessary in future deliverables.

   - Any off-site discharge to surface water must meet <u>both</u> administrative and substantive NPDES requirements. This should be stated in the "Consideration in the RI/FS" column.

   - It is not clear that Maine DEP, Bureau of Water Quality Control is an ARAR, i.e. whether it meets the requirements of Section 300.400(g)(5) of the National Contingency Plan (NCP). If it does, a citation as to where it is promulgated must be given.

## 3.0 FIELD PROGRAM DESCRIPTIONS AND RATIONALE

10. Page 3-2, Paragraph 2: Include a statement regarding the results of PI meter readings.

11. Page 3-12, Paragraph 1: Provide further discussion regarding the basis for selecting the depth of bedrock wells. Specific-ally, describe how a depth consistent with the anticipated plume elevation was chosen.

12. Page 3-20, Paragraph 3: This paragraph states that "surface soil samples were obtained from zero to 24 inches in depth and the sample locations were based, in part, on the geophysical survey...". Include a description indicating what other criteria were to determine sample locations.

13. Page 3-24, Paragraph 1: As indicated here, the residential well samples were analyzed for TCL VOCs. Clarify whether these wells were sampled for all TCL VOCs or only selected VOCs which are associated with the eastern plume as indicated in previous work plans.

14. Page 3-26, Paragraph 2: Include the basis for performing three tests at wells MW-302, MW-305 and MW-319.

    Include a discussions indicating why data from both tests at MW-303 and tests from several other wells were rejected.

15. Page 3-28, Paragraph 2: Provide the basis for determining whether measurements of stream widths and depths would be taken at 0.5 or 1 foot intervals.

## 4.0 ORION STREET ASBESTOS DISPOSAL SITE - SITE 5

16. Page 4-1, Paragraph 2: Include a discussion in the narrative providing details of when the soil cover and signs were installed at Site 5.

17. Page 4-2, Figure 4-1: Provide the rationale for showing the extent of Site 5 as it is shown in this figure.

18. Page 4-3, Paragraph 3: The narrative should include a discus-sion regarding magnetometer and GPR response to asbestos material specifically. This paragraph states that the magnetometer is a good tool due to its sensitivity to "even small quantities of ferrous debris". Indicate what historical information is available to indicate that ferrous material was buried in this area.

19. Page 4-5, Paragraph 1: Provide the rationale for selection of the surface soil sampl locations.

    State the purpose of sampling from 0 to 2 feet since a minimum 1 foot cover is reported as having been placed over the asbestos.

20. Page 4-5, Paragraph 2: Discuss the basis for assuming that groundwater seepage rates at Site 5 are expected to be similar to those observed at Site 3.

21. Page 4-6, Paragraph 2: Include a discussion regarding how the area of Anomaly B correlates to the reported area of the trenches.

22. Page 4-7, Paragraph 2: The statement "Environmental contamination was not detected at Site 5" must be changed. Since surface soil was the only matrix for which samples were collected and analyzed, the only conclusion regarding the presence or absence of contamination which can be made is for this matrix.

## 5.0 SANDY ROAD RUBBLE AND ASBESTOS DISPOSAL SITE - SITE 6

23. Page 5-1, Paragraph 1: Indicate where at the site asbestos pipe was reported at ground surface and whether the pipe was removed or covered.

24. Page 5-1, Paragraph 1: EPA notes that during a tour of the site on April 11, 1991 it appeared that material is being removed from the large soil stockpile. The Navy should ensure that this practice is stopped until a decision regarding the site is made.

25. Page 5-5: Provide justification for the assumption of 25% effective porosity.

26. Page 5-8, Paragraph 2: This paragraph should state what surface soil samples were analyzed for.

## 6.0 PERIMETER ROAD DISPOSAL SITE - SITE 8

27. General: The Draft Final RI Report, p. ES-6, states that groundwater contaminants at Site 8 included PAHs, arsenic, cyanide, cadmium, chromium, lead, mercury, and sodium. However, the Supplemental RI discusses only the occurrence of lead at Site 8. Summarize or refer to the results of the previous analyses discussed in the RI.

28. General: The Post-Screening Work Plan requires that further samples of soil and sediment be coll cted at Site 8 (p. 4-41). Present the results of this sampling effort or provide rationale for not addressing this issue in the Supplemental RI.

29. Page 6-2, Figure 6-1: The text suggests that Figure 6-1 should depict well MW-811 rather than MW-810.

30. Page 6-3: In the discussion of hydraulic conductivities, refer to the discussion (in Section 3.12.1, Hydraulic Conductivity Testing) of how hydraulic conductivity values were determined. Provide justification for the assumption of 25% effective porosity.

31. Page 6-3, Section 6.2: In the discussion of the hydraulic connection between the Jordan Avenue Municipal Wellfield (JAMW), specify if any precipitation events occurred during the time vs. drawdown test and discuss the magnitude and duration of any such events. Also, discuss the potential effects of precipitation/recharge on the time vs. drawdown graph. Provide an estimate of the magnitude of barometric effects on the drawdown curve.

32. Page 6-3, Section 6.2: Indicate the aquifer in which the Jordan Avenue wells are screened and incorporate this information into the discussion regarding hydraulic connection between Site 8 and the JAMW.

33. Tables 6-1, 6-2 and 6-3: The structure and content of Tables 6-1, 6-2, and 6-3 is confusing. Address the following concerns:

    - On each table, provide a more complete description of the information presented in the table (the table titles are ambiguous).
    - Indicate the reason for presenting the comparison of Site 9 groundwater data in Table 6-1.
    - In Table 6-1, present all available analytical results (e.g., the text states that the potassium result for MW-811 during Round 4 was <5000 ug/L, but Table 6-1 does not include this result).
    - The text discusses hexavalent chromium data, but chromium results are not included in Table 6-1.
    - Provide units (ug/L) and sampling dates (or Rounds) on all tables.

34. Page 6-4, Figure 6-2: Provide an xample and a description of the shading used to indicate the xtent of Site 8, e.g. "shaded area represents the lateral extent of the site based on information derived from t st pits, geophysical methods, and/or historical records of disposal".

35. Page 6-5, Paragraph 2: Indicate whether barometric and recharge influences were measured during the test. If no recharge measurements were recorded at the site, was an effort made to obtain rainfall measurements from a nearby weather station and correlate these values with aquifer fluctuations?

36. Page 6-10, Paragraph 2: Include chromium results discussed here in Table 6-2.

37. Page 6-10, Paragraph 2: Provide further discussion regarding the history of sampling at MW-811. Specifically, how list each time the well was sampled and summarize the results.

38. Page 6-12, Paragraph 1: Include a discussion regarding the location of the observation wells related to Site 8 (i.e., crossgradient, etc.)

39. Page 6-12, Paragraph 2: Specify which wells are screened in silt/clay and what the level of inorganics is in each of these wells.

40. Page 6-12: Reference is made to the drinking water standards and background levels. Provide a table of the applicable drinking water standards and background levels for each contaminant detected in Site 8 wells.

41. Page 6-12: The elevated levels of inorganics in the observation wells are believed to be a function of the geologic strata. Provide additional information to support this statement.

42. Page 6-12: The report states that MW-808 produced clear water in the first three sampling rounds but produced silty water in Round IV. Statements regarding silty samples should be supported by turbidity measurements. Provide field logs that indicate that the wells were properly purged prior to sampling. In addition, increased turbidity may indicate that the well screen has failed or that the well needs to be re-developed. Provide a discussion regarding whether this issue was considered and what steps if any were carried out to evaluate the integrity of the well.

43. Page 6-14: Carbon tetrachloride detected in MW-813 cannot be discounted as originating from the site merely because it was detected in only one well. If the contaminant is a laboratory error or if it originated from another source, provide data to support these conclusions.

44. Page 6-14, Paragraph 1: Discuss whether wells screened in silt and clay across the base exhibit elevated inorganic concentrations in groundwater or if this is related to Site 8 only.

45. Page 6-14, Paragraph 3: Explain the basis for the stating that wells OW-812 and OW-814 are potentially downgradient of Site 8.

46. Page 6-15: The statement that dissolved inorganics will remain in solution until solubility is reached is not an accurate statement. Partitioning of inorganics to the solid phase can occur at concentrations below solubility concentrations. Modify this discussion accordingly.

## 7.0 NEPTUNE ROAD DISPOSAL SITE - SITE 9

47. General: EPA has previously commented (October 17, 1990 comments to NASB) that "in instances where the source area is located under an existing structure ... the Record of Decision (ROD) must call for further investigation and remedial action if warranted (through a new or amended ROD) if the buildings are ever removed." Since no intrusive explorations into the landfill and former incinerator area have been conducted to date, NASB should consider this comment during development of the ROD for Site 9.

48. Page 7-4, Paragraph 2: Indicate in the text that the hydrogeology was assessed based on seven existing monitoring wells.

49. Page 7-7: Discuss how the seepage velocities were determined (include assumptions).

50. Page 7-8, Paragraph 2: Indicate in the text why only one groundwater sample was collected from CP-153.

51. Page 7-8, Paragraph 2: Discuss the rationale for selecting the target VOCs. Why was vinyl chloride not included as a target VOC.

52. Page 7-9, Paragraph 1: Provide the rationale for collecting water samples at 18 feet below ground surface.

53. Page 7-12, Paragraph 1: This paragraph states that field GC screening of samples did not detect VOCs. Were any of the field screening results confirmed in the laboratory?

54. Page 7-12, Paragraph 2: This paragraph states that field GC results did not indicate the presence of contaminants in TP-904. Prior to this statement, in the same paragraph, is a description of contamination found in TP-904. Clarify this discrepancy.

55. Page 7-14, Paragraph 2: Where were samples taken which were analyzed for VOCs? Were these samples taken from surface soils, shallow soils, etc.?

56. Page 7-14, Paragraph 2: PAH concentrations in the ppm range (TP-904 and TP-911) should not be considered "low levels."

57. Page 7-15, Paragraph 1: The statement is made that PAHs in shallow soil samples are attributable to basewide distributions or the presence of a barbecue pit. Provide further justification for this statement and discuss whether the concentrations and spatial distribution of the PAHs are consistent with the location and operation the barbecue pit.

58. Page 7-15, Paragraph 1: If PAHs in soil at Site 9 are attributable to "basewide distributions", indicate how the contamination will be addressed, if not under the Superfund program.

59. Page 7-15, Paragraph 1: Provide further discussion regarding historic usage of DDT at Site 9. Does documentation exist regarding its use, what was the time frame of usage, etc.?

60. Page 7-16: State whether the line indicating "distribution of contamination" on Figure 7-6 is an isoconcentration line. If the line is an isoconcentration line, state what constituent(s) and concentration the line represents.

61. Page 7-17: Maps recently found by the Navy identify an old leachfield at Site 9. The location of this leachfield is shown in Figure 7-6. Provide more detail on the leachfield including its design, dimensions, and history of operation.

62. Page 7-17: The statement is made that "at some time during use of the leachfield system, chlorinated solvents were apparently poured down the drain." Provide further justification for this assumption. Describe the use of Building 201 during the period 1952 to 1972 (Was this the "Metal Shop" discussed on page 11-1 of the Draft Final RI Report, August 1990?).

63. Page 7-17: Previous reports submitted by the Navy identified a solvent burning area adjacent to Building 201 as a possible source of VOC contamination. With the discovery of the old leachfield all discussions of the solvent burning area have ceased. Discuss the historical information which indicated that a solvent burning area was located near Building 201 and provide justification for not continuing to include it as a possible source of contamination.

64. Page 7-18, Paragraph 1: Clarify, in the text, what is meant by "low levels of VHOs in groundwater" since vinyl chloride has been detected above its MCL.

65. Page 7-18, Paragraph 1: Discuss biodegradation of PAHs further. What are the expected intermediate and end-products of this biodegradation?

66. Page 7-18, Paragraph 2: The fifth sentence of this paragraph refers to Site 11 soils. Is this correct?

67. Page 7-19, Paragraph 2: Discuss why groundwater samples were taken along the southern side of the southern tributary. What information is available indicating that this is the area of discharge?

68. Page 7-19, Paragraph 2: Indicate where air blanks were taken, how frequently, etc.

69. Page 7-20: As stated previously, the statement that dissolved inorganics will remain in solution until solubility is reached is not an accurate statement. Partitioning of inorganics to the solid phase can occur at concentrations below solubility concentrations. Modify this discussion accordingly.

## 8.0 FIRE TRAINING AREA AND EASTERN PLUME - SITE 11

70. All Figures: Provide an example and a description of the shading that represents the lateral extent of each site, i.e., "shaded area represents the lateral extent of each site based on information derived from test pits, geophysical methods, and historical records of disposal".

71. Figure 8-13: Explain why groundwater contours for the deep sandy soils were not provided for the northern half of the site. Provide water level elevations for MW-319, P-104, P-105, P-106, P-107, and all other wells and/or piezometers installed in the deep sands, or provide a rationale for not including these wells on the groundwater contour map of the deep sandy zone.

72. Figures 8-23, 8-30 and 8-31: In the legend, provide an example and a description of the boundary of the eastern plume. Specify what the plume outline delineat s, .g., the contaminants detected and the concentration that defines the depicted plume.

73. Page 8-2, Paragraph 1: Change 19<u>40</u> Field Program to 19<u>90</u> Field Program.

74. Page 8-2, Paragraph 1: This paragraph states that "information concerning linkage of the contamination observed at these sites to the downgradient area is needed." Does this state-ment mean that further work is necessary?

75. Page 8-2, Paragraph 2: Clarify whether all of the activities presented were carried out during the Post-Screening field effort or if this work represents all work performed in the Site 11/Eastern Plume area to date.

76. Page 8-5, Paragraph 2: Refer to Appendix J for the results of the permeability tests.

77. Page 8-5, Paragraph 2: Refer to the discussion of contaminant fate and transport in groundwater in Section 8.6.

78. Page 8-5, Paragraph 3: Provide the rationale for selecting the three soil samples from each test pit.

79. Page 8-5, Paragraph 4: Refer to the discussion of the results of the on-site GC analyses performed at the upwelling spring (SW-125).

80. Page 8-7, Paragraph 2: The statement that the sand-rich zones within the transition generally exhibit a confining characteristic to groundwater implies that the sand is a confining unit. The statement should say "... groundwater in the sand-rich zones appears to exist under confined conditions". Provide justification for this statement, i.e., the hydraulic gradient or the potentiometric surface for these zones suggests confined or artesian conditions. Also, provide a reference to section 8.3 that more specifically describes the transition zone, i.e., 8.3.2.

81. Page 8-8, Paragraph 1: Indicate whether the clay encountered in this area is the same clay found beneath other portions of the base. Is this clay part of the Presumpscot Formation?

82. Page 8-8, Paragraph 3: Indicate in the text that Figure 8-1 shows the locations of the cross-sections.

83. Page 8-10, Figure 8-4: This figur indicates that in several borings to the west of the section, explorations encountered sand and then the transition zone sand. Describe how these two sand units are distinguishable.

84. Page 8-14, Paragraph 2: The statement "In the eastern portion, the upper sands are ultimately confined by the transition" needs clarification. Clarify how these upper sands are confined by the transition zone which is underneath it as depicted in Figure 8-4.

85. Page 8-15, Paragraph 2: The geologic cross sections indicate that no clay was encountered in MW-308, CP-129 and MW-305, however this paragraph states that only CP-136, CP-CP-145 did not contain any clay. Clarify this discrepancy.

86. Page 8-16, Paragraph 2: The last sentence of this paragraph states that although CP-129 was reported as remaining completely within the transition zone (and is shown this way on the cross sections), the logs indicate that two clay layers were actually encountered. If clay was encountered during drilling show this on the cross section. If the clay cannot be included on the cross section, delete this statement from the text.

87. Page 8-17, Paragraph 1: This paragraph states that contaminants are riding along the top of the clay surface. If this is the case, why are there so few wells screened just above the clay layer?

88. Page 8-18, Paragraph 2: Clarify whether surface drainage from Site 7 flows into Mere Brook or Merriconeag Stream.

89. Page 8-22, Paragraph 3: Provide justification as to why stations MB1 and MS4 were used to calculate the discharge rate.

90. Page 8-23, Paragraph 3: Refer to Section 3.12, Permeability Testing.

91. Page 8-23, Paragraph 3: Note that Table 8-1 and 8-3 appear to be the same.

92. Page 8-29, Paragraph 2: The third sentence of this paragraph refers to the "deep, coarse-grained soils". Is this part of the transition zone? Clarify in the text.

93. Page 8-29, Paragraph 3: Does all of the groundwater flowing within the confined sandy soils discharge to the Harpswell Cove watershed area?

94. Page 8-29, Paragraph 3: Indicate whether Harpswell Cove in the area where discharge will occur is tidally influenced, contains brackish water, tc.

95. Page 8-29, Paragraph 3: Show the location of the Harpswell Cove watershed area on a map.

96. Page 8-30, Paragraph 1: Define the "upper" and "lower" portions of the bedrock.

97. Page 8-30, Paragraph 1: Indicate which wells were installed in the upper portion of the bedrock and which were installed in the deeper portion.

98. Page 8-30, Paragraph 2: Indicate in the text why results of packer tests conducted at 20 psi are interpreted to be the most representative of natural pressures and flow conditions.

99. Page 8-32, Paragraph 2: Provide justification for the thickness value (b) given for the bedrock zone 93 to 97 f et bgs and for the zone 15 to 119 feet bgs.

100. Page 8-40, Paragraph 2: Justify the assumption of a vertical-to-horizontal anisotropy of 10:1 within overburden soils and justify the vertical groundwater migration rate of 0.14 feet per day. Specify that this flow is downward.

101. Page 8-41, Paragraph 2: Refer to Section 3.12, Permeability Testing in the discussion of hydraulic conductivities.

102. Page 8-41, Paragraph 3: Justify the assumption of 25% effective porosity for the sandy transitional soils.

103. Page 8-41, Paragraph 3: Provide the equations and the parameter values, (and justification of parameter values, where appropriate) that were used to determine the groundwater seepage velocities in the vicinity of Site 11, within the confined sand strata, and within the Eastern Plume area.

104. Page 8-43, Paragraph 2: Discuss why some portion of groundwater is not expected to flow beneath the tidal area.

105. Page 8-44, Paragraph 3: Clarify the statement that vertical sampling locations were controlled by the presence of sand-rich zones. Does this mean that samples were collected only in sand-rich zones?

106. Page 8-45, Paragraph 4: The first sentence is this paragraph is confusing. Is groundwater flow away from each of the three source areas to the northeast, east, and

southeast or do these flow directions assume all three source areas?

107. Page 8-48, Paragraph 1: Indicate whether any of the wells in this area (south of Old Gurnet Road) are screened in bedrock.

108. Page 8-49, last sentence in section 8.4.1: Specify that VOCs were detected in groundwater sampled at 83 feet below ground surface.

109. Page 8-50, Figure 8-20: The following comments pertain to this figure.

- Include the location of the underground storage tank and associated piping on the figure.
- Provide a key on the figure which describes the validation symbols used.
- Provide a figure identical to this one, but which shows field GC results.

110. Page 8-51, Paragraph 1: Provide a possible explanation for contamination found upgradient of the FTA, i.e., TP-1101.

111. Page 8-55, Paragraph 1: Include the justification for terminating MW-304 at a depth of 38 feet.

112. Page 8-55, Paragraph 1: Provide the rationale for selecting which three soil samples would be analyzed for TCL organics and inorganic compounds.

113. Page 8-58, Paragraph 2: Provide an explanation for the presence of bromodichloromethane and toluene in the deep bedrock monitoring wells.

114. Page 8-60, Paragraph 1: This paragraph states that bedrock contamination is not related to the Eastern Plume. Provide further discussion regarding the basis for making this conclusion.

115. Page 8-60, Paragraph 1: Provide further discussion regarding the conclusion that arsenic detected in MW-308 is probably related to the presence of sulfide minerals in the bedrock. If the presence of arsenic is related to minerals in bedrock, why is arsenic detected in only one of the bedrock wells?

116. Page 8-60, Paragraph 2: Include a background range for sulfate and indicate the basis for assuming this background level.

117. Page 8-62, Paragraph 2: Include a discussion of the source of contaminants at TP-1101 in this paragraph.

118. Page 8-66, Paragraph 1: Indicate why problems are associated with CLP VOC data in Site 11 soils only and is not a problem at all sites where soil samples have been collected.

119. Pages 8-66 to 8-70: Provide further discussion regarding the correlation between higher contaminant concentrations and high water levels. Indicate whether this correlation has been observed in any instances other than the two sampling events involving MW-1103. Indicate whether the Navy will develop an approach for characterizing contamination of deeper soils.

120. Page 8-75, Paragraph 1: Isn't shallow groundwater contamination also found at the Site 11 source area?

121. Page 8-77, Paragraph 2: Based on historical land use why might pesticides have been used in this area?

122. Page 8-79, Section 8.6: Discuss sorption of DDE, PAHs and PCBs at Site 11 in terms of the sorptive properties of the soils at Site 11.

123. Page 8-82, Paragraph 2: Indicate how estimates for the values chosen for $f_{oc}$ were derived. Provide the source of the $K_{oc}$ value. Justify the selection of MW-1103 to obtain values of TCA and TCE concentration in soil.

124. Page 8-84, Paragraph 2: Refer to or provide specific calculations performed to determine vertical and horizontal components of flow (55 feet of vertical flow for every 275 feet of horizontal flow).

125. Page 8-88, Paragraph 1: Discuss, in terms of groundwater flow directions, the source of groundwater contamination northeast of the FTA.

126. Page 8-90, Paragraph 1: Refer to the calculations performed to derive seepage velocities. Justify the selection of MW-306 for total VHO concentrations and the values used for near-source groundwater concentrations.

127. Page 8-90, Paragraph 1: The results of the modeling effort are confusing. For example, one sentence states that the model was calibrated to the concentrations of VHOs in MW-306. The next sentence states that the model estimates VHO concentration at MW-306. These two statements appear to be contradictory. Clarify this discrepancy and clearly

state whether the model was used to back-calculate to source concentrations or whether source concentrations were used to calculate well concentrations.

128. Page 8-90, Paragraph 1: Provide a reference for the statement that "groundwater concentrations near DNAPLs are typically 10 percent of solubility value".

129. Page 8-91, Paragraph 1: The text states that groundwater concentrations should begin to decrease at MW-306 in the near future. Provide quantitative estimates, if possible, of the period of time and degree of dilution.

## 9.0 EXPLOSIVE ORDNANCE DUMP TRAINING AREA - SITE 12

130. Page 9-1, Paragraph 2: This paragraph discusses current extent of the EOD area and current use. Include a discussion regarding whether this is the only area used for EOD activities in the past.

131. Page 9-2, Figure 9-1: Section 9.5.1 states that chromium, lead, and phosphorous were detected in all soil samples, however, these compounds are not indicated on the figure. Include these contaminants and the concentrations at which they were detected in Figure 9-1.

132. Page 9-4, Paragraph 1: Provide the rationale for selecting the depths at which samples were collected.

133. Page 9-4, Paragraph 2: Indicate the total depth of the test pits.

134. Page 9-6, Paragraph 2: The first sentence of this paragraph is misleading and should be deleted. Knowledge of environmental contamination at this site is restricted to shallow soils because only shallow soils were sampled. This sentence must be revised to indicate this or be deleted.

135. Page 9-6, Paragraph 2: Why is the nitrogen detected in TP-1203 not included in the discussion summarizing contamination in the preceding section.

136. Page 9-6, Paragraph 2: Section 9.5.2 states that chromium, lead and phosphorous are believed to represent background levels of these metals, however, page 9-3 acknowledged that these metals may be expected at elevated levels based on the past uses of the site. Provide or refer to a table showing local background concentrations for these metals.

137. Page 9-7: Section 9.6 states that mercury and nitrate/nitrite will partition into soils. Is this the case

for the types of soils found at NASB? Provide a reference to support this statement.

## 10 OLD DUMP NO. 3 - SITE 14

138. Page 10-2, Figure 10-1: Clearly indicate on the map the suspected location of Site 14 based on the 1946 base map of NASB.

139. Page 10-5, Figure 10-2: It appears that the majority of the anomalies are along the eastern portion of the site, adjacent to Taxiway A. What are the sources of these anomalies.

## 11.0 OTHER GROUNDWATER SAMPLING

140. Page 11-1, Paragraph 2: The first paragraph of section 11.1 discusses Sites 1 and 3 and refers to Table 11-1 and Figure 8-20. However, Table 11-1 lists results for Site 13 groundwater. Figure 20 presents results for Site 11 soils. Provide correct tables and figures for this section.

141. Page 11-3, Table 11-1: Revise this table to indicate for each well and for each constituent whether a constituent was not detected or was not analyzed for.

142. Page 11-4, Paragraph 1: What is the conclusion regarding inorganics at Site 13 based on the resampling results in Table 11-1.

## 12.0 SUPPLEMENTAL REMEDIAL INVESTIGATION SUMMARY AND CONCLUSIONS

143. Page 12-2, Bullet No. 3: The discussion of groundwater does not indicate that monitoring wells were installed and sampled. Indicate this in this summary.

144. Page 12-2, Bullet No. 4: The description of elevated l vels of inorganics is confusing. Are elevated levels of inorganics in all Site 8 monitoring wells attributable to silt- and clay-rich soils or is this a factor in OW-812 and OW-814 only?

145. Page 12-3, Bullet No. 3: State whether high levels of inorganics in MW-811 are site related or a function of the media in which they are screened.

## 13.0 BASELINE PUBLIC HUMAN AND ENVIRONMENTAL RISK ASSESSMENT AND APPENDIX O

146. General, Tables:

- Several inconsistent and confusing toxicological and biochemical terms have been used (e.g., see Tables O-1, O-3, O-4, O-5, O-6, O-7, and O-8). Terms such as toxicokinetic factor, criteria (used to indicate RfD in the calculation of hazard index), standard guidelines (in tables), body dose (formula in the calculation of uptake dose) etc., are incorrect and scientifically inappropriate. The absorption factor applied in the calculation of dermal or ingested dose uptake is an arbitrary absorption index for a group of chemicals and does not consider the kinetics and dynamics of absorption of individual chemical species based on physio-chemical and biological considerations.

- The combined dose calculations for dermal and ingestion routes is not an effective communication style. Exposure assumptions and absorption factors have been combined in the tables, confusing the reader. The sequence of terms in the tables (e.g., Amount of Soil Contacted, Amount of Soil Ingested, Dermal TK Factor, Ingestion TK Factor, Ingested Body Dose, Dermal Contact Body Dose) is not in order. Columns should be interchanged in all the tables to reflect the sequence of presentation. Terms such as summary hazard index, standard guidelines, criteria, toxicokinetic factor, dermal TK factor, ingestion TK factor, body dose should be deleted and replaced with appropriate terms.

- Table format, presentation including footnote description for Tables O-3 to O-8 and Tables O-9 to O-12 are internally inconsistent. A uniform table format should be adopted.

- Tables O-9 to O-12 have a typographic error (see 'noncarcinogenic').

- The format for Tables O-3 to O-8 should be changed; the routes of exposure should be split into two separate tables and follow a consistent format with respect to Tables O-9 to O-12.

147. General: Quantitative risk characterization cannot be performed for chemical mixtures, formulations, and chemicals for which quantitative toxicity parameters are unavailable. Quantitative risk characterization of a mixture of polycyclic aromatic hydrocarbons (PAHs) for noncarcinogenic and carcinogenic effects has been performed based on the

toxicity parameters for benzo(a)pyrene. However, the tables do not indicate the assumption of toxic quivalence for PAH. This should be incorporated in the tables as well as in the text. Interpretation of PAH risks as equivalent of benzo(a)pyrene toxicities is an overestimation of risks. However, such an estimation is not too conservative considering the presence of synergistic interactions of weak carcinogenic PAHs in mixture. This experimental carcinogenesis observation should be referred to in the text.

148. General: In estimating hazard index and carcinogenic risks, most probable risk (based on the mean concentration) and maximum risk (based on the highest concentrations in the medium) are typically calculated. Indicate whether the calculations (as in the tables) are based on mean or maximum concentration levels. Tables O-9 to O-12 indicate risk calculations based on mean concentration values, whereas Tables O-3 to O-8 make no mention of concentration.

149. General: A brief discussion on the sensitive receptors in the exposed population (such as children, specific occupational groups, etc.), and uncertainties in the exposure estimation, dosage, and risk calculations should be included.

150. Page 13-1, Paragraph 1: In lines 7 and 8, delete the words "assess site conditions in the absence of remedial actions" and insert the following:

"provide an evaluation of the potential threat to human health and the environment in the absence of any remedial action. They provide the basis for determining whether or not remedial action is necessary and the justification for performing remedial actions."

151. Page 13-2, Paragraph 2: Include the Region 1 Risk Assessment Guidance as a reference.

152. Page 13-3, Paragraph 2: Acceptable intake-chronic (AIC) and Acceptable Intake-Subchronic (AIS) have been replaced by chronic RfD and Subchronic RfD, respectively. Change the text to reflect this.

153. Page 13-5, Paragraph 2: Although asbestos was not detected in the soil samples, certain information has not been adequately reported, including probable future land use. In the absence of information on future land use and public access for this area, a hypothetical exposure scenario has to be used for asbestos fiber exposure.

154. Page 13-5, Paragraph 2: Revise the statement regarding the depth to groundwater at Site 5 to indicate that this is an stimate since no monitoring wells or piezometers were installed at this site.

155. Page 13-7, Paragraph 3: The location of the fire training area is not restricted and although it is not directly adjacent to base housing areas, it is still very accessible.

156. Page 13-8, Paragraph 2: Why does this discussion regarding surface soil contamination at Site 11 not include pesticides detected at TP-1101?

157. Page 13-8, Paragraph 2: What is the concentration of non-carcinogenic PAHs? What non-carcinogenic PAH compounds have been detected?

158. Page 13-9, Toxicity Assessment: A table with the RfD, CPF and weight of evidence, and the source of this information, should be provided for all contaminants of concern.

159. Page 13-9: Asbestos is a Class A carcinogen (meaning it is a human carcinogen) according to the EPA's carcinogen classification schemes. This is based on increased mortality and incidence of cancer of the lung, mesothelioma, and gastrointestinal cancers among workers exposed occupationally to asbestos fibers. However, data on asbestos animal carcinogenicity is limited to gastrointestinal tumors in rats exposed to chrysotile fibers (> 10 $\mu$M length). Epidemiologic data on the incidence of gastrointestinal cancers among humans are limited.

Based on available human data on respiratory carcinogenesis among workers exposed to asbestos fibers, EPA has developed an inhalation unit risk of 2.3E-01 f/ml. Air concentrations of asbestos fibers and the corresponding risk levels (in parenthesis) are as follows: 4E-04 f/ml (1E-04), 4E-05 f/ml (1E-05), 4E-06 f/ml (1E-06). The existing method for asbestos cancer risk characterization is based on the number of asbestos fiber concentration. There are no specific methods to create hypothetical scenarios for asbestos release and exposure. It is important to note that asbestos toxicity is determined by such factors as type of fiber, the fiber length, route of exposure, and existence of synergy.

For the purposes of risk characterization, a hypothetical exposure scenario could be created based on reported av rage exposure in occupational setting (see, IRIS database for detailed discussion and a list of reported average exposure for various occupational groups). Conservative assumptions should be made regarding the type of asbestos inhaled, fiber length, and duration of exposure. Exposure estimates should

be calculated for various receptors for a period calculated as fiber-yr/ml and averaged for life-time period. The life-time averaged fiber numbers could be compared with the EPA risk levels.

160. Page 13-11, Paragraph 3: The worker exposure for the FTA is based on the number of historical fire training activities only. What about maintenance of the area? It seems that an exposure of only six days per year may be low.

161. Page 13-11, 3rd paragraph, last sentence: Change "incremental carcinogenic risk level" to "incremental lifetime carcinogenic risk".

162. Page 13-12, last sentence: Modify sentence to indicate that the contaminants identified at Site 12 do not pose a carcinogenic risk to the exposed receptors.

163. Page 13-13, Table 13-3:

- o Justify the assumed frequency of contact for worker exposure. Six days per year appears low.
- o The frequency of contact for all groups seems under-estimated. The numbers presented in this table are more reasonable for trespassers than for residential or worker's scenario. Provide the basis for assuming the presented values.
- o Include the adult residential exposure scenario.

164. Page 13-14, Paragraph 1: Address the potential impacts which may be caused to the tidal area when the Eastern Plume begins discharging to the area.

165. Page 13-4, Paragraph 2: Include some reference to groundwater in the summary section.

166. Table O-2: The toxicity value (RfD) used for lead in th calculation of HI is incorrect (1.4E-04). The correct RfD value is 1.4E-03.

167. Table O-2: Toxicity information should include PAHs.

168. Tables O-3 through O-8: The following comments pertain to these tables.

- o Why do these tables use the exposure data from Table 13-3 rather than Table O-1?
- o Are these tables for Site 11?

- The frequency of contact seems to underestimate the worker and residential scenario.

169. Table O-3, O-5, and O-7: The concentration for non-carcinogenic(nc)-PAHs, rather than the total PAHs, should be assessed for nc-PAH effects. Toxicity information is available for acenaphthene, anthracene, fluoranthene, flourene, pyrene, and napthalene. Discuss whether these nc-PAHs are present at the site and if they are assess them for systematic effects.

170. Table O-7 and O-8: The ingestion rate for soil should be 0.1 g/event, rather than 0.2 g/event, for 7-12 year old children.

171. The residential exposure scenarios presented in Tables O-9 through O-12 (which are based on Table O-1) are more reasonable than the ones presented for Tables O-5 through O-8. These exposure scenarios should used in Tables O-5 through O-8.

APPENDIX N - SOLUTE TRANSPORT MODELING

172. Page N-1: The description of the solute transport modeling provides insufficient information regarding the assumptions and methods used. This section should be prefaced with a statement of the objectives, the approach used, and a detailed description of the model, including the source, type of transport equation (e.g., two-dimensional advective-dispersive flow), method of solution (analytical, finite-difference, etc.), and discussion or reference to the validity/verification of the model. In addition, provid specific references and/or justification for the following items:

- the equation used to calculate seepage velocity
- the source area dimensions
- aquifer thickness in source area
- dispersivity values
- attenuation/degradation rate
- hydraulic conductivity
- hydraulic gradient
- selection of source locations

The results should be summarized in a manner that allows the reader to easily interpret the range of output values in relation to the range of input values (graphs, tables). In addition, provide a discussion of the uncertainty in the modeling results.

U.S. DEPARTMENT OF COMMERCE
National Oceanic and Atmospheric Administration
NATIONAL OCEAN SERVICE
OCEAN ASSESSMENTS DIVISION
HAZARDOUS MATERIALS RESPONSE BRANCH
c/o U.S. Environmental Protection Agency
Waste Management Division - HEE-6
J.F. Kennedy Federal Building
Boston, MA 02203
1 May 1991

Ms. Meghan Cassidy
U.S. EPA Waste Management Division
J.F. Kennedy Federal Office Building
Boston, MA 02203

Dear Meghan:

Thank you for the the three most recent Brunswick NAS documents produced by E.C. Jordan; 1. the Draft Focused Feasibility Study for Sites 1 and 3, 2. the Draft Supplemental Remedial Investigation for the entire site, 3. the Draft Supplemental Feasibility Study for Sites 5, 6, and 12.

1. The Draft Focused Feasibility Study for Sites 1 and 3. It is clear that comments made by NOAA are completely ignored by Jordan/the Navy in subsequent documents. For example, in my 1 May 1990 review of the Draft RI, Risk Assessment and Post-Screening Workplan I noted that in Mere Brook "During the first three sampling rounds, iron and lead exceeded their chronic AWQC and zinc exceeded its acute AWQC, whereas in the fourth round of sampling cadmium, chromium, copper, lead, mercury and zinc exceeded their respective acute AWQC and iron and nickel exceeded their chronic AWQC." I also noted that "No hardness data were supplied in the RI, so it is not known if the criteria based on 100 mg $CaCO_3$/l are appropriate to surface waters from Brunswick NAS. The target levels should be based on water hardness at Brunswick NAS." On Pages 2-7 and Table 2-1 of this document both these comments were apparently ignored. Only zinc and iron in excess of their AWQC were addressed and a hardness of 100 mg/l as $CaCO_3$ was considered. Hence, the Ecological Surface Water Target Clean-Up Levels are either incomplete (other inorganics need to be considered) or inappropriate (AWQC levels need to be defined by a site-specific hardness)

I also disagree with the 1.0 mg/kg target level for mercury in Mere Brook sediments (as originally stated in my 1 May 1990 letter). Based on available literature, this proposed target level should be, at least, reduced to 0.2 ppm. Mercury bioaccumulates and biomagnifys to a great degree - this appears to be the case at the Charles George site in Massachusetts.

In reviewing the remedial alternatives NOAA would accept any of the alternatives besides No-Action and Minimal Action. However, NOAA would prefer the Cap/Groundwater Extraction/Treatment or the Cap/Passive Groundwater Collection/Treatment alternatives (1, 3 E or F). The Containment alternative (1,3 C) might result in some latent discharge of contaminants into Mere Brook and the Passive Groundwater Collection/Treatment (alternative 1,3 D) might result in some contamination bypassing the system; this latter

alternative also does not specifically address the removal of the inorganics although the pre-treatment step would probably do so.

2. The Draft Supplemental Remedial Investigation for the entire site. NOAA previously in writing (note RI review - 1 May 1990 and reviews of Sampling Rounds 2, 3, and 4) and at TRC meetings stressed the need to further assess sediment and surface waters at Site 8. These requests were apparently ignored despite the elevated inorganic levels found in some rounds (e.g., zinc and cyanide). Leachate inorganic levels were elevated at Site 8 in all rounds. In addition, Site 9 showed high zinc and cyanide levels in Merriconeag Stream, elevated levels was also found downstream. As discussed above, it is becoming increasingly frustrating to make such requests only to have Jordan and the Navy disregard them. I found a response to the Site 8 request on Page P-2; NOAA is certainly concerned with impacts to the Androscoggin River, however general environmental impacts are also considered especially in streams that discharge to rivers that support natural resources of trust. The dilution of contaminants in the river is very likely but the fact remains that the extent and nature of the contamination along this stream is still not known. It is also not known what species may be impacted by this contamination - Jordan admits "some deleterious impacts are occurring in the aquatic habitat downstream from Site 8". Round 4 sampling may have put this issue to rest; sediment and water sampling should be completed in the streams adjacent and downstream of Sites 8 and 9. Lastly, I disagree with Jordan's answer on Page P-15 concerning the source of zinc. Zinc either approaches or is greater than the acute AWQC adjacent to Site 8 (Round 3) and Site 9 (Round 4). I know of no other site where low ph and local geology is the cause of such elevated surface water zinc levels (>acute AWQC).

3. The Draft Supplemental Feasibility Study for Sites 5, 6, and 12. NOAA has no trustee resources potentially affected by these three sites. In addition, the three sites do not appear to pose an aquatic threat. Hence, no comments are included.

Let me know if you have any questions. I would appreciate Jordan and/or the Navy reviewing it.

Sincerely,

Kenneth Finkelstein, Ph.D.

ATTACHMENT 1 (May 30, 1991)

EXECUTIVE SUMMARY

1. Page ES-10, Paragraph 2: A discussion regarding the solvent burning area is included. The solvent burning area was discussed in the IAS and the actual existence of the feature was never confirmed.

1.0 INTRODUCTION

2. Page 1-8, Paragraph 1: Site 14 is discussed in Section 1.0

2.0 ARARS

3. Page 2-4, Paragraph 2: Maine MCLs are consistent with federal MCLs. Maine MEGs are criteria and are only relevant and appropriate for those compounds and contaminants for which there are no other promulgated standards. The approach to setting target clean-up levels for all sites at NAS Brunswick has been to use federal MCLs, MCLGs, or a risk-based approach; however, Maine MEGs are included in Table 2-4.

4. Page 2-6, Table 2-1: Maine Rules Relating to Testing of Private Water Systems are included in the reference to Maine

Drinking Water Rul s (10-144A CMR Chapters 231-233) in Table 2-1, under state requirements pertaining to groundwater.

5. Page 2-7, Table 2-1: The Asbestos NESHAP are now referenced under "Consideration in the RI/FS".

6. Page 2-8, Table 2-2: This table is revised to reflect all comments; however, the Drinking Water Equivalent Level (DWEL) are not listed for sodium and naphthalene. DWELs are not referenced in the text; therefore, they are not be listed in the table.

7. Page 2-11, Table 2-4: The Draft Final RI Report, August 1990, stated that flood hazard maps by the Federal Emergency Management Agency (FEMA) indicate 100-year flooding at NAS Brunswick is confined to Mere Brook beaver marsh Channel. Streams near the facility generally have steep, high banks that are not likely to overflow. Tidal wetlands and areas covered by alluvial silts at the southern end of Mere Brook beaver marsh and the base are flood prone. None of the NAS Brunswick RI/FS sites are anticipated to be inundated by 100-year floods, although channels bordering Sites 1, 2, 3, 8 and 9 will be scoured by increased flows.

Monitoring wells potentially may be required in the floodplain areas as part of several proposed remedial alternatives. Therefore, ARARs pertaining to floodplains, have been included.

8. Page 2-15, Table 2-4: Town Ordinance and State Guidelines are included in this table.

9. Table 2-5: This table is revised to reflect all comments.

**3.0 FIELD PROGRAM DESCRIPTION AND RATIONALE**

10. Page 3-2, Paragraph 2: A statement regarding the results of PI meter readings is included. Anomalous PI meter readings were not observed at the SW-125A location.

11. Page 3-12, Paragraph 1: A statement regarding the basis for selecting the depth of bedrock wells ia included. Bedrock well depths were determined based upon the depths of contamination observed during the PCPT groundwater survey.

12. Page 3-20, Paragraph 3: This paragraph is modified to better describe criteria used in determining the sample locations. Locations were determined based primarily on geophysical results.

13. Pag 3-24, Paragraph 1: Samples w re analyz d for all TCL VOCs using drinking water methods as described in the text. No change to text.

14. Page 3-26, Paragraph 2: Three hydraulic conductivity tests were performed at MW-302, MW-305, and MW-319 to provide for a more representative geometric mean of the hydraulic conductivities at these locations. Hydraulic conductivity slug tests at several monitoring wells were rejected due to excessive hydraulic head recovery prior to data collection with the Hermit Data Logging Instrument.

15. Page 3-28, Paragraph 2: The following is added after the 2nd sentence of paragraph 2;
The number of measurements collected at each gauging station was dependent on the observed bed condition and rate of current flow. Stream widths varied from less that 2.5 feet to over 16 feet at measurement locations. Current velocities and bed profiles also varied greatly. Field judgment was used to collect comparable data at each location based on the observed conditions.

**4.0 ORION STREET ASBESTOS DISPOSAL SITE-SITE 5**

16. Page 4-1, Paragraph 2: Th site description and history are based on the IAS report.

17. Page 4-2, Figure 4-1: This figure shows the area of investigation and is not meant to infer the extent of the actual disposal site. Figure 4-1 has been modified for better clarification.

18. Page 4-3, Paragraph 3: The magnetometer survey was conducted because of the possibility of metallic material being buried in any landfilling operation. The IAS did not specifically state that the pipes buried at this site contain ferrous material. However, asbestos piping is typically iron piping insulated with asbestos material and not just asbestos by itself. The GPR technique was used to corroborate the findings of the magnetometer survey. Even if the piping did not contain any ferrous material, the GPR technique would most likely detect anomalous readings. The text has been modified for clarification.

19. Page 4-5, Paragraph 1: Rationale for the selection of th surface sample locations is provided. Surface samples were collected to test for the presence of asbestos, since solid asbestos particles may migrate in the air.

20. Page 4-5, Paragraph 2: Based on groundwat r surface contours developed for the interpretive shallow groundwater surface contour map (Figure 8-12, now Figure 8-13) the hydraulic gradients at both the Sites 1 & 3 and the Site 5 areas are interpreted to be generally similar. The subsurface geology, and therefore the porosity and hydraulic conductivity of the aquifer materials, at Site 5 are also expected to be generally similar to that found at Sites 1 & 3. Based on these interpretations, seepage rates at Site 5 are interpreted to be similar to those observed at Sites 1 and 3.

21. Page 4-6, Paragraph 2: The presence of buried asbestos at this site is indicated by a sign. The geophysical survey was conducted over an area that is larger than observations indicate as being a filled or disturbed area. The area of anomaly B is, therefore, assumed as being the only candidate for a burial site.

22. Page 4-7, Paragraph 2: The sentence was changed to indicate that environmental contamination was not detected in surface soils.

**5.0 SANDY ROAD RUBBLE AND ASBESTOS DISPOSAL SITE - SITE 6**

23. Page 5-1, Paragraph 1: The site description and history are based on the IAS report.

24. Page 5-1, Paragraph 1: The Navy will ensure that the removal of material from the stockpile will be stopped.

25. Page 5-5: Porosity is the volume of pore space/volume of bulk solid x 100. A typical porosity value for granular soils is from 5-40%. A typical porosity value for the sand-rich aquifer materials observed at BNAS was estimated to be 25%.

26. Page 5-8, Paragraph 2: Samples were analyzed for asbestos content. This paragraph states, "The soil samples were analyzed for the presence of asbestos material."

## 6.0 PERIMETER ROAD DISPOSAL SITE - SITE 8

27. General: Previous results are summarized. PAHs are not detected in Site 8 groundwater.

28. General: Soil samples were taken as part of the treatability testing effort. The results of the treatability tests are provided in the Focused Feasibility Study for Site 8.

29. Page 6-2, Figur 6-1: MW-811 is included on Figur 6-1.

30. Page 6-3: A reference to Section 3.12.1 is made following the sentence discussing hydraulic conductivities. Rationale for a porosity value of 25% is discussed in comment number 25.

31. Page 6-3, Section 6.2: A record and discussion of both precipitation and barometric effects that occurred during the Jordan Avenue Wellfield test are now included in the RI text.

32. Page 6-3, Section 6.2: The Jordan Avenue wells are screened within overburden soils which overlie the Presumpscot clay formation. This is incorporated into the RI text.

33. Tables 6-1, 6-2, and 6-3: Chromium was not detected in CLP analysis. The chromium detected at Site 8 was hexaval nt chromium (see Draft Final RI Report).

34. Page 6-4, Figure 6-2: A description of the shading used to delineate the extent of Site 8 is included on Figure 6-2.

35. Page 6-5, Paragraph 2: Both precipitation and barometric effects were recorded during the pumping test. This data is correlated with the aquifer results in the RI report text.

36. Page 6-10, Paragraph 2: The chromium results r f rred to were for hexavalent chromium. TCL inorganic analysis did not detect chromium in Round 4 or in Round 5. The tables report only TCL inorganic results.

37. Page 6-10, Paragraph 2: More discussion of Site 8 is included as requested.

38. Page 6-12, Paragraph 1: A discussion of the relationship between the observation wells and Site 8 is developed in Sections 6.4 and 6.5. No change to text.

39. Page 6-12, Paragraph 2: The wells screened in silt/clay are identified.

40. Page 6-12: A table with appropriate drinking water standards and background levels is provided.

41. Page 6-12: A complete discussion has been provided (see pgs. 6-12 through 6-14).

42. Page 6-12: Copies of field logs are provided in Appendix H. It is not believed that MW-808 needs to be redeveloped.

43. Page 6-14: Mor discussion is provided concerning carbon tetrachloride in OW-813. Discussion includes the fact that OW-813 is not downgradient of Site 8 source area and that carbon tetrachloride has not been previously detected at Site 8.

44. Page 6-14, Paragraph 1: A discussion of base-wide wells screened in clay is included.

45. Page 6-14, Paragraph 3: The observation wells are upgradient of the Site 8 source area, but a discharge divide (Site 8 tributary) occurs between the wells and the source area. The groundwater from the observation wells also discharges to this tributary.

46. Page 6-15: The discussion concerning partitioning of inorganics is modified.

**7.0 NEPTUNE ROAD DISPOSAL SITE - SITE 9**

47. General: Comment concerning the Site 9 building is noted.

48. Page 7-4, Paragraph 2: This change is incorporated into th text.

JHW079103.021

49. Page 7-7: Seepage v lociti s at the Sit 9 area w re based on the seepage velocity equation of V=Ki/n where K=1.8 ft/day, i=.01 to .05 feet per foot, and n=25%.

50. Page 7-8, Paragraph 2: Only one sample was taken at CP-153 due to the limited amount of saturated thickness above the clay (i.e., there was not enough saturated thickness for more than one sample).

51. Page 7-8, Paragraph 2: VC was not included due to the inability of the field GC to analyze for VC, and was not identified in the Work Plan. Other indicator compounds observed at Site 9, including 1,1-DCA and 1,2-DCE, were included as target VOCs. No change to text.

52. Page 7-9, Paragraph 1: Rationale for 18-foot sampling depth is included. Samples were collected at 18 bgs to characterize shallow groundwater where VOCs had been detected in the past.

53. Page 7-12, Paragraph 1: Field screening results were confirmed in the laboratory (see pg. 7-9, paragraph 3). No change to text.

54. Page 7-12, Paragraph 2: Th paragraph is r worded to indicat that the field GC did not det ct VOCs in TP-904.

55. Page 7-14, Paragraph 2: Specific reference to surface and subsurface soils is added to clarify the reference to VOCs.

56. Page 7-14, Paragraph 2: The words "low levels" are removed.

57. Page 7-15, Paragraph 1: Further discussion of the PAH distribution and relationship to the barbecue pit is included.

58. Page 7-15, Paragraph 1: Discussion of how the contamination will be addressed is included in the FS. The RI is not the appropriate document for this discussion.

59. Page 7-15, Paragraph 1: A more complete discussion of the historic usage of DDT is included. The IAS indicated that DDT was used base-wide.

60. Page 7-16: The line on Figure 7-6 defines the known distribution of VOC groundwater contamination, and is not an isoconcentration line.

61. Page 7-17: A more complete discussion of the leachfield including design and dimensions is included. The history of operation is already included.

62. Page 7-17: More discussion of the usage of Building 201 is included. The building has been used as an enlisted club with dining room and lounge since 1952, when it was built.

63. Page 7-17: The solvent burning area was discussed in the IAS as only a possible occurrence. The existence of such a burning area has never been confirmed based on explorations conducted to date.

64. Page 7-18, Paragraph 1: Although VC is detected above its MCL, the actual concentration is between 10 and 40 g/L.

65. Page 7-18, Paragraph 1: Potential biodegradation products of PAHs is discussed.

66. Page 7-18, Paragraph 2: The reference to Site 11 soils is changed to Site 9 soils.

67. Page 7-19, Paragraph 2: Groundwater samples along th southern side of the tributary were collected at the requ st of USEPA. The Navy had indicated in the Draft Final RI that

Site 9 groundwat r was discharging to the tributary. The samples were taken to determine if the Site 9 groundwater contamination was passing beneath the tributary. (See pg. 7-3) (See pg. 7-7 for discussion of discharge to tributaries.)

68. Page 7-19, Paragraph 2: Air blanks were taken in Jun , 1988 as part of the soil gas survey at Site 9. This information is included in the text.

69. Page 7-20: The discussion concerning partitioning of inorganics is modified.

**8.0 FIRE TRAINING AREA AND EASTERN PLUME - SITE 11**

70. All Figures: A description of the shading that represents the lateral extent of each site is included on the figures.

71. Figure 8-13: Water level elevations for MW-319, P-104, P-105, P-106, and P-107 are included in this figure. However, due to the orientation of these groundwater elevation level points (i.e., generally in a line trending north to south) groundwater contours are drawn in this portion of the site. The primary purpose of this groundwater

surface map is to illustrate groundwater flow directions in the southern portions of eastern plume area.

72. Figures 8-23, 8-30 and 8-31: A description of what the plume boundaries delineate is included in the legends of each figure.

73. Page 8-2, Paragraph 1: 19<u>40</u> Field Program is changed to 19<u>90</u> Field Program.

74. Page 8-2, Paragraph 1: No. The wording is changed from "is needed" to "was needed." This paragraph is meant to state the history of the site and to establish a need for the work conducted during the 1990 Field Program.

75. Page 8-2, Paragraph 2: The end of the paragraph now states "...area during the 1990 Field Program."

76. Page 8-5, Paragraph 2: This change is incorporated into the text.

77. Page 8-5, Paragraph 2: Section 8-6 is referenced her .

78. Page 8-5, Paragraph 3: Rationale for selecting the three soil samples from each test pit is included.

79. Pag 8-5, Paragraph 4: A r f rence to the discussion of the GC results of the air sample collected at the upwelling "spring" is included.

80. Page 8-7, Paragraph 2: The statement is changed to say that "groundwater in the sand-rich zones appears to exist under semi-confined to confined conditions." The location of water levels within monitoring wells that intersect this unit support the interpretation and these are included in the RI text. The transition zone is described in more detail in Section 8.3.2.

81. Page 8-8, Paragraph 1: This is the same clay found beneath other portions of the base and is part of the Presumpscot Formation.

82. Page 8-8, Paragraph 3: The text is modified to state that Figure 8-1 shows the locations of the cross sections.

83. Page 8-10, Figure 8-4: These sand units are genetically the same and are not distinguishable. The cross section shows these to be the same unit that becomes confined by the less permeable transitional unit farther to the east.

84. Page 8-14, Paragraph 2: Th lower sandy soils are confined by the transition soils. This statement is changed.

85. Page 8-16, Paragraph 2: CP-136, CP-137, and CP-146 were the only borings/CP locations advanced to bedrock during the 1990 Field Program that did not encounter clay throughout their explorations. Every other boring/CP exploration advanced to bedrock did encounter some clay, if just in lenses or non-continuous strata. The text is modified to clarify this fact.

86. Page 8-16, Paragraph 2: Earlier in this section it is stated that the stratigraphic column above the clay, called the Transition unit, "includes many possible combinations in the percentages of sand, silt, and clay constituents." In the case of CP-129, although clay was encountered, the interpretation of the stratigraphic sequence in this area is that the continuous, thick clay of the lower portions of the Presumpscot Formation is not present. This paragraph is modified to give a clearer description of this geology.

87. Page 8-17, Paragraph 1: The rationale of the well placements installed during the 1990 Field Program are varied and ar described in the Addendum to the Post-Screening Work Plan. A total of 28 wells were installed during the 1990 Field

Program, including four additional wells (MW-320 through MW-323) that were added to the program during the field effort. MW-320 through MW-322 were installed in a potential near source area at Site 6, and are therefore placed near the water table. MW-323 is a bedrock well installed downgradient of Site 11. Of the remaining 24 wells, seven are bedrock wells. Two of the 17 remaining wells (MW-314B and MW-315B) are shallow wells paired with deeper wells that are screened just above the clay. Of the 13 remaining wells, 12 well placements are either described in the Addendum to the Post-Screening Work Plan or are placed just above clay. MW-312 was placed below a thick silt/clay sequence and just above till, and is screened at the same elevation as the contamination detected in MW-311. The text is not changed.

88. Page 8-18, Paragraph 2: The sentence is changed to read "Surface drainage from areas except those in the vicinity of Site 7 and 8 flows into Mere Brook or its tributary, Merriconeag Stream."

89. Page 8-22, Paragraph 3: Based on observations made in field, these sample stations provided the most accurate stream flow measurements.

90. Pag 8-23, Paragraph 3: S ction 3.12 is referenced in the text.

91. Page 8-23, Paragraph 3: Table 8-1 is the same as that shown in Table 8-3. Table 8-1 is removed from the text and the tables renumbered accordingly.

92. Page 8-29, Paragraph 2: The "deep, coarse-grained soils" referred to in this section are part of the transition zone. This is clarified in the text.

93. Page 8-29, Paragraph 3: A portion of the groundwater within the confined sandy soils discharges to the Harpswell Cov Watershed. A portion of this groundwater also discharges to either Mere Brook or Merriconeag Streams (see Figures 8-12 to 8-18).

94. Page 8-29, Paragraph 3: Harpswell Cove is tidally influenced. This is added to the text.

95. Page 8-29, Paragraph 3: The Harpswell Cove Watershed is shown in Figure 8-14 (identified and shaded as an interpretive discharge zone). A note is added to the figure indicating that this area is the Harpswell Cove Watershed.

96. Pag 8-30, Paragraph 1: Th "upper" and "lower" portions of the bedrock are more clearly defined in the text.

97. Page 8-30, Paragraph 1: The relative stratigraphic position of the bedrock wells are included in the text.

98. Page 8-30, Paragraph 2: The rationale for conducting packer tests at 20 psi is now discussed in the text.

99. Page 8-32, Paragraph 2: The bedrock fractures located within the interval from 93 to 97 feet was observed to have the highest groundwater flow in the bedrock system. The zone from 15 to 119 feet bgs was tested to evaluate the total flow through the bedrock system. As discussed on pg. 8-33, approximately 70 percent of the groundwater movement through the bedrock occurs over the 93 to 97 foot interval.

100. Page 8-40, Paragraph 2: A vertical-to-horizontal anisotropy of 10:1 is considered typical for stratified soils. The vertical groundwater flow rate of .14 feet/day is derived from the formula V=Ki/n where K = .95 ft/day (9.5/10); i = .038 ft/ft; and n = 25%. The text now identifies the flow as downward.

101. Pag 8-41, Paragraph 2: A referenc to Section 3.12 is made in the text.

102. Page 8-41, Paragraph 3: Porosity values for granular soils typically range from 5 to 40%. An effect porosity valu of 25% is considered to be representative of the sandy transitional soils observed at the site.

103. Page 8-41, Paragraph 3: The average seepage velocities presented for the site are based on the equation $V = Ki/n$ where $V$ = average seepage velocity, $K$ = hydraulic conductivity (ft/day), $i$ = hydraulic gradient, and $n$ = effective porosity.

Groundwater seepage velocities for the eastern plume sit in general are based on K values of 9.4 and porosity values of 25%. The average hydraulic gradients across the Eastern Plume site varied from .09 ft/ft in the vicinity of Site 11, to .05 ft/ft in the vicinity of Mere Brook, to .006 ft/ft within the clay trough area.

104. Page 8-43, Paragraph 2: Based on the interpretive vertical flow net constructed along profile C-CC' (Figure 8-19), groundwater is expected to flow upwards (discharge) into the Harpswell Cove Watershed area. Based on these constructions,

groundwater flow beneath the tidal ar a is not considered likely. The tidal area is apparently incised within the Presumpscot clay strata, and based on the stratigraphic location of the tidal areas relative to this clay, groundwater flow beneath the Harpswell Cove Watershed area is unlikely.

105. Page 8-44, Paragraph 3: The Post-Screening Work Plan states "Water samples will be collected from sandy zones outlined in the PCPT survey..."

106. Page 8-45, Paragraph 4: Groundwater flow from the Site 11 area is primarily to the northeast, east, and southeast. The text is modified to make this clear.

107. Page 8-48, Paragraph 1: MW-308, located near CP-129, is screened in bedrock.

108. Page 8-49, last sentence in section 8.4.1: Text is modifi d to incorporate the comment.

109. Page 8-50, Figure 8-20 (new Figure 8-21): Figure 8-20 has been changed to incorporate these comments.

110. Page 8-51, Paragraph 1: The potential for contamination to occur upgradient of the current FTA location is probably due to two reasons. 1) The exact location of the FTA has probably had some movement in the past prior to the installation of the concrete pad, and 2) When the fire training exercises occur spray from the water hoses can splash the fuels and solvents out of the containment pad. This information is added to Section 8.5.

111. Page 8-55, Paragraph 1: MW-304 was terminated at th clay layer as described in the Post-Screening work plan.

112. Page 8-55, Paragraph 1: Rationale for soil samples is provided.

113. Page 8-58, Paragraph 2: The presence of toluene and bromodichloromethane in the bedrock wells is discussed in Section 8-6 (see pg 8-92).

114. Page 8-60, Paragraph 1: The comment is inaccurate. Th text indicates that the inorganic distribution in the bedrock wells is not related to the Eastern Plume, and discusses this relationship.

115. Page 8-60, Paragraph 1: A further discussion of arsenic is included.

116. Page 8-60, Paragraph 2: Sulfate background levels are discussed in the Draft Final RI.

117. Page 8-62, Paragraph 2: A discussion of the source of contaminants at TP-1101 is included.

118. Page 8-66, Paragraph 1: Further discussion of the Site 11 soils is included. The discussion focuses on the fact that Site 11 soils are very sandy and that Site 11 is effectively the only site with VOC soil contamination.

119. Pages 8-66 to 8-70: The Navy believes that the discussion concerning water level and groundwater concentration is complete. This is the only instance where this relationship has been observed. The complete interval between the clay layer and the water table is screened at Site 11, and the data clearly indicate that the significant contamination and source of contamination are shallow near the water table, not deep near the clay layer. The Navy has developed remedial actions for the soil contamination, and these are presented in the FS. No change in text.

120. Page 8-75, Paragraph 1: Th comment is taken out of context. The specific reference to shallow groundwater contamination is to groundwater southeast of Sites 4 and 13. Two sentences before this discussion, the distribution of shallow groundwater contamination is identified (see pg 8-71, paragraph 2, sentence four). No change to text.

121. Page 8-77, Paragraph 2: A discussion of pesticide is now included.

122. Page 8-79, Section 8-6: Sorptive properties of DDE, PAHs, and PCBs is discussed relative to Site 11 soils.

123. Page 8-82, Paragraph 2: Estimates for Foc values are developed based on typical sandy soils in glacial outwash observed in New England. Koc values are referenced. MW-1103 was selected since it has the highest groundwater concentrations at Site 11.

124. Page 8-84, Paragraph 2: Specific calculations for vertical flow components were developed and are included in the text.

125. Page 8-88, Paragraph 1: The discussion of groundwat r flow to the northeast of Site 11 is presented on page 8-84. No change to text.

JHW079103.021

126. Page 8-90, Paragraph 1: S epag calculations is r ferenced. MW-306 was chosen because it has groundwater concentrations significantly greater than the current source concentrations. A variety of source concentrations were used (see Appendix N), and the observed concentrations at MW-306 were used to calibrate the model.

127. Page 8-90, Paragraph 1: The discussion of the modeling effort is modified to cleanup the confusing issues.

128. Page 8-90, Paragraph 1: A reference for the DNAPL concentration is given.

129. Page 8-91, Paragraph 1: The calculations predict that any time after three years the concentrations will begin to decrease, as a function of the lined FTA.

**9.0 EXPLOSIVE ORDNANCE DUMP TRAINING AREA - SITE 12**

130. Page 9-1, Paragraph 2: A discussion regarding whether this is the only area used for EOD activities in the past is now included. The IAS indicated that EOD activity did not occur on-base prior to 1981.

131. Page 9-2, Figur 9-1: The inorganic data is includ d on Figure 9-1.

132. Page 9-4, Paragraph 1: Rationale for selecting the depths at which samples were collected is provided.

133. Page 9-4, Paragraph 2: The second sentence reads, "Micaceous schist (bedrock) was encountered at 3 feet bgs in two of the pits (i.e., TP-1202 and TP-1203).

134. Page 9-6, Paragraph 2: The statement is accurate because the deeper soil samples in the test pits did not contain nitrate/nitrite or mercury. These compounds were found only in the near-surface 1-foot soil samples. No change to text. Near surface contamination is discussed in the text.

135. Page 9-6, Paragraph 2: The comment is inaccurate. Nitrogen was discussed in TP-1203 in the preceding section (se pag 9-6, paragraph 1, sentence 2).

136. Page 9-6, Paragraph 2: Background levels for chromium, lead, and phosphorus are discussed in the text.

137. Page 9-7: The partitioning of nitrate/nitrite and m rcury in soils are discussed further.

JHW079103.021

## 10. OLD DUMP NO. 3 - SITE 14

138. Page 10-2, Figure 10-1: The words "Dump Area No. 3" is added to the figure at the appropriate location.

139. Page 10-5, Figure 10-2: Section 10.3, the fourth sentence, is revised to read "The minor magnetic features recorded along the eastern portion of the survey are related to runway and taxiway lights, and steel drains."

## 11.0 OTHER GROUNDWATER SAMPLING

140. Page 11-1, Paragraph 2: Correct references for the tables are provided.

141. Page 11-3, Table 11-1: The table is revised as requested. TCL organics and inorganics were analyzed for the monitoring wells as shown in Table 11-1.

142. Page 11-4, Paragraph 1: The wells were not sampled to specifically monitor inorganics, as these compounds were not identified as a groundwater problem. However, as shown in Table 11-1 inorganic concentrations are consistent through time.

## 12.0 SUPPLEMENTAL REMEDIAL INVESTIGATION SUMMARY AND CONCLUSIONS

143. Page 12-2, Bullet No.3: The monitoring wells were added to the discussion.

144. Page 12-2, Bullet No.4: The discussion was clarified. The elevated inorganics at Site 8 wells and the observation wells is a function of the clay- and silt-rich soils.

145. Page 12-3, Bullet No.3: The high level of inorganics in MW-811 is related to the Site 8 source area.

## 13.0 BASELINE PUBLIC HUMAN ENVIRONMENTAL RISK ASSESSMENT AND APPENDIX O

146. General, Tables:

The Tables in Appendix D have been changed to follow a consistent format. The term "toxicokinetic factor" is no longer referenced in the table or text.

Typographic errors have been corrected.

147. General:

The assumption upon which the quantitative risk assessment for PAHs was based (i.e., based on the toxicity parameters

for benzo(a)pyren and naphthalene) has b en included in the tables and text.

148. General:

The Tables have been labeled to indicate whether mean or maximum concentrations were used.

149. General:

An extensive discussion on the sensitive receptors and the exposed population is presented in Appendix Q of the Draft Final RI Report (E.C. Jordan Co., 1990). A brief discussion of sensitive receptors is included on page 13-4.

150. Page 13-1, Paragraph 1:

The phraseology has been changed to reflect the stated observation.

151. Page 13-2, Paragraph 2:

The Region I Risk Assessment Guidance document has been included in the references listed in Paragraph 2.

152. Page 13-3, Paragraph 2:

The text has been modified.

153. Page 13-5, Paragraph 2:

There is no data available (no asb stos was found in soil samples collected on-site) to base a hypothetical exposure to asbestos. Any attempt to determine future exposures would be a purely academic exercise. If the EPA determines that an assessment of exposure to asbestos must be performed, ABB-ES will perform the assessment with Region I guidance on what scenario and assumed exposure concentration to use.

154. Page 13-5, Paragraph 2:

The word "approximately" has been inserted prior to depths to groundwater.

155. Page 13-7, Paragraph 3:

Although the fire training area is remote from base housing, nonetheless, ABB-ES performed a residential exposure scenario to soils. The performance of the residential risk assessment nullifies this comment.

156. Page 13-8, Paragraph 2:

The detection of low level pesticides has been included in the discussion of surface soil contaminants.

157. Page 13-8, Paragraph 2:

The discussion has been modified to include non-carcinogenic PAH compounds detected in soils.

158. Pag 13-9, Toxicity Ass ssment:

A table listing the information requested is provided in Appendix O.

159. Page 13-9, Asbestos

Refer to the response for Comment 153.

160. Page 13-11, Paragraph 3:

The documented use of the fire training area was 6 times per year, a realistic number of exposures. It would also be considered conservative due to the fact that the training area was used 6 times per year by different base personnel (i.e., once a person is trained, it is unlikely repeat training will occur more than once a year.) However, the worker scenario has been omitted and the future residential land use scenario is used to estimate potential risk at Site 11.

161. Page 13-11, Paragraph 3:

The risk summary for the FTA has been modified based on the future residential scenario. Reference to incremental carcinogenic risk has been made.

162. Page 13-12, Last Sentence:

The text has been modified to reflect this change.

163. Pag 13-13, Table 13-3:

Table 13-3 has been omitted and the future residential scenario developed for the FTA is consistent with the residential scenario used at Site 12.

164. Page 13-14, Paragraph 1:

A discussion of the potential impacts of the Eastern Plume to the tidal area has been included.

165. Page 13-14 (this was 13-4 on original, assuming typo), Paragraph 2:

A brief reference to groundwater has been included in the summary. The potential risks from exposure to contaminated groundwater are addressed in the 1990 E.C. Jordan Co. Draft RI report.

166. Table O-2:

The RfD for lead has been corrected.

167. Table O-2:

The toxicity information for PAHs has been added to th table.

168. Tables O-3 through O-8:

The format and exposur parameters for these tabl s are changed to match those for O-9 through O-12.

169. Tables O-3, O-5, and O-7:

Noncarcinogenic PAHs will be assessed using the toxicity information for naphthalene.

170. Tables O-7 and O-8:

The 0.1 g/event ingestion rate has been adopted.

171. Residential Exposure Scenarios

The residential exposure scenarios used in Tables O-9 through O-12 will be used for Site 11 (Tables O-5 through O-8).

APPENDIX N - SOLUTE TRANSPORT MODELING

172. Page N-1: The Appendix is modified as requested.

UNITED STATES ENVIRONMENTAL PROTECTION AGENCY
REGION I
J.F. KENNEDY FEDERAL BUILDING, BOSTON, MASSACHUSETTS 02203-2211

June 19, 1991

Mr. James Shafer (Code 1421)
Northern Division
Naval Facilities Engineering
Command
U.S. Naval Base, Bldg. 77 Low
Philadelphia, PA 19112-5094

Subj: Additional EPA Comments
Supplemental RI Report
Naval Air Station Brunswick
Brunswick, Maine

Dear Mr. Shafer:

The United States Environmental Protection Agency (EPA) has completed its review of the document entitled "Draft Supplemental Remedial Investigation Report (RI)" dated April 1991, for the Naval Air Station Brunswick in Brunswick, Maine. The attached comments are in addition to EPA comments forwarded to the Navy on May 30, 1991.

EPA requests that the Navy submit a comment by comment response, as well as incorporate the necessary changes into the Draft Final Supplemental RI Report. As outlined in Section 6.7(e) of the Federal Facility Agreement (FFA), the Draft Final Supplemental RI Report will be due within 45 days of the close of the comment period. Therefore, the Draft Final Supplemental RI Report will be due no later than August 5, 1991.

If you have any questions regarding the enclosed comments or would like to discuss the comments further, please contact me at (617)573-5785.

Sincerely,

Meghan F. Cassidy

Meghan F. Cassidy
Remedial Project Manager

Enclosures

cc: Eileen Curry/NASB
Mel Dickenson/E.C. Jordan
Ted Wolfe/ME DEP
Ann Johnson/SAIC
Mary Jane O'Donnell/US EPA
Richard Willey/US EPA
Bob DiBiccaro/US EPA


PRINTED ON RECYCLED PAPER

## ATTACHMENT I

The following comments pertain to the document entitled "Draft Supplemental Remedial Investigation (RI) Report" dated April 1991. The report was submitted by the U.S. Department of the Navy for the Naval Air Station Brunswick in Brunswick, Maine. The report was prepared for the Navy by E.C. Jordan.

1. Figure 8-12: The groundwater flow direction arrows shown are not normal to groundwater contours in all cases. Re-evaluate the construction of the flow arrows.

2. Figure 8-12: The contours on this figure appear to indicate that leakage occurs from Picnic Area Pond to the east. Re-examine the contours in this area as presented and discuss this phenomena.

3. Figure 8-12: Discuss, and if possible interpolate contours, how groundwater flow at Sites 6, 9 and 11 is related.

4. Additional cross-sections should be constructed which include data from source areas, particularly Site 11.

5. Computer modeling used in developing alternatives for the Eastern Plume should include an effort to show how Sites 1 and 3, and the Eastern Plume are hydraulically connected. This effort should also project long-term impacts of remedial activities at each of the sites will effect the other site.

6. A figure should be developed which plots concentrations throughout the Eastern Plume as elevations.

7. Figure 8-18: Clarify whether this figure represents the saturated thickness above the clay unit.

8. Figure 8-19: According to this figure, groundwater sampled at CP-144 and CP-145 both contained 1,1-dichloroethane at depths of 15 and 24 feet, respectively. Provide a discussion regarding why these contaminant hits were not considered to represent part of the eastern plume. If these locations are not considered to be representative of the eastern plume, provide a discussion regarding what the source of this contamination may be.

9. Figure 8-19: Provide a discussion which explains why contamination at the southern most extent of the eastern plume (CP-118), as shown on this figure, is limited to trichloroethane only and does not contain the suite of contaminants which is characteristic of the eastern plume farther north. This discussion should also explain why the concentration of trichloroethane at CP-118 is significantly higher and deeper than the closest points within the plume to the north.

10. The report needs significant, detailed discussion regarding the source of contamination as far northeast of Site 11 as CP-157. EPA does not believe that sufficient information has been presented regarding possible sources of this contamination.

11. The boring log from monitoring well MW-302 indicates that the bottom of the exploration was 57 feet below ground surface (bgs) and that the bottom of the well was installed at approximately 50 feet bgs. The last sample taken from this boring indicates that drilling encountered only one foot of clay before boring termination (the second to last sample from 51 to 52 feet contained grey silt and fine sand). Discuss whether this well was sufficiently deep to intercept any groundwater contamination considering that contamination at crossgradient (CP-148) and downgradient (CP-157) sampling locations was detected at depths ranging from 64 to 75 feet.

12. Stiff diagrams should be developed using data presented on Figure 8-21.

**ATTACHMENT 1 (JUNE 19,1991)**

1. Figure 8-12: A review of Figure 8-12 (new Figure 8-13) indicates that flow direction arrows are generally drawn perpendicular to groundwater surface contours. The figure will remain unchanged.

2. Figure 8-12 (new Figure 8-13): The surface water elevations observed at the Picnic Area Pond, which are a reflection of the groundwater surface elevations, were incorporated into the groundwater surface contour map. The groundwater surface contours do indicate that a portion of the groundwater flow discharges to the Picnic Area pond.

3. Figure 8-12 (new Figure 8-13): Groundwater that occurs in the vicinity of Sites 6, 9, and 11 is interpreted to flow within the same groundwater flow system. Groundwater from the Sites 11 area appears to flow towards Site 9 and is expected to discharge to the tributary located between Site 9 and Site 11. Site 6 is interpreted to be cross-gradient to Site 11 and downgradient to groundwater flow at Site 9.

4. An additional cross section is constructed of the Site 11 area.

JHW079103.021

5. Computer modeling utiliz d in the development of alternatives for the eastern plume included the Sites 1 and 3 area. Th impact of specific remedial alternative actions developed for the Sites 1 & 3 areas on the eastern plume area were not evaluated as part of the eastern plume modeling effort. Based on an evaluation of the Sites 1 & 3 numerical modeling of remedial alternatives, hydrologic impact to the eastern plume area is expected to be minimal.

6. Figures showing VOC concentrations at elevations -20 and -30 MSL are included in the RI Report. A figure showing concentrations at -40 elevation is also included in th July 1990 FS Report. Figures 8-25 to 8-29 (new Figures 8-26 to 8-30) also show VOCs along vertical profiles at the site. This data is considered sufficient to understand the vertical distribution of VOCs with depth.

7. Figure 8-18 (now numbered 8-19): This figure represents the saturated thickness above the clay unit. A note stating this is included in the figure.

8. Figure 8-19 (now numbered 8-20): A discussion of CP-144 and CP-145 is included.

9. Figure 8-19: A discussion of CP-118 is included.

JHW079103.021

10. Mor discussion of th contamination to th northeast of Site 11 is provided.

11. MW-302 is located along the western limb of the clay trough. The well is screened in transition soils several feet above the clay and VOCs were not detected. Contamination at CP-148 and CP-157 is deeper due to the fact that the trough has become deeper to the east. Groundwater at CP-148 is not cross-gradient to MW-302, it is more downgradient. CP-148 is directly downgradient of CP-147 which did not detect VOCs. Thus it is believed that the northeastern most VOC contamination from Site 11 occurs between CP-147 and CP-148, indicating that MW-302 should not have Site 11 related VOC contamination.

12. Since inorganics are not part of the Eastern Plume contamination it is not clear why stiff diagrams are appropriate. The EPA should supply a rationale for th stiff diagrams if it feels that they are necessary.

STATE OF MAINE
# Department of Environmental Protection

MAIN OFFICE: RAY BUILDING HOSPITAL STREET AUGUSTA
MAIL ADDRESS: State House Station 17, Augusta, 04333
207 287-7688

JOHN R. McKERNAN, JR.
GOVERNOR

DEAN C. MARRIOTT
COMMISSIONER

May 23, 1991

Mr. James Shafer
Department of the Navy, Northern Division
Naval Facilities Engineering Command
Building 77-L
Philadelphia Naval Shipyard
Philadelphia, PA 19112-5094

RE: Naval Air Station Brunswick, Draft Supplemental RI Report, April, 1991, by E.C. Jordan Co.

Dear Mr. Shafer:

The Maine Department of Environmental Protection (MEDEP) has completed its review of the Draft Supplemental RI Report. This report was submitted to the MEDEP by E.C. Jordan Co. on April 16, 1991 on behalf of the U.S. Department of the Navy for the Naval Air Station Brunswick (NASB) Site.

The MEDEP concurs with the conclusions summarized in Section 12 of this draft document however, the MEDEP requests that the following comments be addressed and/or considered for revision in the Final Draft Supplemental RI Report. These changes will allow for clarification of some specific issues.

General Comments Draft Supplemental RI Report:

State ARAR's relating to MEDEP Solid Waste Management Regulations, Chapters 400-405 for asbestos should also be included in Table 2-5 as were other potential action-specific State ARAR's. ARAR's pertaining to asbestos that the MEDEP deems important were noted in Appendix A.

Discussions of DNAPLS at Site 11 appeared to imply that DNAPLS do not occur in a continuous phase in the pore system as a pool on bedrock or some other aquitard. Therefore, the extraction of free phase DNAPL is impossible. The MEDEP believes that it is highly likely that DNAPL occurs as residual in the vadose zone, the capillary fringe and potentially below the water table



REGIONAL OFFICES
• Portland • • Bangor • • Presque Isle •

Specific Comments:

| Page | Comment |
|---|---|
| ES-6: | No records are available indicating that the MEDEP supervised or concurred with the closure of Site 5 cited by R.F. Weston (1983). |
| ES-6, 7: | The statement that there is no risk at these sites is misleading. Left as is, the sites may currently pose no risk however, any disturbance to the site could result in exposure to the buried asbestos material. As part of any decision regarding remedial alternatives, it is advisable to place a deed restriction on these sites limiting their future use and warning any future owner of the potential hazards. |
| 2-7, 21: | Table 2-1 and 2-5 discusses Maine Ambient Air Quality Standards (Chapter 110). Specific contaminants such as chromium, lead, hydrocarbons, and photochemical oxidants should be identified as being covered by this ARAR. |
| 3-38: | Cross sectional diagrams of stream profiles were not included in Appendix K. Add this information to the data package. |
| 4-8: | MEDEP regulations in effect at the time of the closure of the Site 5 Asbestos Landfill cited by R.F. Weston (1983), required 2 feet of cover with allowances for a possible variance of less than 2 feet. Review of R.F. Weston's IAS report provided no additional information regarding State guidance provided in this reported closure. A search of MEDEP files failed to located any documentation pertaining to this action. Please provide the MEDEP with any historical documentation regarding possible variances granted or of supervision by the State during the closure operation. If documentation cannot be located, proper closure of Site 5 will be required under Current MEDEP Solid Waste Management Regulations. |
| 6-5: | The interpretation of the pump test at the Jordan Avenue well field must be accompanied by rainfall and barometric pressure data. |
| 8-2: | Line 4 should read "Prior to the <u>1990</u> Field Program...". |

8-7: The sand-rich zone within the transition unit is not well defined. Describe how it is related to the upper brown sand unit. Identify if there is a genetic relationship between the sand units. Describe the depositional framework which links these two sands. On Figs. 8-3 to 8-7 the sand rich zones are sometimes labeled as sand (Figs. 8-4, 8-5, & 8-8) and sometimes marked as transition (Figs. 8-3, 8-6, & 8-7).

8-21: Table 8-1 does not show discharge results as described in the text on page 8-18.

8-30: Fig. 8-11 is on page 8-34, not in the back of the document as stated in the text on line 7.

Fig. 8-16: The equipotential lines are poorly drawn on the southern ends of the flownet. In particular, the 23 foot line is out of place. A 23 foot line, by itself, cannot be drawn between a 20 foot line and a 22 foot line. Please review and correct this figure.

Fig. 8-17: The equipotential lines on the southern end of the flownet have been poorly drawn. There is no 20 foot line between the 18 and 22 foot equipotentials in some areas. The flownet may be more accurate if the 20 foot line to the right of MW 229 were drawn in a downward direction rather than continuing towards the right towards MW 318. The flownet needs to be reexamined and corrected.

8-92: The statement that the bedrock occurs above the clay layer is misleading. The bedrock does not overlie the clay. The clay layer pinches out against the bedrock.

13-12: Risks ranging from $2x10^{-6}$ to $2.5x10^{-6}$ appear to be carcinogenic risks not "noncarcinogenic" risks as stated on line 5.

13-13: A lifetime residential exposure should be calculated for Site 11.

If you have any concerns or questions regarding these comments, please contact me at (207) 289-2651.

Sincerely,

Ted Wolfe

Ted Wolfe
Division of Licensing and Enforcement
Bureau of Oil and Hazardous Materials Control

cc: Mike Barden, MEDEP
Meghan Cassidy, US EPA
Eileen Curry, NASB
Mel Dickinson, E.C. Jordan/ABB Environmental
Donald Gerrish, Town of Brunswick
Bruce Hunter, MEDEP
Loukie Lofchie, BACSE
Denise Messier, ME DEP
Susan Weddle, Citizen Representative

A:NASBSPRI

P. O. Box 297
Brunswick, ME 04011
May 1, 1991

Captain H. M. Wilson
Commanding Officer
Naval Air Station Brunswick
Brunswick, ME 04011-5000

Re: Comments on Draft Supplemental RI Report.

Dear Captain Wilson:

I have relatively few comments on this draft.

- Concerning Site 14. If the material at Old Dump #3 was moved, are there any thoughts as to where that material is now? It seems likely that it is on the Base somewhere.

- Site 8. As I noted in our last meeting, and speaking as one who is not a hydrologist: There is nothing in this report to suggest any connection between the Site 8 wells and the Pumping Station. Neither is the argument that there is no connection (developed by the pumping experiments) very convincing.

- Site 8. Where is there discussion of the Vinyl chloride and 1,2-dichloroethene reported at MW906?

Sincerely,

S. S. Butcher

Samuel S. Butcher

cc: James Shafer

## TRC SRI COMMENTS
## Dr. Samuel S. Butcher

1. Site 14: If the material were removed from the Old Dump # 3 it would probably have been moved to the active base dump at the time. The active dump during the time period of runway construction was Site 2.

2. Site 8: The data presented in Section 6.2 indicate that there is no hydraulic connection between Site 8 and the Jordan Avenue wellfield. If there were a connection some consistent drawdown would have been observed.

3. Site 8: The vinyl chloride and 1,2-dichloroethene reported in the table are for Site 9.

## DEP COMMENTS

1. Page ES-6: The records concerning Site 5 have been found and are included in Appendices in the FS Report.

2. Page ES-6,7: Land Restrictions will be included in the potential FS alternatives.

3. Page 2-7, 21: These compounds are included in the ARAR discussion.

4. Page 3-38: Cross sectional diagrams of stream profiles are not included in Appendix K, although all data measurements are presented in the tables. These tables present all the data which would be included in cross section diagrams.

5. Page 4-8: Information concerning Site 5 closure has b en forwarded to the MEDEP.

6. Page 6-5: Rainfall and barometric pressure data are incorporated in the discussion of the Jordan Avenue Pump test.

7. Page 8-2: Text is changed.

JHW079103.021

8. 8-7: The figures mention d are relabeled for consistency. Sandy or sand-rich zones above the Presumpscot Clay are related to higher energy regimes than the finer-grained sediments. As depicted in Figure 8-6, the sands of the upper unit as well as those found to the western portions of the Eastern Plume, are the same, and are part of a regressive depositional environment. The shaded areas on Figures 8-3 through 8-7 represent sandy areas that can be continuous or inter-fingered with finer-grained sediments.

9. Page 8-21: Discharge results are discussed in the text. Table 8-1 is removed form the document.

10. Page 8-30: The Figure 8-11 reference is corrected.

11. Page 8-16: A 23-foot equipotential line can be drawn as shown in this figure if a groundwater divide is interpret d to exist in this area of the site, which is the case. Equipotential lines are based on water level data at specific wells and an overall understanding of the site hydrogeology. A note stating this is included on this figure.

12. Page 8-17: The figure is corrected.

13. Page 8-92: The statement is reworded for clarification.

JHW079103.021

14. Page 13-12: The appropriate risk is ref renced.

15. Page 13-13: A future residential exposure has been calculated for Site 11.

JHW079103.021