N60087.AR.002180
NAS BRUNSWICK
5090.3a

FINAL EXTRACTION WELL EW-05B INSTALLATION COMPLETION REPORT FOR EASTERN PLUME WITH TRANSMITTAL LETTER NAS BRUNSWICK ME
1/15/2010
ECC

LETTER OF TRANSMITTAL

ECC
33 Boston Post Road West
Suite 340
Marlborough, MA 01752
Tel: (508) 229-2270
Fax: (508) 229-7737

TO: U.S. Department of Navy

BRAC PMO Northeast

4911 South Broad Street

Philiadephia, PA 19112-1303

DATE: 15 JANUARY 2010	JOB NO.: 5700.007
ATTENTION: Todd Bober, RPM and Paul Burgio, BEC	
RE: Final Extraction Well EW-05B Installation Completion Report	
Eastern Plume, Naval Air Station Brunswick, Maine	

WE ARE SENDING YOU [X] Attached [ ] Under separate cover via _____ the following items:

[ ] Shop drawings [ ] Prints [ ] Plans [ ] Samples [ ] Specifications

[ ] Copy of letter [ ] Change order [ ] _____

COPIES	DATE	DESCRIPTION
1	January 2010	FINAL EXTRACTION WELL EW-05B INSTALLATION COMPLETION REPORT, EASTERN PLUME, NAVAL AIR STATION BRUNSWICK, MAINE

THESE ARE TRANSMITTED as checked below:

[ ] For approval [ ] Approved as submitted [ ] Resubmit _____ copies for approval

[X] For your use [ ] Approved as noted [ ] Submit _____ copies for distribution

[ ] As requested [ ] Returned for corrections [ ] Return _____ corrected prints

[ ] For review and comment [ ] _____

[ ] FOR BIDS DUE _____ [ ] PRINTS RETURNED AFTER LOAN TO US

REMARKS: For your reference/use.

COPY TO:
C. Sait and C. Evans, MEDEP (2)
M. Daly, EPA (1)
C. Lepage, Lepage Environmental (1)
D. McTigue, Gannet Flemming (1)
L. Joy and M. Fagan, NASB (1)
J. Wright, B. Capito, NAVFAC (2)
L. Klink, J. Orient, TtNUS (2)
C. Race, TtNUS (1)
C. Guido, R. Phinney, ECC (2)
J. Fullerton, Curtis Memorial Library (1)

SIGNED Gina Calderone CPG, PG
Titles Project Manager/Hydrogeologist

Al Easterday, PG
Sr. Project Manager

If enclosures are not as noted, kindly notify us at once.

DEPARTMENT OF THE NAVY
BASE REALIGNMENT AND CLOSURE
PROGRAM MANAGEMENT OFFICE, NORTHEAST
4911 SOUTH BROAD STREET
PHILADELPHIA, PA 19112-1303

BPMO NE/TB
Ser 10-054
January 15, 2010

Mr. Michael J. Daly
Remedial Project Manager
OSRR07-3
U.S. Environmental Protection Agency Region I
5 Post Office Square, Suite 100
Boston, MA 02109-3912

Ms. Claudia Sait
Remedial Project Manager
Maine Department of Environmental Protection (MEDEP)
Bureau of Remediation and Waste Management
17 State House Station
Augusta, ME 04333-0017

Dear Mr. Daly and Ms. Sait:

Enclosed you will find the Final Extraction Well EW-05B Installation Completion Report, Eastern Plume, Naval Air Station (NAS) Brunswick, Maine. This report is provided for your use/reference.

If you have any questions or comments, please contact the Navy's Remedial Project Manager, Todd Bober at (215) 897-4911.

Sincerely,

Paul F. Burgio

Paul F. Burgio
BRAC Environmental Coordinator
By direction of BRAC PMO

Enclosure:
Final Extraction Well EW-05B Installation Completion Report, Eastern Plume, NAS Brunswick, Maine

Copy to:
MEDEP (C. Evans)
NASB (L. Joy, M. Fagan)
Gannet-Fleming (D. McTigue)
Lepage Environmental (C. Lepage)
NAVFAC MIDLANT (T. Bober)
NAVFAC ATLANTIC (J. Wright, B. Capito)
TtNUS (L. Klink, C. Race, J. Orient)
ECC (A. Easterday, G. Calderone, C. Guido, R. Phinney, J. Kiker, G. Mendez)
Curtis Memorial Library (J. Fullerton)

Copy to: (w/o encl)
BRAC PMO NE (P. Burgio)
NAVFAC ATLANTIC (D. Barclift)
BACSE (E. Benedikt, C. Warren)
CO NASB (CAPT Fitzgerald)
RAB Brunswick Representative (S. Johnson)
RAB Harpswell Representative (D. Chipman)
RAB Topsham Representative (S. Libby)
MRRA (V. Boundy)

FINAL

EXTRACTION WELL EW-05B INSTALLATION COMPLETION REPORT EASTERN PLUME

Naval Air Station
Brunswick, Maine

Prepared for

Department of the Navy
Naval Facilities Engineering Command
BRAC Program Management Office - Northeast
4911 South Broad Street
Philadelphia, Pennsylvania 19112-1303

Contract No. N62472-02-D-0810
Contract Task Order No. 007

January 2010

Prepared by

ECC
33 Boston Post Road West, Suite 340
Marlborough, MA 01752

FINAL

EXTRACTION WELL EW-05B INSTALLATION COMPLETION REPORT EASTERN PLUME

Naval Air Station
Brunswick, Maine

Prepared for

Department of the Navy
Naval Facilities Engineering Command
BRAC Program Management Office - Northeast
4911 South Broad Street
Philadelphia, Pennsylvania 19112-1303

Jeff Donovan — 1/14/10 — Date
Jeff Donovan
Environmental Scientist

Alexander Easterday — 1/14/10 — Date
Alexander Easterday P.G
Senior Project Manager

QUALITY REVIEW STATEMENT

Contract No. N62472-02-D-0810 ECC Project No.: 5700.007
Contract Task Order No. 007
Activity: Naval Air Station Brunswick, Maine

Description of Report/Deliverable:

Extraction Well EW-05B Installation Completion Report, Eastern Plume, January 2010, Naval Air Station Brunswick, Maine

ECC CTO Manager: Alexander C. Easterday, P.G.

As per State of Maine Department of Professional and Financial Regulations, Title 32 Chapter 73, Law, the sections of this document related to geology and geologic data interpretation have been reviewed for its technical content by the undersigned State of Maine Certified Geologist.

This document has been reviewed by the undersigned for their geological interpretive content. This statement is based upon the review of the undersigned conducted during the preparation of this report, as dated below.

Certified Professional Geologist Reviewer

STATE OF MAINE
GINA M. CALDERONE
No. GE442
CERTIFIED GEOLOGIST

Gina M. Calderone

1/14/10

Gina M. Calderone, P.G., C.P.G. Date
State of Maine Certified Professional Geologist (No. GE442)

CONTENTS

Page

LIST OF FIGURES
LIST OF TABLES

1.0 INTRODUCTION 1

1.1 Organization 1

1.2 Site Background 1
1.2.1 Previous Investigations 2
1.2.2 USEPA Geophysical Investigation 2
1.2.3 EA Investigation 3

1.3 Deviations from the Final Work Plan 3

2.0 FIELD ACTIVITIES AND METHODS 4

2.1 Extraction Well Installation and Development 4
2.1.1 Drilling Method and Equipment 4
2.1.2 Soil Sampling 5
2.1.3 Well Screen and Riser 5
2.1.4 Filter Pack, Bentonite Seal, Grout 5
2.1.5 Well Development 5

2.2 Piezometer Installation and Development 6
2.2.1 Drilling Method and Equipment 7
2.2.2 Soil Sampling 7
2.2.3 Well Screen and Riser 7
2.2.4 Filter Pack, Bentonite, Grout 7
2.2.5 Surface Completion 8
2.2.6 Piezometer Development 8

2.3 Investigation Derived Waste 8
2.3.1 Extraction Well Investigation Derived Waste 8
2.3.2 Piezometer Installation Investigation Derived Waste 9

2.4 Extraction Well Performance Testing and Sampling 9
2.4.1 Extraction Well Performance Testing Investigation Derived Waste 10

2.5 Connection to Groundwater Treatment System 10
2.5.1 Concrete Vault and Electrical Pull Box 11
2.5.2 Excavation, Trenching, and Piping 11
2.5.3 Hydrostatic Pressure Test 12

2.5.4 Electrical Pull Box and Electrical Conduits 12
2.5.5 Backfilling and Site Restoration 12
2.5.6 Submersible Pump Installation 13
2.5.7 Electrical Connections 13
2.5.8 Connection to Groundwater Discharge Line 13

2.6 Surveying 14

3.0 REFERENCES 15

APPENDIX A: RESPONSES TO COMMENTS AND CONCURRENCE LETTERS
APPENDIX B: BORING LOGS
APPENDIX C: EW-05B AND PIEZOMETER CONSTRUCTION DIAGRAMS
APPENDIX D: WELL DEVELOPMENT LOGS
APPENDIX E: IDW ANALYTICAL DATA AND WASTE PROFILE FORMS
APPENDIX F: SURVEY DATA
APPENDIX G: SITE PHOTOS

LIST OF FIGURES

Figure 1 – Site Location Map, Eastern Plume

Figure 2 – Geophysical Survey 2003, Eastern Plume

Figure 3 – Locations of Borings 2005, Eastern Plume

Figure 4 – Location of Extraction Well EW-05B within Eastern Plume

Figure 5 – Location of Extraction Well/Piezometers/Stream Gauges, Eastern Plume

Figure 6 – EW-05B Trenching Route, Eastern Plume

LIST OF TABLES

Table 1 – Direct-Push Groundwater Samples Collected June 2005

1.0 INTRODUCTION

Under Contract No. N62472-02-D-0810, Engineering Field Activity Northeast, Naval Facilities Engineering Command, issued Contract Task Order No. 007 to ECC to install a groundwater extraction well at the Eastern Plume at Naval Air Station (NAS) Brunswick, Maine, to address elevated levels of chlorinated volatile organic compounds (VOCs) in site groundwater. This completion report documents the results of the field activities associated with the installation and operation of extraction well (EW) EW-05B within the Eastern Plume.

Field activities associated with the installation of EW-05B were conducted in four phases: (1) the installation and development of EW-05B and four associated piezometers; (2) a performance test to gauge well performance and the hydrogeologic properties of the aquifer; (3) the installation of the protective concrete vault around the well along with associated trenching and piping; and (4) the installation of the submersible pump and associated electrical connections. Extraction well EW-05B was installed and developed in July 2007. The results from the performance testing and sampling of EW-05B were reported in the Final Letter Summary Report, Performance Testing and Groundwater Sampling, Extraction Well EW-05B, prepared by ECC (ECC 2009). The excavation, trenching, and piping activities began in July 2009. Installation of the submersible pump and the electrical connections was completed in September 2009. These activities are detailed herein.

1.1 ORGANIZATION

This completion report details the field activities that were conducted during installation of extraction well EW-05B. Section 1.0 contains the introduction, report organization, provides site background information, and summarizes previous investigations pertinent to the installation of EW-05B. Field activities and procedures specific to the extraction well installation are detailed Section 2.0. References are provided in Section 3.0. Responses to regulator comments and concurrence letters on the draft completion report are provided in Appendix A. Soil boring logs are provided in Appendix B. Appendix C provides piezometer and EW-05B construction diagrams. Appendix D provides well development logs. Analytical results from investigation-derived waste (IDW) sampling and waste profile forms are provided in Appendix E. Survey data are presented in Appendix F and site photos are presented in Appendix G.

1.2 SITE BACKGROUND

NAS Brunswick is located south of the Androscoggen River between Brunswick and Bath, Maine, as shown on Figure 1. NAS Brunswick is an active base owned and operated by the Federal government through the Department of the Navy. In 1987, NAS Brunswick was placed on the National Priorities List (NPL) by the United States Environmental Protection Agency (USEPA) and is currently participating in the Navy's Installation Restoration Program. In 2005, NAS Brunswick was included in the Department of Defense (DoD) Base Re-Alignment and Closure (BRAC) list of facilities to be closed. The base will continue to operate until 2011.

The Eastern Plume is the groundwater contamination resulting from three sites: Site 4 Acid Caustic Pit, Site 11 Fire Training Area, and Site 13 Defense Reuse and Marketing Office. The

Eastern Plume is identified as Operable Units 2 and 5 and is located within the central portion of NAS Brunswick. The Eastern Plume has been attributed to past solvent disposal practices from Site 4, Site 11, and Site 13, which leached into groundwater. The dissolved-phase plume associated with these disposal activities was found to consist primarily of VOCs. Significant potentiometric head and artesian conditions in the lower sand have been noted, indicating that the groundwater flow within the lower sand is confined by underlying and overlying clay and silt. Groundwater potentiometric surface maps indicate that groundwater flow potential in the transition unit is to the south-southeast. Actual groundwater flow within the transition unit may be limited by thinning of the sand intervals to the east and south.

A groundwater extraction and treatment system (GWETS), currently consisting of four active extraction wells connected to a groundwater treatment plant, has been in operation since June 1995. The location of the Eastern Plume is shown on Figure 1.

1.2.1 Previous Investigations

Two field investigations that pertain to the installation of EW-05B were conducted at the northern portion of the Eastern Plume in 2003 and 2005. The first investigation was conducted in September 2003 by Gannett Fleming Inc. (GF) under contract with the USEPA. GF conducted a geophysical investigation with the purpose of mapping the bedrock surface and identifying key stratigraphic zones within Site 11 and areas downgradient of Site 11. Training activities at Site 11, covering almost four decades, resulted in chlorinated VOCs migrating to groundwater.

The second investigation was conducted in June 2005 by EA Engineering, Science, and Technology, Inc. (EA). The objective of this investigation was to determine the optimal location for the installation of an extraction well. These investigations are summarized in the following subsections.

1.2.2 USEPA Geophysical Investigation

In September 2003, Hager GeoScience Inc. was subcontracted by Gannett Fleming (under contract to the USEPA) to perform a geophysical investigation at NAS Brunswick. The primary objectives of the investigation were to map the bedrock surface, ground-truth photo-lineaments, and identify other possible fracture zones within Site 11 and downgradient areas. Secondary objectives included mapping key stratigraphic horizons. These investigations were performed to better understand possible migration pathways in bedrock fractures and deeper stratigraphic zones whose geometries may be controlled by bedrock morphology.

Between 22 September and 6 October 2003, ground-penetrating radar (GPR) was used in conjunction with borehole and cone penetrometer probe information to form a database of approximately one thousand data points. This database was used to create models of the bedrock, clay, and transition unit surfaces. In summary, a bedrock trough defines a small subsurface valley system sloping to the north near monitoring well (MW) MW-308. Within the valley the Presumpscot clay was deposited, and melt water streams flowing eastward formed a pro-grading delta deposit. Subsequent erosion in the form of a north-sloping drainage system can be seen in the clay, and to a lesser extent, in the transition sediments. The results of the geophysical survey are shown in Figure 2.

1.2.3 EA Investigation

Between 21 and 24 June 2005, EA conducted an investigation at the Eastern Plume to provide geologic information and groundwater concentration data to support placement of additional extraction wells. Five soil borings (EP-LOG -01, EP-LOG-02, EP-LOG-03, EP-LOG-04, and EP-LOG-05) were advanced to bedrock, and subsequent soil and groundwater samples were collected. Soil borings were advanced continuously from ground surface to approximately 1 foot into bedrock. Depth to bedrock varied from 90 feet (ft) bgs (below ground surface) at EP-LOG-2 to 145 ft bgs at EP-LOG-4. The Presumpscot clay was encountered in all of the borings, varying in depth between 61 ft bgs (EP-LOG-2) to 87 ft bgs (EP-LOG-4), with a thickness ranging from 23.5 ft in EP-LOG-05, to 56 ft in EP-LOG-03. The boring locations are shown on Figure 3.

Discrete interval groundwater samples were collected from the rotosonic borings and analyzed for VOCs by USEPA Method 8260B. Groundwater samples collected from boring EP-LOG-03 just above the clay surface identified a total VOC concentration of 4,405 ug/L (micrograms per liter). This total consisted of 1,1,1-TCA (1,1,1-trichloroethane) at 2,810 ug/L, 1,1-DCE (1,1-dichloroethene) at 515 ug/L, and TCE (trichloroethylene) at 1,080 ug/L. Results indicated that the plume was migrating southward and that this area of the Eastern Plume would benefit from a focused mass removal effort by the installation of an extraction well at the location of boring EP-LOG-03. Groundwater sampling intervals, which reported the highest concentration of total VOCs from each boring, are summarized in Table 1. The final location and screened interval for EW-05B was determined based on these results. For a complete summary of sample results from all sampled intervals for each boring, please refer to Table 1 as presented in the Summary of Rotosonic and Direct-Push Groundwater Sampling for Five Rotosonic Borings at the Eastern Plume Completed in June 2005 (EA 2005), and in the final extraction well installation work plan (ECC 2007).

1.3 DEVIATIONS FROM THE FINAL WORK PLAN

Deviations from the final work plan (ECC 2007) are summarized below. Stakeholders approved all deviations from the final work plan prior to implementation.

- Based on observations made during drilling activities (fine sands and silt in the drill cuttings), the well screen was installed with a 0.010 slot size instead of a 0.020 slot size, as called for in the final work plan.
- The filter sand pack was extended to 5 ft above the top of the screen instead of 2 ft, as called for in the final work plan.
- The bentonite seal was extended to 4 ft above the top of the filter sand pack instead of 2 ft, as called for in the final work plan.
- Two feet of filter sand were placed in the bottom of the boring prior to well installation instead of 1 ft, as called for in the final work plan.

2.0 FIELD ACTIVITIES AND METHODS

Field activities associated with the installation of EW-05B were conducted in four phases. These phases included the installation and development of EW-05B and four associated piezometers; a performance test to gauge well performance and the hydrogeologic properties of the aquifer; the installation of the protective concrete vault around the well along with associated trenching and piping; and the installation of the submersible pump and associated electrical connections. The following subsections summarize the field activities and methods used in the completion of EW-05B. The time-line for the activities detailed in this section is summarized below.

Activity	Completion Date (Month/Year)
Installation and Development of EW-05B	July 2007
Performance Testing of EW-05B	November 2008
Installation of Concrete Vault	July 2009
Trenching and Piping for EW-05B to EW-05A	July 2009
Installation of Submersible Pump and Electrical Connections	September 2009
On-Line Operation Date	September 2009

2.1 EXTRACTION WELL INSTALLATION AND DEVELOPMENT

Installation and development of EW-05B was completed by DL Maher Company, of Ayer, Massachusetts, under subcontract to ECC and under the supervision of an ECC field geologist. The location of EW-05B was determined from information (archived photos and information obtained from the geologist on-site during the June 2005 EA investigation) obtained during the EA investigation. Installation began on 11 July 2007 and was completed on 16 July 2007. Well development was conducted on 23 and 24 July 2007. The location of EW-05B within the Eastern Plume is shown on Figure 4. The boring log (EP-LOG-3) used as a reference during the installation of EW-05B is provided in Appendix B. A construction diagram of EW-05B is provided in Appendix C. The following subsections summarize the installation and development of EW-05B.

2.1.1 Drilling Method and Equipment

A 12-inch diameter borehole was advanced using a Barber® DR24 dual rotary (DR) drill rig. The DR drill rig allowed for the advancement of steel casing while simultaneously continuing with air rotary drilling. The dual rotary rig utilizes a lower rotary drive unit to advance casing through unconsolidated overburden. Rotational forces are effectively transmitted to the casing through power-operated jaws. A patented carbide studded shoe, welded to the bottom casing joint enables the casing to cut its way through the overburden. Casing can be simply rotated and

pulled back out of the hole to set the extraction well screen. A top drive rotary head simultaneously handles a drill string equipped with a down-the-hole hammer or rolling cone rock bit to drill inside or ahead through the casing. The lower rotary drive unit operates independently from the top drive rotary head.

2.1.2 Soil Sampling

Soil sampling was not conducted during the installation of EW-05B. EW-05B was installed within a 10-ft radius of the location of soil boring EP-LOG-03 (EA 2005). Information from the boring log of EP-LOG-03, and the results from the discrete groundwater sampling (as described in Section 1.2.3), were used to determine the depth and screen interval for EW-05B.

2.1.3 Well Screen and Riser

The well screen and riser are comprised of new, 6-inch inner diameter (ID) #304 stainless steel (SS). The screen is a 10 ft wire wound screen with a 0.010-inch slot size and is threaded at each end. A 3 ft stainless steel sump is attached to the bottom of the well screen. The well screen is connected to 6-inch ID #304 SS Schedule 10 riser threaded to facilitate attachment to the well screen. The borehole was advanced to a depth of 80 ft bgs. The well screen was installed from 65 ft bgs to 75 ft bgs.

2.1.4 Filter Pack, Bentonite Seal, Grout

Two feet of No. 00 filter sand were placed in the bottom of the borehole prior to installation of the well. The filter sand pack was extended to 5 ft above the top of the well screen. A 4 ft thick bentonite seal was then placed above the top of the sand pack and hydrated with potable water. The annulus space around the well riser was sealed with a cement-bentonite grout, composed by weight of 10 parts cement (Portland cement, any Type I-V) to one-half part bentonite, with a maximum of 7 gallons of potable water per 94-lb bag of cement. The bentonite was added after the required amount of cement was mixed with water.

Additives or borehole cuttings were not mixed with the grout. Annular seal materials were combined in an aboveground rigid container and mixed onsite to produce a thick, lump-free mixture. The annular seal was placed utilizing a tremie pipe, initially located within 1 ft of the top of the bentonite seal and positioned so as not to erode the bentonite seal during placement. The tremie pipe was placed in the annulus between the protective casing and the riser pipe. Grout was pumped through this pipe to the bottom of the open annulus until a continuous, undiluted column of grout was formed from the top of the bentonite seal to approximately 2-3 ft bgs. The grout was allowed to set for a minimum of 48 hours before the beginning of well development activities.

2.1.5 Well Development

Well development was conducted on 23 and 24 July 2007. The well was developed using a temporary, electric 1.5 horsepower submersible pump. Approximately 2,515 gallons were removed during development (one well volume equaled approximately 117 gallons based on 1.5

gallons per foot calculated prior to the beginning of development). The well was developed at a pumping rate of approximately 10 gallons per minute (gpm).

Development was considered complete when:

- Well water was clear to the unaided eye;
- Sediment thickness in the well was less than one-tenth (0.1) foot;
- A minimum of five times the standing water volume in the well was removed plus five times the volume of water and drilling fluid (if any) lost during drilling and installation of the well.

Temperature, specific conductivity, and pH readings, measured before, twice during, and after development operations, had stabilized. Stabilization is defined as a variation of less than 0.2 pH units, variation of ±1 degree Fahrenheit, and less than a 10 percent change in specific conductance measured between three consecutive readings with one casing volume of water removed between each reading. The final three nephelometric turbidity unit (NTU) readings were 46.1, 22.7, and 22.5 NTUs, respectively. A goal of 50 NTU or less was the objective as detailed in the final work plan. Water quality data was recorded on a Field Record of Well Development form by the ECC field geologist. The water level inside the well casing was continually measured during development using an electronic water level indicator. The well development log for EW-05B is provided in Appendix D.

2.2 PIEZOMETER INSTALLATION AND DEVELOPMENT

Four piezometers were installed in support of EW-05B for hydraulic gradient monitoring and evaluation of aquifer properties. The four piezometers (EW-05B-PZ1, EW-05B-PZ2, EW-05B-PZ3, and EW-05B-PZ4) were installed at distances of approximately 20 ft, 50 ft, 120 ft, and 250 ft, respectively, from the location of EW-05B. Piezometer installation was conducted from 1 to 14 August 2007. Development was conducted on 14 and 15 August 2007. All piezometers were installed and developed by East Coast Explorations of Hallowell, Maine, under subcontract to ECC and under the supervision of the ECC field geologist.

The piezometers were screened above the confining clay layer in the lower sand unit. The piezometers were used to provide measurable drawdown (at least 0.1 foot) during the well performance tests (step-drawdown and constant-rate distance-drawdown tests) and over time during containment performance monitoring. The locations of the piezometers are shown Figure 5. Boring logs are provided in Appendix B. Piezometer construction diagrams are provided in Appendix C.

During the installation of the piezometers, a total of five soil borings were advanced. At the original proposed location of piezometer EW-05B-PZ4, drilling refusal was encountered at 53 ft 6-inches bgs. The target lower sand unit was not observed down to this depth. Therefore, with approval of the stakeholders, the boring location was moved approximately 150 ft west of the original location, the soil boring was advanced to 80 ft bgs (screened interval is 68-78 ft bgs), and the piezometer was installed. The boring logs for both borings are provided in Appendix B. The boring log for the original proposed location is identified as EW-05B-PZ4, the boring log for the actual boring and installed piezometer is identified as EW-05B-PZ4A. For reporting purposes, the installed piezometer is identified as EW-05B-PZ4.

2.2.1 Drilling Method and Equipment

Soil borings for the piezometers were advanced using a CME® Model 550 drill rig using 4-inch ID steel casing along with drive and wash drilling methods. Drill cuttings were handled as investigation-derived waste (see Section 2.3.2).

2.2.2 Soil Sampling

Soil samples were collected continuously at 2-ft intervals from the ground surface to the termination of the boring at each of the piezometer locations. Soil samples were screened in the field using a MiniRae® 2000 photoionization detector (PID) equipped with an 11.7 eV (electron volt) lamp. No readings above background concentrations were recorded during piezometer installation. Soil samples were collected continuously from the ground surface until termination of the boring at each of the piezometer locations. Samples were collected for soil description and characterization only, no soil samples were collected for laboratory analysis. Samples were collected using 2 ft length by 2-inch diameter steel split spoons advanced using a 140-lb drop weight. Upon retrieval, the split spoon was opened and the sample was screened with the PID. Lithologic characteristics of the sample were then recorded on a log of soil boring by the ECC field geologist. Residual soil from the sample intervals was handled as investigation-derived waste (see Section 2.3.2).

2.2.3 Well Screen and Riser

After the borehole had been advanced to completion depth, a 2-inch ID Schedule 40, threaded, flush-jointed PVC riser casing and attached screen was set into the borehole. Piezometers EW-05B-PZ1 and EW-05B-PZ2 were screened at 65-75 ft bgs. EW-05B-PZ3 was screened at 52-62 ft bgs, and EW-05B-PZ4 was screened at 68-78 ft bgs. The piezometers were completed with 10 ft of 2-inch ID Schedule 40 PVC well screen with a 0.010 slot size.

2.2.4 Filter Pack, Bentonite Seal, Grout

The filter pack of each piezometer consists of inert silica sand with a grain size of No. 00. Prior to installing the well screen, a 6-inch bedding of filter pack was placed in the bottom of the hole. The filter pack was extended to approximately 2 ft above the top of the piezometer screen at each location. A 2 ft thick bentonite seal was then placed directly above the filter pack of each piezometer and hydrated with potable water. The bentonite seal was allowed to hydrate for 1 hour prior to grouting the remainder of the borehole.

The annular seal of each piezometer consists of cement-bentonite grout, composed by weight of 10 parts cement (Portland cement, any Type I-V) to one-half part bentonite, with a maximum of 7 gallons of potable water per 94-lb bag of cement. Bentonite was added after the required amount of cement was mixed with water. Additives or borehole cuttings were not mixed with the grout. Annular seal materials were combined in an aboveground rigid container and mixed onsite to produce a thick, lump-free mixture. The annular seal was placed utilizing a tremie pipe, initially located within 1 ft of the top of the bentonite seal. The tremie pipe was placed in the annulus between the protective casing and the riser pipe. Grout was pumped through this pipe to

the bottom of the open annulus until a continuous, undiluted column of grout was formed from the top of the bentonite seal to approximately 2-3 ft bgs.

2.2.5 Surface Completion

Each piezometer was finished with a 4-inch diameter protective steel casing (approximately 2-ft stickup) grouted in place, and completed with a concrete pad and a lockable cap. Each piezometer was capped with an expandable and lockable well cap.

2.2.6 Piezometer Development

All piezometers were developed using a surge block and submersible pump. The piezometers were mechanically surged with a surge block and pumped clear of sediment with a submersible pump. Care was taken during surging to ensure that low pressures within the well casing and screened interval did not cause implosion of the well screen. Surging continued until little or no sediment remained in the well. Following surging, the well was continuously pumped using a submersible pump (i.e., Grundfos® pump). Temperature, pH, specific conductivity, and turbidity were monitored during pumping at a rate of one reading per well casing volume removed. Water quality data was recorded on a Field Record of Well Development form by the ECC field geologist. The groundwater derived from piezometer development was handled as investigation-derived waste (see Section 2.3.2). Piezometer development logs are provided in Appendix D.

2.3 INVESTIGATION-DERIVED WASTE

Investigation-derived waste associated with the installation and development of EW-05B and the associated piezometers consisted of drill cuttings, residual soil from soil sampling activities, well development water, and de-contamination rinsate. The disposal of IDW associated with these activities is summarized in the following subsections.

2.3.1 Extraction Well Installation Investigation-Derived Waste

Investigation-derived waste generated during the installation of EW-05B consisted of drill cuttings, purged well development groundwater, and de-contamination rinsate. All drill cuttings produced during the installation of EW-05B were deposited directly into a lined, 15 cubic yard rolloff container positioned next to the drill rig. Following installation of EW-05B, the drill cuttings were sampled for full Toxicity Characteristic Leaching Procedure (TCLP) analysis for waste characterization, including Diesel Range Organics (DRO) and Total Petroleum Hydrocarbons (TPH). Residual groundwater that was contained in the rolloff was also sampled for Target Compound List (TCL) VOCs, Target Analyte List (TAL) metals, total suspended solids (TSS), pH, and cyanide. All samples were collected on 17 July 2007 and submitted to Northeast Laboratory Services of Waterville, Maine (a Navy certified laboratory) under Chain of Custody (COC) protocol. All IDW groundwater results were non-detect below the laboratory detection limit. All results for IDW solids (drill cuttings) were below applicable Federal and State regulatory standards. Based on these results, on 10 August 2007 the IDW was transported to Ray Labbe and Sons of Bowdinham, Maine, for disposal at their sand and gravel facility. Analytical results from the IDW sampling and waste profile forms are provided in Appendix E.

Investigation-derived waste groundwater generated during development of EW-05B was containerized on-site in portable 500-gallon polyethylene tanks. All development water generated from EW-05B and de-contamination liquids (from steam cleaning of drilling equipment) were disposed of through the GWETS at Building 50.

2.3.2 Piezometer Installation Investigation-Derived Waste

Investigation-derived waste generated during the installation of the piezometers consisted of drill cuttings, residual soil sampling material, purged well development groundwater, and de-contamination rinsate. All drill cuttings and residual sample material were screened with a PID equipped with an 11.7-eV lamp using a static headspace analysis method. No soil cuttings or residual soil sampling material exceeded background levels when screened. Per the approved work plan, all soils from above the water table were not containerized unless headspace readings on the soils exceeded 10 parts per million (ppm). As such, all soil cuttings and residual sample material generated above the water table were spread on the ground in the immediate area of the boring.

All soil cuttings and residual sample material generated below the water table were containerized in U.S. Department of Transportation (DOT)-approved, 55-gallon drums for waste characterization and disposal. On 24 September 2007, a composite soil sample was collected from two drums, which contained the soil cuttings from the piezometer installation. The samples were submitted under COC protocol to Northeast Laboratory Services of Waterville, Maine, for analysis for RCRA (Resource Conservation and Recovery Act) 8 metals, semi-volatile organic compounds (SVOCs) and VOCs. All SVOC and VOC results were non-detect below the laboratory detection limit. Results from the metals analysis were all below applicable Federal and State regulatory standards. On 26 November 2007, the drums were transported under standard Bill of Lading (BOL) as non-hazardous waste by ENPRO Services of Maine, of South Portland, Maine, to their facility for disposal. Analytical results from the IDW sampling and applicable BOLs are provided in Appendix E.

Investigation-derived waste groundwater generated during piezometer development was containerized on-site in 55-gallon DOT-approved sealable drums. All development water generated from EW-05B and de-contamination liquids (from steam cleaning of drilling equipment) were disposed of through the GWETS at Building 50.

2.4 EXTRACTION WELL PERFORMANCE TESTING AND SAMPLING

Following the installation and development of extraction well EW-05B and the associated piezometers, a performance test was conducted on EW-05B to gauge the effectiveness of the well and its pumping limitations.

The performance test consisted of two separate tests; a step-drawdown test (completed on 14 November 2008) followed by a 72 hour constant rate drawdown (pumping) test (conducted from 17 through 20 November 2008). Groundwater elevations were recorded at six monitoring wells/piezometers (EW-05B, EW-05B-PZ-1, EW-05B-PZ-2, EW-05B-PZ-3, EW-05B-PZ-4, and MW-209) during the step-drawdown test, and at seven monitoring wells/piezometers during the pumping test (the above plus piezometer P-106). In addition, one stream gauge (GP-3B) located

to the east of EW-05B was gauged during the performance tests. Results from the performance testing indicate that EW-05B can sustain a pumping rate of approximately 12 gpm.

Results from the performance testing and sampling were reported in the Final Letter Summary Report, Performance Testing and Groundwater Sampling, Extraction Well EW-05B (ECC 2009). Please refer to this document for results of the performance testing and groundwater sampling.

2.4.1 Extraction Well Performance Testing Investigation-Derived Waste

Purged groundwater from the step-drawdown test and the constant rate drawdown test was containerized in 3, 20,000-gallon temporary storage tanks (i.e. Frac tanks), which were located on-site next to EW-05B. Groundwater from the performance testing was discharged directly into the tanks via a 1-inch diameter hose. Approximately 60,000-gallons of water were removed during the performance testing. Following completion of the performance testing, all purged groundwater was removed from the Frac tanks via vacuum tank trucks and transported under straight BOL as non-hazardous waste to Clean Harbors Environmental Services treatment facility located at 37 Rummery Road, South Portland, Maine, for proper disposal.

2.5 CONNECTION TO GROUNDWATER TREATMENT SYSTEM

Following the successful completion of the performance testing, EW-05B was connected to the GWETS in September 2009. This was accomplished by trenching approximately 550 ft from EW-05B to EW-05A, coring access holes in the concrete vault of EW-05A, installing a groundwater discharge line and electrical conduits from EW-05B to EW-05A, and disconnecting the existing electrical and communication lines from EW-05A and connecting them to the newly installed lines running from EW-05B to EW-05A. Activities associated with the connection of EW-05B to the GWETS included the following:

- Soil excavation for the concrete vault and electrical pull box;
- Trenching and installation of the groundwater discharge line and electrical conduits;
- Hydrostatic pressure testing of the discharge line, coring the vault at EW-05A, and tying in the new groundwater discharge line and electrical conduit from EW-05B to EW-05A;
- Backfilling and site restoration;
- Connecting the new discharge line and electrical conduit to the existing discharge line and electrical connections in EW-05A;
- Installing the submersible pump and testing the connections in EW-05B.

The excavation, trenching and piping activities were conducted by Environmental Restoration, LLC, of Glastonberry, CT. The pump was installed in EW-05B by DL Maher Company, of Ayer, Massachusetts. Electrical connections were made by ES Boulos Company of Lewiston, Maine. All activities were conducted under subcontract to ECC and under the supervision of an ECC field geologist. The groundwater discharge line from EW-05B was connected to the discharge line in EW-05A by ECC personnel.

The following subsections summarize the activities associated with the connection of EW-05B.

2.5.1 Concrete Vault and Electrical Pull Box

The concrete vault and electrical pull box were delivered to the site on 13 July 2009. The vault and pull box were manufactured and delivered by George R. Roberts Company of Alfred, Maine. Prior to setting the vault, an area approximately 10 ft x 10 ft x 6 ft around EW-05B was excavated to facilitate the placing of the well vault. Approximately 8 ft of the stainless steel well riser was cut to fit inside the vault to provide for an approximate 2 ft stickup inside the finished vault. Due to artesian conditions at EW-05B, an expandable, watertight cap was fitted to the top of the well riser to prevent groundwater from flowing out the top of the well. A 6-inch layer of crushed stone was placed in the bottom of the excavation prior to setting the vault. The vault measured 8 ft x 8 ft x 6 ft and was delivered in two sections. Four, 4-inch holes were pre-cast in the side of the vault to allow access for the electrical conduits. A 24-inch settling slot was pre-cast in the lower bottom side of the vault to allow access for the groundwater discharge line and for any future settling of the vault. A 10-inch diameter hole was also pre-cast in the floor of the vault to allow for placement over the well riser. The bottom section was placed over the well riser using a truck-mounted crane, followed by the top section. A strip of ConSeal® Butyl waterproof sealant was placed between the top section of the vault and the bottom section. The vault is equipped with a 4 ft x 4 ft lockable aluminum access hatch. Two 4-inch pre-cast holes for passive ventilation pipes are located on the top of the vault. Details of the installation of the electrical pull box are summarized in Section 3.6.4. A detailed schematic of the vault and electrical pull box are provided in Appendix C.

2.5.2 Excavation, Trenching and Piping

The excavation, trenching, and piping activities began on 9 July 2009. A trench approximately 530 ft long by 5 ft deep was excavated from EW-05B to EW-05A. The excavated material was stockpiled next to the trench for later use as backfill material. Soils within the trench were fine to medium sand with no cobbles or organic matter. Due to the cohesive nature of the sand, trenching was accomplished without the use of a trench box or shoring. If personnel were required to enter the trench for any reason, the sidewalls at that location were sloped back 2:1 for health and safety purposes. Following placement of the concrete vault, the groundwater discharge line was installed in the bottom of the trench. Due to the nature of the native material in the bottom of the trench (fine to medium sand, no cobbles), the discharge line was installed without the addition of any settling material. The discharge line is constructed of 2-inch diameter DR-11 high-density polyethylene (HDPE) pipe. The pipe was delivered in 40 ft lengths and heat-welded together on-site. No glue was used in the joining of the groundwater discharge line.

Prior to installing the discharge line in the trench, an access hole was cored in the vault at EW-05A to allow that end of groundwater discharge line to be placed inside the vault. The hole was cored at a depth of approximately 5 ft bgs. The discharge line was then placed in the bottom of the trench and fed into the interior of each vault (EW-05B and EW-05A). The discharge line terminated approximately 3 ft inside each vault.

It should be noted that a former, abandoned underground Navy fuel line (consisting of two parallel steel pipes approximately 2 ft apart) runs through the site in a general north south direction. The groundwater discharge line crosses the fuel line approximately 200 ft from EW-05B. Prior to the beginning of trenching, the fuel line was located and flagged by Maine DigSafe. The fuel line was then exposed using hand tools. Due to a possible asbestos-

containing material (ACM) coating on the fuel line(s), plastic sheeting was wrapped around the line to prevent exposure to workers. The area under the fuel line was then excavated using hand tools and the groundwater discharge pipe was installed beneath the former fuel line. The location of the trenching route is shown on Figure 6.

2.5.3 Hydrostatic Pressure Test

Following installation of the discharge line and prior to backfilling, a hydrostatic pressure test was performed on the discharge line to check the integrity of the heat welds. The line was capped at both ends and filled with potable water. Hand valves at each end allowed for any air to be bled out of the line prior to testing. The line was then pressurized to 200 psi for a period of 1 hour. There was no loss of pressure and no visible leaks in the groundwater discharge line.

Following the hydrostatic pressure test, the trench was backfilled to approximately 3 ft below grade using the previously excavated material.

2.5.4 Electrical Pull Box and Electrical Conduits

Upon completing the installation of the groundwater discharge line and subsequent backfilling to 3 ft below grade, a 4 ft x 4 ft x 3 ft concrete electrical pull box was installed in the trench. Four, 4- inch diameter holes were pre-cast in two opposite sides of the pull box to allow for the placement of the electrical conduits. The pull box is equipped with a cast iron, 3 ft x 3 ft hatch. The pull box was placed approximately 250 ft from EW-05B (see Figure 6), and was installed flush with the ground surface. A 4-inch diameter hole was cored in the bottom of the pull box to allow for drainage of incidental surface runoff.

Following installation of the pull box, four 2-inch diameter Schedule 40 PVC (polyvinyl chloride) electrical conduits were installed in the trench. The conduits were delivered to the site in 10 ft sections, connected using PVC glue, and placed parallel to each other in the trench. The conduits were installed in two sections (four conduits in each section), one section from EW-05B to the pull box, and the second section from the pull box to EW-05A. One conduit houses the 480 volt, 3-phase power line for the submersible pump; one conduit houses the communications cable for the pressure transducer; and one conduit houses a 110-120 volt utility line. The fourth conduit will remain empty for possible future use. The conduits were terminated approximately 1 ft inside the pull box, and approximately 2 ft inside each vault. All conduits were placed a minimum of 24-inches below grade. All electrical lines were installed in the electrical conduits on 17 August through 19 August 2009, and were terminated (unconnected) within each vault.

As noted in Section 2.5.2, a former abandoned underground Navy fuel line is located within the site. As with the groundwater discharge line, the electrical conduits were also installed beneath the fuel line.

2.5.5 Backfilling and Site Restoration

Following the installation of the electrical conduits and pull box, the trench was backfilled with previously excavated material to approximately 1 ft below grade. Magnetic "Underground Water Line" tracer tape and red "Buried Electrical Line" caution tape was placed along the entire length of the trench. The trench and excavated areas around EW-05B, EW-05A, and the

electrical pull box were then backfilled to grade with previously excavated material and compacted with the excavating machine. Following compaction, approximately 6-inches of topsoil was placed along the length of the trench and around the excavated areas, spread evenly, and was seeded and covered with straw.

2.5.6 Submersible Pump Installation

A Grundfos® submersible pump, model #16S15-14, was installed in EW-05B on 9 September 2009, by DL Maher Company, Ayer, Massachusetts. The pump is equipped with a 1.5 horsepower, 3-phase, 60-cycle, 460 volt motor. The pump intake was installed at a depth of 68 ft below the top of the well riser. To avoid confusion, it should be noted that approximately 8 ft of riser was removed to facilitate installation of the vault, and that the top of the well riser is now approximately 5 ft bgs. This depth places the intake approximately 2 ft above the bottom of the well screen. The discharge port of the pump is connected to 2-inch ID Schedule 80 PVC pipe. The pipe was threaded at each end for connection; no glue was used to connect the discharge pipe. Two torque-arresting stabilizers were installed on the discharge pipe. The discharge pipe was terminated 1 ft above the top of the well riser pending final connection to the groundwater discharge line. Due to artesian conditions at EW-05B, an expandable, watertight cap with fittings for the discharge pipe, submersible pump motor wire, and pressure transducer cable, was fitted to the top of the well riser to prevent groundwater from flowing out the top of the well during repairs to the pump or during power outages.

2.5.7 Electrical Connections

Electrical lines associated with EW-05B include the 480 volt, 3-phase power line (with ground) for the submersible pump; the communications cable for the pressure transducer; and a 110-120 volt utility line (with ground). All lines were installed in separate conduits on 17 August through 19 August 2009 and were terminated within each vault. On 10 September 2009, the power lines for the submersible pump, pressure transducer, and 110-120 volt utility line that were connected to EW-05A, were disconnected. These lines were then connected to the newly installed power lines for EW-05B. Electrical connections were completed on 11 September 2009. All electrical connections were made by ES Bolus, of Lewiston, Maine. Specifications on the electrical wire installed at EW-05B are as follows:

- Submersible pump - 600 volt, #6 gauge XHHW, #10 gauge XHHW ground wire;
- Pressure transducer – 4-20 milliamp 24Vdc, #16 Gauge, 2 strand shielded with ground;
- 110-120 volt utility line - #12 gauge THHN stranded wire.

2.5.8 Connection to Groundwater Discharge Line

EW-05B was connected to the groundwater discharge line formerly used for EW-05A on 10 and 11 September 2009, thereby connecting EW-05B to the GWETS. The flowmeter previously used to measure flow from EW-05A was left intact connected to the discharge line in the EW-05A vault, and will be used to measure flow from EW-05B.

2.6 Surveying

The horizontal location of the trench and piping from EW-05B to EW-05A was surveyed using a sub-meter Trimble® Global Positioning System (GPS) survey instrument by ECC field personnel. Horizontal locations were recorded in meters using the NAD 1983, UTM, Zone 19N Coordinate System. This survey data is provided in Appendix F.

The top of the well riser at EW-05B will be surveyed by a State of Maine-licensed land surveyor, who will determine the horizontal (± 0.01-ft) and vertical (± 0.01-ft) positioning of the well. Horizontal location will be determined and reported based on NAD 1983, UTM, Zone 19N Coordinate System. Vertical control will be established in accordance with National Geodetic Vertical Datum.

3.0 REFERENCES

EA Engineering, Science, and Technology, Inc. 2005. Summary of Rotosonic and Direct-Push Groundwater Sampling for Five Borings at the Eastern Plume Completed in June 2005, Naval Air Station, Brunswick, Maine. August.

ECC. 2007. Final Extraction Well Installation Work Plan, Eastern Plume, Naval Air Station, Brunswick, Maine. April.

ECC. 2009. Final Letter Summary Report, Performance Testing and Groundwater Sampling, Extraction Well EW-05B. July.

FIGURES

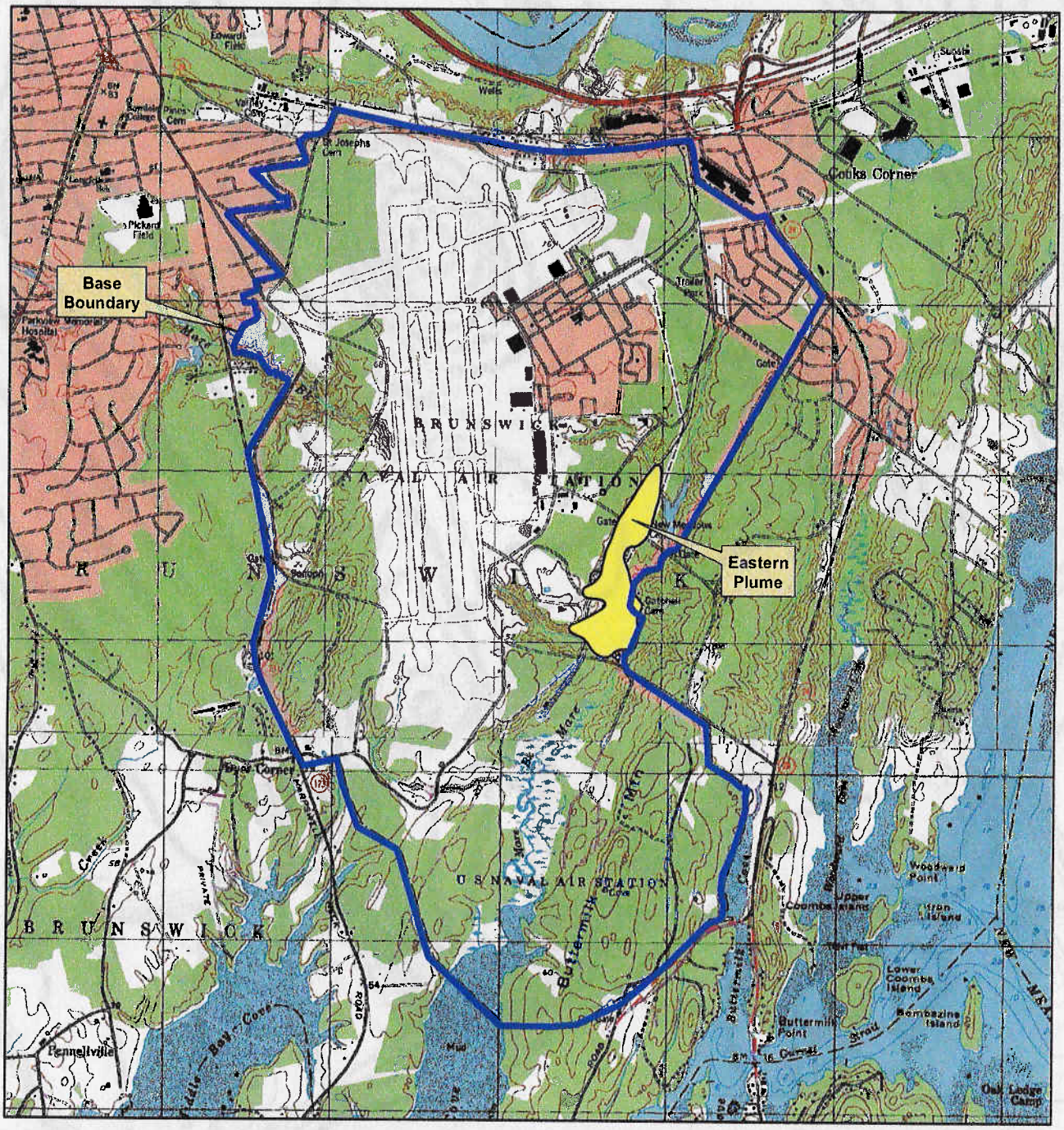

Contract. No.	N62472-02-D-0810
Description	NAS Brunswick, ME
Coordinate system	NAD 1983, UTM, Zone 19 N in meters
Sources	Naval Base Boundary provided by Navy.

Date	8-OCT-2009	Rev.	Date	App. By
DB	C. Guido			
CB	J. Donovan			
AB				

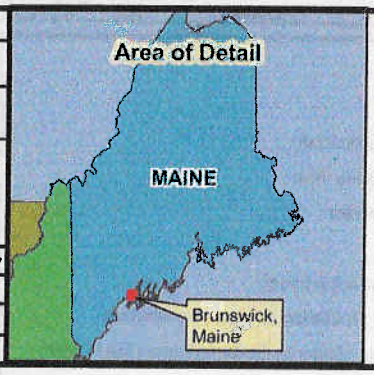

Legend

- Naval Air Station Brunswick Boundary
- Approx. Extent of Eastern Plume (Sept 2008)

Figure 1

Site Location
Eastern Plume

Naval Air Station
Brunswick, Maine

GIS Server, C:\NAVY_GIS\TO07_Brunswick Site1and3\MapDocuments\Extraction_Well\FW05B\EW05B_Fig1.mxd

0 750 1,500 3,000 Feet

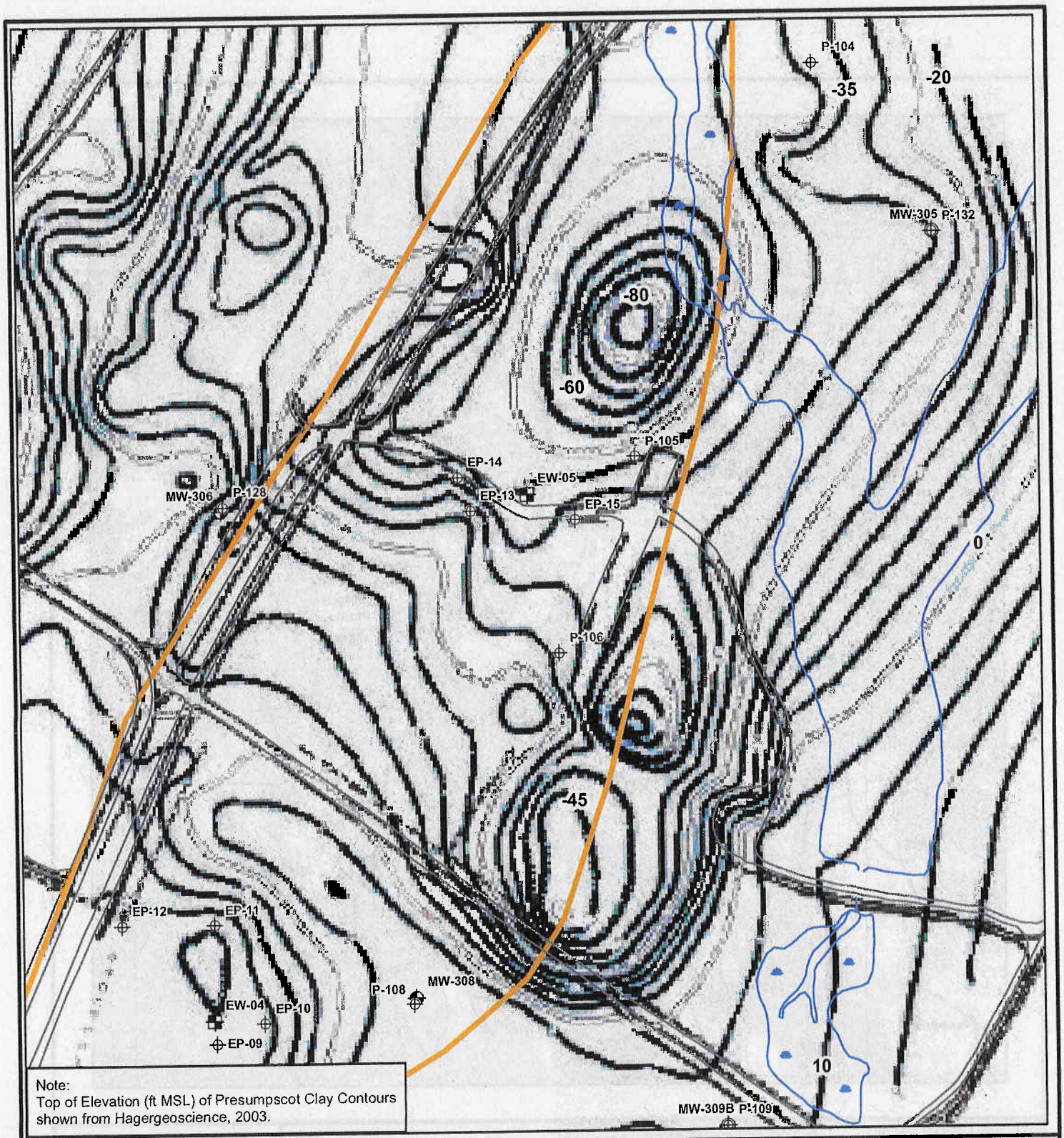

Note:
Top of Elevation (ft MSL) of Presumpscot Clay Contours shown from Hagergeoscience, 2003.

Contract No.	N624R-02-D-0810
Description	NASB Brunswick, ME
Coordinate system	NAD 1983, UTM Zone 19N, meters
Sources	Naval Base Boundary provided by Navy.

Date	13-OCT-2009	Rev.	Date	App. By
DB	C. Guido			
CB	J. Donavan			
AB				

Area of Detail

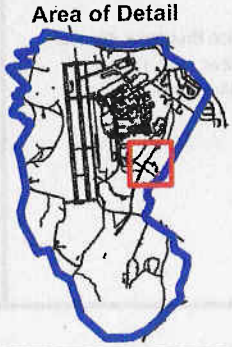

Legend

- Extraction Well
- Monitoring Well
- Piezometer
- Road
- Stream & Wetland
- Naval Air Station Brunswick Boundary
- Approx. Extent of Eastern Plume (Sept 2008)

Figure 2

Geophysical Survey
2003
Eastern Plume

Naval Air Station
Brunswick, Maine

GIS Server, C:\NAVY_GIS\TO07_Brunswick\Site1and3\MapDocuments\Extraction_Well\EW05B\EW05B_Fig2.mxd

0 55 110 220 Feet

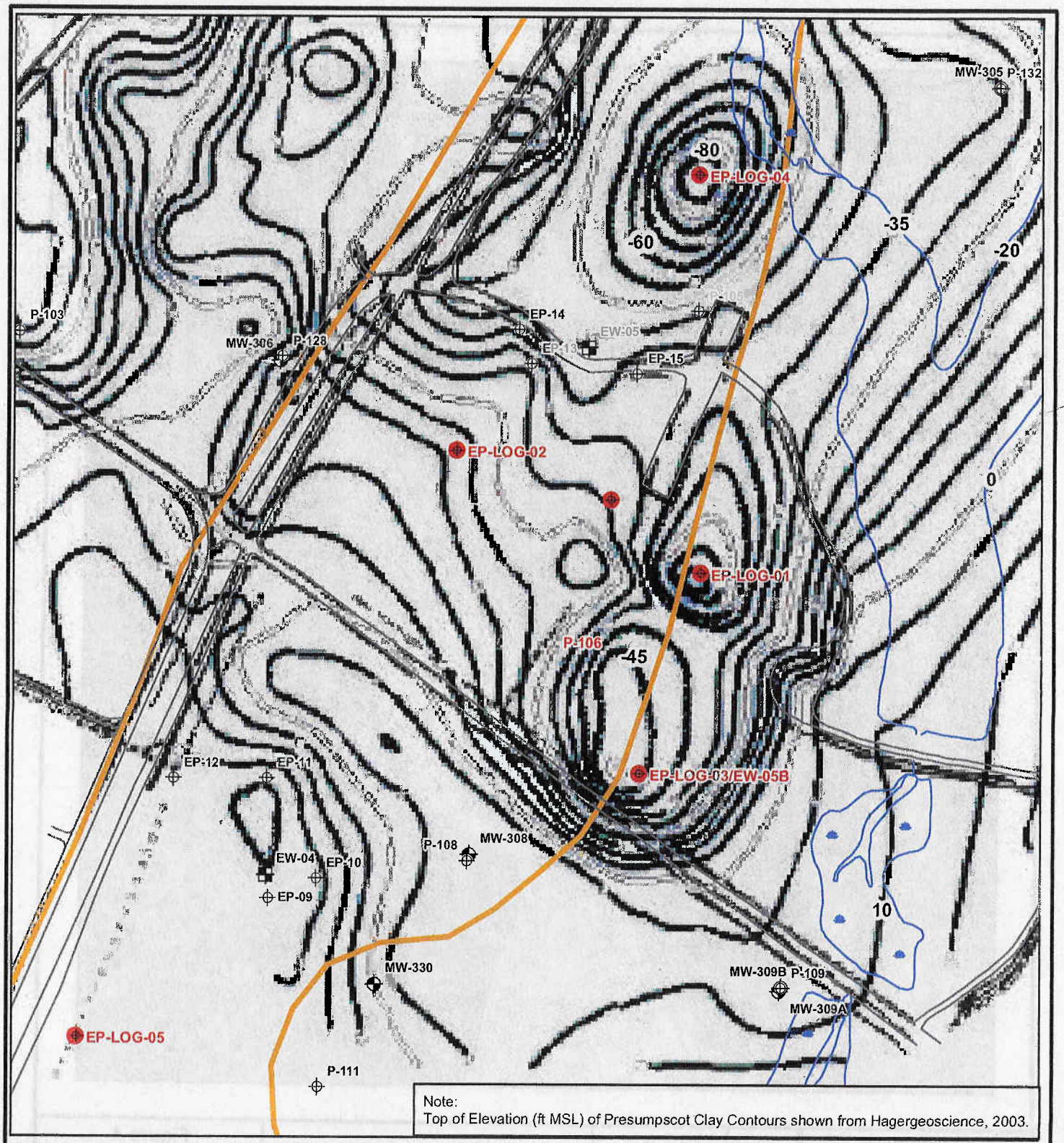

Contract No.	N624R-02-D-0810
Description	NASB Brunswick, ME
Coordinate system	NAD 1983, UTM Zone 19N, meters
Sources	Naval Base Boundary provided by Navy.

Date	31 DEC 2009	Rev.	Date	App. By
DB	C. Guido			
CB	J. Donavan			
AB				

Area of Detail

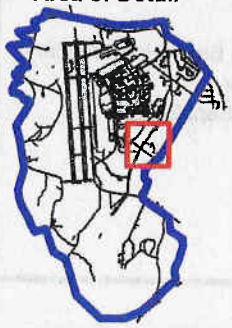

Legend

- Extraction Well
- Monitoring Well
- Piezometer
- Location of Interest
- Road
- Stream & Wetland
- Naval Air Station Brunswick Boundary
- Approx. Extent of Eastern Plume (Sept 2008)

Figure 3

Location of Borings
2005
Eastern Plume

Naval Air Station
Brunswick, Maine

GIS Server, C:\NAVY_GIS\TO07_Brunswick\Site1and3\MapDocuments\Extraction_Well\EW05B\EW05B_Fig3.mxd

0 50 100 200 Feet

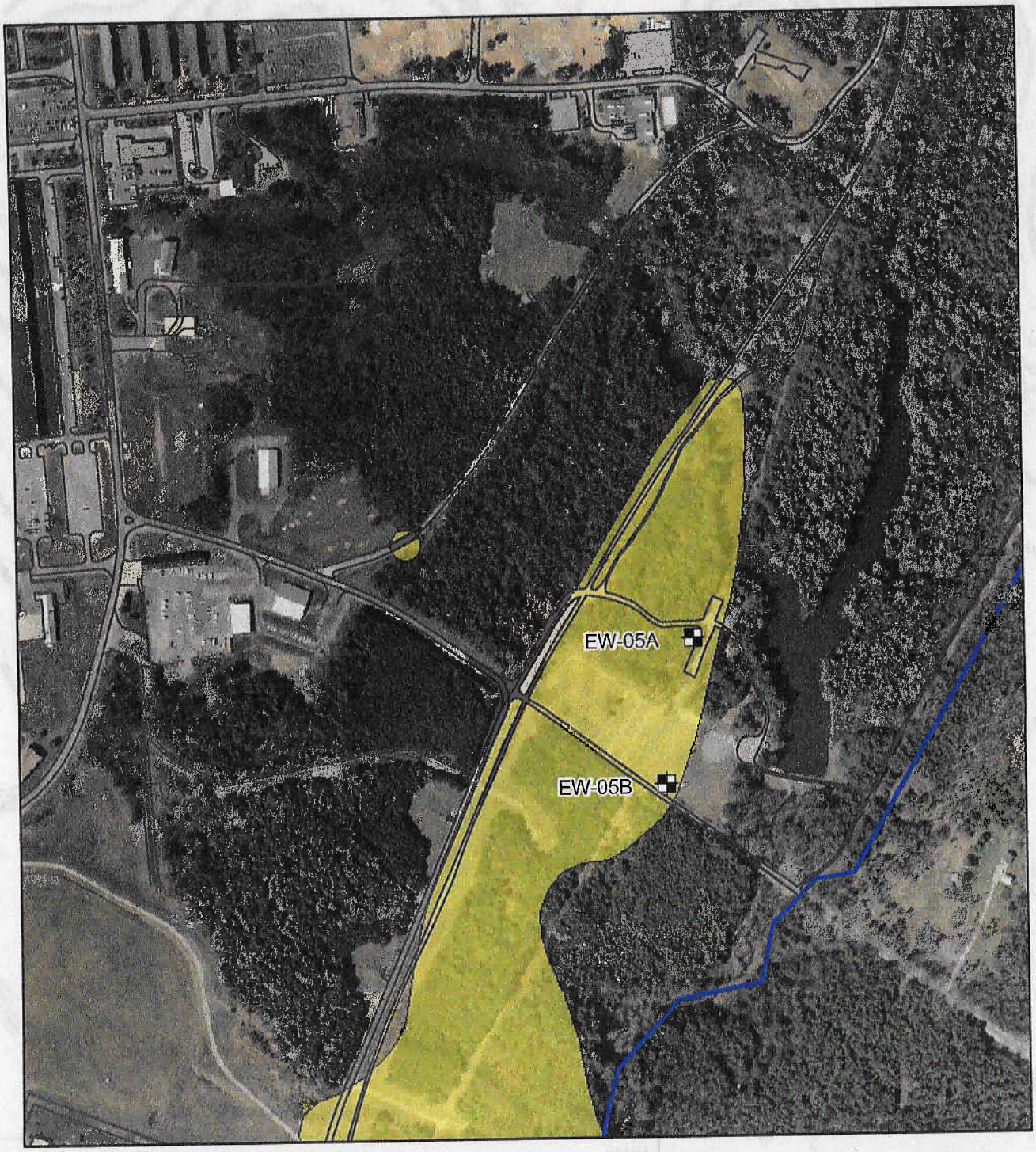

Contract No.	N62472-02-D-0810
Description	NASB Brunswick, ME
Coordinate system	NAD 1983, UTM, Zone 19N
Sources	Naval Base Boundary provided by ME GIS.

Date	8-OCT-2009	Rev.	Date	App. By
DB	C. Guido			
CB	J. Donovan			
AB				

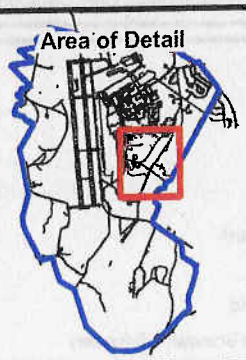

Legend

- Extraction Well
- Naval Air Station Brunswick Boundary
- Approx. Extent of Eastern Plume (Sept 2008)

Figure 4

Location of Extraction Well EW-05B within Eastern Plume

Naval Air Station Brunswick, Maine

GIS Server, C:\NAVY_GIS\TO07_Brunswick\Site1and3\MapDocuments\Extraction_Well\EW05B\EW05B_Fig4.mxd

0 125 250 500 Feet

Contract No.	N62472-02-D-0810
Description	NASB Brunswick, ME
Coordinate system	NAD 1983, UTM, Zone 19N
Sources	Naval Base Boundary provided by ME GIS.

Date	8-OCT-2009	Rev.	Date	App. By
DB	C. Guido			
CB	J. Gelherer			
AB				

Legend

- Extraction Well
- Piezometer
- Extraction Well Piezometer
- Stream Gauge
- Stream & Wetland

Figure 5

Location of Extraction Well/ Piezometers/ Stream Gauges Eastern Plume

Naval Air Station Brunswick, Maine

GIS Server, C:\NAVY_GIS\TO07_Brunswick\Site1and3\MapDocuments\Extraction_Well\EW05B\EW05B_Fig5.mxd

0 25 50 100 Feet

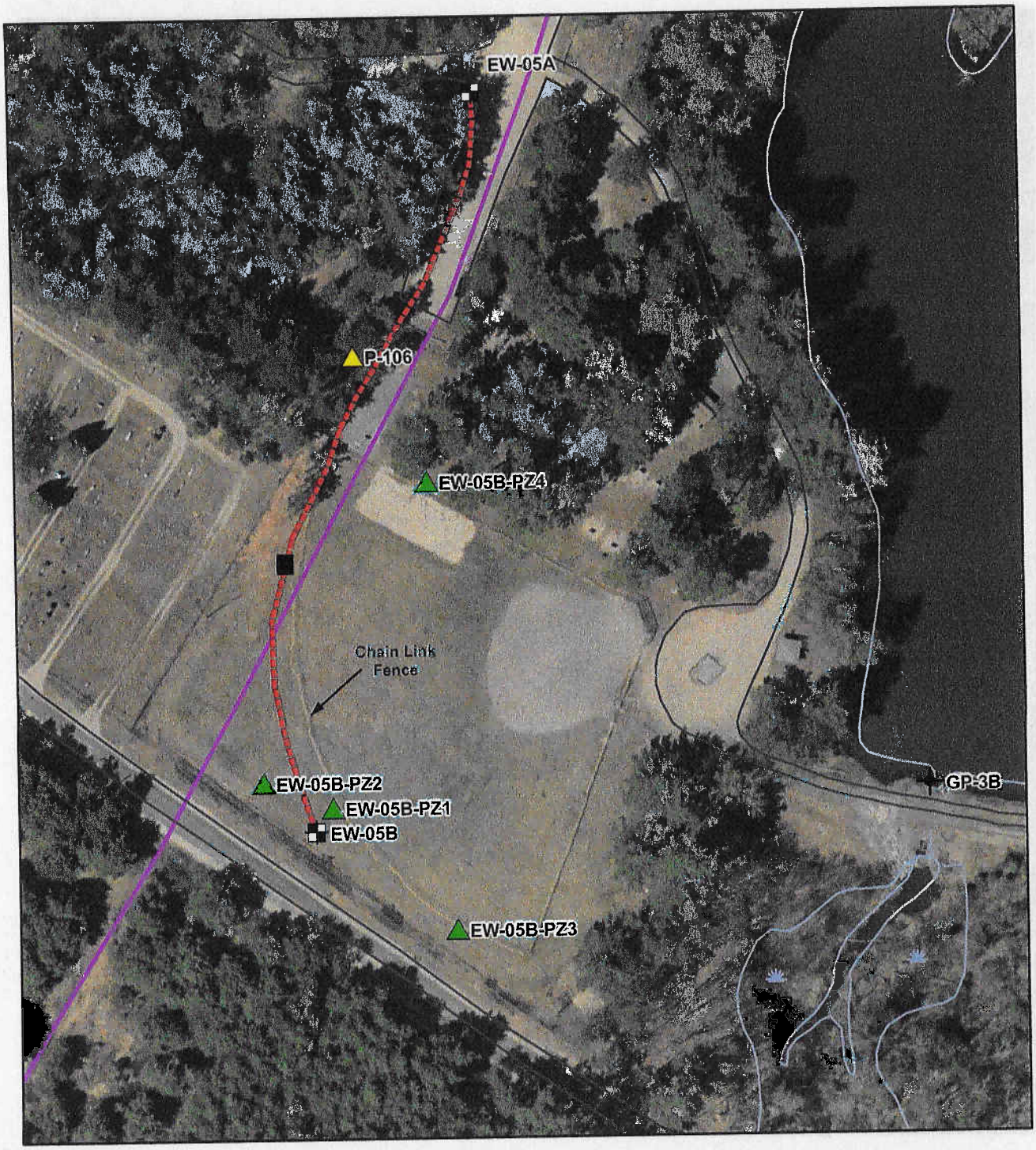

Contract No.	N62472-02-D-0810
Description	NASB Brunswick, ME
Coordinate system	NAD 1983, UTM, Zone 19N
Sources	Naval Base Boundary provided by ME GIS.

Date	31-DEC-2009	Rev.	Date	App. By
DB	C. Guido			
CB	J. Gatherer			
AB				

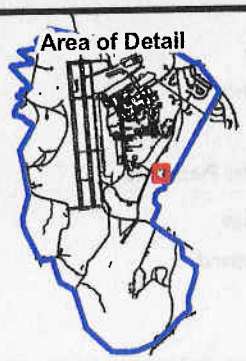

Legend

- Extraction Well
- Piezometer
- Extraction Well Piezometer
- Stream Gauge
- Stream & Wetland
- Trenching Route
- Approx. Location of Former Fuel Pipeline
- Electrical Pull Box

Figure 6

EW-05B
Trenching Route
Eastern Plume

Naval Air Station
Brunswick, Maine

GIS Server, C:\NAVY_GIS\TO07_Brunswick\Site1and3\MapDocuments\Extraction_Well\EW05B\EW05B_Fig6.mxd

0 25 50 100 Feet

TABLES

Table 1
Direct-Push Groundwater Samples Collected June 2005*
Naval Air Station
Brunswick, Maine

Chemical	Units	ME MEG (ppb)	EPA MCL (ppb)	EP-LOG-01[1] GW03[2] 69-73 ft bgs[3]	EP-LOG-02[1] GW04[2] 55.5-57.5ft bgs[3]	EP-LOG-03[1] GW05[2] 69-73 ft bgs[3]	EP-LOG-04[1] GW05[2] 83-84 ft bgs[3]	EP-LOG-05[1] GW02[2] 43-47 ft bgs[3]
Volatile Organic Compounds								
Total VOC	µg/L	NL	NL	1,489	901	4,405	134	69
1,1,1-Trichloroethane	µg/L	200	200	**787**	**495**	**2,810**	63	50
1,1-Dichloroethane	µg/L	70	NL	**75**	62	<200 U	18	3
1,1-Dichloroethene	µg/L	0.6	7	**178**	**65**	**515**	**11**	<2 U
1,2-Dichloroethene, Total	µg/L	70	70	27	**83**	<200 U	13	2
2-Butanone	µg/L	3,600	4,000	<200 U	<100 U	<1,000 U	<10 U	<10 U
Acetone	µg/L	6,300	NL	<200 U	<100 U	<1,000 U	<10 U	<10 U
Chloroform	µg/L	70	80	<40 U	<20 U	<200 U	<2 U	<2 U
cis-1,2-Dichloroethene	µg/L	70	70	27 J	**83**	<200 U	13	2
Tetrachloroethene	µg/L	7	5	<40 U	<20 U	<200 U	<2 U	**5**
Trichloroethene	µg/L	32	5	**422**	**496**	**1,080**	**29**	**9**

1 = Soil boring designation
2 = Groundwater sample designation
3 = Depth of sample collection below ground surface
J = Estimated result
U = Not detected at or above method reporting limit
CDC = Maine Center for Disease Control
EPA = U.S. Environmental Protection Agency
INF = Sample collected at influent of HIPOx treatment system
HE = Sample collected at effluent of HIPOx treatment system
PE = Sample collected at treatment plant effluent
MCL = Maximum Contaminant Level
MEG = Maine CDC Maximum Exposure Guideline
NL = Not listed
Only detected results shown.
* - Reference - EA Summary of the Rotosonic and Direct-Push Sampling for Five Borings at the Eastern Plume Completed in June 2005
Bold and shaded indicates exceedance of regulatory standard

APPENDIX A

Responses to Comments and Concurrence Letters

RESPONSE TO COMMENTS FROM THE STATE OF MAINE DEPARTMENT OF ENVIRONMENTAL PROTECTION – BUREAU OF REMEDIATION AND WASTE MANAGEMENT ON THE DRAFT EXTRACTION WELL EW-05B INSTALLATION COMPLETION REPORT, EASTERN PLUME, NAVAL AIR STATION BRUNSWICK, MAINE

Commentor: Claudia Sait, MEDEP - Project Manager-Federal Facilities Bureau of Remediation & Waste Management	
Comment Issue Date: 10 December 2009	**Navy Response Date: 5 January 2010**

Pursuant to Section VI of the Naval Air Station, Brunswick, Maine Federal Facility Agreement (Oct 1990), as amended, the Maine Department of Environmental Protection (MEDEP) has reviewed the draft "Extraction Well EW-05B Installation Completion Report – Eastern Plume", dated October 2009, prepared by ECC. Based on that review MEDEP has the following minor comments.

SPECIFIC COMMENTS:

Page 3, EA Investigation, Section 1.2.3 – paragraph 1 and Figure 3: The location of EP-LOG-05 is just south of the area shown on the figure. If possible shift the layout to the south or adjust the scale so the figure includes EP-LOG-05.

Response: **Concur.** Figure 3 will be modified to show the location of EP-LOG-5.

Page 11, Excavation, Trenching, and Piping, Section 2.5.2 and Figure 6: Please add an approximate location for the abandoned Navy fuel pipeline to the figure.

Response: **Concur.** Figure 6 will be modified to show the approximate location of the abandoned Navy fuel pipeline.

Other than these minor comments MEDEP found the report to be a well organized summary of the EW-05B installation and hook-up to the groundwater extraction and treatment system.

Response: **Noted.**

STATE OF MAINE
DEPARTMENT OF ENVIRONMENTAL PROTECTION

JOHN ELIAS BALDACCI
GOVERNOR

DAVID P. LITTELL
COMMISSIONER

January 7, 2010

Mr. Todd Bober
Department of Navy
Base Realignment and Closure
Program Management Office-Northeast
4911 South Broad Street
Philadelphia, PA 19112-1303

Re: Draft Extraction Well EW-5B Installation Completion Report
Naval Air Station, Brunswick, Maine

Dear Mr. Bober:

Pursuant to Section VI of the Naval Air Station, Brunswick, Maine Federal Facility Agreement (Oct 1990), as amended, the Maine Department of Environmental Protection (MEDEP) has reviewed the Response to Comment on the draft "Extraction Well EW-5B Installation Completion Report – Eastern Plume", dated January 5, 2010, prepared by ECC. Based on that review MEDEP has no further comments provided the proposed revisions are incorporated into the final document.

Please contact me at (207) 287-7713 or claudia.b.sait@maine.gov, if you have any questions or comments.

Respectfully,

Thomas E. Wolfe for

Claudia Sait
Project Manager-Federal Facilities
Bureau of Remediation & Waste Management

Cf: Hard Copy: Electronic Copy

File	Chris Evans-MEDEP	Mike Fagan-BNAS	Mike Daly-EPA
Ed Benedikt	Paul Burgio –BRAC PMO	Al Easterday–ECC	Jeff Orient - Tt NUS
	Todd Bober – BRAC PMO	Jill Parrett H&S	Catherine Guido-ECC
	David Chipman	Carol Warren	Vicki Boundy-MMRA
	Suzanne Johnson-BASCE	Scott Libby	Gina Calderone-ECC
	Carolyn Lepage-Lepage Environmental		

AUGUSTA
17 STATE HOUSE STATION
AUGUSTA, MAINE 04333-0017
(207) 287-7688 FAX: (207) 287-7826
RAY BLDG., HOSPITAL ST.

BANGOR
106 HOGAN ROAD, SUITE 6
BANGOR, MAINE 04401
(207) 941-4570 FAX: (207) 941-4584

PORTLAND
312 CANCO ROAD
PORTLAND, MAINE 04103
(207) 822-6300 FAX: (207) 822-6303

PRESQUE ISLE
1235 CENTRAL DRIVE, SKYWAY PARK
PRESQUE ISLE, MAINE 04679-2094
(207) 764-0477 FAX: (207) 760-3143

web site: www.maine.gov/dep

CONCURRENCE
UNITED STATES ENVIRONMENTAL PROTECTION AGENCY ON THE DRAFT EXTRACTION WELL EW-05B INSTALLATION COMPLETION REPORT, EASTERN PLUME

From: <Daly.Mike@epamail.epa.gov>
To: "Catherine Guido" <CGuido@ecc.net>
CC: "Al Easterday" <AEasterday@ecc.net>, "Gina Calderone" <GCalderone@ecc.ne...
Date: 11/2/2009 11:43 AM
Subject: Re: NASB Deliverables - Regulator Review Lists

Good Morning Catherine,

EPA has reviewed the draft EW-5B Completion Report & we have no substantive comments with the document.

Take Care,

Mike

"Catherine Guido" <CGuido@ecc.net> To Mike Daly/R1/USEPA/US@EPA, 10/29/2009 01:44 PM
"Claudia Sait" <Claudia.B.Sait@maine.gov>,"Al Easterday" <AEasterday@ecc.net>, "Gina Calderone" <GCalderone@ecc.net>, <paul.burgio@navy.mil>, <todd.bober@navy.mil>

Subject: NASB Deliverables - Regulator Review Lists

Hello Claudia and Mike,

Below is a list of deliverables currently under regulator review. I have listed deliverables by distribution date. Thank you for the comments you have submitted recently. Comments submitted as soon as possible for deliverables would be greatly appreciated.

DEP:
Draft EW-08 & EW-09 Trench & Const. Work Plan - RECEIVED!
Draft Site 17 Relocated Soils Completion Report - hard copy shipped 10/7/09
Draft EW-05B Completion Report - hard copy shipped 10/29/09

EPA:
Draft Site 9 Upper Impoundment Pond Summary Letter - RECEIVED!
Draft Site 17 Relocated Soils Completion Report - hard copy shipped 10/7/09
Draft EW-08 & EW-09 Trench & Const. Work Plan - hard copy shipped 10/15/09
Draft EW-05B Completion Report - hard copy shipped 10/29/09

Thank you,
Catherine

Catherine Guido
Staff Environmental Scientist
ECC
33 Boston Post Road West
Suite 340
Marlborough, MA 01752
Tel: (508) 229-2270 X121 (Tue-Fri)
Fax: (508) 229-7737
Cell: (508) 397-3439 (1/2 Mon)[attachment "Catherine Guido.vcf" deleted by Mike Daly/R1/USEPA/US] [attachment "Catherine Guido.vcf" deleted by Mike Daly/R1/USEPA/US]

APPENDIX B

Boring Logs

EA Engineering, Science, and Technology, Inc.

LOG OF SOIL BORING

Coordinates:
Surface Elevation:
Well Riser Elevation:

Job. No.	Client:	Location:
6177102.1002	ECC	NASB Brunswick, ME

Drilling Method: Soil Borings, Rotosonic Drilling Technique

Sampling Method: 20' Core Barrel, continuous from surface

Boring No. **EP-LOG-03**

Sheet 1 of 5

Drilling Water Level	
Date	NA
Time	NA

Start	Drilling Date/Times	Finish
June 23 2005 0730		June 22 2005 1100

Surface Conditions:

Sample Type	Feet Driven/ft. Recvrd	Depth Boring (ft)	Samp # / depth (ft)	PID / FID (ppm)	Ft bgs	Unit	SOIL DESCRIPTION
Sonic Core	5.0 2.0	5.0		0.0 0.0	0	Upper Sand	0.0-0.9 = Drk brn to blk ORGANIC; 0.9-1.3 = Red brn F SAND
				0.0 0.0	1		1.3-2.0 = LT brn F SAND, trace silt
					2		
					3		GW between 2.0 and 5.0 feet bgs
					4		
Sonic Core	10.0 10.0	15.0		0.0 0.0	5		5.0-8.0 = LT brn F SAND, trace silt
					6		
					7		
				0.0 0.0	8		8.0-10.2 = Red brn F SAND, trace silt
					9		
				0.0 0.0	10		10.2-13.9 = LT brn F SAND, trace silt
					11		
					12		
				0.0 0.0	13	Transition	13.9-14.1 = Grey SILT, trace sand
				0.0 0.0	14		14.1-15.0 = LT brn F SAND, trace silt
Sonic Core	20.0 16.0	35.0		0.0 0.0	15		15.0-17.6 = LT brn F SAND, trace silt
					16		
					17		17.6-18.5 = LT brn to grey SILT, lit F sand (laminations)
				0.0 0.0	18		18.5-19.3 = Red brn F SAND, trace silt
					19		19.3-20.7 = LT brn to red to grey SILT, lit F sand (laminations)
				0.0 0.0	20		20.7-22.1 = Red brn F SAND, trace silt
					21		
					22		22.1 - 23.1 = LT brn to red to grey SILT, lit F sand (laminations)
				0.0 0.0	23		23.1-23.9 = Grey brn F SAND, some silt; 23.9-24.8 = LT brn to red to grey SILT, lit F sand (laminations)
				0.0 0.0	24		24.8-33.6 = Grey VF SAND, some clay, lit silt

Logged by: C. Springer
Date: 23 June 2005
Drilling Contractor: DL Maher, North Reading MA
Driller: C. Huther

EA Engineering, Science, and Technology, Inc.

LOG OF SOIL BORING

Coordinates:
Surface Elevation:
Well Riser Elevation:

Job. No.	Client:	Location:
6177102.1002	ECC	NASB Brunswick, ME

Drilling Method: Soil Borings; Rotosonic Drilling Technique

Sampling Method: 20' Core Barrel, continuous from surface

Drilling Water Level

Date	NA		
Time	NA		

Boring No. EP-LOG-03

Sheet 2 of 5

Start	Drilling Date/Times	Finish
June 23 2005 0730		June 22 2005 1100

Surface Conditions:

Sample Type	Feet Driven/ft. Recvrd	Depth Boring (ft)	Samp # / depth (ft)	PID / FID (ppm)	Ft bgs	GW Samp Inter-val	SOIL DESCRIPTION
Sonic Core	10.0 7.0	35.0			25	Transition	
					26		
					27		
					28		
					29		
					30		
					31		
					32		
					33		33.6-35.0 = Grey CLAY
					34		
Sonic Core	20.0 13.5	55.0		0.0 0.0	35		35.0-39.8 = Grey CLAY
					36		
					37		
					38		
					39		39.8-48.5 = Grey F SAND, some clay, lit silt (inter-bedded silt lenses 0.5" to 2.0" thick) (wet)
					40		
					41		GW-01 - 41.0 TO 45.0
					42		GW-01 SAMPLE RATIONALE: WATER BEARING SANDY INTERVAL IN THE LOWER TRANSITION.
					43		
					44		
					45		
					46		
					47		
					48		
					49		

Logged by: C. Springer
Date: 23 June 2005
Drilling Contractor: DL Maher, North Reading MA
Driller: C. Huther

EA Engineering, Science, and Technology, Inc.

LOG OF SOIL BORING

Coordinates:
Surface Elevation:
Well Riser Elevation:

Job. No.	Client:	Location:
6177102.1002	ECC	NASB Brunswick, ME

Drilling Method: Soil Borings, Rotosonic Drilling Technique

Sampling Method: 20' Core Barrel, continuous from surface

Drilling Water Level: Date NA; Time NA

Boring No. **EP-LOG-03**

Sheet 3 of 5

Start	Drilling Date/Times	Finish
June 23 2005 0730		June 22 2005 1100

Surface Conditions:

Sample Type	Feet Driven/ft. Recvrd	Depth Boring (ft)	Samp # / depth (ft)	PID / FID (ppm)	Ft bgs	GW Samp Inter-val	SOIL DESCRIPTION
					50	Transition	GW-02 - 50.0 TO 54.0
					51		GW-02 SAMPLE RATIONALE: WATER BEARING SANDY INTERVAL IN THE LOWER TRANSITION. THE FORMATION AT THIS INTERVAL IS INTERPRETED TO BE A LOW YIELD ZONE.
					52		
					53		
					54		
Sonic Core	15.0 5.0	70.0		0.0 0.0	55	Lower Sand	55.0-60.0 = LT brn F SAND, trace silt (wet)
					56		GW-03 - 55.0 TO 59.0
					57		GW-03 SAMPLE RATIONALE: WATER BEARING INTERVAL IN UPPER PORTION OF LOWER SAND.
					58		
					59		
					60		
					61		
					62		
					63		GW-04 - 62.0 TO 66.0
					64		GW-04 SAMPLE RATIONALE: WATER BEARING INTERVAL IN LOWER PORTION OF LOWER SAND. THE FORMATION AT THIS INTERVAL IS INTERPRETED TO BE A LOW YIELD ZONE.
					65		
					66		
					67		
					68		
					69		
Sonic Core	20.0 12.0	90.0		1.0 3.0	70		70.0-73.0 = Grey F SAND, some clay
					71		GW-05 - 69.0 to 73.0
					72		GW-05 SAMPLE RATIONALE: WATER BEARING INTERVAL AT BASE OF LOWER SAND.
				0.0 0.0	73	Clay	73.0-82.0 = Grey CLAY
					74		

Logged by: C. Springer
Date: 23 June 2005
Drilling Contractor: DL Maher, North Reading MA
Driller: C. Huther

EA Engineering, Science, and Technology, Inc.

LOG OF SOIL BORING

Coordinates:
Surface Elevation:
Well Riser Elevation:

Job. No.	Client:	Location:
6177102.1002	ECC	NASB Brunswick, ME

Drilling Method: Soil Borings, Rotosonic Drilling Technique

Sampling Method: 20' Core Barrel, continuous from surface

Boring No. **EP-LOG-03**

Sheet 4 of 5

Drilling Water Level	
Date	NA
Time	NA

Start	Drilling Date/Times	Finish
June 23 2005 0730		June 22 2005 1100

Surface Conditions:

Sample Type	Feet Driven/ft. Recvrd	Depth Boring (ft)	Samp # / depth (ft)	PID / FID (ppm)	Ft bgs	GW Samp Inter-val	SOIL DESCRIPTION
					75	Clay	
					76		
					77		
					78		
					79		
					80		
					81		
					82		
					83		
					84		
					85		
					86		
					87		
					88		
					89		
Sonic Core	10.0 8.0	100.0			90		90.0-98.0 = Gray CLAY
					91		
					92		
					93		
					94		
					95		
					96		
					97		
					98		
					99		

Logged by: C. Springer
Date: 23 June 2005
Drilling Contractor: DL Maher, North Reading MA
Driller: C. Huther

EA Engineering, Science, and Technology, Inc.

LOG OF SOIL BORING

Coordinates:
Surface Elevation:
Well Riser Elevation:

Job. No.	Client:	Location:
6177102.1002	ECC	NASB Brunswick, ME

Drilling Method: Soil Borings, Rotosonic Drilling Technique

Sampling Method: 20' Core Barrel, continuous from surface

Boring No. **EP-LOG-03**

Sheet 5 of 5

Drilling Water Level	
Date	NA
Time	NA

Start	Drilling Date/Times	Finish
June 23 2005 0730		June 22 2005 1100

Surface Conditions:

Sample Type	Feet Driven/ft. Recvrd	Depth Boring (ft)	Samp # / depth (ft)	PID / FID (ppm)	Ft bgs	GW Samp Inter-val	SOIL DESCRIPTION
Sonic Core	10.0 10.0	110.0			100	Clay	100.0-109.2 = Grey CLAY
					101		
					102		
					103		
					104		
					105		
					106		
					107		
					108		
					109		109-2-109-9 = Grey M SAND, lit S to M gravel
					110	Rock	1109.9-110 = Weathered ROCK
					111		End of Boring at 110.0 feet
					112		
					113		
					114		
					115		
					116		
					117		
					118		
					119		
					120		
					121		
					122		
					123		
					124		

Logged by: C. Springer
Drilling Contractor: DL Maher, North Reading MA
Date: 23 June 2005
Driller: C. Huther

Environmental Chemical Corporation

LOG OF SOIL BORING

Coordinates: X-4859643.21, Y-425913.70
Surface Elevation: 34.48
Casing Below Surface:
Reference Elevation: 36.30
Reference Description: Top PVC Riser

Job. No. 5700.007 | Client NAVFAC | Location: EW-05B - NASB Eastern Plume

Drilling Method: Drive and Wash - 4" Casing | Boring No. EW-05B PZ-1

Sampling Method: 2 in. dia. 2 ft Split Spoon, 140 lb drop weight | Sheet 1 of 5

Drilling

Water Lev.					Start	Finish
Time					1-Aug-07	2-Aug-07
Date						
Reference						

Surface Conditions: Grass

Digital Picture #	Sample Type	In. Drvn / In. Recvrd	Dpth. Csg.	Samp. # / Samp. depth	PID (ppm)	Blows per 6 in.	Depth (feet)	USCS Log	
	SS	24/22	0		0	5	0		
						5			Top 10" brn SILT tr f-sand
						4	1		Bott 12" lt brn f-SAND, damp
						5			
	SS	24/18	0		0	4	2		
						5			Lt brn f-SAND, tr silt, damp
						6	3		
						8			
	SS	24/22	0		0	8	4		
						8			Lt brn f-SAND, tr silt, damp
						8	5		
						9			
	SS	24/20	0		0	9	6		
						8			Lt brn f-SAND, tr silt
						9	7		Bott 13" red laminations, damp
						10			
	SS	24/22	9		0	10	8		
						10			Lt brn f-SAND, top 11" moist
						10	9		Bott 11" wet - brn/gry f-SAND, red laminations, bits of mica
						10			
	SS	24/14	9		0	10	10		
						10			Brn/gry f-SAND, tr silt - wet
						12	11		Red motteling
						11			
	SS	24/11	12		0	8	12		
						12			Brn/gry f-SAND, tr silt - wet
						14	13		Bott 2" reddish f-SAND
						18			
	SS	24/14	14		0	9	14		
						9			Brn/gry f-SAND, tr silt
						13	15		2" layer reddish f-SAND at 15' 5" - wet
						14			
	SS	24/16	14		0	6	16		
						9			Brn/gry f-SAND, tr silt
						11	17		reddish f-SAND laminiations at 17'
						13			
	SS	24/15	18		0	7	18		
						11			Top 3" brn/gry f-SAND, tr silt
						15	19		3" layer gry SILT, tr clay
						18			Bott 9" gry/brn SILT, tr f-sand - wet

Logged by: J. Donovan
Drilling Contractor: East Coast Explorations

Date: 1-Aug-07
Driller: C. Palmer

WOR = Weight of Rods
WOH = Weight of Hammer

WELL SPECIFICATIONS:

Diam. of casing: 4" | Screen Interval: 65-75 ft | Sandpack: 76-63 ft | Grout: 61-2 ft
BOH: 82 ft | Riser Interval: 65-0 ft | Bentonite: 63-61 ft | Cover: Conc. Pad, Stick up

Environmental Chemical Corporation

LOG OF SOIL BORING

Coordinates: X-4859643.21, Y-425913.70
Surface Elevation: 34.48
Casing Below Surface:
Reference Elevation: 36.30
Reference Description: Top PVC Riser

Job. No. 5700.007	Client NAVFAC	Location: EW-05B - NASB Eastern Plume
Drilling Method: Drive and Wash - 4" Casing		Boring No. EW-05B PZ-1
Sampling Method: 2 in. dia. 2 ft Split Spoon, 140 lb drop weight		Sheet 2 of 5
		Drilling
Water Lev.		Start 1-Aug-07 / Finish 2-Aug-07
Time		
Date		
Reference		

Surface Conditions: Grass

Digital Picture #	Sample Type	In. Drvn / In. Recvrd	Dpth. Csg.	Samp. # / Samp. depth	PID (ppm)	Blows per 6 in.	Depth (feet)	USCS Log	Description
	SS	24/16	18		0	8	20		
						9			Gry/bry SILT, tr gry f-sand, tr clay
						21	21		Ltl red motteling - wet
						18			Bott 4" red/brn f-SAND
	SS	24/16	18		0	7	22		
						8			Top 3" red/brn f-SAND, 2" layer gry silty clay
						9	23		Bott 10" gry/brn f-SAND, tr silt, motteled - wet
						12			
	SS	24/15	24		0	5	24		
						12			Top 6" gry SILT, tr clay, tr f-sand
						10	25		Bott 9" gry f-SAND, some motteling - wet
						10			
	SS	24/16	24		0	5	26		
						6			Top 10" gry f-SAND, tr silt
						7	27		Bott 6" gry silty CLAY, tr f-sand - wet
						9			
	SS	24/18	24		0	6	28		
						2			Top 5" brn silty CLAY, tr f-sand
						2	29		Bott 13" gry CLAY, tr silt - wet
						1			
	SS	24/18	24		0	4	30		
						1			Gry clayey SILT, tr gry f-sand, soft - wet
						1	31		
						1			
	SS	24/23	29		0	WOR	32		
						WOR			Gry CLAY, soft - wet
						WOR	33		
						WOR			
	SS	24/24	29		0	WOR	34		
						WOR			Gry CLAY, soft - wet
						WOH	35		Bott 3" tr gry f-sand
						WOH			
	SS	24/22	34		0	WOH	36		
						WOH			Gry silty CLAY, soft - wet
						WOH	37		
						WOH			
	SS	24/24	34		0	WOR	38		
						WOR			Gry silty CLAY, tr f-gry sand, soft - wet
						WOR	39		
						WOH			

Logged by: J. Donovan
Date: 1-Aug-07
Drilling Contractor: East Coast Explorations
Driller: C. Palmer

WELL SPECIFICATIONS:

Diam. of casing: 4"
Screen Interval: 65-75 ft
Sandpack: 76-63 ft
Grout: 61-2 ft
BOH: 82 ft
Riser Interval: 65-0 ft
Bentonite: 63-61 ft
Cover: Conc. Pad, Stick up

Environmental Chemical Corporation

LOG OF SOIL BORING

Coordinates: X-4859643.21, Y-425913.70
Surface Elevation: 34.48
Casing Below Surface:
Reference Elevation: 36.30
Reference Description: Top PVC Riser

Job. No. 5700.007 | Client NAVFAC | Location: EW-05B - NASB Eastern Plume

Drilling Method: Drive and Wash - 4" Casing | Boring No. EW-05B PZ-1

Sampling Method: 2 in. dia. 2 ft Split Spoon, 140 lb drop weight | Sheet 3 of 5

Drilling: Start 1-Aug-07, Finish 2-Aug-07

Water Lev.				
Time				
Date				
Reference				

Surface Conditions: Grass

Digital Picture #	Sample Type	In. Drvn / In. Recvrd	Dpth. Csg.	Samp. # / Samp. depth	PID (ppm)	Blows per 6 in.	Depth (feet)	USCS Log	Description
	SS	24/24	39		0	WOH	40		
						WOH			Gry silty CLAY, tr f-gry sand, soft - wet
						WOH	41		
						WOH			
	SS	24/24	39		0	WOR	42		**2-Aug-07**
						WOR			Gry silty CLAY
						WOH	43		6" layer w/tr gry f-sand at 43' 2" - soft, wet
						WOH			
	SS	24/24	44		0	WOR	44		
						1			Gry silty CLAY, bott 6" tr gry f-sand, soft - wet
						2	45		
						2			
	SS	24/24	44		0	1	46		
						WOH			Gry silty CLAY,
						1	47		4" layer w/tr gry f-sand at 47', soft - wet
						1			
	SS	24/24	44		0	WOH	48		
						1			Gry silty CLAY
						4	49		Top 8" tr gry f-sand, soft - wet
						3			
	SS	24/22	49		0	WOR	50		
						WOH			Gry silty CLAY,
						WOH	51		Bott 4" tr gry f-sand, soft - wet
						3			
	SS	24/23	49		0	WOR	52		
						WOR			Gry silty CLAY, soft - wet
						WOH	53		
						WOH			
	SS	24/24	54		0	5	54		
						3			Gry f-SAND, tr silt
						2	55		Bott 3" gry SILT, some f-sand - wet
						1			
	SS	24/24	54		0	WOR	56		
						WOR			Top 11" gry f-SAND, tr silt
						2	57		12" layer gry SILT, some clay, soft
						10			Bott 2" gry f-SAND, tr silt - wet
	SS	24/24	54		0	6	58		
						1			Gry f-SAND, little med sand
						1	59		Bott 10" gry SILT, little clay, soft - wet
						7			

Logged by: J. Donovan
Drilling Contractor: East Coast Explorations
Date: 1-Aug-07
Driller: C. Palmer

WELL SPECIFICATIONS:
Diam. of casing: 4"
BOH: 82 ft
Screen Interval: 65-75 ft
Riser Interval: 65-0 ft
Sandpack: 76-63 ft
Bentonite: 63-61 ft
Grout: 61-2 ft
Cover: Conc. Pad, Stick up

Environmental Chemical Corporation

LOG OF SOIL BORING

Coordinates: X-4859643.21, Y-425913.70
Surface Elevation: 34.48
Casing Below Surface:
Reference Elevation: 36.30
Reference Description: Top PVC Riser

Job. No. 5700.007 | Client NAVFAC | Location: EW-05B - NASB Eastern Plume
Drilling Method: Drive and Wash - 4" Casing | Boring No. EW-05B PZ-1
Sampling Method: 2 in. dia. 2 ft Split Spoon, 140 lb drop weight | Sheet 4 of 5
Drilling

Water Lev.					Start	Finish
Time					1-Aug-07	2-Aug-07
Date						
Reference						

Surface Conditions: Grass

Digital Picture #	Sample Type	In. Drvn / In. Recvrd	Dpth. Csg.	Samp. # / Samp. depth	PID (ppm)	Blows per 6 in.	Depth (feet)	USCS Log	
	SS	24/22	59		0	WOR	60		
						2			Top 8" gry f-med SAND -9" layer gry silt, some gry f-sand
						3	61		Bott 6" gry SILT, tr gry f-sand - wet
						2			
	SS	24/24	59		0	WOR	62		
						WOR			Gry silty CLAY, tr gry f-sand bott 4", soft - wet
						WOR	63		
						4			
	SS	24/20	64		0	2	64		
						7			Top 8" gry silty CLAY, little gry f-sand, 9" layer gry f-med SAND - wet
						8	65		Bott 3" gry silty CLAY, little gry f-sand
						7			
	SS	24/24	64		0	WOR	66		
						2			Top 6" gry f-med SAND, 4" layer gry silty CLAY, tr gry f-sand
						3	67		Bott 14" lt brn f-SAND, tr silt, some motteling - wet
						8			
	SS	24/14	64		0	WOR	68		
						8			Lt brn f-SAND, tr silt, some motteling - wet
						14	69		
						16			
	SS	24/21	69		0	2	70		
						7			Lt brn f-SAND, tr silt, some motteling - wet
						21	71		
						24			
	SS	24/15	69		0	7	72		
						12			Lt brn/gry f-SAND, little red motteling - wet
						16	73		Bott 4" gry CLAY, tr brn/red f-sand
						18			
	SS	24/11	74		0	WOR	74		
						WOR			Gry f-med SAND, tr clay - wet
						WOH	75		Bott 1" gry CLAY, tr gry f-sand
						2			
	SS	24/11	76		0	WOR	76		
						WOR			Gry f-SAND - wet
						1	77		
						2			
	SS	24/15	76		0	WOR	78		
						3			Gry f-SAND - wet
						5	79		
						7			

Logged by: J. Donovan | Date: 1-Aug-07
Drilling Contractor: East Coast Explorations | Driller: C. Palmer

WELL SPECIFICATIONS:

Diam. of casing: 4" | Screen Interval: 65-75 ft | Sandpack: 76-63 ft | Grout: 61-2 ft
BOH: 82 ft | Riser Interval: 65-0 ft | Bentonite: 63-61 ft | Cover: Conc. Pad, Stick up

Environmental Chemical Corporation

LOG OF SOIL BORING

Coordinates: X-4859643.21, Y-425913.70
Surface Elevation: 34.48
Casing Below Surface:
Reference Elevation: 36.30
Reference Description: Top PVC Riser

Job. No. 5700.007 | Client NAVFAC | Location: EW-05B - NASB Eastern Plume

Drilling Method: Drive and Wash - 4" Casing | Boring No. EW-05B PZ-1

Sampling Method: 2 in. dia. 2 ft Split Spoon, 140 lb drop weight | Sheet 5 of 5

Drilling: Start 1-Aug-07, Finish 2-Aug-07

Water Lev.				
Time				
Date				
Reference				

Surface Conditions: Grass

Digital Picture #	Sample Type	In. Drvn / In. Recvrd	Dpth. Csg.	Samp. # / Samp. depth	PID (ppm)	Blows per 6 in.	Depth (feet)	USCS Log	
	SS	24/18	79		0	1	80		
						4			Gry CLAY - wet
						7	81		
						12			
							82		End of boring at 82 ft.
							83		
							84		
							85		
							86		
							87		
							88		
							89		
							90		
							91		
							92		
							93		
							94		
							95		
							96		
							97		
							98		
							99		

Logged by: J. Donovan | Date: 1-Aug-07
Drilling Contractor: East Coast Explorations | Driller: C. Palmer

WELL SPECIFICATIONS:

Diam. of casing: 4" | Screen Interval: 65-75 ft | Sandpack: 76-63 ft | Grout: 61-2 ft
BOH: 82 ft | Riser Interval: 65-0 ft | Bentonite: 63-61 ft | Cover: Conc. Pad, Stick up

Environmental Chemical Corporation

LOG OF SOIL BORING

Coordinates: X-4859648.57, Y-425898.90
Surface Elevation: 35.45
Casing Below Surface:
Reference Elevation: 37.46
Reference Description: Top PVC Riser

Job. No. 5700.007 | Client NAVFAC | Location: EW-05B - NASB Eastern Plume

Drilling Method: Drive and Wash - 4" Casing | Boring No. EW-05B PZ-2

Sampling Method: 2 in. dia. 2 ft Split Spoon, 140 lb drop weight | Sheet 1 of 4

Drilling

Water Lev.					Start	Finish
Time					3-Aug-07	6-Aug-07
Date						
Reference						

Surface Conditions: Grass

Digital Picture #	Sample Type	In. Drvn / In. Recvrd	Dpth. Csg.	Samp. # / Samp. depth	PID (ppm)	Blows per 6 in.	Depth (feet)	USCS Log	
	SS	24/19	0		0	3	0		
						4			Top 8" brn SILT little f-sand
						4	1		Bott 11" lt brn f-SAND, damp
						5			
	SS	24/17	0		0	4	2		
						5			Lt brn f-SAND, tr silt, damp
						5	3		Bott 4" red motteling
						6			
	SS	24/18	0		0	7	4		
						7			Lt brn f-SAND, damp
						7	5		
						8			
	SS	24/18	0		0	7	6		
						7			Lt brn f-SAND, damp
						9	7		
						16			
	SS	24/21	0		0	12	8		
						10			Lt brn f-SAND, damp
						10	9		
						9			
	SS	24/18	9		0	4	10		
						7			Brn f-med SAND, little red motteling - wet
						6	11		
						7			
	SS	24/13	9		0	5	12		
						5			Brn f-SAND, red laminations- wet
						8	13		
						12			
	SS	24/18	14		0	4	14		
						6			Top 11" brn f-SAND
						6	15		Bott 7" f-med brn SAND - wet
						7			
	SS	24/10	14		0	7	16		
						8			Brn f-SAND, red laminations in bott 2" - wet
						9	17		
						10			
	SS	24/15	14		0	7	18		
						14			Top 6" brn f-med SAND, 4" layer brn/red SILT, tr f-sand
						14	19		Bott 5" red f-med SAND, tr silt - wet
						17			

Logged by: J. Donovan | Date: 3-Aug-07 | WOR = Weight of Rods
Drilling Contractor: East Coast Explorations | Driller: C. Palmer | WOH = Weight of Hammer

WELL SPECIFICATIONS:

Diam. of casing: 4" | Screen Interval: 65-75 ft | Sandpack: 76-63 ft | Grout: 61-2 ft
BOH: 78 ft | Riser Interval: 65-0 ft | Bentonite: 63-61 ft | Cover: Conc. Pad, Stick up

Environmental Chemical Corporation

LOG OF SOIL BORING

Coordinates: X-4859648.57, Y-425898.90
Surface Elevation: 35.45
Casing Below Surface:
Reference Elevation: 37.46
Reference Description: Top PVC Riser

Job. No. 5700.007 | Client NAVFAC | Location: EW-05B - NASB Eastern Plume

Drilling Method: Drive and Wash - 4" Casing | Boring No. EW-05B PZ-2

Sampling Method: 2 in. dia. 2 ft Split Spoon, 140 lb drop weight | Sheet 2 of 4

Drilling: Start 3-Aug-07, Finish 6-Aug-07

Water Lev.				
Time				
Date				
Reference				

Surface Conditions: Grass

Digital Picture #	Sample Type	In. Drvn / In. Recvrd	Dpth. Csg.	Samp. # / Samp. depth	PID (ppm)	Blows per 6 in.	Depth (feet)	USCS Log	
	SS	24/12	19		0	5	20		
						7			Top 3" brn f-SAND, tr silt
						11	21		Bott 9" brn SILT, tr f-sand, little red motteling - wet
						12			
	SS	24/16	19		0	3	22		
						11			Top 7" brn SILT, tr f-sand, motteled
						12	23		Bott 9" brn f-SAND, red laminations - wet
						13			
	SS	24/16	24		0	9	24		Top 8" brn f-SAND, motteled
						15			3" layer brn/red silt, tr f-sand
						25	25		Bott 5" brn f-SAND, motteled - wet
						25			
	SS	24/17	24		0	12	26		
						12			Top 9" brn f-SAND, red laminations, 5" layer brn/red SILT, tr f-SAND
						15	27		Bott 2" gry SILT, tr f-sand - wet
						18			
	SS	24/15	24		0	5	28		
						4			Top 7" gry f-SAND tr gry silt
						2	29		Bott 8" gry silty CLAY, soft - wet
						2			
	SS	24/17	29		0	WOR	30		
						4			Top 5" gry silty CLAY, soft. 5" layer gry SILT, tr clay, tr gry f-sand, soft - wet
						3	31		Bott 7" gry clayey SILT - wet
						1			
	SS	24/14	29		0	WOR	32		
						WOH			Top 10" gry clayey SILT
						WOH	33		Bott 4" gry silty CLAY, soft - wet
						1			
	SS	24/22	34		0	WOR	34		
						WOR			Gry silty CLAY, soft - wet
						WOR	35		
						WOR			
	SS	24/19	34		0	WOR	36		
						WOR			Gry silty CLAY, soft - wet
						WOH	37		Bott 5" gry clayey SILT - wet
						WOH			
	SS	24/13	34		0	WOR	38		
						WOR			Top 4" gry clayey SILT, soft
						WOH	39		Bott 9" gry silty CLAY, soft - wet
						WOH			

Logged by: J. Donovan | Date: 3-Aug-07
Drilling Contractor: East Coast Explorations | Driller: C. Palmer

WELL SPECIFICATIONS:

Diam. of casing: 4" | Screen Interval: 65-75 ft | Sandpack: 76-63 ft | Grout: 61-2 ft
BOH: 78 ft | Riser Interval: 65-0 ft | Bentonite: 63-61 ft | Cover: Conc. Pad, Stick up

Environmental Chemical Corporation

LOG OF SOIL BORING

Coordinates: X 4859648.57, Y-425898.90
Surface Elevation: 35.45
Casing Below Surface:
Reference Elevation: 37.46
Reference Description: Top PVC Riser

Job. No. 5700.007 | Client NAVFAC | Location: EW-05B - NASB Eastern Plume

Drilling Method: Drive and Wash - 4" Casing | Boring No. EW-05B PZ-2

Sampling Method: 2 in. dia. 2 ft Split Spoon, 140 lb drop weight | Sheet 3 of 4

Drilling

Water Lev.					Start	Finish
Time					3-Aug-07	6-Aug-07
Date						
Reference						

Surface Conditions: Grass

Digital Picture #	Sample Type	In. Drvn / In. Recvrd	Dpth. Csg.	Samp. # / Samp. depth	PID (ppm)	Blows per 6 in.	Depth (feet)		USCS Log	
	SS	24/16	39		0	WOR	40			6-Aug-09
						WOR				Gry silty CLAY, soft - wet
						WOR	41			
						WOR				
	SS	24/24	39		0	WOR	42			
						WOR				Gry silty CLAY, soft - wet
						WOH	43			
						WOH				
	SS	24/22	44		0	WOR	44			
						WOR				Gry silty CLAY, soft - wet
						WOH	45			
						WOH				
	SS	24/24	44		0	WOH	46			
						3				Gry silty CLAY, soft - wet
						2	47			Bott 3" tr gry f-sand - wet
						1				
	SS	24/24	44		0	WOR	48			
						2				Top 7" gry f-SAND, tr silt
						3	49			9" layer gry silty CLAY, soft
						1				Bott 8" gry SILT, tr gry f-sand - wet
	SS	24/19	49		0	2	50			
						2				Gry SILT, tr f-SAND, tr clay, soft - wet
						2	51			
						1				
	SS	24/22	49		0	WOR	52			
						WOH				Gry silty CLAY, soft - wet, top 4" tr- gry f-sand
						1	53			
						1				
	SS	24/23	54		0	WOR	54			
						1				Gry silty CLAY, soft - wet
						1	55			Bott 9" gry f-SAND, tr silt - wet
						2				
	SS	24/22	54		0	2	56			
						1				Top 4" gry f-SAND, tr silt - wet
						2	57			3" layer gry SILT, tr gry f-sand
						14				10" layer gry silty CLAY, bott 5" gry f-SAND
	SS	24/23	54		0	1	58			
						2				Top 12" gry f-SAND
						3	59			9" layer gry SILT, tr clay
						3				Bott 4" gry f-SAND, tr silt

Logged by: J. Donovan | Date: 6-Aug-07
Drilling Contractor: East Coast Explorations | Driller: C. Palmer

WELL SPECIFICATIONS:

Diam. of casing: 4" | Screen Interval: 65-75 ft | Sandpack: 76-63 ft | Grout: 61-2 ft
BOH: 78 ft | Riser Interval: 65-0 ft | Bentonite: 63-61 ft | Cover: Conc. Pad, Stick up

Environmental Chemical Corporation

LOG OF SOIL BORING

Coordinates: X-4859648.57, Y-425898.90
Surface Elevation: 35.45
Casing Below Surface:
Reference Elevation: 37.46
Reference Description: Top PVC Riser

Job. No. 5700.007 | Client NAVFAC | Location: EW-05B - NASB Eastern Plume

Drilling Method: Drive and Wash - 4" Casing | Boring No. EW-05B PZ-2

Sampling Method: 2 in. dia. 2 ft Split Spoon, 140 lb drop weight | Sheet 4 of 4

Drilling: Start 3-Aug-07 | Finish 6-Aug-07

Water Lev.				
Time				
Date				
Reference				

Surface Conditions: Grass

Digital Picture #	Sample Type	In. Drvn / In. Recvrd	Dpth. Csg.	Samp. # / Samp. depth	PID (ppm)	Blows per 6 in.	Depth (feet)	USCS Log	
	SS	24/24	59		0	1	60		
						1			Top 8" gry f-med SAND -9" layer gry silt, some gry f-sand
						1	61		Bott 6" gry SILT, tr gry f-sand - wet
						1			
	SS	24/24	59		0	WOR	62		
						WOR			Gry silty CLAY, tr gry f-sand bott 4", soft - wet
						WOH	63		
						WOH			
	SS	24/24	64		0	3	64		
						3			Top 8" gry silty CLAY, little gry f-sand, 9" layer gry f-med SAND - wet
						7	65		Bott 3" gry silty CLAY, little gry f-sand
						13			
	SS	2416	64		0	6	66		
						18			Top 6" gry f-med SAND, 4" layer gry silty CLAY, tr gry f-sand
						28	67		Bott 14" lt brn f-SAND, tr silt, some motteling - wet
						34			
	SS	24/24	64		0	9	68		
						13			Lt brn f-SAND, tr silt, some motteling - wet
						30	69		
						44			
	SS	24/13	69		0	2	70		
						11			Lt brn f-SAND, tr silt, some motteling - wet
						20	71		
						23			
	SS	24/24	69		0	6	72		
						13			Lt brn/gry f-SAND, little red motteling - wet
						16	73		Bott 4" gry CLAY, tr brn/red f-sand
						14			
	SS	24/19	74		0	6	74		
						10			Gry f-med SAND, tr clay - wet
						11	75		Bott 1" gry CLAY, tr gry f-sand
						11			
	SS	24/24	76		0	3	76		
						6			Gry f-SAND - wet
						3	77		
						5			
							78		
									Bottom of boring 78 ft
							79		

Logged by: J. Donovan | Date: 6-Aug-07
Drilling Contractor: East Coast Explorations | Driller: C. Palmer

WELL SPECIFICATIONS:

Diam. of casing: 4" | Screen Interval: 65-75 ft | Sandpack: 76-63 ft | Grout: 61-2 ft
BOH: 78 ft | Riser Interval: 65-0 ft | Bentonite: 63-61 ft | Cover: Conc. Pad, Stick up

Environmental Chemical Corporation

LOG OF SOIL BORING

Coordinates: X-4859617.30, Y-425939.74
Surface Elevation: 33.06
Casing Below Surface:
Reference Elevation: 35.46
Reference Description: Top PVC Riser

Job. No. 5700.007 | Client NAVFAC | Location: EW-05B - NASB Eastern Plume

Drilling Method: Drive and Wash - 4" Casing | Boring No. EW-05B PZ-3

Sampling Method: 2 in. dia. 2 ft Split Spoon, 140 lb drop weight | Sheet 1 of 4

Water Lev.					Drilling Start	Finish
Time					8-Aug-07	8-Aug-07
Date						
Reference						

Surface Conditions: Grass

Digital Picture #	Sample Type	In. Drvn / In. Recvrd	Dpth. Csg.	Samp. # / Samp. depth	PID (ppm)	Blows per 6 in.	Depth (feet)	USCS Log	
	SS	24/18	0			4	0		
						4			Top 8" brn SILT little f-sand
						4	1		Bott 10" lt brn f-SAND, damp
						6			
	SS	24/17	0			4	2		
						7			Lt brn f-SAND, tr silt, damp
						6	3		Bott 8" red motteling
						6			
	SS	24/15	0			6	4		
						6			Lt brn f-SAND, damp
						8	5		
						9			
	SS	24/20	0			6	6		
						8			Lt brn f-SAND, damp
						7	7		Bott 6" wet
						8			
	SS	24/22	0			5	8		
						4			Top 6" brn f-SAND - wet
						4	9		Bott 16" f-med brn SAND, little rust colored motteling - wet
						6			
	SS	24/10	9			4	10		
						8			Top 4" brn f-SAND, bott 3" red laminations - wet
						8	11		4" layer lt brn f-sand, motteled - wet
						7			Bott 2" red/brn SILT, tr f-sand
	SS	24/10	9			4	12		
						8			Lt brn f-med SAND, bott 3" red laminations - wet
						8	13		
						8			
	SS	24/14	14			6	14		
						5			Lt brn f-SAND, red motteling - wet
						6	15		
						6			
	SS	24/12	14			6	16		
						5			Lt brn f-SAND, red laminations in bott 6" - wet
						7	17		
						7			
	SS	24/18	14			6	18		
						8			Top 4" lt brn f-SAND, 3" layer brn SILT
						9	19		2" layer brn/red f-sand,
						8			Bott 8" brn SILT, tr f-sand, motteled - wet. Trace gry CLAY in nose

Logged by: J. Donovan | Date: 8-Aug-07 | WOR = Weight of Rods
Drilling Contractor: East Coast Explorations | Driller: C. Palmer | WOH = Weight of Hammer
WELL SPECIFICATIONS: | PID not working
Diam. of casing: 4" | Screen Interval: 62-52 ft | Sandpack: 64-50 ft | Grout: 48-2 ft
BOH: 64 ft 6 inches | Riser Interval: 52-0 ft | Bentonite: 50-48 ft | Cover: Conc. Pad, Stick up

Environmental Chemical Corporation

LOG OF SOIL BORING

Coordinates: X-4859617.30, Y-425939.74
Surface Elevation: 33.06
Casing Below Surface:
Reference Elevation: 35.46
Reference Description: Top PVC Riser

Job. No. 5700.007 | Client NAVFAC | Location: EW-05B - NASB Eastern Plume

Drilling Method: Drive and Wash - 4" Casing | Boring No. EW-05B PZ-3

Sampling Method: 2 in. dia. 2 ft Split Spoon, 140 lb drop weight | Sheet 2 of 4

Water Lev.					Drilling Start	Drilling Finish
Time					8-Aug-07	8-Aug-07
Date						
Reference						

Surface Conditions: Grass

Digital Picture #	Sample Type	In. Drvn / In. Recvrd	Dpth. Csg.	Samp. # / Samp. depth	PID (ppm)	Blows per 6 in.	Depth (feet)	USCS Log	
	SS	24/16	19			6	20		
						7			Top 8" brn SILT, tr clay, red motteling
						9	21		Bott 8" brn f-SAND - wet
						8			
	SS	24/12	19			3	22		
						11			Lt brn f-SAND tr silt - wet
						12	23		Bott 2" brn SILT, tr clay, motteled
						13			
	SS	24/18	24			9	24		Top 3" brn silty CLAY
						15			7" layer brn f-SAND, motteled - wet
						25	25		Bott 3" brn silty CLAY
						25			
	SS	24/20	24			12	26		
						12			Top 4" gry f-SAND
						15	27		Bott 16" gry silty CLAY, soft - wet
						18			
	SS	24/20	24			5	28		
						4			Top 8" gry silty CLAY, soft
						2	29		2" layer gry SILT, tr gry f-sand - wet
						2			Bott 10" gry silty CLAY, soft - wet
	SS	24/24	29			WOR	30		
						4			Gry silty CLAY, soft - wet
						3	31		
						1			
	SS	24/8	29			WOR	32		
						WOH			Gry silty CLAY, soft - wet
						WOH	33		
						1			
	SS	24/22	34			WOR	34		
						WOR			Gry silty CLAY, soft - wet
						WOR	35		
						WOR			
	SS	24/20	34			WOR	36		
						WOR			Top 6" gry silty CLAY
						WOH	37		4" layer gry CLAY
						WOH			Bott 10 " gry silty CLAY, soft - wet
	SS	24/24	34			WOR	38		
						WOR			Gry silty CLAY, soft - wet
						WOH	39		
						WOH			

Logged by: J. Donovan | Date: 8-Aug-07
Drilling Contractor: East Coast Explorations | Driller: C. Palmer | PID not working

WELL SPECIFICATIONS:

Diam. of casing: 4" | Screen Interval: 52-62 ft | Sandpack: 62-50 ft | Grout: 48-2 ft
BOH: 64 ft 6 inches | Riser Interval: 52-0 ft | Bentonite: 50-48 ft | Cover: Conc. Pad, Stick up

Environmental Chemical Corporation

LOG OF SOIL BORING

Coordinates: X-4859617.30, Y-425939.74
Surface Elevation: 33.06
Casing Below Surface:
Reference Elevation: 35.46
Reference Description: Top PVC Riser

Job. No. 5700.007 | Client NAVFAC | Location: EW-05B - NASB Eastern Plume
Drilling Method: Drive and Wash - 4" Casing | Boring No. EW-05B PZ-3
Sampling Method: 2 in. dia. 2 ft Split Spoon, 140 lb drop weight | Sheet 3 of 4

Water Lev.					Drilling Start	Drilling Finish
Time					8-Aug-07	8-Aug-07
Date						
Reference						

Surface Conditions: Grass

Digital Picture #	Sample Type	In. Drvn / In. Recvrd	Dpth. Csg.	Samp. # / Samp. depth	PID (ppm)	Blows per 6 in.	Depth (feet)		USCS Log	
	SS	24/18	39		0	WOR	40			
						WOR				Gry silty CLAY, soft - wet
						WOR	41			
						WOR				
	SS	24/23	39		0	WOR	42			
						WOR				Gry silty CLAY, soft - wet
						WOH	43			Bott 2" tr f-sand
						WOH				
	SS	24/13	44		0	WOR	44			
						WOR				Gry silty CLAY, soft - wet
						WOH	45			
						WOH				
	SS	24/20	44		0	WOH	46			
						3				Gry silty CLAY, soft - wet
						2	47			Bott 4" fry CLAY
						1				
	SS	24/24	44		0	WOR	48			
						2				Gry CLAY, intermittent silt lenses, soft - wet
						3	49			
						1				
	SS	24/24	49		0	2	50			
						2				Top 12" gry CLAY, silt lenses, soft
						2	51			3" layer gry f-SAND, silt layer at 51'
						1				Bott 9" gry silty CLAY, soft - wet
	SS	24/24	49		0	WOR	52			
						WOH				Gry CLAY, soft - wet
						1	53			
						1				
	SS	24/16	54		0	WOR	54			
						1				Gry CLAY, soft - wet
						1	55			Bott 9" gry f-SAND, tr silt - wet
						2				
	SS	24/18	54		0	2	56			
						1				Gry CLAY, soft - wet
						2	57			
						14				
	SS	24/24	54		0	1	58			
						2				Gry CLAY, soft - wet
						3	59			2" layer gry CLAY, tr gry f-sand at 58' 3"
						3				

Logged by: J. Donovan | Date: 8-Aug-07
Drilling Contractor: East Coast Explorations | Driller: C. Palmer

WELL SPECIFICATIONS:

Diam. of casing: 4" | Screen Interval: 52-62 ft | Sandpack: 62-50 ft | Grout: 48-2 ft
BOH: 64 ft 6 inches | Riser Interval: 52-0 ft | Bentonite: 50-48 ft | Cover: Conc. Pad, Stick up

Environmental Chemical Corporation

LOG OF SOIL BORING

Coordinates: X-4859617.30, Y-425939.74
Surface Elevation: 33.06
Casing Below Surface:
Reference Elevation: 35.46
Reference Description: Top PVC Riser

Job. No. 5700.007 | Client NAVFAC | Location: EW-05B - NASB Eastern Plume

Drilling Method: Drive and Wash - 4" Casing | Boring No. EW-05B PZ-3

Sampling Method: 2 in. dia. 2 ft Split Spoon, 140 lb drop weight | Sheet 4 of 4

Water Lev.					Drilling Start	Finish
Time					8-Aug-07	8-Aug-07
Date						
Reference						

Surface Conditions: Grass

Digital Picture #	Sample Type	In. Drvn / In. Recvrd	Dpth. Csg.	Samp. # / Samp. depth	PID (ppm)	Blows per 6 in.	Depth (feet)	USCS Log	
	SS	24/22	59			5	60		
						17			Top 12" gry CLAY, soft - wet
						12	61		10" layer gry f-med SAND, bits of blk rock/quartz
						50/0			Refusal at 62 ft
	SS	NR	59				62		
									Roller bit to 64' 6"
							63		
	SS						64		
									End of boring at 64' 6"
							65		
	SS						66		
							67		
	SS						68		
							69		
	SS						70		
							71		
	SS						72		
							73		
	SS						74		
							75		
	SS						76		
							77		
							78		
							79		

Logged by: J. Donovan | Date: 8-Aug-07
Drilling Contractor: East Coast Explorations | Driller: C. Palmer | PID not working

WELL SPECIFICATIONS:

Diam. of casing: 4" | Screen Interval: 52-62 ft | Sandpack: 62-50 ft | Grout: 48-2 ft
BOH: 64 ft 6 inches | Riser Interval: 52-0 ft | Bentonite: 50-48 ft | Cover: Conc. Pad, Stick up

Environmental Chemical Corporation

LOG OF SOIL BORING

Coordinates: Not surveyed
Surface Elevation:
Casing Below Surface:
Reference Elevation:
Reference Description: Top PVC Riser

Job. No. 5700.007	Client NAVFAC	Location: EW-05B - NASB Eastern Plume	
Drilling Method: Drive and Wash - 4" Casing		Boring No. EW-05B PZ-4	
Sampling Method: 2 in. dia. 2 ft Split Spoon, 140 lb drop weight		Sheet 1 of 3	
		Drilling	
Water Lev.		Start	Finish
Time		9-Aug-07	9-Aug-07
Date			
Reference			

Surface Conditions: Grass

Digital Picture #	Sample Type	In. Drvn / In. Recvrd	Dpth. Csg.	Samp. # / Samp. depth	PID (ppm)	Blows per 6 in.	Depth (feet)	USCS Log	
	SS	24/16	0			3	0		
						4			Top 5 " drk brn SITL, tr f-sand
						4	1		Bott 11" red/brn f-SAND, tr silt
						6			
	SS	24/13	0			5	2		
						6			Lt brn f-SAND, tr silt, damp
						6	3		
						8			
	SS	24/23	0			6	4		
						7			Top 7" brn f-SAND, tr silt
						8	5		11" layer brn SILT, tr f-sand
						10			Bott 5" lt brn f-SAND
	SS	24/23	0			10	6		
						6			Lt brn f-SAND, damp
						6	7		Red motteling in nose
						5			
	SS	24/18	0			5	8		
						5			Brn f-SAND, tr med-sand, tr silt
						6	9		Bits of mica in sample
						4			Bott 7" wet
	SS	24/13	9			2	10		
						6			Lt brn f-SAND, little red motteling - wet
						8	11		
						9			
	SS	24/9	9			4	12		
						5			Brn f-SAND, bits of mica in sample - wet
						6	13		
						6			
	SS	24/14	14			7	14		
						7			Brn f-SAND, red laminations - wet
						8	15		
						11			
	SS	24/13	14			6	16		
						8			Brn f-SAND, bott 3" red motteling - wet
						8	17		
						9			
	SS	24/16	14			4	18		
						6			Top 9" brn f-SAND, motteled
						8	19		1" layer gry/brn silty CLAY
						8			Bott 6" brn f-SAND, motteled - wet

Logged by: J. Donovan
Date: 9-Aug-07
WOR = Weight of Rods
Drilling Contractor: East Coast Explorations
Driller: C. Palmer
WOH = Weight of Hammer
WELL SPECIFICATIONS: **Well not installed - no evidence of lower sand unit**
PID not working
Diam. of casing: 4"
Screen Interval:
Sandpack:
Grout:
BOH: 53 ft 6 inches
Riser Interval:
Bentonite:
Cover:

Environmental Chemical Corporation

LOG OF SOIL BORING

Coordinates: Not surveyed
Surface Elevation:
Casing Below Surface:
Reference Elevation:
Reference Description: Top PVC Riser

Job. No. 5700.007 | Client NAVFAC | Location: EW-05B - NASB Eastern Plume

Drilling Method: Drive and Wash - 4" Casing | Boring No. EW-05B PZ-4

Sampling Method: 2 in. dia. 2 ft Split Spoon, 140 lb drop weight | Sheet 2 of 3

Drilling: Start 9-Aug-07 | Finish 9-Aug-07

Water Lev.				
Time				
Date				
Reference				

Surface Conditions: Grass

Digital Picture #	Sample Type	In. Drvn / In. Recvrd	Dpth. Csg.	Samp. # / Samp. depth	PID (ppm)	Blows per 6 in.	Depth (feet)	USCS Log	
	SS	24/16	19			3	20		
						4			Top 2" gry/brn silty CLAY
						4	21		Bott 14" brn f-SAND, bits of mica in sample - wet
						5			
	SS	24/8	19			4	22		
						5			Brn f-SAND, little red motteling - wet
						6	23		
						7			
	SS	24/16	24			4	24		Top 2" gry/brn silty CLAY, 2" layer brn f-SAND, 3" layer gry/brn silty CLAY
						8			Bott 2" brn f-SAND, red laminations - wet
						6	25		
						5			
	SS	24/20	24			WOR	26		
						1			Top 2" f-SAND, red laminations
						5	27		11" layer gry silty CLAY
						3			Bott 7" gry SILT, tr f-sand - wet
	SS	24/22	24			WOH	28		
						WOH			Gry silty CLAY
						WOH	29		Bott 6" gry SILT, tr f-sand, tr clay - wet
						WOH			
	SS	24/14	29			WOR	30		
						WOR			Gry CLAY, silt lenses, med stiff - wet
						WOR	31		
						WOR			
	SS	24/19	29			WOR	32		
						WOR			Gry CLAY, 1' 5" silt/clay lens at 33' 3" - wet
						WOR	33		
						WOR			
	SS	24/18	34			WOH	34		
						WOH			Gry silty CLAY, med stiff - wet
						WOH	35		
						WOH			
	SS	24/16	34			WOR	36		
						WOR			Gry silty CLAY, med stiff - wet
						WOR	37		
						WOR			
	SS	24/24	34			WOR	38		
						WOR			Gry silty CLAY, med stiff - wet
						WOR	39		
						WOR			

Logged by: J. Donovan | Date: 9-Aug-07
Drilling Contractor: East Coast Explorations | Driller: C. Palmer | PID not working

WELL SPECIFICATIONS: **Well not installed - no evidence of lower sand unit**

Diam. of casing: 4" | Screen Interval: | Sandpack: | Grout:
BOH: 53 ft 6 inches | Riser Interval: | Bentonite: | Cover:

Environmental Chemical Corporation

LOG OF SOIL BORING

Coordinates: Not surveyed
Surface Elevation:
Casing Below Surface:
Reference Elevation:
Reference Description: Top PVC Riser

Job. No. 5700.007 | Client NAVFAC | Location: EW-05B - NASB Eastern Plume

Drilling Method: Drive and Wash - 4" Casing | Boring No. EW-05B PZ-4

Sampling Method: 2 in. dia. 2 ft Split Spoon, 140 lb drop weight | Sheet 3 of 3

Water Lev.					Drilling Start	Drilling Finish
Time					9-Aug-07	9-Aug-07
Date						
Reference						

Surface Conditions: Grass

Digital Picture #	Sample Type	In. Drvn / In. Recvrd	Dpth. Csg.	Samp. # / Samp. depth	PID (ppm)	Blows per 6 in.	Depth (feet)	USCS Log	
	SS	24/24	39		0	WOR	40		
						WOR			Gry silty CLAY, med stiff - wet
						WOH	41		
						WOH			
	SS	24/22	39		0	WOR	42		
						WOR			Gry silty CLAY, med stiff - wet
						WOR	43		
						WOR			
	SS	24/21	44		0	1	44		
						1			Gry silty CLAY, med stiff - wet
						1	45		
						1			
	SS	24/11	44		0	WOH	46		
						WOH			Gry silty CLAY, med stiff - wet
						WOH	47		
						WOH			
	SS	24/5	44		0	WOR	48		
						WOR			Gry silty CLAY, med stiff - wet
						WOR	49		
						WOR			
	SS	24/18	49		0	WOR	50		
						WOR			Gry silty CLAY, med stiff - wet
						WOR	51		
						WOR			
	SS	24/22	49		0	WOR	52		
						WOR			Gry CLAY, soft - wet
						5/3	53		1" lens gry f-SAND at 53'
						50/0			Bott 8" gry CLAY, bits of rock in nose. Refusal at 53' 6"
	SS						54		
									End of boring at 53' 6"
							55		
	SS						56		
							57		
	SS						58		
							59		

Logged by: J. Donovan | Date: 9-Aug-07
Drilling Contractor: East Coast Explorations | Driller: C. Palmer
WELL SPECIFICATIONS: **Well not installed - no evidence of lower sand unit**
Diam. of casing: 4" | Screen Interval: | Sandpack: | Grout:
BOH: 53 ft 6 inches | Riser Interval: | Bentonite: | Cover:

Environmental Chemical Corporation

LOG OF SOIL BORING

Coordinates: X-4859711.29, Y-425934.62
Surface Elevation: 34.94
Casing Below Surface:
Reference Elevation: 37.26
Reference Description: Top PVC Riser

Job. No. 5700.007 | Client NAVFAC | Location: EW-05B - NASB Eastern Plume

Drilling Method: Drive and Wash - 4" Casing | Boring No. EW-05B PZ-4A

Sampling Method: 2 in. dia. 2 ft Split Spoon, 140 lb drop weight | Sheet 1 of 4

Drilling: Start 10-Aug-07, Finish 14-Aug-07

Water Lev.				
Time				
Date				
Reference				

Surface Conditions: Grass

Digital Picture #	Sample Type	In. Drvn / In. Recvrd	Dpth. Csg.	Samp. # / Samp. depth	PID (ppm)	Blows per 6 in.	Depth (feet)	USCS Log	
	SS	24/18	0		0	2	0		
						3			Top 3" drk brn SILT f-med sand
						4	1		Bott 15" brn f-SAND
						4			
	SS	24/17	0		0	4	2		
						4			Brn f-med SAND
						5	3		
						6			
	SS	24/19	0		0	6	4		
						6			Top 3" brn f-med SAND, 7" layer brn SILT, tr f-sand
						6	5		Bott 9" lt brn f-SAND
						7			
	SS	24/18	0		0	7	6		
						6			Top 4" brn f-SAND, red motteling
						7	7		6" layer lt brn f-SAND, motteled
						7			Bott 8" brn/red f-SAND, bott 2" wet
	SS	24/22	0		0	7	8		
						8			Top 8" brn/red f-SAND, motteled
						10	9		3" layer brn SILT, tr f-sand
						10			Bott 11" brn f-SAND, tr silt, motteled - wet
	SS	24/15	9		0	6	10		
						9			Brn f-SAND, red laminations - wet
						7	11		
						8			
	SS	24/16	9		0	7	12		
						7			Top 3" brn/red f-SAND, 8" layer brn SILT, motteled
						8	13		Bott 5" brn f-SAND, motteled - wet
						10			
	SS	24/18	14		0	9	14		**13-Aug-09**
						12			Brn f-SAND, tr silt, red motteling - wet
						15	15		
						11			
	SS	24/17	14		0	9	16		
						15			Brn f-SAND, tr silt, red motteling - wet
						14	17		
						15			
	SS	24/12	14		0	6	18		
						6			Brn f-SAND - wet
						6	19		
						7			

Logged by: J. Donovan | Date: 10-Aug-07 | WOR = Weight of Rods
Drilling Contractor: East Coast Explorations | Driller: C. Palmer | WOH = Weight of Hammer

WELL SPECIFICATIONS: **PZ-4A boring advanced at diff. location than PZ-4**

Diam. of casing: 4" | Screen Interval: 78-68 ft | Sandpack: 80-66 ft | Grout: 64-2 ft
BOH: 80 ft | Riser Interval: 68-0 ft | Bentonite: 66-64 ft | Cover: Conc. Pad, Stick up

Environmental Chemical Corporation

LOG OF SOIL BORING

Coordinates:
Surface Elevation:
Casing Below Surface:
Reference Elevation:
Reference Description: Top PVC Riser

Job. No. 5700.007 | Client NAVFAC | Location: EW-05B - NASB Eastern Plume

Drilling Method: Drive and Wash - 4" Casing | Boring No. EW-05B PZ-4A

Sampling Method: 2 in. dia. 2 ft Split Spoon, 140 lb drop weight | Sheet 2 of 4

Water Lev.					Drilling Start	Drilling Finish
Time					10-Aug-07	14-Aug-07
Date						
Reference						

Surface Conditions: Grass

Digital Picture #	Sample Type	In. Drvn / In. Recvrd	Dpth. Csg.	Samp. # / Samp. depth	PID (ppm)	Blows per 6 in.	Depth (feet)	USCS Log	Description
	SS	24/8	19		0	2	20		**13-Aug-07**
						4			Brn f-SAND tr silt - wet
						5	21		
						5			
	SS	24/12	19		0	4	22		
						9			Top 2" brn f-SAND
						10	23		Bott 10" brn SILT, tr f-sand - wet
						11			
	SS	24/20	24		0	5	24		
						4			Top 4" brn SILT, tr gry f-sand, tr gry silt - wet
						5	25		Bott 16" gry SILT
						6			
	SS	24/16	24		0	4	26		
						2			Top 11" gry SILT, tr gry f-sand
						1	27		2" layer gry f-sand tr gry silt - wet
						1			Bott 3" gry SILT, tr f-sand
	SS	24/20	24		0	1	28		
						2			Top 7" gry SILT with sand lenses
						1	29		Bott 6" gry silty CLAY, soft
						2			
	SS	24/16	29		0	WOH	30		
						WOH			Top 5" gry silty CLAY
						WOH	31		Bott 11" gry CLAY, soft - wet
						WOH			
	SS	24/14	29		0	WOH	32		
						WOH			Gry CLAY, soft - wet
						WOH	33		
						WOH			
	SS	24/11	34		0	1	34		
						WOH			Top 4" gry CLAY, soft - wet
						WOH	35		Bott 7" gry silty CLAY
						WOR			
	SS	24/13	34		0	WOR	36		
						WOR			Top 6" gry CLAY, soft
						WOH	37		Bott 7" gry SILT, tr gry clay, tr gry f-sand - wet
						WOH			
	SS	24/22	34		0	WOR	38		
						WOR			Gry silty CLAY, soft - wet
						WOH	39		
						WOH			

Logged by: J. Donovan | Date: 13-Aug-07
Drilling Contractor: East Coast Explorations | Driller: C. Palmer

WELL SPECIFICATIONS: **PZ-4A boring advanced at diff. location than PZ-4**

Diam. of casing: 4" | Screen Interval: 78-68 ft | Sandpack: 80-66 ft | Grout: 64-2 ft
BOH: 80 ft | Riser Interval: 68-0 ft | Bentonite: 66-64 ft | Cover: Conc. Pad, Stick up

Environmental Chemical Corporation

LOG OF SOIL BORING

Coordinates:
Surface Elevation:
Casing Below Surface:
Reference Elevation:
Reference Description: Top PVC Riser

Job. No. 5700.007	Client NAVFAC	Location: EW-05B - NASB Eastern Plume
Drilling Method: Drive and Wash - 4" Casing		Boring No. EW-05B PZ-4A
Sampling Method: 2 in. dia. 2 ft Split Spoon, 140 lb drop weight		Sheet 3 of 4
Water Lev. / Time / Date / Reference		Drilling: Start 10-Aug-07, Finish 14-Aug-07

Surface Conditions: Grass

Digital Picture #	Sample Type	In. Drvn / In. Recvrd	Dpth. Csg.	Samp. # / Samp. depth	PID (ppm)	Blows per 6 in.	Depth (feet)	USCS Log	
	SS	24/24	39		0	WOR	40		
						WOR			Gry silty CLAY, soft - wet
						WOR	41		2" layer gry f-sand at 41' 3"
						WOR			Bott 9" fry CLAY
	SS	24/24	39		0	WOH	42		
						WOH			Gry silty CLAY, 3" layer gry silt at 43' 2"
						2	43		Bott 5" gry silty clay - wet
						2			
	SS	24/21	44		0	1	44		
						1			Top 4" gry silty CLAY, soft
						1	45		10" layer gry f-SAND -wet
						2			Bott 7" gry silty CLAY, soft
	SS	24/19	44		0	4	46		
						1			Gry silty CLAY, soft - wet
						2	47		Bott 7" gryf-SAND, wet
						4			
	SS	24/22	44		0	2	48		
						1			Top 5" gry f-SAND - wet
						3	49		12" layer gry silty CLAY
						5			Bott 5" gry f-SAND - wet
	SS	24/19	49		0	1	50		
						2			Top 7" gry f-SAND - wet
						1	51		8" layer gry silty CLAY
						2			2" layer gry f-SAND, bott 2" gry silty CLAY
	SS	24/20	49		0	1	52		
						1			Top 6" gry f-SAND, bits of mica in sample - wet
						2	53		Bott 14" gry silty CLAY, tr gry f-sand, soft - wet
						5			
	SS	24/21	54		0	6	54		
						11			Gry f-SAND
						12	55		Bott 9" gry f-SAND, tr silt - wet
						14			
	SS	24/23	54		0	4	56		
						5			Top 15" gry f-SAND - wet
						4	57		4" layer gry silty CLAY
						12			Bott 2" gry silty CLAY, tr gry f-sand
	SS	24/24	54		0	1	58		
						3			Top 12" gry f-SAND - wet
						2	59		8" layer gry silty CLAY, soft
						5			Bott 4" gry SILT, tr gry clay - wet

Logged by: J. Donovan
Date: 13-Aug-07
Drilling Contractor: East Coast Explorations
Driller: C. Palmer

WELL SPECIFICATIONS: **PZ-4A boring advanced at diff. location than PZ-4**

Diam. of casing: 4"
Screen Interval: 78-68 ft
Sandpack: 80-66 ft
Grout: 64-2 ft
BOH: 80 ft
Riser Interval: 68-0 ft
Bentonite: 66-64 ft
Cover: Conc. Pad, Stick up

Environmental Chemical Corporation

LOG OF SOIL BORING

Coordinates:
Surface Elevation:
Casing Below Surface:
Reference Elevation:
Reference Description: Top PVC Riser

Job, No. 5700.007	Client NAVFAC	Location: EW-05B - NASB Eastern Plume
Drilling Method: Drive and Wash - 4" Casing		Boring No. EW-05B PZ-4A
Sampling Method: 2 in. dia. 2 ft Split Spoon, 140 lb drop weight		Sheet 4 of 4

Water Lev.					Drilling Start	Drilling Finish
Time					10-Aug-07	14-Aug-07
Date						
Reference						

Surface Conditions: Grass

Digital Picture #	Sample Type	In. Drvn / In. Recvrd	Dpth. Csg.	Samp. # / Samp. depth	PID (ppm)	Blows per 6 in.	Depth (feet)	USCS Log	
	SS	24/21	59		0	1	60		
						1			Top 6" gry f-SAND - wet
						1	61		Bott 15" gry CLAY, silt lenses, med stiff
						1			
	SS	24/24	59		0	WOR	62		
						WOR			Top 14" gry silty CLAY
						1	63		2" layer gry f-SAND, tr gry silt - wet
						1			Bott 6" gry silty CLAY, tr gry f-sand
	SS	24/24	64		0	3	64		
						3			Top 2" gry silty CLAY, 3" layer gry f-sand - wet
						7	65		2" layer gry silty CLAY, 2" layer gry f-SAND - wet
						14			
	SS	24/24	64		0	4	66		
						5			Red/brn f-SAND. Silt lenses throughout sample
						8	67		
						20			
	SS	24/16	64		0	3	68		
						14			Brn f-SAND, tr silt, tr clay, motteled - wet
						14	69		
						13			
	SS	24/21	69		0	6	70		
						5			Top 4" brn f-SAND, tr silt - wet
						8	71		11" layer brn silt, tr f-sand
						14			Bott 6" gry f-SAND, tr silt - wet
	SS	24/24	69		0	11	72		
						12			Top 7" brn/gry f-SAND
						8	73		Bott 17" gry f-SAND - wet
						8			
	SS	24/17	74		0	14	74		
						10			Gry f-SAND - wet
						14	75		
						19			
	SS	24/21	74		0	4	76		**14-Aug-07**
						8			Gry f-SAND - wet
						11	77		Bott 8" f-med sand - wet
						16			
	SS	24/24	74		0	8	78		
						10			Gry f-SAND - wet
						13	79		
						16			End of boring at 80 ft

Logged by: J. Donovan
Date: 14-Aug-07
Drilling Contractor: East Coast Explorations
Driller: C. Palmer

WELL SPECIFICATIONS: **PZ-4A boring advanced at diff. location than PZ-4**

Diam. of casing: 4"
Screen Interval: 78-68 ft
Sandpack: 80-66 ft
Grout: 64-2 ft
BOH: 80 ft
Riser Interval: 68-0 ft
Bentonite: 66-64 ft
Cover: Conc. Pad, Stick up

APPENDIX C

EW-05B and Piezometer Construction Diagrams

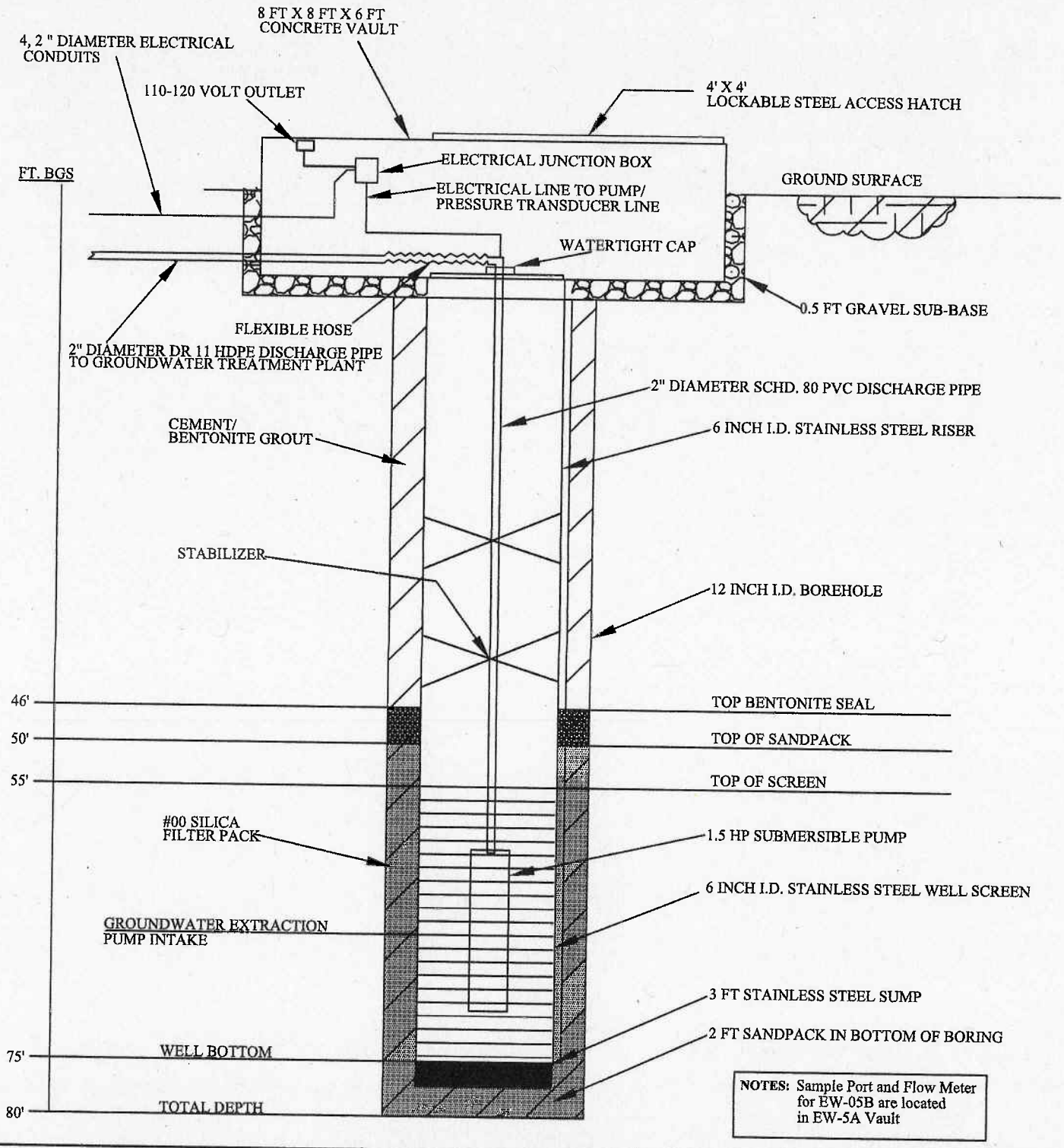

ECC 1240 BAYSHORE HIGHWAY BURLINGAME, CA 94010	DRAWN BY: JD	**EW-05B CONSTRUCTION DIAGRAM**
	APPROVED BY: GC	EXTRACTION WELL INSTALLATION EASTERN PLUME NASB, BRUNSWICK, ME
	DATE: 10/19/09	PROJECT CODE: 3700.007 / CONTRACT CODE: TO-07
	SIZE: A	SCALE: NTS / FILENAME: EW.DWG / SHEET: 1 OF 1 / REV: -

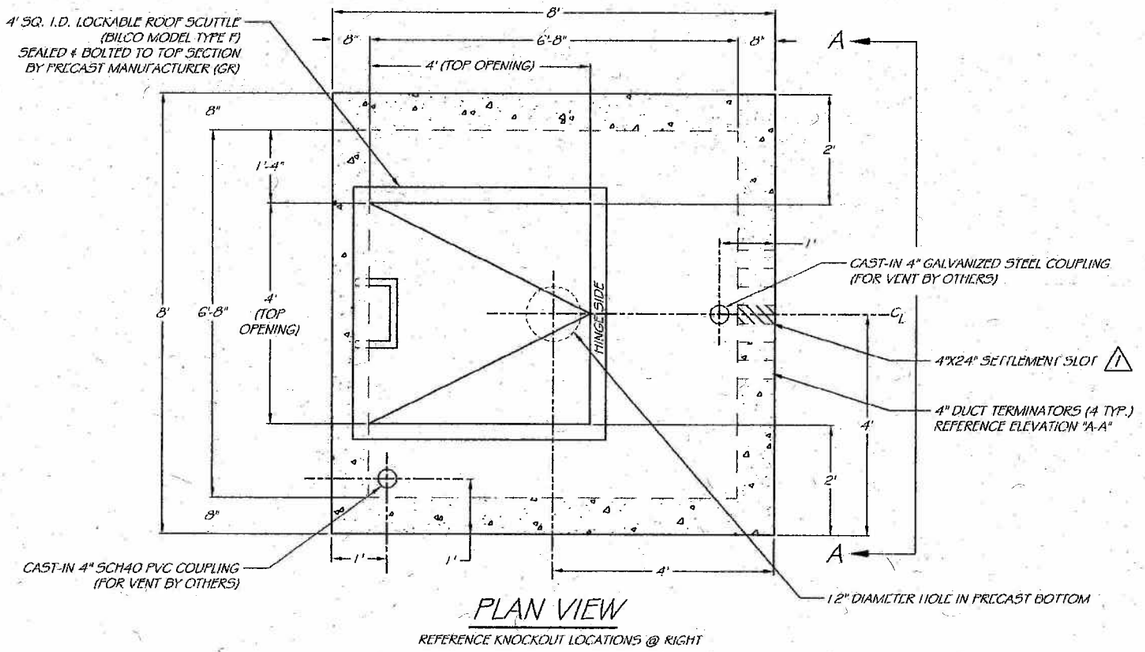

PLAN VIEW

REFERENCE KNOCKOUT LOCATIONS @ RIGHT

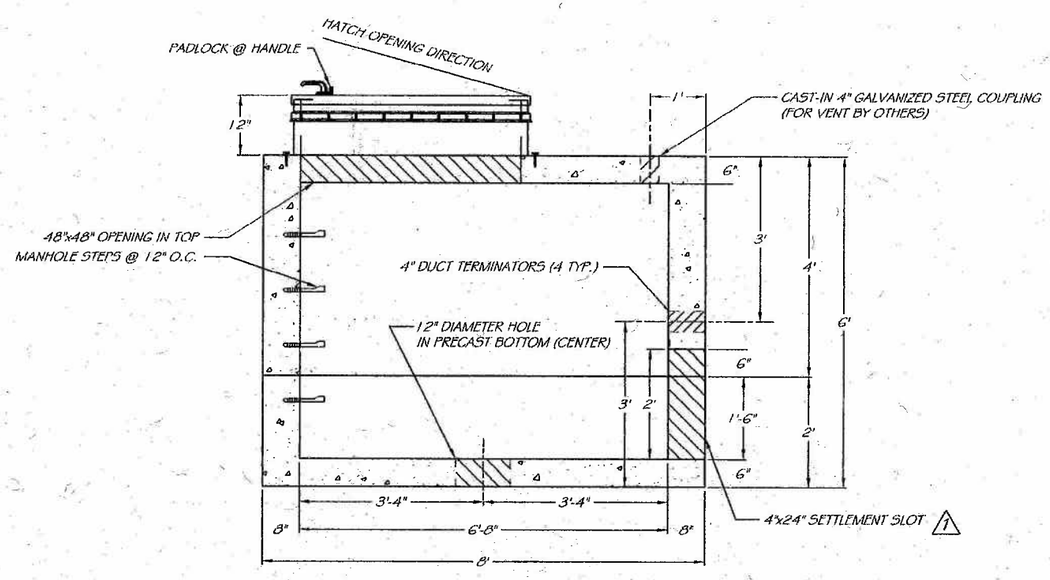

SECTION VIEW

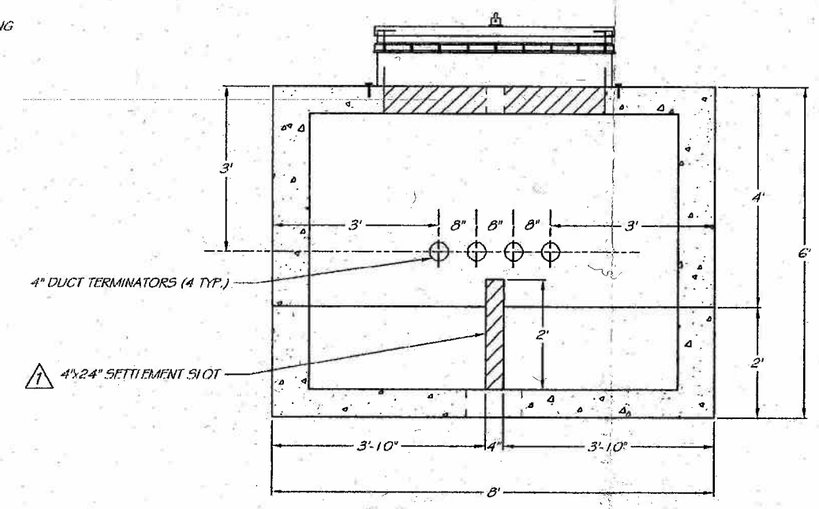

ELEVATION "A-A" (KNOCKOUT/SLOT SIDE)

NOTES:
1) CONCRETE: 5,000 PSI @ 28 DAYS
2) CEMENT: TYPE III PER ASTM C150-81
3) REBAR REINFORCED TOP & WALLS
4) JOINTS TO BE SEALED WATERTIGHT W/ CONSEAL

REVISIONS: 1 5/14/09

DATE: 5/8/09

SCALE: 3/8"=1'-0"

SHEET # 1 of 2

DWG BY: LPP

6x6 PRECAST CONCRETE VAULT (EW-05B)

CONTRACTOR: ENVIRONMENTAL CHEMICAL CORP.

ENGINEER:

LOCATION: BRUNSWICK, ME

JOB: (#6562) NAS BRUNSWICK

George R. Roberts Co.
Precast Concrete Products
P.O. Box 127, Route 111
Alfred, Maine 04002
Tel. (207)-324-6571
Fax. (207)-324-8533

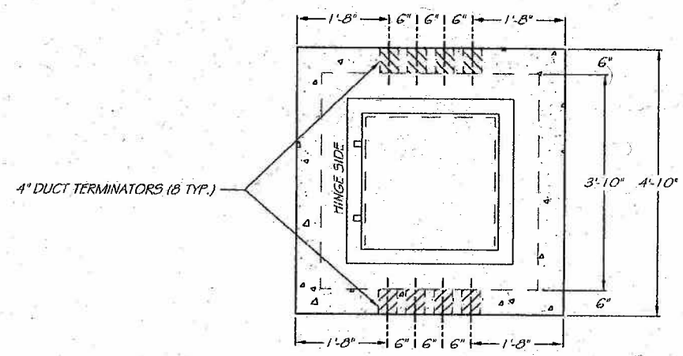

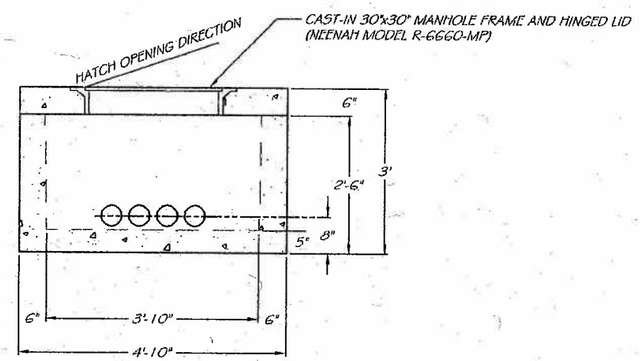

NO CHANGES THIS SHEET

NOTES:
1) CONCRETE: 5,000 PSI @ 28 DAYS
2) CEMENT: TYPE III PER ASTM C150-81
3) REBAR REINFORCED TOP & WALLS
4) JOINTS TO BE SEALED WATERTIGHT W/ CONSEAL

REVISIONS: 1 5/14/09

DATE: 5/8/09
SCALE: 3/8"= 1'-0"
SHEET # 2 of 2
DWG BY: LPP

4x4 ELECTRICAL HAND HOLD

CONTRACTOR: ENVIRONMENTAL CHEMICAL CORP.
ENGINEER:
JOB: (#6562) NAS BRUNSWICK
LOCATION: BRUNSWICK, ME

George R. Roberts Co.
Precast Concrete Products
P.O. Box 127, Route 111
Alfred, Maine 04002
Tel. (207)-324-6571
Fax. (207)-324-8533

C\: NAVY \TO-07 -EW-05B PZs

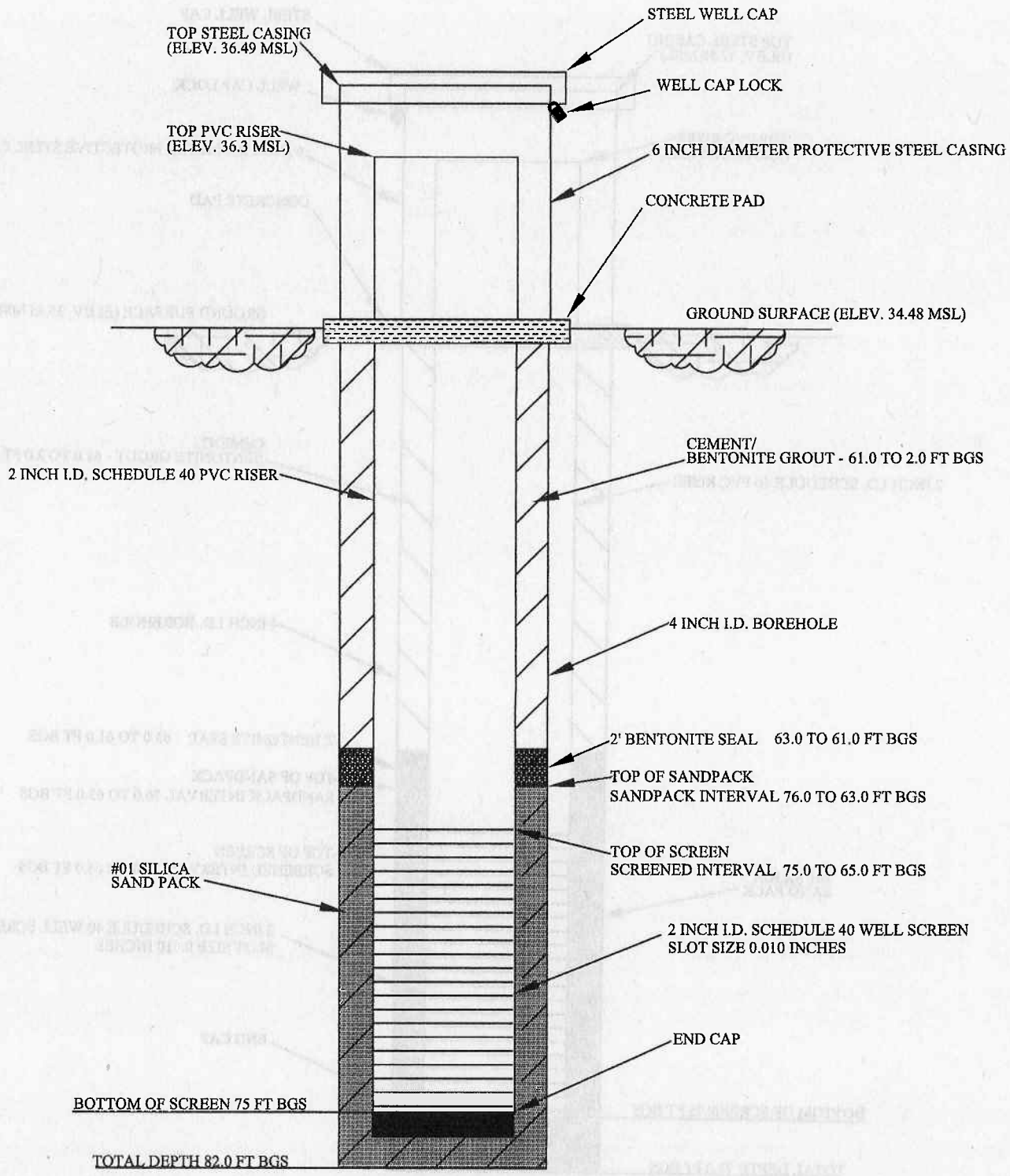

ECC 33 BOSTON POST ROAD WEST-SUITE 340 MARLBOROUGH, MA 01752	DRAWN BY: JD APPROVED BY: JG DATE: 6/26/09 SIZE: A	**EW-05B-PZ-1CONSTRUCTION DIAGRAM** PIEZOMETER INSTALLATION EASTERN PLUME NASB, BRUNSWICK, ME

PROJECT CODE: 3700.000	CONTRACT CODE: TO-07		
SCALE: NTS	FILENAME: PZ.DWG	SHEET: 1 OF 1	REV: -

C\: NAVY \TO-07 -EW-05B PZs

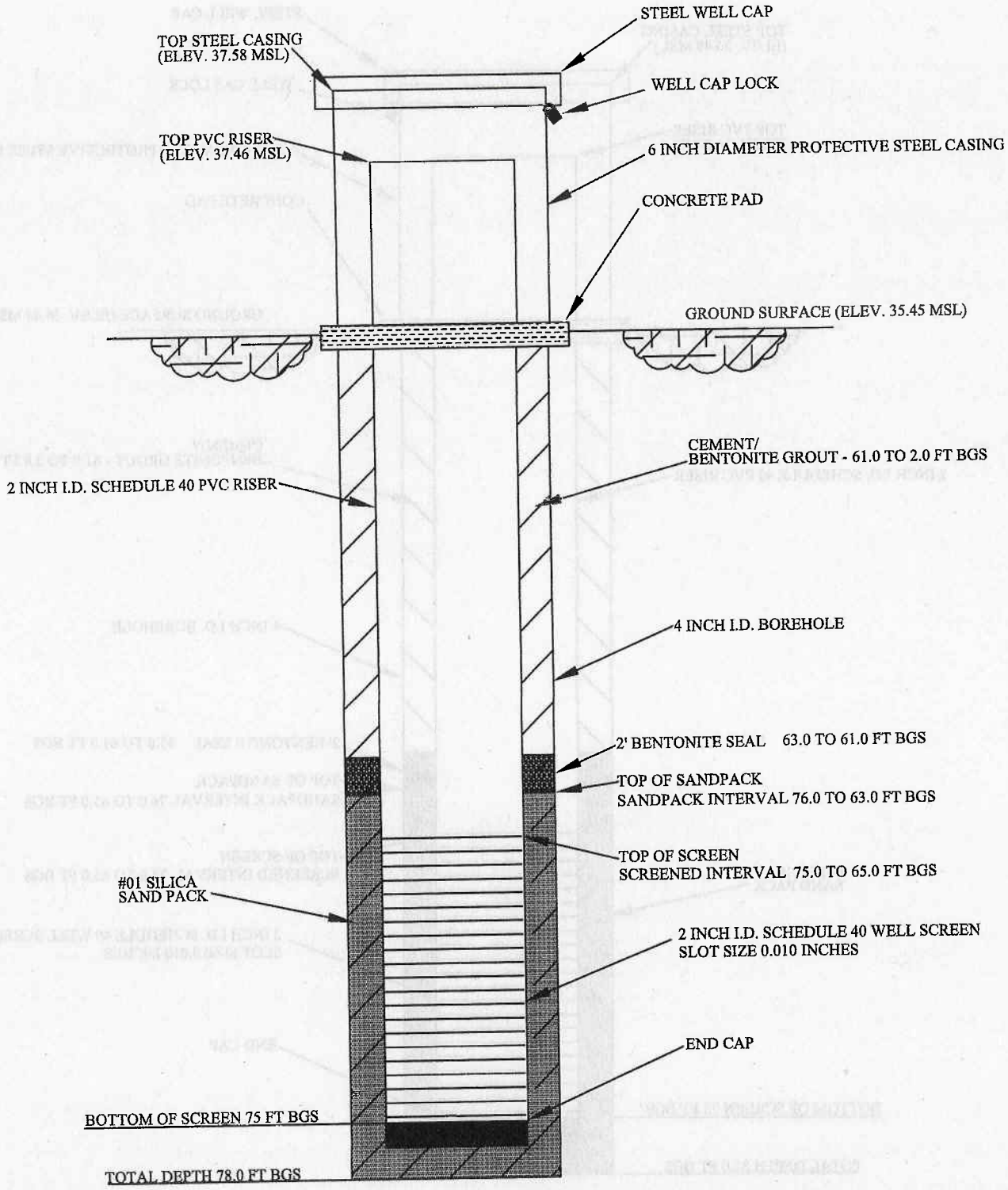

ECC 33 BOSTON POST ROAD WEST-SUITE 340 MARLBOROUGH, MA 01752	DRAWN BY: JD APPROVED BY: JG DATE: 6/26/09 SIZE: A	EW-05B-PZ-2 CONSTRUCTION DIAGRAM PIEZOMETER INSTALLATION EASTERN PLUME NASB, BRUNSWICK, ME
		PROJECT CODE: 3700.000 / CONTRACT CODE: TO-07
		SCALE: NTS / FILENAME: PZ.DWG / SHEET: 1 OF 1 / REV: -

C\: NAVY \TO-07 -EW-05B PZs

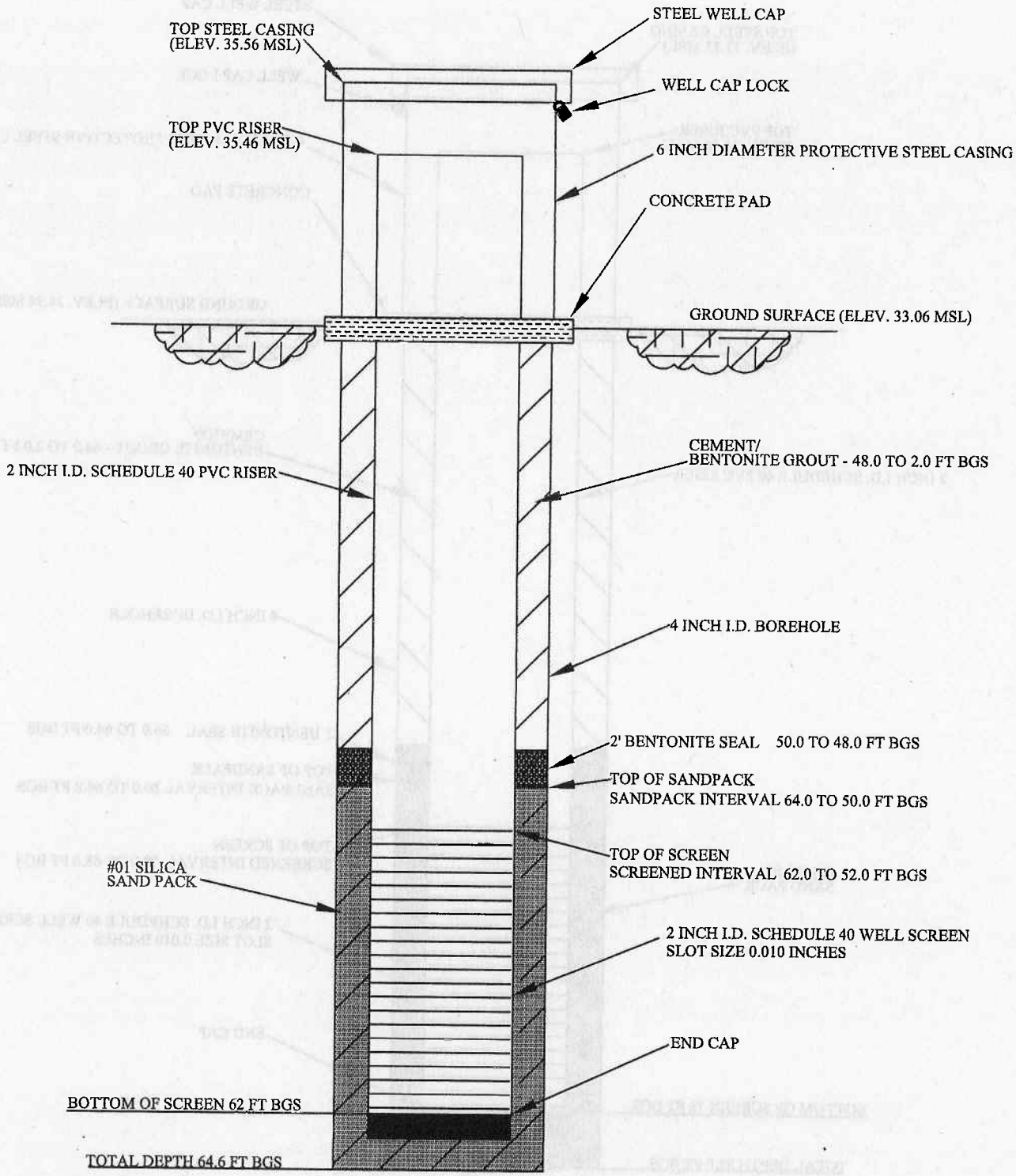

ECC 33 BOSTON POST ROAD WEST-SUITE 340 MARLBOROUGH, MA 01752	DRAWN BY: JD APPROVED BY: JG DATE: 6/26/09 SIZE: A	**EW-05B-PZ-3 CONSTRUCTION DIAGRAM** PIEZOMETER INSTALLATION EASTERN PLUME NASB, BRUNSWICK, ME

PROJECT CODE: 3700.000	CONTRACT CODE: TO-07		
SCALE: NTS	FILENAME: PZ.DWG	SHEET: 1 OF 1	REV: -

C\: NAVY \TO-07 -EW-05B PZs

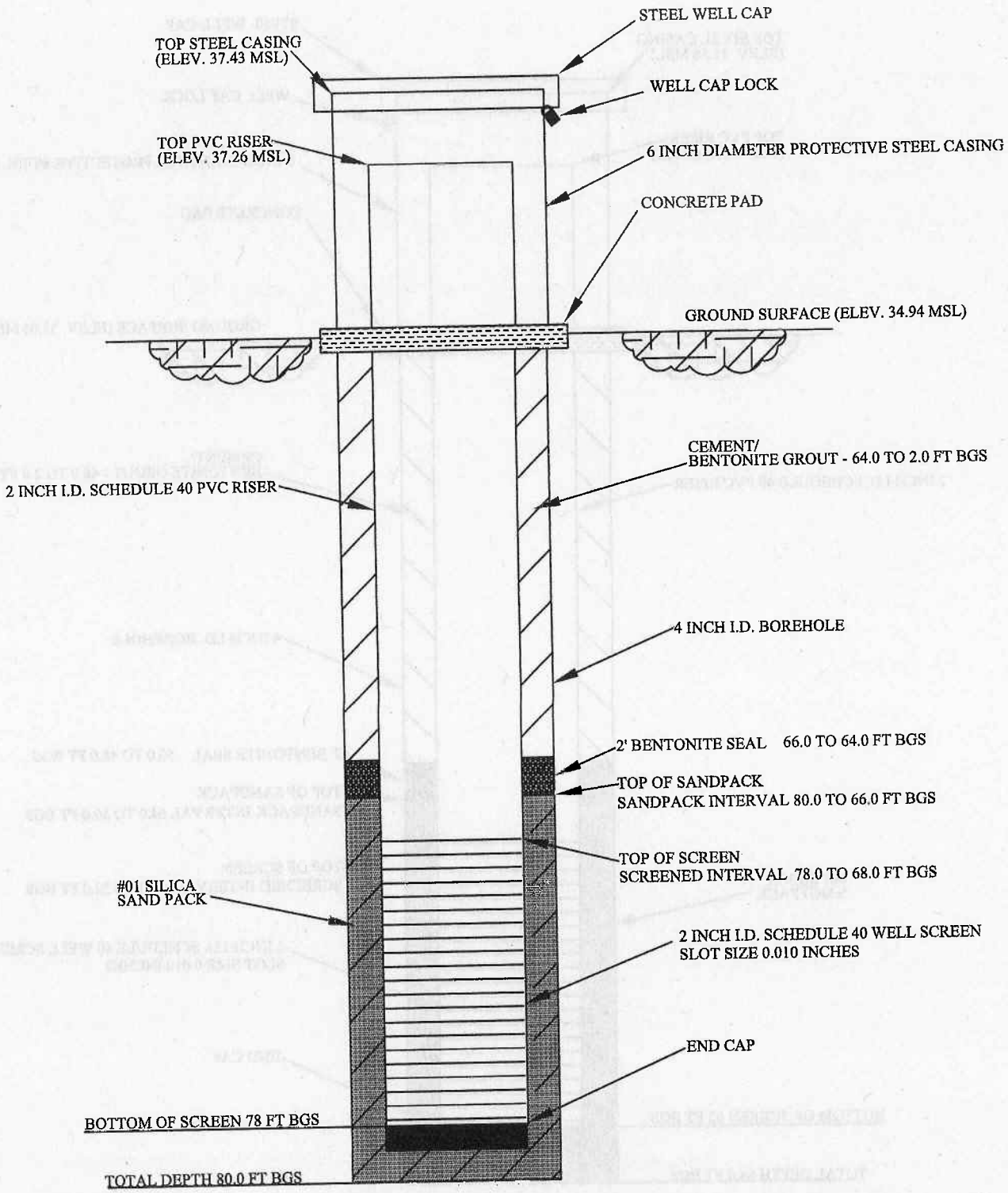

ECC 33 BOSTON POST ROAD WEST-SUITE 340 MARLBOROUGH, MA 01752	DRAWN BY: JD APPROVED BY: JG DATE: 6/26/09 SIZE: A	**EW-05B-PZ-4A CONSTRUCTION DIAGRAM** PIEZOMETER INSTALLATION EASTERN PLUME NASB, BRUNSWICK, ME
		PROJECT CODE: 3700.000 / CONTRACT CODE: TO-07
		SCALE: NTS / FILENAME: PZ.DWG / SHEET: 1 OF 1 / REV: -

APPENDIX D

Well Development Logs

FIELD RECORD OF WELL DEVELOPMENT

Project Name: ~~NASB-Mere Brook~~ EW-5B	Project No:	Date: 7-24-07
ECC Personnel: J. Donovan	Development Method: PUMP + SURGE SMALL RIG	
Weather/Temperature/Barometric Pressure: CLOUDY 70°		Time: 0700

Well No.: EW-5B	Well Condition: GOOD
Well Diameter: 6" SS	Measurement Reference: TOP METAL CASING

Well Volume Calculations

A. Depth To Water (ft): 1.83	D. Well Volume/ft:
B. Total Well Depth (ft): 29.7	E. Total Well Volume (gal)[C*D]: 117 GAL
C. Water Column Height (ft): 27.97	F. Five Well Volumes (gal): 585 GAL

Parameter	Beginning	1 Volume	2 Volumes	3 Volumes	4 Volumes	5 Volumes
Time (min) 0800	0800	0823	0846	0909	0930	0953
Depth to Water (ft)	18.71	19.2	18.2	18.79	18.81	18.79
Purge Rate (gpm)	5	5	5	5	5	5
Volume Purged (gal)	0 *	117	234	351	468	585
pH	8.2	7.9	7.67	7.63	7.61	7.54
Temperature (°F)	12.5	12.05	11.73	11.94	11.91	11.93
Conductivity (µmhos/cm)	266	181	176	171	170	178
Dissolved Oxygen	7.3	4.98	2.77	2.82	2.23	2.31
Turbidity (NTU)	975	56	657	201	52.8	685
eH (mV) ORP	-9.9	11.3	4.6	-2.6	1.1	1.8

Parameter	6 Volumes	7 Volumes	8 Volumes	9 Volumes	10 Volumes	11 End
Time (min)	1016	1039	1102	1125	1136	1147
Depth to Water (ft)	17.1	17.2	17.45	23.8	25.1	25.3
Purge Rate (gpm)	5	5	5	10	10	10
Volume Purged (gal)	702	819	936	1053	1170	1287
PH	7.51	7.51	7.52	7.43	7.5	7.51
Temperature (°F)	11.94	11.98	11.95	11.97	11.4	11.45
Conductivity (µmhos/cm)	172	170	169	170	169	168
Dissolved Oxygen	2.29	2.28	2.31	2.36	2.73	2.81
Turbidity (NTU)	503	144	54.4	208	144	79
eH (mV) ORP	41.6	42.9	44.1	48.7	104.6	112.1

COMMENTS AND OBSERVATIONS: * PURGED 175 GAL ON 7-23-07 START AT
STARTED PUMPING FOR 1 WELL VOL. THEN SURGE + PUMP. AT 6 WELL VOLS. MOVED
PUMP AND SURGE BLOCK TO BOTT. ~ FT OF SCREEN
* AT 9 WELL VOLS - INCREASED PUMP RATE TO 10 GPM

FIELD RECORD OF WELL DEVELOPMENT

Project Name: ~~NASB-Mere Brook~~ EW-5B	Project No:	Date: 7-24-07
ECC Personnel: J. Donovan	Development Method: pump + surge small rig	
Weather/Temperature/Barometric Pressure: clear 70°		Time: 0800

Well No.: EW-5B	Well Condition: good
Well Diameter: 6" SS	Measurement Reference: top metal casing

Well Volume Calculations

A. Depth To Water (ft): 1.63	D. Well Volume/ft:
B. Total Well Depth (ft): 29.7	E. Total Well Volume (gal)[C*D]: 117 gal
C. Water Column Height (ft): 27.99	F. Five Well Volumes (gal): 585 gal

Parameter	Beginning	1 Volume	2 Volumes	3 Volumes	4 Volumes	5 Volumes
Time (min) 0800	0800	0823	0846	0909	0930	0953
Depth to Water (ft)	14.71	19.7	18.2	18.79	18.81	18.79
Purge Rate (gpm)	5	5	5	5	5	5
Volume Purged (gal)	0*	117	234	351	468	585
pH	8.2	7.9	7.67	7.63	7.61	7.54
Temperature (°F)	12.5	12.05	11.73	11.94	11.91	11.93
Conductivity (µmhos/cm)	266	181	176	171	170	178
Dissolved Oxygen	7.3	4.98	2.77	2.87	2.23	2.31
Turbidity (NTU)	975	56	657	201	52.8	685
eH (mV) ORP	-9.9	11.3	4.6	-2.6	1.1	1.8

Parameter	6 Volumes	7 Volumes	8 Volumes	9 Volumes	10 Volumes	End
Time (min)	1016	1039	1102	1125	1136	1147
Depth to Water (ft)	17.1	17.2	17.45	23.8	25.1	25.3
Purge Rate (gpm)	5	5	5	10	10	10
Volume Purged (gal)	702	819	936	1053	1170	1287
PH	7.51	7.51	7.52	7.43	7.5	7.51
Temperature (°F)	11.94	11.98	11.95	11.97	11.4	11.45
Conductivity (µmhos/cm)	172	170	169	170	169	168
Dissolved Oxygen	2.29	2.28	2.37	2.36	2.73	2.81
Turbidity (NTU)	507	144	54.4	208	144	79
eH (mV) ORP	41.6	42.9	44.1	48.7	104.6	112.1

COMMENTS AND OBSERVATIONS: *PURGED 175 GAL. ON 7-23-07. START AT (TRIPLE) PUMPING FOR 1 WELL VOL. THEN SURGE + PUMP AT 6 WELL VOLS. MOVED PUMP AND SURGE BLOCK TO BOTT. OF FT. OF SCREEN.
*AT 9 WELL VOLS. INCREASED PUMP RATE TO 10 GPM

FIELD RECORD OF WELL DEVELOPMENT

EW-5B-P2-1

Project Name: ~~NASB-Mere Brook~~ EW	Project No: 5100.007	Date: 8-14-07
ECC Personnel: J. DONOVAN	Development Method: SURGE BLOCK / PUMP	
Weather/Temperature/Barometric Pressure: SUNNY 70'S 759.7 mm/Hg		Time: 1521

Well No.: EW-5B-P2-1	Well Condition: GOOD - STICK UP
Well Diameter: 2"	Measurement Reference: TOP PVC

Well Volume Calculations

A. Depth To Water (ft): 1.41	D. Well Volume/ft:
B. Total Well Depth (ft): 77.5 TOP PVC	E. Total Well Volume (gal)[C*D]: 12.1
C. Water Column Height (ft): 76.09	F. Five Well Volumes (gal): 60.5

Parameter	Beginning	1 Volume	2 Volumes	3 Volumes	4 Volumes	5 Volumes
Time (min)	1521	1524	1527	1530	1533	1536
Depth to Water (ft)	1.41	3.35	4.3	4.7	4.6	4.6
Purge Rate (gpm)	4	4	3.5	3	3	3
Volume Purged (gal)	0	12.1	24.2	36.3	48.4	60.5
pH	7.86	6.72	6.5	6.6	6.3	6.56
Temperature (°F)	12.32	13.1	11.97	11.8	11.9	11.8
Conductivity (µmhos/cm)	279	151	142	143	147	146
Dissolved Oxygen	14.78	4.77	4.62	4.51	4.37	3.78
Turbidity (NTU)	ER-2	ER-2	ER-2	468	372	285
~~eH (mV)~~ ORP	51.6	166.6	163.6	116.0	89.5	90.1

Parameter	6 Volumes	7 Volumes	8 Volumes	9 Volumes	10 Volumes	End
Time (min)	1539	1542	1545	1548	1551	~~1~~
Depth to Water (ft)	4.6	4.7	4.6	4.7	4.7	
Purge Rate (gpm)	3	3	3	3	3	
Volume Purged (gal)	72.6	84.7	96.8	108.8	120	
PH	6.61	6.6	6.6	6.5	6.4	
Temperature (°F)	11.9	11.9	11.8	11.75	11.69	
Conductivity (µmhos/cm)	146	145	146	147	147	
Dissolved Oxygen	3.68	3.57	3.58	3.41	3.37	
Turbidity (NTU)	87.1	18.1	9.2	8.1	7.2	
~~eH (mV)~~ ORP	89.6	87.2	86.1	85.1	79.8	

COMMENTS AND OBSERVATIONS: ER-2 = TO TURBID FOR INST. TO READ

FIELD RECORD OF WELL DEVELOPMENT

Project Name: ~~NASB-Mare Brook~~ EW-58-P2-2	Project No:	Date: 8-15-07
ECC Personnel: J. Donovan	Development Method: SURGE BLOCK / PUMP	
Weather/Temperature/Barometric Pressure: SUNNY 70°		Time: 0835

Well No.: EW-58-P2-2	Well Condition: GOOD
Well Diameter: 2" - STICK UP	Measurement Reference: TOP PVC

Well Volume Calculations

A. Depth To Water (ft): 2.54 TOP PVC	D. Well Volume/ft:
B. Total Well Depth (ft): 76.6	E. Total Well Volume (gal)(C*D): 11.8
C. Water Column Height (ft): 74.06	F. Five Well Volumes (gal): 59.0

Parameter	Beginning	1 Volume	2 Volumes	3 Volumes	4 Volumes	5 Volumes
Time (min)	0835	0841	0847	0853	0901	0909
Depth to Water (ft)	2.54	4.1	4.45	4.6	4.27	4.3
Purge Rate (gpm)	~~2~~ 2	~~4.82~~	~~23.62~~ 2	2	1.5	1.5
Volume Purged (gal)	0	11.8	23.6	35.4	47.2	59.0
pH	8.05	7.97	8.06	7.17	7.26	7.48
Temperature (°F)	11.45	13.04	15.12	12.14	10.29	11.91
Conductivity (µmhos/cm)	173	168	173	134	132	128
Dissolved Oxygen	7.27	5.28	5.13	7.39	8.85	7.22
Turbidity (NTU)	ER-2	ER-2	494	190	18.2	0.12
~~eH (mV)~~ ORP	83.2	92.9	119.1	137.8	155.2	169.4

Parameter	6 Volumes	7 Volumes	8 Volumes	9 Volumes	10 Volumes	End
Time (min)	0917	0925				
Depth to Water (ft)	4.57	4.52				
Purge Rate (gpm)	1.5	1.5				
Volume Purged (gal)	70.8	82.6				
PH	7.35	7.34				
Temperature (°F)	11.89	11.91				
Conductivity (µmhos/cm)	128	128				
Dissolved Oxygen	7.74	7.69				
Turbidity (NTU)	0.08	0.04				
~~eH (mV)~~ ORP	168.5	170.1				

COMMENTS AND OBSERVATIONS: ER-2 = TO TURBID. FOR INST. TO READ

FINISH DEV AT 0925

FIELD RECORD OF WELL DEVELOPMENT

EW-5B-PZ-3

Project Name: ~~NASB-Mere Brook~~ Lv	Project No: 5760.007	Date: 8-15-07
ECC Personnel: J. Donovan	Development Method: surge block / pump	
Weather/Temperature/Barometric Pressure: Clear 70° 756.8 mm/Hg		Time: 1125

Well No.: EW-5B-PZ-3	Well Condition: Good
Well Diameter: 2"	Measurement Reference: TOP PVC

Well Volume Calculations

A. Depth To Water (ft): 4.07	D. Well Volume/ft:
B. Total Well Depth (ft): 64.5 TOP PVC	E. Total Well Volume (gal)[C*D]: 9.6
C. Water Column Height (ft): 60.43	F. Five Well Volumes (gal): 48

Parameter	Beginning	1 Volume	2 Volumes	3 Volumes	4 Volumes	5 Volumes
Time (min)	1125	1205	1243	1321	1325	
Depth to Water (ft)	4.07	13.2	13.55	13.28	13.85	
Purge Rate (gpm)	0.25	0.25	0.25	0.25	0.25	
Volume Purged (gal)	0	9.6	19.2	28.8	38.4	
pH	10.96	11.6	11.3	10.89	10.76	
Temperature (°F)	12.59	15.06	16.09	16.43	16.88	
Conductivity (µmhos/cm)	2538	1629	663	417	321	
Dissolved Oxygen	7.19	6.51	4.97	3.93	3.78	
Turbidity (NTU)	146	ER-2	ER-2	ER-2	ER-2	
eH (mV) ORP	-48.7	-77.8	-86.8	-93.1	-91.7	

Parameter	6 Volumes	7 Volumes	8 Volumes	9 Volumes	10 Volumes	End
Time (min)						
Depth to Water (ft)						
Purge Rate (gpm)						
Volume Purged (gal)						
PH						
Temperature (°F)						
Conductivity (µmhos/cm)						
Dissolved Oxygen						
Turbidity (NTU)						
eH (mV)						

COMMENTS AND OBSERVATIONS: ER-2 = >1000 TURBID FOR INST. >1000 ABOVE 2 HR TIME LIMIT REACHED AT 1325

FIELD RECORD OF WELL DEVELOPMENT

EW-5B-P2-4A

Project Name: ~~NASB-Mere Brook~~ Lw	Project No:	Date: 8/15-07
	Development Method: SURGE BLOCK / PUMP	
ECC Personnel: J. Donovan		Time: 1000
Weather/Temperature/Barometric Pressure: Sunny 70° 756.4 mm/Hg		

Well No.: EW-5B-P2-4A	Well Condition: Good
Well Diameter: 2" STICK UP	Measurement Reference: TOP PVC

Well Volume Calculations

A. Depth To Water (ft): 1.86	D. Well Volume/ft:
B. Total Well Depth (ft): 81.65 TOP PVC	E. Total Well Volume (gal)[C*D]: 12.7
C. Water Column Height (ft): 79.79	F. Five Well Volumes (gal): 63.5

Parameter	Beginning	1 Volume	2 Volumes	3 Volumes	4 Volumes	5 Volumes
Time (min)	1000	1006	1012	1018	1028	1034
Depth to Water (ft)	1.86	2.59	2.25	2.79	2.91	2.87
Purge Rate (gpm)	2.0	2.0	2.0	1.5	1.5	1.5
Volume Purged (gal)	0	12.7	25.4	38.1	50.8	63.5
pH	7.34	7.17	7.22	7.31	7.39	7.42
Temperature (°F)	14.7	13.86	13.6	13.26	11.76	11.81
Conductivity (µmhos/cm)	168	170	168	179	191	193
Dissolved Oxygen	5.34	4.08	3.55	2.68	5.48	3.92
Turbidity (NTU)	ER-2	ER-2	ER-2	ER-2	412	570
~~Eh (mV)~~ ORP	115.6	121.7	102.5	89.1	58.7	38.8

Parameter	6 Volumes	7 Volumes	8 Volumes	9 Volumes	10 Volumes	End
Time (min)	1042	1050	1058	1106		
Depth to Water (ft)	2.9	2.91	2.9	2.92		
Purge Rate (gpm)	1.5	1.5	1.5	1.5		
Volume Purged (gal)	76.2	88.9	101.6	114.3		
pH	7.46	7.46	7.46	7.5		
Temperature (°F)	11.82	11.79	11.8	11.81		
Conductivity (µmhos/cm)	194	194	196	194		
Dissolved Oxygen	3.86	3.84	3.79	3.87		
Turbidity (NTU)	90.1	9.8	8.6	7.1		
~~Eh (mV)~~ ORP	22.2	21.8	22.0	21.6		

COMMENTS AND OBSERVATIONS: ER-2 = TO TURBID FOR INST. TO READ

APPENDIX E

IDW Analytical Data
And Waste Profile Forms

Northeast Laboratory Services
P.O. Box 788
Waterville, Maine 04903-0788

227 China Road
Winslow, Maine 04901

Administrative Offices
Phone: 207-873-7711
Fax: 207-873-7022

Customer Service
Phone: 800-244-8378
Fax: 207-873-7022

ANALYSIS REPORT

Attention: JACKSON KIKER
ECC
33 BOSTON POST ROAD WEST
SUITE 340
MARLBOROUGH MA 01752

Lab ID Number: AJ08865
Project Number: Extraction Well Installation
P.O. Number: EW-5B-NASB
Date Collected: 07/17/2007 05:30 PM
DateReceived: 07/19/2007 10:45 AM
Date Reported: 07/31/2007

Sample Matrix: G-WATER
Sample Description: IDW-EW-5B-NASB
Sample Type: Grab

Parameter	Result	Qualifier	Unit	Detection Limit	Method	Preparation Date/Time		Analysis Date/Time		Analyst
EPA 8260-ECC Groundwater										
1,1,2,2-Tetrachloroethane	<1.0		ug/L	1.0	EPA 8260B	07/27/2007	8:53	07/27/2007	20:14	AP
1,1,2-Trichloroethane	<1.0		ug/L	1.0	EPA 8260B	07/27/2007	8:53	07/27/2007	20:14	AP
1,1-Dichloroethane	<1.0		ug/L	1.0	EPA 8260B	07/27/2007	8:53	07/27/2007	20:14	AP
1,1-Dichloroethene	<1.0		ug/L	1.0	EPA 8260B	07/27/2007	8:53	07/27/2007	20:14	AP
1,2-Dichloroethane	<1.0		ug/L	1.0	EPA 8260B	07/27/2007	8:53	07/27/2007	20:14	AP
1,2-Dichloroethane (total)	<1.0		ug/L	1.0	EPA 8260B	07/27/2007	8:53	07/27/2007	20:14	AP
1,2-Dichloropropane	<1.0		ug/L	1.0	EPA 8260B	07/27/2007	8:53	07/27/2007	20:14	AP
Benzene	<1.0		ug/L	1.0	EPA 8260B	07/27/2007	8:53	07/27/2007	20:14	AP
Bromodichloromethane	<1.0		ug/L	1.0	EPA 8260B	07/27/2007	8:53	07/27/2007	20:14	AP
Bromoform	<1.0		ug/L	1.0	EPA 8260B	07/27/2007	8:53	07/27/2007	20:14	AP
Bromomethane	<1.0		ug/L	1.0	EPA 8260B	07/27/2007	8:53	07/27/2007	20:14	AP
Carbon Disulfide	<1.0		ug/L	1.0	EPA 8260B	07/27/2007	8:53	07/27/2007	20:14	AP
Carbon Tetrachloride	<1.0		ug/L	1.0	EPA 8260B	07/27/2007	8:53	07/27/2007	20:14	AP
Chlorobenzene	<1.0		ug/L	1.0	EPA 8260B	07/27/2007	8:53	07/27/2007	20:14	AP
Chloroethane	<1.0		ug/L	1.0	EPA 8260B	07/27/2007	8:53	07/27/2007	20:14	AP
Chloromethane	<1.0		ug/L	1.0	EPA 8260B	07/27/2007	8:53	07/27/2007	20:14	AP
cis-1,3-Dichloropropene	<1.0		ug/L	1.0	EPA 8260B	07/27/2007	8:53	07/27/2007	20:14	AP
Dibromochloromethane	<1.0		ug/L	1.0	EPA 8260B	07/27/2007	8:53	07/27/2007	20:14	AP
Ethylbenzene	<1.0		ug/L	1.0	EPA 8260B	07/27/2007	8:53	07/27/2007	20:14	AP
Hexachlorobutadiene	<1.0		ug/L	1.0	EPA 8260B	07/27/2007	8:53	07/27/2007	20:14	AP
Methylene Chloride	<1.0		ug/L	1.0	EPA 8260B	07/27/2007	8:53	07/27/2007	20:14	AP
Styrene	<1.0		ug/L	1.0	EPA 8260B	07/27/2007	8:53	07/27/2007	20:14	AP
Tetrachloroethene	<1.0		ug/L	1.0	EPA 8260B	07/27/2007	8:53	07/27/2007	20:14	AP
Toluene	<1.0		ug/L	1.0	EPA 8260B	07/27/2007	8:53	07/27/2007	20:14	AP
trans-1,3-Dichloropropene	<1.0		ug/L	1.0	EPA 8260B	07/27/2007	8:53	07/27/2007	20:14	AP
Trichloroethene	<1.0		ug/L	1.0	EPA 8260B	07/27/2007	8:53	07/27/2007	20:14	AP
Vinyl Chloride	<1.0		ug/L	1.0	EPA 8260B	07/27/2007	8:53	07/27/2007	20:14	AP
Xylenes (total)	<1.0		ug/L	1.0	EPA 8260B	07/27/2007	8:53	07/27/2007	20:14	AP
2-Butanone	<5.0		ug/L	5.0	EPA 8260B	07/27/2007	8:53	07/27/2007	20:14	AP
2-Hexanone	<5.0		ug/L	5.0	EPA 8260B	07/27/2007	8:53	07/27/2007	20:14	AP
4-Methyl-2-pentanone	<5.0		ug/L	5.0	EPA 8260B	07/27/2007	8:53	07/27/2007	20:14	AP
1,1,1-Trichloroethane	1.0		ug/L	1.0	EPA 8260B	07/27/2007	8:53	07/27/2007	20:14	AP

Analytical results and reports are generated by NEL at the request of and for the exclusive use of the person or entity (client) named on this report. Results, reports or copies of same will not be released by NEL to any third party without the prior express written consent from the client named in tl report. This report applies only to those samples taken at the time, place and location referenced by the client. This report makes no express or implied warranty or guarantee as to the sampling methodology used by the individual performing the sampling. The client is solely responsible for tl use and interpretation of these results and NEL makes no express or implied warranties as to such use or interpretation. NEL is not able to make a does not make a determination as to the environmental soundness, safety or health of a property from only the samples sent to their laboratory for analysis. Unless otherwise specified by the Client, NEL reserves the right to dispose of all samples after the testing of such samples is sufficiently completed or after a thirty-day period, whichever period is greater. NEL liability extends only to the cost of the testing.

227 China Road
Winslow, Maine 04901

ANALYSIS REPORT

Attention: JACKSON KIKER
ECC
33 BOSTON POST ROAD WEST
SUITE 340
MARLBOROUGH MA 01752

Lab ID Number: AJ08865
Project Number: Extraction Well Installation
P.O. Number: EW-5B-NASB
Date Collected: 07/17/2007 05:30 PM
DateReceived: 07/19/2007 10:45 AM
Date Reported: 07/31/2007

Sample Matrix: G-WATER
Sample Description: IDW-EW-5B-NASB
Sample Type: Grab

Parameter	Result	Qualifier	Unit	Detection Limit	Method	Preparation Date/Time		Analysis Date/Time		Analyst
1,2-Dichloroethane-d4 (Surrogate)	113		%	70	EPA 8260B	07/27/2007	8:53	07/27/2007	20:14	AP
Chloroform	14		ug/L	1.0	EPA 8260B	07/27/2007	8:53	07/27/2007	20:14	AP
Acetone	16		ug/L	5.0	EPA 8260B	07/27/2007	8:53	07/27/2007	20:14	AP
4-Bromofluorobenzene (Surrogate)	92		%	82	EPA 8260B	07/27/2007	8:53	07/27/2007	20:14	AP
Toluene-d8 (Surrogate)	95		%	82	EPA 8260B	07/27/2007	8:53	07/27/2007	20:14	AP
Total Cyanide-GW	<0.01		mg/L	0.01	EPA 9010	07/25/2007	10:00	07/25/2007	20:00	VAL
Silver Total	<0.01		mg/L	0.01	EPA 6010B	07/20/2007	14:39	07/23/2007	14:39	KSD
Aluminum Total	77		mg/L	4.0	EPA 6010B	07/23/2007	15:19	07/23/2007	15:19	KSD
* A 1:20 dilution was performed in order to bring the concentration of aluminium into the calibration range. Reporting limit has been increased to account for dilution factor.										
Arsenic Total	0.027		mg/L	0.01	EPA 6010B	07/20/2007	14:39	07/23/2007	14:39	KSD
Barium Total	0.28		mg/L	0.20	EPA 6010B	07/20/2007	14:39	07/23/2007	14:39	KSD
Beryllium Total	<0.005		mg/L	0.005	EPA 6010B	07/20/2007	14:39	07/23/2007	14:39	KSD
Calcium Total	18		mg/L	5.0	EPA 6010B	07/20/2007	14:39	07/23/2007	14:39	KSD
Cadmium Total	<0.005		mg/L	0.005	EPA 6010B	07/20/2007	14:39	07/23/2007	14:39	KSD
Cobalt Total	<0.05		mg/L	0.05	EPA 6010B	07/20/2007	14:39	07/23/2007	14:39	KSD
Chromium Total	0.11		mg/L	0.01	EPA 6010B	07/20/2007	14:39	07/23/2007	14:39	KSD
Copper Total	0.12		mg/L	0.025	EPA 6010B	07/20/2007	14:39	07/23/2007	14:39	KSD
Iron Total	150		mg/L	10	EPA 6010B	07/23/2007	15:19	07/23/2007	15:19	KSD
* A 1:10 dilution was performed in order to bring the concentration of iron into the calibration range. Reporting limit has been increased to account for dilution factor.										
Mercury by Cold Vapor GW	<0.0002		mg/L	0.0002	EPA 7470A	07/23/2007	12:50	07/24/2007	12:36	ASM
Potassium Total	26		mg/L	5.0	EPA 6010B	07/23/2007	15:19	07/23/2007	15:19	KSD
* A 1:5 dilution was performed in order to bring the concentration of potassium into the calibration range. Reporting limit has been increased to account for dilution factor.										
Magnesium Total	32		mg/L	10	EPA 6010B	07/23/2007	15:19	07/23/2007	15:19	KSD
* A 1:2 dilution was performed in order to bring the concentration of magnesium into the calibration range. Reporting limit has been increased to account for dilution factor.										
Manganese Total	1.7		mg/L	0.015	EPA 6010B	07/20/2007	14:39	07/23/2007	14:39	KSD
Sodium Total	24		mg/L	10	EPA 6010B	07/23/2007	15:19	07/23/2007	15:19	KSD

Analytical results and reports are generated by NEL at the request of and for the exclusive use of the person or entity (client) named on this report. Results, reports or copies of same will not be released by NEL to any third party without the prior express written consent from the client named in t report. This report applies only to those samples taken at the time, place and location referenced by the client. This report makes no express or implied warranty or guarantee as to the sampling methodology used by the individual performing the sampling. The client is solely responsible for th use and interpretation of these results and NEL makes no express or implied warranties as to such use or interpretation. NEL is not able to make a does not make a determination as to the environmental soundness, safety or health of a property from only the samples sent to their laboratory for analysis. Unless otherwise specified by the Client, NEL reserves the right to dispose of all samples after the testing of such samples is sufficiently completed or after a thirty-day period, whichever period is greater. NEL liability extends only to the cost of the testing.

Northeast Laboratory SERVICES
P.O. Box 788
Waterville, Maine 04903-0788

227 China Road
Winslow, Maine 04901

Administrative Offices
Phone: 207-873-7711
Fax: 207-873-7022

Customer Service
Phone: 800-244-6378
Fax: 207-873-7022

ANALYSIS REPORT

Attention: JACKSON KIKER
ECC
33 BOSTON POST ROAD WEST
SUITE 340
MARLBOROUGH MA 01752

Lab ID Number: AJ08865
Project Number: Extraction Well Installation
P.O. Number: EW-5B-NASB
Date Collected: 07/17/2007 05:30 PM
DateReceived: 07/19/2007 10:45 AM
Date Reported: 07/31/2007

Sample Matrix: G-WATER
Sample Description: IDW-EW-5B-NASB
Sample Type: Grab

Parameter	Result	Qualifier	Unit	Detection Limit	Method	Preparation Date/Time		Analysis Date/Time		Analyst
* A 1:10 dilution was performed in order to bring the concentration of sodium into the calibration range. Reporting limit has been increased to account for dilution factor.										
Nickel Total	0.11		mg/L	0.04	EPA 6010B	07/20/2007	14:39	07/23/2007	14:39	KSD
Lead Total	0.039		mg/L	0.009	EPA 6010B	07/20/2007	14:39	07/23/2007	14:39	KSD
pH	8.01		stu	2.00	EPA 150.1	07/19/2007	12:51	07/19/2007	13:02	SMH
Antimony, Furnace-GW	<0.006		mg/L	0.006	EPA 7041	07/20/2007	11:00	07/25/2007	13:10	ASM
Selenium Furnace GW	<0.005		mg/L	0.005	EPA 7740	07/27/2007	11:00	07/30/2007	11:53	ASM
Thallium, Furnace, Groundwater	<0.002		mg/L	0.002	EPA 7841	07/20/2007	11:00	07/26/2007	13:21	ASM
Total Suspended Solids-Std. Methods	86		mg/L	10	SM 2540 D	07/20/2007	13:30	07/23/2007	7:50	DM
* Reporting limits are adjusted for sample volume.										
Vanadium Total	0.12		mg/L	0.05	EPA 6010B	07/20/2007	14:39	07/23/2007	14:39	KSD
Zinc Total	0.25		mg/L	0.02	EPA 6010B	07/20/2007	14:39	07/23/2007	14:39	KSD

Comments

Results are reported on a wet weight basis.

This report shall not be reproduced, except in full, without written permission from Northeast Laboratory Services.

Results meet the requirements of the NELAC standards unless otherwise noted above.

Reviewed By James F. Galasyn Review Date 07/31/2007

James F. Galasyn, Ph.D., Chemistry Lab Manager

Analytical results and reports are generated by NEL at the request of and for the exclusive use of the person or entity (client) named on this report. Results, reports or copies of same will not be released by NEL to any third party without the prior express written consent from the client named in tl report. This report applies only to those samples taken at the time, place and location referenced by the client. This report makes no express or implied warranty or guarantee as to the sampling methodology used by the individual performing the sampling. The client is solely responsible for tl use and interpretation of these results and NEL makes no express or implied warranties as to such use or interpretation. NEL is not able to make a does not make a determination as to the environmental soundness, safety or health of a property from only the samples sent to their laboratory for analysis. Unless otherwise specified by the Client, NEL reserves the right to dispose of all samples after the testing of such samples is sufficiently completed or after a thirty-day period, whichever period is greater. NEL liability extends only to the cost of the testing.

Northeast Laboratory Services
P.O. Box 788
Waterville, Maine 04903-0788

227 China Road
Winslow, Maine 04901

Administrative Offices
Phone: 207-873-7711
Fax: 207-873-7022

Customer Service
Phone: 800-244-8378
Fax: 207-873-7022

ANALYSIS REPORT

Attention: JACKSON KIKER
ECC
33 BOSTON POST ROAD WEST
SUITE 340
MARLBOROUGH MA 01752

Lab ID Number: AJ08866
Project Number: Extraction Well Installation
P.O. Number: EW-5B-NASB
Date Collected: 07/17/2007 05:30 PM
DateReceived: 07/19/2007 10:45 AM
Date Reported: 07/30/2007

Sample Matrix: SOLID
Sample Description: IDW-EW-5B-NASB
Sample Type: Grab

Parameter	Result	Qualifier	Unit	Detection Limit	Method	Preparation Date/Time		Analysis Date/Time		Analyst
PCB in soil										
AROCLOR 1016	<0.04		mg/Kg	0.04	EPA 8082	07/24/2007	11:15	07/25/2007	9:36	ADF
AROCLOR 1221	<0.04		mg/Kg	0.04	EPA 8082	07/24/2007	11:15	07/25/2007	9:36	ADF
AROCLOR 1232	<0.04		mg/Kg	0.04	EPA 8082	07/24/2007	11:15	07/25/2007	9:36	ADF
AROCLOR 1242	<0.04		mg/Kg	0.04	EPA 8082	07/24/2007	11:15	07/25/2007	9:36	ADF
AROCLOR 1248	<0.04		mg/Kg	0.04	EPA 8082	07/24/2007	11:15	07/25/2007	9:36	ADF
AROCLOR 1254	<0.04		mg/Kg	0.04	EPA 8082	07/24/2007	11:15	07/25/2007	9:36	ADF
AROCLOR 1260	<0.04		mg/Kg	0.04	EPA 8082	07/24/2007	11:15	07/25/2007	9:36	ADF
TCMX (Surrogate)	56		%	18	EPA 8082	07/24/2007	11:15	07/25/2007	9:36	ADF
DCB (Surrogate)	84		%	25	EPA 8082	07/24/2007	11:15	07/25/2007	9:36	ADF
* Reporting limits are adjusted for sample weight and total solids. Results are expressed on a dry weight basis.										
DRO in soil										
Diesel Range Organics, Soil	See Attached		mg/Kg	3.6	MEDEP 4.125	07/24/2007	13:00	07/25/2007	22:46	JJC
p-terphenyl (surrogate)	74		%	60	MEDEP 4.125	07/24/2007	13:00	07/25/2007	22:46	JJC
* Reporting limits are adjusted for sample weight and total solids. Results are expressed on a dry weight basis.										
TCLP Herbicides										
2,4,5-TP(Silvex)	<5.0		ug/L	5.0	EPA 8151A	07/23/2007	12:30	07/27/2007	14:01	ADF
2,4-D	<50		ug/L	50	EPA 8151A	07/23/2007	12:30	07/27/2007	14:01	ADF
2,4-Dichlorophenylacetic Acid (Surrogate	38		ug/L	20	EPA 8151A	07/23/2007	12:30	07/27/2007	14:01	ADF
* The initial sample volume was 200 mls, resulting in elevated reporting limits. The sample was rotary extracted by method 1311 starting on 07/20/07.										
TCLP Pesticides										
Heptachlor	<0.25		ug/L	0.25	EPA 8081	07/25/2007	14:00	07/27/2007	16:05	ADF
Heptachlor Epoxide	<0.25		ug/L	0.25	EPA 8081	07/25/2007	14:00	07/27/2007	16:05	ADF
Lindane	<0.25		ug/L	0.25	EPA 8081	07/25/2007	14:00	07/27/2007	16:05	ADF
Chlordane	<0.50		ug/L	0.50	EPA 8081	07/25/2007	14:00	07/27/2007	16:05	ADF
Endrin	<0.50		ug/L	0.50	EPA 8081	07/25/2007	14:00	07/27/2007	16:05	ADF
Methoxychlor	<2.5		ug/L	2.5	EPA 8081	07/25/2007	14:00	07/27/2007	16:05	ADF
Toxaphene	<2.5		ug/L	2.5	EPA 8081	07/25/2007	14:00	07/27/2007	16:05	ADF
2,4,5,6-Tetrachloro-m-xylene (Surrogate)	58		%	29	EPA 8081	07/25/2007	14:00	07/27/2007	16:05	ADF
Decachlorobiphenyl (Surrogate)	70		%	25	EPA 8081	07/25/2007	14:00	07/27/2007	16:05	ADF

Analytical results and reports are generated by NEL at the request of and for the exclusive use of the person or entity (client) named on this report. Results, reports or copies of same will not be released by NEL to any third party without the prior express written consent from the client named in th report. This report applies only to those samples taken at the time, place and location referenced by the client. This report makes no express or implied warranty or guarantee as to the sampling methodology used by the individual performing the sampling. The client is solely responsible for th use and interpretation of these results and NEL makes no express or implied warranties as to such use or interpretation. NEL is not able to make a does not make a determination as to the environmental soundness, safety or health of a property from only the samples sent to their laboratory for analysis. Unless otherwise specified by the Client, NEL reserves the right to dispose of all samples after the testing of such samples is sufficiently completed or after a thirty-day period, whichever period is greater. NEL liability extends only to the cost of the testing.

Northeast Laboratory Services
P.O. Box 788
Waterville, Maine 04903-0788

227 China Road
Winslow, Maine 04901

Administrative Offices
Phone: 207-873-7711
Fax: 207-873-7022

Customer Service
Phone: 800-244-8378
Fax: 207-873-7022

ANALYSIS REPORT

Attention: JACKSON KIKER
ECC
33 BOSTON POST ROAD WEST
SUITE 340
MARLBOROUGH MA 01752

Lab ID Number: AJ08866
Project Number: Extraction Well Installation
P.O. Number: EW-5B-NASB
Date Collected: 07/17/2007 05:30 PM
DateReceived: 07/19/2007 10:45 AM
Date Reported: 07/30/2007

Sample Matrix: SOLID
Sample Description: IDW-EW-5B-NASB
Sample Type: Grab

Parameter	Result	Qualifier	Unit	Detection Limit	Method	Preparation Date/Time		Analysis Date/Time		Analyst
* The initial sample volume was 200 mls, resulting in elevated reporting limits. The sample was rotary extracted by method 1311 starting on 07/20/07.										
TCLP Semi-Volatiles										
1,4-Dichlorobenzene	<0.05		mg/L	0.05	EPA 8270	07/25/2007	10:45	07/26/2007	14:28	JJC
2,4,5-Trichlorophenol	<0.05		mg/L	0.05	EPA 8270	07/25/2007	10:45	07/26/2007	14:28	JJC
2,4,6-Trichlorophenol	<0.05		mg/L	0.05	EPA 8270	07/25/2007	10:45	07/26/2007	14:28	JJC
2,4-Dinitrotoluene	<0.05		mg/L	0.05	EPA 8270	07/25/2007	10:45	07/26/2007	14:28	JJC
Hexachlorobenzene	<0.05		mg/L	0.05	EPA 8270	07/25/2007	10:45	07/26/2007	14:28	JJC
Hexachlorobutadiene	<0.05		mg/L	0.05	EPA 8270	07/25/2007	10:45	07/26/2007	14:28	JJC
Hexachloroethane	<0.05		mg/L	0.05	EPA 8270	07/25/2007	10:45	07/26/2007	14:28	JJC
Nitrobenzene	<0.05		mg/L	0.05	EPA 8270	07/25/2007	10:45	07/26/2007	14:28	JJC
Pyridine	<0.05		mg/L	0.05	EPA 8270	07/25/2007	10:45	07/26/2007	14:28	JJC
Cresols (o,m,p)	<0.10		mg/L	0.10	EPA 8270	07/25/2007	10:45	07/26/2007	14:28	JJC
Pentachlorophenol	<0.25		mg/L	0.25	EPA 8270	07/25/2007	10:45	07/26/2007	14:28	JJC
Phenol-d6 (Surrogate)	23		%	10	EPA 8270	07/25/2007	10:45	07/26/2007	14:28	JJC
2-Fluorophenol (Surrogate)	32		%	21	EPA 8270	07/25/2007	10:45	07/26/2007	14:28	JJC
Nitrobenzene-d5 (Surrogate)	44		%	35	EPA 8270	07/25/2007	10:45	07/26/2007	14:28	JJC
2-Fluorobiphenyl (Surrogate)	50		%	43	EPA 8270	07/25/2007	10:45	07/26/2007	14:28	JJC
Terphenyl-d14 (Surrogate)	65		%	33	EPA 8270	07/25/2007	10:45	07/26/2007	14:28	JJC
2,4,6-Tribromophenol (Surrogate)	68		%	10	EPA 8270	07/25/2007	10:45	07/26/2007	14:28	JJC
* The initial sample volume was 200 mls, resulting in elevated reporting limits. The sample was rotary extracted by method 1311 starting on 07/20/07.										
TCLP Volatiles										
Vinyl Chloride	<0.005		mg/L	0.005	EPA 8260	07/29/2007	11:17	07/29/2007	18:56	AP
1,1-Dichloroethene	<0.025		mg/L	0.025	EPA 8260	07/29/2007	11:17	07/29/2007	18:56	AP
1,2-Dichloroethane	<0.025		mg/L	0.025	EPA 8260	07/29/2007	11:17	07/29/2007	18:56	AP
1,4-Dichlorobenzene	<0.025		mg/L	0.025	EPA 8260	07/29/2007	11:17	07/29/2007	18:56	AP
Benzene	<0.025		mg/L	0.025	EPA 8260	07/29/2007	11:17	07/29/2007	18:56	AP
Carbon Tetrachloride	<0.025		mg/L	0.025	EPA 8260	07/29/2007	11:17	07/29/2007	18:56	AP
Chlorobenzene	<0.025		mg/L	0.025	EPA 8260	07/29/2007	11:17	07/29/2007	18:56	AP
Chloroform	<0.025		mg/L	0.025	EPA 8260	07/29/2007	11:17	07/29/2007	18:56	AP
Tetrachloroethene	<0.025		mg/L	0.025	EPA 8260	07/29/2007	11:17	07/29/2007	18:56	AP
Trichloroethene	<0.025		mg/L	0.025	EPA 8260	07/29/2007	11:17	07/29/2007	18:56	AP

Analytical results and reports are generated by NEL at the request of and for the exclusive use of the person or entity (client) named on this report. Results, reports or copies of same will not be released by NEL to any third party without the prior express written consent from the client named in tl report. This report applies only to those samples taken at the time, place and location referenced by the client. This report makes no express or implied warranty or guarantee as to the sampling methodology used by the individual performing the sampling. The client is solely responsible for tl use and interpretation of these results and NEL makes no express or implied warranties as to such use or interpretation. NEL is not able to make a does not make a determination as to the environmental soundness, safety or health of a property from only the samples sent to their laboratory for analysis. Unless otherwise specified by the Client, NEL reserves the right to dispose of all samples after the testing of such samples is sufficiently completed or after a thirty-day period, whichever period is greater. NEL liability extends only to the cost of the testing.

Northeast Laboratory SERVICES
P.O. Box 788
Waterville, Maine 04903-0788

227 China Road
Winslow, Maine 04901

Administrative Offices
Phone: 207-873-7711
Fax: 207-873-7022

Customer Service
Phone: 800-244-8378
Fax: 207-873-7022

ANALYSIS REPORT

Attention: JACKSON KIKER
ECC
33 BOSTON POST ROAD WEST
SUITE 340
MARLBOROUGH MA 01752

Lab ID Number: AJ08866
Project Number: Extraction Well Installation
P.O. Number: EW-5B-NASB
Date Collected: 07/17/2007 05:30 PM
DateReceived: 07/19/2007 10:45 AM
Date Reported: 07/30/2007

Sample Matrix: SOLID
Sample Description: IDW-EW-5B-NASB
Sample Type: Grab

Parameter	Result	Qualifier	Unit	Detection Limit	Method	Preparation Date/Time		Analysis Date/Time		Analyst
Methyl Ethyl Ketone	<0.05		mg/L	0.05	EPA 8260	07/29/2007	11:17	07/29/2007	18:56	AP
Toluene-d8 (Surrogate)	103		%	82	EPA 8260	07/29/2007	11:17	07/29/2007	18:56	AP
4-Bromofluorobenzene (Surrogate)	105		%	82	EPA 8260	07/29/2007	11:17	07/29/2007	18:56	AP
1,2-Dichloroethane-d4 (Surrogate)	110		%	70	EPA 8260	07/29/2007	11:17	07/29/2007	18:56	AP
* The sample was extracted on 07/27/07 by USEPA method 1311.										
Toxicity Characteristic Leaching Proc	complete		mg/L	-	EPA 1311	07/25/2007	8:41	07/25/2007	8:41	JP
* EPA Method 1311, Federal Register/40 part 261/July 1, 1992 was used to prep this sample and all TCLP samples for analysis.										
Separatory Funnel-BNA Waters	Completed		Date		EPA 3510C	07/25/2007	10:45	07/25/2007	12:30	JLB
Separatory Funnel-Herbicide Waters	Completed		Date		EPA 3510C	07/23/2007	12:30	07/23/2007	15:30	JLB
Separatory Funnel-Pesticide Waters	Completed		Date		EPA 3510C	07/25/2007	14:00	07/25/2007	15:30	JLB
Silver TCLP	<0.05		mg/L	0.05	EPA 6010B	07/25/2007	8:41	07/26/2007	13:27	KSD
Arsenic TCLP	<0.20		mg/L	0.20	EPA 6010B	07/25/2007	8:41	07/26/2007	13:27	KSD
Barium TCLP	0.41		mg/L	0.05	EPA 6010B	07/25/2007	8:41	07/26/2007	13:27	KSD
Cadmium TCLP	<0.05		mg/L	0.05	EPA 6010B	07/25/2007	8:41	07/26/2007	13:27	KSD
Corrosivity	See comment		su	1	SW846-Ch7	07/20/2007	13:30	07/20/2007	13:30	MF
* Based on the pH being greater than 2 and less than 12.5, this sample does not exhibit the hazardous characteristic of corrosivity.										
Chromium TCLP	<0.05		mg/L	0.05	EPA 6010B	07/25/2007	8:41	07/26/2007	13:27	KSD
MEDEP 4.125-Prep Solid	Completed		Date	-	MEDEP 4.125	07/24/2007	13:00	07/24/2007	13:30	KCA
Flash Point	>200F		Deg. F	200	EPA 1010	07/21/2007	10:00	07/21/2007	11:00	KCA
Mercury TCLP	<0.05		mg/L	0.05	EPA 7470A	07/23/2007	12:50	07/24/2007	12:37	ASM
Lead TCLP	<0.05		mg/L	0.05	EPA 6010B	07/25/2007	8:41	07/26/2007	13:27	KSD
Solid pH	7.34		stu	2.00	EPA 9045	07/19/2007	17:20	07/19/2007	17:20	MF
Reactive Cyanide	<10		mg/Kg	10	EPA 7342	07/24/2007	7:40	07/25/2007	13:00	VAL
Reactive Sulfide	<10		mg/Kg	10	EPA 7332	07/24/2007	7:40	07/24/2007	15:30	VAL
Selenium TCLP	<0.25		mg/L	0.25	EPA 6010B	07/25/2007	8:41	07/26/2007	13:27	KSD
Solids, Percent	83		%	0.01	SM 2540G	07/23/2007	9:23	07/23/2007	9:23	JP

Analytical results and reports are generated by NEL at the request of and for the exclusive use of the person or entity (client) named on this report. Results, reports or copies of same will not be released by NEL to any third party without the prior express written consent from the client named in tl report. This report applies only to those samples taken at the time, place and location referenced by the client. This report makes no express or implied warranty or guarantee as to the sampling methodology used by the individual performing the sampling. The client is solely responsible for tl use and interpretation of these results and NEL makes no express or implied warranties as to such use or interpretation. NEL is not able to make a does not make a determination as to the environmental soundness, safety or health of a property from only the samples sent to their laboratory for analysis. Unless otherwise specified by the Client, NEL reserves the right to dispose of all samples after the testing of such samples is sufficiently completed or after a thirty-day period, whichever period is greater. NEL liability extends only to the cost of the testing.

Northeast Laboratory Services
P.O. Box 788
Waterville, Maine 04901-0788

227 China Road
Winslow, Maine 04901

Administrative Offices
Phone: 207-873-7711
Fax: 207-873-7022

Customer Service
Phone: 820022478378
Fax: 207-873-7022

ANALYSIS REPORT

TO: ECC

DATE SAMPLED: 07/17/2007
DATE RECEIVED: 07/19/2007
DATE EXTRACTED: 07/24/2007
DATE ANALYZED: 07/25/2007
DATE REPORTED: 07/30/2007
SAMPLE DESCRIPTION: IDW-EW-5B-NASB
ANALYSIS: DRO in soil

LABORATORY NUMBER: AJ08866
SAMPLE MATRIX: SOLID
ANALYST: JJC
SDG #:

DIESEL RANGE ORGANICS (DRO)

METHOD SUMMARY:

The soil sample was extracted with methylene chloride using a sonication extraction technique (EPA SW-846 Procedure 3550). The combined extract was passed through anhydrous sodium sulfate to remove water and was concentrated using a Zymark Turbovap Concentrator or Kuderna-Danish Concentrator. The final extract and/or dilutions of the extract were analyzed using high-resolution capillary FID Gas Chromatography (J & W DB-1 column, 0.25 micron phase, 0.32mm ID, 30 meter). The sample chromatograms were compared to hydrocarbon standard chromatograms for descriptive purposes and were compared to a DRO component standard for quantification of results.

QUANTITATION/DESCRIPTION:

NEL Sample#	Client Identification	DRO Results mg/kg (ppm)*	Qualifier	% Solid	Surrogate Recovery p-Terphenyl**
AJ08866	IDW-EW-5B-NASB	<3.6		83%	74%

Reporting limits are adjusted for sample weight and total solids. Results are expressed on a dry weight basis.

Results meet the requirements of the NELAC standards

NOTE:

Identification of pristane, phytane, and the n-alkanes is based on chromatographic patterns and retention times on a single column. Identity has not been confirmed. Several petroleum products have chromatographic profiles similar to one another; and product profiles change as weathering occurs. Descriptive/interpretive data has been provided for guidance only. Identity of products (either weathered or unweathered) should not be considered conclusive.

* Quantitation is based on a DRO component standard, utilizing a method defined window from carbon number 10 to 28 inclusive. Results are reported on a dry weight basis. The percent solids determination used in the calculation is listed in a separate column.

**p-Terphenyl is added to the sample prior to extraction as a means of assessing the validity of the analysis.

[ ] In instances in which the material outside the DRO window exceeds 25% of DRO, an estimated total TPH result (aproximately carbon number 9 to 40) will be given in brackets following the DRO result, utilizing the response of a DRO component standard. Only total TPH results exceeding 50 ug/L (ppb) will be listed.

++Quantitation utilizes an extended TPH window to include late eluting unresolved material.

Analysis was conducted according to Maine method 4.1.25, "Method for Determining Diesel Range Organics." The DRO Practical Quantitation Limit is 2 mg/kg (ppm)*.

Reviewed By: James F. Galasyn Date: 7/31/2007

James F. Galasyn, Ph.D., Chemistry Lab Manager

7311

Northeast Laboratory SERVICES
P.O. Box 768
Waterville, Maine 04903-0768

227 China Road
Winslow, Maine 04901

Administrative Offices
Phone: 207-873-7711
Fax: 207-873-7022

Customer Service
Phone: 800-244-8376
Fax: 207-873-7022

ANALYSIS REPORT

Attention: JACKSON KIKER
ECC
33 BOSTON POST ROAD WEST
SUITE 340
MARLBOROUGH MA 01752

Lab ID Number: AJ08866
Project Number: Extraction Well Installation
P.O. Number: EW-5B-NASB
Date Collected: 07/17/2007 05:30 PM
DateReceived: 07/19/2007 10:45 AM
Date Reported: 07/30/2007

Sample Matrix: SOLID
Sample Description: IDW-EW-5B-NASB
Sample Type: Grab

Parameter	Result	Qualifier	Unit	Detection Limit	Method	Preparation Date/Time	Analysis Date/Time	Analyst

Comments:

This report shall not be reproduced, except in full, without written permission from Northeast Laboratory Services.

Results meet the requirements of the NELAC standards unless otherwise noted above.

Reviewed By James F. Galasyn **Review Date:** 07/30/2007
James F. Galasyn, Ph.D., Chemistry Lab Manager

Analytical results and reports are generated by NEL at the request of and for the exclusive use of the person or entity (client) named on this report. Results, reports or copies of same will not be released by NEL to any third party without the prior express written consent from the client named in tl report. This report applies only to those samples taken at the time, place and location referenced by the client. This report makes no express or implied warranty or guarantee as to the sampling methodology used by the individual performing the sampling. The client is solely responsible for tl use and interpretation of these results and NEL makes no express or implied warranties as to such use or interpretation. NEL is not able to make a does not make a determination as to the environmental soundness, safety or health of a property from only the samples sent to their laboratory for analysis. Unless otherwise specified by the Client, NEL reserves the right to dispose of all samples after the testing of such samples is sufficiently completed or after a thirty-day period, whichever period is greater. NEL liability extends only to the cost of the testing.

Northeast Laboratory SERVICES

P.O. Box 788 • Waterville, ME 04903-0788
207-873-7711 / Fax: 207-873-7022

Shipping: 227 China Road
Winslow, Maine 04901

CHAIN OF CUSTODY RECORD

Company Name: ECC

Reporting Address: 33 BOSTON POST ROAD WEST SUITE 340 MARLBOROUGH MA 01752

Client Contact: J. DONOVAN **Phone** 508-229-2270 **Fax**

Billing Name: ECC

Billing Address: SAME AS REPORTING ADDRESS

PO #: EXTRACTION WELL INSTALLATION
Quote #
Project Name EW-5B - NASB

Lab Comments:

Sample Designation	Sample Date/Time	Preservation: 1 H_2SO_4, 2=HNO_3, 3=HCL, 4=NaOH, 5=Thio, 6=4°C, 7=None	Container Size, Type	QTY	Sample Type Code: G = Grab C = Composite	Matrix Code Choose One: GW = Ground Water WW = Waste Water DW = Drinking Water SW = Surface Water O = Oil WP = Wipe S = Soil F = Food Other (Please List)	Analyses Requested	Lab Sample ID
IDW-EW-5B-NASB	7-17-07/1730	3	40 ml VOA	3	G	GW	TCL VOC 8260	
		2	500 ml PLAST.	1	G	GW	TAL METALS	
		7	LITER PLASTIC	1	G	GW	TSS/PH	
		4	LITER PLASTIC	1	G	GW	CYANIDE	
		7	4 OZ JAR	2	C	SOIL	FULL TCLP - WASTE CHARACTERIZATION	
		7	7 OZ JAR	2	C	SOIL	DRO - TPH - TCLP - PCBS WASTE CHARACTERIZATION	
TB-IDW-EW-5B-NASB	LAB SUPPLIED/1330	3	40 ml VOA	3	—	—	TCL VOC 8260	

Notes:

Sampled By: J. DONOVAN

Known hazards associated with samples: POSSIBLE VOC CONTAMINATION - NO ODORS

Relinquished By	Date/Time	Received By	Date/Time	pH
J. Donovan	7-19-07 0900	[illegible]	7/19/07 9:11	
Relinquished By	Date/Time	Received By	Date/Time	Rush Yes 5 days 50% surcharge 2 days 100% surcharge
Relinquished By	Date/Time	Received By	Date/Time	Field Filtered Y / N

The recommended temperature of the internal container is 2-6°C. Do you authorize analysis if the temp is out of range?

Yes No

Chain of Custody must be filled out completely. This includes signature, sample description, analysis requested, date and time sampled.

If not completed, samples will be rejected.

If a sample is hazardous or radioactive, the sample will be returned to the client at the client's expense.
Standard turn around time is 10 business days, depending on season.

Rev. 8/04 Form #NEL 100

Northeast Laboratory SERVICES
P.O. Box 788
Waterville, Maine 04903-0788

227 China Road
Winslow, Maine 04901

Administrative Offices
Phone: 207-873-7711
Fax: 207-873-7022

Customer Service
Phone: 800-244-8378
Fax: 207-873-7022

ANALYSIS REPORT

Attention: JEFF DONOVAN
ECC
33 BOSTON POST ROAD WEST
SUITE 340
MARLBOROUGH MA 01752

Lab ID Number: AJ12154
Project Number: Extraction Well EW-5BNASB
P.O. Number: Extraction Well EW-5BNAS
Date Collected: 09/24/2007 07:50 AM
DateReceived: 09/24/2007 09:10 AM
Date Reported: 09/30/2007

Sample Matrix: SOIL
Sample Description: EW/PZ 1-4A IDW
Sample Type: Composite

Parameter	Result	Qualifier	Unit	Detection Limit	Method	Preparation Date/Time	Analysis Date/Time	Analyst
EPA 8260								
2-Butanone	<1300		ug/Kg	1300	EPA 8260B	09/27/2007 22:26	09/28/2007 6:06	AP
2-Nitropropane	<1300		ug/Kg	1300	EPA 8260B	09/27/2007 22:26	09/28/2007 6:06	AP
Acetone	<1300		ug/Kg	1300	EPA 8260B	09/27/2007 22:26	09/28/2007 6:06	AP
Acrylonitrile	<1300		ug/Kg	1300	EPA 8260B	09/27/2007 22:26	09/28/2007 6:06	AP
Bromomethane	<1300		ug/Kg	1300	EPA 8260B	09/27/2007 22:26	09/28/2007 6:06	AP
Chloroethane	<1300		ug/Kg	1300	EPA 8260B	09/27/2007 22:26	09/28/2007 6:06	AP
Diethyl Ether	<1300		ug/Kg	1300	EPA 8260B	09/27/2007 22:26	09/28/2007 6:06	AP
Tetrahydrofuran	<1300		ug/Kg	1300	EPA 8260B	09/27/2007 22:26	09/28/2007 6:06	AP
2-Chloroethylvinyl Ether	<1900		ug/Kg	1900	EPA 8260B	09/27/2007 22:26	09/28/2007 6:06	AP
Vinyl Acetate	<1900		ug/Kg	1900	EPA 8260B	09/27/2007 22:26	09/28/2007 6:06	AP
Nitrobenzene	<3200		ug/Kg	3200	EPA 8260B	09/27/2007 22:26	09/28/2007 6:06	AP
1,1,1,2-Tetrachloroethane	<630		ug/Kg	630	EPA 8260B	09/27/2007 22:26	09/28/2007 6:06	AP
1,1,1-Trichloroethane	<630		ug/Kg	630	EPA 8260B	09/27/2007 22:26	09/28/2007 6:06	AP
1,1,2,2-Tetrachloroethane	<630		ug/Kg	630	EPA 8260B	09/27/2007 22:26	09/28/2007 6:06	AP
1,1,2-Trichloroethane	<630		ug/Kg	630	EPA 8260B	09/27/2007 22:26	09/28/2007 6:06	AP
1,1-Dichloroethane	<630		ug/Kg	630	EPA 8260B	09/27/2007 22:26	09/28/2007 6:06	AP
1,1-Dichloroethene	<630		ug/Kg	630	EPA 8260B	09/27/2007 22:26	09/28/2007 6:06	AP
1,1-Dichloropropene	<630		ug/Kg	630	EPA 8260B	09/27/2007 22:26	09/28/2007 6:06	AP
1,2,3-Trichlorobenzene	<630		ug/Kg	630	EPA 8260B	09/27/2007 22:26	09/28/2007 6:06	AP
1,2,3-Trichloropropane	<630		ug/Kg	630	EPA 8260B	09/27/2007 22:26	09/28/2007 6:06	AP
1,2,4-Trichlorobenzene	<630		ug/Kg	630	EPA 8260B	09/27/2007 22:26	09/28/2007 6:06	AP
1,2,4-Trimethylbenzene	<630		ug/Kg	630	EPA 8260B	09/27/2007 22:26	09/28/2007 6:06	AP
1,2-Dibromo-3-Chloropropane	<630		ug/Kg	630	EPA 8260B	09/27/2007 22:26	09/28/2007 6:06	AP
1,2-Dibromoethane	<630		ug/Kg	630	EPA 8260B	09/27/2007 22:26	09/28/2007 6:06	AP
1,2-Dichlorobenzene	<630		ug/Kg	630	EPA 8260B	09/27/2007 22:26	09/28/2007 6:06	AP
1,2-Dichloroethane	<630		ug/Kg	630	EPA 8260B	09/27/2007 22:26	09/28/2007 6:06	AP
1,2-Dichloropropane	<630		ug/Kg	630	EPA 8260B	09/27/2007 22:26	09/28/2007 6:06	AP
1,3,5-Trimethylbenzene	<630		ug/Kg	630	EPA 8260B	09/27/2007 22:26	09/28/2007 6:06	AP
1,3-Dichlorobenzene	<630		ug/Kg	630	EPA 8260B	09/27/2007 22:26	09/28/2007 6:06	AP
1,3-Dichloropropane	<630		ug/Kg	630	EPA 8260B	09/27/2007 22:26	09/28/2007 6:06	AP
1,4-Dichlorobenzene	<630		ug/Kg	630	EPA 8260B	09/27/2007 22:26	09/28/2007 6:06	AP
1-Chlorobutane	<630		ug/Kg	630	EPA 8260B	09/27/2007 22:26	09/28/2007 6:06	AP
2,2-Dichloropropane	<630		ug/Kg	630	EPA 8260B	09/27/2007 22:26	09/28/2007 6:06	AP
2-Chlorotoluene	<630		ug/Kg	630	EPA 8260B	09/27/2007 22:26	09/28/2007 6:06	AP
2-Hexanone	<630		ug/Kg	630	EPA 8260B	09/27/2007 22:26	09/28/2007 6:06	AP
4-Chlorotoluene	<630		ug/Kg	630	EPA 8260B	09/27/2007 22:26	09/28/2007 6:06	AP
4-Isopropyltoluene	<630		ug/Kg	630	EPA 8260B	09/27/2007 22:26	09/28/2007 6:06	AP
4-Methyl-2-Pentanone	<630		ug/Kg	630	EPA 8260B	09/27/2007 22:26	09/28/2007 6:06	AP
Allyl Chloride	<630		ug/Kg	630	EPA 8260B	09/27/2007 22:26	09/28/2007 6:06	AP
Benzene	<630		ug/Kg	630	EPA 8260B	09/27/2007 22:26	09/28/2007 6:06	AP
Bromobenzene	<630		ug/Kg	630	EPA 8260B	09/27/2007 22:26	09/28/2007 6:06	AP
Bromochloromethane	<630		ug/Kg	630	EPA 8260B	09/27/2007 22:26	09/28/2007 6:06	AP

16 ~~8~~ 31

Northeast Laboratory SERVICES
P.O. Box 788
Waterville, Maine 04903-0788

227 China Road
Winslow, Maine 04901

ANALYSIS REPORT

Administrative Offices
Phone: 207-873-7711
Fax: 207-873-7022

Customer Service
Phone: 800-244-8378
Fax: 207-873-7022

Attention: JEFF DONOVAN
ECC
33 BOSTON POST ROAD WEST
SUITE 340
MARLBOROUGH MA 01752

Lab ID Number: AJ12154
Project Number: Extraction Well EW-5BNASB
P.O. Number: Extraction Well EW-5BNAS
Date Collected: 09/24/2007 07:50 AM
DateReceived: 09/24/2007 09:10 AM
Date Reported: 09/30/2007

Sample Matrix: SOIL
Sample Description: EW/PZ 1-4A IDW
Sample Type: Composite

Parameter	Result	Qualifier	Unit	Detection Limit	Method	Preparation Date/Time	Analysis Date/Time	Analyst
Bromodichloromethane	<630		ug/Kg	630	EPA 8260B	09/27/2007 22:26	09/28/2007 6:06	AP
Bromoform	<630		ug/Kg	630	EPA 8260B	09/27/2007 22:26	09/28/2007 6:06	AP
Carbon Disulfide	<630		ug/Kg	630	EPA 8260B	09/27/2007 22:26	09/28/2007 6:06	AP
Carbon Tetrachloride	<630		ug/Kg	630	EPA 8260B	09/27/2007 22:26	09/28/2007 6:06	AP
Chlorobenzene	<630		ug/Kg	630	EPA 8260B	09/27/2007 22:26	09/28/2007 6:06	AP
Chloroform	<630		ug/Kg	630	EPA 8260B	09/27/2007 22:26	09/28/2007 6:06	AP
Chloromethane	<630		ug/Kg	630	EPA 8260B	09/27/2007 22:26	09/28/2007 6:06	AP
cis-1,2-Dichloroethene	<630		ug/Kg	630	EPA 8260B	09/27/2007 22:26	09/28/2007 6:06	AP
cis-1,3-Dichloropropene	<630		ug/Kg	630	EPA 8260B	09/27/2007 22:26	09/28/2007 6:06	AP
Dibromochloromethane	<630		ug/Kg	630	EPA 8260B	09/27/2007 22:26	09/28/2007 6:06	AP
Dibromomethane	<630		ug/Kg	630	EPA 8260B	09/27/2007 22:26	09/28/2007 6:06	AP
Dichlorodifluoromethane	<630		ug/Kg	630	EPA 8260B	09/27/2007 22:26	09/28/2007 6:06	AP
Ethyl Methacrylate	<630		ug/Kg	630	EPA 8260B	09/27/2007 22:26	09/28/2007 6:06	AP
Ethylbenzene	<630		ug/Kg	630	EPA 8260B	09/27/2007 22:26	09/28/2007 6:06	AP
Hexachlorobutadiene	<630		ug/Kg	630	EPA 8260B	09/27/2007 22:26	09/28/2007 6:06	AP
Hexachloroethane	<630		ug/Kg	630	EPA 8260B	09/27/2007 22:26	09/28/2007 6:06	AP
Iodomethane	<630		ug/Kg	630	EPA 8260B	09/27/2007 22:26	09/28/2007 6:06	AP
Isopropylbenzene	<630		ug/Kg	630	EPA 8260B	09/27/2007 22:26	09/28/2007 6:06	AP
m,p-Xylene	<630		ug/Kg	630	EPA 8260B	09/27/2007 22:26	09/28/2007 6:06	AP
Methacrylonitrile	<630		ug/Kg	630	EPA 8260B	09/27/2007 22:26	09/28/2007 6:06	AP
Methyl Methacrylate	<630		ug/Kg	630	EPA 8260B	09/27/2007 22:26	09/28/2007 6:06	AP
Methylene Chloride	<630		ug/Kg	630	EPA 8260B	09/27/2007 22:26	09/28/2007 6:06	AP
Naphthalene	<630		ug/Kg	630	EPA 8260B	09/27/2007 22:26	09/28/2007 6:06	AP
n-Butylbenzene	<630		ug/Kg	630	EPA 8260B	09/27/2007 22:26	09/28/2007 6:06	AP
n-Propylbenzene	<630		ug/Kg	630	EPA 8260B	09/27/2007 22:26	09/28/2007 6:06	AP
o-Xylene	<630		ug/Kg	630	EPA 8260B	09/27/2007 22:26	09/28/2007 6:06	AP
Pentachloroethane	<630		ug/Kg	630	EPA 8260B	09/27/2007 22:26	09/28/2007 6:06	AP
sec-Butylbenzene	<630		ug/Kg	630	EPA 8260B	09/27/2007 22:26	09/28/2007 6:06	AP
Styrene	<630		ug/Kg	630	EPA 8260B	09/27/2007 22:26	09/28/2007 6:06	AP
t-Butyl-Methyl Ether	<630		ug/Kg	630	EPA 8260B	09/27/2007 22:26	09/28/2007 6:06	AP
tert-Butylbenzene	<630		ug/Kg	630	EPA 8260B	09/27/2007 22:26	09/28/2007 6:06	AP
Tetrachloroethene	<630		ug/Kg	630	EPA 8260B	09/27/2007 22:26	09/28/2007 6:06	AP
Toluene	<630		ug/Kg	630	EPA 8260B	09/27/2007 22:26	09/28/2007 6:06	AP
trans-1,2-Dichloroethene	<630		ug/Kg	630	EPA 8260B	09/27/2007 22:26	09/28/2007 6:06	AP
trans-1,3-Dichloropropene	<630		ug/Kg	630	EPA 8260B	09/27/2007 22:26	09/28/2007 6:06	AP
trans-1,4-Dichloro-2-Butene	<630		ug/Kg	630	EPA 8260B	09/27/2007 22:26	09/28/2007 6:06	AP
Trichloroethene	<630		ug/Kg	630	EPA 8260B	09/27/2007 22:26	09/28/2007 6:06	AP
Trichlorofluoromethane	<630		ug/Kg	630	EPA 8260B	09/27/2007 22:26	09/28/2007 6:06	AP
Vinyl Chloride	<630		ug/Kg	630	EPA 8260B	09/27/2007 22:26	09/28/2007 6:06	AP
Propionitrile	<6300		ug/Kg	6300	EPA 8260B	09/27/2007 22:26	09/28/2007 6:06	AP
Toluene-d8 (Surrogate)	100		%	82	EPA 8260B	09/27/2007 22:26	09/28/2007 6:06	AP
4-Bromofluorobenzene (Surrogate)	94		%	82	EPA 8260B	09/27/2007 22:26	09/28/2007 6:06	AP
1,2-Dichloroethane-d4 (Surrogate)	98		%	70	EPA 8260B	09/27/2007 22:26	09/28/2007 6:06	AP

17 of 31

Northeast Laboratory SERVICES
P.O. Box 768
Waterville, Maine 04903-0768

227 China Road
Winslow, Maine 04901

Administrative Offices
Phone: 207-873-7711
Fax: 207-873-7022

Customer Service
Phone: 800-244-8378
Fax: 207-873-7022

ANALYSIS REPORT

Attention: JEFF DONOVAN
ECC
33 BOSTON POST ROAD WEST
SUITE 340
MARLBOROUGH MA 01752

Lab ID Number: AJ12154
Project Number: Extraction Well EW-5BNASB
P.O. Number: Extraction Well EW-5BNAS
Date Collected: 09/24/2007 07:50 AM
DateReceived: 09/24/2007 09:10 AM
Date Reported: 09/30/2007

Sample Matrix: SOIL
Sample Description: EW/PZ 1-4A IDW
Sample Type: Composite

Parameter	Result	Qualifier	Unit	Detection Limit	Method	Preparation Date/Time	Analysis Date/Time	Analyst
★ *Reporting limits are adjusted for sample weight and total solids. Results are expressed on a dry weight basis.*								
EPA 8270 in Soil								
1,2,4-Trichlorobenzene	<0.42		mg/Kg	0.42	EPA 8270C	09/26/2007 12:45	09/26/2007 21:46	JJC
1,2-Dichlorobenzene	<0.42		mg/Kg	0.42	EPA 8270C	09/26/2007 12:45	09/26/2007 21:46	JJC
1,3-Dichlorobenzene	<0.42		mg/Kg	0.42	EPA 8270C	09/26/2007 12:45	09/26/2007 21:46	JJC
1,4-Dichlorobenzene	<0.42		mg/Kg	0.42	EPA 8270C	09/26/2007 12:45	09/26/2007 21:46	JJC
2,4,5-Trichlorophenol	<0.42		mg/Kg	0.42	EPA 8270C	09/26/2007 12:45	09/26/2007 21:46	JJC
2,4,6-Trichlorophenol	<0.42		mg/Kg	0.42	EPA 8270C	09/26/2007 12:45	09/26/2007 21:46	JJC
2,4-Dichlorophenol	<0.42		mg/Kg	0.42	EPA 8270C	09/26/2007 12:45	09/26/2007 21:46	JJC
2,4-Dimethylphenol	<0.42		mg/Kg	0.42	EPA 8270C	09/26/2007 12:45	09/26/2007 21:46	JJC
2,4-Dinitrotoluene	<0.42		mg/Kg	0.42	EPA 8270C	09/26/2007 12:45	09/26/2007 21:46	JJC
2,6-Dinitrotoluene	<0.42		mg/Kg	0.42	EPA 8270C	09/26/2007 12:45	09/26/2007 21:46	JJC
2-Chloronaphthalene	<0.42		mg/Kg	0.42	EPA 8270C	09/26/2007 12:45	09/26/2007 21:46	JJC
2-Chlorophenol	<0.42		mg/Kg	0.42	EPA 8270C	09/26/2007 12:45	09/26/2007 21:46	JJC
2-Methylnaphthalene	<0.42		mg/Kg	0.42	EPA 8270C	09/26/2007 12:45	09/26/2007 21:46	JJC
2-Methylphenol (o-cresol)	<0.42		mg/Kg	0.42	EPA 8270C	09/26/2007 12:45	09/26/2007 21:46	JJC
2-Nitrophenol	<0.42		mg/Kg	0.42	EPA 8270C	09/26/2007 12:45	09/26/2007 21:46	JJC
3&4-Methylphenol (m&p-cresol)	<0.42		mg/Kg	0.42	EPA 8270C	09/26/2007 12:45	09/26/2007 21:46	JJC
4-Bromophenylphenylether	<0.42		mg/Kg	0.42	EPA 8270C	09/26/2007 12:45	09/26/2007 21:46	JJC
4-Chlorophenylphenylether	<0.42		mg/Kg	0.42	EPA 8270C	09/26/2007 12:45	09/26/2007 21:46	JJC
Acenaphthene	<0.42		mg/Kg	0.42	EPA 8270C	09/26/2007 12:45	09/26/2007 21:46	JJC
Acenaphthylene	<0.42		mg/Kg	0.42	EPA 8270C	09/26/2007 12:45	09/26/2007 21:46	JJC
Aniline	<0.42		mg/Kg	0.42	EPA 8270C	09/26/2007 12:45	09/26/2007 21:46	JJC
Anthracene	<0.42		mg/Kg	0.42	EPA 8270C	09/26/2007 12:45	09/26/2007 21:46	JJC
Azobenzene	<0.42		mg/Kg	0.42	EPA 8270C	09/26/2007 12:45	09/26/2007 21:46	JJC
Benzo(a)anthracene	<0.42		mg/Kg	0.42	EPA 8270C	09/26/2007 12:45	09/26/2007 21:46	JJC
Benzo(a)pyrene	<0.42		mg/Kg	0.42	EPA 8270C	09/26/2007 12:45	09/26/2007 21:46	JJC
Benzo(b)fluoranthene	<0.42		mg/Kg	0.42	EPA 8270C	09/26/2007 12:45	09/26/2007 21:46	JJC
Benzo(g,h,i)perylene	<0.42		mg/Kg	0.42	EPA 8270C	09/26/2007 12:45	09/26/2007 21:46	JJC
Benzo(k)fluoranthene	<0.42		mg/Kg	0.42	EPA 8270C	09/26/2007 12:45	09/26/2007 21:46	JJC
Benzylbutylphthalate	<0.42		mg/Kg	0.42	EPA 8270C	09/26/2007 12:45	09/26/2007 21:46	JJC
Bis(2-chloroethoxy) methane	<0.42		mg/Kg	0.42	EPA 8270C	09/26/2007 12:45	09/26/2007 21:46	JJC
Bis(2-chloroethyl) ether	<0.42		mg/Kg	0.42	EPA 8270C	09/26/2007 12:45	09/26/2007 21:46	JJC
Carbazole	<0.42		mg/Kg	0.42	EPA 8270C	09/26/2007 12:45	09/26/2007 21:46	JJC
Chrysene	<0.42		mg/Kg	0.42	EPA 8270C	09/26/2007 12:45	09/26/2007 21:46	JJC
Dibenz(a,h)anthracene	<0.42		mg/Kg	0.42	EPA 8270C	09/26/2007 12:45	09/26/2007 21:46	JJC
Dibenzofuran	<0.42		mg/Kg	0.42	EPA 8270C	09/26/2007 12:45	09/26/2007 21:46	JJC
Diethylphthalate	<0.42		mg/Kg	0.42	EPA 8270C	09/26/2007 12:45	09/26/2007 21:46	JJC
Dimethylphthalate	<0.42		mg/Kg	0.42	EPA 8270C	09/26/2007 12:45	09/26/2007 21:46	JJC
Di-n-butylphthalate	<0.42		mg/Kg	0.42	EPA 8270C	09/26/2007 12:45	09/26/2007 21:46	JJC
Di-n-octylphthalate	<0.42		mg/Kg	0.42	EPA 8270C	09/26/2007 12:45	09/26/2007 21:46	JJC
Fluoranthene	<0.42		mg/Kg	0.42	EPA 8270C	09/26/2007 12:45	09/26/2007 21:46	JJC
Fluorene	<0.42		mg/Kg	0.42	EPA 8270C	09/26/2007 12:45	09/26/2007 21:46	JJC

Northeast Laboratory SERVICES
P.O. Box 766
Waterville, Maine 04903-0766

227 China Road
Winslow, Maine 04901

ANALYSIS REPORT

Administrative Offices
Phone: 207-873-7711
Fax: 207-873-7022

Customer Service
Phone: 800-244-8378
Fax: 207-873-7022

Attention: JEFF DONOVAN
ECC
33 BOSTON POST ROAD WEST
SUITE 340
MARLBOROUGH MA 01752

Lab ID Number: AJ12154
Project Number: Extraction Well EW-5BNASB
P.O. Number: Extraction Well EW-5BNAS
Date Collected: 09/24/2007 07:50 AM
DateReceived: 09/24/2007 09:10 AM
Date Reported: 09/30/2007

Sample Matrix: SOIL
Sample Description: EW/PZ 1-4A IDW
Sample Type: Composite

Parameter	Result	Qualifier	Unit	Detection Limit	Method	Preparation Date/Time		Analysis Date/Time		Analyst
Hexachlorobenzene	<0.42		mg/Kg	0.42	EPA 8270C	09/26/2007	12:45	09/26/2007	21:46	JJC
Hexachlorobutadiene	<0.42		mg/Kg	0.42	EPA 8270C	09/26/2007	12:45	09/26/2007	21:46	JJC
Hexachlorocyclopentadiene	<0.42		mg/Kg	0.42	EPA 8270C	09/26/2007	12:45	09/26/2007	21:46	JJC
Hexachloroethane	<0.42		mg/Kg	0.42	EPA 8270C	09/26/2007	12:45	09/26/2007	21:46	JJC
Indeno(1,2,3-cd)pyrene	<0.42		mg/Kg	0.42	EPA 8270C	09/26/2007	12:45	09/26/2007	21:46	JJC
Isophorone	<0.42		mg/Kg	0.42	EPA 8270C	09/26/2007	12:45	09/26/2007	21:46	JJC
Naphthalene	<0.42		mg/Kg	0.42	EPA 8270C	09/26/2007	12:45	09/26/2007	21:46	JJC
Nitrobenzene	<0.42		mg/Kg	0.42	EPA 8270C	09/26/2007	12:45	09/26/2007	21:46	JJC
N-Nitrosodi-n-propyl amine	<0.42		mg/Kg	0.42	EPA 8270C	09/26/2007	12:45	09/26/2007	21:46	JJC
N-Nitrosodiphenylamine	<0.42		mg/Kg	0.42	EPA 8270C	09/26/2007	12:45	09/26/2007	21:46	JJC
Phenanthrene	<0.42		mg/Kg	0.42	EPA 8270C	09/26/2007	12:45	09/26/2007	21:46	JJC
Phenol	<0.42		mg/Kg	0.42	EPA 8270C	09/26/2007	12:45	09/26/2007	21:46	JJC
Pyrene	<0.42		mg/Kg	0.42	EPA 8270C	09/26/2007	12:45	09/26/2007	21:46	JJC
Benzyl alcohol	<0.42		mg/Kg	0.83	EPA 8270C	09/26/2007	12:45	09/26/2007	21:46	JJC
3,3-Dichlorobenzidine	<0.83		mg/Kg	0.83	EPA 8270C	09/26/2007	12:45	09/26/2007	21:46	JJC
4-Chloro-3-methylphenol	<0.83		mg/Kg	0.83	EPA 8270C	09/26/2007	12:45	09/26/2007	21:46	JJC
4-Chloroaniline	<0.83		mg/Kg	0.83	EPA 8270C	09/26/2007	12:45	09/26/2007	21:46	JJC
Bis(2-chloroisopropyl) ether	<0.83		mg/Kg	0.83	EPA 8270C	09/26/2007	12:45	09/26/2007	21:46	JJC
N-Nitrosodimethylamine	<0.83		mg/Kg	0.83	EPA 8270C	09/26/2007	12:45	09/26/2007	21:46	JJC
2,4-Dinitrophenol	<2.0		mg/Kg	2.0	EPA 8270C	09/26/2007	12:45	09/26/2007	21:46	JJC
2-Nitroaniline	<2.0		mg/Kg	2.0	EPA 8270C	09/26/2007	12:45	09/26/2007	21:46	JJC
3-Nitroaniline	<2.0		mg/Kg	2.0	EPA 8270C	09/26/2007	12:45	09/26/2007	21:46	JJC
4,6-Dinitro-2-methylphenol	<2.0		mg/Kg	2.0	EPA 8270C	09/26/2007	12:45	09/26/2007	21:46	JJC
4-Nitroaniline	<2.0		mg/Kg	2.0	EPA 8270C	09/26/2007	12:45	09/26/2007	21:46	JJC
4-Nitrophenol	<2.0		mg/Kg	2.0	EPA 8270C	09/26/2007	12:45	09/26/2007	21:46	JJC
Benzoic acid	<2.0		mg/Kg	2.0	EPA 8270C	09/26/2007	12:45	09/26/2007	21:46	JJC
Pentachlorophenol	<2.0		mg/Kg	2.0	EPA 8270C	09/26/2007	12:45	09/26/2007	21:46	JJC
Benzidine	<4.2		mg/Kg	4.2	EPA 8270C	09/26/2007	12:45	09/26/2007	21:46	JJC
Bis(2-ethylhexyl)phthalate	0.56		mg/Kg	0.42	EPA 8270C	09/26/2007	12:45	09/26/2007	21:46	JJC
2-Fluorophenol (Surrogate)	49		%	25	EPA 8270C	09/26/2007	12:45	09/26/2007	21:46	JJC
Terphenyl-d14 (Surrogate)	54		%	18	EPA 8270C	09/26/2007	12:45	09/26/2007	21:46	JJC
Nitrobenzene-d5 (Surrogate)	54		%	23	EPA 8270C	09/26/2007	12:45	09/26/2007	21:46	JJC
2-Fluorobiphenyl (Surrogate)	55		%	30	EPA 8270C	09/26/2007	12:45	09/26/2007	21:46	JJC
Phenol-d6(Surrogate)	63		%	24	EPA 8270C	09/26/2007	12:45	09/26/2007	21:46	JJC
2,4,6-Tribromophenol (Surrogate)	71		%	19	EPA 8270C	09/26/2007	12:45	09/26/2007	21:46	JJC

** Reporting limits are adjusted for sample weight and total solids. Results are expressed on a dry weight basis.*

Silver Total	<0.49		mg/Kg	0.49	EPA 6010B	09/27/2007	10:00	09/28/2007	16:57	JP
Arsenic Total	<0.98		mg/Kg	0.98	EPA 6010B	09/27/2007	10:00	09/28/2007	16:57	JP
Barium Total	24		mg/Kg	0.98	EPA 6010B	09/27/2007	10:00	09/28/2007	16:57	JP
Cadmium Total	<0.98		mg/Kg	0.98	EPA 6010B	09/27/2007	10:00	09/28/2007	16:57	JP
Chromium Total	14		mg/Kg	0.98	EPA 6010B	09/27/2007	10:00	09/28/2007	16:57	JP
Mercury Total	<0.016		mg/Kg	0.016	EPA 7471A	09/26/2007	14:10	09/27/2007	14:20	ASM

Northeast Laboratory SERVICES
P.O. Box 788
Waterville, Maine 04903-0788

227 China Road
Winslow, Maine 04901

ANALYSIS REPORT

Administrative Offices
Phone: 207-873-7711
Fax: 207-873-7022

Customer Service
Phone: 800-244-8378
Fax: 207-873-7022

Attention: JEFF DONOVAN
ECC
33 BOSTON POST ROAD WEST
SUITE 340
MARLBOROUGH MA 01752

Lab ID Number: AJ12154
Project Number: Extraction Well EW-5BNASB
P.O. Number: Extraction Well EW-5BNAS
Date Collected: 09/24/2007 07:50 AM
DateReceived: 09/24/2007 09:10 AM
Date Reported: 09/30/2007

Sample Matrix: SOIL
Sample Description: EW/PZ 1-4A IDW
Sample Type: Composite

Parameter	Result	Qualifier	Unit	Detection Limit	Method	Preparation Date/Time		Analysis Date/Time		Analyst
Lead Total Solid	1.2		mg/Kg	0.98	EPA 6010B	09/27/2007	10:00	09/28/2007	16:57	JP
Selenium Total	<4.9		mg/Kg	4.9	EPA 6010B	09/27/2007	10:00	09/28/2007	16:57	JP
Solids, Percent	79		%	0.01	SM 2540G	09/27/2007	8:42	09/27/2007	8:42	JP

Comments:

This report shall not be reproduced, except in full, without written permission from Northeast Laboratory Services.

Results meet the requirements of the NELAC standards unless otherwise noted above.

Reviewed By James F. Galasyn **Review Date:** 09/30/2007

James F. Galasyn, Ph.D., Chemistry Lab Manager

Analytical results and reports are generated by NEL at the request of and for the exclusive use of the person or entity (client) named on this report. Results, reports or copies of same will not be released by NEL to any third party without the prior express written consent from the client named in this report. This report applies only to those samples taken at the time, place and location referenced by the client. This report makes no express or implied warranty or guarantee as to the sampling methodology used by the individual performing the sampling. The client is solely responsible for the use and interpretation of these results and NEL makes no express or implied warranties as to such use or interpretation. NEL is not able to make and does not make a determination as to the environmental soundness, safety or health of a property from only the samples sent to their laboratory for analysis. Unless otherwise specified by the Client, NEL reserves the right to dispose of all samples after the testing of such samples is sufficiently completed or after a thirty-day period, whichever period is greater. NEL liability extends only to the cost of the testing.

20 of 31

Northeast Laboratory SERVICES

PO Box 788, Waterville ME 04903-0788
Shipping: Rt 137, China Rd., Winslow, ME 04901
Phone: 207-873-7711 / Fax: 207-873-7022

CHAIN OF CUSTODY RECORD

Company Name: ECC

Reporting & Billing Address: 33 BOSTON POST RD WEST SUITE 340 MARLBOROUGH MA 01752

Phone: 508-229-2270 Fax

Client Contact: JEFF DONOVAN

PO #

Quote #

Project Name: NASB IDW

Lab Comments:

Preservation: 1-H_2SO_4, 2-HNO_3, 3-HCL 4-NaOH 5-Thio 6-4°C 7-None

Container Size, type: 8 oz GLASS

Sample Type: G/C

Matrix Code: GW-Ground Water, WW-Waste Water, DW-Drinking Water, SW-Surface Water, Other: Please List

Sample Identification	Sample Date/Time	Preservation	Container Size, type	Sample Type	QTY	Matrix Code	Analyses Requested	Lab Id Number
M. BROOK IDW DRUMS 1-4	9-24-07 0700	7		C	1	SOIL	RCRA 8 METALS, VOC 8270, VOC 8260	AJ12151.1
M. BROOK IDW DRUMS 5-8	9-24-07 0710				1			52.1
M. BROOK IDW DRUMS 9-12	9-24-07 0715				1			53.1
EW/PZ 1-44 IDW	9-24-07 0750				1			54.1
SITE 2 IDW	9-24-07 0730				1			55.1
SITE 9 IDW	9-24-07 0745				1			56.1

*PRESERVE VOC'S UPON RECEIPT AT LAB PER PAM DOUGHTY

ANY QUES CALL JEFF 508-509-1784

Known Hazards associated with samples: NONE

5.1°C

Relinquished By	Date/Time	Received By	Date/Time	Rush
[signature]	9-24-07 0840	[signature]	9/24/07 8:10	Y / (N)
[signature]	9/24/07 9:10	[signature]	9/24/07 09:10	

Waste Information Profile Form

ENPRO Services of Maine, Inc.
106 Main Street
S. Portland, ME 04106
Phone #: (207) 799-0850 Fax #: (207) 799-5565
MED019051069

ENPRO Services of Vermont, Inc
51 Avenue D
Williston, VT 05495
Phone #: (802) 860-1200
VTR000517052

Profile #: BNAS - 001

Classification Code: _____

1. Generator Information:
Generator Name: BRUNSWICK NAVAL AIR STATION
Mailing Address: DPW, 437 HUEY DR., BLDG 53
City: BRUNSWICK State: ME Zip: 04011 Phone: 207-921-1709
Site Address: DPW, 437 HUEY DR., BLDG 53
City: BRUNSWICK State: ME Zip: 04011
Technical Contact: _____ Phone: _____
Site EPA ID: ME8170022018 NAICS Code: _____

2. Billing Information:
Customer Name: Enpro Services Inc
Address: _____
City: _____ State: _____ Zip: _____
Billing Contact: _____ Email: _____
Phone: _____ Fax: _____

3. Waste Description:
Common Name of Waste: SOIL CUTTINGS
Process Generating Waste DRILL CUTTINGS

4. Physical & Chemical Properties
Color: Brown Odor ☒ None ☐ Mild ☐ Strong Describe: None

Flash Point (F°)	BTU/lb		Free Liquids? ☐Yes ☒ No
☐ <100	☒ <2000	☒ Solid	100.00 % Solids _____ % Liquids
☐ ≥100-140	☐ 2,000-6,000	☐ Liquid	Will waste dump out of drums? ☐Yes ☒ No
☐ ≥140-200	☐ >6,000-10,000	☐ Sludge	Is the waste pumpable? ☐Yes ☒ No
☒ >200		☐ Semi-solid	Debris?(List type in Section 7) ☐Yes ☒ No
		☐ Powder	Is the waste dusty? ☐Yes ☒ No
		☐ Gas	

Specific Gravity	Viscosity	pH	Other Components
☐ < 0.8 (Light oil)	☐ Low (Water)	☐ ≤ 2.0	Total cyanides (ppm) 0
☐ 0.8-1.0 (Water based)	☐ Med (Pump on)	☐ >2.0-5	Total sulfides (ppm)
☒ > 1.0 (Chlorinated Solvents)	☒ High (Molasses)	☒ >5-9	PCBs (ppm)
		☐ >9-12.49	Total Halogens /HOC (%)
		☐ ≥ 12.5	Total VOC (ppm)

5. Hazardous Properties: (Check all that apply)

☒ None	☐ Radioactive	☐ Pyrophoric	☐ Oxidizer
☐ Water Reactive	☐ Dioxins	☐ Explosive	☐ Medical Waste/Infectious
☐ Shock Sensitive	☐ Air Reactive	☐ Polymerizable	☐ Fertilizer
☐ Asbestos	☐ Benzene NESHAP	☐ Pesticide/Herbicide	☐ Peroxide Forming Compound

6. Regulatory Status (Check all that apply)

Y	N	
☐	☒	USEPA Hazardous Waste per 40 CFR 261 (If yes list codes) _____
☐	☒	Do any state waste codes apply? (If yes list codes) NONE
☒	☐	Is this waste subject to land ban restrictions ?
		Is this a ☐ wastewater ☒ non wastewater
☐	☒	If DOO1-D043, are any underlying hazardous constituents (UHC) present
☐	☒	Does this waste contain VOC's ≥ 500 ppm

Form Code _____ Source Code _____

ENPRO

Profile #: BNAS - 001

7. Composition of Waste: (List all haz. And non-haz. Constituents)

SOIL	99.00 - 100.00	%
Water	0.00 - 1.00	%
	-	%
	-	%
	-	%
	-	%

8. DOT Shipping Information: (include PG, UN/NA, and Haz. Class)
NON DOT, NON RCRA REGULATED MATERIAL

Poison Inhalation Hazard: ☐ YES ☒ NO Zone: _____ 85gl. overpaks 9

Method of Shipment: ☐ Bulk Liquid ☐ Bulk Solid ☒ Drums ☐ Other Container type size: 55 Gallon Metal Drums 8

Volume per shipment: 0 ☐ Gallons ☐ Tons ☐ Drums ☒ Other P 5000

Frequency: ☐ One Time ☐ Weekly ☐ Monthly ☐ Quarterly ☐ Yearly ☐ Other _____

Does this material require any special handling? ☐ Yes ☒ No If yes, explain:

9. Inorganic Metals: ☒ None ☐ TCLP ☐ Totals ☐ Generator Knowledge in mg/l

D004 Arsenic (5mg/l)		D011 Silver (5mg/l)		Manganese	
D005 Barium (100mg/l)		Aluminum		Molybdenum	
D006 Cadmium (1mg/l)		Antimony		Nickle	
D007 Chromium (5mg/l)		Beryllium		Thallium	
D007 Chromium-Hex		Cobalt		Tin	
D008 Lead (5mg/l)		Copper		Zinc	
D009 Mercury (0.2mg/l)					
D010 Selenium (1mg/l)					

10. Organic Compounds ☒ None ☐ TCLP ☐ Totals ☐ Generator Knowledge in mg/l

D012 Endrin (0.02)		D023 o-Cresol (200)		D034 Hexachloroethane (3.0)	
D013 Lindane (0.4)		D024 m-Cresol (200)		D035 Methyl ethyl ketone (200)	
D014 Methoxychlor (10)		D025 p-Cresol (200)		D036 Nitrobenzene (2)	
D015 Toxaphene (0.5)		D026 Cresol (200)		D037 Pentrachloroethylene (100)	
D016 2,4-D (10)		D027 1,4-Dichlorobenzene (7.5)		D038 Pyridine (5)	
D017 2,4,5 TP Silvex (1)		D028 1,2- Dichloroethane (0.5)		D039 Tetrachlordethylene (0.7)	
D018 Benzene (0.5)		D029 1,1-Dichloroethylene (0.7)		D040 Trichloroethylene	
D019 Carbon Tetrachloride (0.5)		D030 2,4 Dinitrotoluene (0.3)		D041 2,4,5-Trichlorophenol	
D020 Chlordane (0.03)		D031 Heptachlor (& epoxide) (0.008)		D042 2,4,6-Trichlorophenol	
D021 Chlorobenzene (100)		D032 Hexachlorobenzene (0.13)		D043 Vinyl Chloride	
D022 Chloroform (6.0)		D033 Hexachlorobutadiene (0.5)			

11. Attached Documents: ☐ Lab Data ☐ MSDS ☐ Packing List ☐ Other

12. Generator Certification: I hereby certify that I am the agent of the generator, and warrant on behalf of the generator, that all information submitted herein and attached documentation contains true, accurate and complete description of this material. Any sample submitted for analysis is representative of the material being offered for approval. All relevant information regarding known or suspected hazards in the possession of the generator has been disclosed. I will notify ENPRO of any changes in generator status, any information on this form, or any information on attachments. This certification and signature apply to this form, to all attachments checked in Section 11, and to the land disposal restriction notification (LDR) generated from this information.

Signature	Printed Name	Title	Date
Mark Carver	Mark Carver	Plant Operator	11/26/07

APPENDIX F

Survey Data

HORIZONTAL LOCATION OF TRENCH FOR GROUNDWATER DISCHARGE PIPE AND ELECTRICAL CONDUIT - EW-05B TO EW-05A

ID	X_UTM	Y_UTM	Source	Date
1	425945.506	4859787.187	Handheld GPS	7/14/2009
2	425945.079	4859777.94	Handheld GPS	7/14/2009
3	425942.809	4859771	Handheld GPS	7/14/2009
4	425939.223	4859762.833	Handheld GPS	7/14/2009
5	425934.845	4859752.804	Handheld GPS	7/14/2009
6	425928.808	4859743.883	Handheld GPS	7/14/2009
7	425923.905	4859735.288	Handheld GPS	7/14/2009
8	425916.301	4859722.348	Handheld GPS	7/14/2009
9	425913.335	4859714.061	Handheld GPS	7/14/2009
10	425905.934	4859699.968	Handheld GPS	7/14/2009
11	425901.265	4859682.478	Handheld GPS	7/14/2009
12	425901.506	4859668.863	Handheld GPS	7/14/2009
13	425903.907	4859657.378	Handheld GPS	7/14/2009
14	425907.253	4859646.174	Handheld GPS	7/14/2009
15	425909.336	4859638.539	Handheld GPS	7/14/2009
EW-05B	425910.391	4859636.591	Handheld GPS	7/14/2009

Notes:
Datum: NAD 1983 Zone 19N in meters

Groundwater discharge pipe is approximately 5 ft bgs
Electrical conduit is approximately 2.5 ft bgs

Magnetic locating strip and red electrical warning tape placed in trench approximately 1 ft bgs.

APPENDIX G

Site Photos

SITE PHOTOS
Extraction Well EW-05B Installation

Photo 1 – Beginning excavation around EW-05B for vault installation.

Photo 2 – Area around EW-05B excavated for vault installation.
Excavation is approximately 6 ft deep.

Photo 3 – Photo of EW-05B prior to cutting well riser. Orange paint marks cut line. This will leave approximately 2 ft of riser stick up above the vault floor when completed.

Photo 4 – View of excavation showing trench and EW-05B riser in background. View is looking southeast.

Photo 5 -- View EW-05B following cutting of riser. Approximately 6 inches of crushed stone has been placed in the bottom of the excavation prior to setting of the concrete vault.

Photo 6 – View of EW-05B after placement of bottom of vault. Black waterproof sealant tape has been put in place. Cutout for groundwater discharge pipe access is on right side of vault.

Photo 7 – View of extraction well vault with access hatch. Concrete electrical pull box is next to vault. View is looking northwest.

Photo 8 – View of trench with black groundwater discharge line and grey electrical conduits. Conduits were taken out of trench prior to backfilling over discharge line.
View is looking north towards EW-05A.

Photo 9 – View inside EW-05B showing groundwater discharge pipe and electrical conduits in place.

Photo 10 – View of EW-05B vault with conduits and groundwater discharge pipe in place. Backfill has been placed over discharge pipe.

Photo 11 – View of electrical conduit in place in trench. View is looking north towards EW-05A.

Photo 12 – Photo showing completed installation of EW-05B vault. View is looking northwest.