N60087.AR.002206
NAS BRUNSWICK
5090.3a

HIPOX PILOT STUDY REPORT GROUNDWATER EXTRACTION AND TREATMENT SYSTEM

DRAFT ACTING AS FINAL NAS BRUNSWICK ME

4/19/2010

H&S ENVIRONMENTAL

DRAFT
HiPOx PILOT STUDY REPORT
GROUNDWATER EXTRACTION AND TREATMENT SYSTEM

Naval Air Station
Brunswick, Maine

Prepared for:

Department of the Navy
Naval Facilities Engineering Command
BRAC Program Management Office - Northeast
4911 South Broad Street
Philadelphia, Pennsylvania 19112-1303

Contract No. N40085-09-D-7035
Contract Task Order No. 002

April 2010

Prepared for H&S Environmental by

ECC
33 Boston Post Road West, Suite 340
Marlborough, MA 01752

DRAFT
HiPOx PILOT STUDY REPORT
GROUNDWATER EXTRACTION AND TREATMENT SYSTEM

Naval Air Station
Brunswick, Maine

Prepared for:

Department of the Navy
Naval Facilities Engineering Command
BRAC Program Management Office - Northeast
4911 South Broad Street
Philadelphia, Pennsylvania 19112-1303

Prepared by:

ECC
33 Boston Post Road West, Suite 340
Marlborough, Massachusetts 01752

19 April 2010

Al Easterday, P.G. — Date
Senior Project Manager

19 April 2010

Curtis J. Varner, P.E. — Date
Project Manager/Project Engineer

CONTENTS

Page

LIST OF FIGURES
LIST OF TABLES

1. INTRODUCTION 1-1

1.1 Project Identification 1-1
1.2 Background Information 1-1

1.2.1 Summary of GWETS Operations 1-2
1.2.2 HiPOx System Installation and Pilot Testing 1-3
1.2.3 Evaluation & Optimization of HiPOx System with Liquid-Phase GAC 1-4

1.3 Goals & Objectives 1-5
1.4 Organization 1-5

2. HiPOx PILOT SYSTEM INSTALLATION & COMMISSIONING 2-1

2.1 Overview 2-1
2.2 Equipment Delivery and Placement of Skids 2-1
2.3 Mechanical & Electrical Work 2-2

2.3.1 Mechanical Work 2-2
2.3.2 Electrical Work 2-3

2.4 Commissioning 2-3

3. HiPOx PILOT TESTING 3-1

3.1 Overview 3-1
3.2 HiPOx System Prove-out 3-1
3.3 Twelve Week Pilot Test 3-2

3.3.1 Alternate GWETS Treatment Train Evaluation 3-4
3.3.2 Evaluation of GWETS Electrical Demand 3-6

3.4 Summary of GWETS Performance Since Activation of EW-05B 3-7

4. RECOMMENDATIONS 4-1

4.1 HiPOx System 4-1
4.2 GWETS Operations 4-1

APPENDICES

APPENDIX A: APT CUT-SHEETS & HiPOx DESIGN DRAWINGS
APPENDIX B: FORM I's
APPENDIX C: PHOTOLOG
APPENDIX D: E.S. BOULES CO. ELECTRIC POWER USAGE REPORT
APPENDIX E: RESPONSE TO COMMENTS AND REGULATOR CONCURRENCE
APPENDIX F: MEDEP EDD

LIST OF FIGURES

Number	Title
1-1	Site Location Map, Building 50, Naval Air Station, Brunswick, Maine
1-2	HiPOx Mechanical Installation (As-built), Building 50, Naval Air Station Brunswick, Maine
1-3	GWETS with Air-Stripper and GAC
1-4	GWETS with HiPOx and Air-Stripper
1-5	GWETS with HiPOx and Liquid-Phase GAC
2-1	HiPOx Electrical Installation (As-built), Building 50, Naval Air Station Brunswick, Maine
3-1	Volatile Organic Compound Removal Rate & Cumulative GWETS Mass Removal, Naval Air Station Brunswick GWETS
3-2	Volatile Organic Compound Removal Rate & Cumulative GWETS Mass Recovery Since 2008, Naval Air Station Brunswick GWETS
3-3	GWETS Influent (Untreated), 1,4-Dioxane Concentration Trends, 6 January 2009 – 20 January 2010

LIST OF TABLES

Number	Title
2-1	Summary of HiPOx Calibration Data, Groundwater Extraction and Treatment System, Naval Air Station Brunswick, Maine, 14 October 2009
3-1	Summary of HiPOx Prove-Out Data, Groundwater Extraction and Treatment System, Naval Air Station Brunswick, Maine, 20-22 October 2009
3-2	Summary of HiPOx Pilot Study Data, Groundwater Extraction and Treatment System, Naval Air Station Brunswick, Maine, 2 November 2009 to 20 January 2010

ACRONYMS

APT	Applied Process Technologies
BRAC	Base Realignment and Closure
CVOC	chlorinated volatile organic compound
DCA	dichloroethane
EW	extraction well
ft	feet
GAC	granular activated carbon
gal	gallon
GHG	greenhouse gas
gpm	gallons per minute
GWETS	Groundwater Extraction and Treatment System
HDPE	high-density polyethylene
H&S	H&S Environmental
in.	inch
KW	kilowatt
L	liter
lb	pound
µg/L	micrograms per Liter
mL	milliliter
NAS	Naval Air Station
No.	number
O&M	Operation and Maintenance
PCE	tetrachloroethylene
PMO NE	Program Management Office North East
PVC	polyvinyl chloride
SCADA	Supervisory Control and Data Acquisition System
TCA	trichloroethane
TCE	trichloroethylene
U.S.	United States
VOC	volatile organic compound

1. INTRODUCTION

1.1 PROJECT IDENTIFICATION

The Department of the Navy – Base Realignment and Closure Program (BRAC) Management Office Northeast (PMO NE), under Contract No. N40085-09-D-7035, Task Order 002, tasked H&S Environmental (H&S) with installation and pilot testing of a HiPOx™ HCU advanced oxidation system (HiPOx system) from Applied Process Technology, Inc. (APT) of Pleasant Hill, California. Under subcontract to H&S, ECC completed HiPOx system installation and pilot testing during September 2009 - January 2010 and prepared this HiPOx Pilot Study Report.

The purpose of the HiPOx system is to provide treatment of 1,4-dioxane in groundwater recovered from the Eastern Plume by the groundwater extraction and treatment system (GWETS) located in Building 50 at Naval Air Station (NAS) Brunswick, Maine. The HiPOx equipment was installed and incorporated into the GWETS during 24 September 2009 through 14 October 2009. The location of Building 50 at NAS Brunswick is provided on Figure 1-1. The interior layout of Building 50 showing the GWETS and HiPOx treatment components is shown on Figure 1-2.

After an initial system prove-out period during 20 to 22 October 2009, a twelve week HiPOx pilot test was conducted from 02 November 2009 until 20 January 2010. This report provides the results of the HiPOx system pilot test and recommendations for future GWETS operations.

1.2 BACKGROUND INFORMATION

The Eastern Plume consists of contaminated groundwater located at the eastern edge of the NAS Brunswick installation. The principal contaminants of concern in the Eastern Plume include the chlorinated solvents trichloroethane (TCA), perchloroethene and trichloroethene (PCE and TCE, respectively) and associated daughter products. Other non-halogenated volatile organic compounds (VOCs) related to petroleum hydrocarbons are periodically reported at low concentrations within the Eastern Plume.

The GWETS was designed to contain and remove dissolved-phase VOCs from groundwater in the Eastern Plume. The pump and treat system utilizes a network of extraction wells to provide hydraulic control and remove contaminated water and a separate network of monitoring wells to measure system performance. Prior to installation of the HiPOx HCU system, the GWETS utilized a shallow tray air-stripper for removal of VOCs from extracted groundwater with liquid-phase granular activated carbon (GAC) polishing prior to discharge to an on-site infiltration gallery. Air stripper emissions were treated with vapor-phase GAC prior to release to atmosphere. Figure 1-3 provides a schematic view of the GWETS process prior to installation of the HiPOx HCU, including primary treatment by the air-stripper and secondary treatment by liquid-phase and vapor-phase GAC.

Subsequent to the design and installation of the GWETS discussed above, 1,4-dioxane was identified as an emerging contaminant of concern. 1,4-dioxane is a solvent stabilizer historically added to TCA, although 1,4-dioxane has also been identified in PCE and TCE as a result of residual carry over during manufacture and transport of chlorinated solvents.

The previous GWETS was not effective for removal of 1,4-dioxane, because the compound is not readily vaporized during air-stripping or adsorbed by GAC. Historically, the concentration of 1,4-dioxane in the GWETS influent has been less than the corresponding State of Maine Maximum Exposure Guideline (MEG) of 32 µg/L. However, the Navy has recently added three new extraction wells (identified as EW-05B; EW-08; and EW-09) in residual "hot-spot" areas of the Eastern Plume and has installed the HiPOx HCU to insure that 1,4-dioxane is effectively treated during operation of the new extraction wells.

1.2.1 Summary of GWETS Operations

The GWETS was installed by OHM Corporation in 1994 and began operation in May 1995. During late 2000 and early 2001, Foster Wheeler Environmental Corporation replaced the original VOC treatment equipment (ultraviolet oxidation) with the current air stripping and GAC system. The GWETS continued to discharge to the Brunswick Sewer District with the new treatment equipment. During 2001, Foster Wheeler Environmental Corporation designed and installed an infiltration gallery for the GWETS. The infiltration gallery was installed during Fall 2001, and began operation (receiving treated effluent from GWETS) in January 2002. At this time discharge of the treated GWETS effluent to the Brunswick Sewer District ceased. The GWETS still maintains an option to discharge to the Brunswick Sewer District; however, this will only occur on an as-needed basis in consultation with the Brunswick Sewer District.

The original extraction well network, installed in 1995, included seven wells (EW-01 through EW-07). Three extraction wells have been added to the network: EW-02A was added in 1998, EW-05A was added to replace EW-05 in January 2001, and EW-05B was added to replace EW-05A in August 2009. Currently, the network has four operational extraction wells: EW-01, EW-02A, EW-04, and EW-05B. Extraction well EW-03 was deactivated in December 1998 and decommissioned in September 2000 due to collapse of the screened interval. Extraction wells EW-06 and EW-07 were installed at the Sites 1 and 3 Landfill and were deactivated in 1997 due to continued decreasing yields and stabilized water levels within the confines of the slurry wall for Sites 1 and 3 Landfill. New extraction wells EW-08 and EW-09 have recently been installed and are scheduled for activation during March 2010.

The GWETS currently treats the combined influent from Eastern Plume groundwater extraction wells EW-01, EW-02A, EW-04, and EW-05B. The combined influent flow rate in March 2010 was approximately 33.6 gallons per minute (gpm) with a total chlorinated volatile organic compound (CVOC) concentration of approximately 224.4 µg/L.

The combined influent from extraction wells EW-01, EW-02A, EW-04, and EW-05B contains dissolved-phase 1,4-dioxane at concentrations of approximately 25.7-27.9 µg/L (January – March 2010), less than the corresponding MEG of 32 µg/L. However, it is anticipated that the

composite influent 1,4-dioxane concentration will increase after activation of new extraction wells EW-08 and EW-09.

Extraction wells EW-08 and EW-09 are located in residual 'hot-spot' areas for both VOCs and 1,4-dioxane. It is anticipated that dissolved-phase 1,4-dioxane concentrations in groundwater recovered from EW-08 and EW-09 will be equal to or greater than 100 µg/L. Following activation of EW-08 and EW-08 in March 2010, the extraction well network will be optimized to a total combined flow rate of 55 to 65 gpm. The composite influent based on operation of extraction wells EW-01, EW-02A, EW-04, EW-05B, EW-08, and EW-09 is initially expected to contain 1,4-dioxane at concentrations above the respective MEG.

1.2.2 HiPOx System Installation and Pilot Testing

A HiPOx HCU system from APT was installed at Building 50 during September 2009 and October 2009 to provide 1,4-dioxane treatment in order to insure that the concentration of 1,4-dioxane in the GWETS effluent remains below the MEG of 32 µg/L, with a pilot study treatment goal of 10 µg/L. The HiPOx system added to the NAS Brunswick GWETS is a re-furbished unit with an operating capacity ranging from 3 to 70 gpm, as shown on the equipment specification sheets provided in Appendix A. If necessary, the HiPOx system can be modified to increase the operating capacity to 160 gpm.

APT's HiPOx technology is a continuous flow advanced oxidation process for the destruction of dissolved-phase volatile and semi-volatile organic compounds. The process uses industry recognized ozone and hydrogen peroxide chemistry in a uniquely designed oxidation reactor. The reactants are injected directly into the water stream in precisely controlled ratios and locations, generating hydroxyl radicals, one of nature's most powerful oxidants. The hydroxyl radicals attack the bonds in the organic contaminant molecules, progressively oxidizing these compounds and any resulting intermediate by-products until the basic atoms ultimately recombine into benign end-products of carbon dioxide (CO_2), water (H_2O), and salts.

Although HiPOx systems provide highly efficient treatment of 1,4-dioxane and chlorinated ethenes, the process is not as effective for removal of chlorinated ethanes (i.e., TCA and related daughter products). Chlorinated ethanes and residual chlorinated ethenes continued to be treated via the existing air-stripper and GAC units, except during a one-week evaluation period conducted from 16 to 20 November 2009 when the HiPOx HCU effluent was directed to the liquid-phase GAC units without air-stripping.

The HiPOx unit was installed at the head of the existing GWETS, after the sand filters to allow particulate removal prior to advanced oxidation as shown on Figure 1-4. The HiPOx unit removes 1,4-dioxane and chlorinated ethenes and provides limited treatment of chlorinated ethanes. Treated groundwater from the HiPOx unit is pumped to the existing air-stripper and vapor-phase GAC units for removal of residual chlorinated ethanes and subsequently through the existing liquid-phase GAC units for polishing of residual CVOCs, if present.

A one-week evaluation of the efficacy of utilizing the HiPOx system and liquid-phase GAC without the air-stripper and vapor-phase treatment processes was conducted during the pilot test. The purpose of this alternate treatment train evaluation is discussed below.

1.2.3 Evaluation & Optimization of HiPOx System with Liquid-Phase GAC

Although the primary goal of the HiPOx pilot study was to confirm the site-specific effectiveness of the HiPOx process and determine operational requirements for the HiPOx system, it also provided an excellent opportunity to evaluate other potential changes to the GWETS and recommend significant improvements as well. As part of Navy policy, there is a requirement to regularly examine existing remedial cleanup systems in an effort to optimize their operation and ensure enhanced system performance as needed to protect human health and the environment. In addition, there are numerous Federal mandates (Department of Defense, "Consideration of Green and Sustainable Remediation Practices in the Defense Environmental Restoration Program, 10 August 2009) to minimize energy consumption and the "environmental footprint" at Federal Facilities as part of sustainability and "green" initiatives. In addition, recent executive orders have been issued to address greenhouse gas emissions and EPA's Smart Energy Resources Guide (EPA/600/R-08/049, March 2008) specifically recognizes that remediation systems are sources of greenhouse gas (GHG) emissions and the need to reduce GHC emissions resulting from remedial actions.

The existing GWETS provides final removal of residual VOCs by adsorption to GAC. The majority of the VOCs are stripped from groundwater and captured in the vapor-phase GAC vessels. Residual VOCs that are not removed by air-stripping (typically less than 1-2 percent of the influent VOC concentration) are captured by the liquid-phase GAC. The air-stripper and GAC treatment process was designed and installed during 2000-2001, at a time when the monthly VOC loading was more than ten times greater than current conditions. With the HiPOx system operational, the VOC loading to the air-stripper and GAC vessels has been further reduced, because the HiPOx process removes nearly all of the chlorinated ethenes and more than 15 % to 20% of the chlorinated ethanes before the air-stripper.

During 16 to 20 November 2009, a one-week evaluation of an alternative GWETS treatment train was conducted, temporarily replacing the air-stripping and vapor-phase GAC treatment processes in favor of VOC and 1,4-dioxane removal by the HiPOx system with final VOC polishing by liquid-phase GAC. Figure 1-5 provides a schematic view of the GWETS process utilizing the HiPOx system for primary treatment and the liquid-phase GAC units as a contingent measure and for secondary polishing of residual chlorinated ethanes. Process water continued to pass through the inactive air-stripper without loss of VOCs.

The potential advantages gained by a permanent GWETS treatment modification to utilize the HiPOx system with liquid-phase GAC in favor of the air-stripper and vapor-phase GAC include:

1. Simplification of existing treatment process by consolidation of GAC adsorption to a single media type (liquid-phase GAC). This would result in elimination of vapor-phase

GAC replacements; elimination of vapor-phase air sampling; and significant reduction of electrical demand.

2. Reduction of GWETS electrical demand and associated off-site environmental impacts by deactivation of the 10 horse power (Hp) air-stripper blower, 10-Hp air-stream heater booster blower, and 24 kilowatt (KW) air-stream heater required prior to the vapor-phase GAC vessels. Together these electrical loads are a very large component (i.e., approximately 50 percent) of the GWETS electrical demand. Eliminating these loads would save energy and reduce the potential off-site environmental issues associated with increased production of air pollutants and greenhouse gases incurred during electrical power generation.

1.3 GOAL & OBJECTIVES

The goals and objectives of the HiPOx Pilot Test included:

1. Demonstrate that the HiPOx advanced oxidation system provides effective 1,4-dioxane treatment to maintain GWETS effluent concentrations equal to or less than 10 µg/L;

2. Determine the optimal operating conditions to meet the 1,4-dioxane treatment objective with the most efficient use of hydrogen peroxide and electrical power necessary to run the HiPOx system;

3. Evaluate the most cost-effective and energy efficient GWETS configuration with the HiPOx system in place. Possible alternatives included utilizing the existing air-stripper and GAC units to treat residual CVOCs in the HiPOx effluent or discharging the HiPOx effluent directly through the liquid-phase GAC vessels prior to the infiltration gallery; and,

4. Provide HiPOx training to the GWETS operator and support personnel.

1.4 ORGANIZATION

This HiPOx Pilot Test Report provides details on the installation and commissioning of the HiPOx HCU system and results from the initial one-week prove-out period and subsequent 12-week HiPOx pilot test. This report includes a one-week evaluation of an alternate GWETS treatment train consisting of the HiPOx unit and liquid-phase GAC without concurrent operation of the shallow tray air-stripper and vapor-phase GAC. The Pilot Test Report is organized into the following sections:

- **Chapter 1, Introduction**—Provides background information of the GWETS and HiPOx HCU and outlines the goals and objectives of the HiPOx Pilot Test.

- **Chapter 2, HiPOx HCU Installation & Commissioning**—Details the installation and commissioning of the HiPOx HCU system, including new groundwater process piping, hydrogen peroxide and oxygen delivery equipment, and interconnection with the existing GWETS electrical and control systems.

- **Chapter 3, HiPOx Pilot Study**—Provides the results of the one-week HiPOx prove-out period; 12-week HiPOx pilot test; and one-week alternative treatment train evaluation.

- **Chapter 4, Recommendations**—Provides recommendations for continued GWETS and HiPOx operations to insure effective treatment of CVOCs and 1,4-dioxane while minimizing resource consumption and electrical demand.

2. HiPOx PILOT SYSTEM INSTALLATION & COMMISSIONING

2.1 OVERVIEW

Under subcontract to H&S, APT provided a re-furbished HiPOx HCU unit and a separate oxygen generator skid. The HiPOx HCU design drawings are provided in Appendix A. The equipment was delivered to Building 50 at NAS Brunswick on 24 September 2009 and incorporated into the existing GWETS during September 2009 and October 2009. HiPOx system activation, calibration, and commissioning procedures were conducted during 14 to 19 October 2009, prior to the HiPOx prove-out period during 20 to 22 October 2009.

Under a separate subcontract to H&S, ECC provided construction oversight during installation of the HiPOx HCU equipment, including supervision of the concrete, rigging, and electrical subcontractors. ECC self-performed the mechanical work, including installation of groundwater process piping and oxidant delivery system plumbing connections. An APT HiPOx supervisor and process technician assisted with final connection work and commissioning of the HiPOx system after installation.

The layout of the HiPOx system is shown on Figure 1-2. New 3-inch ball valves were installed in the existing groundwater influent line between the sand filters and the shallow-tray air-stripper. A new 3-inch Schedule 80 PVC pipe was run from the valve interconnection to the HiPOx HCU skid. The new 3-inch ball valves allow the GWETS operator to direct groundwater from the sand filter effluent to either the air-stripper or the HiPOx system. A separate 3-inch Schedule 80 PVC pipe was run from the HiPOx HCU skid to the air-stripper, shown schematically on Figure 1-4. With the influent valves set to direct filtered groundwater to the HiPOx system, residual VOCs in the HiPOx effluent can either be treated by air-stripping and both vapor-phase and liquid-phase GAC (i.e., existing GWETS treatment process) or simply by liquid-phase GAC if the operator deactivates the air-stripper blower and air stream heater components.

2.2 EQUIPMENT DELIVERY AND PLACEMENT OF SKIDS

On 24 September 2009, a licensed equipment rigger (Quality Crane Service, Inc. of Portland, Maine), under subcontract to and supervision by ECC, received, unloaded, and placed the equipment skids on new concrete housekeeping pads within Building 50. The concrete pads were constructed by Wallace & Sons, LLC of Brunswick, Maine under subcontract to ECC at the locations shown on Figure 1-2. The concrete pads are necessary to provide level, stable tie-down surfaces for the HiPOx HCU equipment skid (4.5 feet x 8 feet); the oxygen generator equipment skid (4 feet x 4 feet); and the 10% hydrogen peroxide supply tank (34-inch diameter single wall high-density polyethylene (HDPE) tank). The concrete pads were sized to allow 6-inch lateral clearance along the base of the equipment skids and around the hydrogen peroxide tank. The skids were located so that at least 36-inches of clearance is provided for maintenance at the

critical areas shown on APT's design drawings (Appendix A). The housekeeping pads are 3,500-psi, steel re-enforced concrete and were allowed to cure prior to placement of equipment skids.

2.3 MECHANICAL & ELECTRICAL WORK

Mechanical work was self-performed by ECC. Electrical work was completed by E.S. Boulos Company of Westbrook, Maine under subcontract to ECC. ECC provided construction oversight during electrical work. Plumbing and electrical work was completed during 25 September through 13 October 2009 after the equipment skids were secured to the concrete pads. Pipe and conduit was run overhead and along the plant walls at the approximate locations shown on Figure 1-2 (mechanical installation drawing) and Figure 2-1 (electrical installation drawing) to minimize interference with existing GWETS operations.

2.3.1 Mechanical Work

The new Schedule 80 PVC groundwater process piping and valves were installed as discussed in Section 2.1. Existing Oxidation Tank (GWETS Tank No. 1) was cleaned and utilized as a stabilization tank for the HiPOx system. To minimize fugitive VOC emissions and to allow for vacuum recovery of residual ozone, a ½-inch polypropylene cover was fabricated for Tank No. 1. A similar cover was fabricated for the existing GWETS equalization tank (EQ Tank No. 7). The round polypropylene tank covers were fitted and bolted through the existing fiberglass tank flanges and include hinged access panels to allow inspection and cleaning of the tanks.

With the HiPOx system active, groundwater is directed from the sand filters to Tank 1 which allows controlled and stabilized flow through the HiPOx system. A transfer pump on the HiPOx HCU skid draws water from Tank 1, and returns treated water to Tank 1 when the HiPOx system is in recycle mode (i.e., during start-up and calibration or during periods when the GWETS flow rate is not sufficient to maintain steady flow conditions at the HiPOx skid). The 3-inch Schedule 80 PVC influent pipe is connected to Tank 1. Separate 3-inch Schedule 80 PVC pipe runs connect Tank 1 to the HiPOx skid and the HiPOx skid to the air-stripper. A 1-inch ozone recovery vacuum line and a ½-inch condensate return line (both Schedule 80 PVC) were installed from the top of Tank 1 to the HiPOx skid. The ozone recovery line maintains a slight vacuum within Tank 1 to recover residual ozone for oxidation through the two ozone destruct modules located at the top of the HiPOx skid. A float-activated pump on the HiPOx skid returns collected condensate from the oxidation process to Tank 1. Complete piping details will be provided under separate cover with the as-built drawing set in the updated GWETS Operations & Maintenance Manual.

A new 150-gal HDPE single-wall mixing tank was installed adjacent to the existing 2,000-gal 45% hydrogen peroxide tank. One of the existing hydrogen peroxide metering pumps (LMI Model A751-1985) was re-purposed to transfer 45% hydrogen peroxide to the new 10% hydrogen peroxide mixing tank. Distilled water is transferred to the mixing tank by manual drum pumping. The other existing metering pump (LMI Model B711-1915) was modified to deliver 10% hydrogen peroxide from the mixing tank to the 20-gal day tank at the HiPOx HCU

skid through a new ½-inch, Schedule 80 PVC pipe that was run overhead and along the plant wall from the 10% hydrogen peroxide mixing tank to the HiPOx skid, as shown on Figure 1-2. Stainless steel tubing was installed to deliver oxygen from the oxygen generator skid to the HiPOx HCU skid.

Following final plumbing connections, all new pipe and fittings were tested to insure that there were no leaks.

2.3.2 Electrical Work

Similar to the mechanical work, electrical work included running new overhead power and control conduit from tie-in locations in the GWETS electrical room to the HiPOx HCU skid. Three-phase, 208-230V power was provided to the HiPOx HCU skid after installation of a step-down transformer in the GWETS electrical control room. The three-phase step-down transformer (Cutler-Hammer 30 KVA - 408V/208V) was necessary in order to provide three-phase power at 208V to the HiPOx unit. Although labeled as 208V/3-Phase on the Building 50 electrical panels, the actual power was found to be 208V/single-phase.

Control and communication wiring was run from the HiPOx HCU skid to the control room in Building 50 for tie-in with the GWETS control system. APT provided interconnect electrical fittings for single-phase power and control connections between the HiPOx and oxygen generator skids. Conduit and wire was run between the skids during final electrical work. Electrical line drawings and load calculations for the HiPOx unit are provided with the APT design drawings (Appendix A). The electrical conduit runs are shown on Figure 2-1. As-built electrical drawings will be provided under separate cover with the updated GWETS Operations & Maintenance Manual.

2.4 COMMISSIONING

During 14 to 16 October 2009, after completion and inspection of final mechanical and electrical work, the HiPOx system as activated and commissioned by a representative from APT under H&S and ECC oversight. The commissioning process was necessary to confirm that the equipment had been properly installed and was ready for activation. APT's commissioning checklist is provided in Appendix A.

On 14 October 2009, two sets of aqueous test samples (morning and afternoon) were collected to calibrate the HiPOx unit and confirm that the correct oxidant dosing rate had been established to provide VOC and 1,4-dioxane treatment. The samples included raw groundwater at the GWETS influent (after sand filtration); treated groundwater at the HiPOx effluent; and effluent from the GWETS prior to discharge to the Brunswick Sewer District. The calibration samples were submitted to Analytics Environmental Laboratory, LLC (Analytics Laboratory) of Portsmouth, New Hampshire for VOC analysis by EPA Method 8260B and for 1,4-dioxane analysis by EPA Method 8260B/SIM. The results are summarized in Table 2-1. The complete analytical data package is provided in Appendix B.

As shown on Table 2-1, the HiPOx calibration test samples confirmed that the HiPOx unit was removing 100% of influent 1,4-dioxane, and greater than 50% of CVOCs. The slight 1,4-dioxane concentrations reported in the GWETS effluent samples resulted from residual 1,4-dioxane flushing out of the liquid-phase GAC vessels after activation of the HiPOx system.

The HiPOx system was deactivated from 15 to 19 October to allow for final equipment calibration and installation and to avoid initial operation over the weekend. The system was re-started on 19 October 2009, with completion of a prove-out testing during 20 to 22 October 2009. During the week of 26 to 30 October 2009, the HiPOx system was operated intermittently due to start-up operations and maintenance issues, including repair of a minor ozone leak and replacement of a failed oxidant transfer pump. The 12-week HiPOx pilot test was initiated on 02 November 2009.

A set of photographs documenting the HiPOx installation is included in Appendix C.

3. HiPOx PILOT TESTING

3.1 OVERVIEW

The NAS Brunswick HiPOx system was pilot tested over a twelve week period during 02 November 2009 through 20 January 2010. The primary purpose of the pilot test was to confirm that the HiPOx system successfully reduces influent 1,4-dioxane concentrations to the treatment goal of less than 10 µg/L prior to discharge to the infiltration gallery. Secondary objectives of the pilot test included the following:

- Develop a set of HiPOx operating conditions that achieves the 1,4-dioxane treatment goal with the most efficient utilization of energy and consumables (i.e., optimize ozone and hydrogen peroxide dosing rates);
- Evaluate the most efficient overall GWETS configuration for treatment of residual CVOCs in the HiPOx effluent. System configurations that were pilot tested included utilizing the air-stripper with both liquid and vapor-phase GAC and utilizing liquid-phase GAC as a stand-alone polishing step after the HiPOx;
- Provide HiPOx training to the GWETS operator and support personnel.

Upon activation of new extraction well EW-05B on 24 September 2009 until after the end of the HiPOx prove-out period (23 October 2009), the plant effluent was discharged to the Brunswick Sewer District.

3.2 HiPOx SYSTEM PROVE-OUT

During the week of 19 to 23 October 2009, following installation and commissioning, the HiPOx system underwent a prove-out period to confirm the effectiveness of the new equipment for 1,4-dioxane treatment prior to re-directing the GWETS effluent to the on-site infiltration gallery and beginning the HiPOx pilot test. During 20-22 October 2009, ECC collected influent groundwater samples before the HiPOx system; between the HiPOx HCU and air-stripper (i.e., treated HiPOx effluent); and at the GWETS effluent prior to discharge to the Brunswick Sewer District.

Two sets of groundwater samples were collected on each day, one in the morning and a second set in the afternoon. The groundwater samples were collected from pressure-side sampling ports through Teflon™ tubing into 40-mL VOA vials with minimal disturbance and zero headspace to prevent potential vaporization of target analytes. The groundwater samples were submitted to Analytics Laboratory and analyzed for VOCs by EPA Method 8260B and 1,4-dioxane by EPA Method 8260B/SIM. A summary of the analytical results for samples collected during the prove-out period is provided in Table 3-1. The analytical data package Form I's are provided in Appendix B.

As shown on Table 3-1, the HiPOx unit consistently removed 100% of the influent 1,4-dioxane during the prove-out period. The composite influent 1,4-dioxane concentrations varied between 9.4 µg/L and 26 µg/L during 20 to 22 October 2009. 1,4-dioxane was not detected in any of the six concurrent HiPOx effluent samples during this period.

With the exception of trichloroethane and 1,1-dichloroethane, the HiPOx unit removed 100% of influent VOCs. As discussed in Chapter 1, this finding was expected because the HiPOx process is not as effective for removal of chlorinated ethanes relative to chlorinated ethenes and other VOCs. During the prove-out period, the chlorinated ethane removal rate achieved by the HiPOx process varied from 5% to 16%, somewhat less than the chlorinated ethane treatment effectiveness observed during the earlier calibration test on 14 October 2009. This observation is discussed further in the following section.

Other than slight residual 1,4-dioxane concentrations periodically reported less than 1.0 µg/L in the GWETS effluent (believed to have been associated with continued flushing of the liquid-phase GAC vessels), the combined treatment processes of HiPOx oxidation followed by air-stripping and carbon adsorption resulted in complete removal of VOCs and 1,4-dioxane from the influent groundwater. Therefore the prove-out testing successfully demonstrated the efficacy of the HiPOx process for destructively reducing effluent 1,4-dioxane below 10 µg/L. The results of the HiPOx prove-out were discussed with EPA and MEDEP during a teleconference on 02 November 2009, during which regulatory approval was obtained for initiation of the twelve week HiPOx pilot test and re-direction of the GWETS effluent to the on-site infiltration gallery from the Brunswick Sewer District.

3.3 TWELVE WEEK PILOT TEST

Following the HiPOx prove-out period during 19 to 23 October 2009 and subsequent equipment repairs during the last week of October, a twelve week pilot test was conducted from 02 November 2009 until 20 January 2010 to assess the performance of the HiPOx system and evaluate alternative treatment processes for residual CVOCs in the HiPOx effluent. During each of the twelve weeks, ECC concurrently collected one composite influent sample, one HiPOx effluent sample, and one GWETS or 'Plant' effluent sample. All samples were submitted to Analytics Laboratory and analyzed for VOCs by EPA Method 8260B and for 1,4-dioxane by EPA Method 8260B/SIM. The results of the twelve week HiPOx pilot testing samples are summarized on Table 3-2. The analytical data package Form I's are provided in Appendix B.

As discussed above, a slight reduction in the chlorinated ethane removal rate was observed between the HiPOx calibration samples (14 October 2009) and the subsequent prove-out testing samples (20 to 22 October 2009). After consultation with APT, the oxidant dosing rate was increased on 04 November 2009 in an effort to restore the chlorinated ethane treatment effectiveness. The increased oxidant dosing parameters were established with the ozone feed to the HiPOx at 9.0 ppm and hydrogen peroxide feed at 4.4 ppm, with a residual hydrogen peroxide target concentration of 0.4 ppm in the HiPOx effluent. The residual hydrogen peroxide in the

HiPOx effluent is measured using Hach™ test strips to insure that the target oxidant dose has been achieved.

After increasing the oxidant dosing parameters on 04 November 2009, the chlorinated ethane treatment effectiveness increased to approximately 20% to 25%, consistent with site-specific bench testing results for groundwater extracted from the Eastern Plume and the initial HiPOx performance observed during calibration testing on 14 October 2009. However, as shown on Table 3-2, significant variation in chlorinated ethane treatment effectiveness was observed during late November 2009 through early January 2010 throughout the duration of the pilot test.

During the first five weeks of the pilot test, 1,4-dioxane and all non-ethane VOCs were completely removed from the influent groundwater by the HiPOx system. During this period the only analytes reported in the HiPOx effluent were TCA and 1,1-DCA (dichloroethane). The average HiPOx treatment effectiveness for influent chlorinated ethanes during the first four weeks of the pilot test in November 2009 was 16.8%. However, on 02 December 2009 the HiPOx chlorinated ethane removal rate decreased to zero. Although non-ethane VOCs and 1,4-dioxane continued to be eliminated from the influent groundwater on 02 December 2009, the sharp decrease in chlorinated ethane removal seems to have indicated a change in the HiPOx oxidation effectiveness, based on subsequent samples collected from the HiPOx effluent during the remainder of December 2009 and early January 2010 in which residual 1,4-dioxane and slight concentrations of acetone and/or chloroform were periodically observed in the HiPOx effluent.

On 22 December 2009, the GWETS was automatically shutdown due to a 'Low-Low' hydrogen peroxide alarm on the HiPOx. The operator was called to the plant and re-started the GWETS at 0545 hours on 22 December 2009, although a subsequent automated shutdown occurred again on 25 December 2009 due to insufficient hydrogen peroxide feed to the HiPOx oxidation reactor. During response to the alarm call on 25 December 2009, gas bubbles were observed in the 20-gal HiPOx day tank recirculation line. The operator bled the recirculation line and re-started the GWETS at 1330 hours. A third automated shutdown event occurred on 04 January 2010, the cause of which was identified as a leaking valve feeding the HiPOx day tank recirculation line. The operator responded to this call and temporarily capped the recirculation line to prevent further dilution of the hydrogen peroxide day tank and associated 'Low-Low' hydrogen peroxide alarms. The leaking valve was replaced on 08 January 2010 prior to the last two HiPOx pilot test sampling events (13 and 20 January 2010). Replacement of the leaking recirculation valve stopped the automated shutdowns resulting from dilution of the hydrogen peroxide day tank and appears to have corrected the variation observed in the HiPOx treatment effectiveness.

Notwithstanding the variability observed in chlorinated ethane and 1,4-dioxane removal by the HiPOx system (believed to have been associated with the leaking hydrogen peroxide recirculation valve), the twelve week pilot test successfully demonstrated the efficacy of the HiPOx system for meeting the 1,4-dioxane treatment goals. The major findings of the twelve week HiPOx pilot test are outlined below:

- Influent 1,4-dioxane was consistently reduced below 10 μg/L;

- Influent 1,4-dioxane was 100% eliminated by the HiPOx system in 13 of 16 pilot test samples and with the other three HiPOx samples treated, below the design goal of 10 µg/L;
- There were no chlorinated ethenes detected in any HiPOx effluent samples; and,
- The GWETS effluent criteria were consistently achieved throughout the pilot test.

3.3.1 Alternate GWETS Treatment Train Evaluation

During the third week of the HiPOx pilot test (16 to 20 November 2009), ECC evaluated the efficacy of using the liquid-phase GAC units as a stand-alone polishing process for treating residual CVOCs in the HiPOx effluent. The air-stripper and air-stream heater system for the vapor-phase GAC were deactivated, allowing the treated HiPOx effluent to continue flowing through the air-stripper without an induced cross-current air flow. Therefore, there were no air-stripper emissions requiring treatment by the vapor-phase GAC. The bag filter transfer pumps continued to direct water from the air-stripper to the liquid-phase GAC where final polishing of residual CVOCs occurred. The alternate GWETS treatment train is shown schematically in Figure 1-5.

The results of the one-week alternate treatment train evaluation are summarized on the first three pages of Table 3-2 under the section headings identified as 'HiPOx with Liquid-Phase GAC'. Prior to the one-week evaluation period, residual 1,4-dioxane had been successfully flushed out of the liquid-phase GAC vessels such that there were no analytes (i.e., either VOCs or 1,4-dioxane) reported in the plant effluent samples following HiPOx treatment, air-stripping, and liquid-phase GAC adsorption. The overall treatment effectiveness of the GWETS using HiPOx followed by air-stripping and GAC was 100%.

The results of the 5-day alternate treatment train evaluation are summarized below:

- On the first day of the evaluation period (16 November 2009), residual TCA was reported at 1.3 µg/L in the plant effluent and duplicate plant effluent samples. The corresponding untreated influent TCA concentration was 80 µg/L, with 66 µg/L reported after HiPOx treatment. There were no analytes reported above the GWETS effluent criteria. The overall treatment effectiveness using the HiPOx and liquid-phase GAC was 99.3%.

- On the second day of the evaluation period (17 November 2009), residual TCA was reported at 9.3 µg/L in the plant effluent sample and 9.5 µg/L in the duplicate plant effluent sample. Residual 1,1-DCA was reported at 0.7 J µg/L in the plant effluent and duplicate plant effluent samples. There were no analytes reported above the GWETS effluent criteria. The overall treatment effectiveness using the HiPOx and liquid-phase GAC was 94.3%.

- On the third day of the evaluation period (18 November 2009), residual TCA and 1,1-DCA were reported at 13 µg/L and 1.1 µg/L, respectively in the plant effluent and duplicate plant effluent samples. There were no analytes reported above the GWETS

effluent criteria. The overall treatment effectiveness using the HiPOx and liquid-phase GAC was 89.2%.

- On the fourth day of the evaluation period (19 November 2009), residual TCA and 1,1-DCA were reported at 20 µg/L and 1.8 µg/L, respectively in the plant effluent and duplicate plant effluent samples. There were no analytes reported above the GWETS effluent criteria. The overall treatment effectiveness using the HiPOx and liquid-phase GAC was 85.0%.

- On the last day of the evaluation period (20 November 2009), residual TCA and 1,1-DCA were reported between 24 µg/L to 25 µg/L and 2.1 µg/L to 2.2 µg/L, respectively in the plant effluent and duplicate plant effluent samples. There were no analytes reported above the GWETS effluent criteria. The overall treatment effectiveness using the HiPOx and liquid-phase GAC was 87.7%.

The one-week evaluation of operating the GWETS with the HiPOx unit and liquid-phase GAC (i.e., without air-stripping and vapor-phase GAC) demonstrated that the effluent criteria can be achieved using this treatment train. In fact, the effluent criteria were consistently achieved by the HiPOx prior to secondary treatment throughout the entire pilot test period, including the calibration and prove-out samples and subsequent twelve-week pilot test. **There have never been any analytes reported in the HiPOx effluent at concentrations above the Federal MCL or Maine MEG.**

During the one-week evaluation period, the only analytes reported in the HiPOx effluent were the chlorinated ethanes TCA and 1,1-DCA. None of the chlorinated ethane concentrations exceeded the GWETS effluent criteria at any point in the treatment process, including the composite influent (untreated) groundwater.

The reduction of TCA and 1,1-DCA concentrations by the HiPOx process varied from 5.1 to 25.8% during the 5-day evaluation period. The variation may have been related to the leaking hydrogen peroxide recirculation valve, which is believed to have diluted the 10% hydrogen peroxide solution in the HiPOx day tank. After replacement of this valve in January 2010 and with adequate oxidant dosing, it should be possible to maintain chlorinated ethane treatment effectiveness in the range of 20-25% through the HiPOx unit. Although not necessary to meet the GWETS effluent criteria, maintaining consistent oxidation of chlorinated ethanes during the HiPOx process would reduce the loading rate on the liquid-phase GAC if the GWETS is operated without the air-stripper and vapor-phase GAC.

TCA and 1,1-DCA were the only analytes detected in the GWETS effluent after the liquid-phase GAC vessels. During the 5-day evaluation period with the air-stripper deactivated, the concentrations of TCA and 1,1-DCA reported in the GWETS effluent gradually increased, with the liquid-phase GAC removing approximately 64% of TCA and 69% of DCA from the HiPOx effluent stream by the last day of the evaluation period. Residual 1,1-DCA concentrations were flushed out of the liquid-phase GAC vessels within approximately 10 days following reactivation of the air-stripper. Residual TCA concentrations in the GWETS effluent decreased to less than

1.0 µg/L by early January 2010. It should be noted that neither the Federal MCL or the Maine MEG were exceeded for either compound in the GWETS influent or effluent throughout the entire pilot test period.

The Freundlich adsorption isotherm constants for 1,1,1-TCA and 1,1-DCA by liquid-phase GAC are 2.5 and 1.8 $(mg/g)(L/mg)^{1/n}$, respectively (Dobbs and Cohen, 1980). The corresponding adsorption isotherm constants for TCE and 1,1-DCE (the only Eastern Plume contaminants that exceed the Federal MCL and/or Maine MEG in the untreated GWETS influent) are 28 and 4.9 $(mg/g)(L/mg)^{1/n}$ – approximately 10X and 2X more likely to be adsorbed than TCA or 1,1-DCA. Therefore, as a contingent measure following HiPOx treatment, the liquid-phase GAC units would be much more effective for removal of TCE and 1,1-DCE relative to the chlorinated ethanes. As discussed previously and as shown in Tables 3-1 and 3-2, TCE and 1,1-DCE are the only contaminants that exceed the GWETS effluent criteria in the untreated groundwater extracted from the Eastern Plume. The HiPOx system has consistently removed 100% of inflowing chlorinated ethenes, even during periods when oxidation effectiveness for other dissolved-phase contaminants was diminished due to dilution of the hydrogen peroxide feed tank. Therefore, the HiPOx pilot test successfully demonstrates that utilization of the HiPOx system with liquid-phase GAC polishing will meet the GWETS effluent criteria.

3.3.2 Evaluation of GWETS Electrical Demand

In accordance with the 'Consideration of Green & Sustainable Remediation Practices' policy issued by the Under Secretary of Defense on 10 August 2009, the Navy conducted an electrical metering study to quantify the power consumed by the GWETS when operated with the air-stripper and liquid-phase GAC units relative to the alternative treatment train discussed above (i.e., HiPOx and liquid-phase GAC only).

The electrical metering study was conducted from 18 to 24 November 2009 by E.S. Boulos Company of Lewiston, Maine under subcontract to ECC. During the first three days of the electrical metering study the GWETS was operated using only the HiPOx and liquid-phase GAC treatment processes. During the remainder of the electrical metering study (21 to 24 November 2009), the GWETS was operated with air-stripping and vapor-phase GAC, including the 10-Hp air-stripper blower; 10-Hp booster blower; and 24-KW in-line air-stream heater. The study used a dedicated power meter to record the total kilowatt hours (KWH) consumed by the GWETS during 18 to 24 November 2009. The complete report is included in Appendix D. The GWETS electrical demand results are summarized below:

- **Electrical Demand using HiPOx and liquid-phase GAC: 17,985 KWH/month**
- **Electrical Demand using HiPOx; Air-Stripper; and GAC: 33,926 KWH/month.**

The increased electrical load incurred for operation of the air-stripper and vapor-phase GAC equipment is approximately 15,940 KWH/month, equivalent to the power demand from approximately 30 households in Maine. Although not quantified in this report, generating the electrical power for operation of the air-stripper and vapor-phase GAC equipment produces

significant off-site environmental impacts (i.e., air pollution including sulfur and nitrogen oxides, mercury, particulate matter and significant greenhouse gas emissions). Given that the GWETS discharge requirements can be satisfied without the air-stripper and vapor-phase GAC (i.e., using the HiPOx and liquid-phase GAC treatment train), unnecessary operation of the energy intensive vapor-phase treatment processes is not warranted.

3.4 SUMMARY OF GWETS PERFORMANCE SINCE ACTIVATION OF EW-05B

Extraction well EW-05B was activated on 24 September 2009. As shown on Figure 3-1, the GWETS performance with respect to overall VOC removal had become asymptotic after 2005-2006, with the VOC removal rate having decreased to approximately 0.3 kg/month by late 2008. Upon activation of EW-05B (operated at approximately 16 gpm), the VOC removal rate rapidly increased, reaching a maximum of 3.45 kg/month by 01 October 2009.

The GWETS monthly VOC mass removal and cumulative VOC removal for the period between January 2008 and January 2010 are shown on Figure 3-2. As shown on Figure 3-2, after a brief period of increased performance, further removal of dissolved-phase VOC near EW-05B became diffusion-limited, and the overall GWETS VOC recovery rate returned to asymptotic conditions, continuing the overall downward trend with respect to VOC removal. As of January 2010, the VOC recovery rate has decreased to approximately 0.5 kg/month.

As shown on Figure 3-3, a similar recovery trend was observed with respect to 1,4-dioxane. Prior to activation of new extraction well EW-05B, the composite 1,4-dioxane concentration measured at the GWETS influent was approximately 5 μg/L to 6 μg/L (below the MEG of 32 μg/L). Upon activation of EW-05B, groundwater from which initially contained over 100 μg/L of 1,4-dioxane, the 1,4-dioxane concentration in the GWETS influent briefly spiked to 32.4 μg/L on 01 October 2009. The composite 1,4-dioxane concentration in the extracted groundwater has since decreased exponentially, and as of 20 January 2010 has returned to baseline conditions (i.e., approximately 5 μg/L to 6 μg/L).

It is anticipated that similar VOC and 1,4-dioxane recovery trends will be observed following activation of new extraction wells EW-08 and EW-09, scheduled for March 2010.

4. RECOMMENDATIONS

This chapter provides recommendations for further consideration by the Navy and project stakeholder team based on the results of the twelve week HiPOx pilot test (02 November 2009 through 20 January 2010) and overall GWETS performance since activation of new extraction well EW-05B on 24 September 2009.

4.1 HiPOx SYSTEM

The HiPOx pilot test demonstrated the efficacy of using the HiPOx HCU system for treating dissolved-phase 1,4-dioxane in groundwater extracted from the Eastern Plume. The pilot test treatment goal was to maintain 1,4-dioxane concentrations less than 10 µg/L in the GWETS effluent. This treatment goal was consistently met throughout the entire HiPOx pilot test. In fact, except during a brief period when a leaking valve inadvertently diluted the hydrogen peroxide feed tank, the HiPOx system reduced 1,4-dioxane concentrations to non-detect.

The HiPOx system was also shown to be very effective as a treatment technology for non-chloroethane VOCs including TCE and 1,1-DCE (the only analytes in the GWETS influent that exceeded the Federal MCLs or Maine MEGs during the pilot test). During the entire pilot test, there were no analytes detected above the Federal MCL or Maine MEG in the treated HiPOx effluent.

Recommendations:

- An Explanation of Significant Differences (ESD) should written to document the addition of the HiPOx HCU to the GWETS for treatment of 1,4-dioxane.

- To insure consistent HiPOx treatment effectiveness for non-chlrorethane VOCs and to provide maximum reduction of chlorinated ethanes, it is recommended that HiPOx effluent samples be collected monthly instead of quarterly. The HiPOx effluent samples should only be analyzed for VOCs by EPA Method 8260B because 1,4-dioxane analysis is already included in the monthly GWETS discharge samples. In addition, it is recommended that the GWETS operator be required to measure and record the residual hydrogen peroxide in the HiPOx effluent on a weekly basis to insure that the correct oxidant dose (i.e., hydrogen peroxide and ozone feed) is maintained.

4.2 GWETS OPERATIONS

As discussed in Chapter 3, activation of new extraction well EW-05B in September 2009 resulted in a short-term increase in the VOC and 1,4-dioxane removal rates. However, as of January 2010 the GWETS performance (with respect to contaminant mass removal from the Eastern Plume) had returned to asymptotic conditions, with VOC removal reduced to approximately 0.5 kg/month and the composite influent 1,4-dioxane concentration reduced to

approximately 5 µg/L to 6 µg/L (below the Maine MEG of 32 µg/L). It is anticipated that similar contaminant mass recovery trends will be observed following activation of new extraction wells EW-08 and EW-09 in March 2010.

During the one-week alternative treatment train evaluation period with the air-stripper and vapor-phase GAC system deactivated, it was demonstrated that the HiPOx system and liquid-phase GAC vessels can be used to meet the overall GWETS discharge criteria. Using this alternative treatment train, residual chlorinated ethanes (including TCA and 1,1-DCA) are likely to be present in the GWETS effluent, although at concentrations well below the Federal MCLs or Maine MEGs. An electrical meeting study conducted during and after the one-week evaluation period found that operation of the air-stripper and vapor-phase GAC equipment requires approximately 16,000 KWH/month, nearly 50% of the overall GWETS electrical demand.

Recommendations:

- Decommission former extraction well EW-05A.
- New extraction wells EW-08 and EW-09 should be activated as soon as possible, although activation of the new wells should be staggered by at least two weeks to minimize contaminant loading and/or hydraulic loading disturbances at the GWETS. It may be necessary to adjust flow rates from individual extraction wells to maintain the composite GWETS influent flow of 55 gpm to 65 gpm.
- To insure that the HiPOx oxidant dosing rate is sufficient and to provide trend data for evaluation of the effectiveness of the new extraction wells, weekly GWETS influent and HiPOx effluent samples be collected for the first month after activation of EW-08 and EW-09. The weekly samples should be analyzed for VOC by EPA Method 8260B and for 1,4-dioxane by EPA Method 8260B/SIM.
- After dissolved-phase contaminant concentrations reach maximas in groundwater extraction from EW-08 and EW-09, the air-stripper and vapor-phase GAC systems should be deactivated, allowing the HiPOx and liquid-phase GAC to provide VOC and 1,4-dioxane treatment. This treatment modification will satisfy the GWETS discharge criteria and will save a significant amount of energy – substantially reducing off-site environmental impacts incurred during GWETS operations. The air-stripper and vapor-phase GAC should be maintained and used during start-up of future extraction well(s) (if installed). This treatment train modification should be recorded in the ESD recommended in Section 4.1.
- The Navy and project stakeholders should begin evaluating a less energy-intensive, long-term remedy for the Eastern Plume as the limits of technological effectiveness of GWETS appear to be nearly reached.

FIGURES

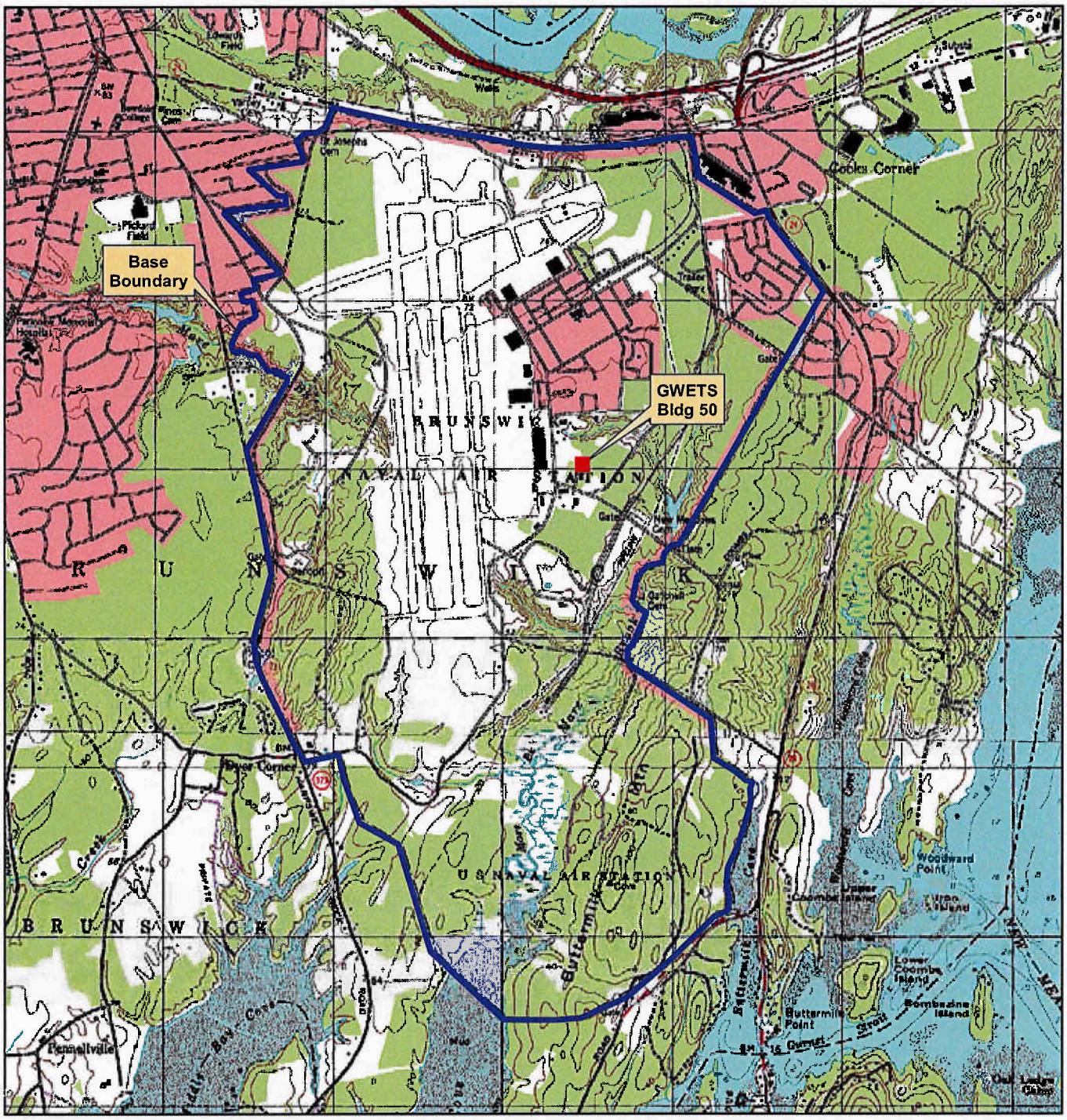

Project No.	5564.001
Description	NAS Brunswick, ME
Coordinate system	NAD 1983, UTM, Zone 19 N in meters
Sources	Naval Base Boundary provided by Navy.

Date	17-APR-2010	Rev.	Date	App. By
DB	C. Guido			
CB	C. Varner			
AB				

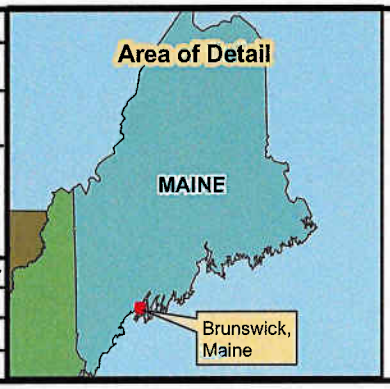

Legend

- Naval Air Station Brunswick Boundary
- Location of Groundwater Extraction and Treatment System (GWETS), Bldg 50

Figure 1-1

Site Location Map
Building 50

Naval Air Station
Brunswick, Maine

GIS Server
C:\NAVY_GIS\TO07_Brunswick\Site1and3\MapDocuments\HiPOx_Fig1-1_SiteLocus.mxd

0 750 1,500 3,000 Feet

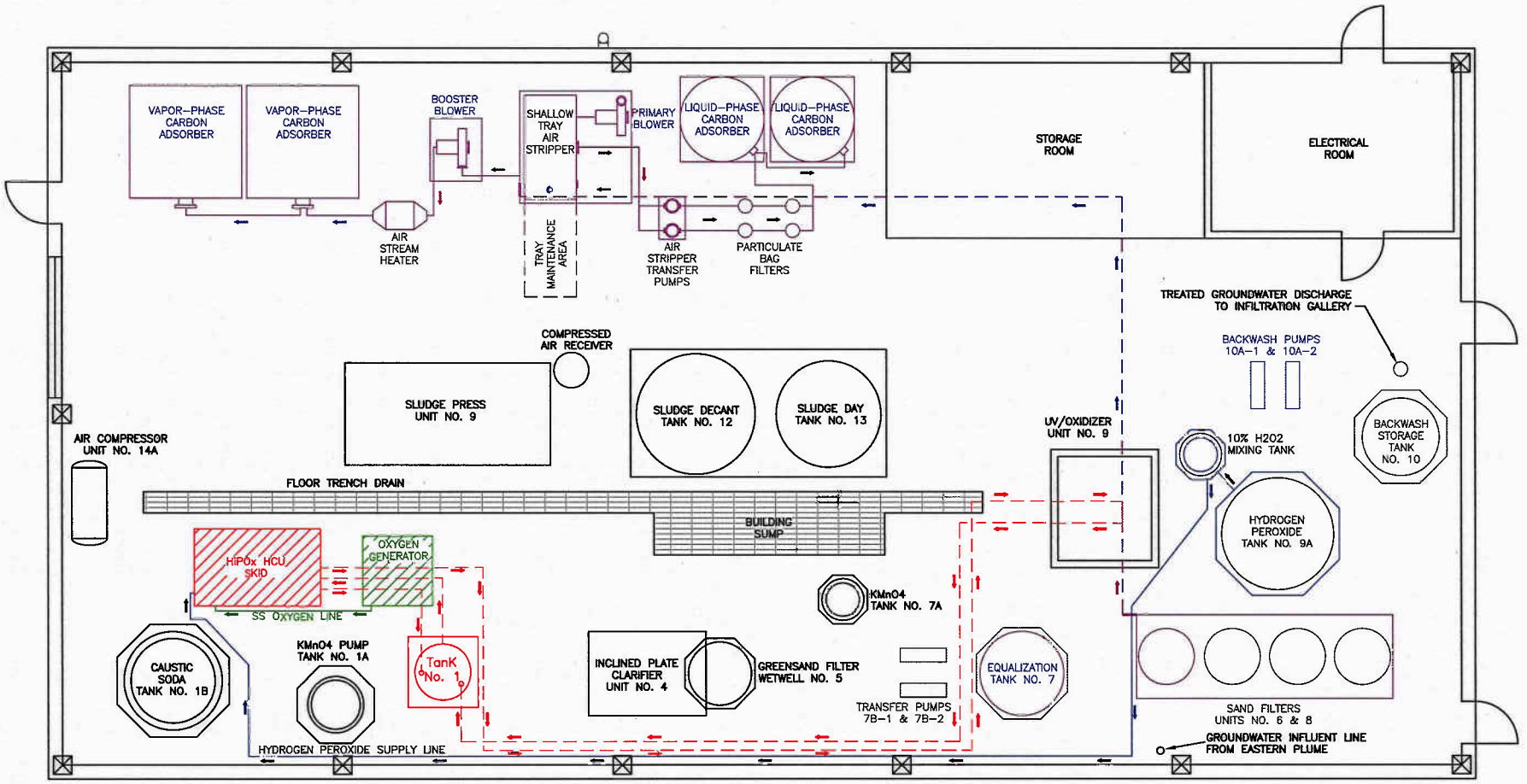

EXISTING GWETS COMPONENTS SHOWN IN MAGENTA
HiPOx COMPONENTS SHOWN IN RED
HYDROGEN PEROXIDE COMPONENTS SHOWN IN BLUE
OXYGEN/OZONE COMPONENTS SHOWN IN GREEN

ECC
33 BOSTON POST ROAD WEST, SUITE 340
MARLBOROUGH, MA 01752

FIGURE 1-2
HIPOX MECHANICAL INSTALLATION (AS-BUILT)
BUILDING 50, NAVAL AIR STATION BRUNSWICK, MAINE

PROJECT MANAGER	DESIGNED BY	DRAWN BY	CHECKED BY
ACE	CJV	CJV	ACE
SCALE	DATE	PROJECT NO.	FILE NO
NTS	3/3/10	5564.001	HIPOXPLAN.DWG

FIGURE 1-3
GWETS with Air-Stripper and GAC

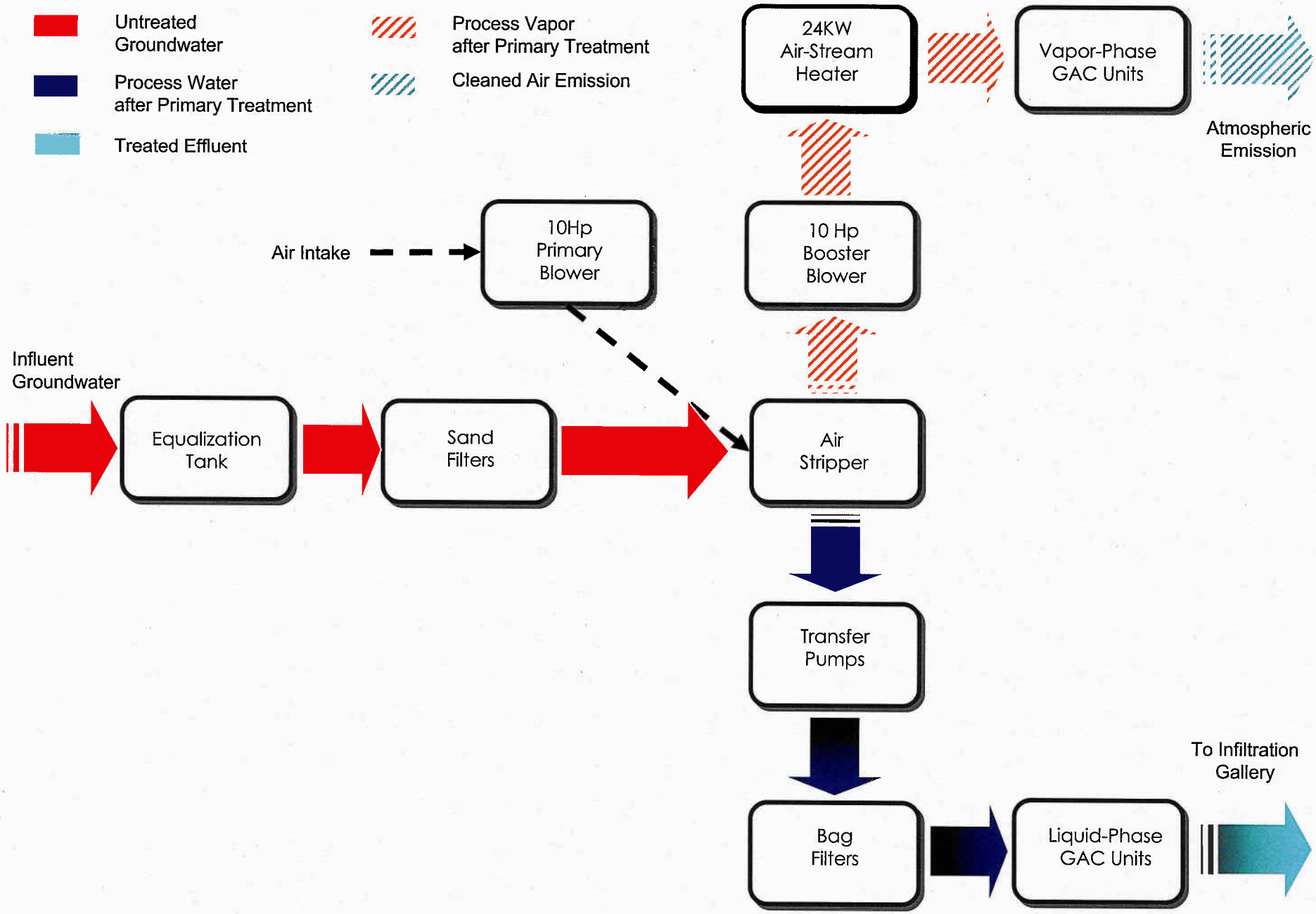

FIGURE 1-4
GWETS with HiPOx and Air-Stripper

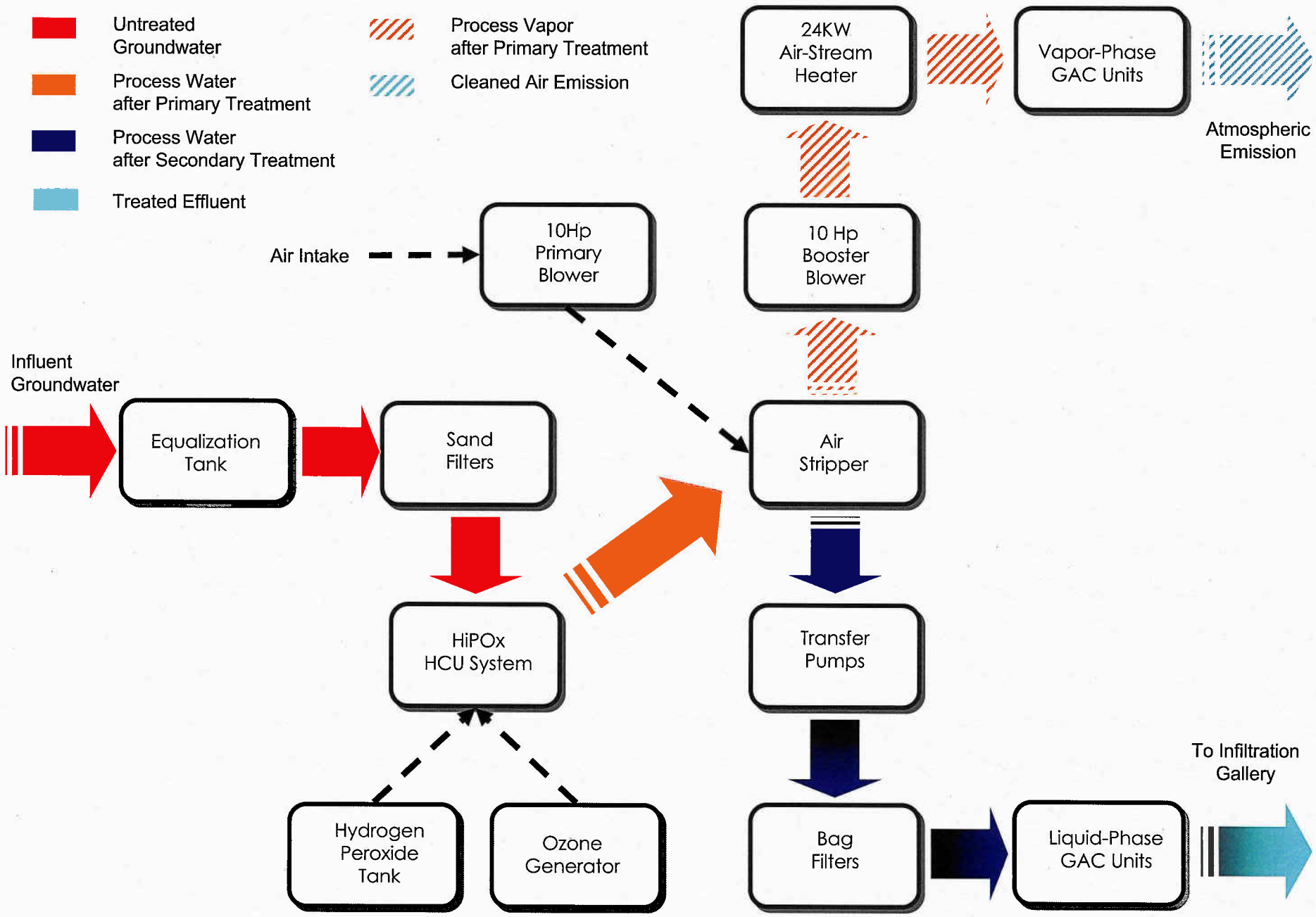

FIGURE 1-5
GWETS with HiPOx and Liquid-Phase GAC

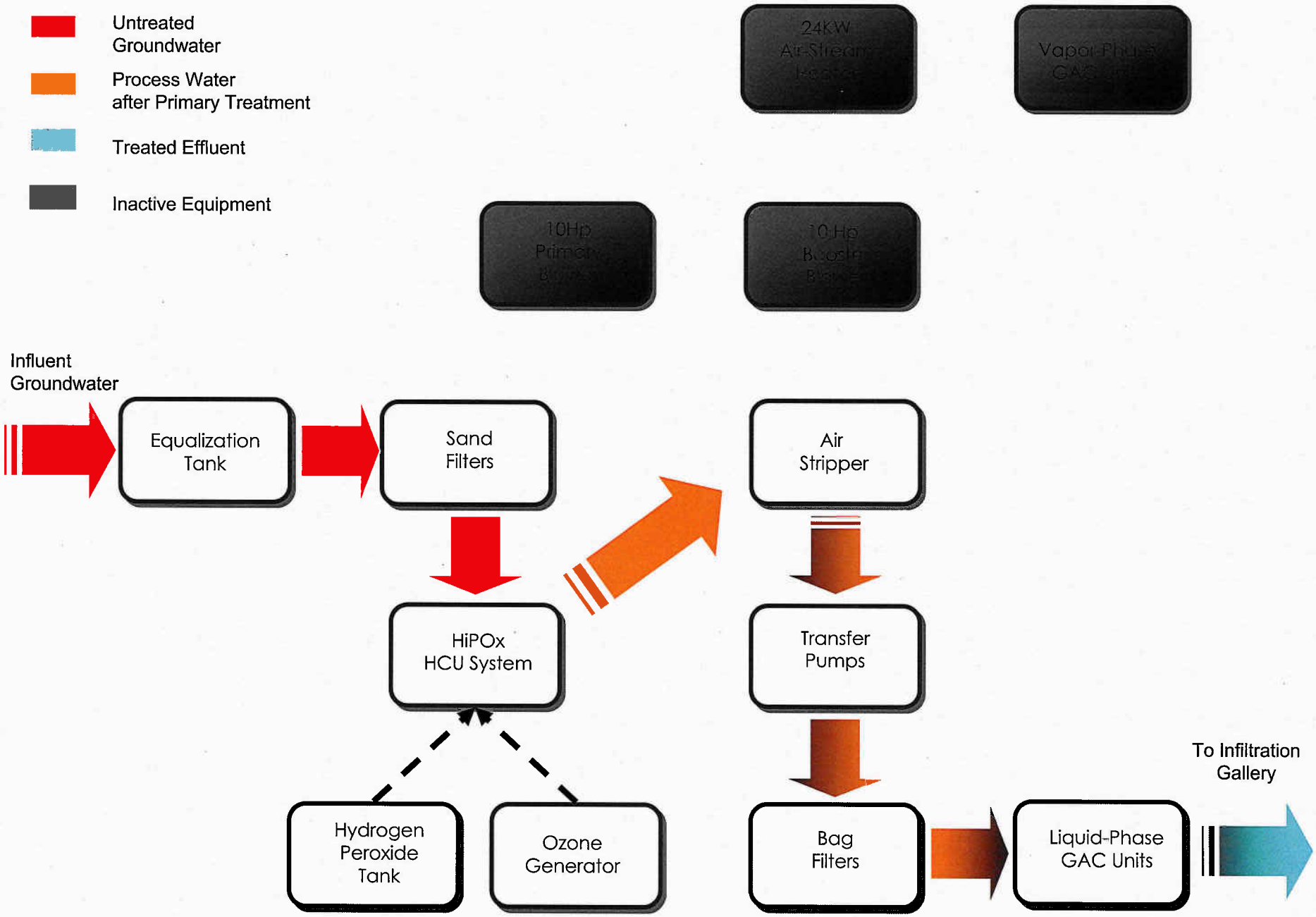

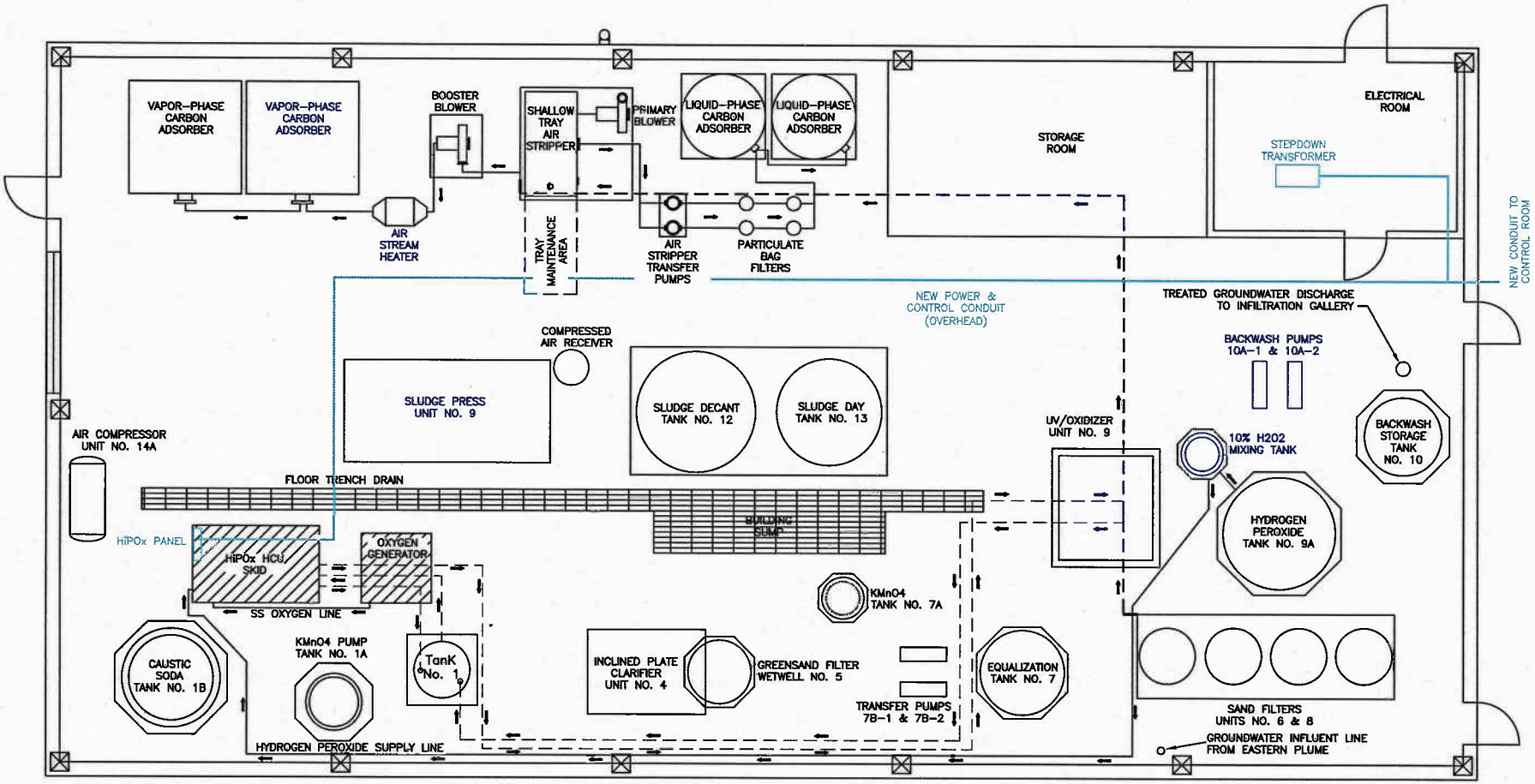

NOTES:

1) OXYGEN GENERATOR POWERED BY HiPOx SUBPANEL.
2) H2O2 TRANSFER PUMPS POWERED BY EXISTING ELECTRIC.

ECC
33 BOSTON POST ROAD WEST, SUITE 340
MARLBOROUGH, MA 01752

FIGURE 2-1
HIPOX ELECTRICAL INSTALLATION (AS-BUILT)
BUILDING 50, NAVAL AIR STATION BRUNSWICK, MAINE

PROJECT MANAGER	DESIGNED BY	DRAWN BY	CHECKED BY
ACE	CJV	CJV	ACE
SCALE	DATE	PROJECT NO.	FILE NO
NTS	3/3/10	5564.001	HIPOXPLAN.DWG

FIGURE 3-1
Volatile Organic Compound Removal Rate & Cumulative GWETS Mass Removal
Naval Air Station Brunswick GWETS

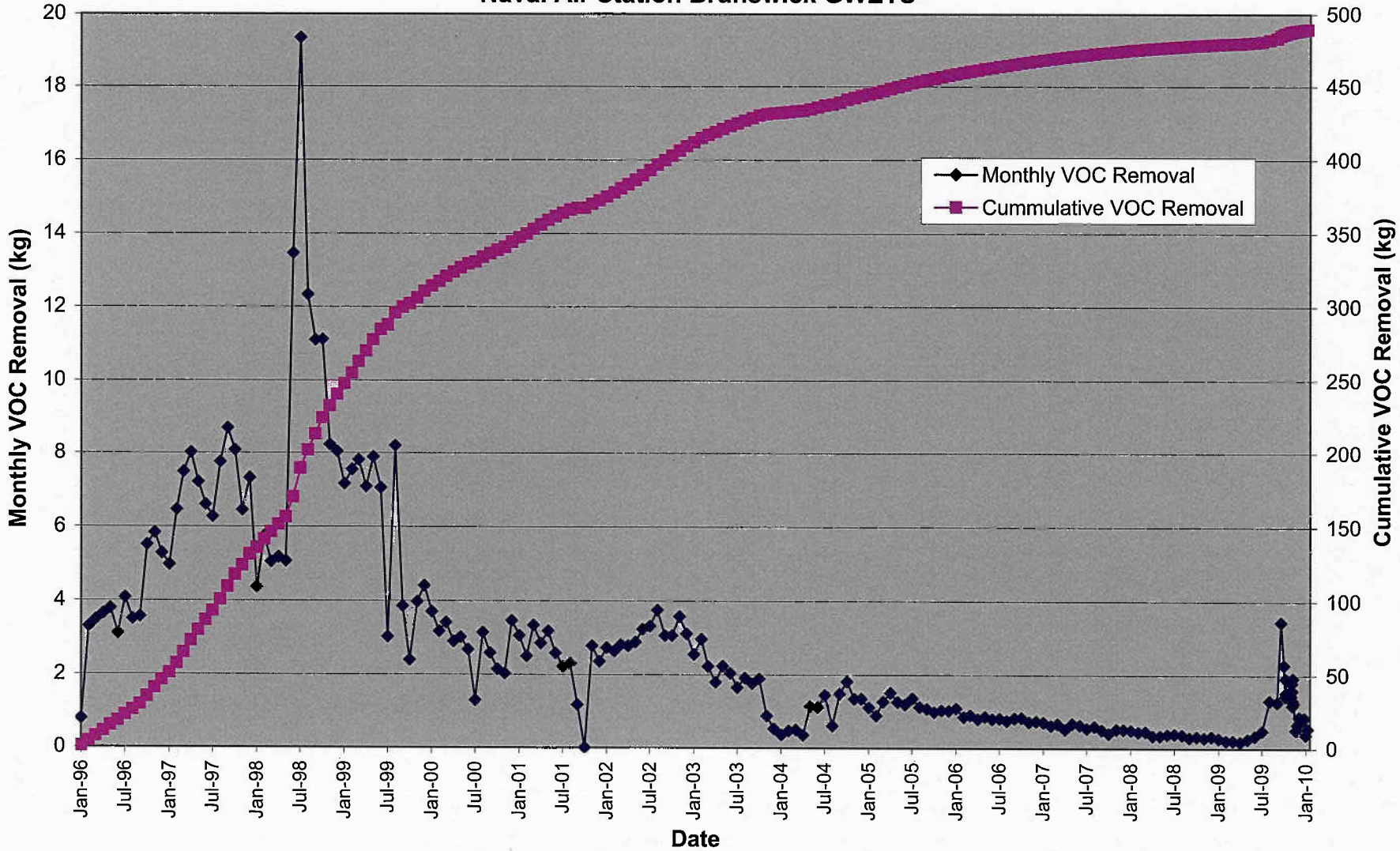

FIGURE 3-2
Volatile Organic Compound Removal Rate & Cumulative GWETS Mass Recovery Since 2008
Naval Air Station Brunswick GWETS

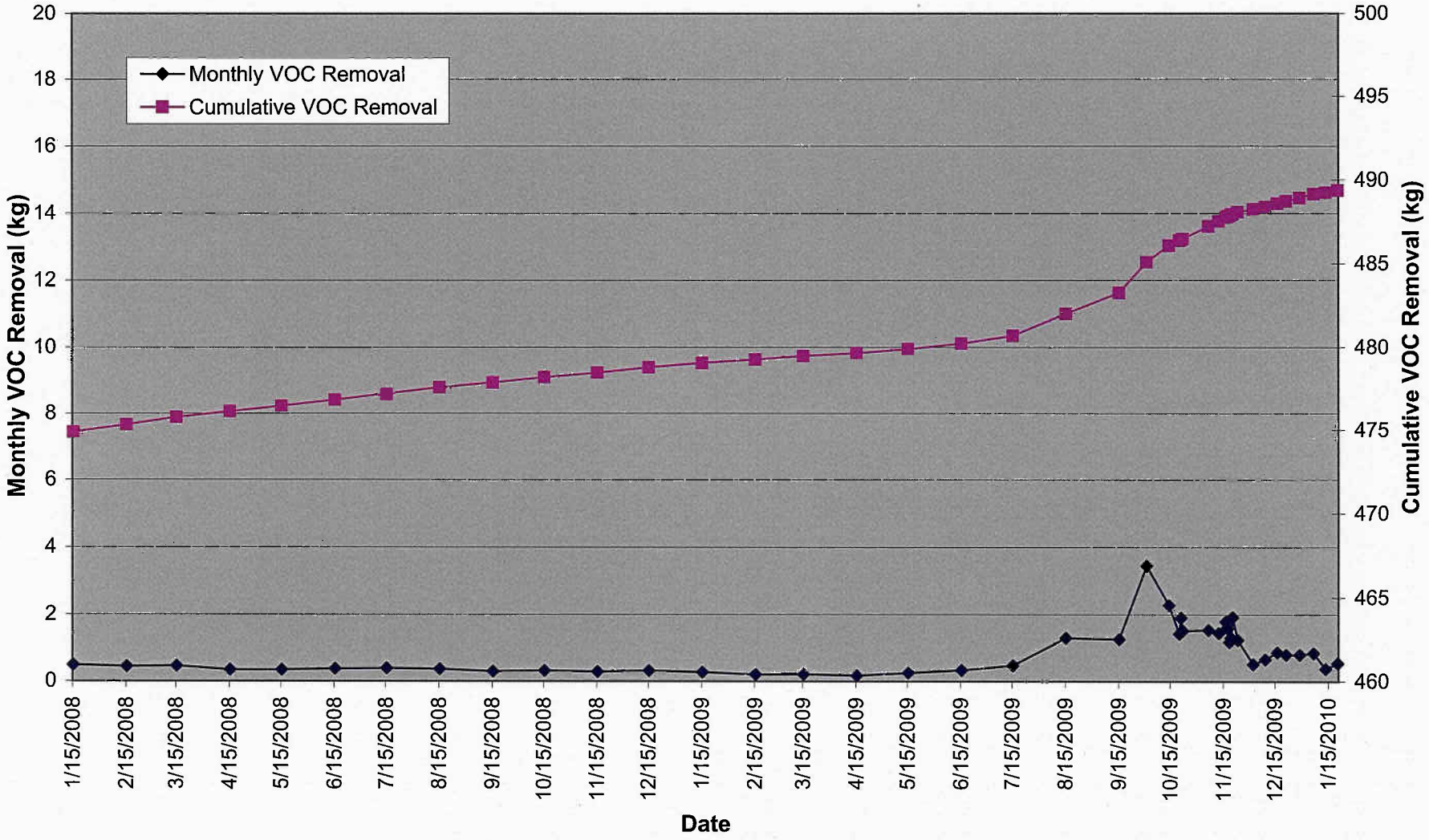

FIGURE 3-3
GWETS Influent (Untreated)
1,4-Dioxane Concentration Trends
6 January 2009 - 20 January 2010

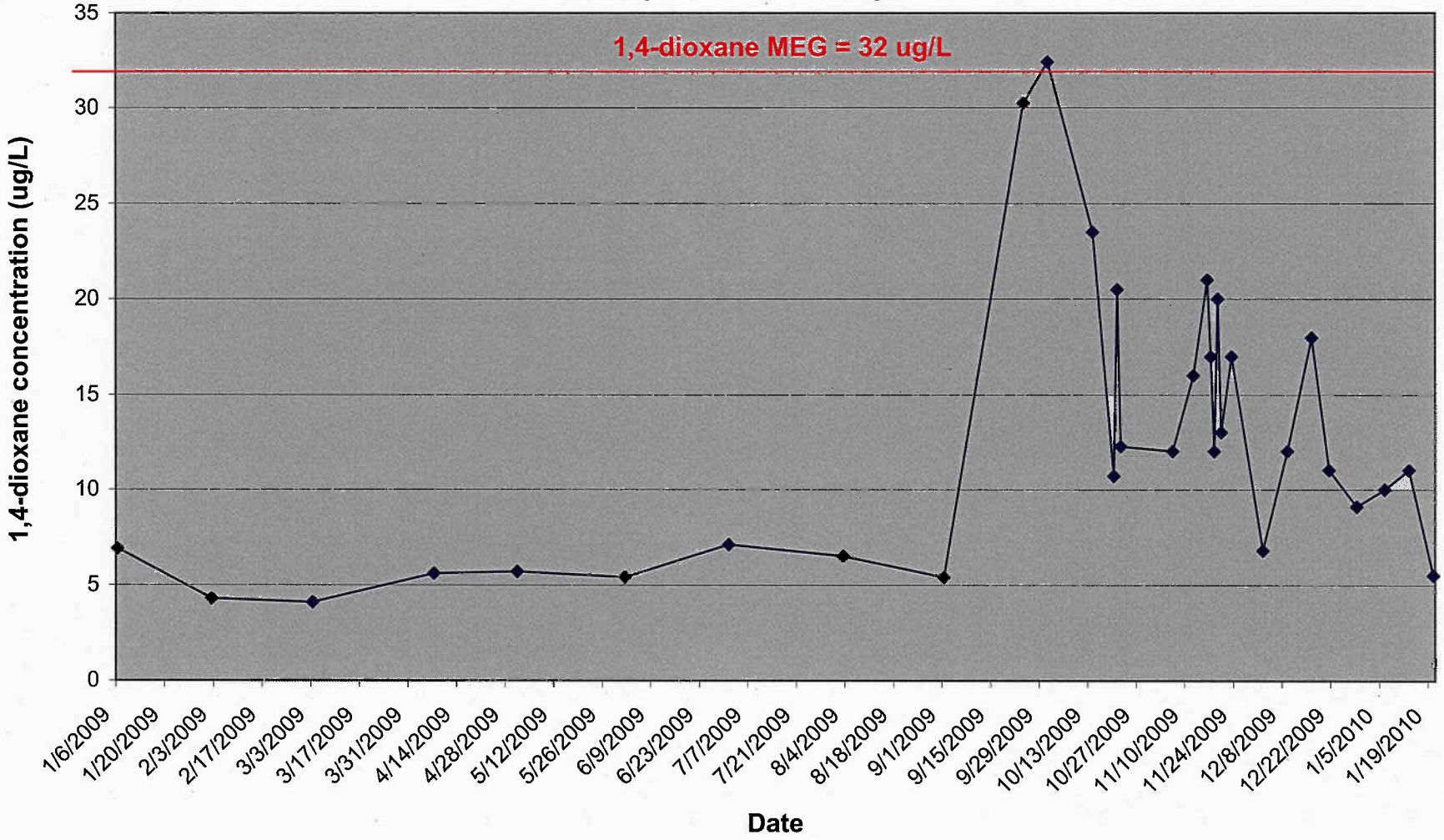

TABLES

Table 2-1
Summary of HiPOx Calibration Data
Groundwater Extraction and Treatment System
Naval Air Station Brunswick, Maine
14 October 2009

			Sample Type:	Influent	HiPOx Effluent	Plant Effluent	Influent	HiPOx Effluent	Plant Effluent
			Field Sample ID:	HP-1014-INF-01	HP-1014-HE-01	HP-1014-PE-01	HP-1014-INF-02	HP-1014-HE-02	HP-1014-PE-02
			Collection Date:	14-Oct-09	14-Oct-09	14-Oct-09	14-Oct-09	14-Oct-09	14-Oct-09
			Time:	11:40 AM	11:45 AM	11:50 AM	6:30 PM	6:35 PM	6:40 PM
Analyte	**Units**	**Federal MCL**	**Maine MEG**						
Chloroform	ug/l	80	70	**0.5 J**	1 U	1 U	**0.5 J**	1 U	1 U
1,1-Dichloroethane	ug/l	NA	70	**14**	**4.5**	1 U	**13**	**6.5**	1 U
1,2-Dichloroethane	ug/l	5	4	**0.6 J**	1 U	1 U	1 U	1 U	1 U
1,1-Dichloroethene	ug/l	7	0.6	**41**	1 U	1 U	**15**	1 U	1 U
cis-1,2-Dichloroethene	ug/l	70	70	**8.1**	1 U	1 U	**5.3**	1 U	1 U
trans-1,2-Dichloroethene	ug/l	100	140	1 U	1 U	1 U	1 U	1 U	1 U
Acetone	ug/l	NA	6,300	5 U	**5.4**	5 U	5 U	5 U	5 U
Tetrachloroethene	ug/l	5	7	**5.1**	1 U	1 U	**3.8**	1 U	1 U
1,1,1-Trichloroethane	ug/l	200	200	**106**	**90**	1 U	**103**	**94**	1 U
Trichloroethene	ug/l	5	32	**90**	1 U	1 U	**66**	1 U	1 U
1,4-dioxane	ug/l	NA	32	**27**	1 U	**12.0**	**20**	1 U	**7.1**
Total VOC				265.3	99.9	0	206.6	100.5	0
Chlorinated ethanes				120.6	94.5	0	116	100.5	0
VOC removal (%)					62.3%	100.0%		51.4%	100.0%
Ethane removal (%)					21.6%	100.0%		13.4%	100.0%
1,4-dioxane removal (%)					100.0%	55.6%		100.0%	64.5%

Notes:

1) Total VOC excludes 1,4-dioxane.
2) Only detected analytes shown.

J = Estimated result
U = Not detected at or above method reporting limit
EPA = U.S. Environmental Protection Agency
MCL = Maximum Contaminant Level
MEG = Maine CDC Maximum Exposure Guideline
NA = Not Available

Table 3-1
Summary of HiPOx Prove-Out Data
Groundwater Extraction and Treatment System
Naval Air Station Brunswick, Maine
20-22 October 2009

			Sample Type:	Influent	HiPOx Effluent	Plant Effluent	Influent	HiPOx Effluent	Plant Effluent	Duplicate	Influent	HiPOx Effluent	Plant Effluent
			Field Sample ID:	HP-1020-INF-01	HP-1020-HE-01	HP-1020-PE-01	HP-1020-INF-02	HP-1020-HE-02	HP-1020-PE-02	HP-1020-PE02X	HP-1021-INF-03	HP-1021-HE-03	HP-1021-PE-03
			Collection Date:	20-Oct-09	20-Oct-09	20-Oct-09	20-Oct-09	20-Oct-09	20-Oct-09	20-0ct-09	21-Oct-09	21-Oct-09	21-Oct-09
			Time:	9:00 AM	9:05 AM	9:10 AM	2:00 PM	2:05 PM	2:10 PM	2:10 PM	7:30 AM	7:35 AM	7:40 AM
Analyte	**Units**	**Federal MCL**	**Maine MEG**										
Chloroform	ug/l	80	70	1 U	1 U	1 U	0.5 J	1 U	1 U	1 U	**0.5 J**	1 U	1 U
1,1-Dichloroethane	ug/l	NA	70	**9.9**	**6.4**	1 U	**11**	**6.2**	1 U	1 U	**14**	**10**	1 U
1,2-Dichloroethane	ug/l	5	4	2 U	1 U	1 U	1 U	1 U	1 U	1 U	1 U	1 U	1 U
1,1-Dichloroethene	ug/l	7	0.6	**5.3**	1 U	1 U	**5.9**	1 U	1 U	1 U	**36**	1 U	1 U
cis-1,2-Dichloroethene	ug/l	70	70	**1.4**	1 U	1 U	**1.4**	1 U	1 U	1 U	**7.5**	1 U	1 U
trans-1,2-Dichloroethene	ug/l	100	140	2 U	1 U	1 U	1 U	1 U	1 U	1 U	1 U	1 U	1 U
Acetone	ug/l	NA	6,300	5 U	5 U	5 U	5 U	5 U	5 U	5 U	5 U	5 U	5 U
Tetrachloroethene	ug/l	5	7	**2.0**	1 U	1 U	2.4	1 U	1 U	1 U	**4.6**	1 U	1 U
1,1,1-Trichloroethane	ug/l	200	200	**97**	**95**	1 U	**101 E**	**94**	1 U	1 U	**100**	**95**	1 U
Trichloroethene	ug/l	5	32	**26**	1 U	1 U	**31**	1 U	1 U	1 U	**86**	1 U	1 U
1,4-dioxane	ug/l	NA	32	**9.4**	1 U	**1.0**	**12**	1 U	**0.8 J**	**0.9 J**	**26**	1 U	1 U
Total VOC				141.6	101.4	0	153.2	100.2	0	0	248.6	105	0
Chlorinated ethanes				106.9	101.4	0	112	100.2	0	0	114	105	0
VOC removal (%)					28.4%	100.0%		34.6%	100.0%			57.8%	100.0%
Ethane removal (%)					5.1%	100.0%		10.5%	100.0%			7.9%	100.0%
1,4-dioxane removal (%)					100.0%	89.4%		100.0%	92.5%			100.0%	100.0%

Table 3-1
Summary of HiPOx Prove-Out Data
Groundwater Extraction and Treatment System
Naval Air Station Brunswick, Maine
20-22 October 2009

			Sample Type:	Influent	HiPOx Effluent	Plant Effluent	Duplicate	Influent	HiPOx Effluent	Plant Effluent	Influent	HiPOx Effluent	Plant Effluent	Duplicate
			Field Sample ID:	HP-2021-INF-04	HP-2021-HE-04	HP-2021-PE-04	HP-2021-PE-O4X	HP-1022-INF-05	HP-1022-HE-05	HP-1022-PE-05	HP-1022-INF-06	HP-1022-HE-06	HP-1022-PE-06	HP-1022-PE-06X
			Collection Date:	21-Oct-09	21-Oct-09	21-Oct-09	21-Oct-09	22-Oct-09	22-Oct-09	22-Oct-09	22-Oct-09	22-Oct-09	22-Oct-09	22-Oct-09
			Time:	12:30 PM	12:35 PM	12:40 PM	12:40 PM	6:30 AM	6:35 AM	6:40 AM	11:30	11:35	11:40	11:40
Analyte	**Units**	**Federal MCL**	**Maine MEG**											
Chloroform	ug/l	80	70	**0.5 J**	1 U	1 U	1 U	1 U	1 U	1 U	1 U	1 U	1 U	1 U
1,1-Dichloroethane	ug/l	NA	70	**12**	**5.4**	1 U	1 U	**11**	**7.5**	1 U	**9.7**	**9.1**	1 U	1 U
1,2-Dichloroethane	ug/l	5	4	1 U	1 U	1 U	1 U	1 U	1 U	1 U	1 U	1 U	1 U	1 U
1,1-Dichloroethene	ug/l	7	0.6	**0.8 J**	1 U	1 U	1 U	**12**	1 U	1 U	**4.0**	1 U	1 U	1 U
cis-1,2-Dichloroethene	ug/l	70	70	1 U	1 U	1 U	1 U	**3.5**	1 U	1 U	**1.1**	1 U	1 U	1 U
trans-1,2-Dichloroethene	ug/l	100	140	1 U	1 U	1 U	1 U	1 U	1 U	1 U	1 U	1 U	1 U	1 U
Acetone	ug/l	NA	6,300	5 U	5 U	5 U	5 U	5 U	5 U	5 U	5 U	5 U	5 U	5 U
Tetrachloroethene	ug/l	5	7	**2.5**	1 U	1 U	1 U	**2.8**	1 U	1 U	**1.9**	1 U	1 U	1 U
1,1,1-Trichloroethane	ug/l	200	200	**98**	**87**	1 U	1 U	**100**	**98**	1 U	**98**	**86**	1 U	1 U
Trichloroethene	ug/l	5	32	**31**	1 U	1 U	1 U	**45**	1 U	1 U	**24**	1 U	1 U	1 U
1,4-dioxane	ug/l	NA	32	**15**	1 U	1 U	1 U	**15**	1 U	**0.6 J**	**9.5**	1 U	**0.6 J**	1 U
Total VOC				144.8	92.4	0	0	174.3	105.5	0	138.7	95.1	0	0
Chlorinated ethanes				110	92.4	0	0	111	105.5	0	107.7	95.1	0	0
VOC removal (%)					36.2%	100.0%			39.5%	100.0%		31.4%	100.0%	
Ethane removal (%)					16.0%	100.0%			5.0%	100.0%		11.7%	100.0%	
1,4-dioxane removal (%)					100.0%	100.0%			100.0%	100.0%		100.0%	100.0%	

Notes:

1) Total VOC excludes 1,4-dioxane.
2) Only detected analytes shown.

J = Estimated result
U = Not detected at or above method reporting limit
EPA = U.S. Environmental Protection Agency
MCL = Maximum Contaminant Level
MEG = Maine CDC Maximum Exposure Guideline
NA = Not Available

Table 3-2
Summary of HiPOx Pilot Study Data
Groundwater Extraction and Treatment System
Naval Air Station Brunswick, Maine
2 November 2009 to 20 January 2010

				HiPOx Air Stripper with Liquid-Phase GAC				HiPOx Air Stripper with Liquid-Phase GAC				HiPOx with Liquid-Phase GAC			
			Sample Type:	Influent	HiPOx Effluent	Plant Effluent	Duplicate	Influent	HiPOx Effluent	Plant Effluent	Duplicate	Influent	HiPOx Effluent	Plant Effluent	Duplicate
			Field Sample ID:	HP-W1-INF-01	HP-W1-HE-01	HP-W1-PE-01	HP-W1-PE-01X	HP-W2-INF-02	HP-W2-HE-02	HP-W2-PE-02	HP-W2-PE-02X	HP-W2-INF-02	HP-W2-HE-02	HP-W2-PE-02	HP-W2-PE-02X
			Collection Date:	6-Nov-09	6-Nov-09	6-Nov-09	6-Nov-09	12-Nov-09	12-Nov-09	12-Nov-09	12-Nov-09	16-Nov-09	16-Nov-09	16-Nov-09	16-Nov-09
Analyte	**Units**	**Federal MCL**	**Maine MEG**												
Chloroform	ug/l	80	70	1 U	2 U	1 U	1 U	1 U	1 U	1 U	1 U	2.5 U	2.5 U	1 U	1 U
1,1-Dichloroethane	ug/l	NA	70	**12**	**7.5**	1 U	1 U	**11**	**4.9**	1 U	1 U	**13**	**6.6**	1 U	1 U
1,2-Dichloroethane	ug/l	5	4	**0.5 J**	2 U	1 U	1 U	1 U	1 U	1 U	1 U	2.5 U	2.5 U	1 U	1 U
1,1-Dichloroethene	ug/l	7	0.6	1 U	2 U	1 U	1 U	**2.8**	1 U	1 U	1 U	**11**	2.5 U	1 U	1 U
cis-1,2-Dichloroethene	ug/l	70	70	**6.1**	2 U	1 U	1 U	**5.1**	1 U	1 U	1 U	**6**	2.5 U	1 U	1 U
trans-1,2-Dichloroethene	ug/l	100	140	**1**	2 U	1 U	1 U	**0.5 J**	1 U	1 U	1 U	2.5 U	2.5 U	1 U	1 U
Acetone	ug/l	NA	6,300	5 U	10 U	5 U	5 U	5 U	5 U	5 U	5 U	12.5 U	12.5 U	5 U	5 U
Tetrachloroethene	ug/l	5	7	**3.2**	2 U	1 U	1 U	**3.8**	1 U	1 U	1 U	**3.6**	2.5 U	1 U	1 U
1,1,1-Trichloroethane	ug/l	200	200	**79**	**66**	1 U	1 U	**68**	**55**	1 U	1 U	**80**	**66**	**1.3**	**1.3**
Trichloroethene	ug/l	5	32	**57**	2 U	1 U	1 U	**58**	1 U	1 U	1 U	**71**	2.5 U	1 U	1 U
1,4-dioxane	ug/l	NA	32	**12**	1U	1U	1U	**16**	1U	1U	1U	**21**	1U	1U	1U
Total VOC				158.8	73.5	0	0	149.2	59.9	0	0	184.6	72.6	1.3	1.3
Chlorinated ethanes				91.5	73.5	0	0	79	59.9	0	0	93	72.6	1.3	1.3
VOC removal (%)					53.7%	100.0%			59.9%	100.0%			60.7%	99.3%	
Ethane removal (%)					19.7%	100.0%			24.2%	100.0%			21.9%	98.6%	
1,4-dioxane removal (%)					100.0%	100.0%			100.0%	100.0%			100.0%	100.0%	

Table 3-2
Summary of HiPOx Pilot Study Data
Groundwater Extraction and Treatment System
Naval Air Station Brunswick, Maine
2 November 2009 to 20 January 2010

				HiPOx with Liquid-Phase GAC				HiPOx with Liquid-Phase GAC				HiPOx with Liquid-Phase GAC			
			Sample Type:	Influent	HiPOx Effluent	Plant Effluent	Duplicate	Influent	HiPOx Effluent	Plant Effluent	Duplicate	Influent	HiPOx Effluent	Plant Effluent	Duplicate
			Field Sample ID:	HP-W2-INF-02	HP-W2-HE-02	HP-W2-PE-02	HP-W2-PE-02X	HP-W2-INF-02	HP-W2-HE-02	HP-W2-PE-02	HP-W2-PE-02X	HP-W2-INF-02	HP-W2-HE-02	HP-W2-PE-02	HP-W2-PE-02X
			Collection Date:	17-Nov-09	17-Nov-09	17-Nov-09	17-Nov-09	18-Nov-09	18-Nov-09	18-Nov-09	18-Nov-09	19-Nov-09	19-Nov-09	19-Nov-09	19-Nov-09
Analyte	**Units**	**Federal MCL**	**Maine MEG**												
Chloroform	ug/l	80	70	2.5 U	2.5 U	1 U	1 U	2.5 U	2.5 U	1 U	1 U	2.5 U	2.5 U	1 U	1 U
1,1-Dichloroethane	ug/l	NA	70	**12**	**6.9**	**0.7 J**	**0.7 J**	**10**	**5.2**	**1.1**	**1.1**	**11**	**7.2**	**1.8**	**1.8**
1,2-Dichloroethane	ug/l	5	4	2.5 U	2.5 U	1 U	1 U	2.5 U	2.5 U	1 U	1 U	2.5 U	2.5 U	1 U	1 U
1,1-Dichloroethene	ug/l	7	0.6	**21**	2.5 U	1 U	1 U	**6.4**	2.5 U	1 U	1 U	**17**	2.5 U	1 U	1 U
cis-1,2-Dichloroethene	ug/l	70	70	**5.4**	2.5 U	1 U	1 U	**3.7**	2.5 U	1 U	1 U	**5.1**	2.5 U	1 U	1 U
trans-1,2-Dichloroethene	ug/l	100	140	2.5 U	2.5 U	1 U	1 U	2.5 U	2.5 U	1 U	1 U	2.5 U	2.5 U	1 U	1 U
Acetone	ug/l	NA	6,300	12.5 U	12.5 U	5 U	5 U	12.5 U	12.5 U	5 U	5 U	12.5 U	12.5 U	5 U	5 U
Tetrachloroethene	ug/l	5	7	**3.2**	2.5 U	1 U	1 U	**2.2 J**	2.5 U	1 U	1 U	**3**	2.5 U	1 U	1 U
1,1,1-Trichloroethane	ug/l	200	200	**74**	**73**	**9.3**	**9.5**	**68**	**59**	**13**	**13**	**64**	**64**	**20**	**20**
Trichloroethene	ug/l	5	32	**60**	2.5 U	1 U	1 U	**40**	2.5 U	1 U	1 U	**45**	2.5 U	1 U	1 U
1,4-dioxane	ug/l	NA	32	**17**	1 U	1 U	1 U	**12**	1 U	1 U	1 U	**20**	1 U	1 U	1 U
Total VOC				175.6	79.9	10	10.2	130.3	64.2	14.1	14.1	145.1	71.2	21.8	21.8
Chlorinated ethanes				86	79.9	10	10.2	78	64.2	14.1	14.1	75	71.2	21.8	21.8
VOC removal (%)					54.5%	94.3%			50.7%	89.2%			50.9%	85.0%	
Ethane removal (%)					7.1%	88.4%			17.7%	81.9%			5.1%	70.9%	
1,4-dioxane removal (%)					100.0%	100.0%			100.0%	100.0%			100.0%	100.0%	

Table 3-2
Summary of HiPOx Pilot Study Data
Groundwater Extraction and Treatment System
Naval Air Station Brunswick, Maine
2 November 2009 to 20 January 2010

				HiPOx with Liquid-Phase GAC				HiPOx Air Stripper with Liquid-Phase GAC				HiPOx Air Stripper with Liquid-Phase GAC			
			Sample Type:	Influent	HiPOx Effluent	Plant Effluent	Duplicate	Influent	HiPOx Effluent	Plant Effluent	Duplicate	Influent	HiPOx Effluent	Plant Effluent	Duplicate
			Field Sample ID:	HP-W2-INF-02	HP-W2-HE-02	HP-W2-PE-02	HP-W2-PE-02X	HP-W4-INF-04	HP-W4-HE-04	HP-W4-PE-04	HP-W4-PE-04X	HP-W5-INF-05	HP-W5-HE-05	HP-W5-PE-05	HP-W5-PE-05X
			Collection Date:	20-Nov-09	20-Nov-09	20-Nov-09	20-Nov-09	23-Nov-09	23-Nov-09	23-Nov-09	23-Nov-09	2-Dec-09	2-Dec-09	2-Dec-09	2-Dec-09
Analyte	**Units**	**Federal MCL**	**Maine MEG**												
Chloroform	ug/l	80	70	**0.5 J**	1 U	1 U	1 U	2.5 U	2.5 U	1 U	1 U	2.5 U	2.5 U	1 U	1 U
1,1-Dichloroethane	ug/l	NA	70	**15**	**6.7**	**2.1**	**2.2**	**9.5**	**6**	**0.7 J**	**0.7 J**	**8.8**	**6.8**	1 U	1 U
1,2-Dichloroethane	ug/l	5	4	1 U	1 U	1 U	1 U	2.5 U	2.5 U	1 U	1 U	2.5 U	2.5 U	1 U	1 U
1,1-Dichloroethene	ug/l	7	0.6	**29**	1 U	1 U	1 U	**17**	2.5 U	1 U	1 U	2.5 U	2.5 U	1 U	1 U
cis-1,2-Dichloroethene	ug/l	70	70	**7.9**	1 U	1 U	1 U	**4.1**	2.5 U	1 U	1 U	2.5 U	2.5 U	1 U	1 U
trans-1,2-Dichloroethene	ug/l	100	140	1 U	1 U	1 U	1 U	2.5 U	2.5 U	1 U	1 U	2.5 U	2.5 U	1 U	1 U
Acetone	ug/l	NA	6,300	5 U	5 U	5 U	5 U	12.5 U	12.5 U	5 U	5 U	12.5 U	12.5 U	5 U	5 U
Tetrachloroethene	ug/l	5	7	**4.5**	1 U	1 U	1 U	**2.7**	2.5 U	1 U	1 U	**1.4 J**	2.5 U	1 U	1 U
1,1,1-Trichloroethane	ug/l	200	200	**83**	**66**	**24**	**25**	**60**	**59**	**5.6**	**5.5**	**52**	**56**	**1.9**	**1.8**
Trichloroethene	ug/l	5	32	**73**	1 U	1 U	1 U	**44**	2.5 U	1 U	1 U	**10**	2.5 U	1 U	1 U
1,4-dioxane	ug/l	NA	32	**13**	1 U	1 U	1 U	**17**	1 U	1 U	1 U	**6.8**	1 U	1 U	1 U
Total VOC				212.9	72.7	26.1	27.2	137.3	65	6.3	6.2	72.2	62.8	1.9	1.8
Chlorinated ethanes				98	72.7	26.1	27.2	69.5	65	6.3	6.2	60.8	62.8	1.9	1.8
VOC removal (%)					65.9%	87.7%			52.7%	95.4%			13.0%	97.4%	
Ethane removal (%)					25.8%	73.4%			6.5%	90.9%			0.0%	96.9%	
1,4-dioxane removal (%)					100.0%	100.0%			100.0%	100.0%			100.0%	100.0%	

Table 3-2
Summary of HiPOx Pilot Study Data
Groundwater Extraction and Treatment System
Naval Air Station Brunswick, Maine
2 November 2009 to 20 January 2010

				HiPOx Air Stripper with Liquid-Phase GAC				HiPOx Air Stripper with Liquid-Phase GAC				HiPOx Air Stripper with Liquid-Phase GAC			
			Sample Type:	Influent	HiPOx Effluent	Plant Effluent	Duplicate	Influent	HiPOx Effluent	Plant Effluent	Duplicate	Influent	HiPOx Effluent	Plant Effluent	Duplicate
			Field Sample ID:	HP-W6-INF-06	HP-W6-HE-06	HP-W6-PE-06	HP-W6-PE-06X	HP-W7-INF-07	HP-W7-HE-07	HP-W7-PE-07	HP-W7-PE-07X	HP-W8-INF-08	HP-W8-HE-08	HP-W8-PE-08	HP-W8-PE-08X
			Collection Date:	9-Dec-09	9-Dec-09	9-Dec-09	9-Dec-09	16-Dec-09	16-Dec-09	16-Dec-09	16-Dec-09	21-Dec-09	21-Dec-09	21-Dec-09	21-Dec-09
Analyte	**Units**	**Federal MCL**	**Maine MEG**												
Chloroform	ug/l	80	70	2.5 U	2.5 U	1 U	1 U	2.5 U	2.5 U	1 U	1 U	**0.5 J**	**0.5 J**	1 U	1 U
1,1-Dichloroethane	ug/l	NA	70	**11**	**9.8**	1 U	1 U	**13**	**9.3**	1 U	1 U	**10**	**6.1**	1 U	1 U
1,2-Dichloroethane	ug/l	5	4	2.5 U	2.5 U	1 U	1 U	2.5 U	2.5 U	1 U	1 U	1 U	1 U	1 U	1 U
1,1-Dichloroethene	ug/l	7	0.6	2.5 U	2.5 U	1 U	1 U	**2.0 J**	2.5 U	1 U	1 U	**13**	1 U	1 U	1 U
cis-1,2-Dichloroethene	ug/l	70	70	2.5 U	2.5 U	1 U	1 U	2.5 U	2.5 U	1 U	1 U	**3.1**	1 U	1 U	1 U
trans-1,2-Dichloroethene	ug/l	100	140	2.5 U	2.5 U	1 U	1 U	2.5 U	2.5 U	1 U	1 U	1 U	1 U	1 U	1 U
Acetone	ug/l	NA	6,300	12.5 U	12.5 U	5 U	5 U	12.5 U	12.5 U	5 U	5 U	5 U	5 U	5 U	5 U
Tetrachloroethene	ug/l	5	7	**2.3 J**	2.5 U	1 U	1 U	**2.4 J**	2.5 U	1 U	1 U	**1.4**	1 U	1 U	1 U
1,1,1-Trichloroethane	ug/l	200	200	**55**	**53**	**1.7**	**1.4**	**56**	**50**	**1.5**	**1.3**	**52**	**50**	**1.3**	**1.3**
Trichloroethene	ug/l	5	32	**25**	2.5 U	1 U	1 U	**49**	2.5 U	1 U	1 U	**33**	1 U	1 U	1 U
1,4-dioxane	ug/l	NA	32	**12**	**1.6**	1 U	1 U	**18**	**7.4**	1 U	1 U	**11**	1 U	1 U	1 U
Total VOC				93.3	62.8	1.7	1.4	122.4	59.3	1.5	1.3	113	56.6	1.3	1.3
Chlorinated ethanes				66	62.8	1.7	1.4	69	59.3	1.5	1.3	62	56.1	1.3	1.3
VOC removal (%)					32.7%	98.2%			51.6%	98.8%			49.9%	98.8%	
Ethane removal (%)					4.8%	97.4%			14.1%	97.8%			9.5%	97.9%	
1,4-dioxane removal (%)					86.7%	100.0%			58.9%	100.0%			100.0%	100.0%	

Table 3-2
Summary of HiPOx Pilot Study Data
Groundwater Extraction and Treatment System
Naval Air Station Brunswick, Maine
2 November 2009 to 20 January 2010

				HiPOx Air Stripper with Liquid-Phase GAC				HiPOx Air Stripper with Liquid-Phase GAC			
			Sample Type:	Influent	HiPOx Effluent	Plant Effluent	Duplicate	Influent	HiPOx Effluent	Plant Effluent	Duplicate
			Field Sample ID:	HP-W9-INF-09	HP-W9-HE-09	HP-W9-PE-09	HP-W9-PE-09X	HP-W10-INF-10	HP-W10-HE-10	HP-W10-PE-10	HP-W10-PE-10X
			Collection Date:	29-Dec-09	29-Dec-09	29-Dec-09	29-Dec-09	6-Jan-10	6-Jan-10	6-Jan-10	6-Jan-10
Analyte	**Units**	**Federal MCL**	**Maine MEG**								
Chloroform	ug/l	80	70	**0.6 J**	**0.5 J**	1 U	1 U	**0.5 J**	1 U	1 U	1 U
1,1-Dichloroethane	ug/l	NA	70	**11**	**6**	1 U	1 U	**11**	**6.5**	1 U	1 U
1,2-Dichloroethane	ug/l	5	4	1 U	1 U	1 U	1 U	1 U	1 U	1 U	1 U
1,1-Dichloroethene	ug/l	7	0.6	**14**	1 U	1 U	1 U	**13**	1 U	1 U	1 U
cis-1,2-Dichloroethene	ug/l	70	70	**3.6**	1 U	1 U	1 U	**3.6**	1 U	1 U	1 U
trans-1,2-Dichloroethene	ug/l	100	140	1 U	1 U	1 U	1 U	1 U	1 U	1 U	1 U
Acetone	ug/l	NA	6,300	5 U	**5**	5 U	5 U	5 U	5 U	5 U	5 U
Tetrachloroethene	ug/l	5	7	**1.5**	1 U	1 U	1 U	**2.1**	1 U	1 U	1 U
1,1,1-Trichloroethane	ug/l	200	200	**49**	**46**	**1.1**	**1.1**	**50**	**46**	**0.9 J**	**0.8 J**
Trichloroethene	ug/l	5	32	**33**	1 U	1 U	1 U	**39**	1 U	1 U	1 U
1,4-dioxane	ug/l	NA	32	**9.1**	1 U	1 U	1 U	**10**	**3.8**	1 U	1 U
Total VOC				112.7	57.5	1.1	1.1	119.2	52.5	0.9	0.8
Chlorinated ethanes				60	52	1.1	1.1	61	52.5	0.9	0.8
VOC removal (%)					49.0%	99.0%			56.0%	99.2%	
Ethane removal (%)					13.3%	98.2%			13.9%	98.5%	
1,4-dioxane removal (%)					100.0%	100.0%			72.0%	100.0%	

Table 3-2
Summary of HiPOx Pilot Study Data
Groundwater Extraction and Treatment System
Naval Air Station Brunswick, Maine
2 November 2009 to 20 January 2010

				HiPOx Air Stripper with Liquid-Phase GAC				HiPOx Air Stripper with Liquid-Phase GAC			
			Sample Type:	Influent	HiPOx Effluent	Plant Effluent	Duplicate	Influent	HiPOx Effluent	Plant Effluent	Duplicate
			Field Sample ID:	HP-W11-INF-11	HP-W11-HE-11	HP-W11-PE-11	HP-W11-PE-11X	HP-W12-INF-12	HP-W12-HE-12	HP-W12-PE-12	HP-W12-PE-12X
			Collection Date:	13-Jan-10	13-Jan-10	13-Jan-10	13-Jan-10	20-Jan-10	20-Jan-10	20-Jan-10	20-Jan-10
Analyte	**Units**	**Federal MCL**	**Maine MEG**								
Chloroform	ug/l	80	70	1 U	1 U	1 U	1 U	**0.6 J**	**0.5 J**	1 U	1 U
1,1-Dichloroethane	ug/l	NA	70	**7.1**	**3.7**	1 U	1 U	**8.9**	**6.7**	1 U	1 U
1,2-Dichloroethane	ug/l	5	4	1 U	1 U	1 U	1 U	1 U	1 U	1 U	1 U
1,1-Dichloroethene	ug/l	7	0.6	1 U	1 U	1 U	1 U	**2.6**	1 U	1 U	1 U
cis-1,2-Dichloroethene	ug/l	70	70	1 U	1 U	1 U	1 U	**0.6 J**	1 U	1 U	1 U
trans-1,2-Dichloroethene	ug/l	100	140	1 U	1 U	1 U	1 U	1 U	1 U	1 U	1 U
Acetone	ug/l	NA	6.300	5 U	5 U	5 U	5 U	5 U	5 U	5 U	5 U
Tetrachloroethene	ug/l	5	7	**1.5**	1 U	1 U	1 U	1 U	1 U	1 U	1 U
1,1,1-Trichloroethane	ug/l	200	200	**34**	**31**	**0.6 J**	**0.7 J**	**43**	**40**	**0.6 J**	**0.6 J**
Trichloroethene	ug/l	5	32	**10**	1 U	1 U	1 U	**21**	1 U	1 U	1 U
1,4-dioxane	ug/l	NA	32	**11**	1 U	1 U	1 U	**5.5**	1 U	1 U	1 U
Total VOC				52.6	34.7	0.6	0.7	76.7	47.2	0.6	0.6
Chlorinated ethanes				41.1	34.7	0.6	0.7	51.9	46.7	0.6	0.6
VOC removal (%)					34.0%	98.9%			38.5%	99.2%	
Ethane removal (%)					15.6%	98.5%			10.0%	98.8%	
1,4-dioxane removal (%)					100.0%	100.0%			100.0%	100.0%	

Notes:

1) Total VOC excludes 1,4-dioxane.
2) Only detected analytes shown.

J = Estimated result
U = Not detected at or above method reporting limit
EPA = U.S. Environmental Protection Agency
MCL = Maximum Contaminant Level
MEG = Maine CDC Maximum Exposure Guideline
NA = Not Available

APPENDIX A
APT CUT-SHEETS & HiPOx DESIGN DRAWINGS

Applied

Applied Process Technology, Inc.

Clean Water. No Waste.

HiPOx HCU

Advanced Oxidation System

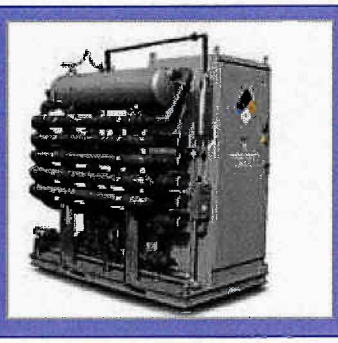

HCU

The HiPOx HCU is an advanced oxidation system that combines ozone and hydrogen peroxide to destroy groundwater contaminants in a continuous flow reactor. The system utilizes multiple reagent injection points and mixers to maximize contaminant destruction in a waste-free process.

The HCU is a compact skid-mounted unit with a footprint ideal for very small spaces. Low-to-medium ozone capacities make the HCU appropriate for low-flow sites with low-to-moderate contaminant concentrations.

- ✓ PLC control system provides for unattended and automated operation
- ✓ Fail-safe operation
- ✓ Automatic paging in event of shutdown
- ✓ Operating set points adjusted via local Operator Interface Terminal (OIT) or remotely via modem with optional SCADA package

STANDARD SPECIFICATIONS

Flow Rate	3 – 160 GPM
Ozone Capacity	Up to 20 lbs/day
Dimensions	8'L x 4'6"Wx 7'6"H
Weight	Approx. 4,500 lbs
Electrical Requirements	208VAC, 3Ø or 240VAC, 1Ø, 60 Hz, 55A maximum
Power Consumption	7-13 kW

SYSTEM CONFIGURATION AND FEATURES

Enclosure/Skid	Galvanized-skid platform; weather-resistant enclosure; corrosion-resistant piping; NFPA signage; power and process connections conveniently located to facilitate quick installation
Safety	Shop tested; ozone detector and destruct unit; fail-safe shutdown features; all ozone-containing piping is joint-free or (double-)contained within monitored enclosures

✓ Waste-Free Contaminant Destruction
✓ Scalable Process for Predictable Results
✓ Highly Effective, Low-Cost Solution

OZONE GENERATION / DISTRIBUTION SYSTEM*

Generator Capacity	Up to 20 lbs/day**
Concentration	8% – 10% by weight
Injection Capacity	5 – 150 mg/L ozone dose
Injection Piping	PFA Teflon™

**includes rack-mounted, solid-state ozone generator(s), ozone manifold with metering and check valves, automatic pressure control and shutoff valve*
***uses oxygen from liquid oxygen dewars or produced by oxygen generation system*

HYDROGEN PEROXIDE SYSTEM*

Storage	25-gallon, non-metallic tank
Concentration	5% – 35% technical grade
Injection Piping	Polyethylene

**injection system included*

OXYGEN SYSTEM*

Standard Supply	Liquid-oxygen Dewar cylinders
Size	160 – 265 liters
Concentration	99.9+%vol (Grade 6)

Optional Supply	PSA**-enriched gas
Concentration	90+%vol (-70°F dew point)

**oxygen flow controller included; optional gas manifold available*
***Pressure-Swing Adsorption*

REACTOR SYSTEM*

Flow Rate	3 – 160 GPM
Reactor Construction	PVC piping with internal static mixers
Reagent Control	Reagent addition precisely controlled and adjusted as needed at each injector

**includes gas/liquid separator and inlet flow meter; optional feed tank, pump and recycle valve also available*

COOLING SYSTEM

Method	Refrigerated package chiller with outdoor condenser

- ✓ Multiple ozone injection points maximize process efficiency and contaminant destruction
- ✓ Precision instrumentation for accurate reagent control
- ✓ One-button startup and shutdown; touchscreen control display for ease of operation

™Teflon is a registered trademark of the DuPont Co.

Applied Process Technology, Inc.
3333 Vincent Road, Suite 222, Pleasant Hill, CA 94523
tel: 925-977-1811 · fax: 925-977-1818 · toll free: 1-888-307-2749
www.aptwater.com · info@aptwater.com

J1136 - H&S ENVIRONMENTAL
BRUNSWICK NAS
HiPOx DRAWING PACKAGE

25 August, 2009

REV	DESCRIPTION	NAME	DATE
1	PER CUSTOMER COMMENTS, JULY 23, 2009	08/25/09	pjk
0	FOR COSTUMER APPROVAL	07/20/09	pjk

REVISION HISTORY

APPLIED PROCESS TECHNOLOGY

CLIENT: H&S ENVIRONMENTAL

PROJECT: J1136

LOCATION: BRUNSWICK, ME

TITLE: COVER SHEET

DRAWN		
DESIGN	pjk	07/16/09
CHECKED	cl	07/17/09
APPROVED		
APPROVED		
NEXT ASSEMBLY:		

SIZE D | DRAWING NO. COVER | REV 1

SCALE: 1X1 | FILE:J1136-COVER | SHEET 1 OF

PROPRIETARY

THIS DOCUMENT CONTAINS PROPRIETARY INFORMATION OF APPLIED PROCESS TECHNOLOGY INC., AND ITS RECEIPT OR POSSESSION DOES NOT CONVEY ANY RIGHTS TO REPRODUCE, DISCLOSE ITS CONTENTS OR TO MANUFACTURE, USE OR SELL ANYTHING IT MAY DESCRIBE. REPRODUCTION, DISCLOSURE OR USE WITHOUT THE WRITTEN AUTHORIZATION OF APPLIED PROCESS TECHNOLOGY INC., IS EXPRESSLY FORBIDDEN.

ABBREVIATIONS

AB	ANCHOR BOLT
ASSY	ASSEMBLY
BF	BLIND FLANGE
BOM	BILL OF MATERIALS
BOS	BOTTOM OF STEEL
C	CONDUIT
CC	CUBIC CENTIMETERS
℄	CENTER LINE
CYL	CYLINDER
DIA	DIAMETER
DIM	DIMENTION
DWG	DRAWING
EA	EACH
EL	ELEVATION
ELEC	ELECTRIC
EXIST	EXISTING
FDN	FOUNDATION
FJB	FIELD JUNCTION BOX
FNPT	FEMALE NPT
FLR	FLOOR
FT	FOOT, FEET
GPM	GALLONS PER MINUTE
HP	HORSEPOWER
ID	INSIDE DIAMETER
I/O	INPUT/OUTPUT
IN	INCHES
LB	POUND
mA	MILLIAMPS
MATL	MATERIAL
MAX	MAXIMUM
MIN	MINIMUM, MINUTE
ML	MILLILITERS
MNPT	MALE NPT
N	NORTH
NPT	NATIONAL PIPE THREAD
OAL	OVERALL LENGTH
OAH	OVERALL HEIGHT
OIT	OPERATOR INTERFACE
PLC	PROGRAMMABLE LOGIC CONTROLLER
PSIG	POUND PER SQUARE INCH GAUGE
PVC	POLYVINYL CHLORIDE
QTY	QUANTITY
REF	REFERENCE
SHT	SHEET
SS	STAINLESS STEEL
TEFC	TOTALLY ENCLOSED FAN COOLED
TP	TIE POINT
TFE	TEFLON
TOC	TOP OF CONCRETE
TYP	TYPICAL
WT	WEIGHT
XMTR	TRANSMITTER
VAC	VOLTS AC
VDC	VOLTS DC

COLORS

BLK	BLACK
BLU	BLUE
BRN	BROWN
GRN	GREEN
GRY	GREY
ORG	ORANGE
VIO	VIOLET
WHT	WHITE
YEL	YELLOW

SYMBOY KEY

AE	ANALYZING ELEMENT
ASH	ALARM SWITCH HIGH
CT	CONTACTOR
FC	FLOW CONTROLLER
FCV	FLOW CONTROL VALVE
FE	FLOW ELEMENT
FIV	FLOW INDICATION W/VALVE
FGI	FLOW INDICATION
FT	FLOW TRANSMITTER
JIT	POWER INDICATOR
LS	LEVEL SWITCH
LSL	LEVEL SWITCH LOW
LSH	LEVEL SWITCH HIGH
OIT	OPERATOR INTERFACE
PCV	PRESSURE CONTROL VALVE
PI	PRESSURE INDICATION
PSH	PRESSURE SWITCH HIGH
PSL	PRESSURE SWITCH LOW
SC	SPEED CONTROL
TI	TEMPERATURE INDICATION
XV	SOLENOID TAG
XS	EQUIPMENT POWER SWITCH
TP	TIE POINT

PIPING/VALVE SYMBOLS

TIE POINT, REDUCER, FLANGE JOINT, HOSE, MATL SPEC BREAK, EXP JOINT, SCREW JOINT, CAP/PLUG, STRAINER, REGULATOR

GATE, GLOBE, BALL, PLUG, CHECK, 3-WAY, BUTTERFLY, RELIEF, NEEDLE, ELEC. ACTUATED VALVE, PNEU. ACTUATED VALVE

ELECTRICAL SYMBOLS

NC, NO, PUSH BUTTON, EARTH GROUND, CHASSIS GROUND, PILOT LIGHT, FUSE, HORN, TRANSFORMER, OVERLOAD RELAY, RELAY CONTACT, CIRCUIT BREAKER, MOTOR, RELAY, TERMINAL BLOCK, DISCRETE COMPUTER I/O, ANALOG I/O

PRESSURE SWITCHES

DIFFERENTIAL PRESSURE, OPEN ON INCR. PRESSURE, OPEN ON DECR. PRESSURE

LEVEL SWITCHES

OPEN ON INCR. LEVEL, OPEN ON DECR. LEVEL

TEMPERATURE SWITCHES

OPEN ON INCR. TEMPERATURE, OPEN ON DECR. TEMPERATURE

BILL OF MATERIALS

ITEM	DESCRIPTION	PART #	SUPPLIER	QTY

INSTRUMENT IDENTIFICATION

CODE	VARIABLE	FUNCTION
A	ANALYSIS	ALARM
B	BURNER FLAME	GRAPHIC DISPLAY
C	CONDUCTIVITY	CONTROLLER (CLOSED)
D	DENSITY	(DIFFERENTIAL)
E	VOLTAGE	ELEMENT
F	FLOW	(RATIO)
G	THICKNESS GAUGING	GLASS
H	HAND ACTUATED	(HIGH)
I	CURRENT/INDICATOR	INDICATOR
J	POWER	(SCAN)
K	TIME OR SCHEDULE	CONTROL STATION
L	LEVEL	LIGHT (LOW)
M	MOISTURE	(MIDDLE)
N	NEUTRALITY (PH)	
O	OXYGEN	ORIFICE (OPEN)
P	PRESSURE	TEST POINT
Q	HEAT ENERGY	(TOTALIZE)
R	RADIOACTIVITY	RECORDER
S	SPEED	(SAFETY) SWITCH
T	TEMPERATURE	TRANSMITTER
U	MULTIVARIABLE	MULTIFUNCTION
V	VISCOSITY	VALVE
W	WEIGHT	WELL
X	USER DEFINED	IGNITOR, USER DEFINED
Y		TRANSDUCER OR COMPUTER
Z	POSITION	FINAL CONTROL ELEMENT

INSTRUMENT SYMBOLS

THERMOWELL, ORIFICE METER, VENTURI METER, ROTAMETER, TURBINE METER, MAGNETIC METER, CENTRIFICAL PUMP, METERING PUMP, FILTER, SOLENOID, PNUEMATIC, HEAT EXCHANGER, LOCAL, PANEL, BACK PANEL

REV	DESCRIPTION	NAME	DATE
1	PER CUSTOMER COMMENTS, JULY 23, 2009	08/25/09	pjk
0	FOR CUSTOMER APPROVAL	07/20/09	pjk

REVISION HISTORY

APPLIED PROCESS TECHNOLOGY

CLIENT: H&S ENVORONMENTAL

PROJECT: J1136 LOCATION: BRUNSWICK, ME

TITLE: DEFINITIONS

DRAWN	PJK	07/12/09
DESIGN	PJK	07/12/09
CHECKED	CL	07/17/09
APPROVED		
APPROVED		

SIZE A DRAWING NO. J1136T010 REV 1

SCALE: NONE FILE J1136T010 SHEET 1 OF 1

PROPRIETARY

THIS DOCUMENT CONTAINS PROPRIETARY INFORMATION OF APPLIED PROCESS TECHNOLOGY, INC. (APT). IT IS SUBMITTED IN CONFIDENCE AND SHALL NOT BE DISCLOSED TO REPRODUCED, DISCLOSED OR DISCUSSED OR TO UNAUTHORIZED PERSONS WITHOUT PRIOR AND SPECIFIC AUTHORIZATION. DISCLOSURE OF THIS DOCUMENT TO THE UNITED ORGANIZATIONS OF APPLIED PROCESS TECHNOLOGY, INC. IS EXPRESSLY PROHIBITED.

BILL OF MATERIALS

ITEM	DESCRIPTION	PART #	SUPPLIER	QTY
	OxPSA-0.6 OXYGEN GENERATOR 5 Hp, oil free compressor PSA w/ receiver tank			
	P-91 FEED PUMP 3 HP, 75 GPM @ 45 psi			
	T-800 PEROXIDE TANK, 20 GAL			
	X-401 OZONE GENERATOR 1 EA, ASTEX 8403 8.5 LB @ 10%WT @ 35 PSIG & 93% O2			
	R-200 REACTOR, 10 EACH 3"ø SCH80 PVC			
	S-200 SEPARATOR, 12"ø X 6' LONG, SCH10 304LSS			
	X-601 OZONE DESTRUCT, 150W, 304SS, MnO2 CATALYST			

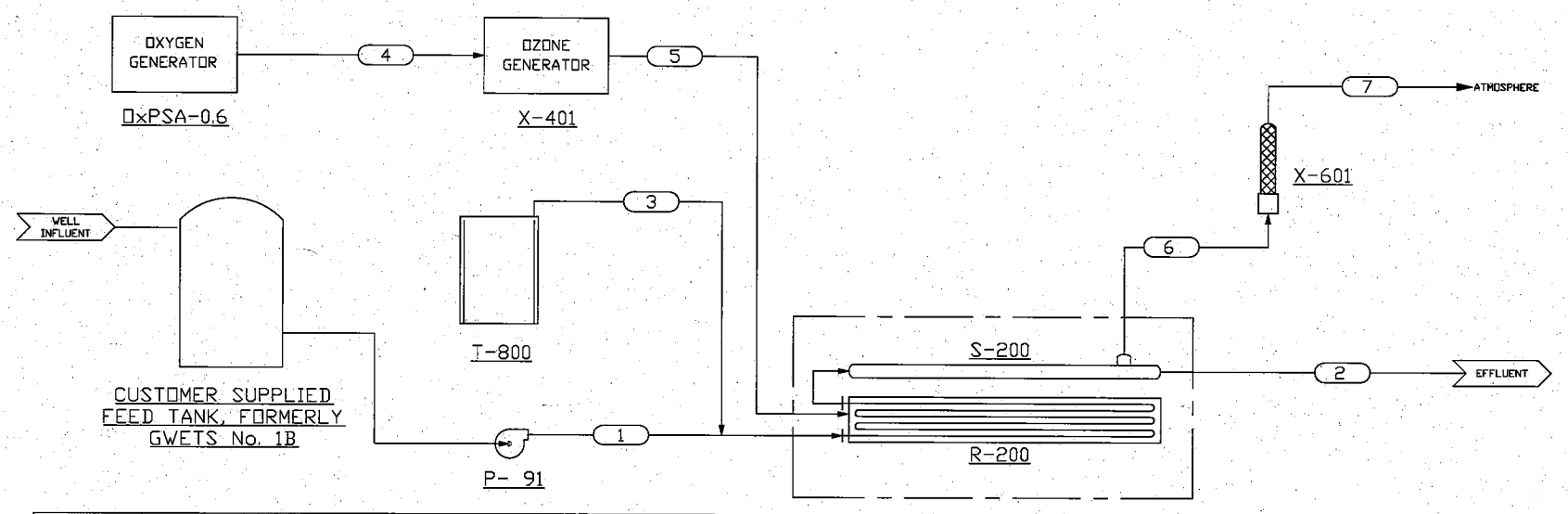

Stream No.		1	2	3	4	5	6	7
Component	Units	System Influent	System Effluent	Hydrogen Peroxide	Oxygen	Ozone	Vent	Exhaust
Flow Rate	gpm	75 (max)	76	-	-	-	-	-
	gpd	-	-	1.7	-	-	-	-
	ml/min	-	-	4.5	-	-	-	-
	scfm	-	-	-	0.4	0.4	0.4	0.4
	scfd	-	-	-	576	576	576	576
	slpm	-	-	-	12	12	12	12
1,4-Dioxane	ppb	200	<10.0	-	-	-	-	-
COD	ppm	<5	<5	-	-	-	-	-
Temperature	deg F	-	-	ambient	70	70	70	120
Pressure	psig	40	<10	70	80	30	atm	atm
Specific Gravity	unitless	1	1	1.13	-	-	-	-
Viscosity	cP	1	1	-	-	-	-	-
Hydrogen Peroxide	% wt in H2O	-	-	10	-	-	-	-
Ozone	% wt in O2	-	-	-	-	10	-	-
Oxygen	% vol	-	-	-	99.9%	-	-	-
Nitrogen	% vol	-	-	-	-	-	-	-
Hydrogen Peroxide	mg/l	-	-	2.5	-	-	-	-
Ozone	mg/l	-	-	-	-	5	-	-
	lbs/day	-	-	-	-	5.4	-	<0.002

REV	DESCRIPTION	NAME	DATE
1	PER CUSTOMER COMMENTS, JULY 23, 2009	08/25/09	pjk
0	FOR COSTUMER APPROVAL	07/20/09	pjk

REVISION HISTORY

APPLIED PROCESS TECHNOLOGY

CLIENT: H&S ENVIRONMENTAL

PROJECT: J1136

LOCATION: BRUNSWICK, ME

TITLE: PROCESS FLOW DIAGRAM REACTION SYSTEM

DRAWN	SF	12/18/05
DESIGN	pjk	07/16/09
CHECKED	pjk	07/10/09
APPROVED	CL	
APPROVED		
NEXT ASSEMBLY:		

SIZE D | DRAWING NO. J1136P010 | REV 1

SCALE: NONE | FILE: J1136P010 | SHEET 1 OF 1

PROPRIETARY

THIS DOCUMENT CONTAINS PROPRIETARY INFORMATION OF APPLIED PROCESS TECHNOLOGY INC., AND ITS RECEIPT OR POSSESSION DOES NOT CONVEY ANY RIGHTS TO REPRODUCE, DISCLOSE ITS CONTENTS OR TO MANUFACTURE, USE OR SELL ANYTHING IT MAY DESCRIBE. REPRODUCTION, DISCLOSURE OR USE WITHOUT THE WRITTEN AUTHORIZATION OF APPLIED PROCESS TECHNOLOGY INC., IS EXPRESSLY FORBIDDEN.

BILL OF MATERIALS

ITEM	DESCRIPTION	PART #	SUPPLIER	QTY

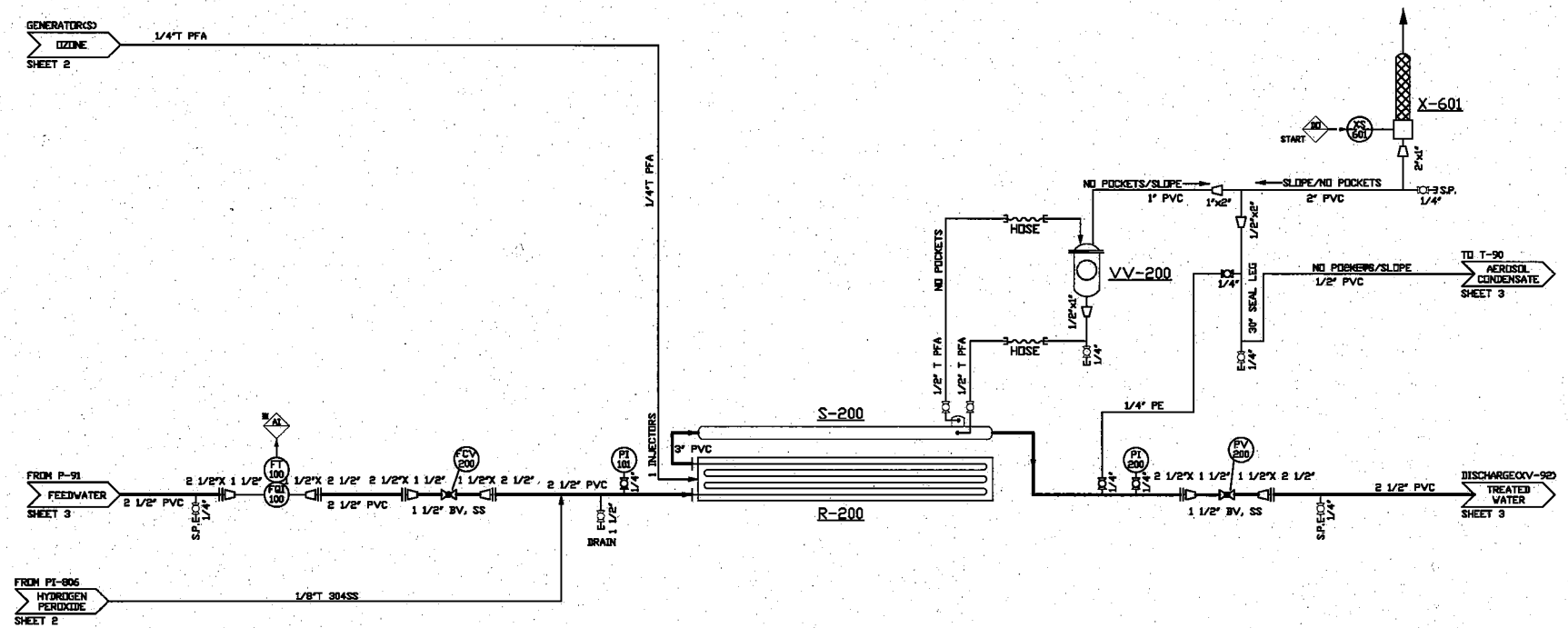

REV	DESCRIPTION	NAME	DATE
1	PER CUSTOMER COMMENTS, JULY 23, 2009	PJK	08/25/09
0	FOR COSTUMER APPROVAL	PJK	07/20/09

REVISION HISTORY

APPLIED PROCESS TECHNOLOGY

CLIENT: H&S ENVIRONMENTAL

PROJECT: J1136

LOCATION: BRUNSWICK, ME

TITLE: PIPING & INSTRUMENT DRAWING REACTION SYSTEM

DRAWN	SF	02/10/05
DESIGN	PJK	07/16/09
CHECKED	CLM	07/17/09
APPROVED		
APPROVED		
NEXT ASSEMBLY:		

SIZE D | DRAWING NO. J1136P001 | REV 1

SCALE: None | FILE:J1136P001 | SHEET 1 OF 4

PROPRIETARY

THIS DOCUMENT CONTAINS PROPRIETARY INFORMATION OF APPLIED PROCESS TECHNOLOGY INC. AND IS SUBJECT TO PROVISIONS UNDER NDA WHICH CONTROL ANY RIGHTS TO POSSESSION, DISCLOSURE OR USE OR SALE, ANYWHERE IN ANY MANNER. REPRODUCTION, DISCLOSURE OR USE WITHOUT THE WRITTEN AUTHORIZATION OF APPLIED PROCESS TECHNOLOGY INC. IS EXPRESSLY PROHIBITED.

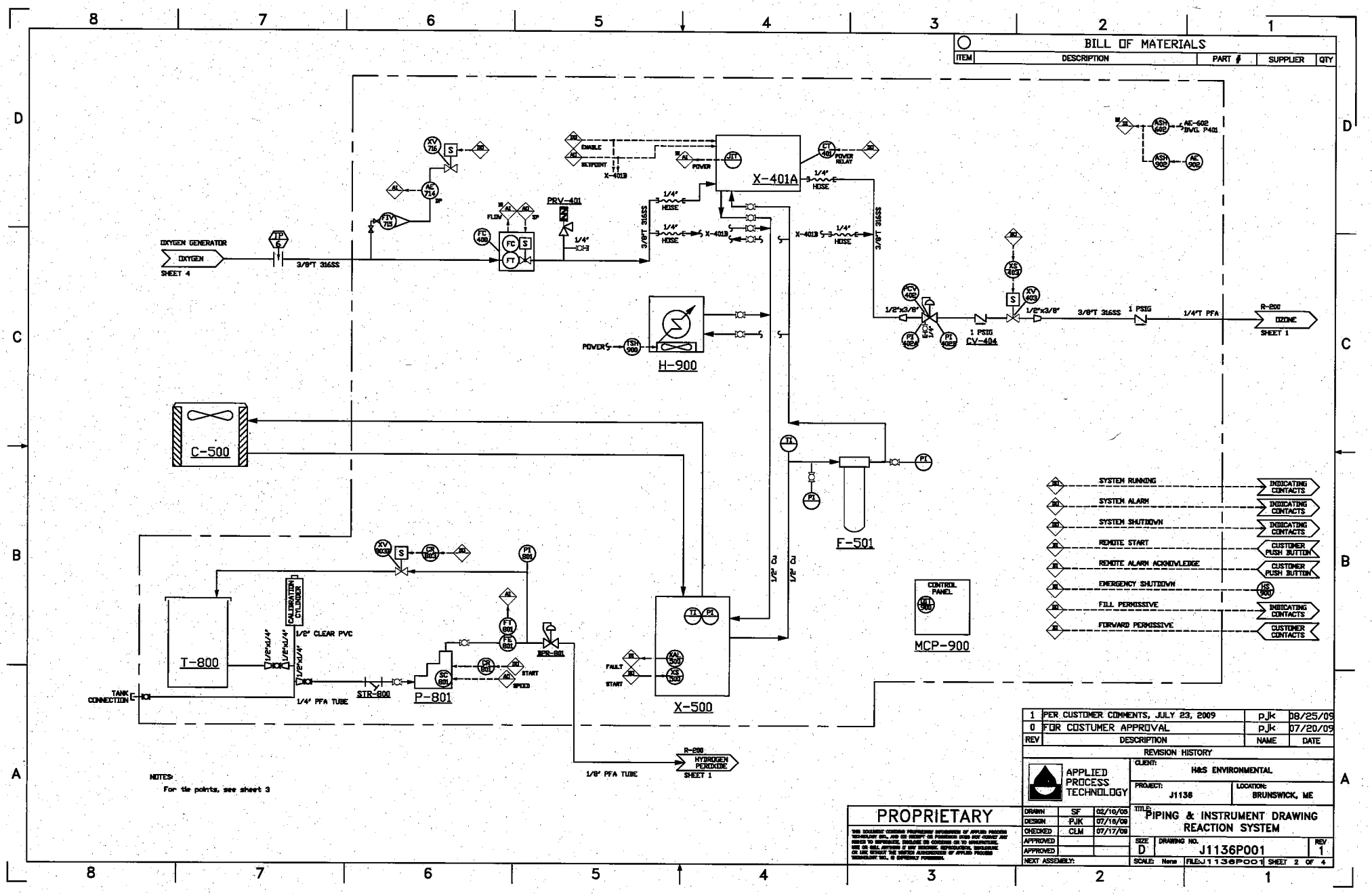

BILL OF MATERIALS

ITEM	DESCRIPTION	PART #	SUPPLIER	QTY

REV	DESCRIPTION	NAME	DATE
1	PER CUSTOMER COMMENTS, JULY 23, 2009	PJK	08/25/09
0	FOR COSTUMER APPROVAL	PJK	07/20/09

REVISION HISTORY

APPLIED PROCESS TECHNOLOGY

CLIENT: H&S ENVIRONMENTAL

PROJECT: J1136

LOCATION: BRUNSWICK, ME

TITLE: PIPING & INSTRUMENT DRAWING REACTION SYSTEM

DRAWN	SF	02/10/05
DESIGN	PJK	07/16/09
CHECKED	CLM	07/17/09
APPROVED		
APPROVED		
NEXT ASSEMBLY:		

SIZE D | DRAWING NO. J1136P001 | REV 1

SCALE: None | FILE: J1136P001 | SHEET 2 OF 4

PROPRIETARY

THIS DOCUMENT CONTAINS PROPRIETARY INFORMATION OF APPLIED PROCESS TECHNOLOGY, INC. AND IS RECEIPT OF PERSONS WHO MAY CONVEY ANY RIGHTS TO REPRODUCE, DISCLOSE OR CONVERT OR TO MANUFACTURE, USE OR SELL ANYTHING IT MAY DESCRIBE, REPRODUCTION, DISCLOSURE OR USE WITHOUT THE WRITTEN AUTHORIZATION OF APPLIED PROCESS TECHNOLOGY, INC. IS EXPRESSLY FORBIDDEN.

BILL OF MATERIALS				
ITEM	DESCRIPTION	PART #	SUPPLIER	QTY

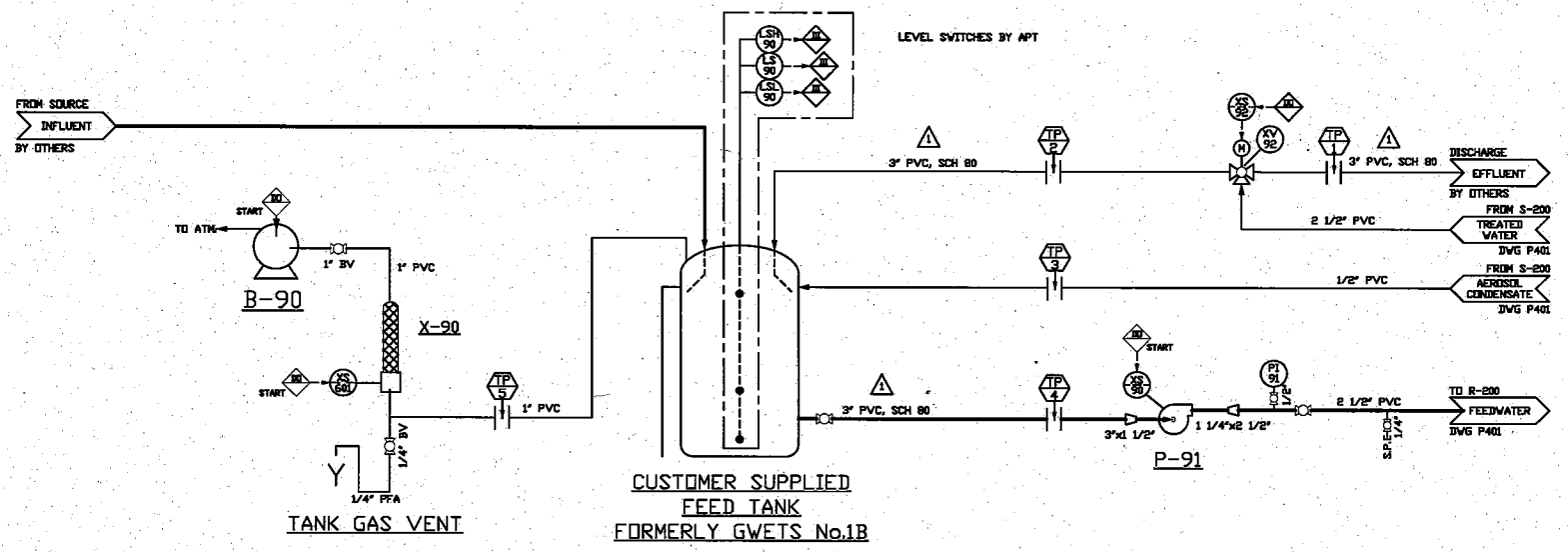

TIE POINT SCHEDULE				
TP#	PROCESS	SIZE	CONNECTION TYPE	MATERIAL
TP-1	SYSTEM DISCHARGE	3"	MALE NPT	PVC SCH 80
TP-2	RECYCLE LINE	3"	MALE NPT	PVC SCH 80
TP-3	AEROSOIL CONDENSATE	1/2"	MALE NPT	PVC SCH 80
TP-4	FEED LINE	3"	MALE NPT	PVC SCH 80
TP-5	TANK VENT	1"	MALE NPT	PVC SCH 80
TP-6	OXYGEN FEED	3/8"	Swaglok	316SS
TP-7	OXYGEN FEED	3/8"	Swaglok	316SS

NOTES:

1. CUSTOMER TO SUPPLY FEED TANK, AND ALL PIPING TO AND FROM FEED TANK
2. APT TO SUPPLY AND INSTALL LEVEL FLOATS (LSH90, LS90, LSL90) IN FEED TANK
3. ALL PIPING TO BE SCHEDULE 80 PVC PIPING, EXCEPT AS NOTED

REV	DESCRIPTION	NAME	DATE
1	PER CUSTOMER COMMENTS, JULY 23, 2009	PJK	08/25/09
0	FOR COSTUMER APPROVAL	PJK	07/20/09

REVISION HISTORY

APPLIED PROCESS TECHNOLOGY

CLIENT: H&S ENVIRONMENTAL

PROJECT: J1136

LOCATION: BRUNSWICK, ME

TITLE: PIPING & INSTRUMENT DRAWING REACTION SYSTEM

DRAWN	SF	02/10/05
DESIGN	PJK	07/16/09
CHECKED	CLM	07/17/09
APPROVED		
APPROVED		
NEXT ASSEMBLY:		

SIZE: D | DRAWING NO. J1136P001 | REV 1

SCALE: None | FILE: J1136P001 | SHEET 3 OF 4

PROPRIETARY

THIS DOCUMENT CONTAINS PROPRIETARY INFORMATION OF APPLIED PROCESS TECHNOLOGY INC. AND IS SUBJECT TO RESTRICTIONS THAT MAY CONVEY ANY RIGHTS TO REPRODUCE, DISCLOSE TO CONSULTANTS OR TO MANUFACTURE, USE OR SELL, REPAIR OR ANY REASONS. REPRODUCTION, DISCLOSURE OR USE WITHOUT THE WRITTEN AUTHORIZATION OF APPLIED PROCESS TECHNOLOGY INC. IS EXPRESSLY FORBIDDEN.

BILL OF MATERIALS				
ITEM	DESCRIPTION	PART #	SUPPLIER	QTY

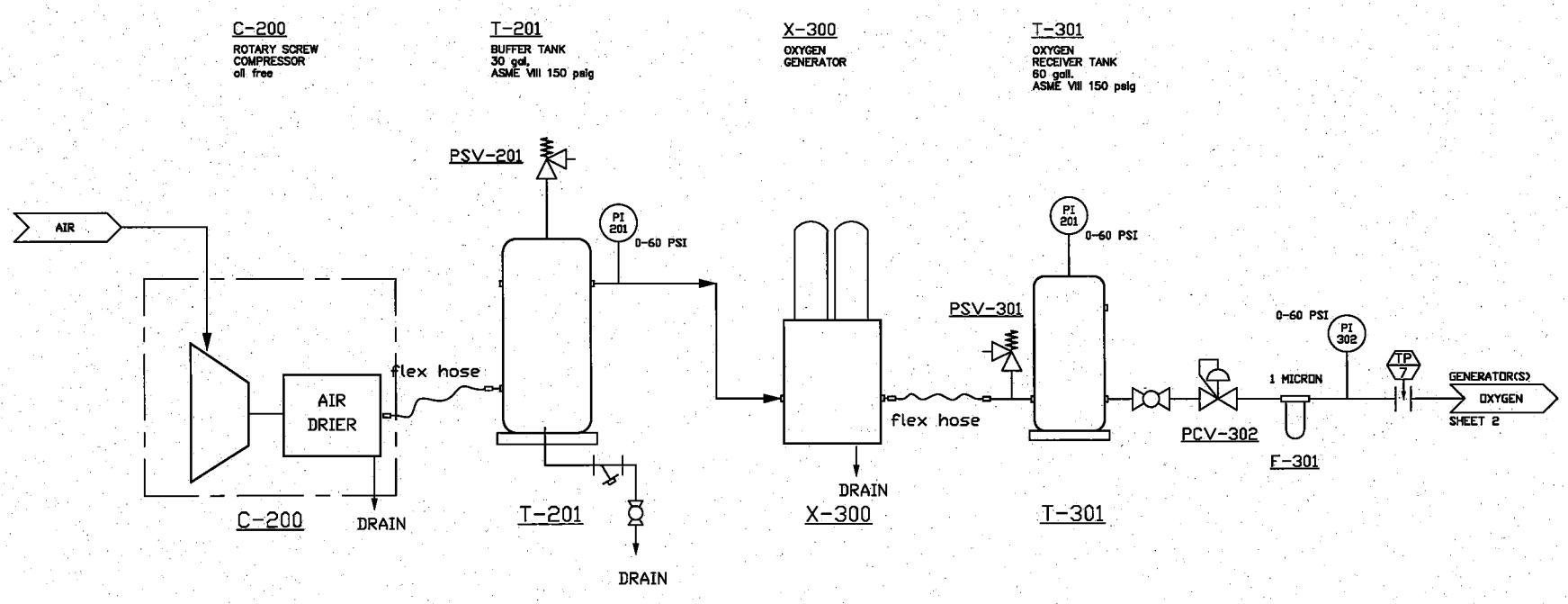

NOTES:

For tie points, see sheet 3

REV	DESCRIPTION	NAME	DATE
1	PER CUSTOMER COMMENTS, JULY 23, 2009	PJK	08/25/09
0	FOR COSTUMER APPROVAL	PJK	07/20/09

REVISION HISTORY

APPLIED PROCESS TECHNOLOGY

CLIENT: H&S ENVIRONMENTAL

PROJECT: J1136

LOCATION: BRUNSWICK, ME

TITLE: PIPING & INSTRUMENT DRAWING REACTION SYSTEM

DRAWN	SF	02/10/05
DESIGN	PJK	07/16/09
CHECKED	CLM	07/17/09
APPROVED		
APPROVED		
NEXT ASSEMBLY:		

SIZE: D | DRAWING NO.: J1136P001 | REV: 1

SCALE: None | FILE: J1136P001 | SHEET 4 OF 4

PROPRIETARY

THIS DOCUMENT CONTAINS PROPRIETARY INFORMATION OF APPLIED PROCESS TECHNOLOGY INC. AND NO RECEIPT OR POSSESSION HERE FOR CONVEY ANY RIGHTS TO REPRODUCE, DISCLOSE ITS CONTENTS OR TO MANUFACTURE, USE OR SELL ANYTHING IT MAY DESCRIBE. REPRODUCTION, DISCLOSURE OR USE WITHOUT THE WRITTEN AUTHORIZATION OF APPLIED PROCESS TECHNOLOGY INC. IS EXPRESSLY PROHIBITED.

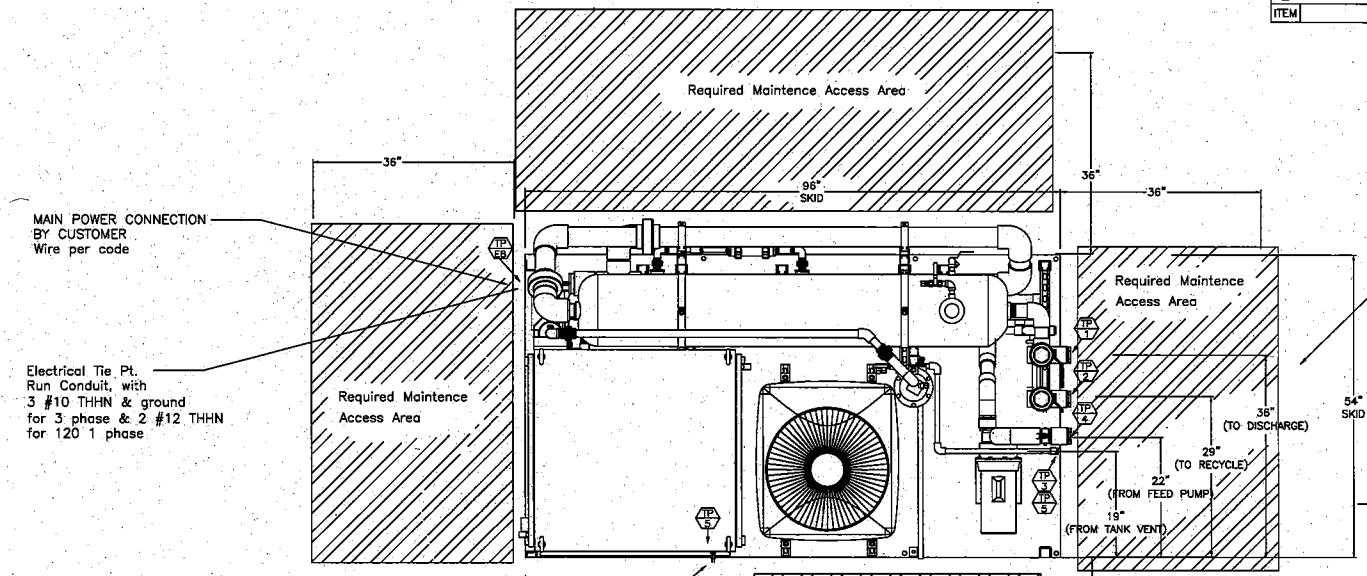

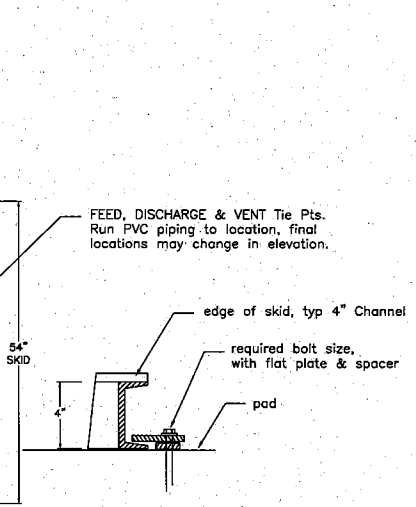

HOLD-DOWN

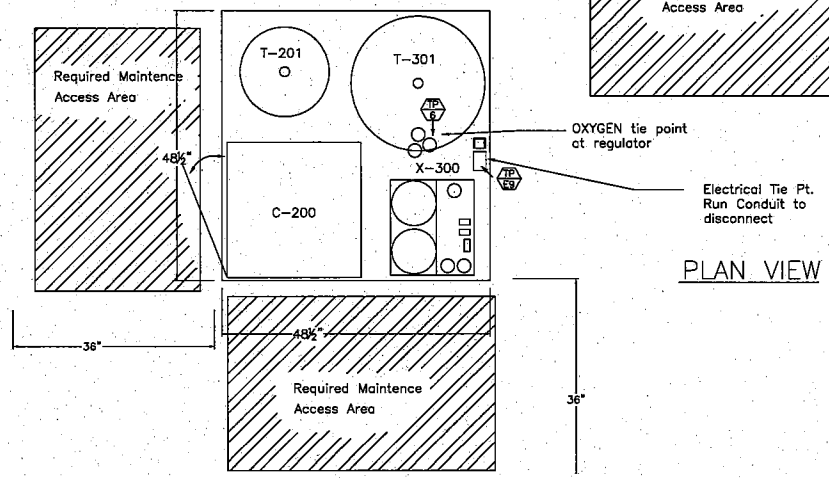

PLAN VIEW

TIE POINT SCHEDULE				
TP#	PROCESS	SIZE	CONNECTION TYPE	MATERIAL
TP-1	SYSTEM DISCHARGE	3"	MALE NPT	PVC SCH 80
TP-2	RECYCLE LINE	3"	MALE NPT	PVC SCH 80
TP-3	AEROSOL CONDENSATE	1/2"	MALE NPT	PVC SCH 80
TP-4	FEED LINE	3"	MALE NPT	PVC SCH 80
TP-5	TANK VENT	1"	MALE NPT	PVC SCH 80
TP-6	OXYGEN FEED	3/8"	Swagelok	316SS
TP-7	OXYGEN FEED	3/8"	Swagelok	316SS
TP-E8	ELECTRICAL	1"	CONDUIT	PVC
	ELECTRICAL, MAIN POWER	per code	CONDUIT	PVC
TP-E9	ELECTRICAL	1"	CONDUIT	PVC

BILL OF MATERIALS				
ITEM	DESCRIPTION	PART #	SUPPLIER	QTY

NOTES:
1.

REVISION HISTORY			
1	PER CUSTOMER COMMENTS, JULY 23, 2009	pjk	08/25/09
0	FOR CUSTOMER APPROVAL	pjk	07/20/09
REV	DESCRIPTION	NAME	DATE

APPLIED PROCESS TECHNOLOGY

CLIENT: H&S ENVIRONMENTAL
PROJECT: J1136
LOCATION: BRUNSWICK, ME

TITLE: FACILITY DRAWING HIPOX CABINET UNIT

DRAWN:	LT	02/10/05
DESIGN	PJK	07/16/09
CHECKED	CLM	07/17/09
APPROVED		
APPROVED		
NEXT ASSEMBLY:		

SIZE D | DRAWING NO. 600-001-00 | REV 1
SCALE: None | FILE:J1136-F600 | SHEET 1 OF 3

PROPRIETARY
THIS DOCUMENT CONTAINS PROPRIETARY INFORMATION OF APPLIED PROCESS TECHNOLOGY INC., AND ITS RECEIPT OR POSSESSION DOES NOT CONVEY ANY RIGHTS TO REPRODUCE, DISCLOSE ITS CONTENTS OR TO MANUFACTURE, USE OR SELL ANYTHING IT MAY DESCRIBE. REPRODUCTION, DISCLOSURE OR USE WITHOUT THE WRITTEN AUTHORIZATION OF APPLIED PROCESS TECHNOLOGY INC., IS EXPRESSLY FORBIDDEN.

BILL OF MATERIALS				
ITEM	DESCRIPTION	PART #	SUPPLIER	QTY

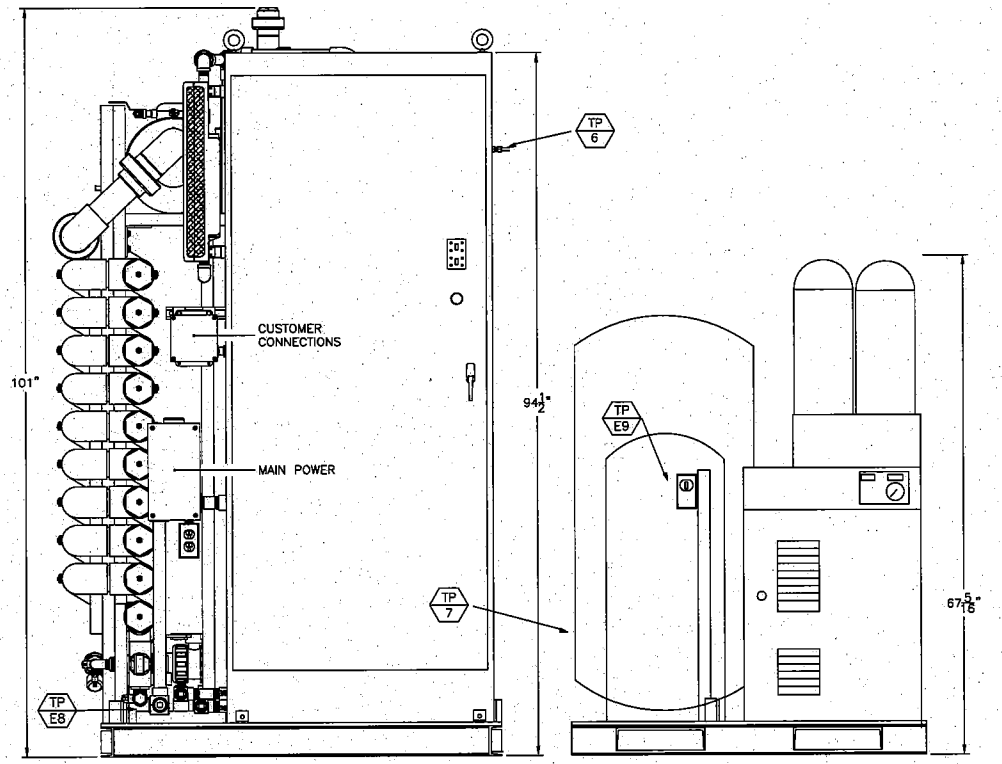

RIGHTSIDE VIEW

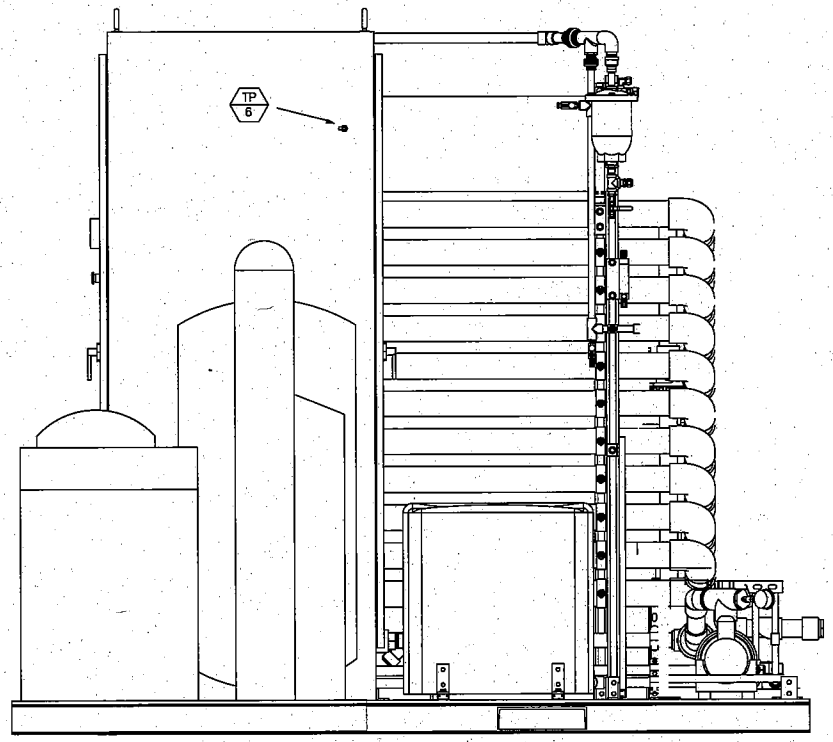

FRONT VIEW

REV	DESCRIPTION	NAME	DATE
1	PER CUSTOMER COMMENTS, JULY 23, 2009	pjk	08/25/09
0	FOR CUSTOMER APPROVAL	pjk	07/20/09

REVISION HISTORY

APPLIED PROCESS TECHNOLOGY

CLIENT: H&S ENVIRONMENTAL

PROJECT: J1136

LOCATION: BRUNSWICK, ME

TITLE: FACILITY DRAWING HIPOX CABINET UNIT

DRAWN	LT	02/10/05
DESIGN	PJK	07/16/09
CHECKED	CLM	07/17/09
APPROVED		
APPROVED		
NEXT ASSEMBLY:		

SIZE D | DRAWING NO. 600-001-00 | REV 1

SCALE: None | FILE: J1136-F600 | SHEET 2 OF 3

PROPRIETARY

THIS DOCUMENT CONTAINS PROPRIETARY INFORMATION OF APPLIED PROCESS TECHNOLOGY INC., AND ITS RECEIPT OR POSSESSION DOES NOT CONVEY ANY RIGHTS TO REPRODUCE, DISCLOSE ITS CONTENTS OR TO MANUFACTURE, USE OR SELL ANYTHING IT MAY DESCRIBE. REPRODUCTION, DISCLOSURE OR USE WITHOUT THE WRITTEN AUTHORIZATION OF APPLIED PROCESS TECHNOLOGY INC., IS EXPRESSLY FORBIDDEN.

BILL OF MATERIALS				
ITEM	DESCRIPTION	PART #	SUPPLIER	QTY

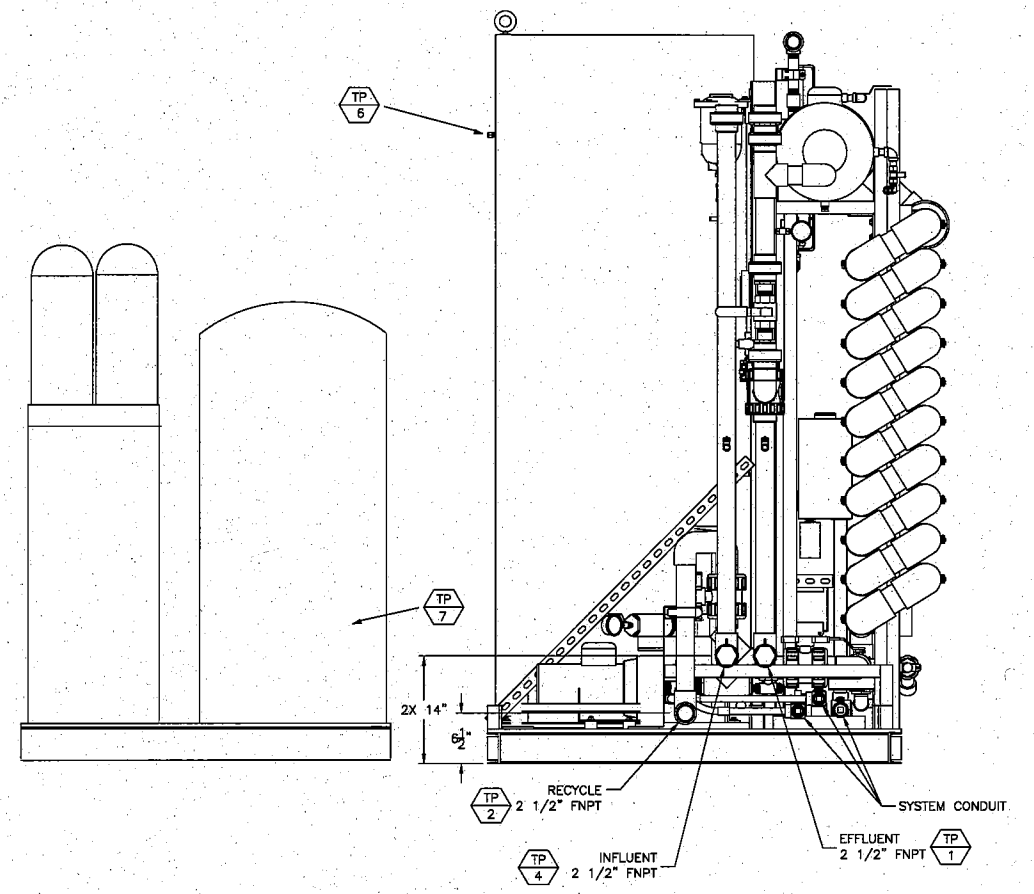

LEFTSIDE VIEW

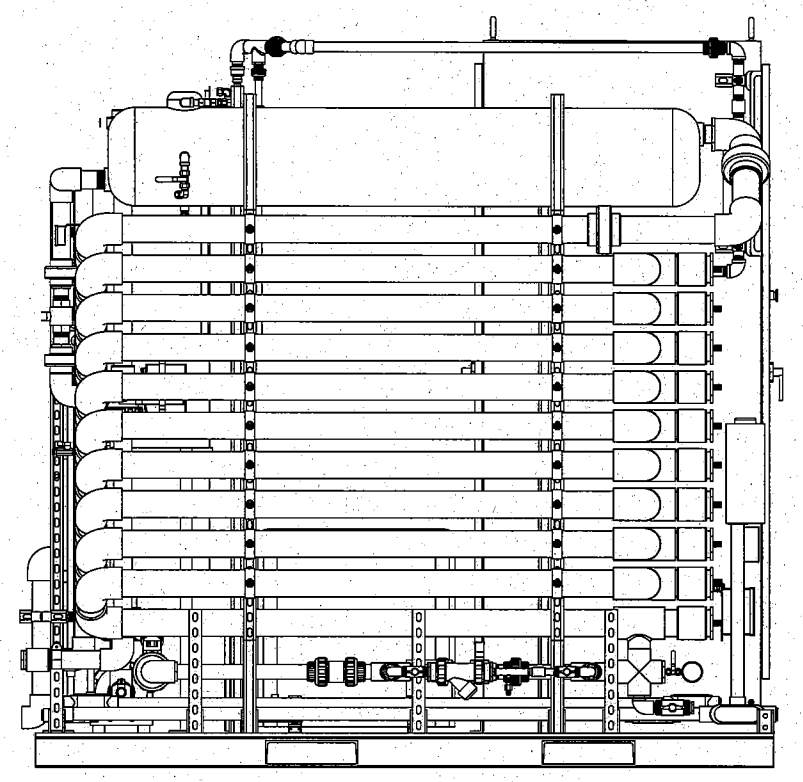

REAR VIEW

REV	DESCRIPTION	NAME	DATE
1	PER CUSTOMER COMMENTS, JULY 23, 2009	pjk	08/25/09
0	FOR CUSTOMER APPROVAL	pjk	07/20/09

REVISION HISTORY

APPLIED PROCESS TECHNOLOGY

CLIENT: H&S ENVIRONMENTAL

PROJECT: J1136

LOCATION: BRUNSWICK, ME

TITLE: FACILITY DRAWING HIPOX CABINET UNIT

DRAWN	LT	02/10/05
DESIGN	PJK	07/16/09
CHECKED	CLM	07/17/09
APPROVED		
APPROVED		
NEXT ASSEMBLY:		

SIZE D | DRAWING NO. 600-001-00 | REV 1

SCALE: None | FILE-J1136-F600 | SHEET 3 OF 3

PROPRIETARY

THIS DOCUMENT CONTAINS PROPRIETARY INFORMATION OF APPLIED PROCESS TECHNOLOGY INC., AND ITS RECEIPT OR POSSESSION DOES NOT CONVEY ANY RIGHTS TO REPRODUCE, DISCLOSE ITS CONTENTS OR TO MANUFACTURE, USE OR SELL ANYTHING IT MAY DESCRIBE. REPRODUCTION, DISCLOSURE OR USE WITHOUT THE WRITTEN AUTHORIZATION OF APPLIED PROCESS TECHNOLOGY INC., IS EXPRESSLY FORBIDDEN.

Applied

J1136 ELECTRICAL LOAD
LOAD FOR 208VAC/3ph/60Hz SERVICE

RACK OZONE DEMAND: 18 (Pounds/day)

No.	Item		Tag	Platform	Switched	Volts	Phase	Amp Load Balance RMS	L1	L2	L3	Load HP	kWatts	PF	kVA
STANDARD FEATURES															
○	AX-8407 Generator, (18.5 ppd)		X-401	Skid	Y	208	3	0.0	0.0	0.0	0.0	0.0	0.0	0.98	0.00
○	AX-8406 Generator, (11.64 ppd)		X-401	Skid	Y	208	3	0.0	0.0	0.0	0.0	0.0	0.0	0.98	0.00
◉	AX-8403 Generator, (8.5 ppd)		X-401	Skid	Y	208	3	20.8	20.8	20.8	20.8	9.8	7.3	0.98	7.48
○	AX-8402 Generator, (6.6 ppd)		X-401	Skid	Y	208	1	0.0	0.0	0.0	0.0	0.0	0.0	0.98	0.00
2	Control Power		MCP-900	Skid	N	120	1	5.8	5.8		0.0	0.88	0.66	0.95	0.69
3	Metering Pump(s)	1	P-801	Skid	Y	120	1	1.0		1.0	0.0	0.15	0.11	0.95	0.12
4	Peroxide Flowmeter(s)	1	FT-801	Skid	N	120	1	0.5	0.5		0.0	0.08	0.06	0.95	0.06
5	Ozone Destruct Heater		X-601	Skid	Y	120	1	1.3		1.3	0.0	0.20	0.15	0.95	0.16
6	Receptacles (12A max)		na	Skid	N	120	1	12.0			12.0	1.83	1.37	0.95	1.44
7	Cooling Fan		F-950	Skid	N	120	1	0.0		0.0	0.0	0.00	0.00	0.70	0.00
OPTIONAL FEATURES						STANDARD 120/208-VAC LOAD:			27.0	23.1	32.8	13.0	9.7		9.9
☑	Feed Pump		P-90	Skid	Y	208	3	8.9	8.9	8.9	8.9	3.0	2.2	0.70	3.20
☐	Sump Pump		P-100	Skid	Y	208	1	0.0	0.0	0.0	0.0	0.5	0.0	0.70	0.00
☐	Forwarding/Booster Pump		P-201	Skid	Y	208	3	0.0	0.0	0.0	0.0	0.0	0.0	0.70	0.00
☐	Cooling Pump		P-500	Skid	Y	208	1	0.0	0.0	0.0	0.0	0.0	0.0	0.70	0.00
☑	Chiller (rated tons capacity)	2	X-500	Skid	Y	208	3	14.7	9.8	9.8	9.8	5.0	3.7	0.70	5.31
☑	PSA Oxygen Generator		X-700	Skid	N	120	1	1.0	0.0	1.0	0.0	0.0	0.00	0.95	0.00
	PSA Refrig. Air Dryer		D-700	Skid	N	208	3	0.1	0.0	0.0	0.0	0.0	0.0	0.70	0.04
	PSA Air Compressor		C-700	Skid	N	208	3	22.0	22.0	22.0	22.0	5.0	5.5	0.70	7.91
☐	HVAC	0	H-900	Container	N	208	1	0.0		0.0	0.0	0.0	0.0	0.95	0.00
☐	Lighting (12A max)	1	na	Container	N	120	1	0.0	0.0			0.50	0.0	0.95	0.00
☐	Receptacles (12A max)		na	Container	N	120	1	0.0	0.0			1.83	0.0	0.95	0.00
						OPTIONAL 120/208-VAC LOAD:			40.7	41.7	40.7	15.8	11.5		16.5
OPTIONAL INDUSTRIAL GENERATOR						TOTAL 120/208-VAC LOAD:			67.7	64.7	73.4	28.8	21.2		26.4
☐	Ozone Generator (lbs/day)	0	X-450	Skid	N	208	3	0.0	0.0	0.0	0.0	0.00	0.0	0.92	0.00
	Nitrogen Generator		X-452	Skid	N	208	3	0.0	0.0	0.0	0.0	0	0.0	0.70	0.00
☐	Chiller (tons)	0.0	X-500	Skid	N	208	3	0.0	0.0	0.0	0.0	0.0	0.0	0.54	0.00
						OPTIONAL 208-VAC LOAD:			0.0	0.0	0.0	0.0	0.0		0.0

Rack Generators Required = 2.1 (3 operating at 71%) Rack Cooling Required = 4.7 kW (1.3 tons nom./1.9 tons max.)

Service Entrance

Primary Voltage = 208 VAC, 3-phase
Primary Load = 26.4 kVA (208 VAC)
Primary Load = 21.2 kW
Primary Current = 73.3 Amps @ 208 VAC

Stepdown Transformer

Secondary Voltage = 208 VAC 3 Phase
Secondary Load = 26.4 Kva (208 VAC/208 VAC)
Secondary Load = 21.2 kW
Secondary Current = 73 Amps @ 208 VAC

NEC Design factor = 125%
Minimum Transformer Size = 33.0 kVA

NOTES:

1 Max Current @ 208 V - 68 Amps
2

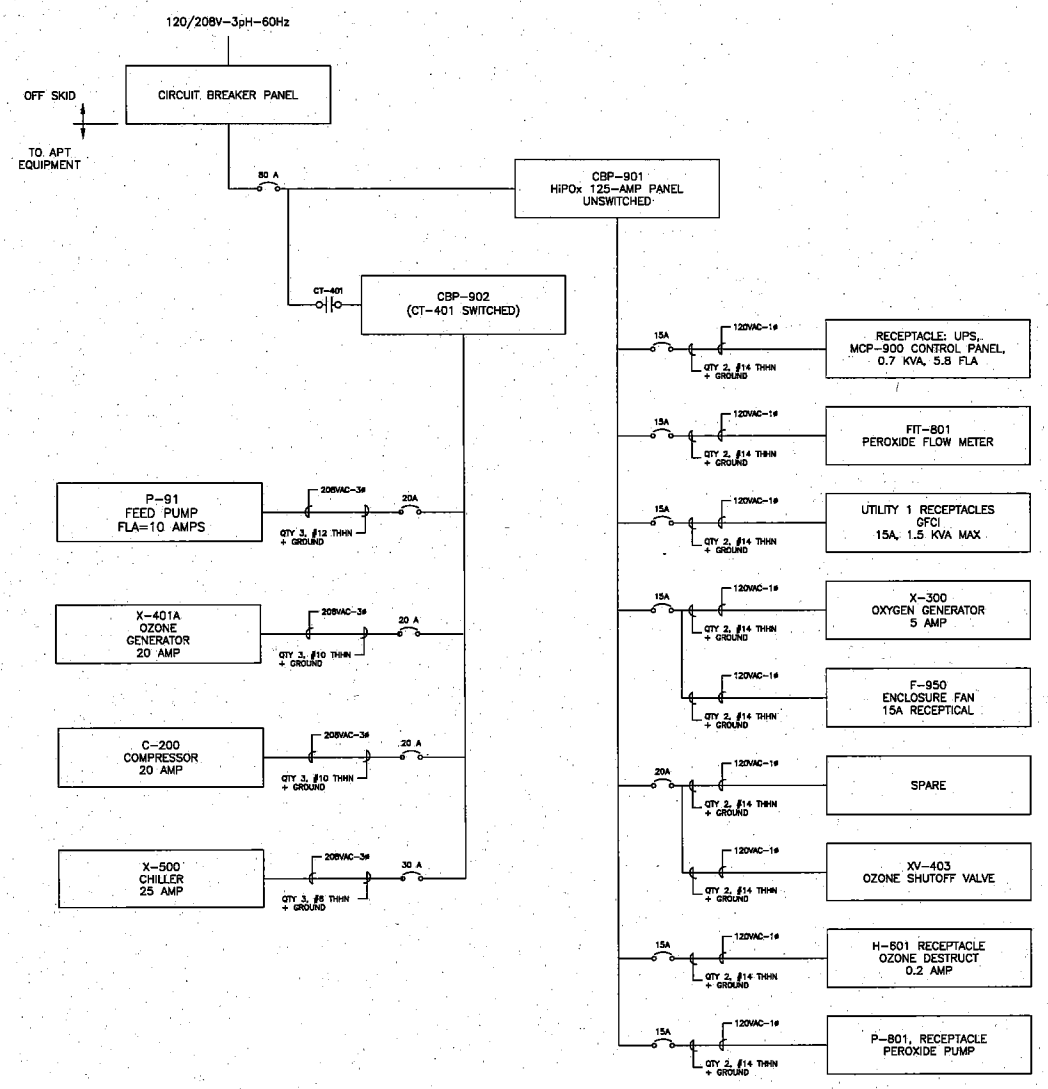

BILL OF MATERIALS

ITEM	DESCRIPTION	PART #	SUPPLIER	QTY

REV	DESCRIPTION	NAME	DATE
1	PER CUSTOMER COMMENTS, JULY 23, 2009	08/25/09	pjk
0	FOR CUSTOMER APPROVAL	07/20/09	pjk

REVISION HISTORY

APPLIED PROCESS TECHNOLOGY

CLIENT: H&S ENVIRONMENTAL

PROJECT: J1136

LOCATION: BRUNSWICK, ME

TITLE: ELECTRICAL ONE LINE

DRAWN	SF	06/09/08
DESIGN	pjk	07/16/09
CHECKED	CL	07/13/09
APPROVED		
APPROVED		
NEXT ASSEMBLY:		

SIZE D | DRAWING NO. J1136E200 | REV 1

SCALE: 1X1 | FILE:J1136E200-RA | SHEET 1 OF 1

PROPRIETARY

THIS DOCUMENT CONTAINS PROPRIETARY INFORMATION OF APPLIED PROCESS TECHNOLOGY INC., AND ITS RECEIPT OR POSSESSION DOES NOT CONVEY ANY RIGHTS TO REPRODUCE, DISCLOSE ITS CONTENTS OR TO MANUFACTURE, USE OR SELL ANYTHING IT MAY DESCRIBE. REPRODUCTION, DISCLOSURE OR USE WITHOUT THE WRITTEN AUTHORIZATION OF APPLIED PROCESS TECHNOLOGY INC., IS EXPRESSLY FORBIDDEN.