N60087.AR.000523
NAS BRUNSWICK
5090.3a

Department of the Navy - Northern Division
Naval Facilities Engineering Command
Lester, Pennsylvania

Volume 2 - Appendix B

Operations and Maintenance Manual

Naval Air Station - Brunswick
Brunswick, Maine

Eastern Plume and Sites 1 & 3

Groundwater Extraction and Treatment System

January, 1996

APPENDIX B

1 Braun Mixers
2 Goulds Sump Pumps
3 Graver Water Lamella Clarifier
4 Grundfos Well Pumps
5 Ingersoll Rand Process Pumps
6 Ingersoll Rand Air Compressor
7 JWI 800 mm Filter Press
8 LMI Chemical Metering Pumps
9 Monarch Greensand Filters
10 Perox-Pure UV Oxidation Unit
11 Wilden Air Diaphragm Pumps
12 ZEKS Compressed Air Drier

BRAWN™ MIXER, INC.

OPERATION & MAINTENANCE INSTRUCTIONS

MIXING SOLUTIONS

NOTES:

1. CLAMP AND PLATE MOUNTS PROVIDE 20° ANGULAR OFF CENTER MOUNTING AND 0 TO 60° VERTICAL ADJUSTMENT.
2. ALL DIMENSIONS IN INCHES.

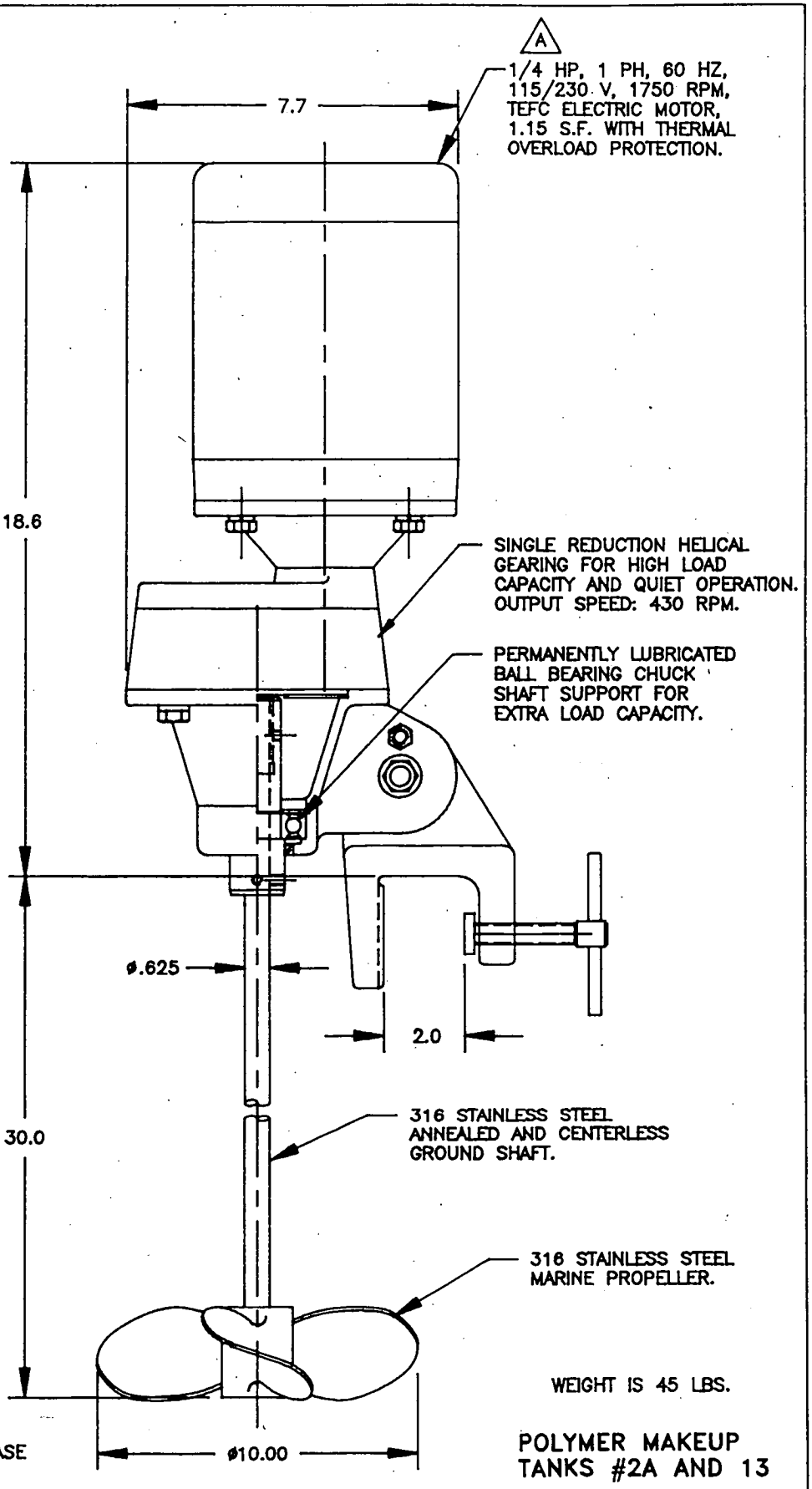

WEIGHT IS 45 LBS.

REV.A 1-27-95 WAS 3 PHASE

POLYMER MAKEUP TANKS #2A AND 13

ALL EQUIPMENT DESIGN AND APPLICATION DATA SHOWN HEREIN IS CONFIDENTIAL AND THE PROPERTY OF BRAWN MIXER, INC. NO USE OR DISCLOSURE THEREOF MAY BE MADE WITHOUT OUR WRITTEN PERMISSION.

FILE NO.94116301 DATE 10-26-94 ©1994

BRAWN™ MIXER, INC.
HOLLAND, MI. 49424
PH. 616-399-5600
FAX 616-399-3084

MIXER MODEL
SG25 GEAR DRIVE
REM SITES NASB, BRUNSWICK, ME
CONTRACT #: N624772-91-C-0034
DIMENSION AND ASSEMBLY DRAWING

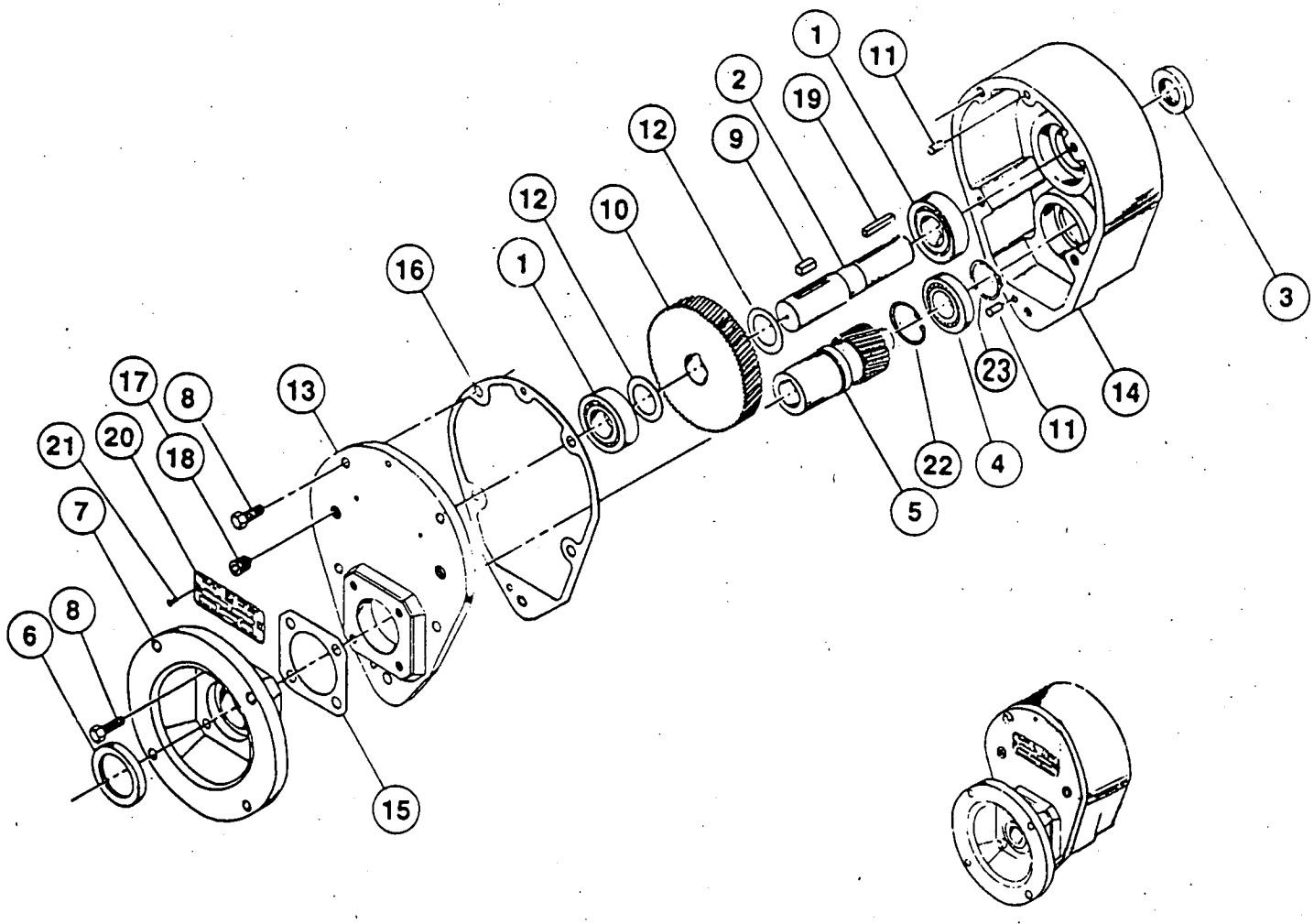

1. Bearing, Output (Ball) — 2 req.
2. Shaft, Output (state output frame size)
3. Seal, Oil (Output)
4. Bearing, Input (Ball)
5. Shaft, Input
6. Seal, Oil (Input)
7. Flange, Motor
8. Screw
9. Key, Gear
10. Gear, Output
11. Pin, Dowel — 2 req.
12. Spacer, Low Speed — 2 req.
13. Cover, Housing
14. Housing, Gear
15. Gasket, Input cover
16. Gasket, Housing
17. Plug, Pipe — 2 req.
18. Plug, Vent
19. Key, Output Shaft
20. Plate, specification
21. Screw, Drive (spec. plate) — 2 req.
22. Ring, Retaining, Internal, Input Shaft
23. Ring, Retaining, External, Input Shaft

12764 Greenly Street ▪ Holland, MI 49424 Phone: 616/399-5600 ▪ Fax: 616/399-3084

CONTENTS

Mixer Installation / Assembly / Dimension Drawings
Customer Service Contact 1
Initial Inspection 1
Safety 2
Installation 2-3
Storage 4
Warranty 5

CUSTOMER SERVICE

Mixer Model # . . . . . **SD/SG-SERIES**
Mixer Serial #_____
Contact:
☛ Customer Service 616/399-5600

You have received a quality engineered and manufactured BRAWN Mixer. We value your business, and we will strive to provide you with the proper service and equipment to meet your needs.

The information contained in this BRAWN Mixer Operator's Manual is designed to assist you in putting your BRAWN Mixer into operation without further delay. **Please read the entire manual before attempting to start y ur mix r.** If you have any further questions or if, by some chance, there are some missing components, contact your BRAWN Mixer Representative or the factory immediately.

We welcome your comments and suggestions concerning any BRAWN Mixer product. Please direct these comments in writing to the National Sales Manager at BRAWN Mixer, Inc., located in Holland, Michigan. To expedite troubleshooting service, please make your initial contact through your BRAWN Mixer Representative. If, for whatever reason, your representative cannot be reached and you have an emergency condition, please call us directly at 616/399-5600 and ask for the Customer Service Department.

Remember, you are backed by your BRAWN Mixer Technical representative and the factory support team. We are here to assist you; let us know how we can be of help.

INITIAL INSPECTION

1. Upon receipt of your BRAWN Mixer, check for possible shipping damage. Report any damage immediately to the carrier and to BRAWN Mixer, Inc.

2. All BRAWN Mixers are shipped with the shaft and impeller(s) disassembled from the drive assembly. In addition, the clamp or cup mount and any mounting hardware for portable mixers are shipped loose.

3. Storage: Mixers should not be stored near vibrating machinery to avoid damage to the bearings. Store mixers as packaged by the factory. For longer storage periods, consult factory. If electric motors have been subjected to humid conditions, check the insulation resistance between phase and mass and between the different phases. The resistance should not be less than 100 megohms. If the resistance is less, please consult the factory. If mixer is stored for more than a month, the condition of the gear and/or lubricant should be checked before the mixer is put in operation (see lubrication instructions).

[CONTINUED] →

SAFETY

The precautions mentioned in this manual are not intended to cover all hazards that may exist in a plant or on this equipment. Using safety mechanisms requires the constant attention of everyone in the vicinity of this (or any) equipment.

A plant and the related equipment are only as safe as the personnel are safety-minded. Proper equipment maintenance and the use of personal safety devices will contribute as much toward safety as will any number of mechanical safety devices.

- To assure maximum safety, optimum performance, and to gain knowledge of the product, it is essential that you or any other operator of this equipment read and understand the contents of this manual before the mixer is operated.
- Do not operate this equipment unless all safety devices are working properly. Check all devices prior to starting the equipment.
- Develop a safety checklist for this equipment and perform regular maintenance to ensure continued and proper operation.
- Disconnect and lock out electrical power before servicing the mixer.
- Do not touch rotating parts.
- Do not make any field changes or modifications without reviewing the change with your BRAWN sales representative or the BRAWN Customer Service Department.

INSTALLATION

[REFER TO ASSEMBLY / DIMENSION DRAWING.]

Refer to the mixer installation / assembly drawing for important mounting structure design, assembly, mounting and dimensional data.

1. For clamp-mount units, install the mixer drive on the mounting structure and secure by tightening the clamp screw.

   - For plate-mount mixers, install the mixer drive on the mounting structure and secure with properly-sized, Grade 5 or better hardware. Torque the hardware as recommended in **TABLE 1**.

2. Install the impeller(s) on the mixer shaft by carefully sliding the impeller hub over the shaft to its proper location and tighten the set screws.

3. Install mixer shaft **[16]** by inserting one end into the chuck driveshaft until it bottoms out **[14]**. (It is recommended that the mixer shaft portion engaged in chuck driveshaft be coated with an anti-seize compound.) Tighten setscrews **[15]** to secure shaft.

TABLE 1: RECOMMENDED TORQUE VALUES

HARDWARE SIZE	TORQUE VALUES (FOOT POUNDS)	
	STANDARD GRADE 2 & 300 SERIES STAINLESS	HIGH STRENGTH GRADES 5 & 8
1/2 — 13	40	65
9/16 — 12	65	90

[CONTINUED] →

INSTALLATION CONTINUED...

BOLT-TIGHTENING RECOMMENDATIONS: Inadequately or improperly tightened hardware can loosen due to vibration during mixer operation. This can result in reduced mixer life or damage to equipment. Recommended torques for tightening all in-tank and mounting hardware are listed in **TABLE 1** [Page 2]. These average torque values should be considered only as guides and not as absolute values.

The following guidelines are based on mixing in vertical cylindrical tanks with flat, dished, or shallow cone bottoms. Mixer installations may vary with tank shape, retention times, starting conditions and other requirements.

1. For liquid levels 0.5 to 1.1 times the tank diameter, a single impeller is suitable.
2. For liquid levels 1.1 to 1.6 times the tank diameter, use dual impellers.
3. Impellers may be located from 0.5 to 2.0 impeller diameters off the tank bottom, with one diameter off bottom being optimum.
4. When dual impellers are necessary, spacing between impellers should be approximately two impeller diameters with gear drives, and four to five impeller diameters with direct drive mixers.
5. Mixer position in tank should be as shown in **FIGURE A** [below] for maximum turnover of liquid.

FIGURE A

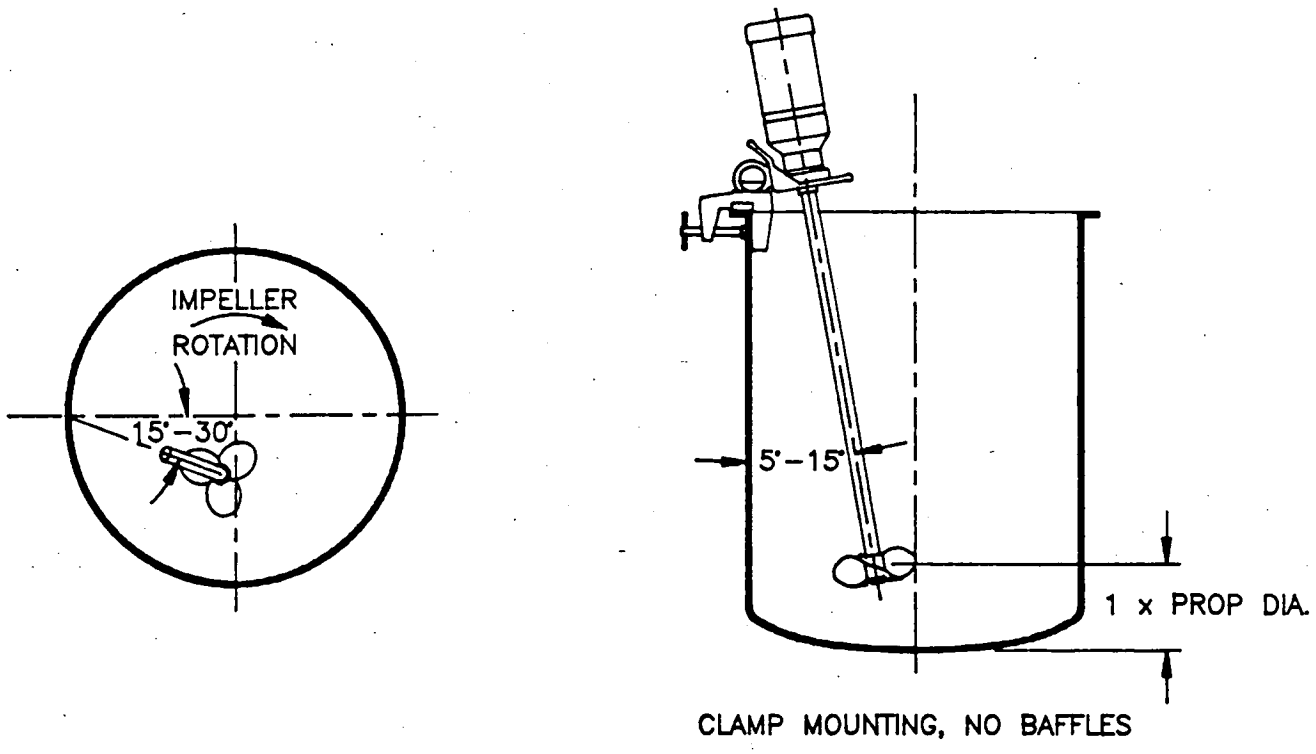

[CONTINUED] →

STORAGE

Units shipped from BRAWN Mixer, Inc. are intended to be used within 30 days after receipt and presumed to be stored indoors in a heated building. If you intend storing units under adverse conditions or for a long period of time, special storage precautions will be necessary.

1. Store in a sheltered area away from chemical vapors or steam.
2. Cover.
3. Do not store in sunlight or near high heat.
4. Spray oil on exposed shafts and seals. Remove oil on start-up.
5. Rotate output shaft 360° every 3-4 weeks.

[CONTINUED] →

WARRANTY

WARRANTY: All equipment or parts covered by this manual are guaranteed free from defective material and workmanship for a period of eighteen (18) months from date of purchase, under normal use and service . This warranty does not cover failure of normal wear parts unless the failure of such part has resulted from defective material and workmanship. BRAWN Mixer, Inc. will repair or replace, at its option, any equipment which has been found to be defective and is within the warranty period, provided that the equipment is shipped, with previous factory authorization, freight prepaid, to BRAWN's plant in Holland, Michigan, USA. All return shipments are made FOB BRAWN's factory. BRAWN is not responsible for removal, installation, or any other incidental expenses incurred in shipping the equipment to or from BRAWN. In the case of components purchased by BRAWN Mixer, Inc. and incorporated in the equipment, the component manufacturer's guarantee shall apply. NOTE: Any modifications or corrective work done to the equipment which were not specifically authorized in writing by BRAWN Mixer, Inc. shall void this limited warranty, and BRAWN Mixer, Inc. shall accept no liability for any of the corrective work or expenditures which were conducted without their prior, written authorization. BRAWN Mixer, Inc. shall not be held liable for any further cost, expense, or labor to replace equipment or replaceable parts, or indirect or consequential damages.

With the xceptions of the limited warranty set out above, there are no other understandings, agreements, representatives, or warranties implied (including any regarding the merchant-ability or fitness for a particular purpose), not specified herein, respecting this agreement or equipment, hereunder. This contract states the entire obligation of BRAWN Mixer, Inc. in connection with this transaction.

SHOULD WE MAKE A MISTAKE...

BRAWN Mixer, Inc.'s Direct Returns Policy

To ensure proper handling of your return, please take a moment to read the following:

- **ALL** returns require a **RETURN GOODS AUTHORIZATION (RGA) NUMBER**. We are unable to process your return or issue proper credit without an approved **RGA** number.
- **ALL** returns must be **COMPLETE**, including all original warranties, manuals, documentation and packaging.
- **ALL** product must be received within 20 days of issuing an **RGA** number.

How to Return Product

You must have a **RETURN GOODS AUTHORIZATION (RGA)** number before you return any product to BRAWN Mixer, Inc. To obtain this number, call **616/399-5600** and ask for Customer Service. Be sure to have available the following information:

- your order number
- the BRAWN product serial number
- the part number and description of the product
- the reason for the return

★ IMPORTANT ★

The Return Goods Authorization number must be written clearly on all boxes being returned. C.O.D. shipments will not be accepted.

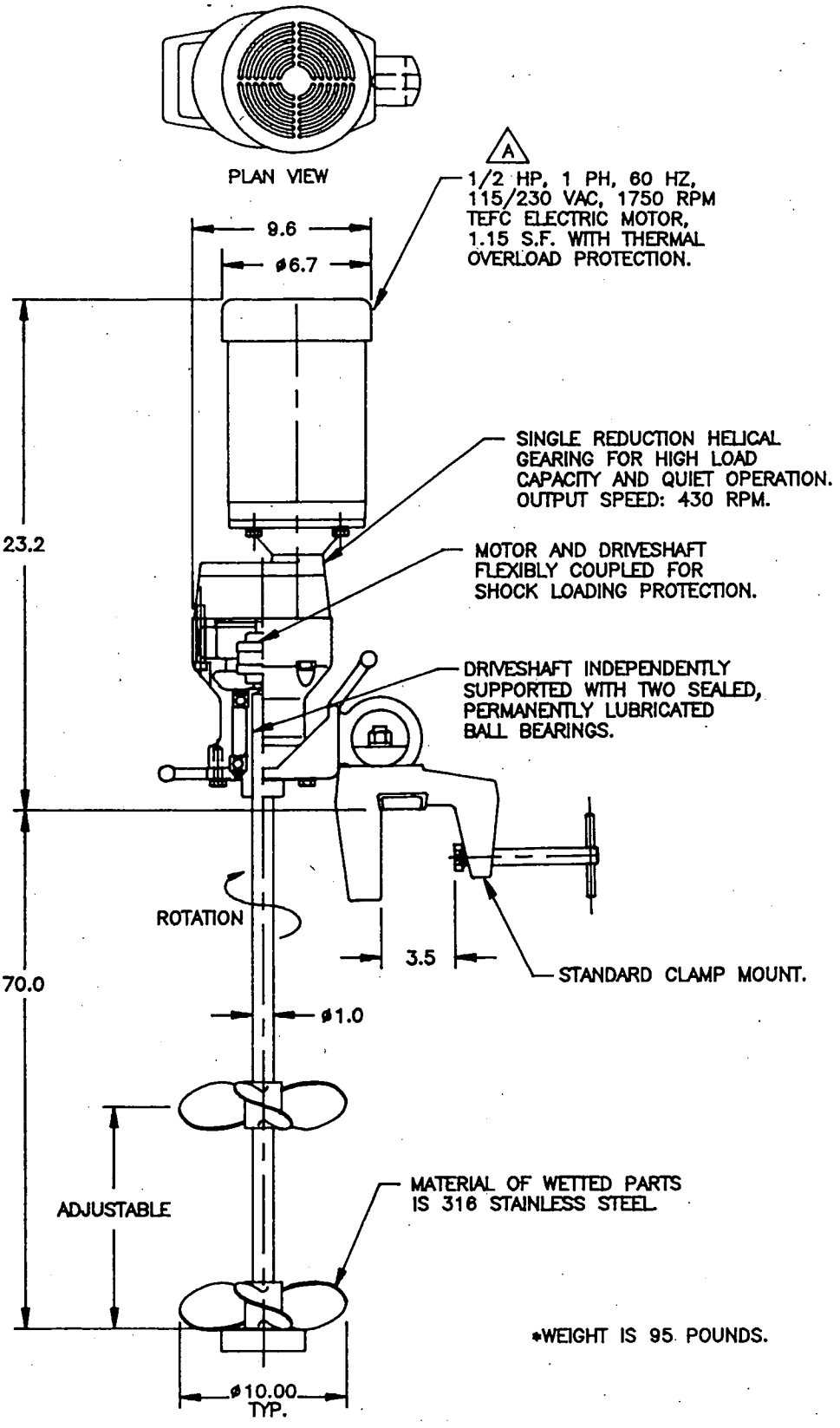

REV.A 1-27-95 WAS 3 PHASE

EQUALIZATION TANK #7

ALL EQUIPMENT DESIGN AND APPLICATION DATA SHOWN HEREIN IS CONFIDENTIAL AND THE PROPERTY OF BRAWN MIXER, INC. NO USE OR DISCLOSURE THEREOF MAY BE MADE WITHOUT OUR WRITTEN PERMISSION.

FILE NO.94116101 DATE 10-26-94 ©1994

BRAWN™ MIXER, INC.
HOLLAND, MI. 49424
PH. 616-399-5600
FAX 616-399-3084

MIXER MODEL
BGM50 GEAR DRIVE
REM SITES NASB, BRUNSWICK, ME
CONTRACT #: N624772-91-C-0034
DIMENSION AND ASSEMBLY DRAWING

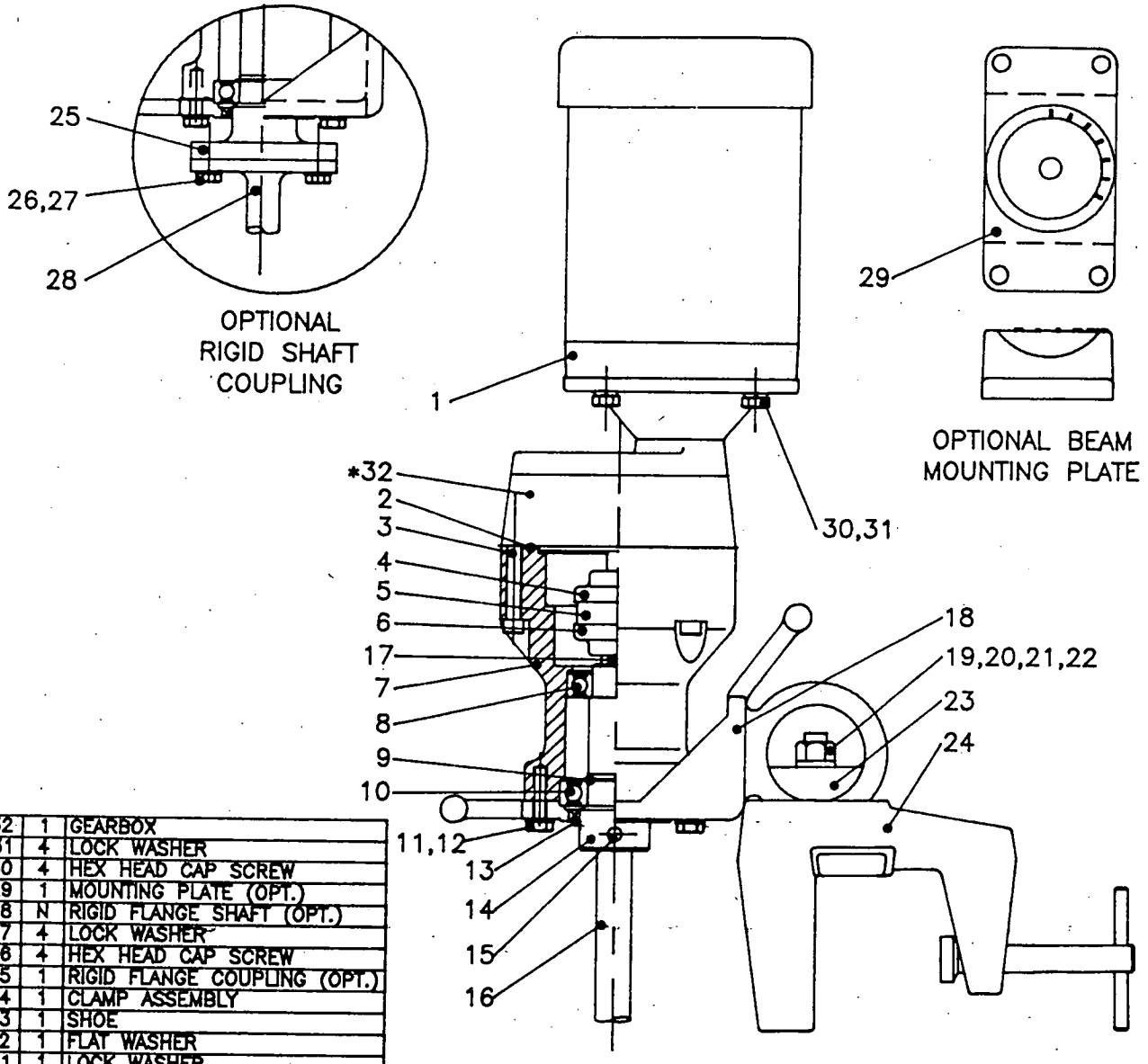

*REFER TO GEARBOX ASSEMBLY DRAWING

ITEM NO.	QTY.	PART NAME
32	1	GEARBOX
31	4	LOCK WASHER
30	4	HEX HEAD CAP SCREW
29	1	MOUNTING PLATE (OPT.)
28	N	RIGID FLANGE SHAFT (OPT.)
27	4	LOCK WASHER
26	4	HEX HEAD CAP SCREW
25	1	RIGID FLANGE COUPLING (OPT.)
24	1	CLAMP ASSEMBLY
23	1	SHOE
22	1	FLAT WASHER
21	1	LOCK WASHER
20	1	NUT
19	1	BOLT
18	1	BALL MOUNT
17	1	KEY
16	1	MIXER SHAFT
15	2	SET SCREW
14	1	CHUCK SHAFT
13	1	OIL SEAL
12	6	LOCK WASHER
11	6	HEX HEAD CAP SCREW
10	1	BALL BEARING
9	1	SNAP RING
8	1	BALL BEARING
7	1	HOUSING
6	1	COUPLING HUB
5	1	SLEEVE
4	1	COUPLING HUB
3	4	SOCKET HEAD CAP SCREW
2	1	O-RING
1	1	MOTOR

ALL EQUIPMENT DESIGN AND APPLICATION DATA SHOWN HEREIN IS CONFIDENTIAL AND THE PROPERTY OF BRAWN MIXER, INC. NO USE OR DISCLOSURE THEREOF MAY BE MADE WITHOUT OUR WRITTEN PERMISSION.

FILE NO. 109303 DATE 10-17-93 ©1993

BRAWN™ MIXER, INC.
HOLLAND, MI. 49424
PH. 616-399-5600
FAX 616-399-3084

MIXER MODEL
BGM33 THRU 200
GEAR DRIVE

ASSEMBLY DRAWING

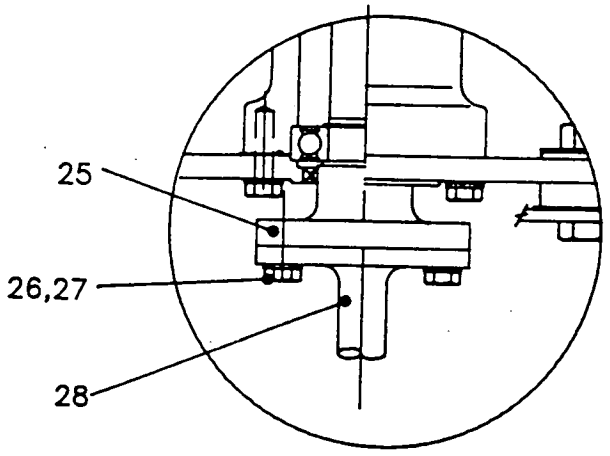

OPTIONAL
RIGID SHAFT
COUPLING

*REFER TO GEARBOX ASSEMBLY DRAWING

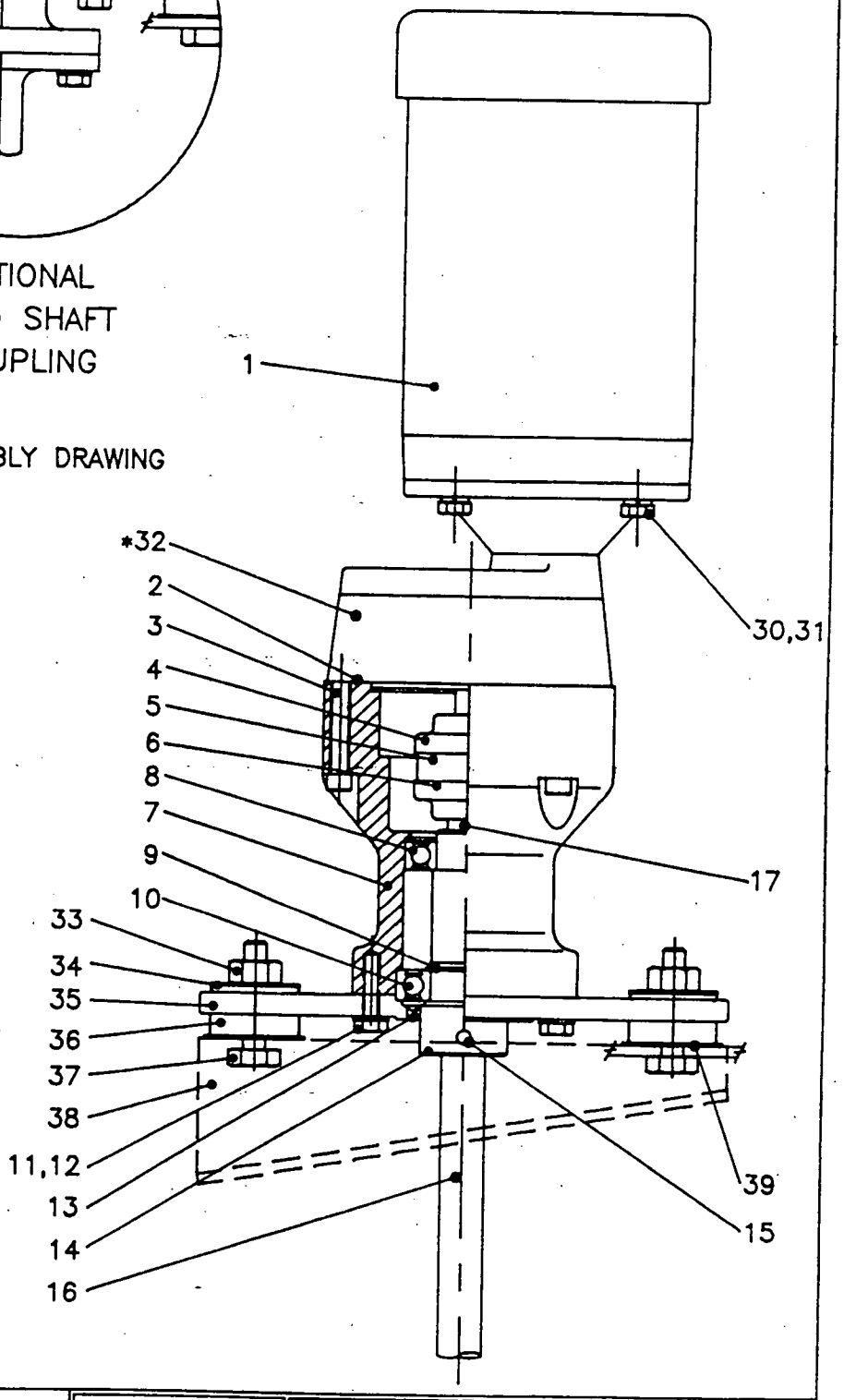

ITEM NO.	QTY.	PART NAME
39	4	HEAD WASHER
38	2	ANGLE RISERS (OPTIONAL)
37	4	BOLT
36	4	ISOLATION MOUNT
35	1	MOUNTING PLATE
34	4	TAIL WASHER
33	4	NUT
32	1	GEARBOX
31	4	LOCK WASHER
30	4	HEX HEAD CAP SCREW
28	1	RIGID FLANGE SHAFT (OPT.)
27	4	LOCK WASHER
26	4	HEX HEAD CAP SCREW
25	1	RIGID FLANGE COUPLING (OPT.)
17	1	KEY
16	1	MIXER SHAFT
15	2	SET SCREW
14	1	CHUCK SHAFT
13	1	OIL SEAL
12	6	LOCK WASHER
11	6	HEX HEAD CAP SCREW
10	1	BALL BEARING
9	1	SNAP RING
8	1	BALL BEARING
7	1	HOUSING
6	1	COUPLING HUB
5	1	SLEEVE
4	1	COUPLING HUB
3	4	SOCKET HEAD CAP SCREW
2	1	O-RING
1	1	MOTOR

ALL EQUIPMENT DESIGN AND APPLICATION DATA SHOWN HEREIN IS CONFIDENTIAL AND THE PROPERTY OF BRAWN MIXER, INC. NO USE OR DISCLOSURE THEREOF MAY BE MADE WITHOUT OUR WRITTEN PERMISSION.

FILE NO. 109304 DATE 10-19-93 ©1993

BRAWN™ MIXER, INC.
HOLLAND, MI. 49424
PH. 616-399-5800
FAX 616-399-3084

MIXER MODEL
BGMF33 THRU 200
GEAR DRIVE
ASSEMBLY DRAWING

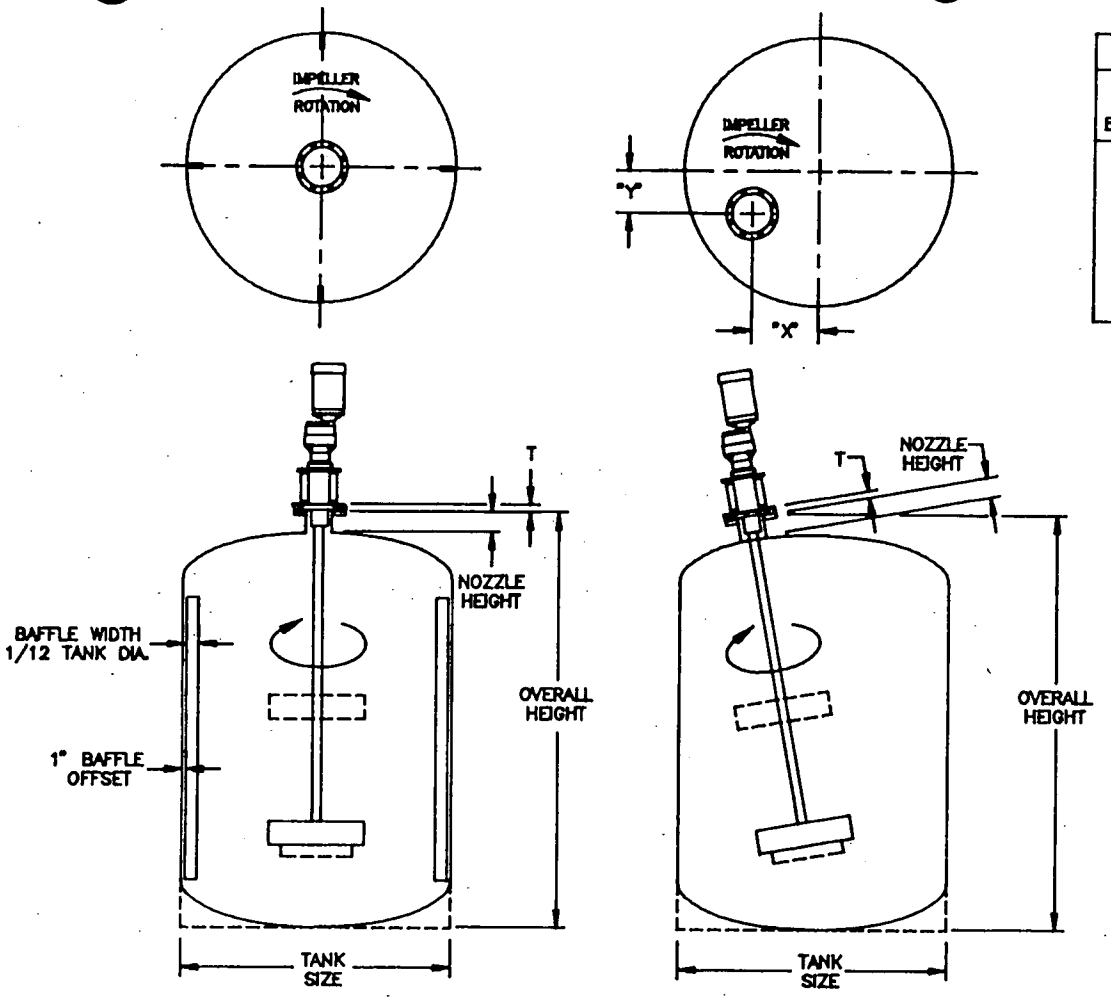

VERTICAL ON CENTER MOUNTING

ANGLE OFF-SET MOUNTING
(SEE TABLE 2 FOR DIMENSIONS)

MOUNTING HOLE DIMENSIONS							DESIGN LOADS		
MIXER MODEL BD/BGM	150 LB. ANSI FLANGE DRILLING						DOWNWARD LOAD (LBS.)	BENDING (IN. LBS.)	TORSIONAL (IN. LBS.)
	ANSI SIZE	O.D.	BOLT CIRC.	NO. HOLES	BOLT DIA.	T			
25	6	11.0	9.50	8	.75	1.63	320	4,300	100
33	6	11.0	9.50	8	.75	1.63	335	4,300	150
50	6	11.0	9.50	8	.75	1.63	350	4,300	200
75	6	11.0	9.50	8	.75	1.63	365	4,300	300
100	6	11.0	9.50	8	.75	1.63	380	4,300	400
150	8	13.5	11.75	8	.75	1.88	500	7,500	600
200	8	13.5	11.75	8	.75	1.88	520	7,500	800
300	8	13.5	11.75	8	.75	1.88	540	8,700	1,200
500	8	13.5	11.75	8	.75	1.88	560	8,700	2,000

TABLE 1

TANK DIA.	"X"	"Y"
30"	9"	5"
33"	10"	5.5"
36"	11"	6"
39"	11.5"	6.5"
42"	13.5"	7"
45"	14.5"	7.5"
48"	15.5"	8.75"
51"	17"	9.5"
54"	18"	10"
57"	19"	10.5"
60"	20"	11"
63"	21.5"	12"
66"	22.5"	12.5"
69"	23.5"	13"
72"	25"	14"
75"	26"	14.75"
78"	27"	15.5"
81"	28.5"	16.5"
84"	29.5"	17"
90"	31.5"	18"
93"	32.5"	18.5"
96"	34"	19.5"
99"	35"	20"
102"	36"	20.5"
105"	37"	21"
108"	38.5"	22"
111"	39.5"	22.5"
114"	40.5"	23"
117"	42"	24"
120"	43"	24.5"
126"	45.5"	26"
132"	47.5"	27"
138"	50"	28.5"
144"	52"	30"

TABLE 2

NOTES:

1. WARRANTY APPLIES ONLY TO ITEMS FURNISHED BY BRAWN MIXER, INC. ALL OTHER EQUIPMENT AND DESIGNS ARE THE RESPONSIBILITY OF OTHERS. BRAWN MIXER, INC. DOES NOT WARRANT, GUARANTEE, OR ASSUME ANY RESPONSIBILITY FOR THE DESIGN OR CONSTRUCTION OF THE MOUNTING STRUCTURE FOR THE MIXER.
2. DESIGN LOADS ARE GREATER THAN ACTUAL LOADS BY A SUITABLE FACTOR TO PROVIDE FOR ADEQUATE DESIGN OF MIXER MOUNTING STRUCTURE.
3. ROUND TANKS REQUIRE BAFFLES AS SHOWN, UNLESS OTHERWISE INSTRUCTED BY BRAWN MIXER, INC.
4. DESIGN LOAD AND NOZZLE MOUNTING INFORMATION, FOR CLOSED TANK INSTALLATION, IS APPLICABLE FOR BOTH STUFFING BOX AND MECHANICAL SEAL MIXERS.
5. FLANGE SIZES LARGER THAN STANDARD ARE AVAILABLE AS AN OPTION.

ALL EQUIPMENT DESIGN AND APPLICATION DATA SHOWN HEREIN IS CONFIDENTIAL AND THE PROPERTY OF BRAWN MIXER, INC. NO USE OR DISCLOSURE THEREOF MAY BE MADE WITHOUT OUR WRITTEN PERMISSION.

FILE NO. SDB101A DATE 9-7-94 1994

BRAWN MIXER, INC.

MIXER MODEL

BD & BGM ANSI FLANGE MOUNT

DIMENSION AND ASSEMBLY DRAWING

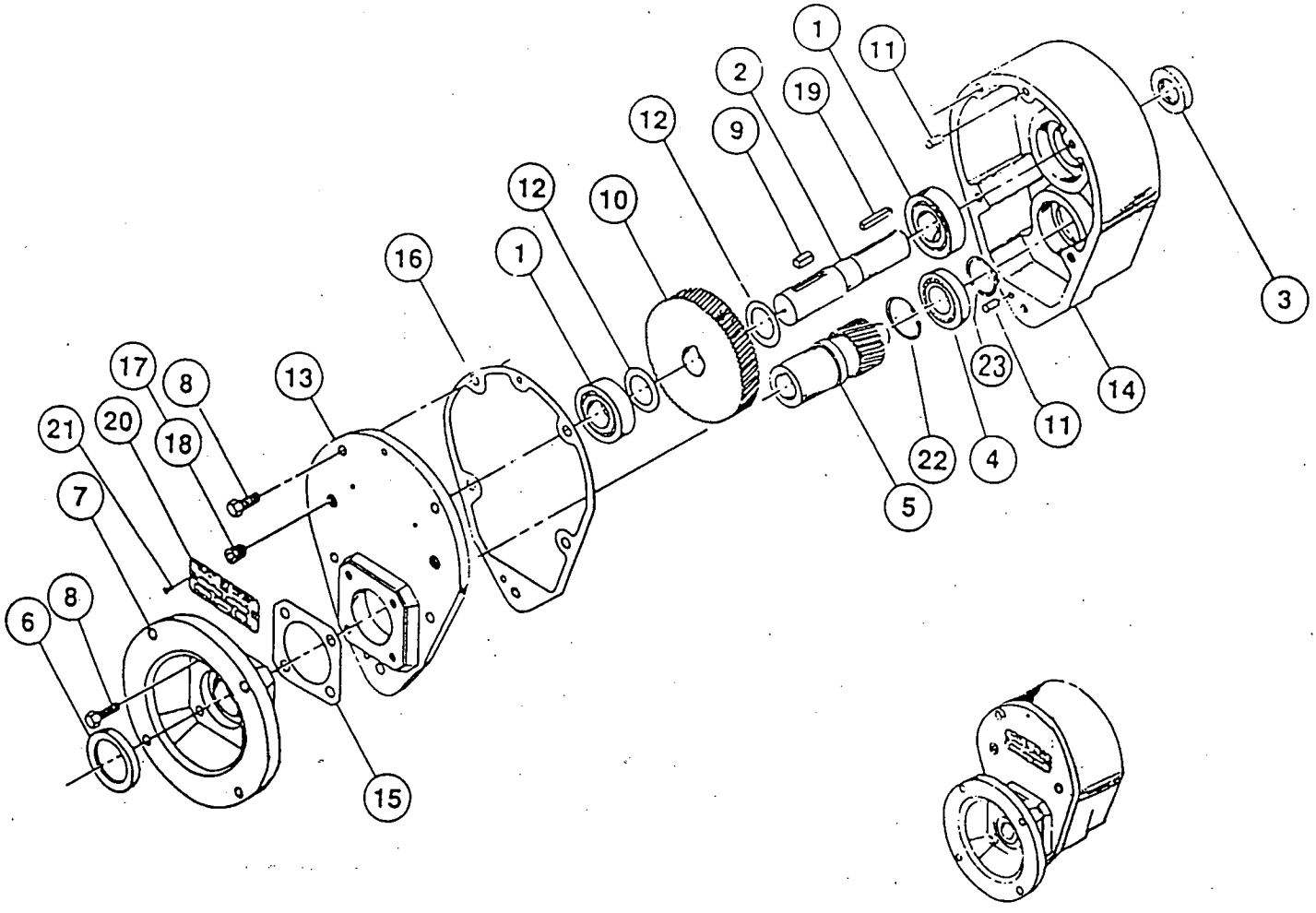

1. Bearing, Output (Ball) — 2 req.
2. Shaft, Output (state output frame size)
3. Seal, Oil (Output)
4. Bearing, Input (Ball)
5. Shaft, Input
6. Seal, Oil (Input)
7. Flange, Motor
8. Screw
9. Key, Gear
10. Gear, Output
11. Pin, Dowel — 2 req.
12. Spacer, Low Speed — 2 req.
13. Cover, Housing
14. Housing, Gear
15. Gasket, Input cover
16. Gasket, Housing
17. Plug, Pipe — 2 req.
18. Plug, Vent
19. Key, Output Shaft
20. Plate, specification
21. Screw, Drive (spec. plate) — 2 req.
22. Ring, Retaining, Internal, Input Shaft
23. Ring, Retaining, External, Input Shaft

BRAWN™
MIXER, INC.
12764 Greenly Street ■ Holland, MI 49424
Phone: 616/399-5600 ■ Fax: 616/399-3084

OPERATION & MAINTENANCE MANUAL

CONTENTS

Mixer Installation / Assembly / Dimension Drawings
Customer Service Contact 1
Initial Inspection 1
Safety 2
Installation 2-3
Lubrication 4
Storage 4
Warranty 5

CUSTOMER SERVICE

Mixer Model # . . . . . BGM-SERIES
Mixer Serial #_____
Contact:
☛ Customer Service 616/399-5600

You have received a quality engineered and manufactured BRAWN Mixer. We value your business, and we will strive to provide you with the proper service and equipment to meet your needs.

The information contained in this BRAWN Mixer Operator's Manual is designed to assist you in putting your BRAWN Mixer into operation without further delay. **Please read the entire manual before attempting to start your mixer.** If you have any further questions or if, by some chance, there are some missing components, contact your BRAWN Mixer Representative or the factory immediately.

We welcome your comments and suggestions concerning any BRAWN Mixer product. Please direct these comments in writing to the National Sales Manager at BRAWN Mixer, Inc., located in Holland, Michigan. To expedite troubleshooting service, please make your initial contact through your BRAWN Mixer Representative. If, for whatever reason, your representative cannot be reached and you have an emergency condition, please call us directly at 616/399-5600 and ask for the Customer Service Department.

Remember, you are backed by your BRAWN Mixer Technical representative and the factory support team. We are here to assist you; let us know how we can be of help.

INITIAL INSPECTION

1. Upon receipt of your BRAWN Mixer, check for possible shipping damage. Report any damage immediately to the carrier and to BRAWN Mixer, Inc.

2. All BRAWN Mixers are shipped with the shaft and impeller(s) disassembled from the drive assembly. In addition, the clamp or cup mount and any mounting hardware for portable mixers are shipped loose.

3. Storage: Mixers should not be stored near vibrating machinery to avoid damage to the bearings. Store mixers as packaged by the factory. For longer storage periods, consult factory. If electric motors have been subjected to humid conditions, check the insulation resistance between phase and mass and between the different phases. The resistance should not be less than 100 megohms. If the resistance is less, please consult the factory. If mixer is stored for more than a year, the condition of the gear lubricant should be checked before the mixer is put in operation (see lubrication instructions).

[CONTINUED] →

SAFETY

The precautions mentioned in this manual are not intended to cover all hazards that may exist in a plant or on this equipment. Using safety mechanisms requires the constant attention of everyone in the vicinity of this (or any) equipment.

A plant and the related equipment are only as safe as the personnel are safety-minded. Proper equipment maintenance and the use of personal safety devices will contribute as much toward safety as will any number of mechanical safety devices.

- To assure maximum safety, optimum performance, and to gain knowledge of the product, it is essential that you or any other operator of this equipment read and understand the contents of this manual before the mixer is operated.
- Do not operate this equipment unless all safety devices are working properly. Check all devices prior to starting the equipment.
- Develop a safety checklist for this equipment and perform regular maintenance to ensure continued and proper operation.
- Disconnect and lock out electrical power before servicing the mixer.
- Do not touch rotating parts.
- Do not make any field changes or modifications without reviewing the change with your BRAWN sales representative or the BRAWN Customer Service Department.

INSTALLATION

[REFER TO ASSEMBLY / DIMENSION DRAWING.]

Refer to the mixer installation / assembly drawing for important mounting structure design, assembly, mounting and dimensional data.

1. Models BD and BGM portable mixers are designed with handles incorporated in the mounting base. These are intended for lifting of the mixer assembly.

2. For clamp-mount units, install the mixer drive on the mounting structure and secure by tightening the clamp screw.

   - For fixed-mount and cup plate mount mixers, install the mixer drive on the mounting structure and secure with properly-sized, Grade 5 or better hardware. Torque the hardware as recommended in TABLE 1.

3. Install the impeller(s) on the mixer shaft by carefully sliding the impeller hub over the shaft to its proper location and tighten the set screws.

4. Install mixer shaft [16] by inserting the end with machined groove into the chuck driveshaft [14]. (It is recommended that the mixer shaft portion engaged in chuck driveshaft be coated with an anti-seize compound.). Tighten setscrews [15] to secure shaft.

   - If optional rigid shaft coupling [25] is furnished, connect the mixer shaft [28] and rigid driveshaft couplings by carefully engaging the shaft rabbeted faces and installing the mounting hardware [26 & 27]. Be careful not to damage the coupling faces or rabbets, as this can cause excessive shaft runout that will affect the life of the mixer.

TABLE 1: RECOMMENDED TORQUE VALUES

HARDWARE SIZE	TORQUE VALUES (FOOT POUNDS)	
	STANDARD GRADE 2 & 300 SERIES STAINLESS	HIGH STRENGTH GRADES 5 & 8
3/8 — 16	17	27
7/16 — 14	27	40
1/2 — 13	40	65
9/16 — 12	65	90
5/8 — 11	85	125
3/4 — 10	135	225
7/8 — 9	145	365
1 — 8	210	545

[CONTINUED] →

INSTALLATION CONTINUED...

BOLT-TIGHTENING RECOMMENDATIONS: Inadequately or improperly tightened hardware can loosen due to vibration during mixer operation. This can result in reduced mixer life or damage to equipment. Recommended torques for tightening all in-tank and mounting hardware are listed in **TABLE 1** [Page 2]. These average torque values should be considered only as guides and not as absolute values.

The following guidelines are based on mixing in vertical cylindrical tanks with flat, dished, or shallow cone bottoms. Mixer installations may vary with tank shape, retention times, starting conditions and other requirements.

1. For liquid levels 0.5 to 1.1 times the tank diameter, a single impeller is suitable.
2. For liquid levels 1.1 to 1.6 times the tank diameter, use dual impellers.
3. Impellers may be located from 0.5 to 2.0 impeller diameters off the tank bottom, with one diameter off bottom being optimum.
4. When dual impellers are necessary, spacing between impellers should be approximately two impeller diameters with gear drives, and four to five impeller diameters with direct drive mixers.
5. Mixer position in tank should be as shown in **FIGURE A** [below] for maximum turnover of liquid.

FIGURE A

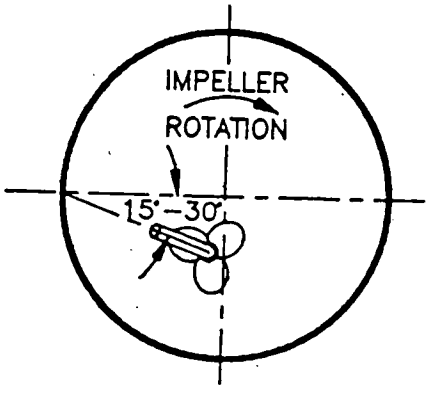

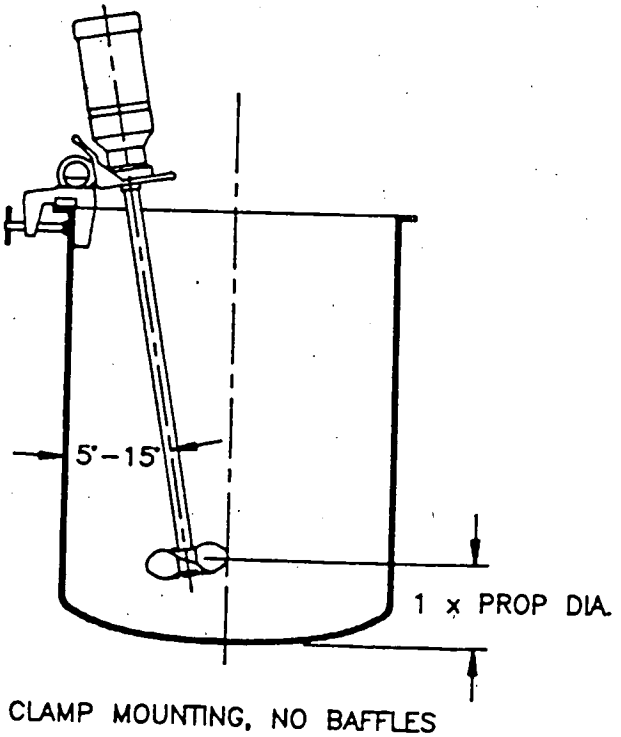

CLAMP MOUNTING, NO BAFFLES

[CONTINUED] →

LUBRICATION

Gear boxes are lubricated for life. If the application calls for outdoor installation in extremely cold or extremely warm temperatures, or in corrosive environments, consult the factory.

STORAGE

Units shipped from BRAWN Mixer, Inc. are intended to be used within 30 days after receipt and presumed to be stored indoors in a heated building. If you intend storing units under adverse conditions or for a long period of time, special storage precautions will be necessary.

1. Store in a sheltered area away from chemical vapors or steam.
2. Cover.
3. Do not store in sunlight or near high heat.
4. Spray oil on exposed shafts and seals. Remove oil on start-up.
5. Rotate output shaft 360° every 3-4 weeks.

[CONTINUED] →

WARRANTY

LIMITED WARRANTY: All equipment or parts covered by this manual are free from defective material and workmanship, under normal use and service for a period of eighteen (18) months from date of purchase. This warranty does not cover failure of normal wear parts unless the failure of such part has resulted from defective material and workmanship. BRAWN Mixer, Inc. will repair or replace, at its option, any equipment which has been found to be defective and is within the warranty period, provided that the equipment is shipped, with previous factory authorization, freight prepaid, to BRAWN's plant in Holland, Michigan, USA. All return shipments are made FOB BRAWN's factory. BRAWN is not responsible for removal, installation, or any other incidental expenses incurred in shipping the equipment to or from BRAWN. In the case of components purchased by BRAWN Mixer, Inc. and incorporated in the equipment, the component manufacturer's guarantee shall apply. NOTE: Any modifications or corrective work done to the equipment which were not specifically authorized in writing by BRAWN Mixer, Inc. shall void this limited warranty, and BRAWN Mixer, Inc. shall accept no liability for any of the corrective work or expenditures which were conducted without their prior, written authorization. BRAWN Mixer, Inc. shall not be held liable for any further cost, expense, or labor to replace equipment or replaceable parts, or indirect or consequential damages.

With the exceptions of the limited warranty set out above, there are no other understandings, agreements, representatives, or warranties implied (including any regarding the merchant-ability or fitness for a particular purpose), not specified herein, respecting this agreement or equipment, hereunder. This contract states the entire obligation of BRAWN Mixer, Inc. in connection with this transaction.

SHOULD WE MAKE A MISTAKE...

BRAWN Mixer, Inc.'s Direct Returns Policy

To ensure proper handling of your return, please take a moment to read the following:

- **ALL** returns require a **RETURN GOODS AUTHORIZATION (RGA) NUMBER**. We are unable to process your return or issue proper credit without an approved **RGA** number.
- **ALL** returns must be **COMPLETE**, including all original warranties, manuals, documentation and packaging.
- **ALL** product must be received within 20 days of issuing an **RGA** number.

How to Return Product

You must have a **RETURN GOODS AUTHORIZATION (RGA)** number before you return any product to BRAWN Mixer, Inc. To obtain this number, call **616/399-5600** and ask for Customer Service. Be sure to have available the following information:

- your order number
- your customer number
- the BRAWN product serial number
- the part number and description of the product
- the reason for the return

★ IMPORTANT ★

The Return Goods Authorization number must be written clearly on all boxes being returned. C.O.D. shipments will not be accepted.

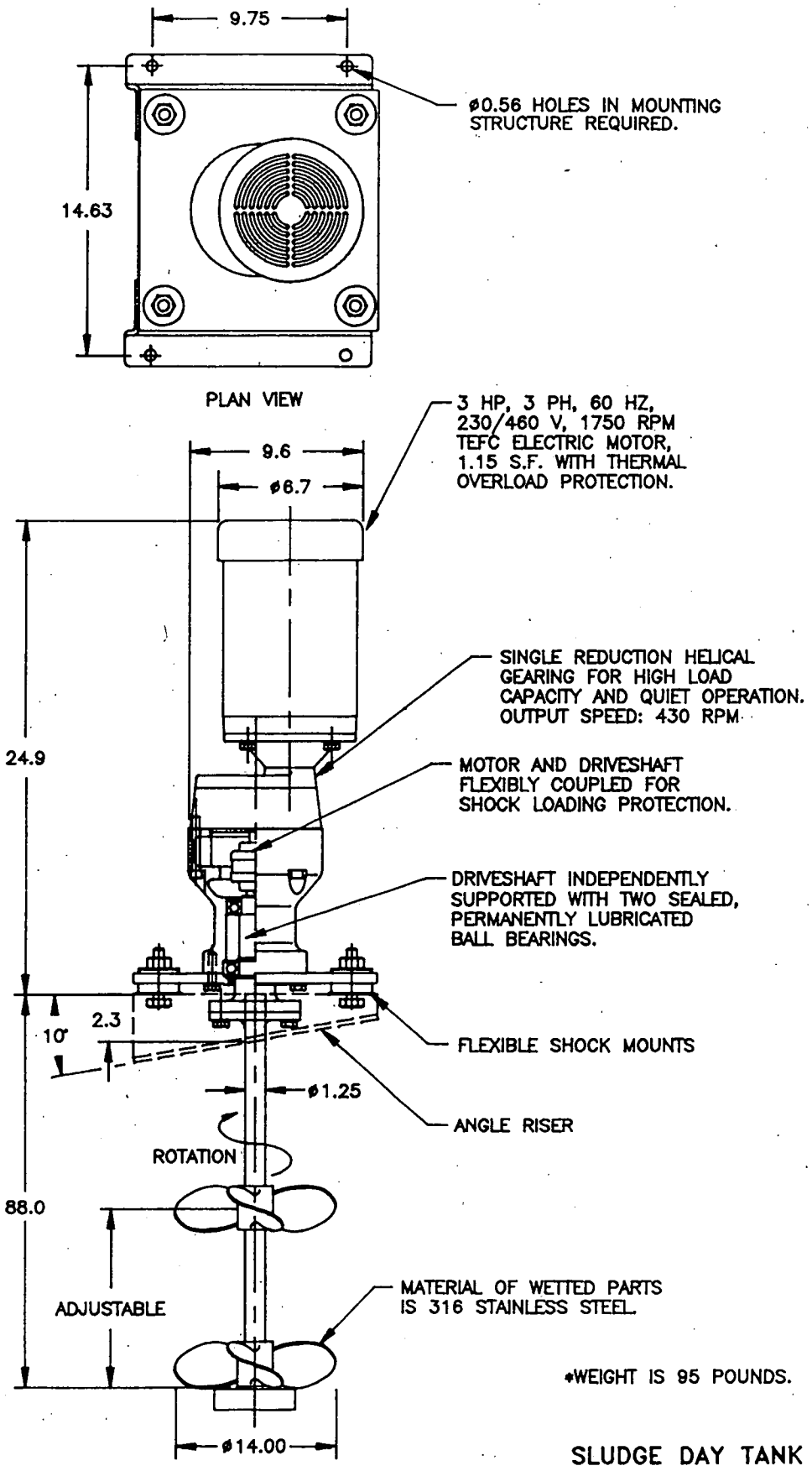

*WEIGHT IS 95 POUNDS.

SLUDGE DAY TANK #13

ALL EQUIPMENT DESIGN AND APPLICATION DATA SHOWN HEREIN IS CONFIDENTIAL AND THE PROPERTY OF BRAWN MIXER, INC. NO USE OR DISCLOSURE THEREOF MAY BE MADE WITHOUT OUR WRITTEN PERMISSION.

FILE NO.94116401 DATE 10-26-94 ©1994

BRAWN™ MIXER, INC.
HOLLAND, MI. 49424
PH. 616-399-5600
FAX 616-399-3084

MIXER MODEL
BGMF300 GEAR DRIVE
REM SITES NASB, BRUNSWICK, ME
CONTRACT #: N624772-91-C-0034
DIMENSION AND ASSEMBLY DRAWING

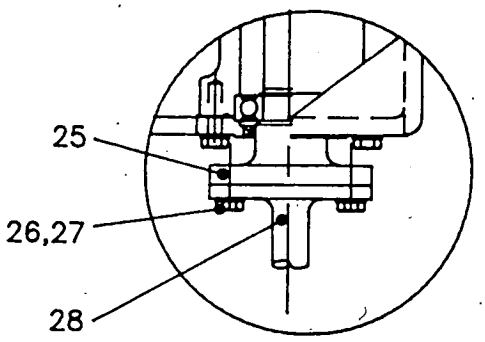

OPTIONAL
RIGID SHAFT
COUPLING

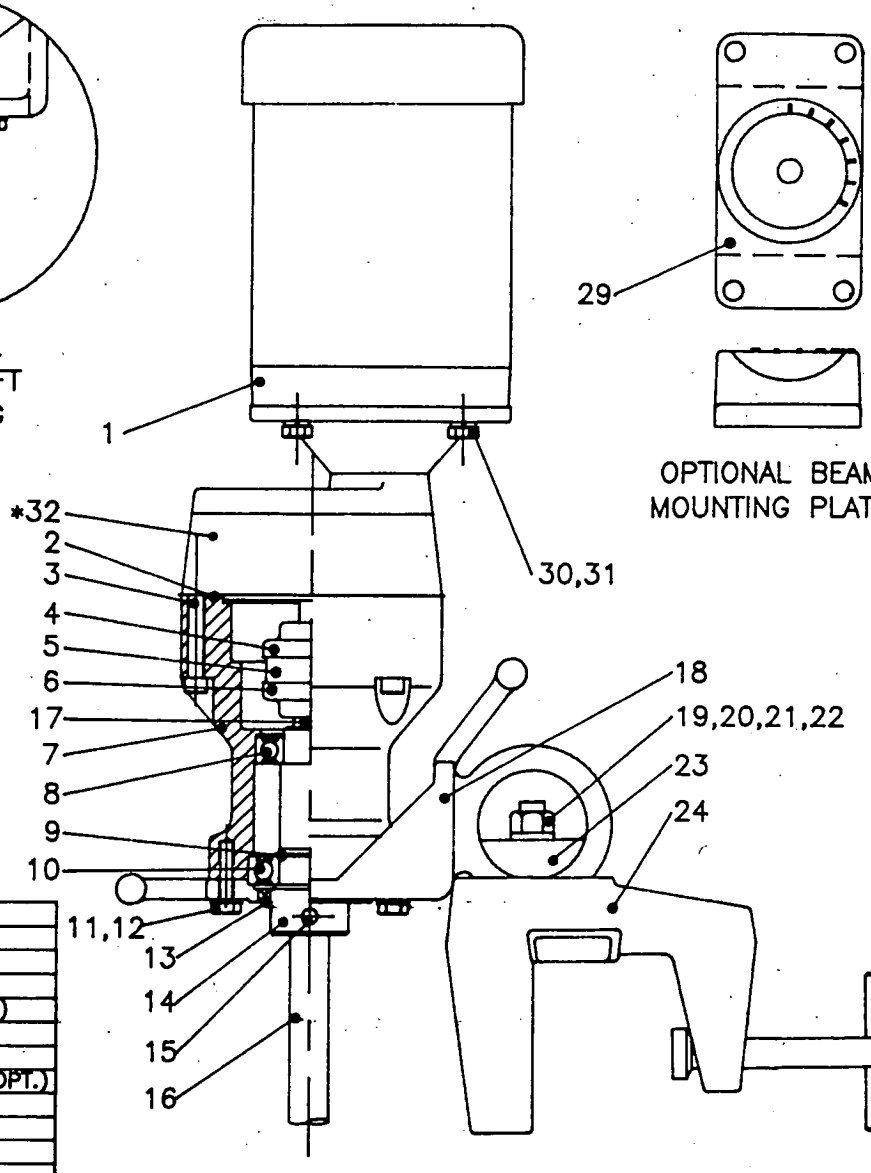

OPTIONAL BEAM
MOUNTING PLATE

*REFER TO GEARBOX ASSEMBLY DRAWING

ITEM NO.	QTY.	PART NAME
32	1	GEARBOX
31	4	LOCK WASHER
30	4	HEX HEAD CAP SCREW
29	1	MOUNTING PLATE (OPT.)
28	N	RIGID FLANGE SHAFT (OPT.)
27	4	LOCK WASHER
26	4	HEX HEAD CAP SCREW
25	1	RIGID FLANGE COUPLING (OPT.)
24	1	CLAMP ASSEMBLY
23	1	SHOE
22	1	FLAT WASHER
21	1	LOCK WASHER
20	1	NUT
19	1	BOLT
18	1	BALL MOUNT
17	1	KEY
16	1	MIXER SHAFT
15	2	SET SCREW
14	1	CHUCK SHAFT
13	1	OIL SEAL
12	6	LOCK WASHER
11	6	HEX HEAD CAP SCREW
10	1	BALL BEARING
9	1	SNAP RING
8	1	BALL BEARING
7	1	HOUSING
6	1	COUPLING HUB
5	1	SLEEVE
4	1	COUPLING HUB
3	4	SOCKET HEAD CAP SCREW
2	1	O-RING
1	1	MOTOR

ALL EQUIPMENT DESIGN AND APPLICATION DATA SHOWN HEREIN IS CONFIDENTIAL AND THE PROPERTY OF BRAWN MIXER, INC. NO USE OR DISCLOSURE THEREOF MAY BE MADE WITHOUT OUR WRITTEN PERMISSION.

FILE NO. 109303 DATE 10-17-93 ©1993

BRAWN™ MIXER, INC.
HOLLAND, MI. 49424
PH. 616-399-5600
FAX 616-399-3084

MIXER MODEL
BGM33 THRU 200
GEAR DRIVE

ASSEMBLY DRAWING

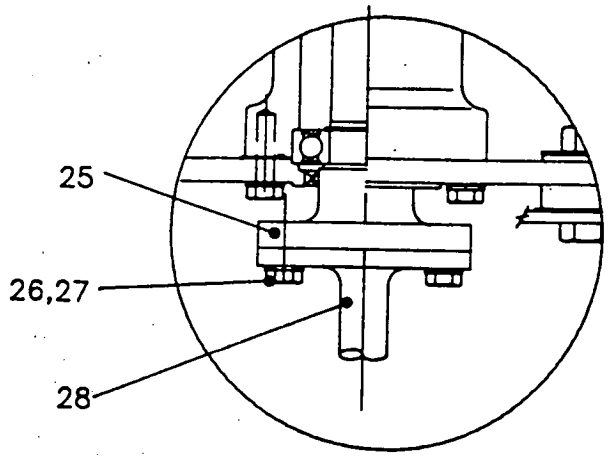

OPTIONAL
RIGID SHAFT
COUPLING

*REFER TO GEARBOX ASSEMBLY DRAWING

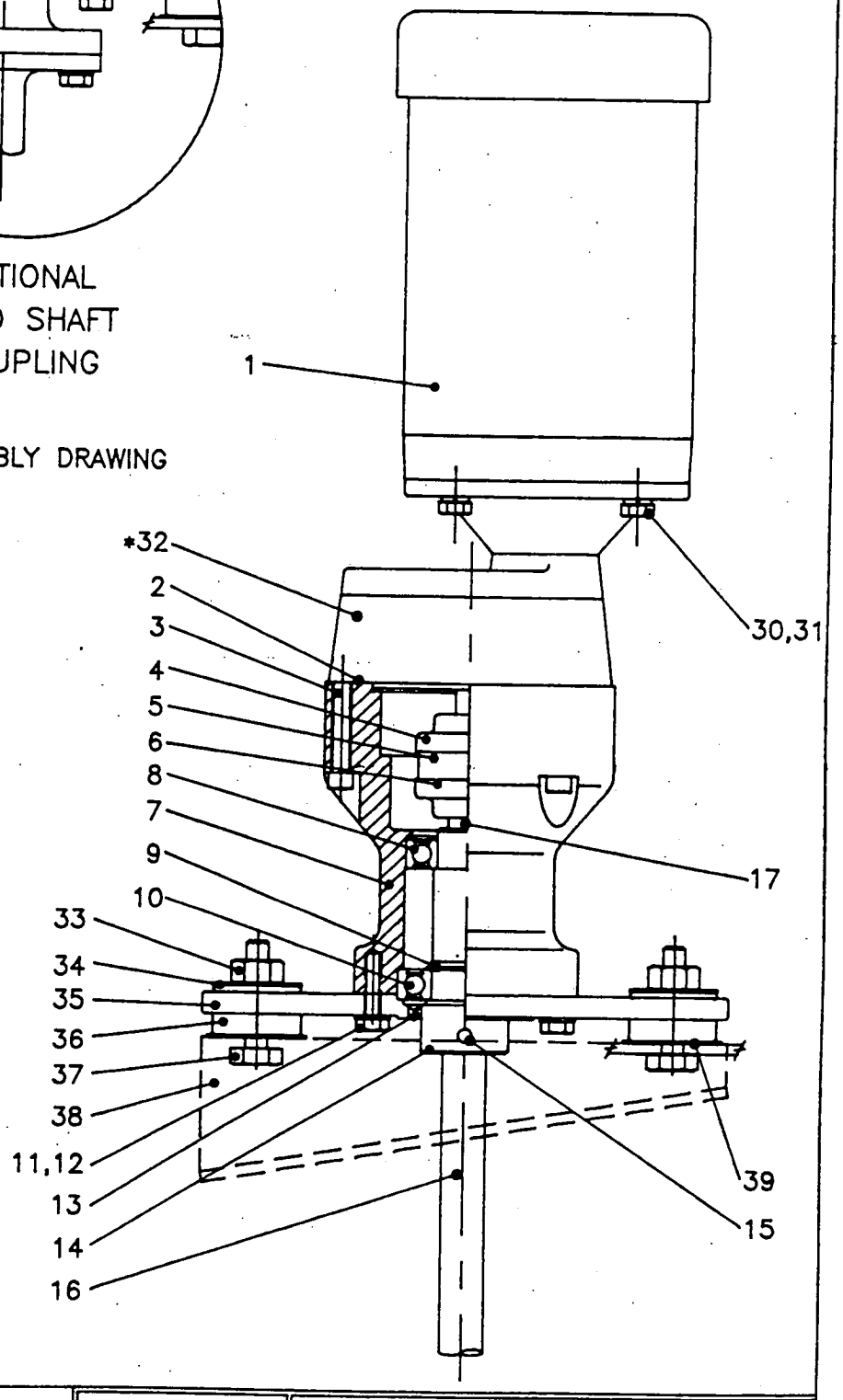

ITEM NO.	QTY.	PART NAME
39	4	HEAD WASHER
38	2	ANGLE RISERS (OPTIONAL)
37	4	BOLT
36	4	ISOLATION MOUNT
35	1	MOUNTING PLATE
34	4	TAIL WASHER
33	4	NUT
32	1	GEARBOX
31	4	LOCK WASHER
30	4	HEX HEAD CAP SCREW
28	1	RIGID FLANGE SHAFT (OPT.)
27	4	LOCK WASHER
26	4	HEX HEAD CAP SCREW
25	1	RIGID FLANGE COUPLING (OPT.)
17	1	KEY
16	1	MIXER SHAFT
15	2	SET SCREW
14	1	CHUCK SHAFT
13	1	OIL SEAL
12	6	LOCK WASHER
11	6	HEX HEAD CAP SCREW
10	1	BALL BEARING
9	1	SNAP RING
8	1	BALL BEARING
7	1	HOUSING
6	1	COUPLING HUB
5	1	SLEEVE
4	1	COUPLING HUB
3	4	SOCKET HEAD CAP SCREW
2	1	O-RING
1	1	MOTOR

ALL EQUIPMENT DESIGN AND APPLICATION DATA SHOWN HEREIN IS CONFIDENTIAL AND THE PROPERTY OF BRAWN MIXER, INC. NO USE OR DISCLOSURE THEREOF MAY BE MADE WITHOUT OUR WRITTEN PERMISSION.

FILE NO. 109304 DATE 10-19-93 ©1993

BRAWN™ MIXER, INC.
HOLLAND, MI. 49424
PH. 616-399-5600
FAX 616-399-3084

MIXER MODEL
BGMF33 THRU 200
GEAR DRIVE
ASSEMBLY DRAWING

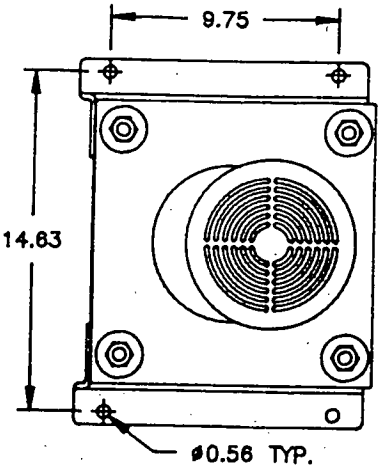

OPTIONAL ANGLE RISER MOUNTING

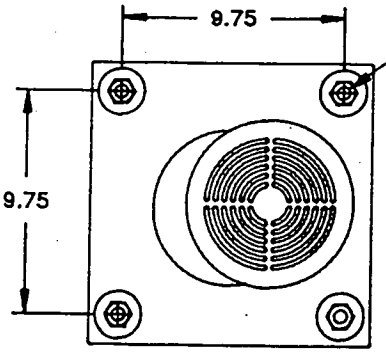

PLAN VIEW

ø0.56 HOLES IN MOUNTING STRUCTURE REQUIRED.

STANDARD TEFC THREE PHASE ELECTRIC MOTORS AVAILABLE IN 3 AND 5 HORSEPOWER. MOTOR OPTIONS INCLUDE: DC WITH VARIABLE SPEED CONTROL, EXPLOSION-PROOF AND AIR.

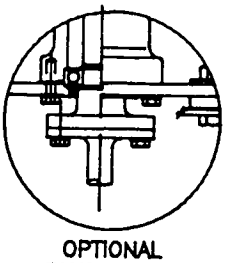

OPTIONAL RIGID SHAFT COUPLING

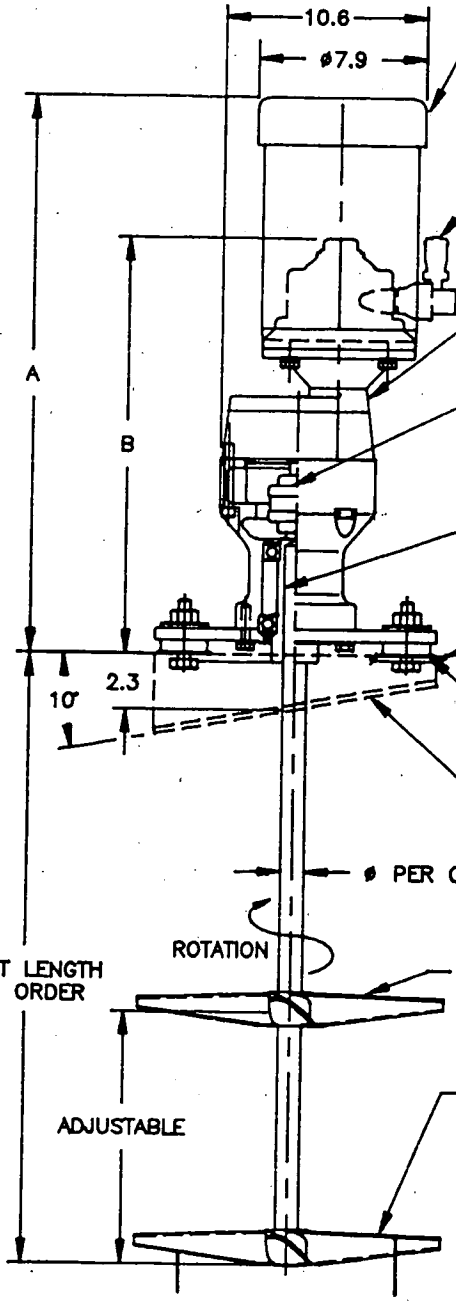

OPTIONAL AIR MOTOR INCLUDES MUFFLER AND NEEDLE VALVE. REFER TO TABLE FOR AIR SUPPLY REQUIREMENTS.

SINGLE REDUCTION HELICAL GEARING FOR HIGH LOAD CAPACITY AND QUIET OPERATION.

MOTOR AND DRIVESHAFT FLEXIBLY COUPLED FOR SHOCK LOADING PROTECTION.

DRIVESHAFT INDEPENDENTLY SUPPORTED WITH TWO SEALED, PERMANENTLY LUBRICATED BALL BEARINGS.

MOUNTING STRUCTURE (BY OTHERS).

FLEXIBLE SHOCK MOUNTS

OPTIONAL ANGLE RISER

OPTIONAL UPPER IMPELLER.

STANDARD MATERIAL OF WETTED PARTS IS 316 STAINLESS STEEL. OTHER MATERIALS OPTIONALLY AVAILABLE.

MIXER MODEL	DIMENSION		
	A	B	*WGT.
BGM300	25.6	18.9	116
BGM500	27.0	19.8	131

AIR MOTOR HORSEPOWER AND AIR CONSUMPTION		
HORSEPOWER	3	5
MAX. AIR CONSUMPTION CFM 100 PSI	120	175
INLET SIZE (NPT)	3/4	1

*WEIGHT IS IN POUNDS WITH ELECTRIC MOTOR. DOES NOT INCLUDE SHAFT, IMPELLERS, OR AIR MOTOR.

ALL EQUIPMENT DESIGN AND APPLICATION DATA SHOWN HEREIN IS CONFIDENTIAL AND THE PROPERTY OF BRAWN MIXER, INC. NO USE OR DISCLOSURE THEREOF MAY BE MADE WITHOUT OUR WRITTEN PERMISSION.

FILE NO.0394010 DATE 3-17-94 ©1994

BRAWN™ MIXER, INC.
HOLLAND, MI. 49424
PH. 616-399-5600
FAX 616-399-3084

MIXER MODEL BGMF300 AND 500 GEAR DRIVE

DIMENSION AND ASSEMBLY DRAWING

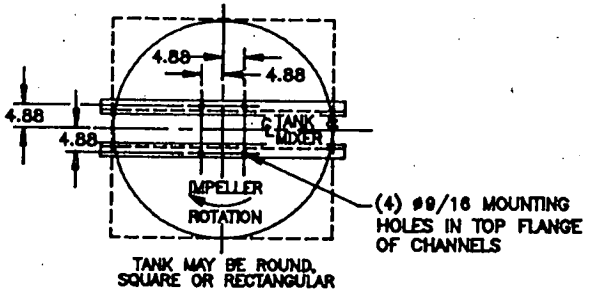

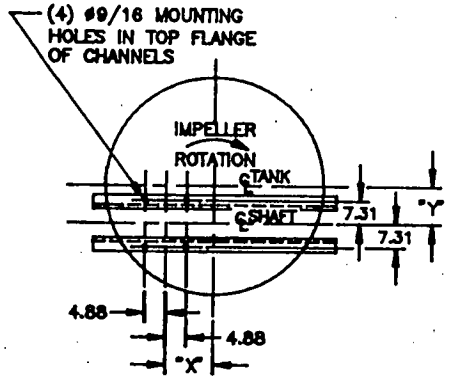

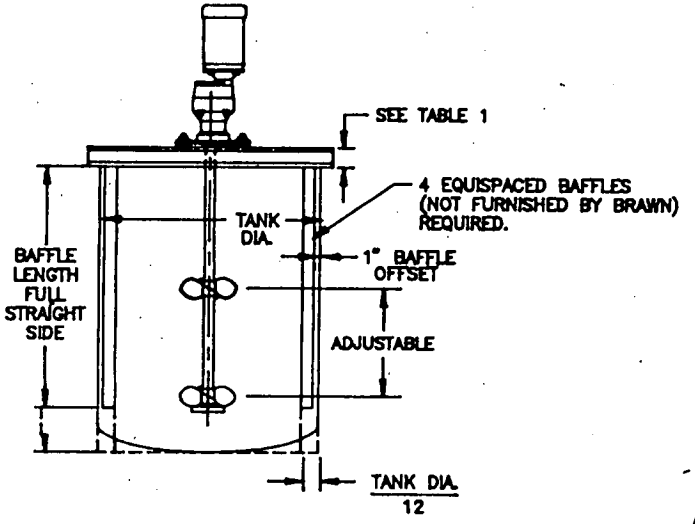

VERTICAL ON CENTER MOUNTING

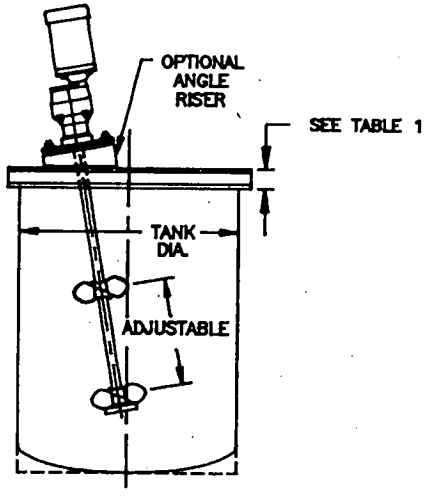

ANGULAR OFF-SET MOUNTING
(SEE TABLE 2 FOR DIMENSIONS)

DESIGN LOADS				RECOMMENDED CHANNEL SIZE	
MIXER MODEL BDF/BGMF	DOWNWARD LOAD (LBS.)	BENDING (IN. LBS.)	TORSIONAL (IN. LBS.)	BEAM SPAN UP TO AND INCL.	
				96"	144"
25	215	4,300	100	C4 x 7.25#	C6 x 8.2#
33	230	4,300	150		
50	245	4,300	200		
75	260	4,300	300		
100	275	4,300	400		
150	360	7,500	600		
200	380	7,500	800		
300	400	8,700	1,200		
500	420	8,700	2,000		

TABLE 1

TANK DIA.	"X"	"Y"
30"	9"	5"
33"	10"	5.5"
36"	11"	6"
39"	11.5"	6.5"
42"	13.5"	7"
45"	14.5"	7.5"
48"	15.5"	8.75"
51"	17"	9.5"
54"	18"	10"
57"	19"	10.5"
60"	20"	11"
63"	21.5"	12"
66"	22.5"	12.5"
69"	23.5"	13"
72"	25"	14"
75"	26"	14.75"
78"	27"	15.5"
81"	28.5"	16.5"
84"	29.5"	17"
90"	31.5"	18"
93"	32.5"	18.5"
96"	34"	19.5"
99"	35"	20"
102"	36"	20.5"
105"	37"	21"
108"	38.5"	22"
111"	39.5"	22.5"
114"	40.5"	23"
117"	42"	24"
120"	43"	24.5"
126"	45.5"	26"
132"	47.5"	27"
138"	50"	28.5"
144"	52"	30"

TABLE 2

NOTES:

1. WARRANTY APPLIES ONLY TO ITEMS FURNISHED BY BRAWN MIXER, INC. ALL OTHER EQUIPMENT AND DESIGNS ARE THE RESPONSIBILITY OF OTHERS. BRAWN MIXER, INC. DOES NOT WARRANT, GUARANTEE, OR ASSUME ANY RESPONSIBILITY FOR THE DESIGN OR CONSTRUCTION OF THE MOUNTING THE MIXER.
2. DESIGN LOADS ARE GREATER THAN ACTUAL LOADS BY A SUITABLE FACTOR TO PROVIDE FOR ADEQUATE DESIGN OF MIXER MOUNTING STRUCTURE.
3. ROUND TANKS REQUIRE BAFFLES AS SHOWN UNLESS OTHERWISE INSTRUCTED BY BRAWN MIXER, INC.

ALL EQUIPMENT DESIGN AND APPLICATION DATA SHOWN HEREIN IS CONFIDENTIAL AND THE PROPERTY OF BRAWN MIXER, INC. NO USE OR DISCLOSURE THEREOF MAY BE MADE WITHOUT OUR WRITTEN PERMISSION.

FILE NO. SDB103A DATE 9-7-94 | 1994

BRAWN MIXER, INC.

MIXER MODEL

BDF & BGMF MOUNTING

DIMENSION AND ASSEMBLY DRAWING

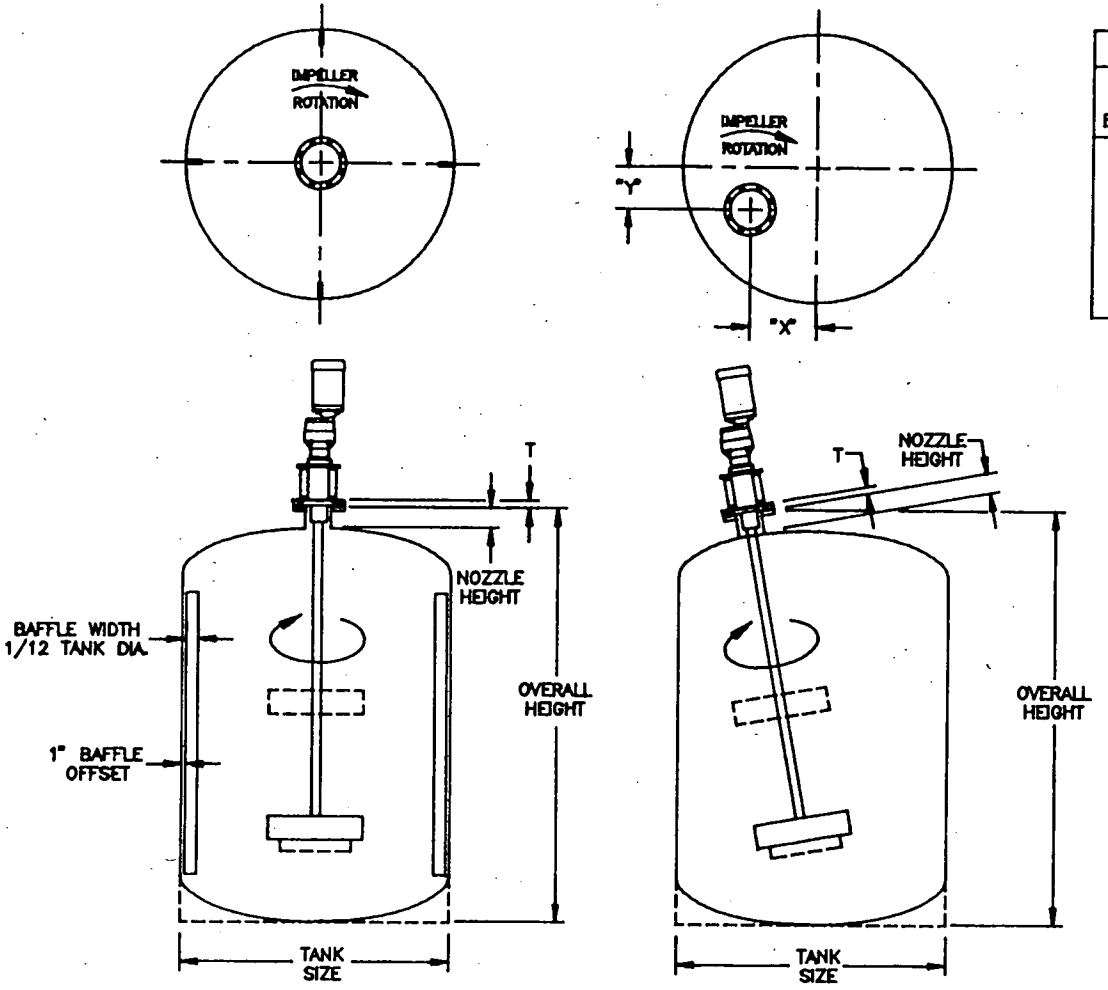

VERTICAL ON CENTER MOUNTING

ANGLE OFF-SET MOUNTING
(SEE TABLE 2 FOR DIMENSIONS)

MOUNTING HOLE DIMENSIONS							DESIGN LOADS		
MIXER MODEL BD/BGM	150 LB. ANSI FLANGE DRILLING						DOWNWARD LOAD (LBS.)	BENDING (IN. LBS.)	TORSIONAL (IN. LBS.)
	ANSI SIZE	O.D.	BOLT CIRC.	NO. HOLES	BOLT DIA.	T			
25	6	11.0	9.50	8	.75	1.63	320	4,300	100
33	6	11.0	9.50	8	.75	1.63	335	4,300	150
50	6	11.0	9.50	8	.75	1.63	350	4,300	200
75	6	11.0	9.50	8	.75	1.63	365	4,300	300
100	6	11.0	9.50	8	.75	1.63	380	4,300	400
150	8	13.5	11.75	8	.75	1.88	500	7,500	600
200	8	13.5	11.75	8	.75	1.88	520	7,500	800
300	8	13.5	11.75	8	.75	1.88	540	8,700	1,200
500	8	13.5	11.75	8	.75	1.88	560	8,700	2,000

TABLE 1

TANK DIA.	"X"	"Y"
30"	9"	5"
33"	10"	5.5"
36"	11"	6"
39"	11.5"	6.5"
42"	13.5"	7"
45"	14.5"	7.5"
48"	15.5"	8.75"
51"	17"	9.5"
54"	18"	10"
57"	19"	10.5"
60"	20"	11"
63"	21.5"	12"
66"	22.5"	12.5"
69"	23.5"	13"
72"	25"	14"
75"	26"	14.75"
78"	27"	15.5"
81"	28.5"	16.5"
84"	29.5"	17"
90"	31.5"	18"
93"	32.5"	18.5"
96"	34"	19.5"
99"	35"	20"
102"	36"	20.5"
105"	37"	21"
108"	38.5"	22"
111"	39.5"	22.5"
114"	40.5"	23"
117"	42"	24"
120"	43"	24.5"
126"	45.5"	26"
132"	47.5"	27"
138"	50"	28.5"
144"	52"	30"

TABLE 2

NOTES:

1. WARRANTY APPLIES ONLY TO ITEMS FURNISHED BY BRAWN MIXER, INC. ALL OTHER EQUIPMENT AND DESIGNS ARE THE RESPONSIBILITY OF OTHERS. BRAWN MIXER, INC. DOES NOT WARRANT, GUARANTEE, OR ASSUME ANY RESPONSIBILITY FOR THE DESIGN OR CONSTRUCTION OF THE MOUNTING STRUCTURE FOR THE MIXER.
2. DESIGN LOADS ARE GREATER THAN ACTUAL LOADS BY A SUITABLE FACTOR TO PROVIDE FOR ADEQUATE DESIGN OF MIXER MOUNTING STRUCTURE.
3. ROUND TANKS REQUIRE BAFFLES AS SHOWN, UNLESS OTHERWISE INSTRUCTED BY BRAWN MIXER, INC.
4. DESIGN LOAD AND NOZZLE MOUNTING INFORMATION, FOR CLOSED TANK INSTALLATION, IS APPLICABLE FOR BOTH STUFFING BOX AND MECHANICAL SEAL MIXERS.
5. FLANGE SIZES LARGER THAN STANDARD ARE AVAILABLE AS AN OPTION.

ALL EQUIPMENT DESIGN AND APPLICATION DATA SHOWN HEREIN IS CONFIDENTIAL AND THE PROPERTY OF BRAWN MIXER, INC. NO USE OR DISCLOSURE THEREOF MAY BE MADE WITHOUT OUR WRITTEN PERMISSION.

FILE NO. SDB101A DATE 9-7-94 ©1994

BRAWN MIXER, INC.

MIXER MODEL

BD & BGM ANSI FLANGE MOUNT

DIMENSION AND ASSEMBLY DRAWING

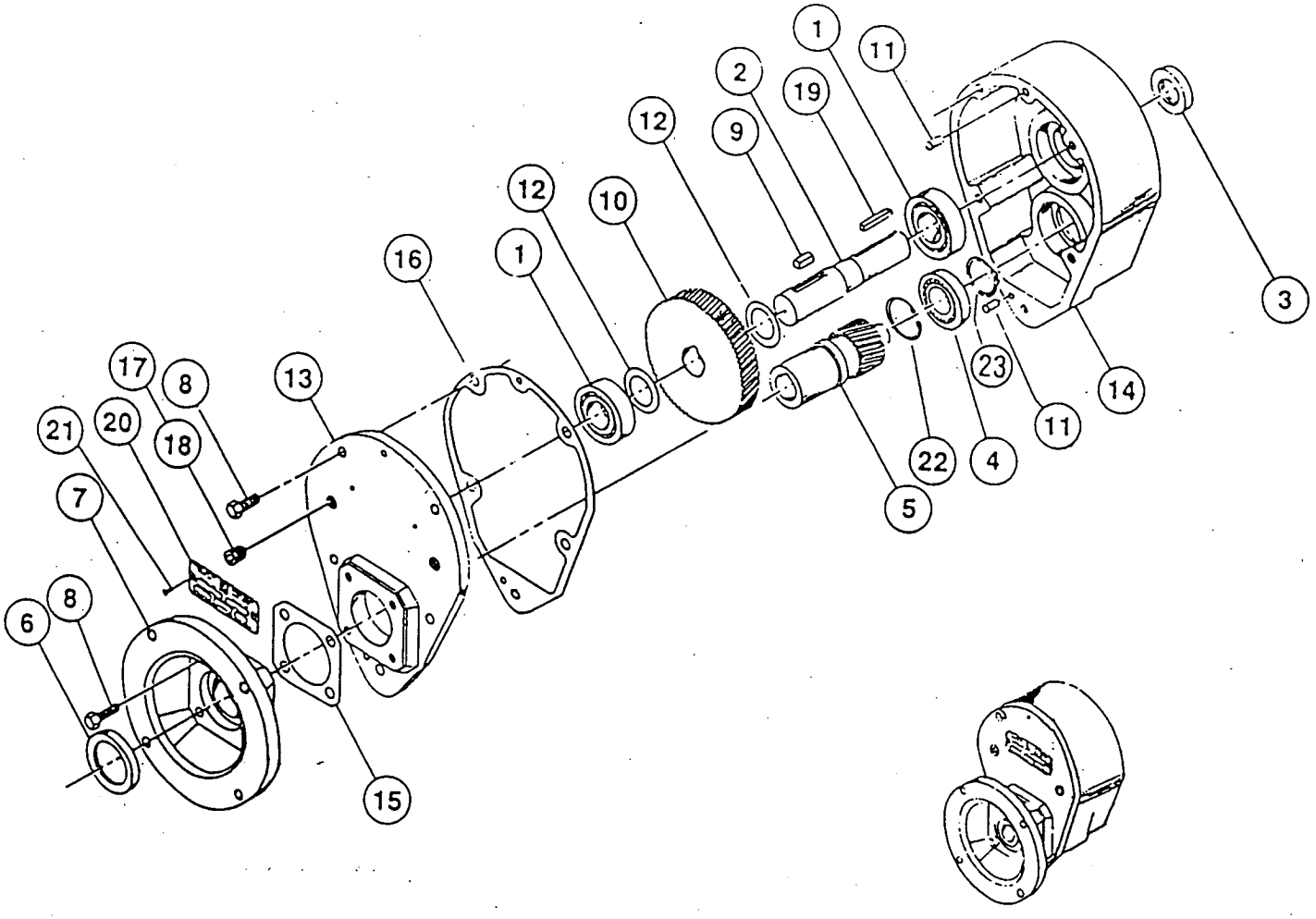

1. Bearing, Output (Ball) — 2 req.
2. Shaft, Output (state output frame size)
3. Seal, Oil (Output)
4. Bearing, Input (Ball)
5. Shaft, Input
6. Seal, Oil (Input)
7. Flange, Motor
8. Screw
9. Key, Gear
10. Gear, Output
11. Pin, Dowel — 2 req.
12. Spacer, Low Speed — 2 req.
13. Cover, Housing
14. Housing, Gear
15. Gasket, Input cover
16. Gasket, Housing
17. Plug, Pipe — 2 req.
18. Plug, Vent
19. Key, Output Shaft
20. Plate, specification
21. Screw, Drive (spec. plate) — 2 req.
22. Ring, Retaining, Internal, Input Shaft
23. Ring, Retaining, External, Input Shaft

BRAWN™
MIXER, INC.

OPERATION & MAINTENANCE MANUAL

12764 Greenly Street ▪ Holland, MI 49424 Phone: 616/399-5600 ▪ Fax: 616/399-3084

CONTENTS

Mixer Installation / Assembly / Dimension Drawings
Customer Service Contact 1
Initial Inspection 1
Safety 2
Installation 2-3
Lubrication 4
Storage 4
Warranty 5

CUSTOMER SERVICE

Mixer Model # . . . . . BGM-SERIES
Mixer Serial #_____
Contact:
☛ Customer Service 616/399-5600

You have received a quality engineered and manufactured BRAWN Mixer. We value your business, and we will strive to provide you with the proper service and equipment to meet your needs.

The information contained in this BRAWN Mixer Operator's Manual is designed to assist you in putting your BRAWN Mixer into operation without further delay. **Please read the entire manual before attempting to start your mixer.** If you have any further questions or if, by some chance, there are some missing components, contact your BRAWN Mixer Representative or the factory immediately.

We welcome your comments and suggestions concerning any BRAWN Mixer product. Please direct these comments in writing to the National Sales Manager at BRAWN Mixer, Inc., located in Holland, Michigan. To expedite troubleshooting service, please make your initial contact through your BRAWN Mixer Representative. If, for whatever reason, your representative cannot be reached and you have an emergency condition, please call us directly at 616/399-5600 and ask for the Customer Service Department.

Remember, you are backed by your BRAWN Mixer Technical representative and the factory support team. We are here to assist you; let us know how we can be of help.

INITIAL INSPECTION

1. Upon receipt of your BRAWN Mixer, check for possible shipping damage. Report any damage immediately to the carrier and to BRAWN Mixer, Inc.

2. All BRAWN Mixers are shipped with the shaft and impeller(s) disassembled from the drive assembly. In addition, the clamp or cup mount and any mounting hardware for portable mixers are shipped loose.

3. Storage: Mixers should not be stored near vibrating machinery to avoid damage to the bearings. Store mixers as packaged by the factory. For longer storage periods, consult factory. If electric motors have been subjected to humid conditions, check the insulation resistance between phase and mass and between the different phases. The resistance should not be less than 100 megohms. If the resistance is less, please consult the factory. If mixer is stored for more than a year, the condition of the gear lubricant should be checked before the mixer is put in operation (see lubrication instructions).

[CONTINUED] →

SAFETY

The precautions mentioned in this manual are not intended to cover all hazards that may exist in a plant or on this equipment. Using safety mechanisms requires the constant attention of everyone in the vicinity of this (or any) equipment.

A plant and the related equipment are only as safe as the personnel are safety-minded. Proper equipment maintenance and the use of personal safety devices will contribute as much toward safety as will any number of mechanical safety devices.

- To assure maximum safety, optimum performance, and to gain knowledge of the product, it is essential that you or any other operator of this equipment read and understand the contents of this manual before the mixer is operated.
- Do not operate this equipment unless all safety devices are working properly. Check all devices prior to starting the equipment.
- Develop a safety checklist for this equipment and perform regular maintenance to ensure continued and proper operation.
- Disconnect and lock out electrical power before servicing the mixer.
- Do not touch rotating parts.
- Do not make any field changes or modifications without reviewing the change with your BRAWN sales representative or the BRAWN Customer Service Department.

INSTALLATION

[REFER TO ASSEMBLY / DIMENSION DRAWING.]

Refer to the mixer installation / assembly drawing for important mounting structure design, assembly, mounting and dimensional data.

1. Models BD and BGM portable mixers are designed with handles incorporated in the mounting base. These are intended for lifting of the mixer assembly.

2. For clamp-mount units, install the mixer drive on the mounting structure and secure by tightening the clamp screw.

   - For fixed-mount and cup plate mount mixers, install the mixer drive on the mounting structure and secure with properly-sized, Grade 5 or better hardware. Torque the hardware as recommended in **TABLE 1**.

3. Install the impeller(s) on the mixer shaft by carefully sliding the impeller hub over the shaft to its proper location and tighten the set screws.

4. Install mixer shaft [16] by inserting the end with machined groove into the chuck driveshaft [14]. (It is recommended that the mixer shaft portion engaged in chuck driveshaft be coated with an anti-seize compound.) Tighten setscrews [15] to secure shaft.

   - If optional rigid shaft coupling [25] is furnished, connect the mixer shaft [26] and rigid driveshaft couplings by carefully engaging the shaft rabbeted faces and installing the mounting hardware [26 & 27]. Be careful not to damage the coupling faces or rabbets, as this can cause excessive shaft runout that will affect the life of the mixer.

TABLE 1: RECOMMENDED TORQUE VALUES

HARDWARE SIZE	TORQUE VALUES (FOOT POUNDS)	
	STANDARD GRADE 2 & 300 SERIES STAINLESS	HIGH STRENGTH GRADES 5 & 8
3/8 — 16	17	27
7/16 — 14	27	40
1/2 — 13	40	65
9/16 — 12	65	90
5/8 — 11	85	125
3/4 — 10	135	225
7/8 — 9	145	365
1 — 8	210	545

[CONTINUED] →

INSTALLATION CONTINUED...

BOLT-TIGHTENING RECOMMENDATIONS: Inadequately or improperly tightened hardware can loosen due to vibration during mixer operation. This can result in reduced mixer life or damage to equipment. Recommended torques for tightening all in-tank and mounting hardware are listed in **TABLE 1** [Page 2]. These average torque values should be considered only as guides and not as absolute values.

The following guidelines are based on mixing in vertical cylindrical tanks with flat, dished, or shallow cone bottoms. Mixer installations may vary with tank shape, retention times, starting conditions and other requirements.

1. For liquid levels 0.5 to 1.1 times the tank diameter, a single impeller is suitable.
2. For liquid levels 1.1 to 1.6 times the tank diameter, use dual impellers.
3. Impellers may be located from 0.5 to 2.0 impeller diameters off the tank bottom, with one diameter off bottom being optimum.
4. When dual impellers are necessary, spacing between impellers should be approximately two impeller diameters with gear drives, and four to five impeller diameters with direct drive mixers.
5. Mixer position in tank should be as shown in **FIGURE A** [below] for maximum turnover of liquid.

FIGURE A

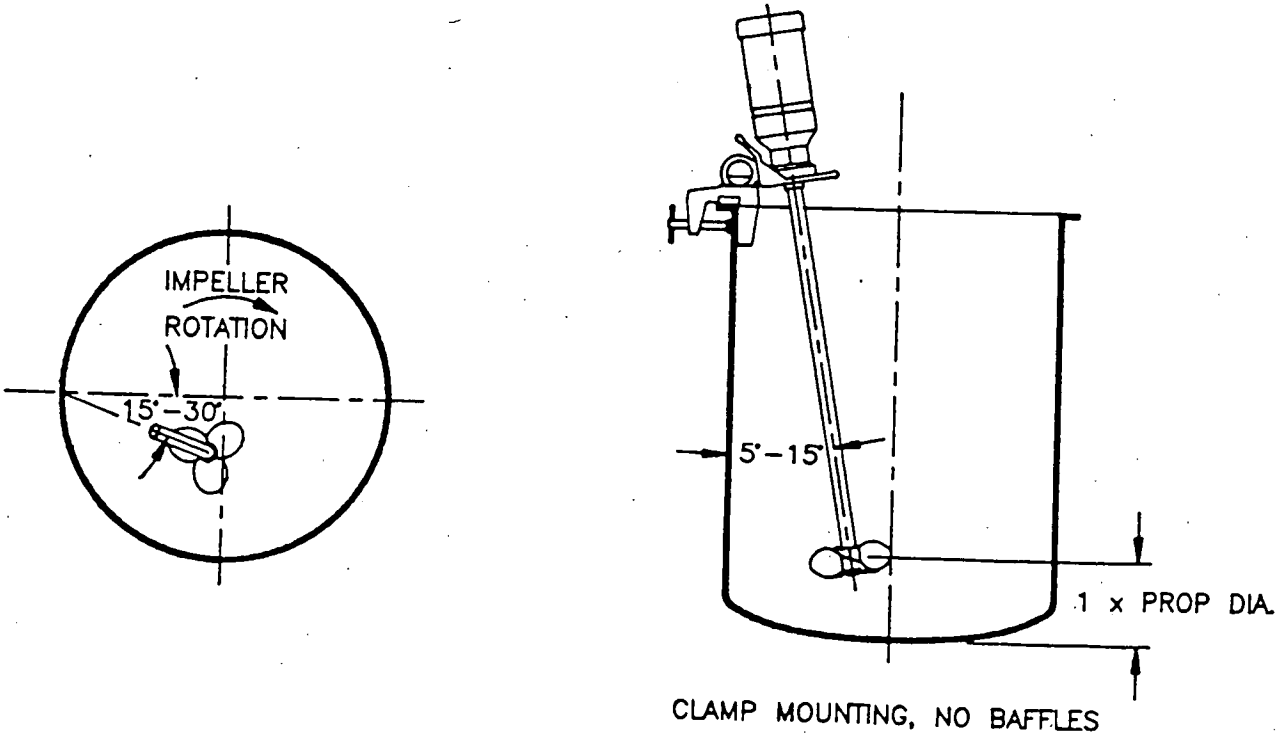

[CONTINUED] →

LUBRICATION

Gear boxes are lubricated for life. If the application calls for outdoor installation in extremely cold or extremely warm temperatures, or in corrosive environments, consult the factory.

STORAGE

Units shipped from BRAWN Mixer, Inc. are intended to be used within 30 days after receipt and presumed to be stored indoors in a heated building. If you intend storing units under adverse conditions or for a long period of time, special storage precautions will be necessary.

1. Store in a sheltered area away from chemical vapors or steam.
2. Cover.
3. Do not store in sunlight or near high heat.
4. Spray oil on exposed shafts and seals. Remove oil on start-up.
5. Rotate output shaft 360° every 3-4 weeks.

[CONTINUED] →

WARRANTY

LIMITED WARRANTY: All equipment or parts covered by this manual are free from defective material and workmanship, under normal use and service for a period of eighteen (18) months from date of purchase. This warranty does not cover failure of normal wear parts unless the failure of such part has resulted from defective material and workmanship. BRAWN Mixer, Inc. will repair or replace, at its option, any equipment which has been found to be defective and is within the warranty period, provided that the equipment is shipped, with previous factory authorization, freight prepaid, to BRAWN's plant in Holland, Michigan, USA. All return shipments are made FOB BRAWN's factory. BRAWN is not responsible for removal, installation, or any other incidental expenses incurred in shipping the equipment to or from BRAWN. In the case of components purchas d by BRAWN Mixer, Inc. and incorporated in the equipment, the component manufacturer's guarantee shall apply. NOTE: Any modifications or corrective work done to the equipment which were not specifically authorized in writing by BRAWN Mixer, Inc. shall void this limited warranty, and BRAWN Mixer, Inc. shall accept no liability for any of the corrective work or expenditures which were conducted without their prior, written authorization. BRAWN Mixer, Inc. shall not be held liable for any further cost, expense, or labor to replace equipment or replaceable parts, or indirect or consequential damages.

With the exceptions of the limited warranty set out above, there are no other understandings, agreements, representatives, or warranties implied (including any regarding the merchant-ability or fitness for a particular purpose), not specified herein, respecting this agreement or equipment, hereunder. This contract states the entire obligation of BRAWN Mixer, Inc. in connection with this transaction.

SHOULD WE MAKE A MISTAKE...

BRAWN Mixer, Inc.'s Direct Returns Policy

To ensure proper handling of your return, please take a moment to read the following:

- **ALL** returns require a **RETURN GOODS AUTHORIZATION (RGA) NUMBER**. We are unable to process your return or issue proper credit without an approved **RGA** number.
- **ALL** returns must be **COMPLETE**, including all original warranties, manuals, documentation and packaging.
- **ALL** product must be received within 20 days of issuing an **RGA** number.

How to Return Product

You must have a **RETURN GOODS AUTHORIZATION (RGA)** number before you return any product to BRAWN Mixer, Inc. To obtain this number, call **616/399-5600** and ask for Customer Service. Be sure to have available the following information:

- your order number
- your customer number
- the BRAWN product serial number
- the part number and description of the product
- the reason for the return

★ IMPORTANT ★

The Return Goods Authorization number must be written clearly on all boxes being returned. C.O.D. shipments will not be accepted.

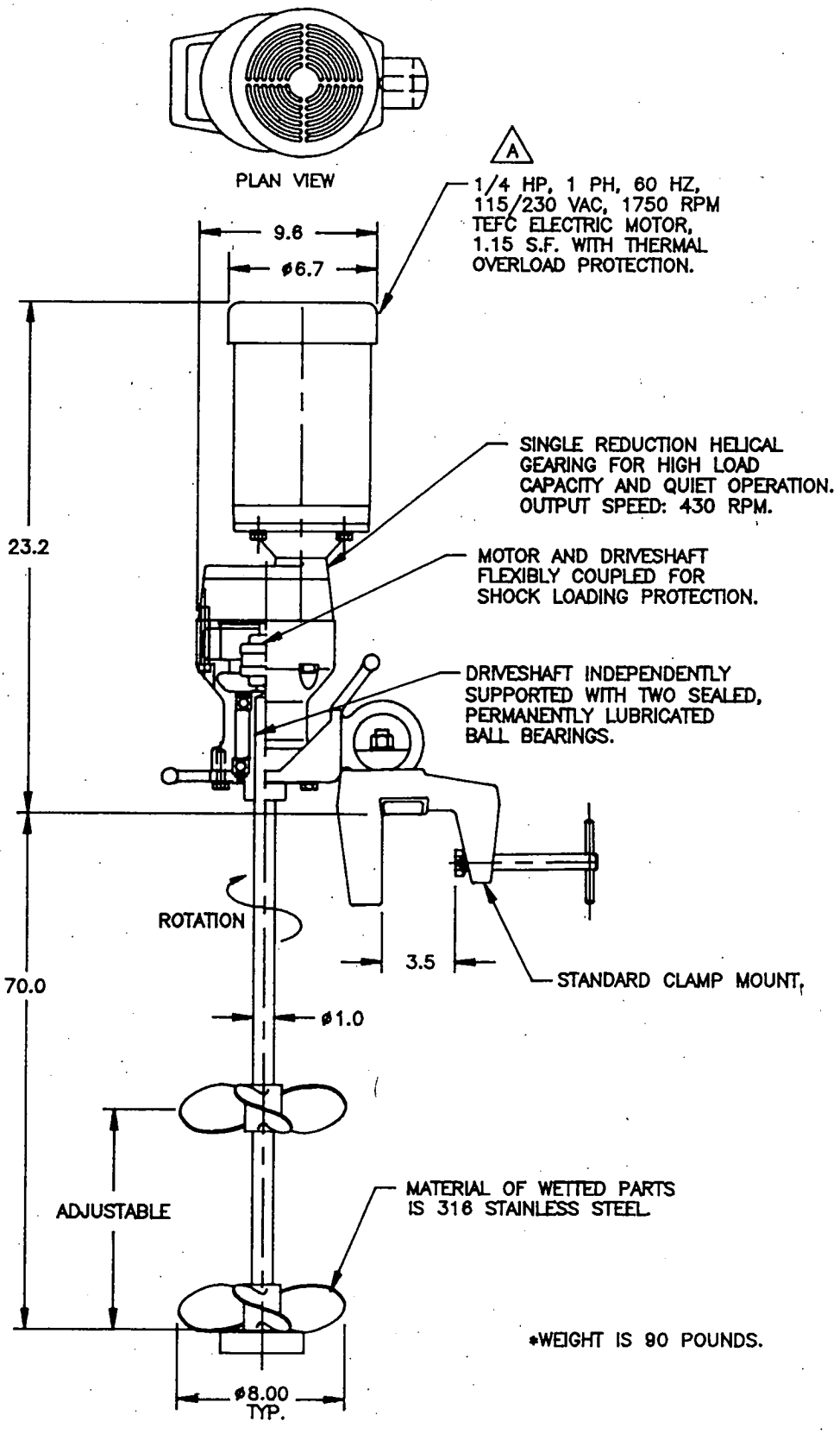

REV.A 1-27-95 WAS 3 PHASE

EQUALIZATION TANK #1
AND WETWELL #5

ALL EQUIPMENT DESIGN AND APPLICATION DATA SHOWN HEREIN IS CONFIDENTIAL AND THE PROPERTY OF BRAWN MIXER, INC. NO USE OR DISCLOSURE THEREOF MAY BE MADE WITHOUT OUR WRITTEN PERMISSION.

FILE NO.94116001 DATE 10-26-94 ©1994

BRAWN™ MIXER, INC.
HOLLAND, MI. 49424
PH. 616-399-5600
FAX 616-399-3084

MIXER MODEL
BGM25 GEAR DRIVE
REM SITES NASB, BRUNSWICK, ME
CONTRACT #: N624772-91-C-0034
DIMENSION AND ASSEMBLY DRAWING

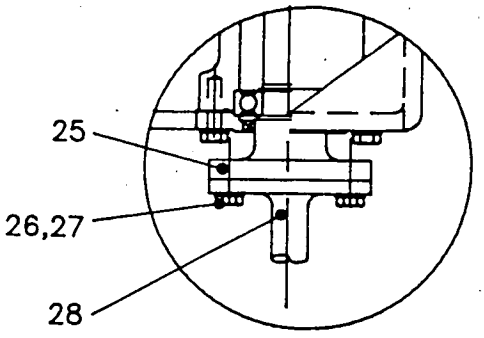

OPTIONAL
RIGID SHAFT
COUPLING

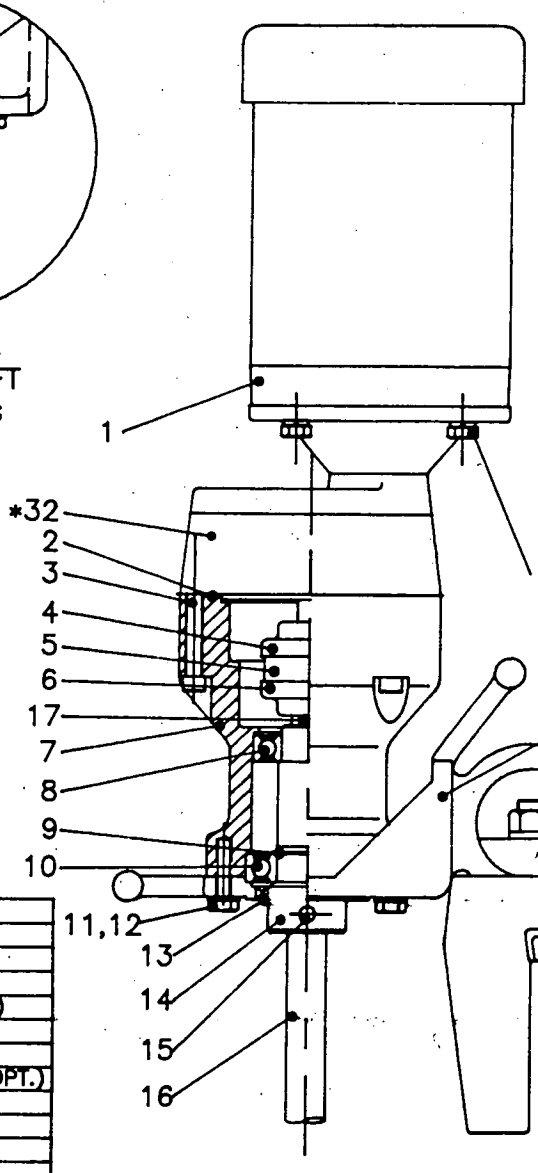

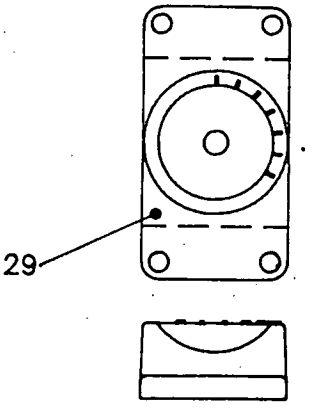

OPTIONAL BEAM
MOUNTING PLATE

*REFER TO GEARBOX ASSEMBLY DRAWING

ITEM NO.	QTY.	PART NAME
32	1	GEARBOX
31	4	LOCK WASHER
30	4	HEX HEAD CAP SCREW
29	1	MOUNTING PLATE (OPT.)
28	N	RIGID FLANGE SHAFT (OPT.)
27	4	LOCK WASHER
26	4	HEX HEAD CAP SCREW
25	1	RIGID FLANGE COUPLING (OPT.)
24	1	CLAMP ASSEMBLY
23	1	SHOE
22	1	FLAT WASHER
21	1	LOCK WASHER
20	1	NUT
19	1	BOLT
18	1	BALL MOUNT
17	1	KEY
16	1	MIXER SHAFT
15	2	SET SCREW
14	1	CHUCK SHAFT
13	1	OIL SEAL
12	6	LOCK WASHER
11	6	HEX HEAD CAP SCREW
10	1	BALL BEARING
9	1	SNAP RING
8	1	BALL BEARING
7	1	HOUSING
6	1	COUPLING HUB
5	1	SLEEVE
4	1	COUPLING HUB
3	4	SOCKET HEAD CAP SCREW
2	1	O-RING
1	1	MOTOR

ALL EQUIPMENT DESIGN AND APPLICATION DATA SHOWN HEREIN IS CONFIDENTIAL AND THE PROPERTY OF BRAWN MIXER, INC. NO USE OR DISCLOSURE THEREOF MAY BE MADE WITHOUT OUR WRITTEN PERMISSION.

FILE NO. 109303 DATE 10-17-93 ©1993

BRAWN™ MIXER, INC.
HOLLAND, MI. 49424
PH. 616-399-5600
FAX 616-399-3084

MIXER MODEL
BGM33 THRU 200
GEAR DRIVE

ASSEMBLY DRAWING

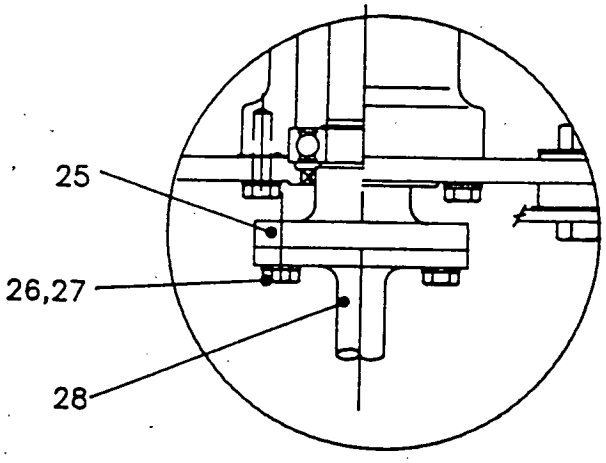

OPTIONAL
RIGID SHAFT
COUPLING

*REFER TO GEARBOX ASSEMBLY DRAWING

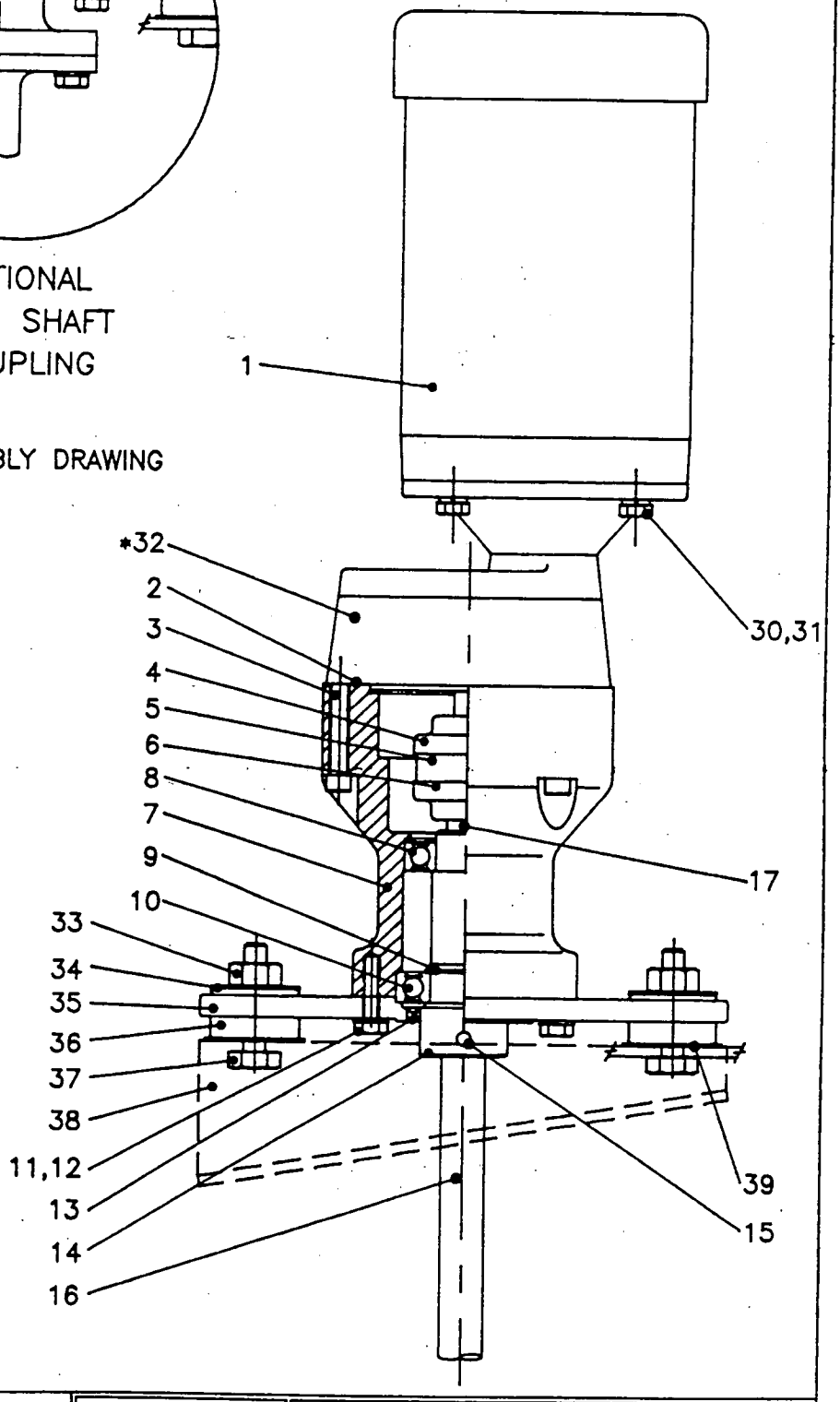

ITEM NO.	QTY.	PART NAME
39	4	HEAD WASHER
38	2	ANGLE RISERS (OPTIONAL)
37	4	BOLT
36	4	ISOLATION MOUNT
35	1	MOUNTING PLATE
34	4	TAIL WASHER
33	4	NUT
32	1	GEARBOX
31	4	LOCK WASHER
30	4	HEX HEAD CAP SCREW
28	1	RIGID FLANGE SHAFT (OPT.)
27	4	LOCK WASHER
26	4	HEX HEAD CAP SCREW
25	1	RIGID FLANGE COUPLING (OPT.)
17	1	KEY
16	1	MIXER SHAFT
15	2	SET SCREW
14	1	CHUCK SHAFT
13	1	OIL SEAL
12	6	LOCK WASHER
11	6	HEX HEAD CAP SCREW
10	1	BALL BEARING
9	1	SNAP RING
8	1	BALL BEARING
7	1	HOUSING
6	1	COUPLING HUB
5	1	SLEEVE
4	1	COUPLING HUB
3	4	SOCKET HEAD CAP SCREW
2	1	O-RING
1	1	MOTOR

ALL EQUIPMENT DESIGN AND APPLICATION DATA SHOWN HEREIN IS CONFIDENTIAL AND THE PROPERTY OF BRAWN MIXER, INC. NO USE OR DISCLOSURE THEREOF MAY BE MADE WITHOUT OUR WRITTEN PERMISSION.

FILE NO. 109304 DATE 10-19-93 ©1993

BRAWN™ MIXER, INC.
HOLLAND, MI. 49424
PH. 616-399-5600
FAX 616-399-3084

MIXER MODEL BGMF33 THRU 200 GEAR DRIVE

ASSEMBLY DRAWING

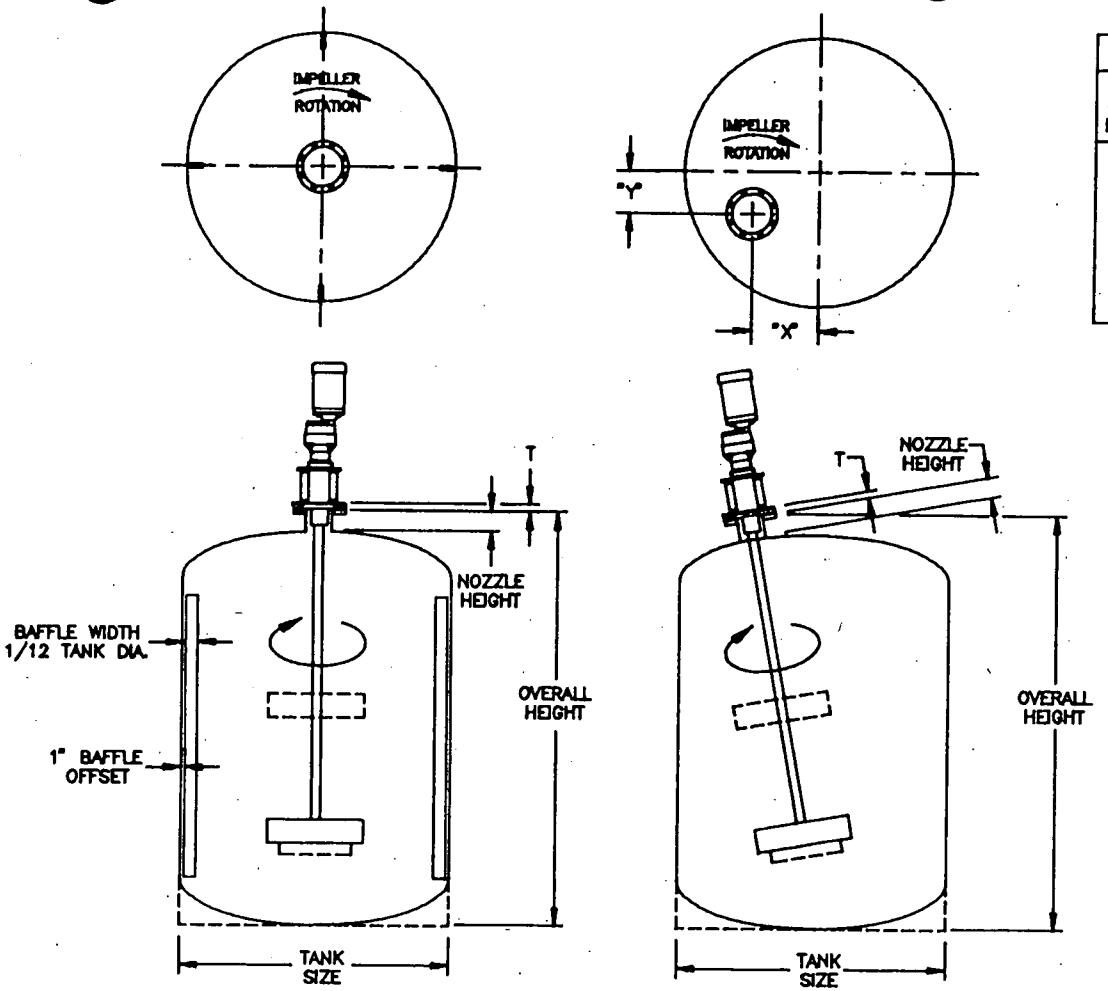

VERTICAL ON CENTER MOUNTING

ANGLE OFF-SET MOUNTING
(SEE TABLE 2 FOR DIMENSIONS)

MOUNTING HOLE DIMENSIONS							DESIGN LOADS		
MIXER MODEL BD/BGM	150 LB. ANSI FLANGE DRILLING						DOWNWARD LOAD (LBS.)	BENDING (IN. LBS.)	TORSIONAL (IN. LBS.)
	ANSI SIZE	O.D.	BOLT CIRC.	NO. HOLES	BOLT DIA.	T			
25	6	11.0	9.50	8	.75	1.63	320	4,300	100
33	6	11.0	9.50	8	.75	1.63	335	4,300	150
50	6	11.0	9.50	8	.75	1.63	350	4,300	200
75	6	11.0	9.50	8	.75	1.63	365	4,300	300
100	6	11.0	9.50	8	.75	1.63	380	4,300	400
150	8	13.5	11.75	8	.75	1.88	500	7,500	600
200	8	13.5	11.75	8	.75	1.88	520	7,500	800
300	8	13.5	11.75	8	.75	1.88	540	8,700	1,200
500	8	13.5	11.75	8	.75	1.88	560	8,700	2,000

TABLE 1

TANK DIA.	"X"	"Y"
30"	9"	5"
33"	10"	5.5"
36"	11"	6"
39"	11.5"	6.5"
42"	13.5"	7"
45"	14.5"	7.5"
48"	15.5"	8.75"
51"	17"	9.5"
54"	18"	10"
57"	19"	10.5"
60"	20"	11"
63"	21.5"	12"
66"	22.5"	12.5"
69"	23.5"	13"
72"	25"	14"
75"	26"	14.75"
78"	27"	15.5"
81"	28.5"	16.5"
84"	29.5"	17"
90"	31.5"	18"
93"	32.5"	18.5"
96"	34"	19.5"
99"	35"	20"
102"	36"	20.5"
105"	37"	21"
108"	38.5"	22"
111"	39.5"	22.5"
114"	40.5"	23"
117"	42"	24"
120"	43"	24.5"
126"	45.5"	26"
132"	47.5"	27"
138"	50"	28.5"
144"	52"	30"

TABLE 2

NOTES:

1. WARRANTY APPLIES ONLY TO ITEMS FURNISHED BY BRAWN MIXER, INC. ALL OTHER EQUIPMENT AND DESIGNS ARE THE RESPONSIBILITY OF OTHERS. BRAWN MIXER, INC. DOES NOT WARRANT, GUARANTEE, OR ASSUME ANY RESPONSIBILITY FOR THE DESIGN OR CONSTRUCTION OF THE MOUNTING STRUCTURE FOR THE MIXER.
2. DESIGN LOADS ARE GREATER THAN ACTUAL LOADS BY A SUITABLE FACTOR TO PROVIDE FOR ADEQUATE DESIGN OF MIXER MOUNTING STRUCTURE.
3. ROUND TANKS REQUIRE BAFFLES AS SHOWN, UNLESS OTHERWISE INSTRUCTED BY BRAWN MIXER, INC.
4. DESIGN LOAD AND NOZZLE MOUNTING INFORMATION, FOR CLOSED TANK INSTALLATION, IS APPLICABLE FOR BOTH STUFFING BOX AND MECHANICAL SEAL MIXERS.
5. FLANGE SIZES LARGER THAN STANDARD ARE AVAILABLE AS AN OPTION.

ALL EQUIPMENT DESIGN AND APPLICATION DATA SHOWN HEREIN IS CONFIDENTIAL AND THE PROPERTY OF BRAWN MIXER, INC. NO USE OR DISCLOSURE THEREOF MAY BE MADE WITHOUT OUR WRITTEN PERMISSION.

FILE NO. SDB101A DATE 9-7-94 ©1994

BRAWN MIXER, INC.

MIXER MODEL

BD & BGM ANSI FLANGE MOUNT

DIMENSION AND ASSEMBLY DRAWING

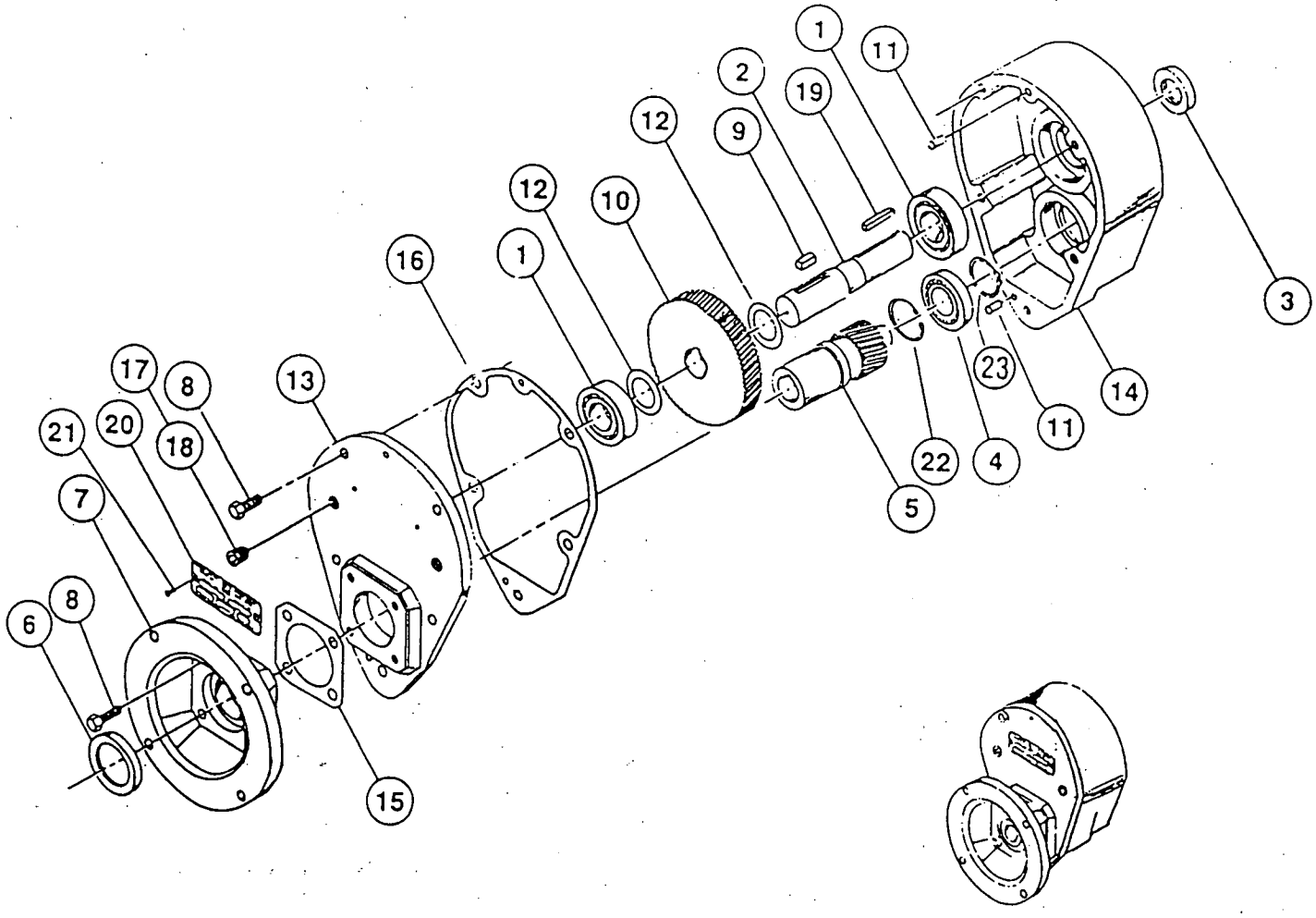

1. Bearing, Output (Ball) — 2 req.
2. Shaft, Output (state output frame size)
3. Seal, Oil (Output)
4. Bearing, Input (Ball)
5. Shaft, Input
6. Seal, Oil (Input)
7. Flange, Motor
8. Screw
9. Key, Gear
10. Gear, Output
11. Pin, Dowel — 2 req.
12. Spacer, Low Speed — 2 req.
13. Cover, Housing
14. Housing, Gear
15. Gasket, Input cover
16. Gasket, Housing
17. Plug, Pipe — 2 req.
18. Plug, Vent
19. Key, Output Shaft
20. Plate, specification
21. Screw, Drive (spec. plate) — 2 req.
22. Ring, Retaining, Internal, Input Shaft
23. Ring, Retaining, External, Input Shaft

BRAWN™
MIXER, INC.
12764 Greenly Street ▪ Holland, MI 49424
Phone: 616/399-5600 ▪ Fax: 616/399-3084

OPERATION & MAINTENANCE MANUAL

CONTENTS

Mixer Installation / Assembly / Dimension Drawings
Customer Service Contact 1
Initial Inspection 1
Safety 2
Installation 2-3
Lubrication 4
Storage 4
Warranty 5

CUSTOMER SERVICE

Mixer Model # . . . . . BGM-SERIES
Mixer Serial #_____
Contact:
☛ Customer Service 616/399-5600

You have received a quality engineered and manufactured BRAWN Mixer. We value your business, and we will strive to provide you with the proper service and equipment to meet your needs.

The information contained in this BRAWN Mixer Operator's Manual is designed to assist you in putting your BRAWN Mixer into operation without further delay. **Please read the entire manual before attempting to start your mixer.** If you have any further questions or if, by some chance, there are some missing components, contact your BRAWN Mixer Representative or the factory immediately.

We welcome your comments and suggestions concerning any BRAWN Mixer product. Please direct these comments in writing to the National Sales Manager at BRAWN Mixer, Inc., located in Holland, Michigan. To expedite troubleshooting service, please make your initial contact through your BRAWN Mixer Representative. If, for whatever reason, your representative cannot be reached and you have an emergency condition, please call us directly at 616/399-5600 and ask for the Customer Service Department.

Remember, you are backed by your BRAWN Mixer Technical representative and the factory support team. We are here to assist you; let us know how we can be of help.

INITIAL INSPECTION

1. Upon receipt of your BRAWN Mixer, check for possible shipping damage. Report any damage immediately to the carrier and to BRAWN Mixer, Inc.

2. All BRAWN Mixers are shipped with the shaft and impeller(s) disassembled from the drive assembly. In addition, the clamp or cup mount and any mounting hardware for portable mixers are shipped loose.

3. Storage: Mixers should not be stored near vibrating machinery to avoid damage to the bearings. Store mixers as packaged by the factory. For longer storage periods, consult factory. If electric motors have been subjected to humid conditions, check the insulation resistance between phase and mass and between the different phases. The resistance should not be less than 100 megohms. If the resistance is less, please consult the factory. If mixer is stored for more than a year, the condition of the gear lubricant should be checked before the mixer is put in operation (see lubrication instructions).

[CONTINUED] →

SAFETY

The precautions mentioned in this manual are not intended to cover all hazards that may exist in a plant or on this equipment. Using safety mechanisms requires the constant attention of everyone in the vicinity of this (or any) equipment.

A plant and the related equipment are only as safe as the personnel are safety-minded. Proper equipment maintenance and the use of personal safety devices will contribute as much toward safety as will any number of mechanical safety devices.

- To assure maximum safety, optimum performance, and to gain knowledge of the product, it is essential that you or any other operator of this equipment read and understand the contents of this manual before the mixer is operated.
- Do not operate this equipment unless all safety devices are working properly. Check all devices prior to starting the equipment.
- Develop a safety checklist for this equipment and perform regular maintenance to ensure continued and proper operation.
- Disconnect and lock out electrical power before servicing the mixer.
- Do not touch rotating parts.
- Do not make any field changes or modifications without reviewing the change with your BRAWN sales representative or the BRAWN Customer Service Department.

INSTALLATION

[REFER TO ASSEMBLY / DIMENSION DRAWING.]

Refer to the mixer installation / assembly drawing for important mounting structure design, assembly, mounting and dimensional data.

1. Models BD and BGM portable mixers are designed with handles incorporated in the mounting base. These are intended for lifting of the mixer assembly.

2. For clamp-mount units, install the mixer drive on the mounting structure and secure by tightening the clamp screw.

   - For fixed-mount and cup plate mount mixers, install the mixer drive on the mounting structure and secure with properly-sized, Grade 5 or better hardware. Torque the hardware as recommended in TABLE 1.

3. Install the impeller(s) on the mixer shaft by carefully sliding the impeller hub over the shaft to its proper location and tighten the set screws.

4. Install mixer shaft [16] by inserting the end with machined groove into the chuck driveshaft [14]. (It is recommended that the mixer shaft portion engaged in chuck driveshaft be coated with an anti-seize compound.). Tighten setscrews [15] to secure shaft.

   - If optional rigid shaft coupling [25] is furnished, connect the mixer shaft [26] and rigid driveshaft couplings by carefully engaging the shaft rabbeted faces and installing the mounting hardware [26 & 27]. Be careful not to damage the coupling faces or rabbets, as this can cause excessive shaft runout that will affect the life of the mixer.

TABLE 1: RECOMMENDED TORQUE VALUES

HARDWARE SIZE	TORQUE VALUES (FOOT POUNDS)	
	STANDARD GRADE 2 & 300 SERIES STAINLESS	HIGH STRENGTH GRADES 5 & 8
3/8 — 16	17	27
7/16 — 14	27	40
1/2 — 13	40	65
9/16 — 12	65	90
5/8 — 11	85	125
3/4 — 10	135	225
7/8 — 9	145	365
1 — 8	210	545

[CONTINUED] →

INSTALLATION CONTINUED...

BOLT-TIGHTENING RECOMMENDATIONS: Inadequately or improperly tightened hardware can loosen due to vibration during mixer operation. This can result in reduced mixer life or damage to equipment. Recommended torques for tightening all in-tank and mounting hardware are listed in **TABLE 1** [Page 2]. These average torque values should b considered only as guides and not as absolute values.

The following guidelines are based on mixing in vertical cylindrical tanks with flat, dished, or shallow cone bottoms. Mixer installations may vary with tank shape, retention times, starting conditions and other requirements.

1. For liquid levels 0.5 to 1.1 times the tank diameter, a single impeller is suitable.
2. For liquid levels 1.1 to 1.6 times the tank diameter, use dual impellers.
3. Impellers may be located from 0.5 to 2.0 impeller diameters off the tank bottom, with one diameter off bottom being optimum.
4. When dual impellers are necessary, spacing between impellers should be approximately two impeller diameters with gear drives, and four to five impeller diameters with direct drive mixers.
5. Mixer position in tank should be as shown in **FIGURE A** [below] for maximum turnover of liquid.

FIGURE A

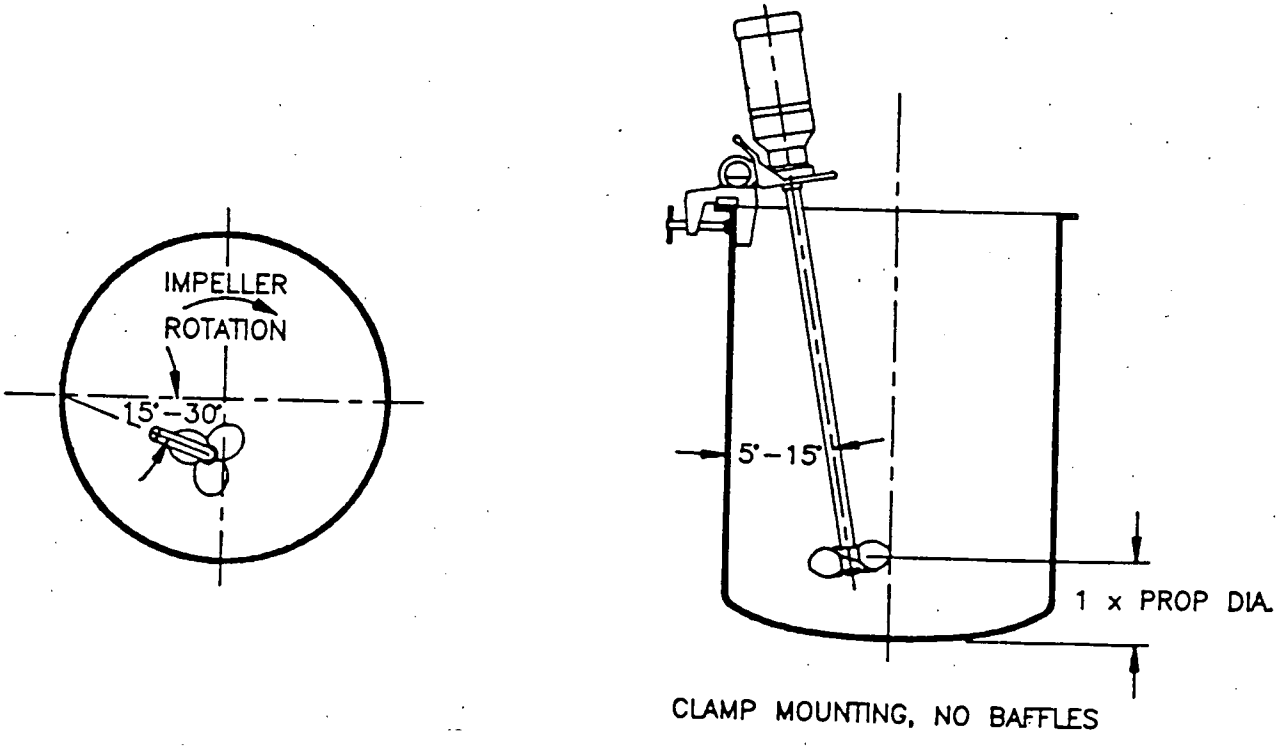

[CONTINUED] →

LUBRICATION

Gear boxes are lubricated for life. If the application calls for outdoor installation in extremely cold or xtremely warm temperatures, or in corrosive nvironments, consult the factory.

STORAGE

Units shipped from BRAWN Mixer, Inc. are intended to be used within 30 days after receipt and presumed to be stored indoors in a heated building. If you intend storing units under adverse conditions or for a long period of time, special storage precautions will be necessary.

1. Store in a sheltered area away from chemical vapors or steam.
2. Cover.
3. Do not store in sunlight or near high heat.
4. Spray oil on exposed shafts and seals. Remove oil on start-up.
5. Rotate output shaft 360° every 3-4 weeks.

[CONTINUED] →

WARRANTY

LIMITED WARRANTY: All equipment or parts covered by this manual are free from defective material and workmanship, under normal use and service for a period of eighteen (18) months from date of purchase. This warranty does not cover failure of normal wear parts unless the failure of such part has resulted from defective material and workmanship. BRAWN Mixer, Inc. will repair or replace, at its option, any equipment which has been found to be defective and is within the warranty period, provided that the equipment is shipped, with previous factory authorization, freight prepaid, to BRAWN's plant in Holland, Michigan, USA. All return shipments are made FOB BRAWN's factory. BRAWN is not responsible for removal, installation, or any other incidental expenses incurred in shipping the equipment to or from BRAWN. In the case of components purchased by BRAWN Mixer, Inc. and incorporated in the equipment, the component manufacturer's guarantee shall apply. NOTE: Any modifications or corrective work done to the equipment which were not specifically authorized in writing by BRAWN Mixer, Inc. shall void this limited warranty, and BRAWN Mixer, Inc. shall accept no liability for any of the corrective work or expenditures which were conducted without their prior, written authorization. BRAWN Mixer, Inc. shall not be held liable for any further cost, expense, or labor to replace equipment or replaceable parts, or indirect or consequential damages.

With the exceptions of the limited warranty set out above, there are no other understandings, agreements, representatives, or warranties implied (including any regarding the merchant-ability or fitness for a particular purpose), not specified herein, respecting this agreement or equipment, hereunder. This contract states the entire obligation of BRAWN Mixer, Inc. in connection with this transaction.

SHOULD WE MAKE A MISTAKE...

BRAWN Mixer, Inc.'s Direct Returns Policy

To ensure proper handling of your return, please take a moment to read the following:

- **ALL** returns require a **RETURN GOODS AUTHORIZATION (RGA) NUMBER**. We are unable to process your return or issue proper credit without an approved **RGA** number.
- **ALL** returns must be **COMPLETE**, including all original warranties, manuals, documentation and packaging.
- **ALL** product must be received within 20 days of issuing an **RGA** number.

How to Return Product

You must have a **RETURN GOODS AUTHORIZATION (RGA)** number before you return any product to BRAWN Mixer, Inc. To obtain this number, call **616/399-5600** and ask for Customer Service. Be sure to have available the following information:

- your order number
- your customer number
- the BRAWN product serial number
- the part number and description of the product
- the reason for the return

★ IMPORTANT ★

The Return Goods Authorization number must be written clearly on all boxes being returned. C.O.D. shipments will not be accepted.

Installation and Operation Instructions

Goulds

MODELS

3885
3885D
3886
3886D

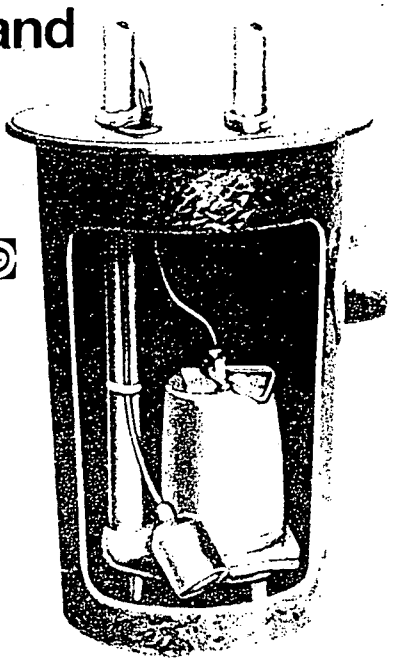

IMPORTANT

1. Inspect unit for damage. Report damage to carrier.
2. Electrical supply must be a separate branch circuit with proper fuses or circuit breakers, wire size, etc., conforming to National and Local Electrical Codes. Power supply voltage, phase and controls must match pump nameplate.
3. **Always** disconnect electrical power supply when handling pump or controls.
4. Do **not** use pump in swimming pools or hazardous liquids.
5. Liquid temperature not to exceed 160°F. (71°C)
6. Do **not** remove ground prong or use extension cords.
7. Use Goulds Pumps accessories.

Pump & Piping

1. Thread discharge pipe into discharge connection. If a check valve is used try to avoid installing it vertically. Position horizontally or at a 45° angle with valve pivot on top. This guards against small solids lodging on valve preventing it from opening. Drill a 3/16" hole in discharge pipe 2" above pump discharge connection to prevent air locking the pump. A gate valve should be installed in the system, after the check valve, to permit removal of pump or check valve for servicing. A union should be installed between check valve and pump.
2. **Rotation:** Check rotation after wiring is complete. Rotation must be counter-clockwise looking into pump suction.
   Caution: Do not feel for rotation. Will cause severe injury.
3. **Single-phase** pumps have built-in thermal overload protection with automatic reset. **Three-phase** units must be protected by a starter with proper overload protection:

Furnas Overloads Sizes Starter Size 00, 14BF32BCB1				
HP, Ph., Volts	HP	Volts	Heaters	
			E	K
0532	½	230	E41	K32
0534		460	E29	K22
0732	¾	230	E48	K39
0734		460	E38	K28
1032	1	230	E51	K43
1034		460	E41	K32
1532	1½	230	E55	K50
1534		460	E46	K36

Basin

Basin should have a sturdy bottom to give legs of pump adequate support. Leg height elevates pump above bottom of basin to allow effluent to reach suction opening.

When using basins without hubs, attach 4" cast iron inlet hub as required. For duplex basins, seal second hub if not used.

Basin Cover

Remove protective strip from gasket and press onto recessed portion of basin rim. With a pointed tool, poke holes through gasket into tapped holes. Do not damage threads. Route electrical cords through appropriate opening in basin cover.

Fit basin cover over discharge pipe. Power cords are sealed with split rubber stopper. Rubber ring is placed over discharge pipe and compressed between pipe and cover by the flange (chamfered side down) to form a seal. Thread vent pipe into flange on basin cover.

Manual Operation

On pumps equipped with a molded plug, insert into a suitable outlet controlled by a switch. If a separate controller is used, turn "Hand-Off-Auto switch to "Hand" operation.

Automatic Operation

1. **Diaphragm Control Switch:** A pressure activated switch providing automatic operation with 6" differential in liquid level. Turns on when liquid is 10" above bottom of switch and turns off at 4" above bottom of switch.

Caution: This switch has a vent tube which must be unobstructed and protected from moisture, dirt, etc. Mount power cord so vent tube points down.

NOTE: ⅓-½HP, 1ϕ pumps require Switch only.
¾-2HP, 1ϕ pumps require a Contactor.
All 3ϕ pumps require a Mag Starter.

2. **Mercury Switches:** Single float switches. As the liquid-level rises or falls, the float changes angle until the mercury switch makes or breaks circuit. See NOTE 1A above.

Float Switch Model	Application	HP Range	Electrical Rating	Wiring Configuration
A2-3	Pilot Duty	⅓-5	Single or Three Phase w/Contactor or Starter	Bare Leads
A2-5	Direct Connection, Differential Level	⅓-½	115 V.1 Phase	3-Prong Series Plug
A2-6		⅓-¾	230 V.1 Phase	
A2-7	Pilot Duty, Differential Level	⅓-5	Single or Three Phase w/Contactor or Starter	Bare Leads
A2-9	Direct Connection, Differential Level	⅓-½	115 V.1 Phase	3-Prong Series Plug

Dual-Seal Units

Two (2) Mechanical Shaft Seals are separated by an oil-filled seal chamber. If Lower seal begins to leak, Upper seal will still be lubricated by oil in the motor cover and is protecting the motor. Normal operation can continue until prompt replacement of Lower seal which is now being temporarily lubricated by the water/oil emulsion in the seal chamber.

Lubrication

Caution: Disconnect all electrical power when handling pump or controls.

Important: Submersible pump/motor units are oil-filled. On a regular schedule, depending on usage, check oil quantity and condition as follows:

Caution: If there has been leakage, the motor cover may be under pressure. Hold a rag over inspection plug to prevent splatter when loosening it. Take a sample of the oil with a dipstick. If oil is emulsified (cream-like), or watery, it indicates a leak.

For Dual-Seal Unit, lay unit on side and also make same checks of oil in lower seal chamber through its inspection plug.

Possible causes of leakage: loose inspection plug, loose cable entry, leak at O-ring joint(s), worn shaft seal(s).

Have problem corrected and motor cover cavity refilled to 90% full (½" minimum above motor).

For Dual-Seal Unit, the lower seal cavity must also be refilled to 90% full.

Limited Warranty

This warranty applies to all pumps and related accessories manufactured and/or supplied by Goulds.

Any part or parts found to be defective within the warranty period shall be replaced at no charge to the buyer or any subsequent owner during the warranty period. The warranty period shall exist for a period of twelve (12) months from date of installation or eighteen (18) months from date of manufacture, whichever period is shorter.

A user who believes that a warranty claim exists must contact the authorized Goulds dealer from whom the equipment was originally purchased and furnish complete details regarding the claim. The dealer is authorized to adjust any warranty claims utilizing Goulds Customer Relations Department and its distributor organization.

This warranty excludes:

(a) Labor, transportation and related costs incurred by the consumer to make the allegedly defective equipment available to the dealer for inspection.

(b) Re-installation costs of repaired equipment.

(c) Re-installation costs of replacement equipment.

(d) Consequential damages of any kind.

(e) Reimbursement for loss caused by interruption of service.

GOULDS PUMPS, INC.
SENECA FALLS, NEW YORK 13148
Form No. 486-2SF Litho in U.S.A.

Problem Tracing Guide

PROBLEM	PROBABLE CAUSES	CORRECTIVE ACTION
Pump Will Not Shut Off. **Note:** Before trouble shooting automatic control, check to see that pump operates on manual control. If it does, automatic controls are at fault. If not, fault is in pump or power supply.	Diaphragm Switch Weak rubber diaphragm Plugged vent tube Dirt or sediment lodged between retainer ring and rubber diaphragm causing contacts to remain closed.	Replace switch. Clear vent tube of any obstruction. Clean area around rubber diaphragm.
	Pump is air locked.	Shut power off for approximately 1 minute, then restart. Repeat several times to clear air from pump. If system includes a check valve, a 3/16" hole should be drilled in discharge pipe approximately 2" above discharge flange connection.
	Liquid inflow matches pump capacity.	Larger pump required.
Pump Runs But Does Not Discharge Liquid	Check valves installed backwards.	Check flow indicating arrow on check valve body to insure it is installed properly.
	Check valve stuck or plugged.	Remove check valve and inspect for proper operation.
	Lift too high for pump.	Check rating table.
	Inlet to impeller plugged.	Pull pump and clean.
	Wrong rotation.	Change rotation.
	Pump is air locked.	(See corrective action above)
Pump Does Not Deliver Rated Capacity	Lift too high for pump.	Check rating table.
	Low voltage, speed too low.	Check for proper supply voltage to make certain it corresponds to nameplate voltage.
	Impeller or discharge pipe is clogged.	Pull pump and clean. Check pipe for scale or corrosion.
	Impeller may be rotating in the wrong direction.	**Single Phase Units** — Shut off power and allow impeller to stop rotating. Turn pump on again, and pump should self-correct rotation. Long discharge pipe without check valve allows liquid to drain back to sewage basin, rotating impeller backwards. If pump starts while impeller is rotating in the wrong direction, it will continue to operate in that direction. **Three Phase Units** — Interchange any two (2) power lead connections.
	Impeller wear due to abrasives or corrosion.	Replace worn impeller.
Pump Cycles Continually	No check valve in long discharge pipe allowing liquid to drain back into basin.	Install a check valve in discharge line.
	Check valve leaking.	Inspect check valve for correct operation.
	Sewage basin too small for inflow.	Install larger size sewage basin.

Goulds

Submersible Effluent Pump

MODEL

3885

CANADIAN STANDARD ASSOCIATION

APPLICATIONS

Specifically designed for the following uses:

- Homes
- Farms
- Trailer courts
- Motels
- Schools
- Hospitals
- Industry
- Effluent systems

SPECIFICATIONS

Pump:

- Solids handling capabilities: ¾" maximum.
- Discharge size: 2" NPT.
- Capacities: up to 128 GPM.
- Total heads: up to 123 feet TDH.
- Mechanical seal: silicon carbide-rotary seat/silicon carbide-stationary seat, 300 series stainless steel metal parts, BUNA-N elastomers.
- Temperature: 104°F (40°C) continuous 140°F (60°C) intermittent.
- Fasteners: 300 series stainless steel.
- Capable of running dry without damage to components.

Motor:

- Single phase: ⅓ HP, 115 or 230 V 60 Hz, 1750 RPM; ½ HP, 115 V, 60 Hz, 3500 RPM; ½ HP – 1½ HP, 230 V, 60 Hz, 3500 RPM. Built-in overload with automatic reset. Class B insulation.
- Three phase: ½ HP – 1½ HP 200/230/460 V, 60 Hz, 3500 RPM. Class B insulation, overload protection must be provided in starter unit.
- Shaft: threaded, 400 series stainless steel.
- Bearings: ball bearings upper and lower.
- Power cord: 20 foot standard length (optional lengths available). Single phase: ⅓ and ½ HP – 16/3 SJTO with three prong plug. ¾-1½ HP – 14/3 STO with bare leads. Three phase: ½-1½ HP – 14/4 STO with bare leads. On CSA listed models – 20 foot length SJTW and STW are standard.

FEATURES

Impeller: Cast iron, semi-open, non-clog with pump-out vanes for mechanical seal protection. Balanced for smooth operation. Silicon bronze impeller available as an option.

Casing: Cast iron volute type for maximum efficiency. 2" NPT discharge adaptable for slide rail systems.

Mechanical Seal: Silicon carbide vs. silicon carbide sealing faces. Stainless steel metal parts, BUNA-N elastomers.

Shaft: Corrosion-resistant stainless steel. Threaded design. Locknut on three phase models to guard against component damage on accidental reverse rotation.

Motor: Fully submerged in high-grade turbine oil for lubrication and efficient heat transfer.

Designed for Continuous Operation: Pump ratings are within the motor manufacturer's recommended working limits, can be operated continuously without damage.

Bearings: Upper and lower heavy duty ball bearing construction.

Power Cable: Severe duty rated, oil and water resistant. Epoxy seal on motor end provides secondary moisture barrier in case of outer jacket damage and to prevent oil wicking.

O-ring: Assures positive sealing against contaminants and oil leakage.

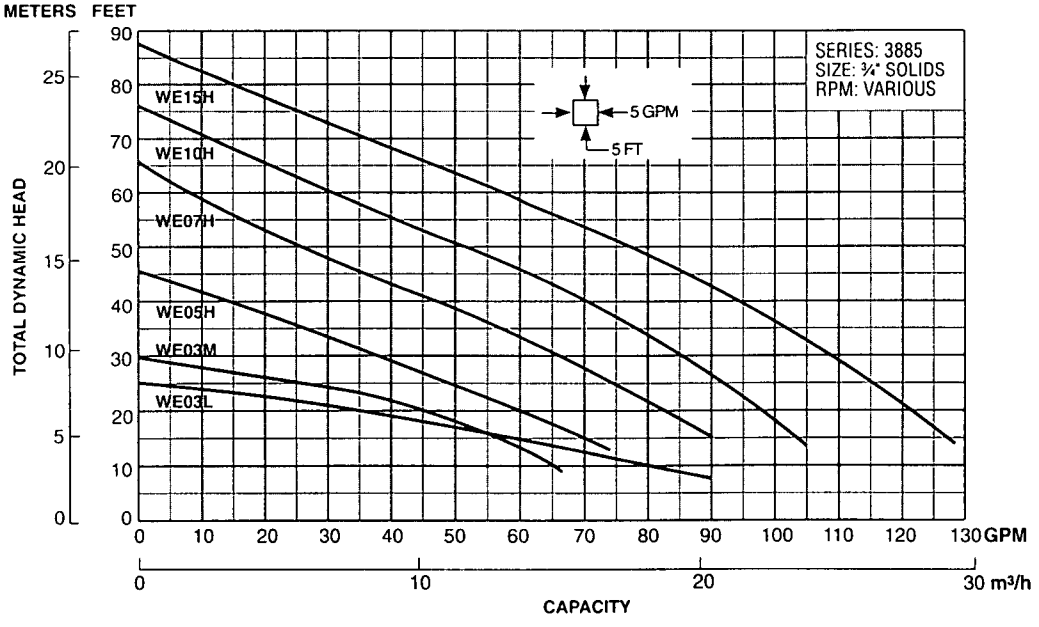

© 1994 Goulds Pumps, Inc.

Effective May, 1994
B3885

PARTS

Item No.	Description
1	Impeller
2	Casing
3	Mechanical seal
4	Shaft
5	Motor
6	Bearings – upper and lower
7	Power cable
8	O-ring

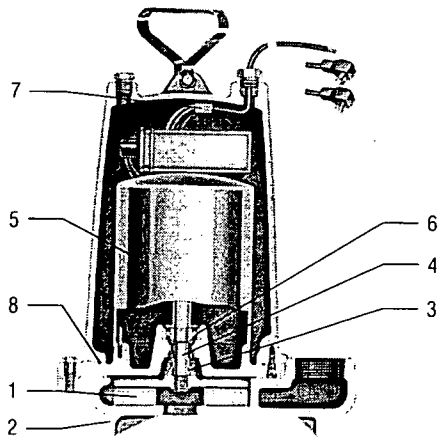

Goulds

Submersible Effluent Pump

MODEL

3885

MODELS

Order No.	HP	Volts	Phase	Max. Amp.	RPM	Solids	Wt. (lbs.)
WE0311L	⅓	115	1	9.4	1750	¾"	56
WE0312L		230		4.7			
WE0311M		115		9.4			
WE0312M		230		4.7			
WE0511H	½	115		13.0	3500		60
WE0512H		230		6.5			
WE0538H		200	3	3.9			
WE0532H		230		3.4			
WE0534H		460		1.7			
WE0511HH		115	1	13.0			
WE0512HH		230		6.5			
WE0538HH		200	3	3.8			
WE0532HH		230		3.3			
WE0534HH		460		1.65			
WE0712H	¾	230	1	10.0			70
WE0738H		200	3	6.2			
WE0732H		208 – 230		5.4			
WE0734H		460		2.7			
WE1012H	1	230	1	12.5			
WE1038H		200	3	8.1			
WE1032H		208 – 230		7.0			
WE1034H		460		3.5			
WE1512H	1½	230	1	15.0			80
WE1538H		200	3	10.6			
WE1532H		208 – 230		9.2			
WE1534H		460		4.6			
WE1512HH		230	1	15.0			
WE1538HH		200	3	10.6			
WE1532HH		208 – 230		9.2			
WE1534HH		460		4.6			

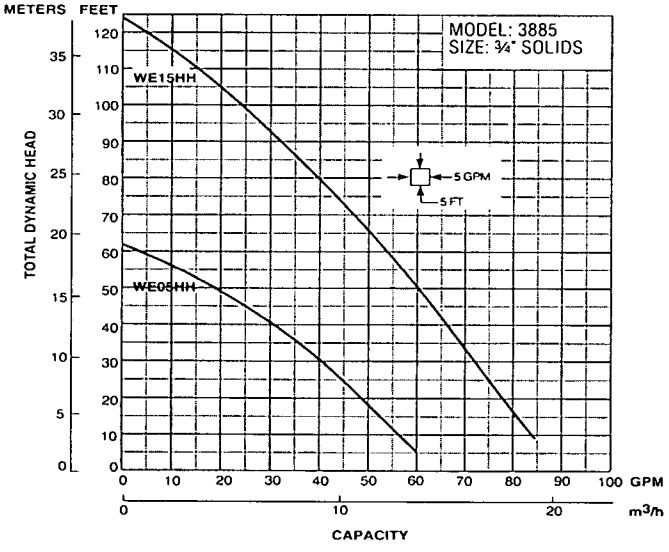

PERFORMANCE RATINGS (gallons per minute)

Order No.	WE0311L WE0312L	WE0311M WE0312M	WE0511H WE0512H WE0538H WE0532H WE0534H	WE0712H WE0738H WE0732H WE0734H	WE1012H WE1038H WE1032H WE1034H	WE1512H WE1538H WE1532H WE1534H	WE0511HH WE0512HH WE0538HH WE0532HH WE0534HH	WE1512HH WE1538HH WE1532HH WE1534HH
HP	⅓	⅓	½	¾	1	1½	½	1½
RPM	1750	1750	3500	3500	3500	3500	3500	3500
Total Head Feet of Water								
5	–	–	–	–	–	–	60	–
10	80	65	–	–	–	–	56	84
15	60	57	69	90	104	128	53	82
20	36	45	60	83	98	122	48	77
25		25	50	76	92	116	45	75
30			38	67	85	109	40	72
35			26	58	78	102	35	70
40			15	47	70	94	30	67
45				36	62	86	25	64
50				25	52	77	18	60
55				17	42	67	12	58
60				8	32	56	3	54
65					21	46		51
70					11	35		47
75						25		43
80						15		40
90								33
100								24
110								15
120								5

DIMENSIONS

(All dimensions are in inches. Do not use for construction purposes.)
D" ⅓, ½, ¾ and 1 HP = 15"
except for model WE0712H and WE1012H = 18"; 1½ HP = 18"

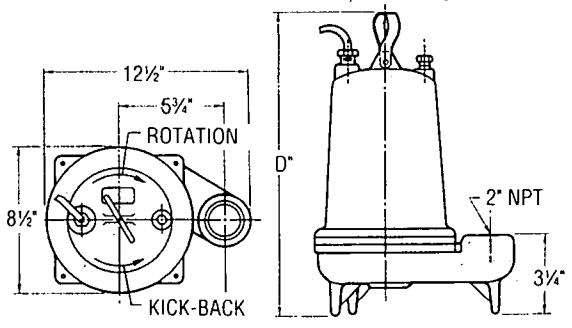

EFFLUENT EJECTOR SYSTEM

Effluent ejector system offers ease of ordering and installation. A single ordering number specifies a complete system designed for most residential and commercial sump and effluent pump applications.

Package Includes:
Submersible Effluent Pump WE0311L, 12L or WE0311M, 12M, WE0511HH, 12HH
Mercury Level Control Switch
A2-5 (115V), A2-6 (230V)
Basin A7-1801S, Basin Cover A8-1822
Check Valve A9-2P
Order No.: SWE0311L, SWE0312L, SWE0311M, SWE0312M, SWE0511HH, SWE0512HH.

Repair Parts

MODEL GL885

PART NO.	PART NAME	PATTERN NO.
1K170	Casing-All Medium (M), High (H), High-High (HH), Head Models	59114
1K171	Casing-WE0311L, WE0312 Low Head/High Flow Models Only	59115
1K79	Motor Cover-⅓ HP and ½ HP Single Phase	56887
1K83	Motor Cover-½ HP-1 HP Three Phase	56887
1K150	Motor Cover-¾ HP-1½ HP Single and 1½ HP Three Phase	59055
1K167	Stuffing Box	59113
2K158	Impeller All ⅓ HP	59049
2K220	Impeller ½ HP WE05(H)	59086
2K219	Impeller ¾ HP WE07(H)	59051
2K218	Impeller 1 HP WE10(H)	59050
2K217	Impeller 1½ HP WE15(H)	59050
2K225	Impeller ½ HP WE05(HH)	59097
2K221	Impeller 1½ HP WE15(HH)	59076
2K271	Impeller All ⅓ HP	59049
2K272	Impeller ½ HP WE05(H)	59086
2K273	Impeller ¾ HP WE07(H)	59051
2K274	Impeller 1 HP WE10(H)	59050
2K275	Impeller 1½ HP WE15(H)	59050
2K276	Impeller ½ HP WE05(HH)	59097
2K277	Impeller 1½ HP WE15(HH)	59076
4K132	Ball Bearing	
4K243	Lift Handle Assembly	
4K245	Insulating Oil (Gal.) ⅓ & ½ HP 6 Pts. Req.; ¾-1½ HP 8 Pts. Req.	
4K252	"O" Ring	
5K111	Strain Relief Assembly-¾-1½ HP 1 Phase & All 3 Phase	
5K113	Strain Relief Assembly-⅓, ½ HP 1 Phase	
6K3	Plug-⅜" NPT	
9K142	Heat Shrink Tubing-1 Phase Models Only	
9K143	Capacitor Cap	
9K144	Capacitor	
9K145	Insulating Connector-3 Phase Models Only	
9K153	Cord Set-All 3 Phase (Except CSA)	
9K163	Cord Set-¾-1½ HP 1 Phase (Except CSA)	
9K164	Cord Set-⅓ & ½ HP 1 Phase 230 Volt (Except CSA)	
9K165	Cord Set-⅓ & ½ HP 1 Phase 115 Volt (Except CSA)	
9K195	Cord Set-⅓ & ½ HP 1 Phase 115 Volt-CSA	
9K196	Cord Set-⅓ & ½ HP 1 Phase 230 Volt-CSA	
9K180	Cord Set-¾-1½ HP 1 Phase-CSA	
9K181	Cord Set-All 3 Phase-CSA	
9K197	Capacitor ½ HP Single Phase Only	
10K10	Mechanical Seal Assembly	
13K5	Fillister Head Screw-St. Box to Motor Cover	
13K6	Impeller Locknut-3 Phase Only	
13K17	Capacitor Bracket	
13K144	Strap-Capacitor	
13K186	Hex Cap Screw-St. Box to Casing	
AL27121	Loctite #271	

Cast Iron

Bronze

Note: Impellers on 3 ϕ units are Loctited to motor shaft. Impellers and locknuts must be heated to be removed. When replacing impeller, use Loctite AL271121. See instruction manual.

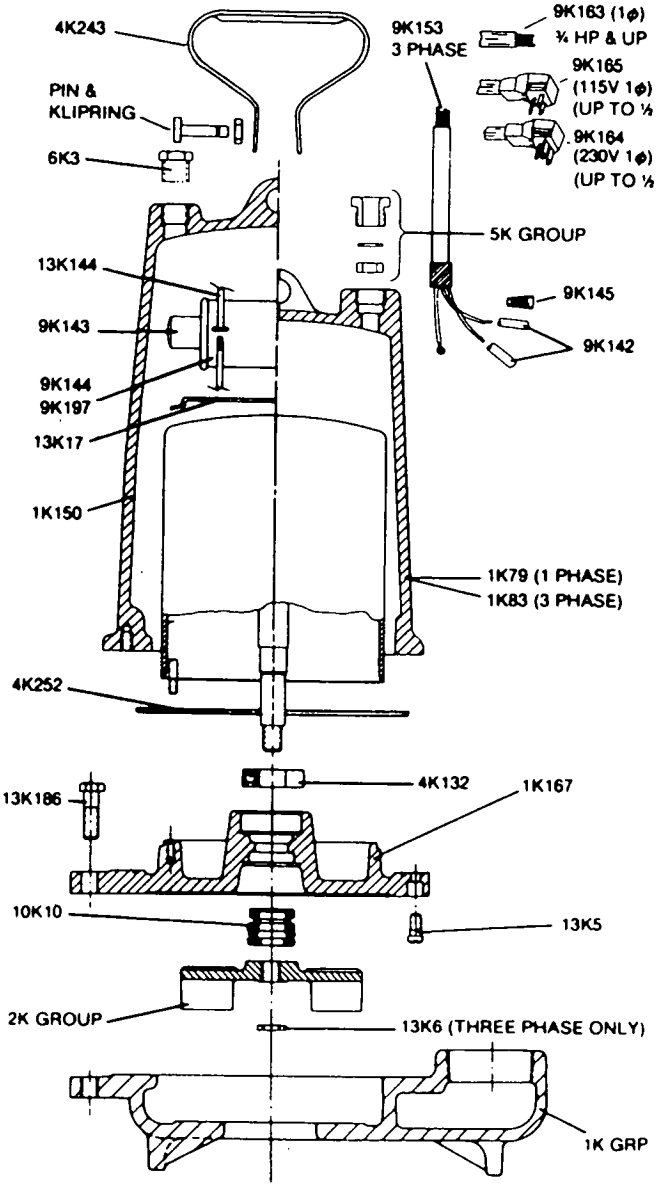

Repair Motor Numbers				
HP	Phase	Voltage	RPM	Order #
⅓	1	115	1750	118-12-01
⅓	1	230	1750	118-12-02
½	1	115	3500	118-12-22
½	1	230	3500	118-12-23
¾	1	230	3500	118-12-24
1	1	230	3500	118-12-25
1½	1	230	3500	118-12-26
½	3	208/230/460	3500	118-13-21
¾	3	208/230/460	3500	118-13-22
1	3	208/230/460	3500	118-13-23
1½	3	208/230/460	3500	118-13-24

©1987 G&L

Effective January, 1988

G&L
A GOULDS PUMPS COMPANY G

SPECIFICATIONS ARE SUBJECT TO CHANGE WITHOUT NOTICE.

PRINTED IN U.S.A.

OPERATING — GRAVER WATER — INSTRUCTIONS

Division of The Graver Company

OPERATION MANUAL

LAMELLA CLARIFIER
FOR
BRUNSWICK NAVAL AIR STATION
AT
BRUNSWICK, MAINE

GRAVER JOB NUMBER: 12835

Date
JANUARY, 1995

Buyer's Order Number
MC-9408-6
H.E. SARGENT, INC.

Please refer to Graver Job Number on all correspondence concerning this equipment.

TP

GRAVER JOB NO. 12835

OPERATION MANUAL

GENERAL INDEX

SECTION 1 ..... INTRODUCTION
SECTION 2 ..... LAMELLA CLARIFIER
SECTION 3 ..... BILL OF MATERIAL
SECTION 4 ..... DRAWINGS
SECTION 5 ..... MANUFACTURERS' LITERATURE

GRAVER JOB NO. 12835

SECTION 1 INDEX

INTRODUCTION

PAGE

Intent and Scope 1-1
Liability for Language Translation 1-2
Safety Procedures 1-3
User's Responsibility 1-5
Procedures For Field Changes 1-6
Field Service 1-6

INTENT AND SCOPE

Graver Water Division of the Graver Company, located at 2700 U.S. Highway #22, Union, New Jersey 07083, has furnished a Lamella Clarifier Model 10625 RLF with integral Flash/Flocculation Tank to Brunswick Naval Air Station located at Brunswick, Maine.

Notice

The contents of this manual should be thoroughly read and understood before attempting to operate any of the equipment or perform any process function.

LIABILITY FOR LANGUAGE TRANSLATION

All written material provided with Graver Equipment, including equipment tags and control panel labels, are written in the English language. The need for translation of instructions, warnings, tags, and labels into another language shall be determined by the purchaser and/or user of Graver Equipment. The translation of instructions, warnings, tags, and labels into another language is the responsibility of the purchaser and/or user of Graver Equipment.

SAFETY PROCEDURES

GENERAL

Operation of plant facilities should conform to established safety standards. The Department of Labor Occupational Safety and Health Standards should be followed. Brunswick Naval Air Station safety plant practices must be followed.

Plant areas where the equipment is being tested or adjusted (before or during regular operation of the facility) should be isolated by barriers (with signs) to prevent accidental entry to the area.

EYE WASH BASINS AND SAFETY SHOWERS SHOULD BE AVAILABLE TO PERSONNEL THAT ARE IN AREAS WHERE STRONG CHEMICALS ARE USED.

GOGGLES, PROPER HEAD COVERING, PROTECTIVE CLOTHING, GAS AND OXYGEN MASKS SHOULD BE AVAILABLE.

ALL AREA PERSONNEL SHOULD BE TRAINED IN ARTIFICIAL RESPIRATION METHODS.

IF BREATHING STOPS DUE TO A LACK OF OXYGEN IN A TANK OR CLOSED SPACE, ARTIFICIAL RESPIRATION SHOULD BE STARTED AT THE EARLIEST POSSIBLE MOMENT.

IF BREATHING STOPS DUE TO ELECTRICAL SHOCK, REMOVE SOURCE WITH A DRY CLOTH OR A DRY ROPE. APPLY ARTIFICIAL RESPIRATION AT THE EARLIEST POSSIBLE MOMENT.

SAFETY PROCEDURES

ENTERING AN ENCLOSED SPACE

WARNING
BEFORE ENTERING A TANK OR VESSEL:

1. Be sure that eye wash basins and safety showers are available and working.

2. Wear as required, appropriate protective equipment -

   An adequate safety line
   An air fed mask
   Gloves; and/or
   Protective clothing and shoes.

3. Notify the appropriate Safety Personnel and obtain a vessel entry permit if required.

4. Notify the Safety Department and request a gas check (CO, CO_2, H_2, Freon, other odorless gases).

5. Be sure that all valves to the tank are closed and tagged (liquid, chemicals). Vent valves should be left open. Most automatic valves have a manual hand wheel shut off. Some systems have separate manual shut off valves. Tag and lock the valves in the safe position. Blank all pipe lines entering or leaving the vessel.

6. Be sure that the control panel is tagged OUT OF SERVICE.

7. Be sure that adequate ventilation is supplied. Use blowers or suctions fans. Allow sufficient time for the inside of the vessel to be completely ventilated.

8. Before entering, inspect the internal construction for:

   Adequate footing;
   Slippery media;
   Footing that could collapse;
   Objects that could fall;
   Sharp or jagged parts; and/or
   Equipment which should be avoided to prevent breakage.

9. Be sure that a safety man is outside the tank with visual (or other) contact with you at all times.

USER'S RESPONSIBILITY

1. Off-loading, erection, installation, testing and/or storage of all equipment.
2. Interconnecting power, signal and control wiring, protection devices including motor starting equipment required by local NEC codes.
3. Installation of all "ship loose" components.
4. Touch-up and finish painting of external tank surfaces, structural steel components, and/or piping.
5. All labor and materials including tools, lubricants, consumables, chemicals and site utilities to install, start-up, test and/or operate the complete system.
6. Collection and testing of water samples to determine optimum operation of performance.
7. Foundations and anchor bolts.
8. Interconnecting piping, including drain, sludge blowdown, and utility.
9. Tubing, valves, and accessories.
10. All walkways, structural supports, stairs, ladders, guardrails, grating and associated hardware.
11. Freeze protection, if required.
12. Clean dry, rust free, oil free, good quality service water or potable water supply as necessary at the required locations.
13. Chemical dosing equipment including field instrumentation to control same.

PROCEDURES FOR FIELD CHANGES

No allowance will be made for changes or additions to equipment or materials without Graver's specific approval.

Purchaser shall notify Graver promptly of any defects and permit inspection as required.

In the event that Purchaser thinks that alterations or repairs are necessary, please contact Graver's Customer Service Coordinator or Customer Service Manager for approval before proceeding with any work. Written confirmation will follow any verbal approvals.

Telephone: (908) 964-2400

Telefax: (908) 964-7770

Mail: Attn: Service Department
GRAVER COMPANY
Graver Water Division
2700 U.S. Highway 22
Union, New Jersey 07083

FIELD SERVICE

Field Engineers are available at a per diem price to assist in erection, start-up, troubleshooting or training. These services will prevent many future operating and maintenance problems. Please use contacts above.

GRAVER JOB NO. 12835

SECTION 2 INDEX

LAMELLA CLARIFIER

PAGE

Design Data
Flash/Floc Tank Integral with Lamella Clarifier 2-1
Lamella Clarifier - Model 10625RFL 2-2
Flash Mix and Flocculation Tank Operation 2-3
Lamella Clarifier Process Description 2-3
Collection Weir Adjustment 2-4
Starting Procedures 2-4
Stopping the System 2-4
Sludge Removal 2-5
Recommended Sludge Removal Operation 2-5
V/V-Sludge Settling Test 2-6
Lamella Plate Handling Precautions 2-7
Lamella Plate Cleaning 2-7
Performance of Lamella 2-8
Troubleshooting Guide 2-9
Jar Test Instructions 2-11
Technical Reprint - Chemical Treatment for Water Clarification T-177

ILLUSTRATIONS

Flow Path Typical Lamella Clarifier 2-3A

FORM 05-359

DESIGN DATA

FLASH/FLOC TANK INTEGRAL WITH LAMELLA

Number	One
Capacity:	
Flash Volume	110 Gallons
Flocculation Volume	660 Gallons

FLASH MIXER

Number	One
Manufacturer	Brawn Mixer
Model	BD50
Type	Direct-Driven
Shaft	316SS, 0.75" Dia. x 36" Long
Impeller	316SS, 4" Dia.
Motor:	
Horsepower	1/2 Hp
Electrical	115 V, 1 PH, 60 HZ
Speed	1750 RPM

FLOC MIXER

Number	One
Manufacturer	Brawn Mixer
Model	SG33
Type	Gear-Driven
Shaft	316SS, 0.625" Dia. x 48" Long
Impeller	316SS, 11.5" Dia.
Impeller Speed	20 to 350 RPM
Motor:	
Horsepower	1/3 HP
Electrical	90 VDC
Speed	1750 RPM

SPEED CONTROLLER

Number	One
Manufacturer	Reliance
Model	DC2-70
Horsepower	1/3 HP
Electrical	115 V, 1 PH, 60 HZ

DESIGN DATA

LAMELLA CLARIFIER - MODEL 12120RLF

Number	One
Tank Material	Carbon Steel
Lamella Plate Size	4'W x 8'L
Plate Spacing	2"
Number of Plates	11
Angle of Elevation	55°
Maximum Flow	33 GPM
Rated Flow	30 GPM
Effective Projected Plate Area	188.4 Ft^2
Rise Rate	0.16 GPM/Ft^2
Overall Dimensions: Including Integral Flash/Floc Tank	
Width	6'-8"
Length	11'-5"
Height	12'-0"

The addition, type and dosage levels of chemicals required are the responsibility of the Purchaser.

FLASH MIX AND FLOCCULATION TANK OPERATION

The Flash Mix and Flocculation Tank provided is divided internally into two compartments, and is an integral part of the Lamella Clarifier.

Water to be treated is fed into the flash mix compartment where it is intimately mixed with chemicals by the fast speed mixer. The partition plate, dividing the tank compartments, is open at the top of the tank allowing water to pass into the flocculation compartment.

In the flocculation compartment, mixing continues and flocculation is completed by a more gentle mixing which controls the collision of smaller particles into larger more settleable floc. Water containing this floc passes under a baffle in the flocculation compartment before flowing to the lamella separator.

The speed of the flocculation mixer is adjustable to provide optimum energy input by changing mixing intensity. Varying the mixer speed will control floc mass which governs settling characteristics. The mixer speed should be adjusted if the floc from the lamella is being carried over in the effluent stream.

Water flow through the lamella should be started slowly. Starting the flow just by turning on a pump, or changing rates quickly can cause "carryover", of floc in the lamella effluent until the lamella adjusts to the new flow rate.

LAMELLA CLARIFIER PROCESS DESCRIPTION

The Graver Lamella Clarifier provides a means of water clarification at a large savings of plant surface area. The clarifier consists of a series of inclined overlapping lamella plates which are arranged to form separate sedimentation chambers of cells between each pair of adjacent plates.

Wastewater enters the clarifier and is distributed through feed distributions ducts along each side of the lamella plates. The water then enters each plate chamber near the bottom section of the plates and flows upward between them. As the water flows upward, solids settle downward by descending a short distance onto the surface area provided by the plates. The solids continue to slide down the surfaces to the collection hopper.

The clarified water flows upward and leaves each plate chamber through orifice holes in adjustable weir plates located along each side of the lamella clarifier.

Collection of the solids in the collection hopper helps compress the water from the sludge. This compression effect produces a more concentrated liquid sludge. The liquid sludge must be removed from the lamella on a periodic basis. The release can be automated to be proportional to lamella inlet flow or be regulated on a time cycle basis. The blowdown interval and duration should be field adjustable to minimize the liquid sludge disposal volume.

See Flow Path of a Typical Lamella Clarifier found on Page 2-3A.

TYPICAL LAMELLA CLARIFIER

FLOW PATH

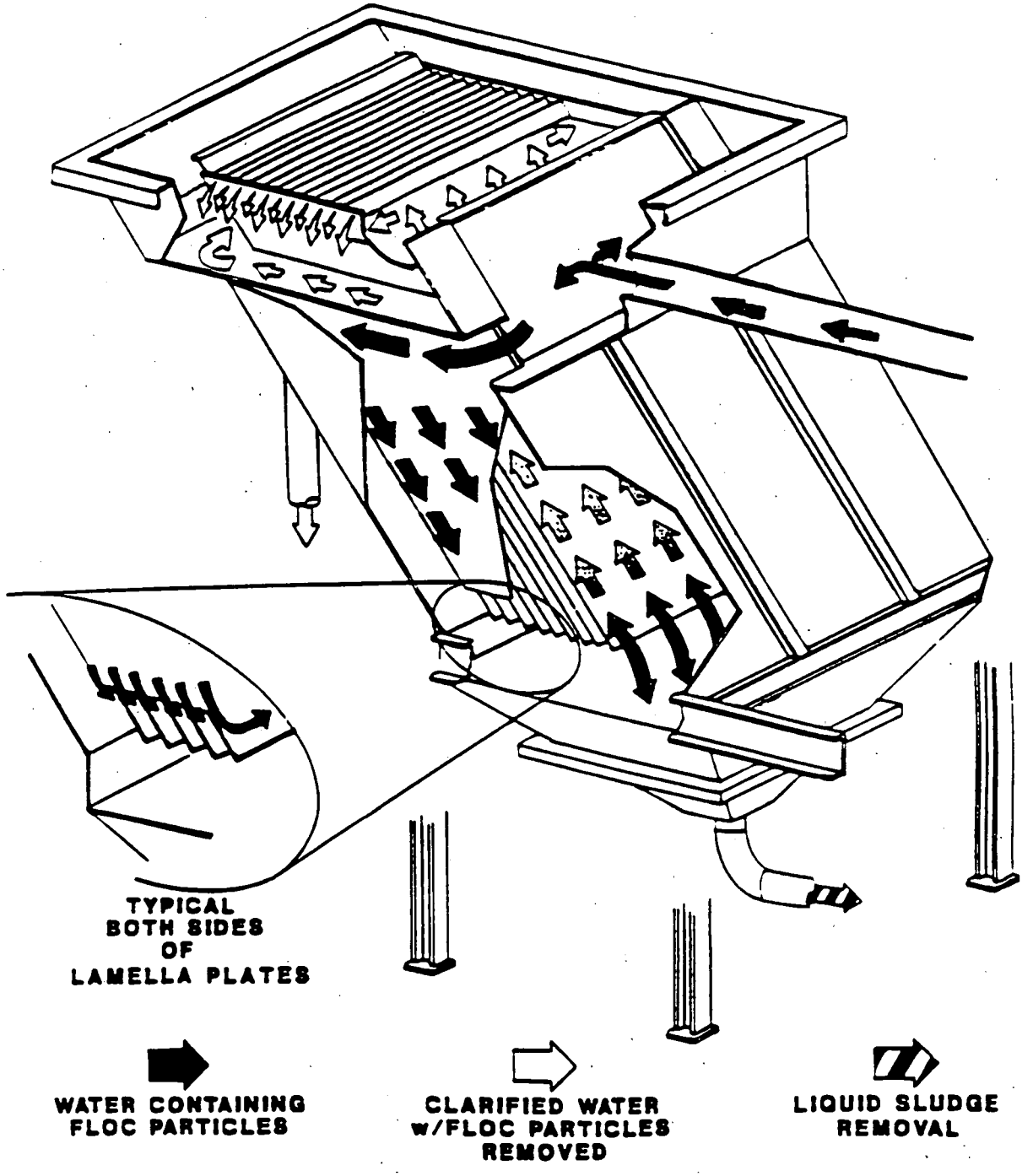

FORM 05-359

COLLECTION WEIR ADJUSTMENT

The weir plates should be adjusted to maintain a water level of approximately 4.5" below the top of lamella. It is critical that the weirs are adjusted to the same level position within 1/8". It is easier to adjust the weir plates before installing the lamella plates. Fill the tank with water to a level just below the orifice holes. Then readjust the weir plate so that an equal distance is maintained between the bottom of the orifice holes and the water level for the entire length of each weir plate.

Incorrect adjustment of the weir plates can cause hydraulic imbalances and poor performance.

STARTING PROCEDURES

The flash and flocculation mixers should be turned on when enough water is in the tank for proper mixing. Chemicals, if added, should be added as soon as practical (immediately, if the system is already filled with water).

Mixers should remain on until the system is to be shutdown.

STOPPING THE SYSTEM

Up to 1 Day

For short term shutdown, reduce water flow and chemical feeds to 0 gpm.

1 to 3 Days

Stop water flow and chemical feeds. Remove all sludge from the unit.

4 or More Days

Stop water flow and chemical feeds.
Remove all sludge from the Lamella Clarifier.
Stop the flash and flocculation mixers.
Drain the flash mix and flocculation tank, and Lamella Clarifier.
Cleaning Lamella plates (See Page 2-7).

SLUDGE REMOVAL

Sludge should be removed at periodic intervals which range from minutes to several hours, to once per day. Sludge should be allowed to accumulate in the hopper to mid-height, as determined by periodic sampling. During any start-up period, the sludge outlet valve should be kept shut to allow sludge to be accumulated. Sludge samples should be taken as necessary from the sample lines but at least every four hours. The sludge load is determined by the V/V (Volume for Volume) Sludge Settling Test, as described on Page 6. The sludge level should never be allowed to rise above the top sample point.

RECOMMENDED SLUDGE REMOVAL OPERATION

Sludge removal should be a two step operation whether it is manual or automatic. Step One is the blowdown operation and Step Two is a backflush of the blowdown line.

The blowdown of the sludge should be performed such that smaller volumes of sludge are blown down more frequently. However, excessive blowdown reduces sludge dry solids concentrations and increases the liquid volume. Improper sludge blowdown can directly effect system performance.

The purpose of the backflush operation is to prevent the precipitates within the blowdown line itself from setting-up into a relatively nonfluid state, which might cause blockage of the blowdown line. It is not necessary to completely wash out the blowdown line, but only to stir up any material which may have settled in the pipe, so that it may be carried away with the blowdown flow. The backflush valve should just be barely open for a short period generally 10 seconds or less to cause an extremely slight water flow into the blowdown line. Normally, this is obtained with a backflush timer. In cases where the sludge does not have a tendency to pack, it is advantageous to shut off the backflush entirely. If the lamella separator is to be taken off line for an extended period, all the sludge should be removed.

In some cases, it is common practice to turn the backflush system on for only a few minutes a day to prevent any buildup within the blowdown line.

V/V - SLUDGE SETTLING TEST

The volume percent of settled sludge is affected by changes in the flow rate and solids content of water being treated. This is determined in the relative volume method called the V/V Test. This test is used as a troubleshooting help and to determine sludge concentration in the sludge hopper.

The term V/V minutes is generally used when referring to a sample collected in a 100 ml. graduated cylinder which is allowed to stand for 10 minutes. At the end of the settling period, the amount of sludge present in the sample is measured as a percentage of the total volume of the sample collected. V/V is "Volume of Settled Sludge per Volume of Sample" drawn.

Note: Any convenient size graduated cylinder can be used as long as settled amount is reported as a percentage.

Example: If the sample after settling contains 300 mls. of settled sludge, this would be logged as a V/V 30% sample.

To take a sample, follow the sampling procedure described below:

$$\textit{Equation:}\quad \frac{\textit{Volume Settled Sludge} \times 100}{\textit{Volume Sample Drawn}} = \%V/V$$

1. Open sampling lines wide open and permit the sample flow to go waste to obtain a representative sample.
2. Rinse out a 100 ml. graduated cylinder with the sample flow.
3. Draw a 100 ml. sample in the graduated cylinder.
4. Permit to settle undisturbed for 10 minutes.
5. Record settled sludge in direct ml. reading on graduate.
6. Log as % V/V.

It is recommended that the sludge in the Lamella Clarifier be sampled at least once per shift.

LAMELLA PLATE HANDLING PRECAUTIONS

The fiberglass reinforced plastic (FRP) plates associated with the lamella should not be installed until the unit is filled with water.

FRP is flammable material (in various degrees depending upon the resin used), and therefore, care must be taken against accidental ignition. This is especially true before the plates are installed in the unit, or when the unit is drained. Note that if the lamella clarifier is to be left drained overnight, we would recommended removal of the plates. The water helps to support and wet the 4 foot x 8 foot lamella plates.

Upon receipt of the lamella plates care should be given as to how they are handled. They should not be thrown, stepped on, allowed to fall, etc. Particularly sensitive are the support channels, since they are mechanically and chemically jointed to the flat plate.

When the plates are installed in the unit, they should be slid down slowly into the tank - THEY SHOULD NOT BE ALLOWED TO FALL. Once they are installed, THEY SHOULD NOT BE WALKED ON. If necessary a wide board may be placed across the steel walls of the unit to protect the plates. The operator can walk on this board (if a platform does not exist). When working on this board, plant personnel should follow plant maintenance safety procedures.

LAMELLA PLATE CLEANING

The lamella plates should be removed for cleaning periodically. The frequency of plate cleaning is dependent on specific application and should be determined by operating experience. Any waste deposits present are then removed by appropriate methods, depending on type of deposit. A common method of cleaning lamella plates is using liquid detergent and a water lance. A relatively clean inclined surface increases the ease with which settled precipitates slide or roll down the plates to the collection hopper.

Plates are removed from their slots by lifting from above. Three or four of the plates can be slowly removed at a time for cleaning, while in service, allowing separator operation to continue uninterrupted.

Draining of the Lamella should be avoided if at all possible until all the plates are removed.

Lamella plates should be removed for cleaning at least once per year.

PERFORMANCE OF LAMELLA

The performance of the lamella clarifier is based on several variables which the owner must control. These variables are:

1) Chemical feed system
2) Floc formation (This can be determined by jar testing)
3) Influent water conditions:

   A) pH
   B) Free of entrained bubbles or gases
   C) Total Suspended Solids
   D) Flow
   E) Temperature

4) Sludge removal or blowdown
5) System design operation
6) V/V - % Solids content of water treated taken at several points in the lamella.
7) Floc Mixer speed

TROUBLESHOOTING GUIDE

The following conditions, causes and actions are listed to assist the operator in troubleshooting the installation:

CONDITION	POSSIBLE CAUSE	ACTION TAKEN
1. Haze in effluent or floc carryover.	Maladjustment of chemicals feeds.	Adjust chemical feeds.
	Fouling of plates.	Clean plates.
	High sludge inventory.	Check changes in chemical feeds and increase blow-down frequency. Decrease flow rate.
	An increase in flow rate.	Increase blowdown frequency. Adjust chemical feed.
	High mixer rate.	Adjust mixer speed.
2. High oil and/or grease in effluent.	High oil influent.	Monitor feed stream and correct. Install oil removal device.
3. Flow surges.	Maladjustment of influent valving or feed stream rate.	Adjust. Monitor feed stream and correct.
4. Unequal distribution of flow or floc carryover.	Maladjustment or dislocation of plate(s).	Check and adjust.
	High or low influent flow to the Lamella.	Monitor and adjust.
	Blockage of some plates at bottom.	Stop flow and blowdown.

TROUBLESHOOTING GUIDE (continued)

CONDITION	POSSIBLE CAUSE	ACTION TAKEN
5. High color in effluent.	Maladjustment of chemical feeds.	Check and adjust.
	Contamination of feed stream.	Monitor and adjust.
	Fouling of plates.	Clean plates.
	High sludge inventory.	Increase blowdown frequency.
6. Plates touching or binding.	Plate flexing.	Check plate mounting and repair according to Graver advice (908)-964-2400.
	Uneven or excessive flow rate.	Monitor and adjust.
7. High sludge inventory.	Maladjustment of chemical feeds.	Check and adjust.
	Incorrect blowdown.	Increase blowdown frequency.
	Plugged sludge pipes.	Unplug sludge piping.
8. Poor flow at end of lamella.	High sludge inventory.	Increase blowdown.

JAR TEST INSTRUCTIONS

Planning the Tests

The Jar Test is a useful tool that can used to predict the proper treatment of various waters on various pieces of equipment manufactured by Graver Water. Additional reading should include Graver Technical Reprint T-177 entitled: Chemical Treatment for Water Clarification.

Refer to the Jar Test sheets at end of this section.

Before starting a series of jar tests, determine the purpose of the tests, then plan the conditions so that only the factor being studied is varied. For example, if it is desired to determine the effect of pH on the floc characteristics, a series of four or five samples should be run in which the coagulant dosage is constant but the alkali dosage is varied so that each sample has a different pH. The order of addition of the chemicals, flash mix and slow mix periods, temperature of the sample and all other variables should be the same in all samples except the alkali dosage.

The order of chemical addition is critical in the planning of the jar test. In order to duplicate the process it is important to add the chemicals in the same order and the same time frame as the full scale machine. Exam the Flow Diagram (P&ID) to determine the order of chemical addition. For heavy metal hydroxide removal the first series of tests should be to establish the pH required (Refer to figures 1 & 2 on solubility). The next series of tests should be done to determine the coagulant and polyelectrolyte dosages required for settling and clarity.

The proper test method is to fill each of the beakers to the desired level with the raw water. The chemicals used for testing should be premixed so that they can be conveniently administered (i.e. lime to be 20ppm/ml, soda ash 10ppm/ml, polyelectrolyte 1ppm/ml). Having all the chemicals the next step is to start the gang stirrer and then to add the chemicals. This must be done quickly and smoothly, if necessary have two people to add the chemicals. When the last jar receives the final chemical start the stop watch and at the end of the flash mix period adjust the stirrer to the correct speed. Observations throughout the entire time is critical. You must observe the formation of floc from the very beginning.

Flash Mixing

During addition of the chemicals, stir the sample vigorously in order to effect quick and thorough mixing. The flash-mix period should not be less than 30 seconds and may usually be as long as 3 to 4 minutes without doing any harm. If the water is warm and the floc forms quickly, then there is some danger that a long flash-mix period will cause the floc which forms to break up. Under such conditions, it is better to run fewer samples or to get help in adding the treatment chemicals so that the flash-mix period can be shortened.

JAR TEST INSTRUCTIONS

Flash Mixing (continued)

In adding the chemicals, too rapid additions should be avoided and approximately the same rate of addition should be used in all samples. With some waters, the order of addition of the alkali, coagulant aid is important. This is particularly true when activated silica is used as the coagulant aid. The effect of the order of addition of the chemicals should be investigated.

Slow Mixing

The purpose of the slow mixing period is to keep the floc particles in intimate contact with the water and circulating continuously so they can "grow." If the stirring is too vigorous, the floc may break up and the results may be poor. If too little stirring is used, the clarifications and color reduction may not be as complete as possible under the conditions of the test because the floc is not being brought into contact with the impurities which it is to remove. Just sufficient agitation should be used to keep the floc uniformly suspended from top to bottom of the sample. Excessive agitation should be avoided, particularly when treating low temperature samples in which the floc tends to be fragile.

In most large-scale coagulant or softening equipment, the slow mixing period is usually 15-20 minutes and, for this reason, the same period should be used in the jar tests.

Throughout the slow mixing period, the sample should be observed carefully and observations recorded on the attached JAR TEST DATA SHEET. The rate of formation of the floc, as well as its size, are important. The appearance of the water between the floc particles should be observed and recorded. Is it sparkling clear? Hazy? Clear but colored? The size of the floc may be described as follows:

Pin-Point - Extremely fine but visible
Fine - Approximate average particle size 1/64".
Small - Approximate average particle size 1/32"
Fair - Approximate average particle size 1/32" to 3/64"
Good - Approximate average particle size 3/64" to 3/32"
Large - Approximate average particle size 1/4" and larger

The dimensions given are only a very rough scale for evaluating a floc. The size of the floc is but one criterion of the effectiveness of a set of treatment conditions. The rate of settling of the floc is more important and the quality of the supernatant water after settling is equally important. All of these points must be observed and recorded.

Generally, the larger the floc particles, the more rapid is its settling rate. However, on certain waters, such as low turbidity, highly colored waters, a large or shaggy floc may settle much slower than a smaller, denser floc.

In reporting jar test observations, besides describing the floc in each jar, it is good practice to give a comparison of the various jars in the series. If there are observable differences, state which jar is best, which is worst, and where the others lie in the series.

JAR TEST INSTRUCTIONS

Settling

At the end of the slow-mix period, stop stirring and allow the floc to settle quiescently. Observe the settling carefully until all of the floc is on the bottom of the jar, or for 20 minutes, whichever is shorter. Report the settling as inches of clear water above the floc at 5 minute intervals or more frequently if the floc settles rapidly. Even with the best coagulating conditions, usually a few individual floc particles remain suspended after the bulk of the floc is completely settled. The amount of STRAGGLERS should be noted and recorded.

The following scale may be used as a rough standard for evaluating settling rates of floc in jar tests. It is based on the period required for the floc to settle 4 inches, which is the approximate depth of a 500 ml. sample in a 600 ml. beaker.

Minutes to Settle 4 Inches	Remarks
Less than 2	**Excellent:** Will give excellent results in upflow solids-contact machines at relatively high rates.
2 to 5	**Good:** Will give good results in upflow solids-contact machines as moderate rates.
5 to 15	**Fair:** Will give satisfactory results in upflow unit if rising rates is low.
Greater than 15	**Poor:** Unless an extremely low rising rate is used, poor results will be obtained.

Treated Water Quality

Generally, the pH, color and turbidity of the supernatant liquid after 30 minutes of settling are measured. In order to save time, a sample for pH determination can be taken toward the end of the slow-mix period. The turbidity of the supernatant can be measured by decanting the sample into a 50 ml. Nessler tube and comparing it with standard turbidity suspensions in matched Nessler tubes. A Baylis or Hellige turbidimeter may also be used. Another convenient method is to prepare standard suspensions (APHA-1946) in the same size vessel as are the samples being run and make the comparison by setting the vessel containing the settled sample along side the well stirred turbidity standards.

Color is measured by the APHA standard method using Nessler tubes or the comparators such as those made by La Motte or Taylor may be used.

If chlorine has been added, the residual chlorine should be measured after 30 to 60 minutes.

JAR TEST INSTRUCTIONS

Treated Water Quality (continued)

Frequently iron, alkalinity, silica and in the case of lime-soda softening tests, total hardness, and calcium hardness are also run on supernatant samples as well as on the filtered samples. For waste treatment applications, the contaminants are measured.

If the quality of the water after filtration is required, the settled sample should be decanted into a funnel into which a small plug of absorbent cotton has been placed. Press the cotton down into the stem of the funnel with a stirring rod. With a properly prepared cotton plug, the sample should filter in the range of 75-150 ml./min. It is good practice to discard the first 75 ml. of filtrate and use a fresh cotton plug for each sample.

Some workers prefer filter paper. A Whatman No. 41-H, acid-treated, fast-filtering paper is satisfactory.

Lime

For the reduction of calcium hardness or alkalinity of the raw water.

Lime and Soda Ash

Lime-Soda softening is the process by which the calcium and magnesium salts are chemically precipitated.

Caustic Soda/Sodium Hydroxide

Used in applications requiring pH adjustment such as heavy metals removal.

Coagulant

For removal of color and turbidity, alum ($Al_2(SO_4)_3 \cdot 14H_2O$) is the most commonly used coagulant. It is not possible to predict the exact dosage of coagulant nor the optimum pH value with any degree of certainty. Jar tests are required to determine the specific treatment condition most suitable for a given water. Even then, the conditions which give good results at one time may not be satisfactory at another time on the same supply. This may be due to changes in the concentration or the nature of the impurities or the temperature or all three.

In general, best color reduction is obtained with alum in the pH range from 5.5 to 6.5. If prechlorination is used, good results are frequently obtained at pH values as high 7.5. The colored impurities in highly colored waters tend to stabilize the small floc particles which form early in the treatment and prevent them from growing larger. Chlorination partially destroys these colored substances, reducing this stabilizing action and producing a lower residual color for a given coagulant dosage.

JAR TEST INSTRUCTIONS

Coagulant (continued)

Where turbidity removal is the main problem, alum will usually coagulate best in the pH range of 6.5 to 8.5. Frequently, the use of lime for pH adjustment rather than sodium carbonate will produce a better result.

Ferric sulfate is being widely used as a coagulant. The floc formed with it tend to be faster settling than alum floc. For turbidity removal, best results are usually obtained in the pH range of 8.0 to 9.5. Color removal is usually poor in these high pH ranges, but by adding chlorine in the treatment adequate color reduction can frequently be obtained. Where color reduction is the main requirement and on waters contaminated with organic wastes, best results are usually obtained with ferric sulfate at low pH values in the range of 5.0 to 6.3.

Ferrous sulfate (copperas) is used in many coagulation plants. It has the same general characteristics as ferric sulfate because in most cases, there is sufficient oxygen in the water to oxidize the ferrous iron to ferric.

Sodium aluminate is sometimes used alone or in conjunction with alum and has the effect of broadening the pH range so the treatment is easier to control.

C agulant Aids

Activated silica, which is a colloidal dispersion of silica prepared by reducing the pH of a dilute sodium silicate solution by the addition of suitable reagents, is generally an effective coagulant aid. It is usually used with alum although its applicability to coagulation with iron salts has been reported. The dosage range is 0.5 to 1.5 ppm silica per grain/gallon of coagulant.

The order of addition of the activated silica is very important and should be investigated whenever it is used. In general, on highly colored, low turbidity waters, best results will be obtained if it is added after the alum and alkali (if any) and sufficient time is allowed for the appearance of the first visible floc. In other cases, greatest benefit may be obtained by adding the activated silica before the other reagents. The best procedure is to determine the optimum pH range first without adding activated silica, then run a series in which the activated silica is added before the other reagents in one sample and after them, in another. If 4 jars can be run in a series, two different activated silica dosages can be tried in the same series.

Polyelectrolytes - Polymers

This family of chemicals is available in Cationic, Anionic and Non-Ionic varieties and at various molecular weights. The benefit of this class of chemicals is that they condition the floc and allow for better settling characteristics.

JAR TEST INSTRUCTIONS

Clay

When treating low turbidity waters, the addition of ARTIFICIAL TURBIDITY in the form of finely divided clay is frequently found to be very beneficial. It can be added ahead of the other reagents. Various types of clay have been used successfully including Georgia Kaolin, Fullers Earth, Wyoming and Mississippi bentonite and clay obtained from local deposits near the treating plant. The non-swelling types of clays should be crushed to pass a 200 mesh screen.

Solids Contact

It is sometimes desired to determine the effect of solids-contact (the presence of a substantial concentration of previously formed precipitates) on the floc characteristics and the quality of the treated water. First determine the optimum coagulation conditions, then treat a number of sample or one large sample using the optimum treatment conditions. After the floc (precipitates) has settled, decant the supernatant water and save the precipitates. When a sufficient quantity has been accumulated to equal approximately 5-10% of the volume of sample being treated, add the precipitates to a sample, then add the treatment chemicals and observe the results. A control sample should be run in parallel with the same dosages but without the addition of previously accumulated precipitates.

Reagent Solutions and Suspensions

The sample volumes most frequently used are 500 ml., 1000 ml., 1 quart or 1 gallon. In the following table, the reagent concentration most conveniently used with each sample size is given. Of course, any of the solutions can be used with any of the sample volumes but the advantage of using particular reagent concentrations given is to obtain simple whole number conversion factors from ml. of reagent to grains per gallon.

Sample Volume	Grams/Liter	Grams/Quart	Grains/Gallon	ml. Reagent Equal to Dosage 1 Gr./Gal.
500 ml.	8.55	8.1	500	1.0
1000 ml.	8.55	8.1	500	2.0
1 Quart	8.08	7.65	473	2.0
1 Gallon	6.49	6.12	379	10.0

The standard jar test can be supplemented with tests on samples taken from the top of the draft tube. The sample is placed in a 500 ml. graduate, and the time required for the sludge to settle a specific distance is noted. The exact procedure is given later. This observation provides the settling velocity of the particles being produced. This tells us:

1. The rise rate that the unit can operate at, with the existing chemical feed.

JAR TEST INSTRUCTIONS

2. If this result is different than those obtained from the jar test, it tells us:

   a. The chemical feed system is not working properly i.e. - We are not delivering what we think, or

   b. Recirculator is breaking up floc, or

   c. Polymer has deteriorated or

   d. Unknown factor at specific site.

3. If a second sample is taken and more polymer added, the test will tell us if increasing the polymer will help or not.

4. The same test repeated with other polymers tell us if they will work any better than the original one.

PROCEDURES

I. Settling Velocity and Unit Capacity

1. Fill a 500 ml. graduate cylinder with a sample from the top of the draft tube or lamella inlet.

2. Mix with slow movements but rapid enough to prevent floc from settling. Mix for two minutes. A mixer can be made from a rubber stopper and a lab wire brush.

3. Allow a short time for eddy convection currents to cease.

4. Measure the height of the clear zone in the top of the graduate at 1, 3, 5 and 10 minutes.

The settling velocity or unit upflow capacity is:

$$GPM/FT^2 = \frac{\text{inches clear}}{\text{time}} \times 0.623$$

For a Lamella, Multiply Answer by 1.22

II. Effect of Additional Polymer

1. Fill one or more 500 ml. graduate cylinders with samples from top of draft tube or lamella inlet.

2. Add polyelectrolyte as required in various dosages. Mix fast for 15 seconds without whipping in air.

3. When eddy currents cease, start timing clear zone.

JAR TEST INSTRUCTIONS

III. Jar Test Speeds for Specific Equipment

Equipment	Flash Mix Time	Flash Mix Speed	Slow Mix Time	Slow Mix Speed	Settle Time
Lamella	1 minute	80 rpm	4 minutes	20 rpm	5-10 minutes

JAR TEST DATA SHEET

Date: _____ Subject: _____
Series No.: _____ Purpose: _____

Raw Water Characteristics:

Turbidity _____ CaH _____
Color _____ MgH _____
Alk. M. _____ Alk. P. _____
Color _____ MgH _____

Test Characteristics:

Flash Mix _____ Min. _____ RPM
Slow Mix _____ Min. _____ RPM
Temp. (°F) _____ Start _____ End
Beaker Size _____

Record of Jar Treatments

Jar No.	Treatment Chemicals					Settled		Filter Color	Alk.		CaH	T	Remarks
						Tur	pH		P	M			
1													
2													
3													
4													
5													
6													

Observations - Character of Floc During Slow Mix Period

Min.	1	2	3	4	5	6

Observations - Settling of the Floc

Min.	1	2	3	4	5	6

Conclusions:

GRAVER JOB NO. 12835

SECTION 3 INDEX

BILL OF MATERIAL

BILL OF MATERIAL INSTRUCTION SHEET

1. USE OF BILL OF MATERIAL

A. Please store the Bill of Material in a safe but convenient place.

B. The Bill of Material has a Title Sheet, an Index of Releases, an Index of Items, followed by the pages for each individual release.

C. The Bill of Material is divided into releases. These releases define the various subsystems you have purchased, such as "filters" or regeneration skid". Each release is a group of related components that have been assigned the same release number (such as 051E or 051I). The components in the release are broken down to smaller, closer related components and each subgroup is assigned a W.O. (Work Order) number that follows the release number (such as 051E-0001). The components in this subgroup are further broken down into individual items and given an item number (such as 051E-0001-0024). The Full Index of Releases lists all of the subdivisions (Release Numbers) we have created for your project. Each release should be considered a separate document with its own issue (revision) level. Within each release, items are identified by a work order number or an item number.

D. Release numbers are made up of two numerals followed by a letter. The letter is an "E" for equipment releases or an "I" for instrument releases.

E. The Index of Releases lists for each release: the release number, the issue number, issue date, number of pages in a release, description of release and status.

F. A Packing List will accompany all shipments which will describe each major item by Bill of Material release, work order and item numbers. When contacting Graver please refer to these numbers.

G. To locate an item in the Bill of Material, find the appropriate release from the Index of Releases, then turn to the summary page of the appropriate release. This will be at the end of the release. Items will be sorted on the summary page first by work order and then by item number. The summary page will list the page number that the item will be found and on what issue this item was last revised.

JOB # 012835

GRAVER WATER
Division of The Graver Company

BILL OF MATERIAL
TITLE SHEET
CUSTOMER COPY

TYPE OF EQUIPMENT	LAMELLA SEPARATOR MODEL 10625RLF
USER	BRUNSWICK AIR STATION
LOCATION	BRUNSWICK, MAINE
PURCHASER	H. E. SARGENT
PURCHASER'S P.O. #	MC-9408-6

PRINT DATE: 02/22/95

BILL OF MATERIAL - CUSTOMER COPY

FULL INDEX OF RELEASES

JOB NUMBER: 012835

RELEASE	ISSUE	ISSUE DATE	PAGES	DESCRIPTION	STATUS
011E	08	01/31/95	001 - 005	LAMELLA SEPARATOR	FINAL

PRINT DATE: 02/22/95

FINAL BILL OF MATERIAL - CUSTOMER COPY

JOB NUMBER: 012835

FULL INDEX OF ITEMS

CATEGORY	RELEASE	WO	ITEM	PAGE	ISSUE
	011E	0002 /	0001	002	
	011E	0001 /	0001	001	
TANKAGE	011E	0002 /	0007	002	07
TANKAGE	011E	0003 /	0002	004	02
LINING	011E	0002 /	0003	002	01
LINING	011E	0002 /	0005	002	01
LINING	011E	0002 /	0004	002	01
LINING	011E	0002 /	0002	002	01
INTERNALS	011E	0002 /	0008	002	02
MDE	011E	0002 /	0010	003	05
MDE	011E	0002 /	0009	003	05
INVENTORY	011E	0003 /	0001	004	02
INVENTORY	011E	0002 /	0006	002	02

PRINT DATE: 02/22/95
ISSUE: 08

FINAL BILL OF MATERIAL - CUSTOMER COPY
LAMELLA SEPARATOR

JOB NUMBER: 012835
RELEASE: 011E
PAGE: 001

WO /ITEM	ENTRY	DRAWING	QUANTITY	DESCRIPTION	WHERE USED	CATEGORY
0001/0001 0002	101.00	T-45651	1	LAMELLA SEPARATOR MODEL #10625RLF		

PRINT DATE: 02/22/95
ISSUE: 08

FINAL BILL OF MATERIAL - CUSTOMER COPY
LAMELLA SEPARATOR
LAMELLA SEPARATOR MODEL #10625RLF

JOB NUMBER: 012835
RELEASE: 011E

WO /ITEM	ENTRY	DRAWING	QUANTITY	DESCRIPTION	WHERE USED	CATEGORY
		T-47055	1	LAMELLA SEPARATOR MODEL #10625RLF		
0002/0007 F	101.00	T-45651	1	LAMELLA SEPARATOR MODEL #10625RLF CLEANED AND PAINTED PER W.O. ITEMS 0002 THRU 0005.		TANKAGE
0002/0001 0003	102.00		1	GRAVER NAMEPLATE ASSEMBLY		
0002/0002 TS	103.00			INTERIOR SURFACES TO BE CLEANED TO A NEAR-WHITE BLAST PER SSPC-SP10-63T		LINING
0002/0003 TS	104.00			INTERIOR OF TANK TO BE COATED WITH POLYAMIDE EPOXY APPLICATION: TWO COATS MINIMUM, 7-11 MILS TDFT APPLY PER MANUFACTURERS RECOMMENDATION MANUFACTURER: TNEMEC COMPANY PRIMER: TNEMEC 161-211 (GRAY) 3-5 MILS TDFT FINISH: TNEMEC 161 (NAVY BLUE) 4-6 MILS TDFT		LINING
0002/0005 TS	104.00			EXTERIOR OF TANK TO BE COATED WITH POLYAMIDE EPOXY APPLICATION: TWO COATS MINIMUM, 7-11 MILS TDFT APPLY PER MANUFACTURERS RECOMMENDATION MANUFACTURER: TNEMEC COMPANY PRIMER: TNEMEC 161-211 (GRAY) 3-5 MILS TDFT FINISH: TNEMEC 161 (BLUE) 4-6 MILS TDFT		LINING
0002/0004 TS	105.00			EXTERIOR SURFACES TO BE CLEANED TO A NEAR-WHITE BLAST PER SSPC-SP10-63T		LINING
0002/0008 F	107.00		11	LAMELLA PLATE 4' x 8' x 3/16" THICK		INTERNALS
0002/0006 F	108.00		3	BALL VALVE, MANUAL MANUFACTURER: GRAVER SIZE: 1/2" MODEL NO: 0165006 PRESSURE RATING: 400 WOG, 150# STEAM END CONNECTIONS: SCREWED MATERIALS OF CONSTRUCTON: BODY: BRONZE SEATS: REINFORCED TFE WITH GRAVER LOGO HANDLE		INVENTORY

PRINT DATE: 02/22/95
ISSUE: 08

FINAL BILL OF MATERIAL - CUSTOMER COPY
LAMELLA SEPARATOR
LAMELLA SEPARATOR MODEL #10625RLF

JOB NUMBER: 012835
RELEASE: 011E

WO /ITEM	ENTRY	DRAWING	QUANTITY	DESCRIPTION	WHERE USED	CATEGORY
0002/0010 F	109.00		1	MIXER MANUFACTURER: BRAWN MIXER, INC. MODEL: BD50 TYPE: DIRECT DRIVEN, PORTABLE CLAMP MOUNTED MATERIAL OF CONSTRUCTION: HOUSING: ALUMINIUM SHAFT: 316 SS - .75" DIA. X 36" LONG IMPELLER: 316 SS - SINGLE 4" DIA. MOTOR: 1/2 HP, 115 V, 1 PH, 60 HZ, 1750 RPM, TEFC, CHEMICAL DUTY TAG: FLASH MIXER		MDE
0002/0009 F	110.00		1	MIXER, MANUFACTURER: BRAWN MIXER, INC. MODEL: SG33 TYPE: GEAR DRIVEN, PORTABLE CLAMP MOUNTED MATERIAL OF CONSTRUCTION: HOUSING: ALUMINIUM SHAFT: 316 SS, .625" DIA. X 48" LONG IMPELLER: 316 SS, SINGLE 11.5" DIA. SPEED CONTROLER: MFR.- RELIANCE TYPE: DC2-70, NEMA 12 ENCLOSURE, 1/3 HP, 115V, 1 PH, 50/60 HZ MOTOR: 1/3 HP, DC, 1750 RPM, TEFC, CHEMICAL DUTY MOTOR SPEED CONTROLLED BY SCR SPEED CONTROLLER MIXER OUTPUT SPEED ADJUSTABLE FROM 20-350 RPM. TAG: FLOC. MIXER		MDE

PRINT DATE: 02/22/95
ISSUE: 08

FINAL BILL OF MATERIAL - CUSTOMER COPY
LAMELLA SEPARATOR
GRAVER NAMEPLATE ASSEMBLY

JOB NUMBER: 012835
RELEASE: 011E
PAGE: 004

WO /ITEM	ENTRY	DRAWING	QUANTITY	DESCRIPTION	WHERE USED	CATEGORY
			1	GRAVER NAMEPLATE ASSEMBLY		
0003/0001 TS	301.00		1	GRAVER WATER DIVISION OF THE GRAVER COMPANY NAMEPLATE		INVENTORY
0003/0002 TS	302.00		1	NAMEPLATE BRACKET		TANKAGE

FINAL BILL OF MATERIAL - CUSTOMER COPY
LAMELLA SEPARATOR
SUMMARY

RELEASE	WO	ITEM	PAGE	ISSUE
011E	0001 /	0001	001	
011E	0002 /	0001	002	
011E	0002 /	0002	002	01
011E	0002 /	0003	002	01
011E	0002 /	0004	002	01
011E	0002 /	0005	002	01
011E	0002 /	0006	002	02
011E	0002 /	0007	002	07
011E	0002 /	0008	002	02
011E	0002 /	0009	003	05
011E	0002 /	0010	003	05
011E	0003 /	0001	004	02
011E	0003 /	0002	004	02

GRAVER JOB NO. 12835

SECTION 4 INDEX

DRAWING

Legend	Number
Assembly, Lamella Clarifier - Model 10625RLF	T-45651

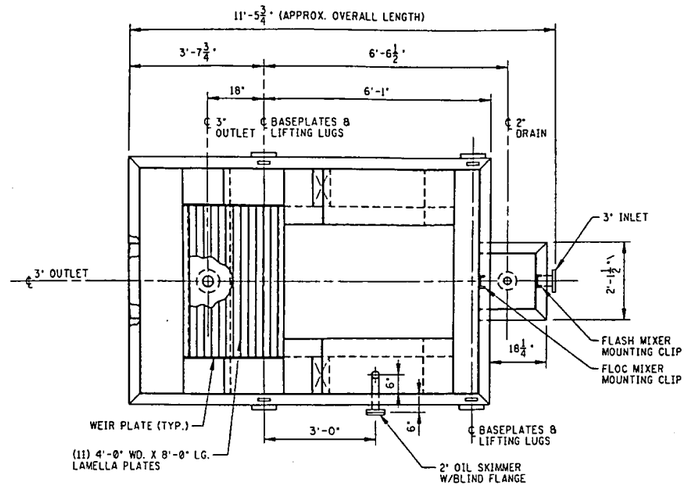

PLAN

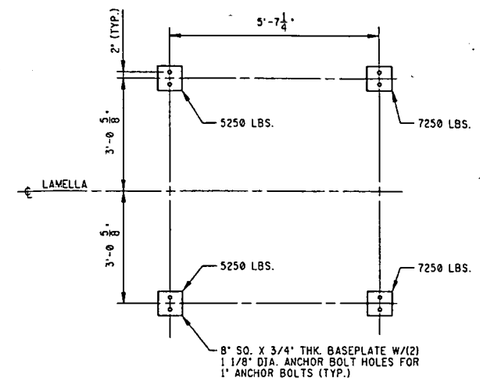

FOUNDATION DETAIL

(WEIGHTS SHOWN ARE FOR FLOODED WEIGHT)

NOTES:

1. ALL FLANGES TO BE STEEL, FLAT FACE, SLIP-ON WITH CL 150 DRILLING STRADDLING VERTICAL AND HORIZONTAL CENTERLINES. COMMERCIAL FLANGES SHALL BE USED FOR SIZES UP TO AND INCLUDING 8". LARGER SIZES MAY BE FABRICATED FROM PLATE PER AWWA 207, TABLE 1, CLASS D.
2. CLEARANCE OF 6'-7" REQUIRED ABOVE TOP OF TANK FOR REMOVAL OF LAMELLA PLATES. LAMELLA PLATES ARE SHIPPED LOOSE FOR FIELD LOADING INTO THE TOP OF THE TANK.
3. GRAVER ASSUMES NO RESPONSIBILITY FOR CONCRETE DESIGN.
4. LAMELLA SEPARATOR SHIPPED COMPLETELY ASSEMBLED FOR SHIPMENT.
5. CUSTOMER TO MAKE PROVISION FOR ACCESS TO TOP OF TANK FOR LAMELLA PLATE REMOVAL. PROPER SAFETY PROCEDURES TO BE USED DURING INSTALLATION OR REMOVAL OF PLATES.
6. ELEVATION OF WEIR TO BE ADJUSTED IN FIELD TO GIVE 4 1/2" FREEBOARD AS SHOWN IN WEIR DETAIL.
7. DUE TO NORMAL FABRICATION TOLERANCES, CUSTOMER TO MAKE PROVISION IN HIS PIPING FOR FIELD FIT-UP.
8. EXTERIOR AND INTERIOR SURFACE PREP. PER SSPC-SP-10 (NEAR WHITE METAL BLAST). EXTERIOR TO BE PRIMED WITH TNEMEC 161-211 (GRAY) @3 TO 5 MILS TDFT, THEN FINISH PAINTED WITH TNEMEC 161 @ 4 TO 6 MILS TDFT. (SAFETY BLUE) INTERIOR TO BE PRIMED WITH TNEMEC 161-1211 (GREY) @ 3 TO 5 MILS TDFT. (BLUE) THEN FINISH PAINTED WITH TNEMEC FC20 @ 4 TO 6 MILS TDFT.
9. LAMELLA PLATES ARE MADE OF FLAMMABLE MATERIAL AND THUS, WHEN THEY ARE NOT IMMERSED, CARE SHOULD BE TAKEN AGAINST ACCIDENTAL IGNITION. SEE OPERATING INSTRUCTIONS.
10. VERTICAL DIMENSIONS ARE REFERENCED FROM THE "COMMON BASE LINE", BOTTOM OF STEEL (B.O.S.).
11. UNIT TO BE DESIGNED TO UBC SEISMIC ZONE 2.

DESIGN DATA:

EFFECTIVE PROJECTED PLATE AREA:	188.4 FT^2
LAMELLA SPACING:	2" (REF.)
RATED FLOW:	30 GPM
MAXIMUM FLOW:	33 GPM
FLASH VOLUME:	110 GALS.
FLOC VOLUME:	660 GALS.
SHIPPING WEIGHT LAMELLA:	6,900 LBS. (APPROX.)
FLOODED WEIGHT LAMELLA:	25,000 LBS. (APPROX.)

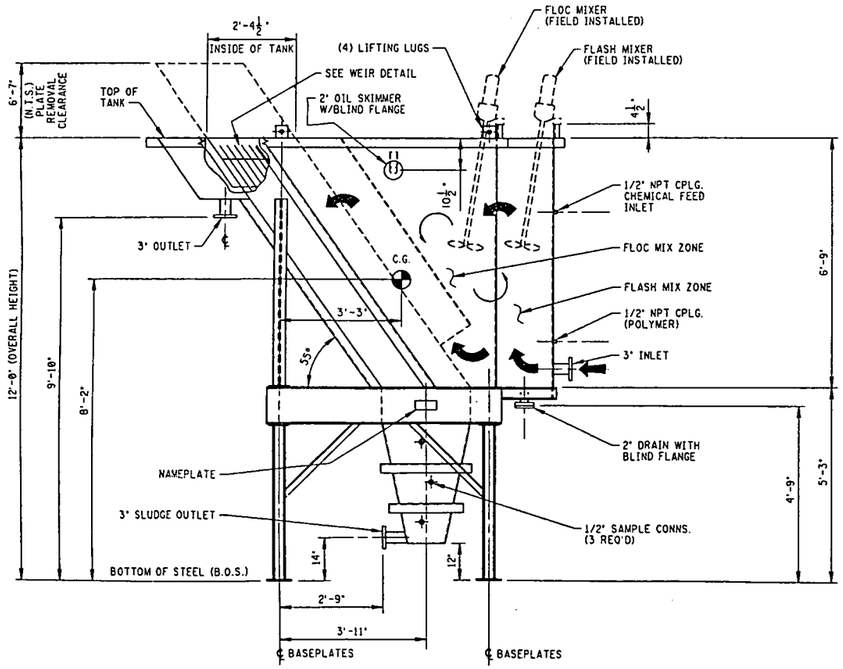

ELEVATION

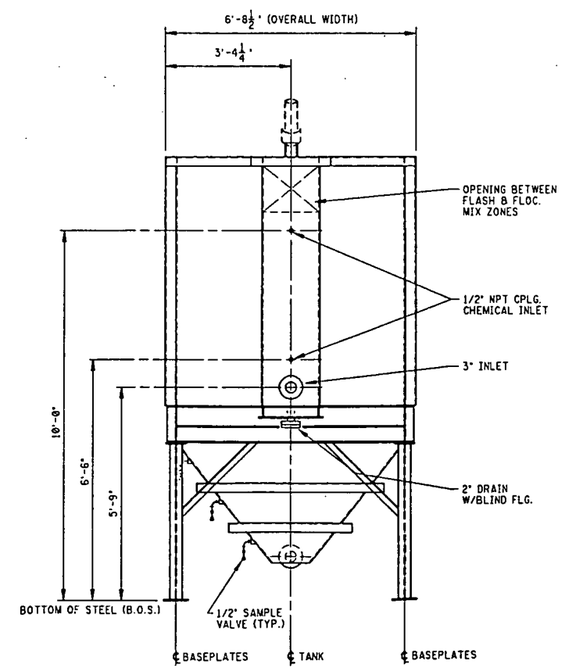

END ELEVATION

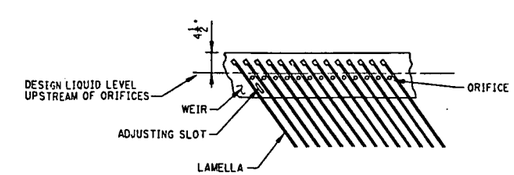

WEIR DETAIL

NO SCALE

94-11-17 8:15:13 CAD FILE: 12835.M.LAMELLA.10625RLF.LAYOUT DRAW T-47055

THIS DRAWING IS THE PROPERTY OF THE GRAVER WATER DIVISION OF THE GRAVER COMPANY. IT IS NOT TO BE USED FOR ANY PURPOSES DETRIMENTAL TO THE INTEREST OF THIS COMPANY AND IS SUBJECT TO RETURN UPON REQUEST.

REV.	DATE	REMARKS	BY	CHK.	REV.	DATE	REMARKS	BY	CHK.	REV.	DATE	REMARKS	BY	CHK.
										A	11-16-94	INITIAL ISSUE	SB	

REM SITES 1,3,5,6 & 8 AND
EASTERN PLUME NASB REMEDIATION PROJECT
BRUNSWICK, MAINE

GRAVER JOB 12835

SCALE	1/2" = 12"	
	BY	DATE
DRAWN	SB	11-15-94
CHECKED		
CERTIFIED		

ASSEMBLY
LAMELLA SEPARATOR
MODEL 10625RLF

GRAVER WATER
Division of The Graver Company
A member of The Marmon Group of companies

T- 45651 REV. A

3/94 C DO NOT SCALE THIS DRAWING - USE DIMENSIONS ONLY

Installation and Operating Instructions

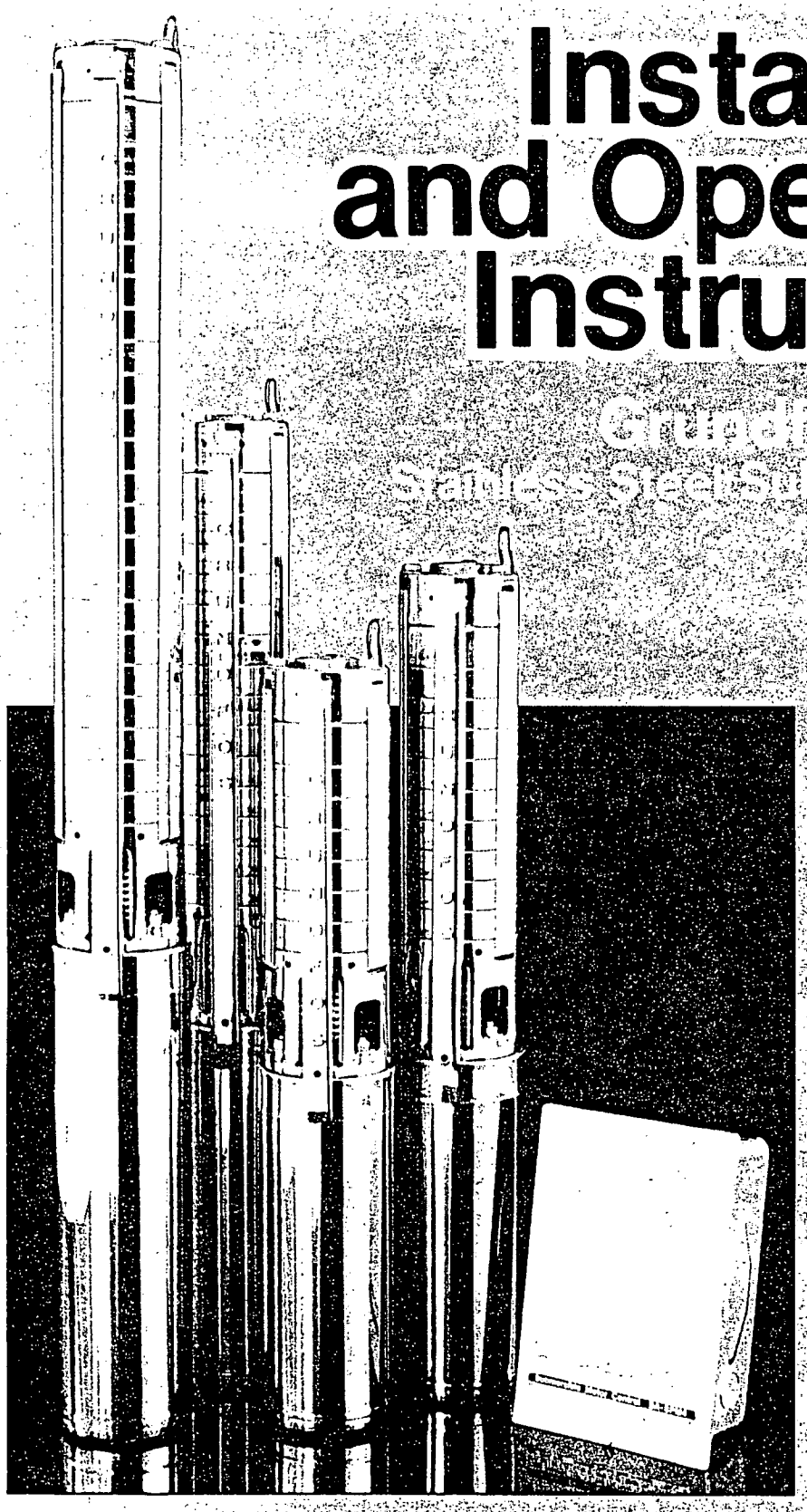

1. Shipment Inspection — Page 1
2. Pre-Installation Checklist — Page 1
3. Wire Cable Type — Page 2
4. Installation — Page 2
5. Electrical — Page 3
6. Start-Up — Page 4
7. Troubleshooting — Page 4

Please leave these instructions with the pump

2M COMPANY, INC.
1215 CORDOVA
BILLINGS, MT 59101
406-245-3008

Installation and Operating Instructions

TABLE OF CONTENTS

SECTION 1
Shipment Inspection . . . . . Page 1

SECTION 2
Pre-Installation Checklist . . . . . Page 1

SECTION 3
Wire Cable Type . . . . . Page 2

SECTION 4
Installation . . . . . Page 2

SECTION 5
Electrical . . . . . Page 3
- Engine Driven Generators 3
- Control Box, Single-Phase Motors 3
- High Voltage Surge Arresters 3
- Control Box and Surge Arrester Grounding 3
- Wiring Checks 3

SECTION 6
Start-Up . . . . . Page 4
Operation . . . . . Page 4

SECTION 7
Troubleshooting . . . . . Page 4
- Preliminary Tests 5
- Troubleshooting Chart 6
- Table A 6
- Table B 6
- Table C 7
- Table D 7

Installation and Operating Instructions

GRUNDFOS

Redi-Flo4

Your Grundfos Redi-Flo4 Environmental Pump is of the utmost quality. Combined with proper installation, your Grundfos pump will give you many years of reliable service.

To ensure the proper installation of the pump, carefully read the complete manual before attempting to install the pump.

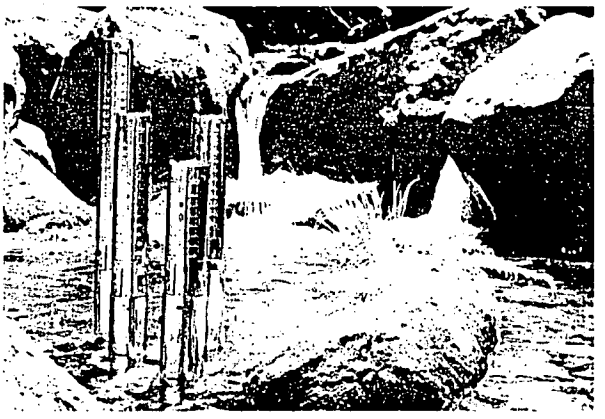

SECTION 1.

Shipment Inspection

Examine the components carefully to make sure no damage has occurred to the pump-end, motor, cable or control box during shipment.

This Grundfos Redi-Flo4 Environmental Pump should remain in its shipping carton until it is ready to be installed. The carton is specially designed to protect it from damage. During unpacking and prior to installation, **make sure that the pump is not contaminated, dropped or mishandled.**

The motor is equipped with an electrical cable. **Under no circumstance should the cable be used to support the weight of the pump.**

You will find a loose data plate wired to the pump. It should be securely mounted at the well or attached to the control box.

SECTION 2.

Pre-Installation Checklist

Before beginning installation, the following checks should be made. They are all critical for the proper installation of this submersible pump.

☑ **A. CONDITION OF THE WELL**

If the pump is to be installed in a new well, the well should be fully developed and bailed or blown free of cuttings and sand. Dispose of discharged materials in accordance with the specific job site requirements. The stainless steel construction of the Redi-Flo4 Environmental Pump makes it resistant to abrasion; however, no pump, made of any material, can forever withstand the destructive wear that occurs when constantly pumping sandy groundwater.

Determine the maximum depth of the well, and the drawdown level at the pump's maximum capacity. Pump selection and setting depth should be based on this data.

The inside diameter of the well casing should be checked to ensure that it is not smaller than the size of the pump and motor.

☑ **B. CONDITION OF THE WATER**

Redi-Flo4 pumps are designed for pumping cold groundwater that is free of air or gases. Decreased pump performance and life expectancy can occur if the groundwater is not cold or contains air or gases.

☑ **C. INSTALLATION DEPTH**

Pumping sand or well sediment can occur when the pump motor is installed lower than the top of the well screen or within five feet of the well bottom. This can reduce the performance and life expectancy of the pump and should be avoided.

If the pump is to be installed in a lake, containment pond, tank or larger diameter well, the water velocity passing over the motor must be sufficient to ensure proper motor cooling. The minimum recommended water flow rates which ensure proper cooling are listed in Table A.

☑ **D. ELECTRICAL SUPPLY**

The motor voltage, phase and frequency indicated on the motor nameplate should be checked against the actual electrical supply.

SECTION 3.

Wire Cable Type

The type of wire used between the pump and control box should be approved for submersible pump applications. The conductor insulation should have a continuous Teflon® jacket with no splices and must be suitable for use with submersible pumps.

SECTION 4.

Installation

The riser pipe or hose should be properly sized and selected based on estimated flow rates and friction-loss factors.

A back-up wrench should be used when attaching a riser pipe or metallic nipple to the pump. The pump should only be gripped by the flats on the top of the discharge chamber. **The body of the pump, cable guard or motor should not be gripped under any circumstance.**

If steel riser pipe is used:

An approved pipe thread compound should be used on all joints. Make sure the joints are adequately tightened in order to resist the tendency of the motor to loosen the joints when stopping and starting.

When tightened, the first section of the riser pipe must not come in contact with the check valve retainer in the discharge chamber of the pump.

After the first section of the riser pipe has been attached to the pump, the lifting cable or elevator should be clamped to the pipe. **Do not clamp the pump.** When raising the pump and riser section, be careful not to place bending stress on the pump by picking it up by the pump-end only.

Make sure that the electrical cables are not cut or damaged in any way when the pump is being lowered in the well.

The drop cable should be secured to the riser pipe at frequent intervals using an approved clip or tape to prevent sagging, looping and possible cable damage.

If plastic or flexible riser pipe is used:

Use the correct compound recommended by the pipe manufacturer or specific job specifications. Besides making sure that joints are securely fastened, the use of a torque arrester is recommended when using these types of pipe.

Do not connect the first plastic or flexible riser section directly to the pump. Always attach a metallic nipple or adapter into the discharge chamber of the pump. When tightened, the threaded end of the nipple or adapter must not come in contact with the check valve retainer in the discharge chamber of the pump.

The drop cable should be secured to the riser pipe at frequent intervals using an approved clip or tape to prevent sagging, looping and possible cable damage.

IMPORTANT- Plastic and flexible pipe tend to stretch under load. This stretching must be taken into account when securing the cable to the riser pipe. Leave enough slack between clips or taped points to allow for this stretching. This tendency for plastic and flexible pipe to stretch will also affect the calculation of the pump setting depth. If the depth setting is critical, check with the manufacturer of the pipe to determine how to compensate for pipe stretch.

When these types of pipe are used, it is recommended that a safety cable be attached to the pump to lower and raise it. The discharge piece of Redi-Flo4 submersibles is designed to accommodate this cable. (Figure 4)

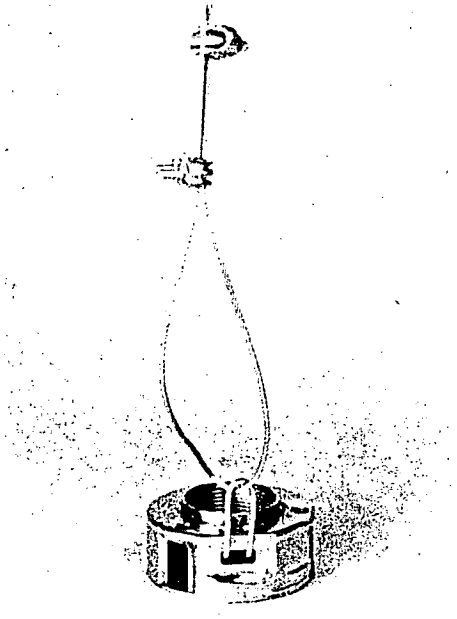

Protect the well from contamination:

While installing the pump, proper care should be used not to introduce foreign objects or contaminants into the well. The well should be finished off above grade to protect against surface water from entering the well, causing contamination.

NOTE: Teflon® is a registered trademark of DuPont.

SECTION 5.

Electrical

WARNING: A faulty motor or wiring can be a serious electrical shock hazard if it or surrounding water is accessible to human contact. To avoid this danger, connect the motor frame to the power supply grounding terminal with copper conductor no smaller than the circuit conductors unless the motor and surrounding water are inaccessible, as in a drilled well. In all installations connect above ground metal plumbing to the power supply ground per National Electrical Code Article 250-80 to prevent electrical shock hazard.

All electrical work should be performed by a qualified electrician in accordance with the latest edition of the National Electrical Code, local codes and regulations.

Verification of the electrical supply should be made to ensure the voltage, phase and frequency match that of the motor. Motor voltage, phase, frequency and full-load current information can be found on the nameplate attached to the motor. Motor electrical data can be found in Table C.

If voltage variations are larger than ± 10%, do not operate the pump.

Direct on-line starting is used due to the extremely fast run-up time of the motor (0.1 second maximum), and the low moment of inertia of the pump and motor. Direct on-line starting current (locked rotor amp) is between 4 and 6.5 times the full-load current.

Engine-Driven Generators

If the Redi-Flo4 pump is going to be operated using an engine driven generator, we suggest the manufacturer of the generator be contacted to ensure the proper generator is selected and used. See Table B for generator sizing guide.

Control Box, Single-Phase Motors

Single-phase motors must be connected as indicated in the motor control box. A typical single phase wiring diagram using a Grundfos control box is shown. (Figure 5-A)

High Voltage Surge Arresters

A high voltage surge arrester should be used to protect the motor against lightning and switching surges.

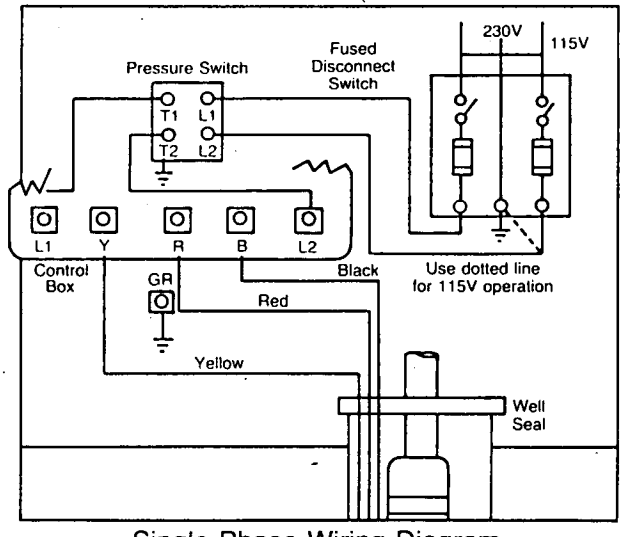

Single Phase Wiring Diagram for Grundfos Control Boxes
(Figure 5-A)

The correct voltage-rated surge arrester should be installed on the supply (line) side of the control box. (Figure 5-B) **The arrester must be grounded in accordance with the National Electric Code, local codes and regulations.**

Control Box and Surge Arrester Grounding

The control box shall be permanently grounded in accordance with the National Electrical Code and local codes or regulations. The ground wire should be a bare copper conductor at least the same size as the drop cable wire size. The ground wire should be run as short a distance as possible and be securely fastened to a true grounding point.

True grounding points are considered to be: a grounding rod driven into the water strata, steel well casing submerged into the water lower than the pump setting level, and steel discharge pipes without insulating couplings. If plastic discharge pipe and well casing are used, a properly sized bare copper wire should be connected to a stud on the motor and run to the control panel. Do not ground to a gas supply line. Connect the grounding wire to the ground point first and then to the terminal in the control box.

Wiring Checks

Before making the final wiring connections of the drop cable to the control box terminal, it is a good practice to check the insulation resistance to ensure that the cable is good. Measurements for a new installation must be at least 1,000,000 ohm. Do not start the pump if the measurement is less than this. If it is higher, finish wiring and verify that all electrical connections are made in accordance with the wiring diagram. Check to ensure the control box and high voltage surge arrester have been grounded.

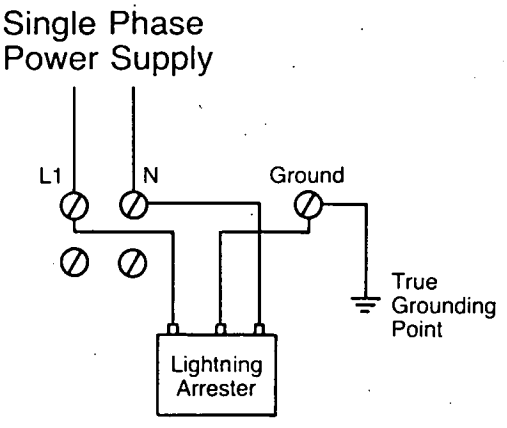

Single Phase Hookup
(Figure 5-B)

SECTION 6.

Start-Up

After the pump has been set into the well and the wiring connections have been made, the following procedures should be performed.

A. Attach a temporary horizontal length of pipe with installed gate valve to the riser pipe.

B. If required, make provisions to capture discharged fluids for disposal.

C. Adjust the gate valve one-third open.

D. Start the pump and let it operate until the water runs clear of sand and silt.

E. As the water clears, slowly open the gate valve in small increments until the desired flow rate of clear water is reached. The pump should not be operated beyond its maximum flow rating and should not be stopped until the groundwater runs clear.

F. If the groundwater is clean and clear when the pump is first started, the valve should still be opened until the desired flow rate is reached.

G. Disconnect the temporary piping arrangements and complete the final piping connections.

H. **Under no circumstances should the pump be operated for any prolonged period of time with the discharge valve closed.** This can result in motor damage due to overheating. A properly sized relief valve should be installed at the well head to prevent the pump from running against a closed valve.

I. Start the pump and test the system. Check and record the voltage and current draw on each motor lead.

Operation

A. The pump and system should be periodically checked for water quantity, pressure, drawdown, periods of cycling, and operation of controls. **Under no circumstances should the pump be operated for any prolonged periods of time with the discharge valve closed.** This can result in motor and pump damage due to overheating.

A properly sized relief valve should be installed at the well head to prevent the pump from running against a closed valve.

B. If the pump fails to operate, or there is a loss of performance, refer to Troubleshooting, Section 7.

SECTION 7.

Troubleshooting

The majority of problems that develop with submersible pumps are electrical, and most of these problems can be corrected without pulling the pump from the well. The following charts cover most of the submersible service work. As with any troubleshooting procedure, start with the simplest solution first; always make all the above-ground checks before pulling the pump from the well.

Usually only two instruments are needed – a combination voltmeter/ammeter, and an ohmmeter. These are relatively inexpensive and can be obtained from most water systems suppliers.

WHEN WORKING WITH ELECTRICAL CIRCUITS, USE CAUTION TO AVOID ELECTRICAL SHOCK. It is recommended that rubber gloves and boots be worn and that care is taken to have metal control boxes and motors grounded to power supply ground or steel drop pipe or casing extending into the well. WARNING: Submersible motors are intended for operation in a well. When not operated in a well, failure to connect motor frame to power supply ground may result in serious electrical shock.

Preliminary Tests

SUPPLY VOLTAGE

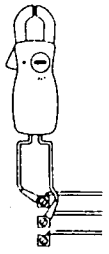

How to Measur

By means of a voltmeter, which has been set to the proper scale, measure the voltage at the control box. On single-phase units, measure between line and neutral.

What it M ans

When the motor is under load, the voltage should be within ± 10% of the nameplate voltage. Larger voltage variation may cause winding damage.

Large variations in the voltage indicate a poor electrical supply and the pump should not be operated until these variations have been corrected.

If the voltage constantly remains high or low, the motor should be changed to the correct supply voltage.

CURRENT MEASUREMENT

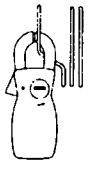

How to Measure

By use of an ammeter, set on the proper scale, measure the current on each power lead at the control box. See the Electrical Data, Table C, for motor amp draw information.

Current should be measured when the pump is operating at a constant discharge pressure with the motor fully loaded.

What it Means

If the amp draw exceeds the listed service factor amps (SFA), check for the following:

1. Loose terminals in control box or possible cable defect. Check winding and insulation resistances.
2. Too high or low supply voltage.
3. Motor windings are shorted.
4. Pump is damaged causing a motor overload.

WINDING RESISTANCE

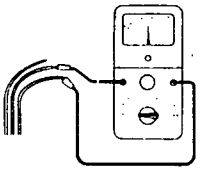

How to Measure

Turn off power and disconnect the drop cable leads in the control box. Using an ohmmeter, set the scale selectors to Rx1 for values under 10 ohms and and Rx10 for values over 10 ohms.

Zero-adjust the meter and measure the resistance between leads. Record the values.

Motor resistance values can be found in the Electrical Data, Table C. Cable resistance values are in Table D.

What it Means

If all the ohm values are normal, and the cable colors correct, the windings are not damaged. If any one ohm value is less than normal, the motor may be shorted. If any one ohm value is greater than normal, there is a poor cable connection or joint. The windings or cable may also be open. If some of the ohm values are greater than normal and some less, the drop cable leads are mixed. To verify lead colors, see resistance values in Electrical Data, Table C.

INSULATION RESISTANCE

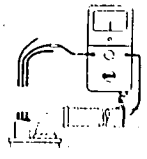

How to Measure

Turn off power and disconnect the drop cable leads in the control box. Using an ohm or mega ohmmeter, set the scale selector to Rx100K and zero-adjust the meter.

Measure the resistance between the lead and ground (discharge pipe or well casing, if steel).

What it Means

For ohm values, refer to table below. Motors of all Hp, voltage, phase and cycle duties have the same value of insulation resistance.

OHM VALUE	MEGAOHM VALUE	CONDITION OF MOTOR AND LEADS
		Motor not yet installed:
2,000,000 (or more)	2.0	New Motor
1,000,000 (or more)	1.0	Used motor which can be reinstalled in the well.
		Motor in well (Ohm readings are for drop cable plus motor):
500,000 - 1,000,000	0.5 - 1.0	A motor in reasonably good condition.
20,000 - 50,000	0.02 - 0.5	A motor which may have been damaged by lightning or with damaged leads. Do not pull the pump for this reason.
10,000 - 20,000	0.01 - 0.02	A motor which definitely has been damaged or with damaged cable. The pump should be pulled and repairs made to the cable or the motor replaced. The motor will still operate, but probably not for long.
less than 10,000	0 - 0.01	A motor which has failed or with completely destroyed cable insulation. The pump must be pulled and the cable repaired or the motor replaced. The motor will not run in this condition.

Troubleshooting Chart

FAULT	POSSIBLE CAUSES	HOW TO CHECK	HOW TO CORRECT
A. Pump Does Not Run	1. No power at pump panel.	Check for voltage at panel.	If no voltage at panel, check feeder panel for tripped circuits.
	2. Fuses are blown or circuit breakers are tripped.	Remove fuses and check for continuity with ohmmeter.	Replace blown fuses or reset circuit breaker. If new fuses blow or circuit breaker trips, the electrical installation and motor must be checked.
	3. Defective controls.	Check all safety and pressure switches for operation. Inspect contact in control devices.	Replace worn or defective parts.
	4. Motor and/or cable are defective.	Turn off power. Disconnect motor leads from control box. Measure the lead to lead resistances with the ohmmeter (Rx1). Measure lead to ground values with ohmmeter (Rx100K). Record measured values.	If open motor winding or ground is found, remove pump and recheck values at the surface. Repair or replace motor or cable.
	5. Defective capacitor.	Turn off the power, then discharge capacitor. Disconnect leads and check with an ohm-meter (Rx100K). When meter is connected, the needle should jump forward and slowly drift back.	If there is no needle movement, replace the capacitor.
B. Pump Runs But Does Not Deliver Water	1. Groundwater level in well is too low or well is collapsed.	Check well drawdown.	Lower pump if possible. If not, throttle discharge valve and install water level control.
	2. Integral pump check valve is blocked.	Install pressure gauge, start pump, gradually close the discharge valve and read pressure at shut-off. After taking reading, open valve to its previous position. Convert PSI to feet (For water: PSI x 2.31 ft/PSI = _____ ft.), and add to this the total vertical distance from the pressure gauge to the water level in the well while the pump is running. Refer to the specific pump curve for the shut-off head for that pump model. If the measured head is close to the curve, pump is probably OK.	If not close to the pump curve, remove pump and inspect discharge section. Remove blockage, repair valve and valve seat if necessary. Check for other damage. Rinse out pump and reinstall.
	3. Inlet strainer is clogged.	Same as B.2 above.	If not close to the pump curve, remove pump and inspect. Clean strainer, inspect integral check valve for blockage, rinse out pump and reinstall.
	4. Pump is damaged.	Same as B.2 above.	If damaged, repair as necessary. Rinse out pump and reinstall.
C. Pump Runs But at Reduced Capacity	1. Drawdown is larger than anticipated.	Check drawdown during pump operation.	Lower pump if possible. If not, throttle discharge valve and install water level control.
	2. Discharge piping or valve leaking.	Examine system for leaks.	Repair leaks.
	3. Pump strainer or check valve are clogged.	Remove pump and inspect.	Clean, repair, rinse out pump and reinstall.
	4. Pump worn.	Same as B.2 above.	If not close to pump curve, remove pump and inspect.

Troubleshooting (continued)

FAULT	POSSIBLE CAUSES	HOW TO CHECK	HOW TO CORRECT
D. Pump Cycles Too Much	**1.** Pressure switch is not properly adjusted or is defective.	Check pressure setting on switch and operation. Check voltage across closed contacts.	Re-adjust switch or replace if defective.
	2. Level control is not properly set or is defective.	Check setting and operation.	Re-adjust setting (refer to manufacturer data). Replace if defective.
	3. Plugged snifter valve or bleed orifice.	Examine valve and orifice for dirt or corrosion.	Clean and/or replace if defective.
E. Fuses Blow or Circuit Breakers Trip	**1.** High or low voltage.	Check voltage at pump panel. If not within ± 10%, check wire size and length of run to pump panel.	If wire size is correct, contact power company. If not, correct and/or replace as necessary.
	2. Control box wiring and components.	Check that control box parts match the parts list. Check to see that wiring matches wiring diagram. Check for loose or broken wires or terminals.	Correct as required.
	3. Defective capacitor.	Turn off power and discharge capacitor. Check using an ohmmeter (Rx100K). When the meter is connected, the needle should jump forward and slowly drift back.	If no meter movement, replace the capacitor.
	4. Starting relay (Franklin single phase motors only).	Check resistance of relay coil with an ohmmeter (Rx1000). Check contacts for wear.	Replace defective relay.

Table A

Minimum Water Flow Requirements for Submersible Pump Motors

MOTOR DIAMETER	CASING OR SLEEVE I.D. IN INCHES	MIN. FLOW PAST THE MOTOR (GPM)
4"	4	1.2
	5	7
	6	13
	7	21
	8	30

NOTES: 1. A flow inducer or sleeve must be used if the water enters the well above the motor or if there is insufficient water flow past the motor.

2. The minimum recommended water velocity over 4" motors is 0.25 feet per second.

Table B

Guide for Engine-Driven Generators in Submersible Pump Applications

	MINIMUM KILOWATT RATING OF GENERATOR FOR THREE-WIRE SUBMERSIBLE PUMP MOTORS	
MOTOR HP	EXTERNALLY REGULATED GENERATOR	INTERNALLY REGULATED GENERATOR
0.33 HP	1.5 KW	1.2 KW
0.50	2.0	1.5
0.75	3.0	2.0
1.0	4.0	2.5
1.5	5.0	3.0

NOTES:

1. Table is based on typical 80°C rise continuous duty generators with 35% maximum voltage dip during start-up of single phase motors.
2. Contact the manufacturer of the generator to assure the unit has adequate capacity to run the submersible motor.
3. If the generator rating is in KVA instead of kilowatts, multiply the above ratings by 1.25 to obtain KVA.

Table C

Electrical Data - 60 Hz Submersible Pump Motors

GRUNDFOS MOTORS

Rated HP	Volts	PH	Service Factor	Rated HP Amps	Service Factor Amps	Circuit Breaker or Standard Fuse	Dual Element Fuse	KVA Code	Locked Rotor Amps	Winding Resistance (Ohms)
4 INCH (Two Wire)										
⅓	230	1	1.75	3.9	4.6	15	6	T	29.0	5.9
½	230	1	1.60	5.3	6.0	15	8	S	35.0	4.1
¾	230	1	1.50	6.4	7.0	20	10	P	42.0	3.5
1	230	1	1.40	7.7	9.3	25	12	M	48.0	2.9
1½	230	1	1.30	10.3	12.4	30	15	L	63.0	2.1

										BY	RY
4 INCH (Three Wire)											
⅓	230	1	1.75	3.9	4.6	15	6	P	19.0	5.9	15.6
½	230	1	1.60	5.3	6.0	15	8	M	24.0	4.1	11.0
¾	230	1	1.50	6.4	7.0	20	10	K	28.0	3.5	8.4
1	230	1	1.40	7.7	9.3	25	12	K	37.0	2.9	8.3
1½	230	1	1.30	9.0	11.0	30	15	J	46.0	2.1	8.7

FRANKLIN MOTORS

Rated HP	Volts	PH	Service Factor	Rated HP Amps	Service Factor Amps	Circuit Breaker or Standard Fuse	Dual Element Fuse	KVA Code	Locked Rotor Amps	Winding Resistance (Ohms)
4 INCH (Two Wire)										
⅓	230	1	1.75	3.5	4.4	15	5	S	24.2	6.0 - 7.4
½	230	1	1.60	4.8	5.9	15	7	R	31.2	4.2 - 5.2
¾	230	1	1.50	6.4	8.0	20	9	N	40.2	2.7 - 3.4
1	230	1	1.40	8.2	9.6	25	12	M	46.0	2.2 - 2.8
1½	230	1	1.30	10.6	13.1	35	15	L	56.8	1.5 - 1.9

										BY	RY
4 INCH (Three Wire)											
⅓	230	1	1.75	3.5	4.4	15	5	N	16.4	6.0 - 7.4	23.4 - 28.6
½	230	1	1.60	4.8	5.9	15	7	M	23.1	4.2 - 5.2	15.5 - 19.6
¾	230	1	1.50	6.4	8.0	20	9	M	33.1	2.7 - 3.4	11.0 - 13.6
1	230	1	1.40	8.0	9.6	25	12	L	42.0	2.2 - 2.8	9.5 - 11.7
1½	230	1	1.30	10.0	11.6	30	15	J	52.8	1.5 - 1.9	6.2 - 8.5

Table D

Total Resistance of Drop Cable (OHMS)

The values shown in this table are for copper conductors. Values are for the total resistance of drop cable from the **Control box to the motor and back.**

To determine the resistance:

1. Disconnect the drop cable leads from the control box.
2. Record the size and length of drop cable.
3. Determine the cable resistance from the table.
4. Add drop cable resistance to motor resistance. Motor resistances can be found in the Electrical Data Chart, Table C.
5. Measure the resistance between each drop cable lead using an ohmmeter. Meter should be set on Rx1 and zero-balanced for this measurement.
6. The measured values should be approximately equal to the calculated values.

Wire Resistances

Distance From Control Box to Pump Motor (FT.)	12 AWG Wire Resistance (OHMS)	14 AWG Wire Resistance (OHMS)
10	0.03	0.05
20	0.06	0.10
30	0.10	0.15
40	0.13	0.21
50	0.16	0.26
60	0.19	0.31
70	0.23	0.36
80	0.26	0.41
90	0.29	0.46
100	0.32	0.51
110	0.36	0.57
120	0.39	0.62
130	0.42	0.67
140	0.45	0.72
150	0.49	0.77
160	0.52	0.82
170	0.55	0.87
180	0.58	0.93
190	0.62	0.98
200	0.65	1.03

Redi-Flo4

LIMITED WARRANTY

Redi-Flo4 Environmental Pumps manufactured by GRUNDFOS Pumps Corporation (GRUNDFOS) are warranted to the original user only to be free of defects in material and workmanship for a period of 18 months from date of installation, but not more than 24 months from date of manufacture. GRUNDFOS' liability under this warranty shall be limited to repairing or replacing at GRUNDFOS' option, without charge, F.O.B. GRUNDFOS' factory or authorized service station, any product of GRUNDFOS manufacture. GRUNDFOS will not be liable for any costs of removal, installation, transportation, or any other charges which may arise in connection with a warranty claim. Products which are sold but not manufactured by GRUNDFOS are subject to the warranty provided by the manufacturer of said products and not by GRUNDFOS' warranty. GRUNDFOS will not be liable for damage or wear to products caused by abnormal operating conditions, accident, abuse, misuse, unauthorized alteration or repair, or if the product was not installed in accordance with GRUNDFOS' printed installation and operating instructions.

To obtain service under this warranty, the defective product must be returned to the distributor or dealer of GRUNDFOS products from which it was purchased together with proof of purchase and installation date, failure date, and supporting installation data. Unless otherwise provided, the distributor or dealer will contact GRUNDFOS or an authorized service station for instructions. Any defective product to be returned to GRUNDFOS or a service station must be sent freight prepaid; documentation supporting the warranty claim and/or a Return Material Authorization must be included if so instructed.

GRUNDFOS WILL NOT BE LIABLE FOR ANY INCIDENTAL OR CONSEQUENTIAL DAMAGES, LOSSES, OR EXPENSES ARISING FROM INSTALLATION, USE OR ANY OTHER CAUSES. THERE ARE NO EXPRESS OR IMPLIED WARRANTIES, INCLUDING MERCHANTABILITY OR FITNESS FOR A PARTICULAR PURPOSE, WHICH EXTEND BEYOND THOSE WARRANTIES DESCRIBED OR REFERRED TO ABOVE.

Some jurisdictions do not allow the exclusion or limitation of incidental or consequential damages and some jurisdictions do not allow limitations on how long implied warranties may last. Therefore, the above limitations or exclusions may not apply to you. This warranty gives you specific legal rights and you may also have other rights which vary from jurisdiction to jurisdiction.

GRUNDFOS®

GRUNDFOS Pumps Corp. • 2555 Clovis Ave. • Clovis, CA 93612
Support Centers: Allentown, PA • Atlanta, GA • Mississauga, Ontario, Canada

L-RF-IO-001	4/1/91
PRINTED IN USA	

Form SPAD-187
July, 1987

CLASS HOC
Model 2

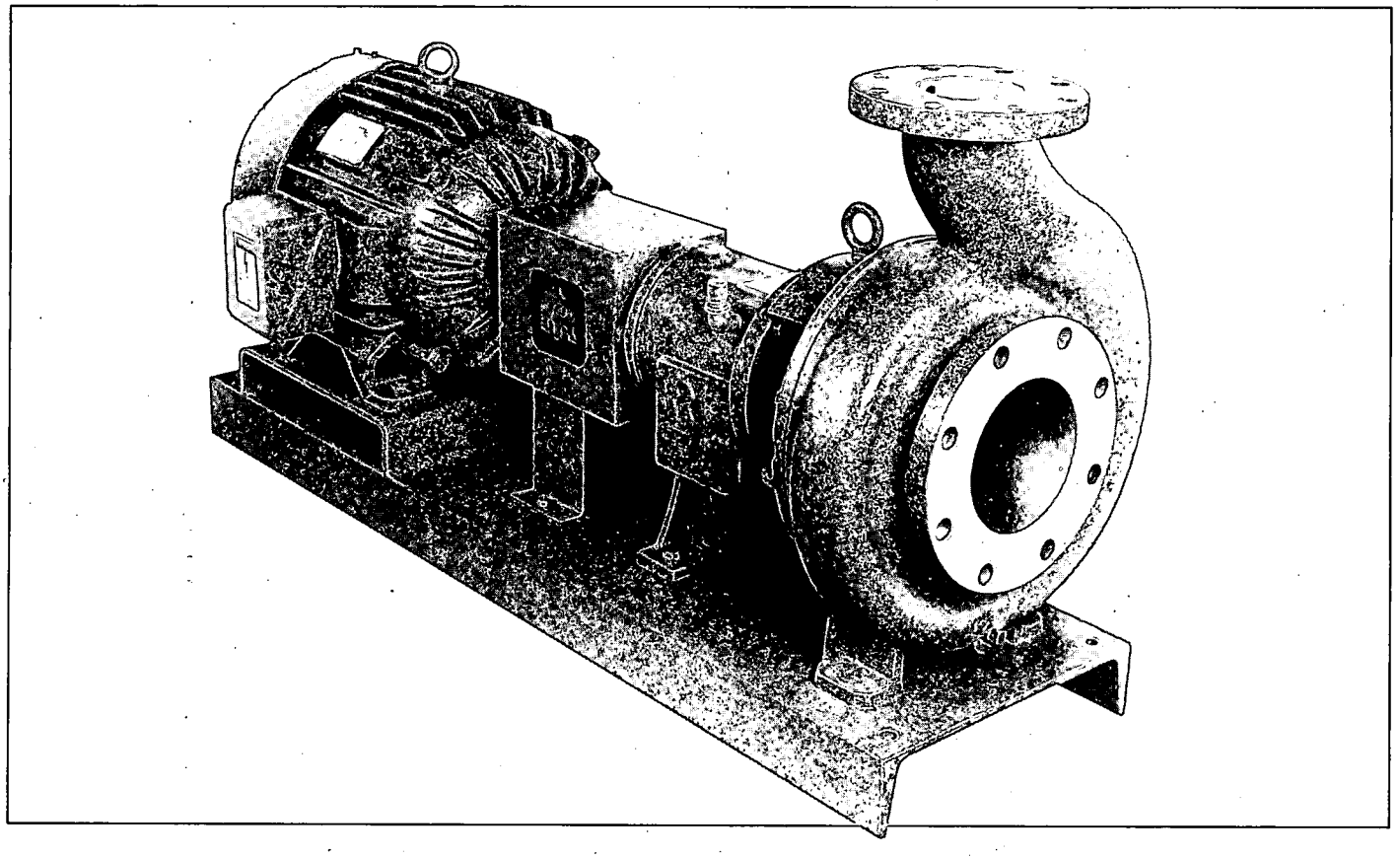

Cradle Mounted Centrifugal Pumps

Instructions for
INSTALLATION-OPERATION & MAINTENANCE

Note: It is important that the entire contents of this booklet be studied before installation.

Refer all communications to the nearest branch office listed on the back cover.

INGERSOLL-RAND®
PUMPS

Table of Contents

I. Introduction 3
- Safety-General 3
- Safety Procedures 3
- Check upon Arrival 3
- Handling 3
- Storage and Preservation 3
- Pump Groupings 3

II. Installation 4
- Checklist 4
- Cleaning the Pump 4
- Location 4
- Foundation 4
- Field Mounting of Driver 4
- Leveling 4
- Grouting 5
- Piping 5
- Nozzle Loading 6
- Preliminary Alignment 6
- Check Rotation 7
- Coupling and Guard 7
- Stuffing Box 7
- Auxiliary Piping 8

III. Pre-Starting Checks and Operation 9
- Checklist 9
- Lubrication 9
- Impeller Running Clearance 10
- On-The-Bench Setting of Impeller Running Clearance 10
- Starting the Pump 11
- Operating Checks 11
- Throttling the Pump 12
- Stopping the Pump 12
- Trouble Chart 12-13
- Technical Data 13

IV. Maintenance 14
- Preventive Maintenance 14
- Replacing Packing 14
- Replacement of Mechanical Seals 14
- Seal Types and Settings 14
- Bearing Lubrication 15
- Overhaul Instructions 15
- Disassembly 15
- Cleaning and Inspection 15
- Pump Reassembly 16

V. Ordering Instructions 18
- How to Order Replacement Parts 18
- How to Select Recommended Spares 18

VI. Pump Data 18
- Major Parts Interchangeability 18
- HOC Engineering Information 19
- Cross-Section, Group I 20
- Cross-Section, 1½ x 1 x 8 21
- Cross-Section, Group 2 22
- Cross-Section, 6 x 4 x 13 23
- Cross-Section, Group 3 24
- Exploded Parts Drawing, Group 1 25
- Exploded Parts Drawing, Group 2 26
- Exploded Parts Drawing, Group 3 27
- Recommended Spare Parts List 28

I. Introduction

This manual contains instructions for the installation, operation and maintenance of your Ingersoll-Rand Class HOC2 centrifugal pump. This information is provided to insure the long life and safe operation of this pump, therefore,read this manual before installation or operation and keep it in a safe place for future reference. The instructions in this manual are intended for personnel with a general training in the operations and maintenance of centrifugal pumps.

A. Safety-General

This pump has been designed to provide safe and reliable service. However, it is both a pressure vessel and a piece of rotating machinery. Therefore, the operator(s) must exercise good judgment and proper safety practices to avoid damage to the equipment, surrounding areas, and to prevent personal injury. It must be understood that the information contained in this manual does not relieve operating and maintenance personnel of the responsibility of exercising normal good judgment in operation and care of this pump and its components. The safety department at this pump location must establish a safety program based on a thorough analysis of industrial hazards. This program should be reviewed before the installation and operation of this pump.

In addition to the hazards of rotating equipment and pressure vessels, considerations must be given to hazards of electrical power, hot oil, high pressure and temperature liquids, toxic liquids and gases, and flammable liquids and gases. Proper installation and care of protective guards, shutdown devices and over-pressure protection equipment should also be an essential part of any safety program.

Also essential are special precautionary measures to prevent the possibility of applying power to the equipment at any time that maintenance work is in process. In addition, the prevention of rotation due to reverse flow should not be overlooked.

In general, all personnel should be guided by all the basic rules of safety associated with the equipment and the process.

B. Safety Procedures

In this manual the words **WARNING, CAUTION,** and **NOTE** will be found. The definitions of these words are as follows:

WARNING:—An operating procedure, practice, etc. which, if not correctly followed, could result in personal injury or loss of life.

CAUTION:—An operating procedure, practice, etc. which, if not strictly observed, could result in damage to, or destruction of equipment.

NOTE:—An operating procedure, condition, etc. which is essential to highlight.

Ingersoll-Rand will not be liable for any delay, damage or injury caused by the failure to comply with the procedures in this manual. This pump must not be operated at pressures, temperatures or speeds higher than stated on the original order, or used with liquids not previously approved without written permission of Ingersoll-Rand.

C. Check Upon Arrival

The complete pump unit should be inspected immediately upon arrival, and any irregularities arising due to shipment reported to the carrier.

Care must be taken during unpacking to avoid damage to the equipment. A copy of this instruction manual and instructions for various other components will be included in the shipment.

Inspect all packaging to avoid discarding these instructions and other pump parts and accessories which may be packed inside shipping containers or attached to skids in individual packages.

D. Handling

Use care when moving pumps. **DO NOT lift pumps or pumping units by eyebolts (when provided).** The pump eyebolt is designed only for removing the back pull-out assembly and the motor eyebolt only for moving the motor. An assembled pump should be lifted using a sling under the suction nozzle and the bearing housing. Complete pump, driver and motor units should be hoisted using slings beneath the bedplate under both the pump and driver. Make certain that the equipment used to lift the pump or pumping unit is capable of supporting the weights encountered.

E. Storage and Preservation

The standard domestic shipping and preservation protection is suitable for the period of shipment (in covered trucks) and installation.

The equipment is also protected for a short period of covered storage at the jobsite before installation. If the pump is not to be installed at once, special precautions must be taken. One method is to apply special protection before shipment, but this additional packaging must then be removed before installation. Therefore application of special protection in the field is suggested. As a minimum the pump must be stored in a dry, clean place. The unit should be stored in an approximately level position with no strains applied. Flange covers should be left in place. It is recommended to flush the pump and bearing housing with a suitable rust preventative. Contact your local Ingersoll-Rand respresentative for any additional recommendations. The individual manufacturers of other components should be contacted for their recommendations for long term storage.

F. Pump Groupings

Class HOC2 pumps are grouped according to seal size and bearing systems. Reference is made throughout this manual to Group I,2, or 3 pumps. Listed below are the pumps belonging to each group.

Group I Pumps	Group 2 Pumps		Group 3 Pumps
1½x1x6 HOC	3x2x6 HOC	3x2x10 HOC	8x6x13 HOC
3x1½x6 HOC	3x1½x8 HOC	4x3x10 HOC	10x8x13 HOC
1½x1x8 HOC	3x2x8 HOC	4x3x10L HOC	8x6x15 HOC
	4x3x8 HOC	6x4x10 HOC	10x8x15 HOC
	4x3x8L HOC	3x1½x13 HOC	
	2x1x10 HOC	3x2x13 HOC	
	3x1½x10 HOC	4x3x13 HOC	
		6x4x13 HOC	

II. INSTALLATION

NOTE: The design of piping systems, foundations and other areas of system design is the responsibility of others. Ingersoll-Rand data and comments are offered as an aid, but Ingersoll-Rand cannot assume responsibility for the design and operation.

It is recommended that the customer consult a specialist skilled in the design of foundations, piping, sumps and related systems so as to supplement and interpret Ingersoll-Rand Company information and ensure a successful installation.

A. Checklist

1. Cleaning the pump
2. Location
3. Foundation
4. Field Mounting of Driver
5. Leveling
6. Grouting
7. Piping
8. Preliminary Alignment
9. Check Rotation
10. Coupling and Guard
11. Stuffing Box
12. Auxiliary Piping

B. Cleaning the Pump

Before putting the pump into operation, the liquid end of the pump should be flushed out with water to remove any rust preventative as well as any foreign matter which may have accumulated during shipment, storage, or installation.

If the pump has been in storage for more than six months, it should be disassembled, inspected and cleaned, as required, before putting it into service.

C. Location

Install the pump in an accessible place, as close as possible to the source of the liquid to be pumped. Allow space for inspection and maintenance, and sufficient floor space and head room for the required crane or hoist service.

Consideration must be given to the environment when pumps are driven by an electric motor. Proper ventilation is necessary, and extremes of dampness and/or heat should be avoided.

D. Foundation

The foundation should be sufficiently rigid and substantial enough to absorb any pump vibration and to permanently support the entire pumping unit. Bedplate mounted pumps are normally grouted in on a reinforced concrete foundation which is strong enough to support 1½ times the weight of the unit (including driver). The foundation bolts should be installed in a fashion similar to that shown in Figure I at the locations and size shown on the certified General Arrangement Drawing, but it suggested that the foundation bolts not be set rigidly until the equipment arrives.

For optional stilt-mounted or spring-loaded baseplates the installation should be in accordance with the General Arrangement Drawing.

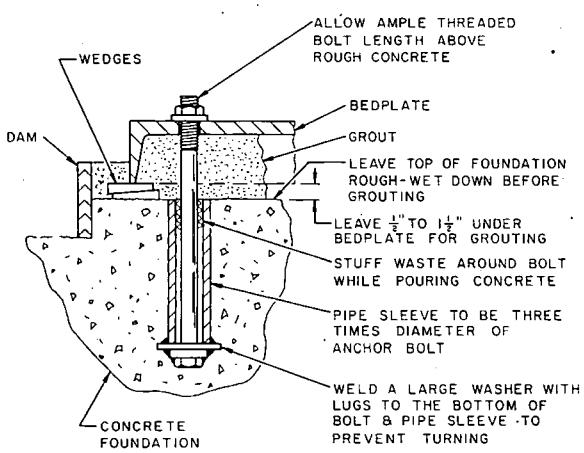

Figure 1

E. Field Mounting of Drivers

Important: Check driver shaft run-out.

During the assembly of the pump at the factory the run-out of the rotating parts is checked.

Before the pump and driver are aligned as a unit the driver coupling run-out must be checked. Broken shafts sometimes result because of the failure in the field to check the driver shaft run-out.

NOTE: On units supplied from the factory less driver, but with metallic bedplate, it is required that the driver support be welded in place,in the field, once proper shaft spacing is obtained.

F. Leveling

1. Check that the pump shaft is centered from side to side with the bedplate and tighten the pump hold down bolts.

2. Place the unit on the foundation and level the baseplate by driving wedges, or shimming, at at least four points, two under the pump and two under the driver (Figure 2). Use a machinist's level on the discharge nozzle and plumb the suction nozzle to determine levelness. The bedplate should be between .50" (12mm) and 1.50" (38mm) above the foundation.

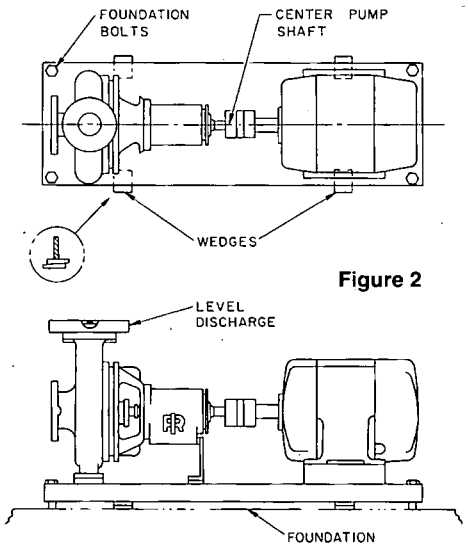

Figure 2

3. Tighten the foundation bolts so that they are snug and recheck levelness. Adjust wedges if necessary to maintain flatness.

4. Check to be sure the baseplate is not distorted and that accurate coupling alignment can be acheived within the limits of movement and/or by shimming the driver.

G. Grouting

NOTE: Do not grout until the unit has been properly leveled.

Build a dam around the bedplate and pour the grout through the ends, on channel bedplates, or through the grout holes on steel and non-metallic bedplates. It is essential that the area under the bedplate be completely grouted with no voids or air pockets. After the grout has hardened (48 to 72 hours), remove the dam and also the wedges, if desired. The holes left by the wedges may be filled with grout.

H. Piping

After the unit has been mounted, connect the suction and discharge piping. Proper piping design is critical to the proper operation and long life of any pump. Do not use the pump as a piping support. All piping should be supported independently of the pump, and care should be taken when making up fittings, etc. to avoid placing a strain on the pump. Reference to the guidelines in the "HYDRAULIC INSTITUTE STANDARDS" should be made before designing or installing piping. Both the suction and discharge piping should be as short and as straight as possible in order to reduce friction losses. Straight length of pipe at least five to ten diameters long should be attached to the pump suction and discharge before any elbows are used.

Refer to the nozzle loading chart (page 6) for maximum allowable nozzle loads.

CAUTION: Provision must be made to support suction and discharge piping to the pump to prevent excessive nozzle loads and maintain pump-driver alignment.

CAUTION: Never strain the pump by using force to draw piping to the pump flanges.

Suction Piping

1. Only clear, cold liquids can be pumped with a suction lift.

2. Arrange the length and size of suction pipe so that the maximum suction lift, including all losses, will not exceed the NPSH requirements of the pump. (See page 13.)

3. Hot liquids must flow to the pump under sufficient positive head to prevent vaporization at the impeller inlet.

4. Keep the suction pipe short and direct.

5. Use a suction pipe at least one size larger than the pump suction nozzle.

6. Keep the suction pipe free of air pockets.

a. When the pump operates with a suction lift, the suction pipe should slope upward to the pump nozzle from the source of supply.

b. Horizontal suction pipes should have a gradual rise. Do not install any part or section of a horizontal suction pipe higher than the pump suction nozzle.

c. Whenever another pipe or other obstruction requires bending from the natural slope, run the suction pipe under the obstruction rather than above it.

d. The pipe reducer at the pump suction nozzle must be of the eccentric type to prevent air pockets in the suction line.

e. Gate valves should never be necessary in a suction pipe under suction lift; however, when they are used, air pockets can be eliminated by turning the valve stem in a horizontal or bottom direction. When used, their size should be equal to that of the largest pipe used in the suction line.

7. Horizontal elbows in the suction line should be at a lower elevation than the pump nozzle. Never install a horizontal elbow next to the pump. Where possible have a vertical elbow lead into the pipe reducer next to the pump.

Discharge Piping

Use discharge piping one size larger than the pump discharge nozzle. It is good practice to install a gate valve and a check valve in the discharge line. The installation of the check valve prevents back flow which may damage the pump on shut down. (Ingersoll-Rand will not be responsible for damages resulting from failure to install a check valve.)

NOTE: If quick-closing valves are installed in the discharge piping system, protection MUST be provided to ensure that no surge or water-hammer is transmitted to the pump.

Suction Screen (Strainer)

When starting precision units of this type it is particularly important to protect the running fits from abrasive matter present in new piping.

A screen should be placed in the suction line as close to the suction nozzle as possible. The strainer must have a net area at least three times the area of the suction pipe.

A differential gauge can be used to monitor the strainer and allow the pump to be shut down before the debris blocks the strainer such that the pump is damaged. At this point the strainer should be cleaned and reinstalled, when the scale and dirt have been removed from the system as shown by no further changes in pressure or pressure drops across the screen the strainer may be removed.

The strainer should be used for at least 24 hours under normal temperature conditions before removal.

Pump Nozzle Loading
(For Fully-Grouted Metallic Bedplates Only)

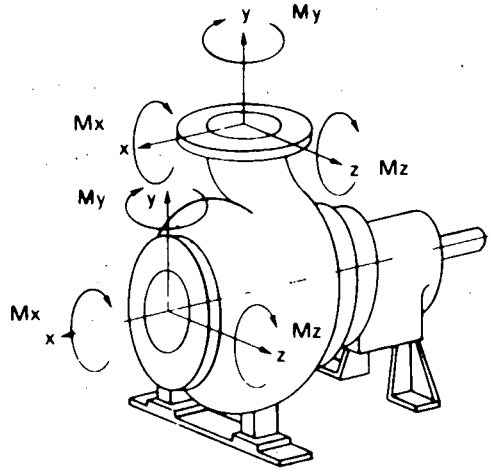

Values given are for forces or moments acting alone at the suction or discharge flange. In combination forces and moments must be reduced so that:

$$\frac{Fxd}{Fxd_{max}} + \frac{Fyd}{Fyd_{max}} + \frac{Fzd}{Fzd_{max}} + \frac{Mxd}{Mxd_{max}} + \frac{Myd}{Myd_{max}} + \frac{Mzd}{Mzd_{max}} +$$

$$\frac{Fxs}{Fxs_{max}} + \frac{Fys}{Fys_{max}} + \frac{Fzs}{Fzs_{max}} + \frac{Mxs}{Mxs_{max}} + \frac{Mys}{Mys_{max}} + \frac{Mzs}{Mzs_{max}} \leq 1.0$$

PUMP		Forces-Lbs.			Moments-Ft. Lbs.		
		Fx	Fy	Fz	Mx	My	Mz
1½ x 1 x 6	Suction	810	500	500	380	690	690
	Disch.	100	300	180	320	400	320
3 x 1½ x 6	Suction	870	520	520	380	690	790
	Disch.	120	400	220	340	420	350
3 x 2 x 6	Suction	740	450	680	610	730	730
	Disch.	250	800	400	380	460	380
1½ x 1 x 8	Suction	810	510	500	380	730	720
	Disch.	90	300	180	330	400	330
3 x 1½ x 8	Suction	890	560	550	950	700	790
	Disch.	180	600	400	500	440	360
3 x 2 x 8	Suction	1000	580	620	610	1000	1000
	Disch.	330	700	350	620	730	610
4 x 3 x 8	Suction	880	530	800	700	880	890
4 x 3 x 8L	Disch.	310	870	500	700	880	730
2 x 1 x 10	Suction	1000	730	730	610	1200	1200
	Disch.	530	850	530	610	160	1000
3 x 1½ x 10	Suction	930	580	570	650	1090	1080
	Disch.	380	610	400	500	780	640
3 x 2 x 10	Suction	900	560	580	700	1040	1040
	Disch.	370	640	400	600	800	660
4 x 3 x 10	Suction	900	570	800	800	910	910
4 x 3 x 10L	Disch.	310	820	500	700	890	730
6 x 4 x 10	Suction	700	600	800	800	930	920
	Disch.	370	900	500	700	900	750
3 x 1½ x 13	Suction	820	520	510	650	920	910
	Disch.	340	540	400	500	800	660
3 x 2 x 13	Suction	950	600	600	700	1180	640
	Disch.	400	820	400	600	1330	680
4 x 3 x 13	Suction	970	600	700	650	1180	700
	Disch.	400	820	500	650	1470	800
6 x 4 x 13	Suction	1210	770	770	910	1180	1570
	Disch.	320	900	500	930	1130	930
8 x 6 x 13	Suction	1170	2510	2500	2410	1250	1250
	Disch.	810	1310	810	2410	1250	2500
10 x 8 x 13	Suction	1170	2420	2410	2410	1250	1500
	Disch.	970	1560	970	2410	1250	3000
8 x 6 x 15	Suction	1170	2380	2370	2410	1250	1500
	Disch.	540	870	530	2410	1250	3000
10 x 8 x 15	Suction	1170	2110	2100	2410	1250	1600
	Disch.	780	1260	780	2410	1250	3250

I. Preliminary Alignment

Correct alignment of the pump and driver is of the utmost importance. Pump-Driver combinations are aligned at the factory, but bedplates may be distorted in shipment, and misalignment may occur due to unequal tightening of foundation bolts or pipe strain. It is therefore essential that alignment be checked, as listed below, before the pump is put in service.

1. Check that the pump shaft is level and parallel to the bedplate. Use the cradle foot adjustment screw(s) and/or shims as necessary.
2. Check that the foundation and pump hold-down bolts are tight.
3. Connect the suction and discharge piping as described in Section II.H PIPING.
4. Check for binding by rotating the pump by hand.
5. With most couplings it is more convenient to check alignment with the hubs installed on the shaft, therefore install the hubs.
6. Check OFFSET alignment by laying a straight edge across the coupling halves at 90 degree intervals and measure misalignment with a feeler gage. For the prestartup alignment the vertical offset alignment must be adjusted to allow for the expansion due to temperature of the pump and driver:

Vertical Cold Alignment Settings

Pumped Fluid Temp.	Set Driver Shaft
Up to 200 deg F	.005" (.12mm) below pump shaft
200 to 250 deg F	equal to pump shaft
Above 250 deg F	.005" (.12mm) above pump shaft

CAUTION: Do not adjust the pump or bearing housing foot to obtain alignment.

Move the Driver from side to side or remove shims from under the DRIVER FEET until the OFFSET alignment is within .002" (.05mm) TIR of the recommended vertical cold alignment and .002" (.05mm) TIR side to side as shown in Figure 3. Maintain the correct distance between shafts.

7. Check ANGULAR misalignment using an inside micrometer, feeler gage or calipers and measure the coupling separation at 90 degree intervals on the outer diameter of the faces on the coupling hubs. Move the Driver and shim as necessary until ANGULAR alignment is within .002" (.05mm) TIR as shown in Figure 4.

8. Recheck OFFSET alignment. Continue to move the DRIVER and adjust the DRIVER SHIMS until both OFFSET and ANGULAR alignment are within the above limits.

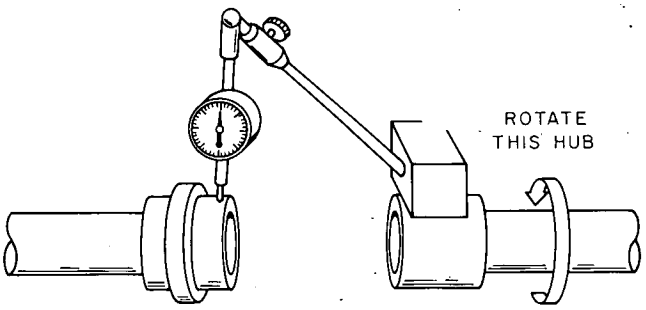

Figure 3

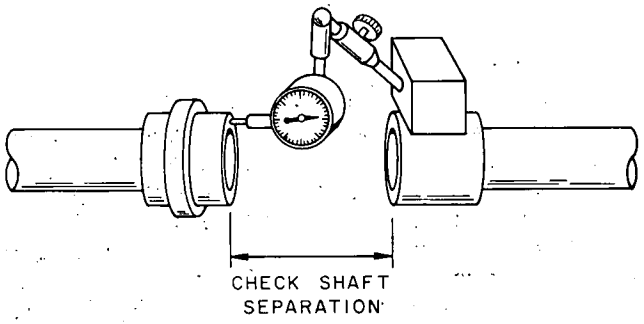

Figure 4

J. Check Rotation

CAUTION: Check driver rotation. Serious damage to the pump can result if it is rotated in the wrong direction. The correct rotation is cast in the pump casing.

K. Coupling and Guard

1. Connect the coupling per the manufacturer's instructions.
2. Install the coupling guard.

WARNING: This pump must not be operated unless an approved coupling guard is in place. Failure to observe this warning could result in personal injury to operating personnel.

L. Stuffing Box

Packing

If packing is used, it should in general be the softest that can be employed in the service in which the pump is operating. Ingersoll-Rand supplies standard packing as follows:

TFE IMPREGNATED SYNTHETIC FIBERS—For Acids, Caustic, General Petroleum, Water, and General Service.

TEFLON—For liquids which must not be contaminated.

Under normal service conditions, the stuffing box taps are plugged and the packing lubricated by leakage of the liquid through the packing.

If severe conditions necessitate, the packing may be lubricated by clear liquid, or grease injected into the stuffing box.

A special smothering gland may be substituted for the conventional gland for quenching leakage of toxic vapors or steam through a packed box. This gland must be connected to a source of quenching liquid, usually clear water, at low pressure and low flow.

Pumps using packing must be packed before the unit is put into service. A complete set of packing cut to proper lengths is included with other loose parts in the shipping crate. Packing is to be installed in the following manner.

Soft Packing

1. Remove the gland and thoroughly clean the stuffing box and shaft.
2. Insert two rings into the stuffing box by twisting the rings sideways, placing them over the shaft and pushing them firmly into the bottom of the box and stagger the joints 90 degrees on succeeding rings. Insert the seal cage and make certain it falls in relative alignment with the lubricating hole in the stuffing box. Insert remaining rings of packing to fill the stuffing box.
3. After the last ring is in place, replace the gland, and draw up the nuts evenly until snug; then back off the nuts and tighten them again with the fingers only. This will permit the slight amount of leakage necessary to properly lubricate the packing.

NOTE: Packing glands must never be tightened to the point where leakage from the packing is stopped. A small amount of leakage is required for lubrication of the packing. Shutting off leakage flow from the packing will result in burned packing and scored shaft sleeves.

Metallic Packing

1. Remove the gland and thoroughly clean the stuffing box and shaft.
2. Dip each ring in heavy cylinder oil and insert two rings ahead of the seal cage. Lightly caulk each ring and stagger the joints of succeeding rings. Insert the seal cage and make certain it falls in relative alignment with the lubricating hole in the stuffing box. Insert remaining rings of packing after the seal cage, as necessary, to fill the stuffing box. Pack the box in accordance with Figure 5.
3. After the last ring of packing is installed, replace the gland and draw up the nuts evenly and snug.

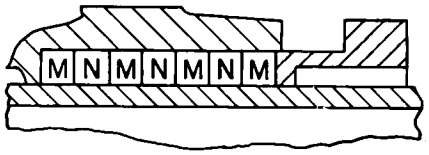

PACKED SOLID

PUMPS WITH
ODD NUMBER OF RINGS

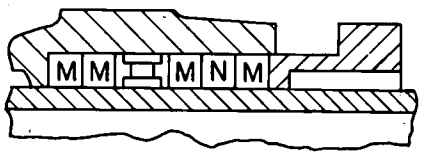

WITH SEAL CAGE

PUMPS WITH
ODD NUMBER OF RINGS

① FIRST AND LAST RINGS ARE ALWAYS M
② M = METALLIC PACKING
N = NON-ASBESTOS PACKING

Figure 5

N TE: Only clean cool pumpage should be injected into the seal cage. If the pumpage is dirty or hot an external source must be utilized, unless the bypass is equipped with proper separator, filter, and/or cooling system, which must be piped into the stuffing box connection.

Mechanical Seals

On pumps supplied with mechanical seals a variety of manufactures types and styles are available for the different types of service and application. When mechanical seals are supplied they have been installed and adjusted before the pump was shipped.

Single Seals

All seals must not be run dry or in abrasives. A variety of seal piping plans designed to suit certain pumping conditions and liquids are available, refer to the General Arrangement Drawing for details on any required connections that need to be made before operation of the pump.

Double Seals

All double seals require external lubrication under all conditions. In all cases, make certain the temperature of the liquid injection into the seal gland does not exceed 115 degrees F and that its pressure is 15 to 20 PSI greater than the stuffing box pressure. Refer to stuffing box pressure chart, Figure 6, for exact values. Injection liquid should be free of dissolved solids.

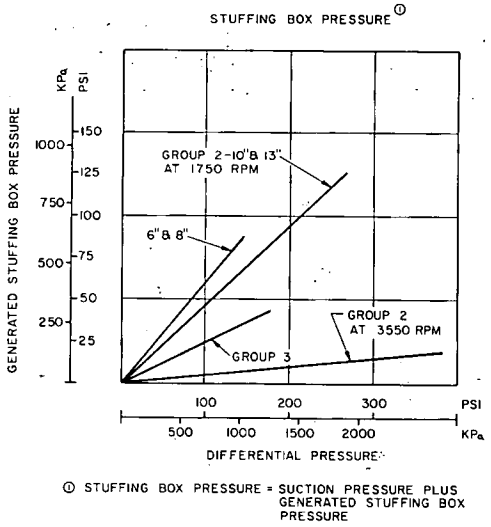

Figure 6

Stuffing Box Cooling

The seal chamber should be cooled when pumpage temperatures exceed mechanical seal temperature limits. A cooled jacketed stuffing box with plan 11 seal flushing will reduce seal chamber temperature approximately 100 degrees F. The cooling jacket with a dead ended seal chamber (no flush into the seal) will reduce the temperatures as shown on Figure 7. To provide greater cooling (150 degrees F) with a continual flush a separate flush line and heat exchanger should be used. The cooling jacket should be used in conjunction with all cooling systems. Refer to the General Arrangement Drawing for size and location of required connections.

NOTE: Cooling jacket must be vented when not in use.

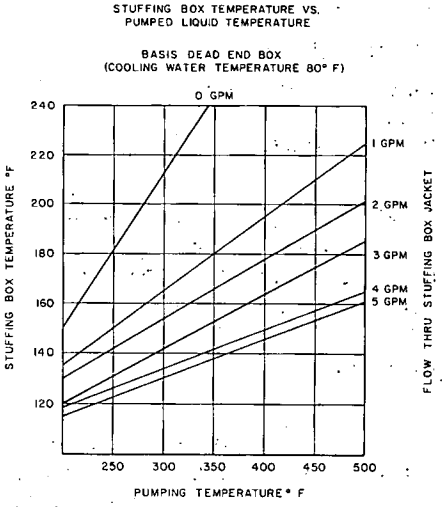

Figure 7

M. Auxiliary Piping

Depending upon the service in which the pump is used, it may be necessary to make lubricating and/or cooling, heating or smothering liquid line connections to the pump. Refer to the General Arrangement Drawing for orientation of auxiliary connections.

III. Pre-Starting Checks and Op ration

A. Checklist

1. LUBRICATION:
   DRIVER
   PUMP
2. IMPELLER RUNNING CLEARANCE
3. ON-THE-BENCH IMPELLER SETTING
4. STARTING THE PUMP
5. OPERATING CHECKS
6. TROUBLE CHART
7. TECHNICAL DATA:
   THROTTLING-MINIMUM FLOW
   NET POSITIVE SUCTION HEAD (NPSH)
   PARALLEL OPERATION
   CHANGING PUMP SPEED
   EFFECTS OF VISCOSITY
   EFFECTS OF SPECIFIC GRAVITY

B. Lubrication

Driver

Prepare the driver for operation as instructed by the driver manufacturer. After wiring, make certain the direction of shaft rotation corresponds to that indicated by the directional arrow on the pump casing. This must be done with coupling disconnected.

WARNING: The driver rotation must be checked before making up coupling. Actual damage to the equipment and personal injury could result from operating the unit with wrong rotation.

When the pump is motor-driven see that the voltage and frequency on the motor and control nameplate correspond with the line voltage. Check all connections to the motor and control with the wiring diagram.

All ball bearing motors that have grease fittings and plugs near the bearing are to be lubricated in accordance with motor manufacturer lubrication instructions.

Pump

When oil lubricated bearings are furnished, the pumps are shipped with the bearing housings empty of oil.

A good quality mineral oil which is non-detergent, and has anti-rust and anti-oxidant additives should be used to fill the bearing housing. The grade of oil should be ISO VG100 (between SAE grade 30 and 40). Typical good oils include Gulf Harmony 100 and Mobil DTE Heavy.

The pump is fitted with a constant-level oiler so that the oil will be maintained at the proper level. For the correct oil level to be maintained, the oiler must be locked at the elevation corresponding to the oil level mark on the bearing housing. A vent is furnished for venting the housing. The oil capacity of the bearing housing needed to give the correct oil elevation is given in Table 1.

Remove transparent oil reservoir from the oiler. Remove the vent cap, fill the bearing housing through the vent connection until the oil level in the oiler cup reaches the middle of the oil level bar on the bearing housing. Fill the transparent oil reservoir and install. Slowly raise the reservoir, locking it in place when the first air bubble enters.

Refer to figure 8.

WARNING: Operation of the unit without proper lubrication can result in overheating of the bearings, bearing failures, pump seizures, and actual breakup of the equipment exposing operating personnel to personal injury.

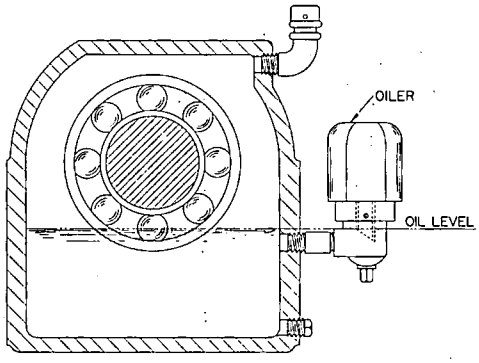

OILER SETTING

Figure 8

Oil is always subject to gradual deterioration from use and contamination from dirt and moisture. In time, the accumulated sludge will be harmful to the bearing and cause premature wear. For this reason, draining and flushing are necessary at regular intervals. Refer to instructions under "MAINTENANCE" section of this book.

Oil Mist Lubrication

There are two methods of oil mist lubrication:

One method is called Pure Mist (Dry Sump). In this method the bearing housing is empty of oil. The oil mist is introduced into optional connections provided when specified outboard of the bearings and allowed to pass thru the bearings and out the bearing housing drain, which must be kept open. Provisions must be made to remove the oil which accumulates at the drain from the oil mist. Refer to figure 9.

The other method is a Purge Mist (Wet Sump) system.

In this method the bearing housing is filled with oil as in normal lubricated construction (complete with constant level oiler). Oil Mist is introduced into the bearing housing thru the vent connection to provide an oil mist environment for the exposed bearing surfaces.

Due to the contact lip seals used at the ends of the bearing housing additional piping and bearing housing modifications are required and it is suggested to consult with others (such as Alemite) before installing or operating a Purge Mist (Wet Sump) system.

With both methods it is suggested to fill the bearing housing with oil to the top and drain just before operation and to run the oil mist system for several hours before starting the pump. This soaks the bearing housing with oil which reduces the amount of time required to establish oil mist equilibrium in the bearing housing which is required for proper operation.

Table 1
APPROXIMATE OIL CAPACITIES

Group 1 Pumps	Group 2 Pumps	Group 3 Pumps
1.0 Pints	3.0 Pints	7.0 Pints

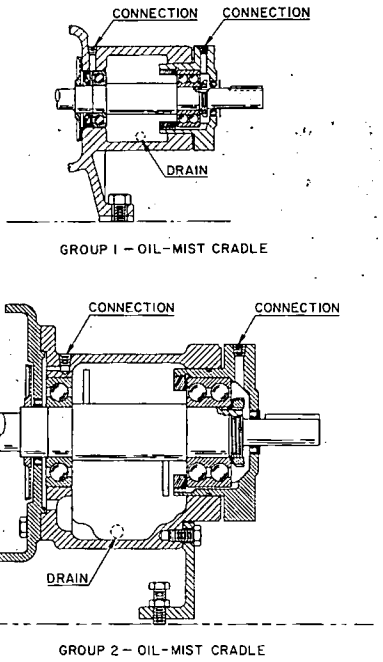

Figure 9

Std. Grease Lubricated Bearings

When standard grease lubricated bearings are furnished, the radial bearing (Part 27A19) is a double shielded, factory-packed grease bearing, and needs no attention for the life of the bearing. The thrust bearing (Part 25A19) is of re-greasable design. The bearing is greased at the factory, but it is suggested to re-grease the bearing before starting the unit so as to insure proper lubrication. Refer to grease lubrication instructions on page 15 and Figure 10 below.

A moisture-resistant, lithium-base grease of number 2 consistency should be used. Typical good greases include: Texaco Premium RB, Chevron SRI #2, and Esso Ronex MP.

Greased-For-Life Bearings

When greased-for-life bearing construction is furnished, there will be no lubrication fittings furnished on the pumps. No further attention needs to be paid to the bearings.

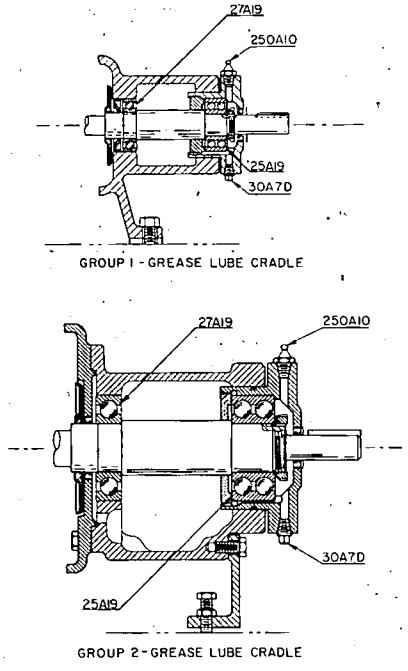

Figure 10

C. Impeller Running Clearance

> **NOTE:** Numbers in parentheses are illustration numbers which correspond to the appropriate cross-section drawing or exploded-view drawing in section VI.

To set running clearances between the impeller and casing, follow this procedure:

(A) Loosen jam nuts (23A4) and capscrews (36A2) on the bearing end cover (0573).

(B) Move the bearing end cover and shaft assembly forward by tightening (sequentially) the bolts (35A2B) in the bearing end cover until the impeller contacts the casing. (By rotating the shaft every so often while tightening the bolts, it can be determined when the impeller contacts the casing.)

(C) Tighten (by hand) the capscrews (36A2) until they rest snugly against the face of the bearing housing. (Do not force).

(D) Loosen the bolts (35A2B) one full turn each.

(E) Tighten each of the capscrews (36A2) 2 flats for Group 1 and Group 2 pumps, or 3 flats for Group 3 pumps.

(F) Tighten the jam nuts (23A4) against the bearing end cover.

(G) Tighten the bolts (35A2B).

(H) Rotate shaft by hand thru at least one complete revolution to make sure there are no rubs or binds. With feeler gages, check to make sure that the gap between the bearing end cover and the face of the bearing housing is equal all around within .003".

> **NOTE:** An addition procedure should be followed to ascertain that the proper impeller running clearance is obtained.

After step (C), measure (with feeler gage) the gap between the bearing end cover and the face of the bearing housing. To this measurement, add .014" for Group 1 pumps, .016" for Group 2 pumps, and .024" for Group 3 pumps. This should equal the gap measured after step (E).

The optimum impeller running clearance for Group 1 and 2 pumps is .010" to .012", and .020" to .023" for Group 3 pumps. Since the rotor could have up to .002" axial end play the settings listed above will result in running clearance within optimum.

D. On-The-Bench Setting of Impeller Running Clearances

Depending on user preference it is sometimes desired to "pre-set" the impeller-to-casing running clearance while the pump rotor is in the shop being worked on. This allows the mechanical seals to be properly positioned and set in the shop, so no field adjustments have to be made. The assembled, pre-adjusted cradle assembly may then be taken to the pump site and installed in the casing which has been left in the line.

This procedure will result in pre-set impeller clearances within .010" of optimum. This will not affect mechanical seal settings when final, field setting of impeller clearance is done.

The following table gives the dimension from the bare gasket surface of the stuffing box cover to the face of the impeller. This procedure does not apply to the Group 2 6x4x13 pump and all Group 3 pumps.

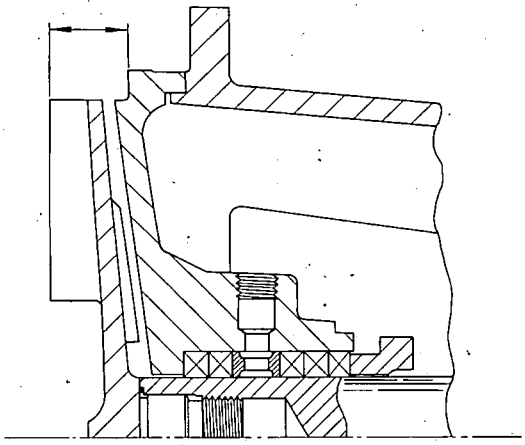

"ON-THE-BENCH" ROTOR SETTING

Figure 11

Pump Size	Setting
1½ x 1 x 6	.733
3 x 1½ x 6	.873
1½ x 1 x 8	.776
3 x 2 x 6	1.109
3 x 1½ x 8	.867
3 x 2 x 8	.952
4 x 3 x 8	1.143
4 x 3 x 8L	1.363
2 x 1 x 10	.680
3 x 1½ x 10	1.019
3 x 2 x 10	1.086
4 x 3 x 10	1.201
4 x 3 x 10L	1.502
6 x 4 x 10	2.152
3 x 1½ x 13	1.067
3 x 2 x 13	1.172
4 x 3 x 13	1.294

E. Starting the Pump

After all pre-starting checks have been performed, the pump is ready to start. Observe the following procedure to put the pump into operation.

1: Rotate the pump by hand through at least one complete revolution to see that all parts are free. It is possible that pipe strains or extreme rough handling during shipment may have caused binding. If so, the piping should be disconnected and source of pipe strain found and eliminated. Bolts holding the pump casing, supporting head and suction pipe should be loosened and the parts shifted until the binding is eliminated. Re-check coupling alignment.

2. Prime the pump. This may be accomplished by using a foot valve in the suction pipe and filling the suction line and casing with fluid. Pumps operating under a suction lift may be primed by an ejector or exhaustor placed on the discharge piping. The unit is self venting.

CAUTION: Before starting or while operating the pump, the casing and suction line must be completely filled with the liquid being pumped. The rotating parts depend on this liquid for lubrication and the pump may seize if operated without liquid.

3. Investigate the source of liquid supply, and see that the discharge line is properly arranged to handle the liquid pumped. When starting the pump for the first time, and always when there is no pressure in the discharge line, close the gate valve in the discharge line.

4. If the stuffing box is externally lubricated, open the seal valve to allow liquid to flow into the box. If an external seal and/or water-cooled casing cover and/or smothering gland is used, taps should be connected to a cool liquid source of sufficient pressure to provide an adequate flow. Pipe tap requirements are indicated on the pump general arrangement drawing.

If the stuffing box is grease sealed, inject grease until resistance is felt.

5. If the pump is to handle hot liquid, open the suction valve to allow a very slight flow of liquid into the pump casing, thereby heating the pump slowly and evenly. Open the suction valve wide before starting.

CAUTION: When pump is handling heavy viscous liquid, the viscosity of the liquid must allow it to be pumped easily. Liquid may have to be heated prior to starting the pump.

6. Start the driver. Bring pump up to speed quickly so interal parts receive lubrication.

7. As soon as the pump is up to rated speed, open the discharge valve slowly to avoid abrupt changes in velocity and surging in the suction line. Do not operate the pump against a closed discharge valve for any length of time or the liquid in the pump will be heated until it vaporizes. This will cause the pump to seize or lose suction.

8. With pumps that are packed it is important to keep the gland as loose as possible without undue leakage, for packing lubrication. A normal leakage rate is between 20-30 drops/minute. A tight gland will cause excessive packing and shaft sleeve wear, and also increase power consumption.

9. After the unit has operated for a short time, all pressure bolting should be gone over for tightness. Also check coupling alignment and impeller running clearance.

F. Operating Checks

WARNING: In the interest of operator safety the unit must not be operated above the nameplate conditions. Such operation could result in unit failure causing injury to operating personnel. Consult instruction book for proper operation and maintenance of the pump and its supporting components.

1. Check frequently to make certain lubricating liquid flow to the stuffing box, jacketed stuffing box cover (if used) is adequate.

2. Make certain that liquid is always being discharged from the pump. If not, the pump may seize. A discharge pressure gauge is the best method to check whether or not liquid is being pumped. If the gauge should drop to zero or register abnormal pressure, shut down the pump immediately and determine the cause.

3. If your pump is equipped with a packed box, a slight amount of leakage through the packing is required to cool and lubricate the packing. Adjust the gland for proper leakage of 20-30 drops per minute.

4. Bearings will run at a constant temperature, depending on the air temperature at the location (normal operating temperature will be 140 to 180 degrees F based on 80 degree ambient temperature). Check the oil level and refill the constant-level oiler, when used as required. If bearing temperature exceeds 200 degree F, the pump should be shut down and the cause of the overheating located.

WARNING: Operation of the unit without proper lubrication can result in overheating of the bearings, bearing failures, pump seizures and actual breakup of the equipment exposing operating personnel to personal injury.

WARNING: The unit must not be operated unless coupling guard is in place. Failure to observe this warning could result in personal injury to operating personnel.

G. Throttling the Pump

If conditions require operating the pump at reduced capacity, this must be done by throttling (or partly closing) the discharge valve. Never throttle the suction line.

CAUTION: When operating for some time at reduced capacity, much of the pump horsepower will go into the liquid in the form of heat. A bypass must be provided under these conditions to prevent the liquid in the pump from becoming hot enough to vaporize.

Always maintain sufficient flow through the pump to prevent flashing of the liquid passing through the pump. At low flows, a large proportion of the horsepower input is absorbed by the liquid as heat, and the flow must be maintained at a point sufficient to keep the temperature rise thru the pump within a safe limit.

CAUTION: Damage to pump may result from prolonged operations at reduced capacities.

In addition to heat rise considerations for minimum flow, there is also a minimum flow requirement for mechanical protection of the pump. Damage to the pump may occur at reduced capacities due to increased hydraulic thrust loads. These higher loads cause increased vibration and shaft deflection, and decreased mechanical seal and bearing life.

Also encountered at low flows is the damage which could be done by erosive swirl. At low flows, much of the pumped liquid is recirculated through the pump. This can result in localized damage to the pump by erosive action, particularly when pumping light slurries or "dirty" liquids.

Both heat rise and mechanical protection must be considered when determining correct minimum flow. HOC Pumps have been designed to operate at low flows without problems due to hydraulic thrust; however, the table on page 13 lists minimum flows required for satisfactory operation and pump life. The figures listed are percent flow of the best efficiency point of the impeller diameter required for the application.

H. Stopping the Pump

1. If the packing or mechanical seal is lubricated from an external source, do not shut off the lubricating liquid supply until after the unit is shut down.
2. If a check valve is installed in the discharge line, the pump may be shut down by merely stopping the driver. If a check valve is not installed in the discharge line, shut down the pump by closing the discharge valve, after which the driver is to be stopped immediately.
3. It is good practice to close the suction valve if the pump is to be shut down for an extended period of time.
4. When the pump is idle and there is a possibility of freezing the casing plug should be removed and the casing drained.
5. If pumps are on hot service and are put on standby, keep cooling liquid on.

I. Trouble Chart

TROUBLE CHART

If any of the following troubles are encountered, they may be due to the causes listed below

No Liquid Delivered:
1. Pump not primed.
2. Speed too low-check voltage and frequency.
3. Air leak in suction or stuffing box.
4. Discharge head too high.
5. Suction lift too high.
6. Impeller or discharge line plugged up.
7. Wrong direction of rotation.
8. Discharge valve closed.

Not Enough Liquid Delivered:
1. Air leaks in suction or stuffing box.
2. Speed too low-check voltage and frequency.
3. Suction lift too high.
4. Impeller or discharge line partially plugged.
5. Not enough suction head for hot liquid.
6. Total head too high.
7. Pump defects:
   a. Excessive impeller running clearance.
   b. Damaged or clogged impeller or casing.
8. Suction not submerged.
9. Wrong direction of rotation.

Not Enough Pressure:
1. Speed too low-check voltage and frequency.
2. Wrong direction of rotation.
3. Air or gas in liquid.
4. Leaks in suction.
5. Pumps defects:
   a. Excessive impeller running clearance.
   b. Impeller diameter too small.
   c. Damaged or clogged impeller or casing.

Pump Works for a While, Then Loses Suction:
1. Leaky suction line.
2. Liquid seal plugged.
3. Suction lift too high.
4. Air or gas in liquid.
5. Air leaks in suction or at stuffing box.
6. End of suction line uncovered.

TROUBLE CHART (continued)

Motor Runs Hot:
1. Pump taking too much power:
   a. Speed too high.
   b. Head lower than rating allowing pump to handle too much liquid.
   c. Liquid heavier and more viscous than rating.
   d. Pump defects:
      1. Excess impeller running clearance.
      2. Stuffing boxes too tight.
      3. Rotor binding.
2. Electrical defects:
   a. Voltage and frequency lower than rating.
   b. Defects in motor.

Vibration:
1. Starved suction:
   a. Gas or vapor in the liquid.
   b. Available NPSH not sufficient.
   c. Inlet to suction line not sufficiently submerged.
   d. Gas or vapor pocket in suction line.
2. Misalignment.
3. Worn or loose bearings.
4. Rotor out of balance.
5. Shaft bent.
6. Impeller plugged or damaged.

Stuffing Boxes Overheat:
1. Packing too tight.
2. Packing not sufficiently lubricated.
3. Wrong grade of packing.
4. Box not properly packed.

Bearings Overheat:
1. Oil level too low.
2. Improper or poor grade of oil.
3. Dirt or water in bearings.
4. Misalignment.

Bearings Wear Rapidly:
1. Misalignment.
2. Shaft bent.
3. Vibration.
4. Lack of lubrication.
5. Bearing improperly installed.
6. Moisture in oil.
7. Dirt in bearings.

J. Technical Data

Minimum Flow for Mechanical Protection

Refer to "Throttling the Pump" section on page 12 for explanation on use of chart.

Pump Size	Min. Flow (%)	Pump Size	Min. Flow (%)
1½ x 1 x 6	10	4 x 3 x 10	25
3 x 1½ x 6	10	4 x 3 x 10L	25
3 x 2 x 6	10	6 x 4 x 10	25
1½ x 1 x 8	10	3 x 1½ x 13	15
3 x 1½ x 8	10	3 x 2 x 13	20
3 x 2 x 8	10	4 x 3 x 13	25
4 x 3 x 8	20	6 x 4 x 13	25
4 x 3 x 8L	20	8 x 6 x 13	25
2 x 1 x 10	10	10 x 8 x 13	30
3 x 1½ x 10	10	8 x 6 x 15	25
3 x 2 x 10	15	10 x 8 x 15	30

Net Positive Suction Head (NPSH)

Any liquid, hot or cold, must be pushed into the impeller of the pump by some absolute pressure, such as the atmosphere or the vessel pressure from which the pump takes its suction.

The head in feet of liquid necessary to maintain the required flow into the pump is called the Net Positive Suction Head. This value, more commonly called NPSH, is measured above the vapor pressure of the liquid at the pumping temperature.

NPSH is commonly expressed in two ways: the NPSH required by the pump, and shown on the pump curve, is the head needed to cover the losses in the pump suction: the NPSH available is that inherent in the system, taking into account friction loss in suction piping, valves, fittings, etc. In all cases, the NPSH available, measured above vapor pressure, must exceed the NPSH required in order to push the liquid into the pump.

Changing Pump Speed

Changing the speed of a centrifugal pump affects the capacity, total head, NPSH required and the brake horsepower. In general the capacity will vary in a direct ratio with the speed, whereas the total head and NPSH required will vary as the ratio of the speed squared. The brake horsepower will vary as the ratio of the speed cubed.

Effects of Viscosity

The pump is designed to deliver rated capacity at rated head for a liquid with a particular viscosity. When the pump is handling heavy viscous liquid, the viscosity of the liquid must allow it to be pumped easily. Liquid may have to be heated prior to starting of pump.

When contemplating operation at some viscosity other than that for which the pump was originally designed, the changed conditions should be referred to the nearest Ingersoll-Rand Branch Office for their recommendations.

Effects of Specific Gravity

The capacity and total head in feet of liquid developed by a centrifugal pump are fixed for every point on the curve and are always the same for the same speed. Neither capacity nor total head will be affected by a change in the specific gravity of the liquid pumped. However, since the discharge pressure in PSI(pounds per square inch) and the brake horsepower required to drive the pump are functions of the specific gravity of the liquid, both will be affected in direct proportion by any change in specific gravity.

Therefore, an increase in specific gravity will raise the discharge pressure and is dangerous, as it might overload the pump's driver, or exceed the pump casing allowable pressure.

IV. Maintenance

WARNING: Do not attempt any maintenance, inspection, repair or cleaning in the vicinity of operating rotating equipment. Such action could result in injury to operating personnel.

Before attempting any inspection or repair on the pump the driver controls must be in the "off" position, locked and tagged to prevent injury to personnel performing service on the pump.

A. Preventive Maintenance

Ingersoll-Rand pumps are ruggedly constructed, and with proper care will give years of satisfactory service. It is recommended that operating personnel become familiar with "Operating Checks" described previously in this book, and that these checks be made as a matter of routine.

Periodically, depending upon your service schedule, the unit should be dismantled, and all internal parts and passages cleaned and inspected for wear.

Foreign matter found in the pump should be removed, and all excessively worn parts replaced.

Ingersoll-Rand assumes no responsibility or liability for damages caused by the use and failure of the pump which has been fitted with spare or repair parts not of Ingersoll-Rand manufacture. Only genuine parts from Ingersoll-Rand or an authorized distributor should be used.

The following is a list of normal maintenance procedures that might be performed between major overhauls.

B. Replacing Packing

When packing becomes worn to the extent that leakage cannot be controlled within desirable units, it is advisable to re-pack the stuffing box.

Remove the nuts securing the gland, and remove or pull gland back out of the way. With the aid of a hook, pull the packing and seal cage(if used) from the stuffing box.

Thoroughly clean the stuffing box, and inspect the shaft sleeve before re-packing. Leakage may be due to a worn sleeve requiring replacement.

Refer to previous instructions in "Stuffing Box" on page 7.

C. Replacement of Mechanical Seal

Mechanical seals should be checked, particularly during the first hours of operation. Minor leakage through the seal usually stops after a short time; however,if it continues, stop the pump and examine the seal. Excessive leakage past a mechanical seal usually indicates worn or broken parts, which require replacement.

To replace a mechanical seal, the pump must be dismantled (See Disassembly). The stationary part of a seal must be removed from the gland and replaced by a new part.

Remove the gland gasket, thoroughly clean the gland and replace the gasket.

Remove seal from shaft sleeve and inspect sleeve (if furnished).

To re-set new inside or double seals, pre-assemble the pump rotor complete less seal and gland. Adjust rotor per the "on-the-bench" impeller clearance instructions on page 10. Scribe the shaft sleeve or shaft(if sleeveless)at the location of the face of the stuffing box.

Remove impeller and stuffing box cover, and mark dimension(see appropriate "X" dimension in "Seal Types and Settings" section) on the shaft sleeve (or shaft). Locate seal at this position, but do not snugly tighten set screws until shaft sleeve is installed on shaft. Install gland, then shaft sleeve with seal. Tighten seal set screws. Reassemble rest of rotor.

Outside seals are set by completely building the rotor (including seal and gland), and adjusting rotor per instructions. Set and secure seal per appropriate "X" dimension.

For seals other than those shown, refer to seal drawings supplied with unit.

D. Seal Types and Settings

With John Crane Type 1 with plain glands (no flush tap connection located on the gland), the setting is automatic since the seal is located against a shoulder on the sleeve. For other types of seals set seal per "X" below or refer to seal drawing included with unit.

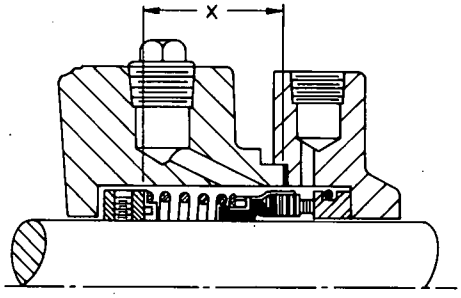

Crane Type 1

Seal Size	1⅛	1⅞	2⅛	2⅜
"X"	1.12	1.56	1.56	2.00

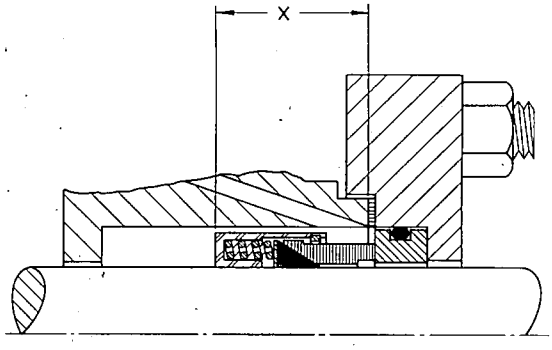

"X" Dim for Crane Seals

Seal Size	Gland Style	9T "x"	9BT "x"
1⅛	Plain	.94	1.31
	Flush	.50	.88
1⅞	Plain	1.31	1.69
	Flush	.81	1.19
2⅛	Plain	1.69	2.06
	Flush	1.19	1.38
2⅜	Plain	1.62	2.00
	Flush	1.19	1.56

NOTE: Maximum Gland Nut Torque:
5ft-lbs Group 1
10ft-lbs Group 2
12ft-lbs Group 3

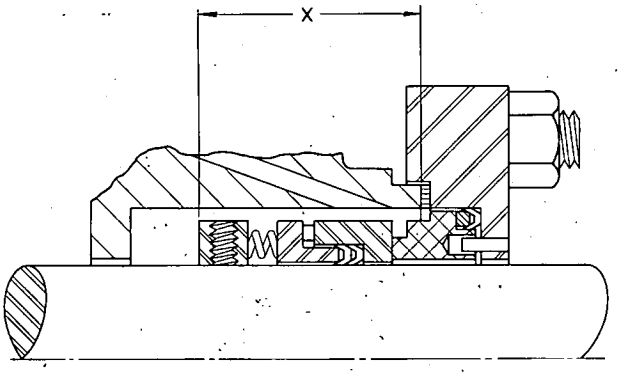

"X" Dim for Dura Seals

Seal Size	Gland Style	RO/RO-TT *"x"	PT/PTO "x"	CRO-P "x"
1⅛	Plain	1.66	1.84	1.41
	Flush	1.22	1.41	.97
1⅞	Plain	1.81	2.06	1.62
	Flush	1.31	1.56	1.12
2⅛	Plain	1.59	2.12	1.41
	Flush	1.09	1.62	.91
2⅜	Plain	1.53	2.12	1.34
	Flush	1.09	1.69	.91

*Basis RO/RO-TT seals with .25" long springs. If replacement seals have .50" long springs add .25" to "x" dim.

E. Bearing Lubrication

On pumps furnished with oil-lubricated bearings, check the bottle on the constant-level oiler periodically to be sure there is an adequate supply of oil.

The oil in the bearing housing should be changed every 1000 hours, or sooner if the operating conditions or pump environment dictates. Before filling with new oil, flush the bearing housing with a hot, light oil, rotating the pump shaft by hand to remove dirt and contaminants.

Refill the bearing housing through the vent connection, using a good quality mineral oil which is non-detergent, and has anti-rust and anti-oxidant additives. The grade of oil should be ISO VG 100 (between SAE grade 30 and 40). Typical good oils include: Gulf Harmony 100 and Mobil DTE Heavy.

Refer to previous instructions under "Lubrication" on Page 9 for proper setting of the constant-level oiler.

Pumps furnished with grease lubricated bearings require re-greasing of the thrust bearing (Part 25A19) at 4000 hours intervals. A moisture-resistant, lithium-based grease of number 2 consistency should be used. Typical good grease include: Texaco premium RB, Chevron SRI#2, and Esso Ronex MP.

Grease should be added while the pump is running. Since over-lubrication is as harmful as under-lubrication, the plug in the bottom of the bearing end cover should be removed when adding grease. Let the pump run awhile with the plug removed to allow excess grease to be expelled.

Periodically, the bearings should be thoroughly cleaned to remove old grease and contaminents. This generally can be done at the time the pump is torn down for major overhauls.

The radial bearing (Part 27A19) is factory-sealed and lubricated-for-life, and needs no further attention.

F. Overhaul Instructions

The back withdrawal feature of the pump enables the complete unit to be dismantled without disturbing the pump casing and piping.

Shut off valves controlling fluid flow to and from the pump. Drain casing. Drain bearing housing.

Disconnect any seal piping, and any cooling services that might be supplied to either the stuffing box cover or cradle.

WARNING: Before attempting to disassemble pump, pump must be isolated from system, drained of liquid and cooled, if pump is handling hot liquid.

Again make certain the driver control is in the off position, locked, and tagged.

When pump is handling "caustic" liquid, extreme care must be taken to ensure safety of personnel when attempting to drain pump. Protective devices of suitable protective materials must be worn when draining pump.

G. Disassembly

Remove coupling spacer piece.

Remove bolts from main casing flange.

By use of jacking screws the complete rotating unit can now be withdrawn from the casing.

Remove gland nuts and withdraw gland onto shaft. If the unit has a packed box, remove packing and lantern ring.

Secure shaft and unscrew impeller counter-clockwise when looking into the impeller. Be careful not to damage the surface of the impeller.

Remove bolts holding the support head to the stuffing box cover and withdraw stuffing box cover.

Remove shaft sleeve (if supplied), seal and flinger.

To dismantle shaft assembly, remove bolts holding the end cover to the bearing housing.

The complete shaft assembly can now be withdrawn.

To remove the thrust bearing unscrew locknut (NOTE: LOCKNUT IS LEFT HAND THREADED) and withdraw end cover. The bearing can then be removed after removing bearing locknut and washer.

The dismantling of the support head from the bearing housing should not generally be necessary.

H. Cleaning and Inspection

Discard all gaskets, O-rings, packing, and lip seals since new parts are recommended for re-assembly.

Ingersoll-Rand assumes no responsibility or liability for damages caused by the use and failure of the pump which has been fitted with spare or repair parts not of Ingersoll-Rand manufacture. Only genuine parts from Ingersoll-Rand or an authorized distributor should be used.

All parts must be clean before reassembly. This is especially important at O-ring grooves, threads, radial fit contact areas, and gasket surfaces.

Wash all parts in solvent and dry with compressed air or lint free cloths. Carry out the inspection procedure described below.

Inspect the impeller vanes and back ribs for wear, erosion, burrs, or scoring. Large nicks and deep pitting will unbalance the impeller and may cause vibration and excessive wear, on other parts of the pump. Check and clean the impeller threads and O-ring seating surface.

Check surface of shaft sleeve (if supplied) for scoring and scratches, particularly on packed box units.

Make certain that the sleeve end is clean where the O-ring and impeller are located.

The stuffing box bore must be inspected and thoroughly cleaned. Make certain that there are no deep scratches. If necessary, clean the gland studs.

Check also the seal cage and seal flush openings, making sure that all foreign matter has been removed from the threads and drilled passages. Examine the radial fit for burrs, etc.

Check shaft for straightness (on rollers positioned at bearing diameters). Shaft runout should be no more than .001". Check that surfaces are free from scores, wear and corrosion. The shoulder against the impeller and shaft sleeve should be carefully checked. Impeller threads should be clean and undamaged. On the opposite end, the keyway should be undamaged, and the key should fit snugly.

Inspect surface of gland that contacts packing to be sure that it is clean and smooth. On mechanical seal glands, remove old gasket material and check inside diameter of glands.

Inspect casing thoroughly, removing all burrs and foreign matter. Check hydraulic passages for cleanliness, particularly behind the splitter in the volute area (on pumps so equiped).

I. Pump Reassembly

CAUTION: It is important that, if bearing replacement is required, the new bearings installed be of the brand and construction as specified in this section. Despite manufacturers' claims, there is a difference in load-carrying capacity and life characteristics between different brands of manufacturers.

Only FAG, New Departure, or MRC are approved as suppliers of double row bearings for this pump.

Assemble the double row bearing on the shaft so that the filling slots of the bearing faces the impeller end of the shaft. Refer to Figure 12.

The bearing end cover must be free of fins or burrs. Make sure of proper bore finish and that the shoulder at the bottom of the bore is clean and undamaged.

Insert bearing (assembled on shaft) into the bearing end cover, making sure it is firmly bottomed against shoulder. The bearing should be .000" to .002" loose fit on the outer race when fitted into the bearing end cover.

Re-install the locknut (NOTE: LOCKNUT IS THREADED LEFT HANDED) into the bearing end cover. Refer to Figure 13.

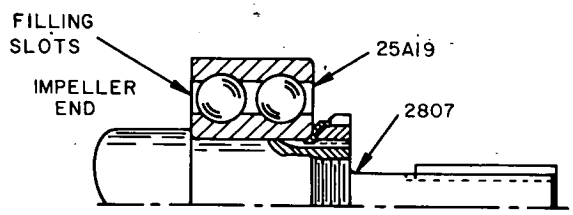

Figure 12

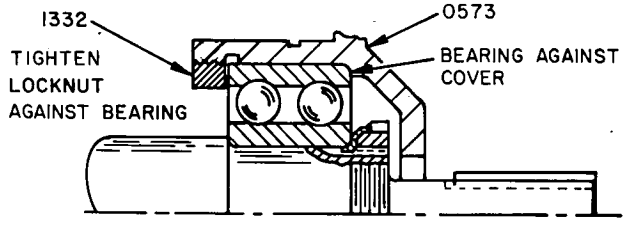

Figure 13

For the optional duplex bearing, install the bearings back to back. Insert duplex bearings into bearing end cover. Re-install the locknut into the bearing end cover (NOTE: LOCKNUT IS THREADED LEFT HANDED). Tighten the locknut against the bearing and then back off such that a .005" feeler gage fits between the bearing and locknut at at least three places. Then tighten setscrew thru end cover into locknut to prevent it from loosening. Refer to Figure 14.

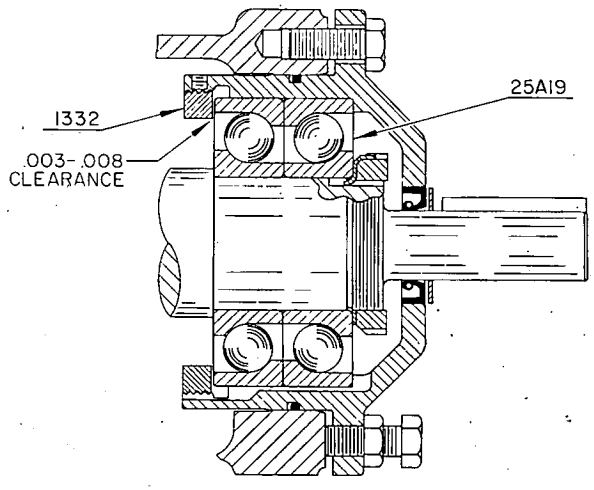

Figure 14

Position O-ring on outside of bearing end cover making certain that it is not twisted and then position shaft assembly into bearing housing. Check shaft end play which should be .003" or less (.008 on duplex bearings).

Bolts holding bearing housing to end cover should be finger tightened. Assemble and install bolts and jamnuts.

If the support head had been removed, place gasket into position and bolt on support head.

Replace lip seals in support head and bearing end cover.

Position flingers shaft.

Position seal stationary face in gland (Mechanical Seal only) and place gland on shaft.

Place shaft sleeve(if provided) on shaft. Position mechanical seal. (See "Replacement of Mechanical Seal" Page 14).

Assemble stuffing box cover and support head.

Position O-ring and screw on impeller. Take care that O-ring does not get torn.

Check complete rotating assembly per Figure 15 before installing in casing. If dial indicator readings exceed limits shown, individual components will need to be checked out to find cause of excessive readings.

Position main gasket and bolt on pump casing.

Bolt on gland (mechanical seal version) or pack stuffing box (see "Stuffing Box" Page 7).

Set impeller running clearance (See "Impeller Running Clearance" Page 10).

Use the following table for recommended torque values (unless instructed otherwise in this book).

Fastener Size:	¼	⅜	½ Studs	½ Bolts	¾
Torque (Foot-Pounds)	4	12	45	30	100

NOTE: Torque values are based on well-lubricated threads. Twice as much torque might have to be applied if unlubricated fasteners are used.

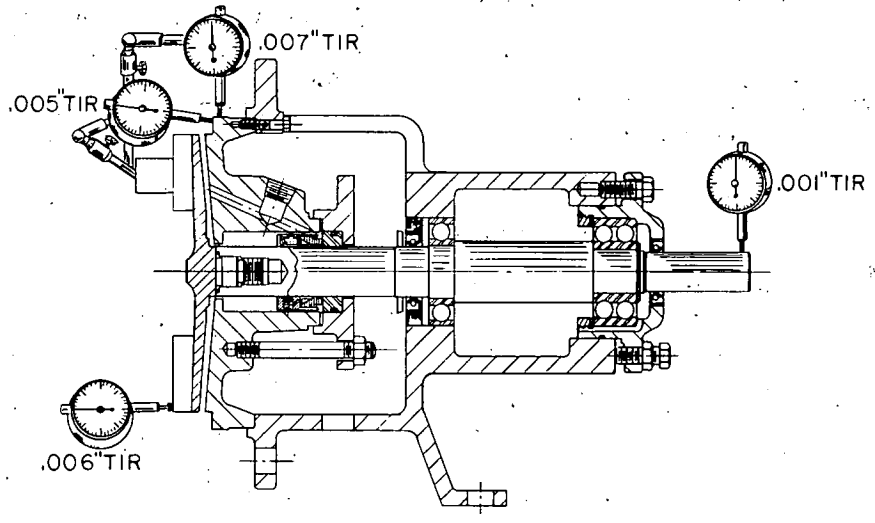

COMPLETE ROTATING ASSEMBLY

GROUP I

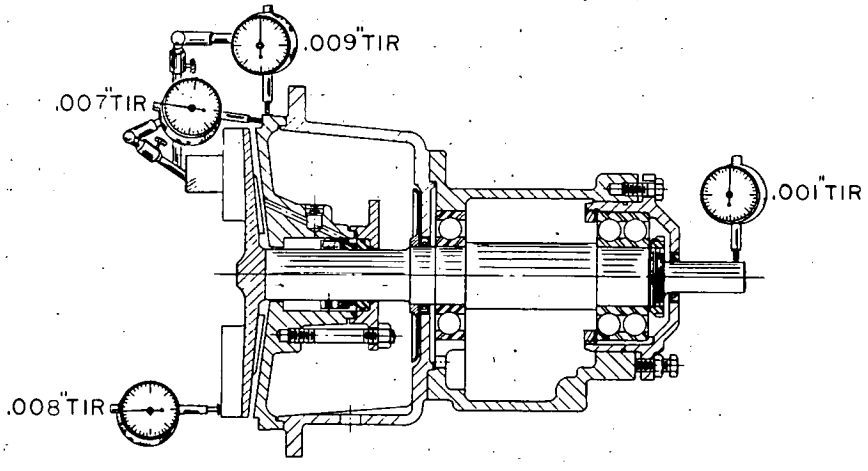

COMPLETE ROTATING ASSEMBLY

GROUP 2&3

Figure 15

V. Ordering Instructions

BY GIVING COMPLETE INFORMATION YOU WILL ENABLE US TO FILL YOUR ORDER CORRECTLY AND AVOID UNNECESSARY DELAYS

A. How to Order Replacement Parts

When ordering replacement parts, please specify:

1. The SIZE & TYPE and SERIAL NUMBER as stamped on the PUMP nameplate. (The size is the numerical prefix to the Type.)
2. The FORM NUMBER of this booklet. Form SPAD-187.
3. The QUANTITY.
4. The PART NUMBER AND DESCRIPTION exactly as listed.

EXAMPLE

4 X 3 X 8 HOC Serial No. 0587-5001
Form SPAD-187 1-Casing-2469 1-Impeller-1129

B. How to Select Recommended Spares

Each Parts List shows the parts which are included in each of the following three classes of recommended spares:

CLASS 1—MINIMUM—Suggested for Domestic Service when pump is handling clean noncorrosive liquids and where interruptions in service are not important.

CLASS 2—AVERAGE—Suggested for Domestic Service when pump is handling abrasive or corrosive liquids and where some interruptions in continuity of service are are not objectionable.

CLASS 3—MAXIMUM—Suggested for Export, Marine, or Domestic Service where interruptions in service are objectionable.

Our sales Representative in your area will gladly review the class of spares best suited to meet your requirements.

When ordering recommended spares, please follow the procedure as outlined for replacement parts.

HOC2 Interchangeability

	Group 1			Group 2																Group 3			
	1.5 x 1 x 6	3 x 1.5 x 6	1.5 x 1 x 8	3 x 2 x 6	3 x 1.5 x 8	3 x 2 x 8	4 x 3 x 8	4 x 3 x 8L	2 x 1 x 10	3 x 1.5 x 10	3 x 2 x 10	4 x 3 x 10	4 x 3 x 10L	6 x 4 x 10	3 x 1.5 x 13	3 x 2 x 13	4 x 3 x 13	6 x 4 x 13	8 x 6 x 13	10 x 8 x 13	8 x 6 x 15	10 x 8 x 15
Casing	1	2	3	4	5	6	7	8	9	10	11	12	13	14	15	16	17	18	19	20	21	22
Casing Cover	1	1	2	3	4	4	4	4	5	5	5	5	5	5	6	6	6	7	8	8	9	9
Main Gasket	1	1	2	1	3	3	3	3	4	4	4	4	4	4	5	5	5	5	5	5	6	6
Impeller	1	2	3	4	5	6	7	8	9	10	11	12	13	14	15	16	17	18	19	20	21	22
Support Head				1	2	2	2	2	3	3	3	3	3	3	4	4	4	5	6	6	7	7
Shaft Sleeve	1	1	1	2	2	2	2	2	2	2	2	2	2	2	2	2	2	2	3	3	3	3
Gland	1	1	1	2	2	2	2	2	2	2	2	2	2	2	2	2	2	2	3	3	3	3
Flinger	1	1	1	2	2	2	2	2	2	2	2	2	2	2	2	2	2	3	4	4	4	4
Brg Housing	1	1	1	2	2	2	2	2	2	2	2	2	2	2	2	2	2	2	3	3	3	3
Shaft	1	1	1	2	2	2	2	2	2	2	2	2	2	2	2	2	2	2	3	3	3	3
Brg End Cover	1	1	1	2	2	2	2	2	2	2	2	2	2	2	2	2	2	2	3	3	3	3
Radial Brg	1	1	1	2	2	2	2	2	2	2	2	2	2	2	2	2	2	2	3	3	3	3
Thrust Brg	1	1	1	2	2	2	2	2	2	2	2	2	2	2	2	2	2	2	3	3	3	3
Imp O-Ring	1	1	1	2	2	2	2	2	2	2	2	2	2	2	2	2	2	2	3	3	3	3
Lip Seal-Pump End	1	1	1	2	2	2	2	2	2	2	2	2	2	2	2	2	2	2	3	3	3	3
Lip Seal-Cplg End	1	1	1	2	2	2	2	2	2	2	2	2	2	2	2	2	2	2	3	3	3	3

Engineering Information

	Pump Size		1.5 x 1 x 6	3 x 1.5 x 6	1.5 x 1 x 8	3 x 2 x 6	3 x 1.5 x 8	3 x 2 x 8	4 x 3 x 8	4 x 3 x 8L	2 x 1 x 10	3 x 1.5 x 10	3 x 2 x 10	4 x 3 x 10	4 x 3 x 10L	6 x 4 x 10	3 x 1.5 x 13	3 x 2 x 13	4 x 3 x 13	6 x 4 x 13	8 x 6 x 13	10 x 8 x 13	8 x 6 x 15	10 x 8 x 15
	Group:		1	1	1	2	2	2	2	2	2	2	2	2	2	2	2	2	2	2	3	3	3	3
PUMP DATA	Suction Flange		1.5	3	1.5	3	3	3	4	4	2	3	3	4	4	6	3	3	4	6	8	10	8	10
	Discharge Flange		1	1.5	1	2	1.5	2	3	3	1	1.5	2	3	3	4	1.5	2	3	4	6	8	6	8
	Max. Imp. Dia.	3550 RPM	6.25	6.25	8.00	6.25	8.50	8.50	8.50	8.00	9.88	10.75	10.75	10.75	9.75	8.00	12.25	12.00	10.00	N/A	N/A	N/A	N/A	N/A
		1750 RPM	6.25	6.25	8.00	6.25	8.50	8.50	8.50	8.50	9.88	10.75	10.75	10.75	10.75	10.75	13.25	13.25	13.25	13.00	13.25	13.25	15.00	15.00
	Imp. Eye Area (Sq In)		2.76	4.68	3.14	6.51	4.91	6.47	11.79	11.84	3.54	7.06	8.61	12.56	12.56	23.75	7.07	8.30	15.07	28.27	50.20	58.50	50.20	65.50
	Max. Sphere Size		.39	.53	.46	.57	.50	.59	.78	.81	.23	.48	.58	.70	.91	1.02	.49	.57	.87	1.00	1.00	1.12	.94	1.25
	Wr Sq. (Less Motor) Ft-Lbs Sq		.10	.11	.30	.14	.38	.46	.52	.55	.95	1.10	1.10	1.30	1.35	1.80	2.60	2.90	3.20	4.50	6.00	8.10	10.20	12.00
CASING DATA	Imp. Clearance—Front		.010	.010	.010	.015	.015	.015	.015	.015	.015	.015	.015	.015	.015	.015	.015	.015	.015	.015	.020	.020	.020	.020
	Casing Thickness		.32	.32	.32	.32	.32	.32	.35	.35	.35	.35	.38	.38	.38	.44	.44	.44	.44	.44	.56	.56	.56	.56
	Corrosion Allowance		.12	.12	.12	.12	.12	.12	.12	.12	.12	.12	.12	.12	.12	.12	.12	.12	.12	.12	.12	.12	.12	.12
	Aux Connections (NPT)	Drain	.50	.50	.50	.50	.50	.50	.50	.50	.50	.50	.50	.50	.50	.50	.50	.50	.50	.50	.50	.50	.50	.50
		Disch. Gage	.38	.38	.38	.38	.38	.38	.38	.38	.38	.38	.38	.38	.38	.38	.38	.38	.38	.38	.38	.38	.38	.38
		Suct. Gage	.38	.38	.38	.38	.38	.38	.38	.38	.38	.38	.38	.38	.38	.38	.38	.38	.38	.38	.38	.38	.38	.38
SUFFING BOX DATA	Sleeve O.D.		1.125	1.125	1.125	1.875	1.875	1.875	1.875	1.875	1.875	1.875	1.875	1.875	1.875	1.875*	1.875	1.875	1.875*	1.875	2.375	2.375	2.375	2.375
	Stuffing Box Bore		1.750	1.750	1.750	2.625	2.625	2.625	2.625	2.625	2.625	2.625	2.625	2.625	2.625	2.625**	2.625	2.625	2.625**	2.625	3.250	3.250	3.250	3.250
	Depth of Box		2.06	2.06	2.06	2.44	2.44	2.44	2.44	2.44	2.44	2.44	2.44	2.44	2.44	2.44	2.44	2.44	2.44	2.44	3.56	3.56	3.56	3.56
	Dist. to 1st Obstruction		1.91	1.91	1.91	2.16	2.16	2.16	2.16	2.16	2.16	2.16	2.16	2.16	2.16	2.16	2.16	2.16	2.16	2.16	3.69	3.69	3.69	3.69
	Packing Size (Sq)		.31	.31	.31	.38	.38	.38	.38	.38	.38	.38	.38	.38	.38	.38	.38	.38	.38	.38	.44	.44	.44	.44
	Packing Arrangement		2-C-3	2-C-3	2-C-3	2-C-3	2-C-3	2-C-3	2-C-3	2-C-3	2-C-3	2-C-3	2-C-3	2-C-3	2-C-3	2-C-3	2-C-3	2-C-3	2-C-3	2-C-3	3-C-3	3-C-3	3-C-3	3-C-3
	Width of Seal Cage		.50	.50	.50	.50	.50	.50	.50	.50	.50	.50	.50	.50	.50	.50	.50	.50	.50	.50	.75	.75	.75	.75
	Box & Gland Conn. (NPT)		.38	.38	.38	.38	.38	.38	.38	.38	.38	.38	.38	.38	.38	.38	.38	.38	.38	.38	.38	.38	.38	.38
SHAFT AND BEARING DATA	Diameter at Impeller		.62	.62	.62	1.25	1.25	1.25	1.25	1.25	1.25	1.25	1.25	1.25	1.25	1.25	1.25	1.25	1.25	1.25	1.62	1.62	1.62	1.62
	Diameter Under Sleeve		.88	.88	.88	1.62	2.17	2.17	2.17	2.17	2.17	2.17	2.17	2.17	2.17	2.17	2.17	2.17	2.17	2.17	2.56	2.56	2.56	2.56
	Diameter at I.B. BRG		1.18	1.18	1.18	2.17	2.17	2.17	2.17	2.17	2.17	2.17	2.17	2.17	2.17	2.17	2.17	2.17	2.17	2.17	2.56	2.56	2.56	2.56
	Diameter at O.B. BRG		.98	.98	.98	2.17	2.17	2.17	2.17	2.17	2.17	2.17	2.17	2.17	2.17	2.17	2.17	2.17	2.17	2.17	2.56	2.56	2.56	2.56
	Diameter between Bearings		1.31	1.31	1.31	2.44	2.44	2.44	2.44	2.44	2.44	2.44	2.44	2.44	2.44	2.44	2.44	2.44	2.44	2.44	3.00	3.00	3.00	3.00
	Bearing Span		4.00	4.00	4.00	6.50	6.50	6.50	6.50	6.50	6.50	6.50	6.50	6.50	6.50	6.50	6.50	6.50	6.50	6.50	9.88	9.88	9.88	9.88
	Diameter at Coupling		.88	.88	.88	1.12	1.12	1.12	1.12	1.12	1.12	1.12	1.12	1.12	1.12	1.12***	1.12	1.12	1.12***	1.12	2.38	2.38	2.38	2.38
	Bearing Number—Inboard		206	206	206	311	311	311	311	311	311	311	311	311	311	311	311	311	311	311	313	313	313	313
	Bearing Number—Outboard		5305	5305	5305	5311	5311	5311	5311	5311	5311	5311	5311	5311	5311	5311	5311	5311	5311	5311	5313	5313	5313	5313
	Impeller Overhand		5.81	5.97	6.44	8.00	7.65	7.62	7.75	7.92	7.84	7.75	7.84	7.94	8.12	8.50	7.75	8.00	8.00	8.03	10.38	10.56	10.38	10.56
	1st Critical Speed		12175	11364	6226	17523	15625	13992	13393	13273	13393	11943	11943	10965	10845	10653	9817	9282	10417	7353	7211	6168	6356	5823
	Oil Capacity (Pints)		1.0	1.0	1.0	3.0	3.0	3.0	3.0	3.0	3.0	3.0	3.0	3.0	3.0	3.0	3.0	3.0	3.0	3.0	7.0	7.0	7.0	7.0

*6x4x10 & 4x3x13—2.12 at 3550 RPM
**6x4x10 & 4x3x13—2.94 at 3550 RPM
***6x4x10 & 4x3x13—1.62 at 3550 RPM

All Dimensions in Inches (Unless Otherwise Specified)

BHP Limits

Group	BHP/100 RPM	3550	2900	1750	1450	1180	970	880
Group 1	.57	20	16.5	10	8	7	5.5	4
Group 2	3.66	130	110	65	53	43	35.5	32
Group 2A	4.22	150	122	75	61	50	41	37
Group 3	12.36			220	179	146	120	109

Type HOC2 Pump
Group 1 Cross-Sectional

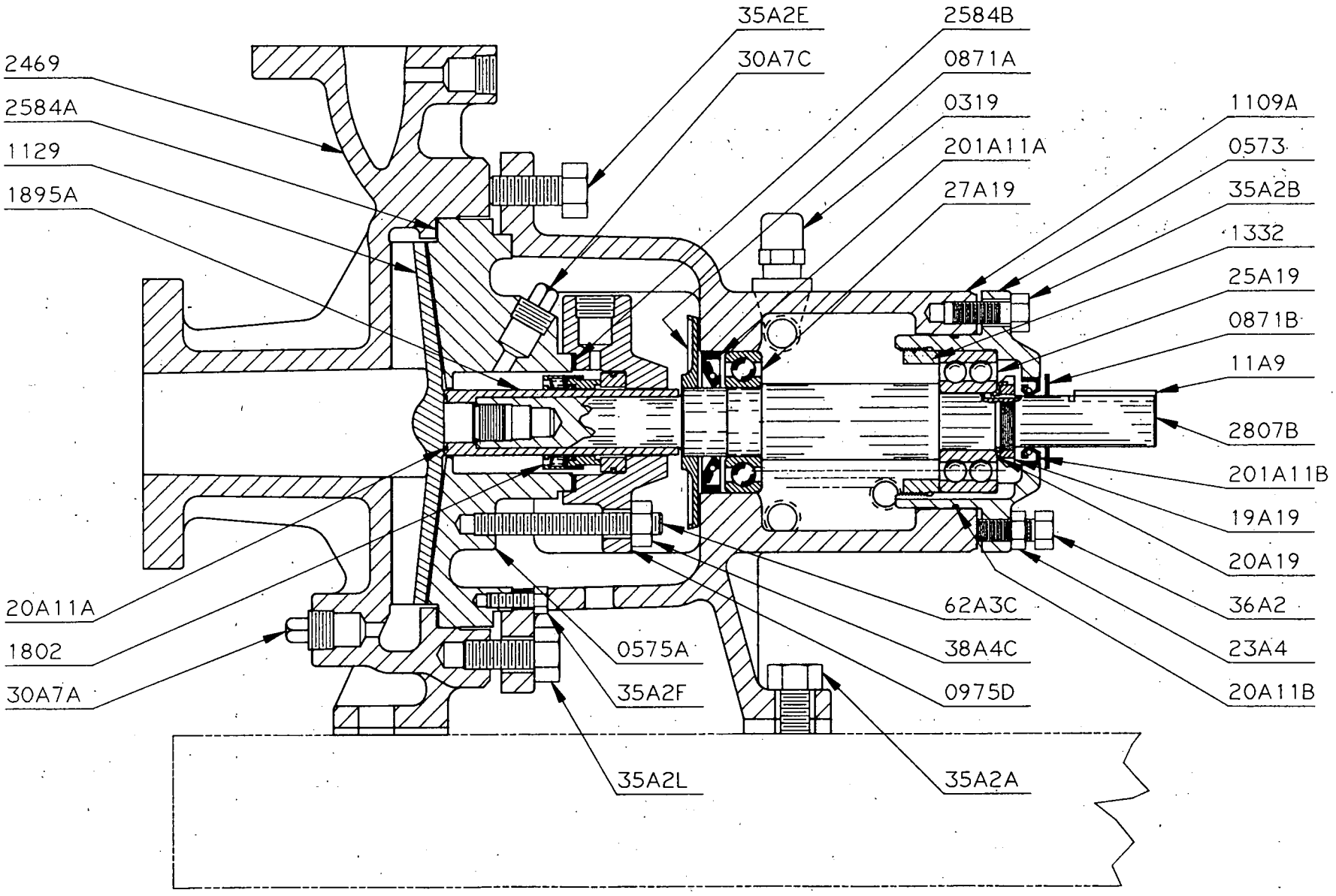

Type HOC2 Pump
1½ × 1 × 8 Cross-Sectional

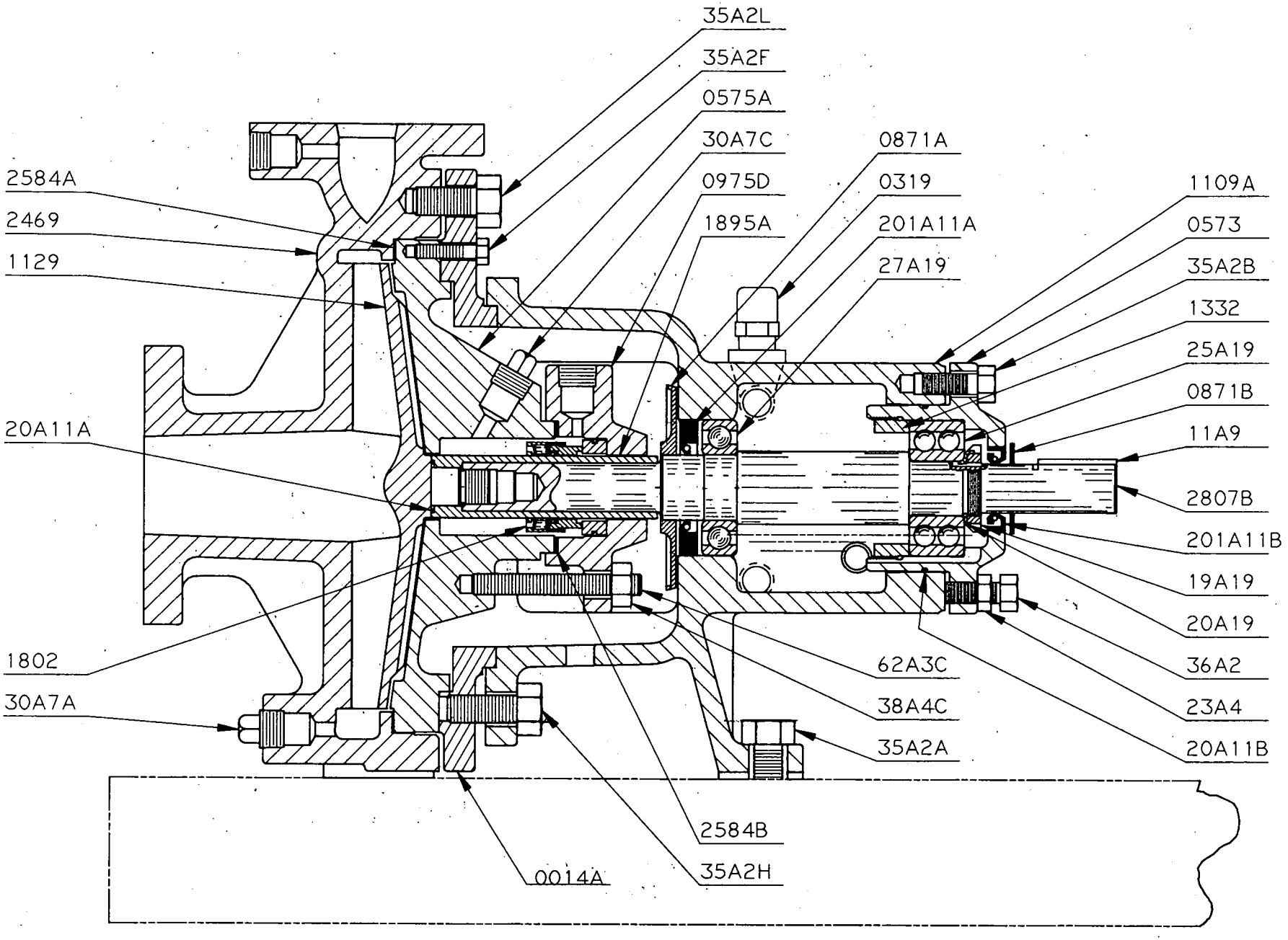

Type HOC2 Pump
Group 2 Cross-Sectional

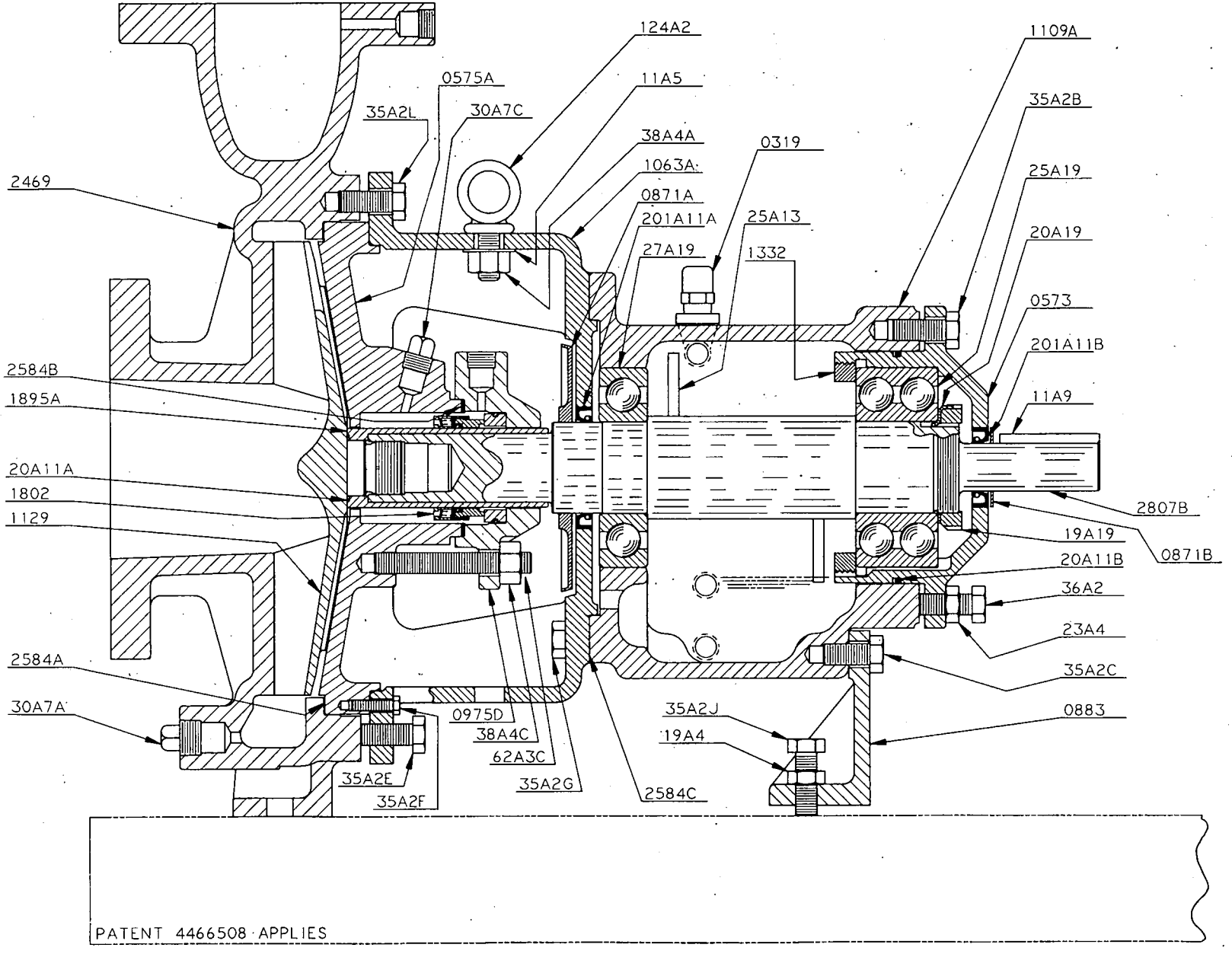

Type HOC2 Pump
6 × 4 × 13 Cross-Secti nal

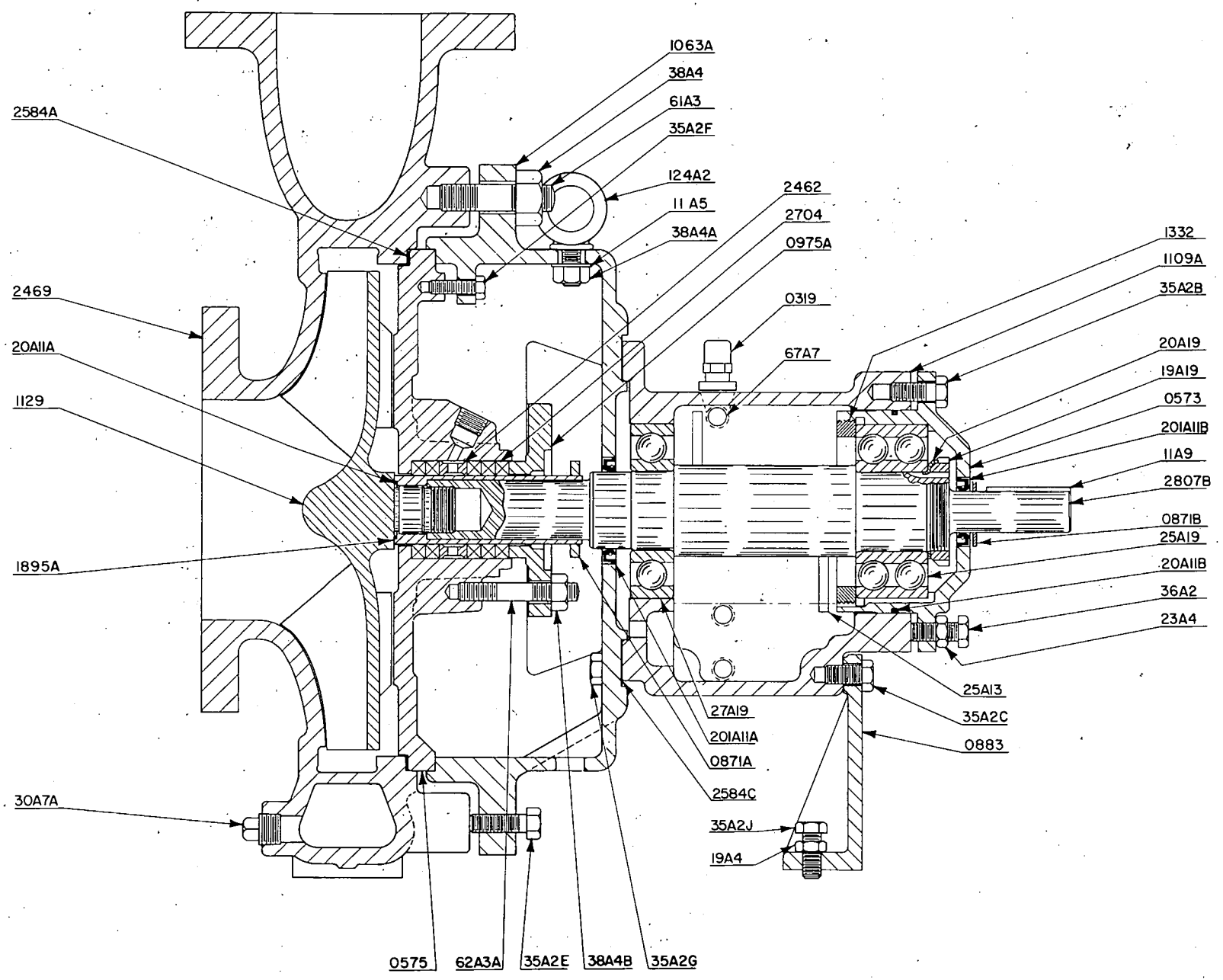

Type HOC2 Pump
Gr up 3 Cross Sectional

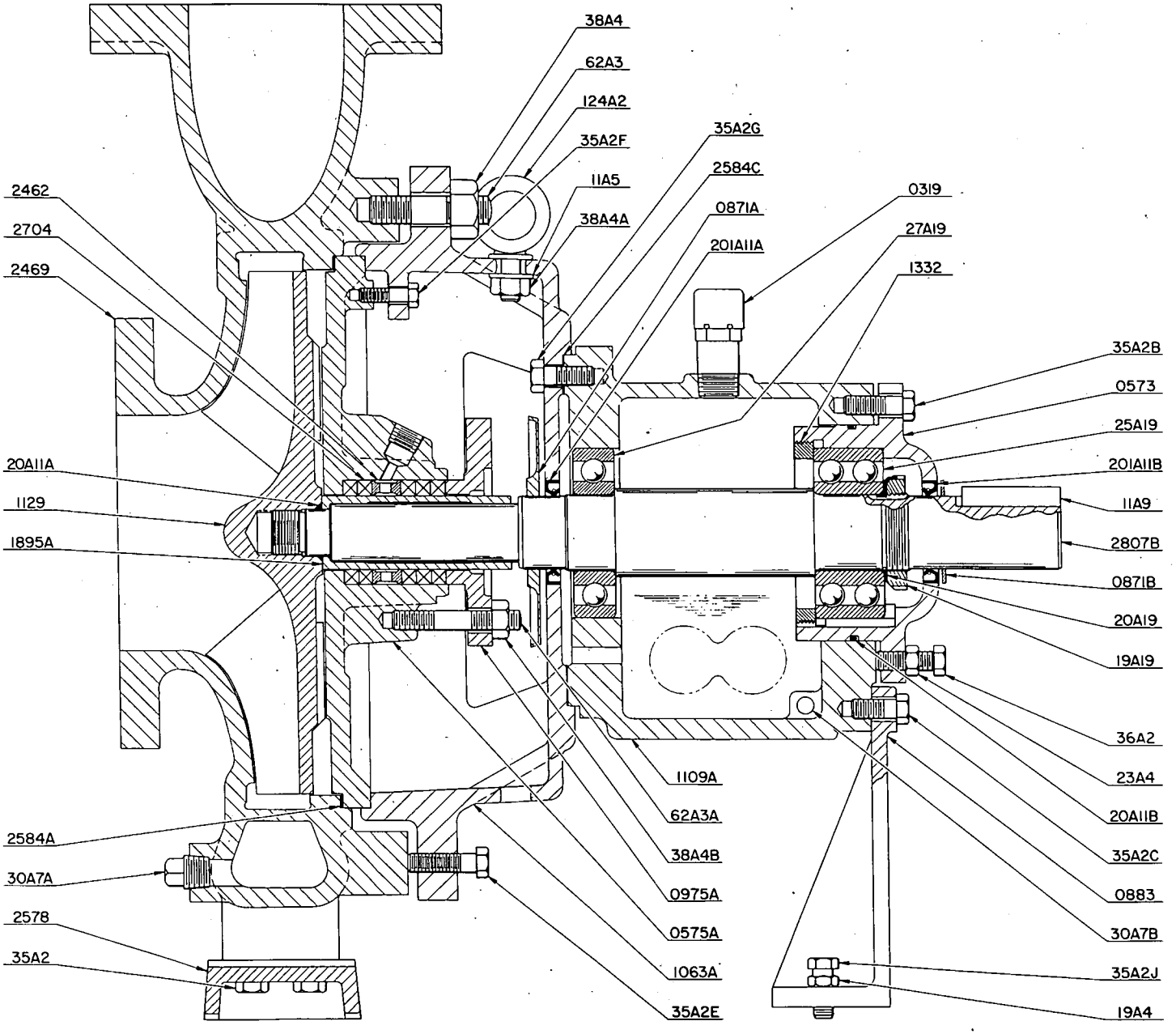

Type HOC2 Pump
Group 1 Exploded Parts Drawing

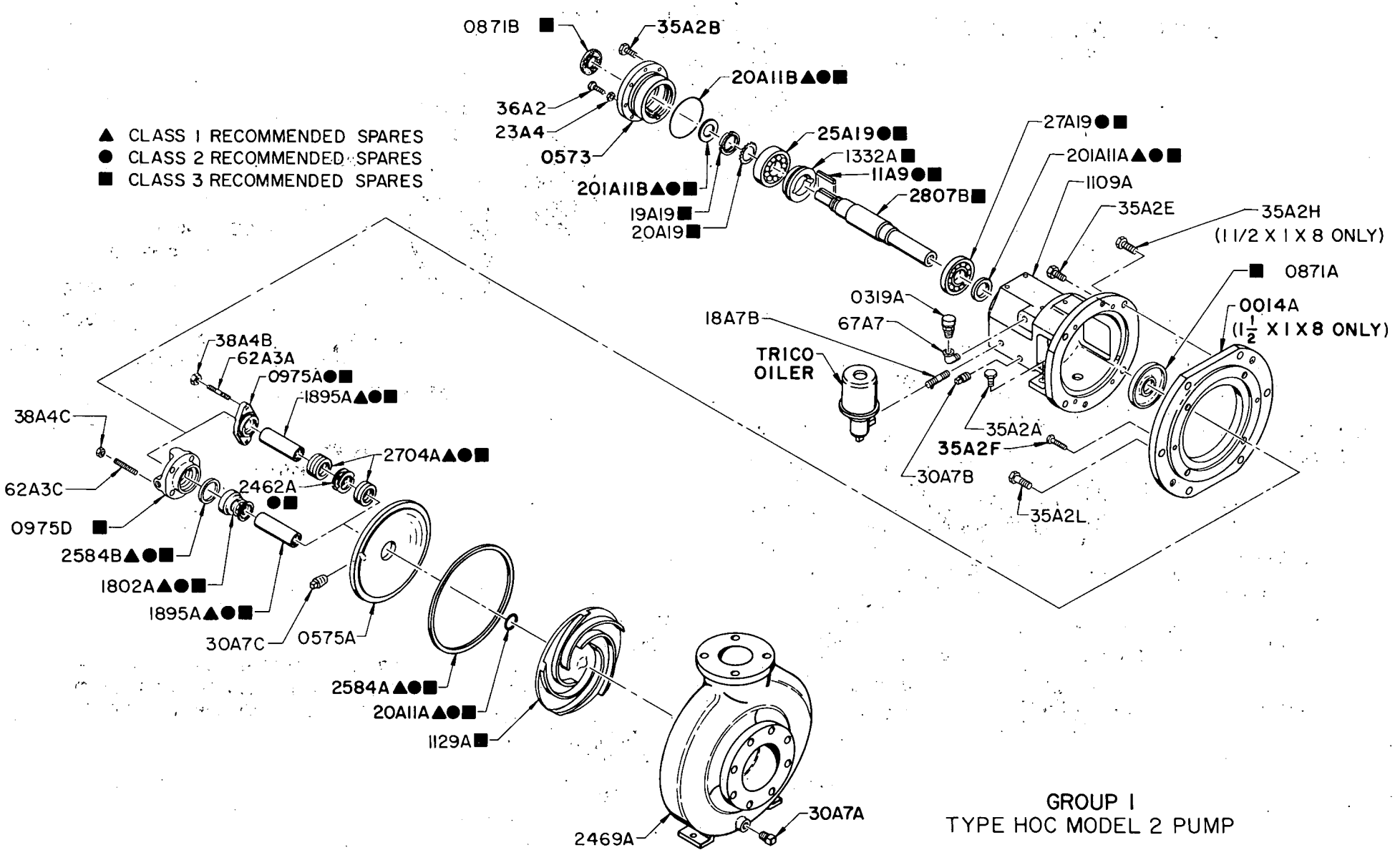

GROUP 1
TYPE HOC MODEL 2 PUMP

Type HOC2 Pump
Group 2 Exploded Parts Drawing

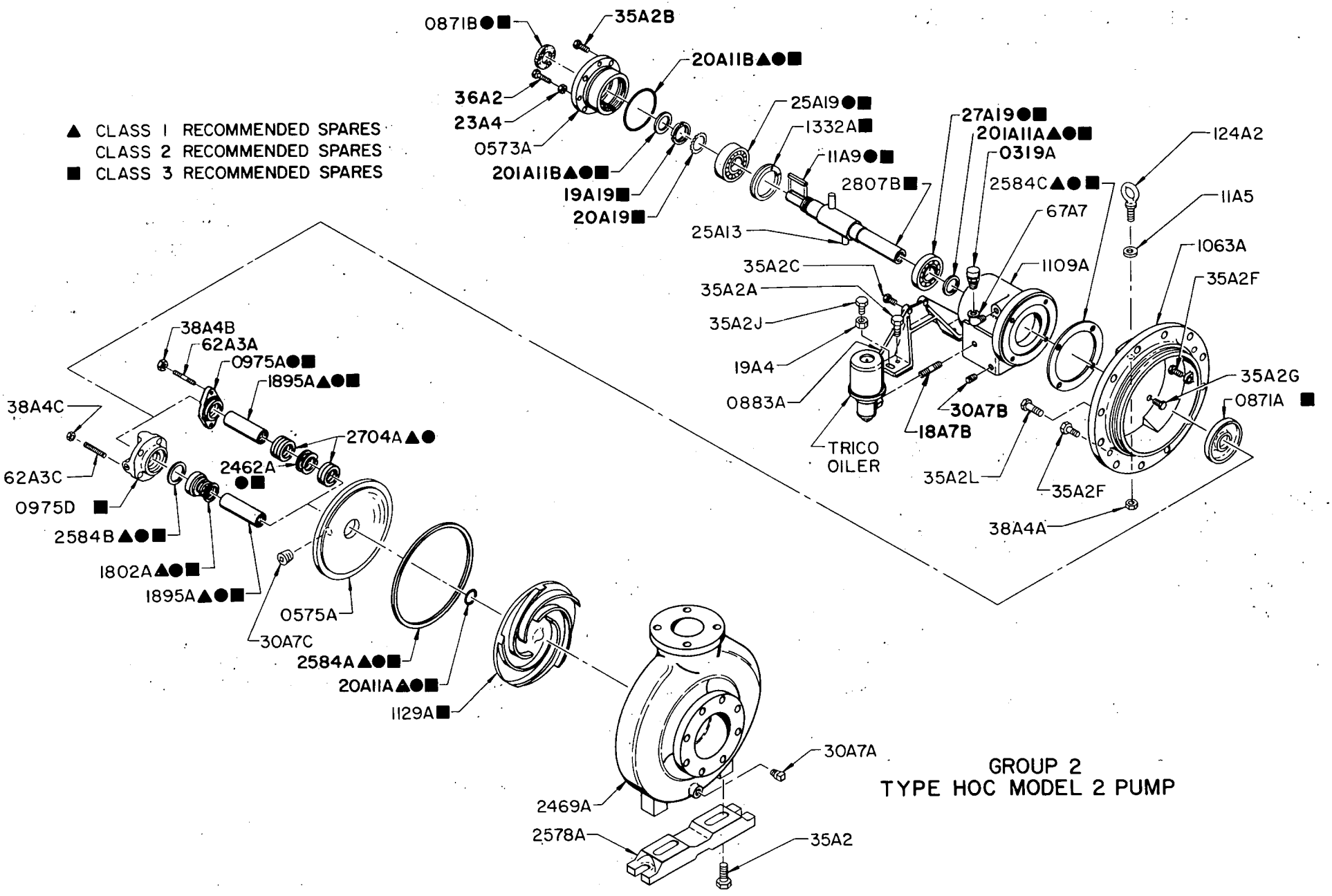

Type HOC2 Pump
Group 3 Exploded Parts Drawing

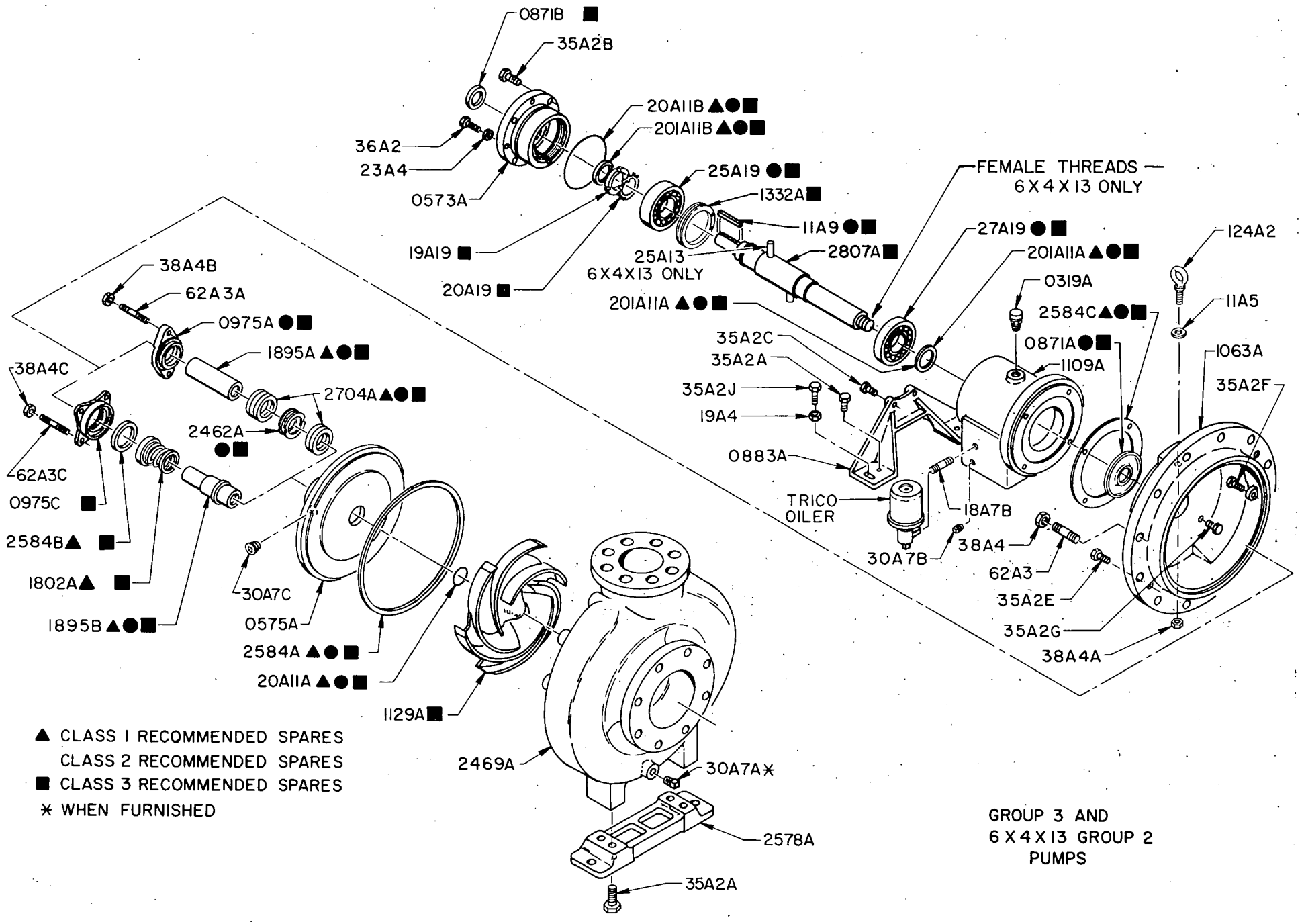

Recommended Spare Parts List

Part Number	Description	Class Spare 1	Class Spare 2	Class Spare 3	Qty. Per Pump
	Pump End				
0975A	Packing Gland		X	X	1
0975B	Packing Gland, Smothering		X	X	1
0975C	Mech Seal Plain Gland		X	X	1
0975D	Mech Seal Flush Gland		X	X	1
0975E	Mech Seal F, Q, & Drain Gland		X	X	1
1129A	Impeller			X	1
1802A/B/C	Mechanical Seal	X	X	X	1
1895A	Shaft Sleeve, for Packed Pump, Unbalanced, & Dbl Seals	X	X	X	1
1895B	Shaft Sleeve, for Balanced Seal w/Plain Gland	X	X	X	1
1895C	Shaft Sleeve, for J.C. Type 1 Seal w/Plain Gland	X	X	X	1
1895D	Shaft Sleeve, for Balanced Seal w/Flush Gland	X	X	X	1
1895E	Shaft Sleeve, for J.C. Type 1 Seal w/Flush or F, Q, & D Gland	X	X	X	1
20A11A	Imp O-Ring	X	X	X	1
2462	Seal Cage		X	X	1
2584A	Casing Gasket	X	X	X	1
2584B	Gland Gasket, Mech Seal only	X	X	X	1
2704	Packing	X	X	X	5 rings
2807A	Pump Shaft, Unsleeved			X	1
2807B	Pump Shaft, Sleeved			X	1
	Bearing Housing Assembly				
0871A	Flinger, Pump End		X	X	1
0871B	Flinger, Coupling End		X	X	1
11A9	Coupling Key		X	X	1
1332	Locknut			X	1
19A19	BRG Lock Nut			X	1
201A11A	Lip Seal, Pump End	X	X	X	1
201A11B	Lip Seal, Coupling End	X	X	X	1
20A11B	BRG End Cover O-Ring	X	X	X	1
20A19	BRG Lock Washer			X	1
2584C	Gasket, BRG HSG-SPT HD	X	X	X	1
2584D	Gasket, Oil Cooler	X	X	X	1
25A19	Thrust BRG		X	X	1
27A19	Radial BRG		X	X	1

Sal s Offic s

Ing r ll-Rand Company—Domestic Sales Locations

Northeast District

Phillipsburg (Headquarters)
P.O. Box 5299
Phillipsburg, NJ 08865-5299
(908) 859-8000

Boston
50 School Street
Walpole, MA 02081
(508) 660-1031

Great Lakes District

Cincinnati
1220 Hill Smith Drive
Cincinnati, OH 45215
(513) 771-6016

Midwest District

Chicago
125 Tubeway
Carol Stream, IL 60188
(708) 668-3707

Southeast District

Atlanta
111 Ingersoll-Rand Drive
Chamblee, GA 30341
(404) 455-6200

Southwest District

Baton Rouge
4152 Rhoda Drive
Baton Rouge, LA 70816
(504) 293-5780

Houston
1251 Lumpkin Road
Houston, TX 77224-9215
(713) 827-8838

Western District

Denver
P.O. Box 7445
5805 E. 39th Avenue
Denver, CO 80207
(303) 399-1580

Los Angeles
5533 E. Olympic Blvd.
Los Angeles, CA 90022
(213) 723-0131

San Francisco
710 South Broadway
Suite 200B
Walnut Creek, CA 94596
(415) 946-1551

Ing r ll-Rand Company—International Sales Locations

Australia
Ingersoll-Rand (Australia) Ltd.
P.O. Box 226
Dandenong 3175
Victoria, Australia
(03) 794-1611

Austria
Ingersoll-Rand GMBH
Schoenbrunner Strasse 213-215
A 1120 Vienna, Austria
(222) 8305250

Canada
Ingersoll-Rand Canada, Inc.
333 11th Avenue, S.W.
Calgary, Alberta T2R 0C7, Canada
(403) 261-8652

3501 St. Charles Blvd.
Kirkland, Quebec H9H 3C4, Canada
(514) 695-9040

2360 Millrace Court
Mississauga, Ontario L5N, 1W2, Canada
(416) 858-8480

Colombia
Marquinarias Ingersoll-Rand
de Colombia, S.A.
Apartado Aereo #7451
Bogota, D.E., Colombia
2-347962

Egypt
Ingersoll-Rand Egypt
P.O. Box 820
Cairo (11511), Egypt
(02) 341-5190
(02) 341-1560

France
Compagnie Ingersoll-Rand
Avenue Albert Einstein
Zone Industrielle 78190
Trappes, France
(3) 050 61 10

Hong Kong
Ingersoll-Rand Far East
19th Floor, Lap Heng House
50 Gloucester Road
Hong Kong
(5) 270183

India
Ingersoll-Rand (India) Ltd.
P.O. Box 9138
Bombay 400 025, India
(022) 4936765

Italy
Ingersoll-Rand Italiana
Casella Postale 1232
20100 Milano, Italy
(02) 950561

Japan
Ingersoll-Rand Japan, Ltd.
Kowa Bldg. No. 17
2-7 Nishi-Azabu 1-Chome
Minato-Ku, Tokyo 106, Japan
(3) 403-0641/7

Korea
Ingersoll-Rand
CPO Box 5123
Seoul 100, Korea
(2) 277-2302/4

Latin America
Latin American Distributor Operations
P.O. Box 5299
Phillipsburg, NJ 08865-5299
(908) 859-8000

Middle East
Ingersoll-Rand Sales Co. Ltd.
Queensway, Team Valley Trading Estate
Gateshead, Tyne & Wear NE11 OQB,
England
0914 875051

Netherlands
Ingersoll-Rand Nederland
P.O. Box 33
2380 AA Zoeterwoude
Netherlands
(071) 452200

Philippines
Ingersoll-Rand Philippines, Inc.
P.O. Box 445 MCC
Makati, Metro Manila 3117
Philippines
(2) 89-85-06/08

Saudi Arabia
Ingersoll-Rand Technical Services
S.A.R.L.
c/o Zahid Tractor &
Heavy Machinery Co. Ltd.
P.O. Box 1717
Alkhobar 31952
Saudi Arabia
(03) 857-0595

Singapore
Ingersoll-Rand
Southeast Asia (PTE) Ltd.
Maxwell Road,
P.O. Box 2062
Singapore 9040
8611555

South Africa
Ingersoll-Rand Co. S.A.
(Proprietary) Ltd.
P.O. Box 3720
Alrode, 1451
South Africa
(011) 864 3930

Spain
CIA Ingersoll-Rand S.A.
Apartado 518
Madrid, Spain
9 (1) 671-07-00
9 (1) 671-07-50

United Kingdom
Ingersoll-Rand Co., Ltd.
Bowater House
Knightsbridge
London SW1X 7LU
England
01 584-5070

Ingersoll-Rand Co., Ltd.
Queensway
Team Valley Trading Estate
Gateshead, Tyne & Wear
England, NE11 0QB
091 4875051

Venezuela
Ingersoll-Rand de Venezuela, S.A.
Apartado 70588
Los Ruices
Caracas, 1071, Venezuela
239-9369

Ingersoll-Rand de Venezuela, S.A.
Apartado 728
Maracaibo, EDO. Zulia
Venezuela
061-912335

6/J1

Manufacturing Locations

England
Ingersoll-Rand Sales Co. Limited
Pumps/Queensway
Team Valley Trading Estate
Gateshead
Tyne & Wear NE11 OQB, England
091-487-5051

United States
Ingersoll-Rand Co.
Standard Pump Division
P.O. Box 656
Allentown, PA 18105
(215) 776-6100

Ingersoll-Rand Co.
Engineered Pump Division
942 Memorial Parkway
Phillipsburg, NJ 08865
(908) 859-7000

Ingersoll-Rand Co.
Vertical Pump Division
1341 West 2nd Street
P.O. Box 668
Hastings, NE 68901
(402) 463-6821

TYPE 30

INSTRUCTION MANUAL

TWO-STAGE INDUSTRIAL AIR COMPRESSOR

Models 7100
3000

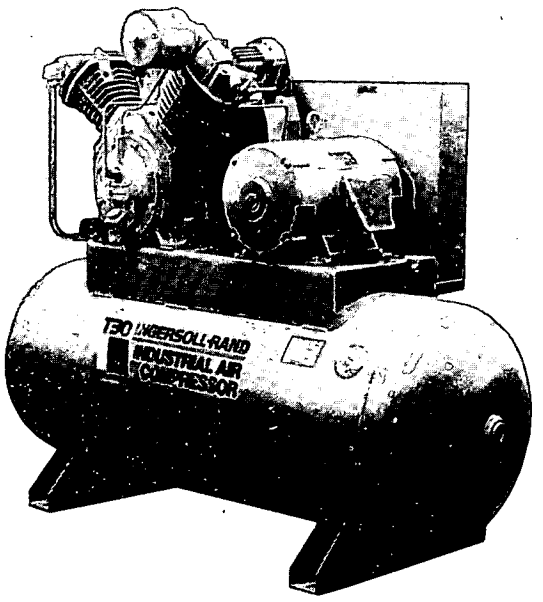

INGERSOLL-RAND®
AIR COMPRESSORS

REFER ALL COMMUNICATIONS TO THE NEAREST INGERSOLL-RAND SERVICE DISTRIBUTOR.

Form SCD-430B
July 1989
Supersedes SCD-430A

⚠WARNING

STATEMENT CONCERNING THE USE OF THIS EQUIPMENT FOR BREATHING AIR AND/OR AQUA LUNG SERVICE.

If the model number on this air compressor contains the letters "BAP", the compressor is suitable for use in breathing air services. In the absence of such a designation, the compressor is NOT considered as capable of producing air of breathing quality. For a compressor to be capable of use in breathing air services, it must be fitted with additional specialized equipment to properly filter and/or purify the air to meet all applicable federal, state and local laws, rules, regulations and codes, such as but not limited to, OSHA 29 CFR 1910.34. Compressed Gas Association Commodity Specifications G-7.1-1966. Grade D Breathing Air, and/or Canadian Standards Association. Should the Purchaser and/or User fail to add such specialized equipment and proceeds to use the compressor for breathing air service, the Purchaser/User assumes all liability resulting therefrom without any responsibility or liability being assumed by Ingersoll-Rand Company.

The Purchaser is urged to include the above provision in any agreement for any resale of this compressor.

Hazardous vapors. Can cause severe nausea, fainting or death.

Compressed air from this air compressor may contain poisonous carbon monoxide.

Certain sprayed material such as paints, insecticides, weed killer, sand, etc., may be harmful if inhaled or used in a closed area.

Never directly inhale the compressed air produced by this air compressor.

Always read labels with containers when spraying paints or poisons.

Always use the compressor in a well ventilated area.

Use a respirator or mask whenever there is a chance that you might inhale anything that you are spraying. If a mask is used, read all the instructions with the mask so that you will know that it will protect you from what you are spraying.

Hazardous voltage. Can cause severe injury or death. (Applies to models powered by electric motors.)

Always disconnect the power supply before doing any maintenance or repair work.

Always connect the power supply to a properly grounded electrical circuit with the specified voltage and fuse protection.

Never use the compressor in the rain, in a wet area or near an explosive atmosphere.

Flammable vapors. Can cause a fire or an explosion, and result in severe injury or death.

Sparks from the motor's electrical contacts can ignite flammable vapors from gasoline, natural gas, or solvents.

Do not operate the air compressor in any areas where explosive or flammable vapors or liquids may exist.

Compressed air has great force.

Over-pressurizing the air receiver can cause the air receiver to rupture or explode, and result in severe injury or death.

Changes to the air receiver structure will cause the air receiver to weaken and can cause the air receiver to rupture or explode, and result in severe injury or death.

Weakening of the air receiver structure caused from internal rusting of the air receiver can cause the air receiver to rupture or explode, and result in severe injury or death.

Air pressure beyond design limits can cause the air receiver to rupture or explode, and result in severe injury or death.

Improper use of air tools or air attachments can cause explosion, and result in severe injury.

The air receiver is protected from over-pressurizing by a safety valve. DO NOT REMOVE, MAKE ADJUSTMENTS, OR SUBSTITUTIONS FOR THIS VALVE. Occasionally pull the ring on the safety valve to make sure that the valve operates freely. If the valve is stuck or does not operate smoothly, it must be replaced.

Never drill into, weld to, or change the air receiver in any manner.

Drain water/condensate from the air receiver daily or before each use.

Pressure switch/unloader valve operation is related to motor/engine horsepower, air receiver rating, and safety valve setting. DO NOT ATTEMPT TO ADJUST, REMOVE, OR BY-PASS THE PRESSURE SWITCH, OR CHANGE AND MODIFY ANY PRESSURE CONTROL RELATED DEVICE

Do not use any air tools or air attachments without determining the maximum air pressure recommended for that particular air tool or air attachment.

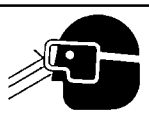

Compressed air. Can propel dirt, sand, metal shaving, etc., and result in severe injury.

Never point any air nozzle or air sprayer toward any part of the body, or toward another person.

Always wear safety glasses or goggles.

Moving parts, can cause severe injury.

The electric motor air compressor models are designed to cycle automatically when the power is ON. During service or repair work, this automatic cycling can cause severe injury.

Always disconnect the power supply on electric motor models before attempting to do any maintenance or repair work to the compressor.

Always disconnect the power supply on electric motor models if the compressor is to be left unattended.

Always make sure that the air pressure is released from the compressor, the air receiver, and all air attachments before doing any maintenance or repair work.

Never operate the compressor with the belt guard assembly removed.

Never operate the compressor with a damaged or broken belt guard assembly.

Hot parts. Air compressors get hot while running, and result in severe burn if touched.

Never touch the bare compressor, the motor/engine, or the discharge tubing during or shortly after operating the compressor.

INDEX

SECTION I

GENERAL DESCRIPTION 4
Application 5
Two-Stage Operation 5

SECTION II

INSTALLATION AND START-UP RECOMMENDATIONS 5-8
Location and Foundation 6
Inlet Piping 6
Electrical 6
Fuses 7
Magnetic Starter 7
Compressor Startup 7
Pressure Regulation 7
Low Oil Level Switch 8
Discharge Piping 8
Complete Warranty Registration 8

SECTION III

REGULATION 9-10
Automatic Start and Stop Control 9
Constant Speed Control 9
Dual Control 9
Pressure Switch Adjustment 9
Auxiliary Valve Adjustment 10
Intermittent Duty Formula 10

SECTION IV

OPERATION 11-13
Operating Checks 11
Compressor Lubrication 11
Frame Oil Change 11
Lubricating Oil Recommendations 11
Motor Lubrication and Care 11
Air Inlet Filter/Silencer 11
Intercooler 12
Safety Valve 12
Starting Unloading System 12
Pilot Valve Adjustment 13
Breather/Unloader By-Pass 13
Interstage Pressure Chart 13
Oil Consumption Check 13

SECTION V

TROUBLE GUIDE 14

SECTION VI

MAINTENANCE 15-17
ROUTINE INSPECTION AND SERVICE 15
General 16
Air Valve Inspection 16
Torque Values 16
Belt Installation and Adjustment 17

SECTION VII

OPTIONAL EQUIPMENT AND ACCESSORIES 18-19
Air-Cooled Aftercoolers 18
Water-Cooled Aftercooler 18
Automatic Water Valve 18
Automatic Drain Trap 19
Air Receiver 19

SECTION VIII

TYPICAL WIRING DIAGRAMS 20

SECTION I
GENERAL DESCRIPTION

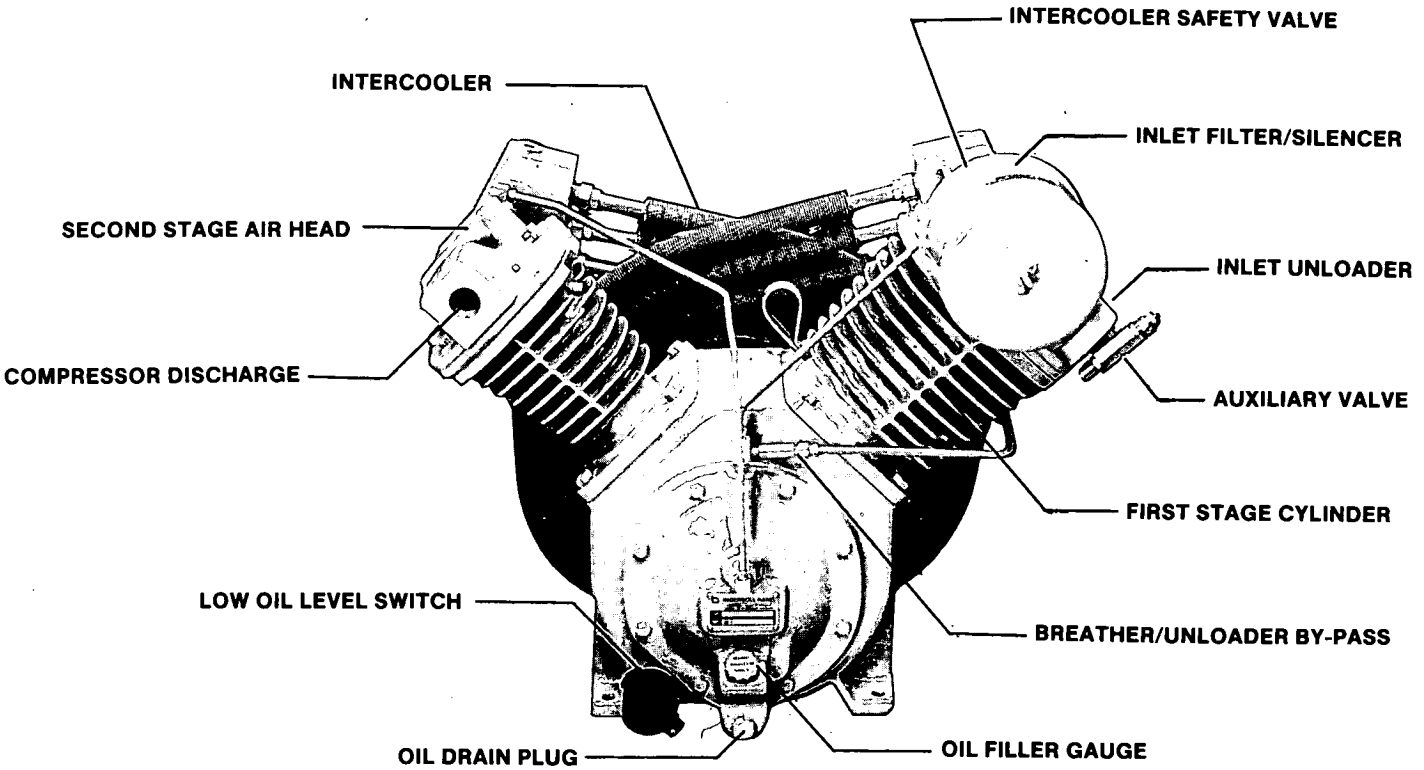

Figure 1-1. Model 7100 Two-stage, two cylinder compressor.

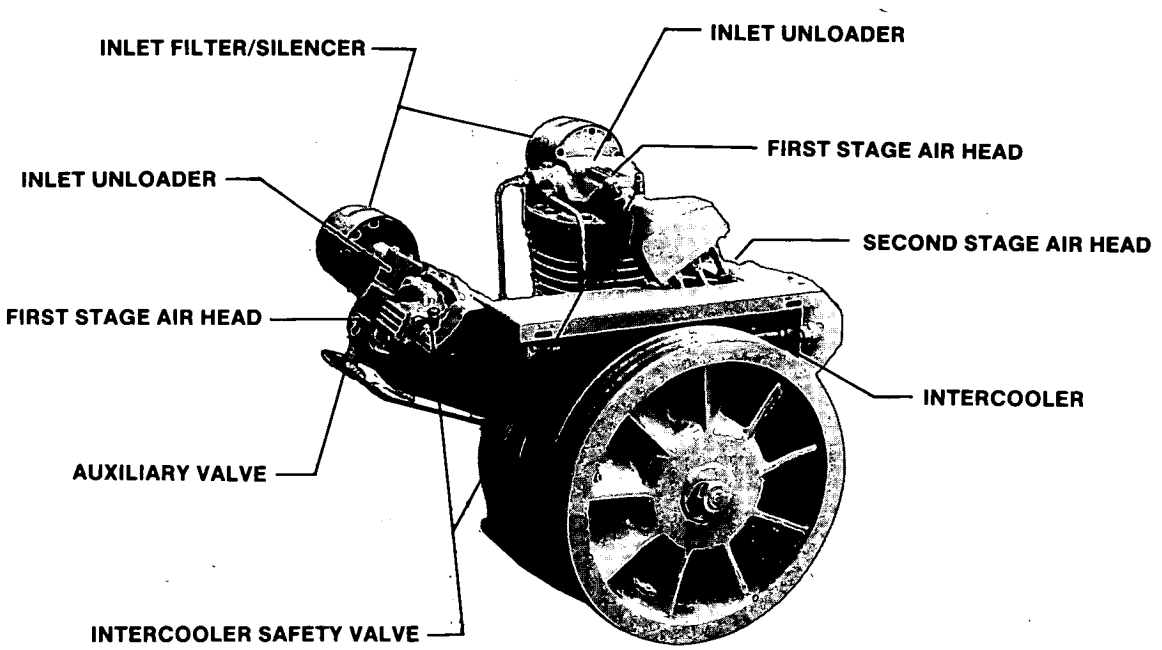

Figure 1-2. Model 3000 Two-stage, three cylinder compressor.

APPLICATION

Ingersoll-Rand's Models 7100 and 3000 are two stage, single-acting, air-cooled compressors that do not require installation on a special foundation. They can be furnished as compact, self-contained, receiver mounted compressors, automatically regulated and driven by an electric motor. An air-cooled aftercooler along with an automatic condensate drain trap can be furnished as optional equipment. They are also sold as a bare or baseplate-mounted compressor.

These compressors may be used for any compressed air application requiring minimum air pressure of 50 PSIG (3.5 kg/cm^2) with the maximum pressure rating for the MODEL 7100 being 250 PSIG (17.5 kg/cm^2), and with the maximum pressure rating for the MODEL 3000 being 200 PSIG (14.0 kg/cm^2).

Application for the Models 7100 or 3000 as either a primary or supplementary source of air is virtually unlimited in industrial plants, service stations and auto repair shops. Supplementary service includes such uses as furnishing air at pressure not carried in regular shop lines, air at isolated locations, standby service for air when larger compressors are shut down.

In addition to the many advantages offered by compact, aircooled construction, moderate compressor speeds, large-area plate valves, solid-end connecting rods and positive-acting starting unloading provide long-life dependability. These compressors are equipped with highly efficient intercooler tubes that provide maximum heat dissipation between stages of compression, resulting in more air per horsepower and less trouble from oil carbonization. Simplified design permits rapid access to any part of the unit for inspection or replacement of parts.

TWO-STAGE OPERATION

The Model 7100 and Model 3000 are two-stage machines consisting of one or two first-stage cylinders with the same bore size and one second-stage cylinder with a smaller bore size.

This basic principle of operation of these two-stage compressors are as follows: On the suction stroke of the first-stage piston(s), air at atmospheric pressure enters the cylinders through the inlet filter(s) and then the inlet valves located in the airhead. On the compression stroke of the first-stage piston(s), the air is compressed to an intermediate pressure and discharged through the discharge valves(s) into common manifold(s). From the manifold(s) the air passes through the intercooler tubes, where the heat of first-stage compression is removed by the action of the fan passing cool air over the intercooler tubes. On the suction stroke of the second-stage piston this cooled air enters the second-stage cylinder through the inlet valve. The compression stroke of the second-stage piston compresses the air to the final discharge pressure and forces it out through the discharge valve into the receiver or system. If cooling of the discharge air is required, an air-cooled aftercooler should be installed between the compressor discharge and the receiver or system.

For maintaining the receiver, or system, air pressure within predetermined limits, the compressor may be operated with one of two types of regulation. The type of regulation used depends upon the application. (See page 9 for a description of the regulation types).

Loadless starting is accomplished by the action of the centrifugal unloader operating a pilot valve which opens a line from the compressor second-stage inlet manifold to atmosphere. (See page 12 for description of Starting Unloading).

SECTION II
INSTALLATION AND START-UP RECOMMENDATIONS

Step 1.

Unload the compressor from delivering vehicle — the purchaser must arrange for adequate lifting equipment at the job site.

IMPORTANT NOTE: The purchaser assumes title to the compressor equipment at the manufacturers shipping dock. Immediately upon receipt of the equipment, it should be inspected for any damage that may have occurred during shipment. If damage is present, demand an inspection immediately by an inspector from the carrier. Ask him how to file a claim for damages.

Step 2.

Check compressor nameplate to be sure the unit is the model and size ordered. Do this before uncrating. Check Receiver Nameplate to be sure the tank is adequate for pressure at which you intend to operate.

Step 3.

Check motor nameplate to be sure motor is suitable for your electrical conditions (Volts-Phase-Hertz).

IMPORTANT NOTE: Do Not Use Triple Voltage 3 Phase Motor For 200-208 Voltage 3 Phase Application. Must Use 200 Volt Motor Only.

Step 4.
LOCATION & FOUNDATION

NOTE: Ideal ambient temperature is (70°F) (21°C).

In cold climates, it is desirable to install the compressor within a heated building. Choose a clean, relatively cool location, and provide ample space around the unit for cooling and general accessibility. Place the beltwheel side toward the wall, leaving at least 15" (380mm) for air circulation to the beltwheel fan. The location should also be near a source of water and a drain line to simplify piping connections if a water-cooled aftercooler is to be used. (Note: If a detached receiver is to be used, consider placing the receiver outdoors to provide more effective heat dissipation, keeping in mind that condensed water in the receiver may freeze).

Provide adequate fresh air and exhaust ventilation from area in which the compressor is located. Provide 1,000 cu. ft. fresh air per minute per 5 horsepower. Ventilation by gravity or mechanical means is approved.

INLET PIPING

If the air in the vicinity of the compressor is unduly dirty or contains corrosive fumes, we recommend piping the air filter/silencer to a source of cleaner air or use an optional heavy duty filter. If it is found necessary to install inlet piping, make the line as short and direct as possible and as large, or larger than the diameter of the inlet connection at the compressor. The inlet piping must increase in diameter for every 50' (15.25m) of length. If the total length is between 50' (15.25m) and 100' (30.5m), increase the pipe diameter at the mid-point in the length, i.e., if the total length is 80' (24.4m), increase the pipe diameter at the 40' (12.2m) point. Attach the air cleaner to the end of the inlet air line, and if the inlet is piped outdoors, it should be hooded to prevent the entrance of rain or snow. See Figure 2-1. Fine airborne dust, such as cement and rock dust, require special filtration equipment not furnished as standard equipment on this compressor. Such filtration equipment is available from your local Ingersoll-Rand Distributor.

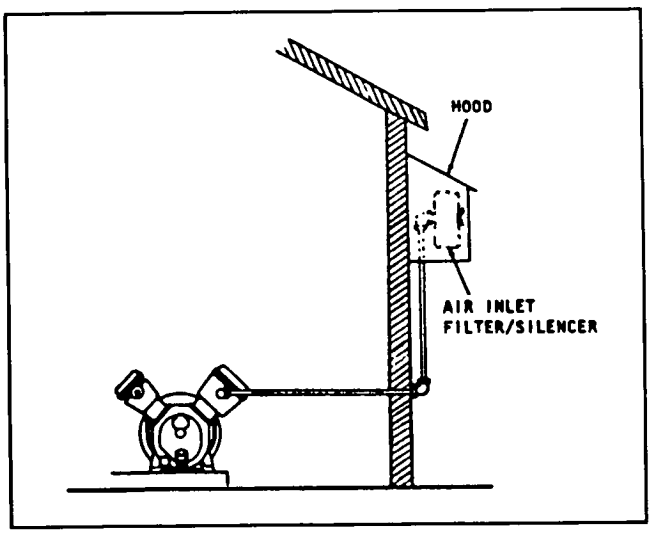

Figure 2-1. Inlet piping arrangement.

A well ventilated location should be selected for this machine when operating in very damp climates or under conditions of high humidity. These atmospheric conditions are conducive to the formation of water in the crankcase, and if adequate operation and ventilation are not provided, rusting, oil sludging and rapid wear of running parts will result. This is particularly true when operating on very intermittent duty applications.

The unit may be bolted to any substantial, relatively level floor or base. If such a surface is not available, an adequate base must be constructed. Should a concrete base be necessary, make certain the foundation bolts are positioned correctly to accept the receiver feet, and that these bolts project at least 1" (25.4 mm) above the surface of the foundation.

The unit must be levelled and bolted in a manner which avoids pre-stressing the receiver in order to prevent vibration and insure proper operation. The following technique is recommended for anchoring this unit:

A. Tighten evenly, and to a moderate torque, the nuts of any three of the four receiver feet. Check the unit for level. If the unit is not level, insert metal shims, as shown in Figure 2-2, under one or two of the feet to obtain level, and retighten the nuts.

B. Note the distance the unanchored foot is elevated above the base and insert a metal shim of equal thickness under this foot to provide firm support. Shims must be at minimum the same dimension as bottom of foot.

C. After all shims are inserted and the unit is level, pull up the nuts on all receiver feet to a moderate (not excessively tight) torque.

D. Check for receiver stress by loosing nuts (one at a time), and note any upward movement of the mounting foot. Any noticeable movement indicates that step B must be repeated.

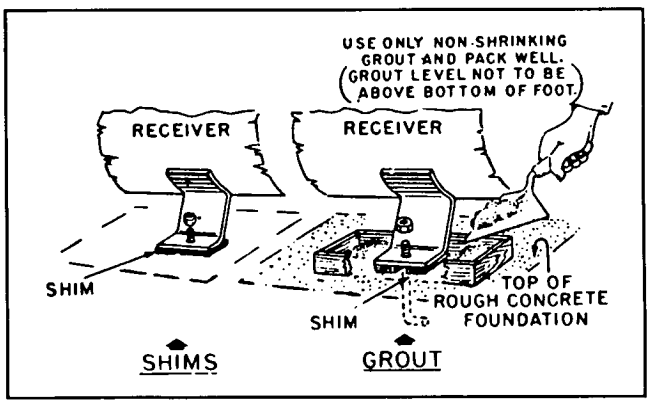

Figure 2-2. Methods of Leveling Unit.

Severe vibration will result when nuts are pulled down tightly and feet are not level. This can lead to welds cracking or fatigue failure of receiver. This is a very important part of installation.

THE COMPRESSOR SHOULD NEVER BE OPERATED WHILE MOUNTED TO THE SHIPPING CRATE SKID.

Step. 5
ELECTRICAL

(See Electrical Diagrams On Page 20).

To avoid invalidating your fire insurance, it is advisable to have the electrical work done by a licensed electrician who is familiar with the regulations of the National Electrical Code and the requirements of the local code.

Sizes of copper wire to use for distances up to 50 feet (15.3 m) from the feeder—60 Hertz.

MOTOR HORSEPOWER	THREE PHASE			
	200V AWG—(75°C)	230V AWG—(75°C)	460V AWG—(75°C)	575V AWG—(75°C)
10	8	8	12	14
15	4	6	10	10
20	3	4	8	10
25	1	2	6	8
30	0	1	6	8

Sizes of copper wire to use for distances up to 50 feet (15.3 m) from the feeder—50 Hertz.

MOTOR HORSEPOWER	THREE PHASE			
	200V AWG—(75°C)	230V AWG—(75°C)	460V AWG—(75°C)	575V AWG—(75°C)
10	4	6	10	10
15	3	4	8	10
20	1	2	6	8
25	0	1	6	8
30	0	0	4	6

The wire sizes recommended in the above table are suitable for the compressor unit. If other electrical equipment is connected to the same circuit, the total electrical load must be considered in selecting the proper wire sizes. A burned out motor due to low voltage may result unless it is properly protected.

Before wiring the compressor to the power supply, the electrical rating of the motor, as shown on the motor nameplate, must be checked against the electrical supply. If they are not the same, do not connect the motor.

It is important that the wire used be the proper size and all connections secured mechanically and electrically. The size of the wire shown in the table above is a safe guide.

If the distance is more than 100 feet (30.5 m), larger wire will probably be necessary and your electrical contractor or local electric company should be consulted for recommendations. The use of too small wire results in sluggish operation, unnecessary tripping of the overload relays or blown fuses.

FUSES

Fuse failure usually results from the use of fuses of insufficient capacity. If fuses are the correct size and still fail, check for conditions that cause local heating, such as bent, weak or corroded fuse clips. Refer to the table below for recommendations on the proper fuse size to be used. Also refer to the regulations of the National Electrical Code and requirements of the local code.

DUAL ELEMENT FUSE SIZE—60 HERTZ
UL CLASS RK-5 600V

MOTOR HORSEPOWER	VOLTAGE			
	THREE PHASE			
	200	230	460	575
10	50	45	25	17.5
15	80	70	35	25
20	100	90	45	35
25	125	110	60	45
30	150	125	70	50

DUAL ELEMENT FUSE SIZE—50 HERTZ
UL CLASS RK-5 600V

MOTOR HORSEPOWER	VOLTAGE			
	THREE PHASE			
	190	220	380	440
10	80	70	35	25
15	100	90	45	35
20	125	100	50	45
25	150	125	70	50
30	175	150	90	70

MAGNETIC STARTER

(See Electrical Diagrams On Page 20).

This compressor must be equipped with a magnetic starter. Note-that the Pressure Switch, the Oil Level Switch and the On-Off Switch are wired to the operating coil of the magnetic starter and serves to interrupt current flow to the motor.

All starters must include thermal overload protection to prevent possible motor damage from overloading. These starters are furnished with the manufacturer's instructions for installation. Ingersoll-Rand cannot accept responsibility for damages arising from failure to provide adequate motor protection.

Duplex Models may be equipped with alternating control circuits for equalizing operation of both compressors.

Step 6.
COMPRESSOR STARTUP

Do not connect the compressor piping to your system at this time.

(A) Fill the crankcase to the proper level with the correct grade of lubricating oil. Use only petroleum based oil for the initial start-up. (See Page 11 for Lubrication Specifications.) Tighten the oil plug. HAND TIGHTEN ONLY.

(B) Check compressor rotation by flicking "Start-Stop" switch. Rotation is shown by arrow on belt guard back. If rotation is incorrect, interchange two of the three leads on the three phase motors.

(C) Prime the condensate trap if supplied on your compressor. (See Page 18 for Priming instructions.) A floor drain should be provided in a nearby location for condensate drainage. A floor drain is desirable whether the compressor is equipped with an automatic condensate trap or not. All compressors will have water condensate in the air receiver.

Your compressor should now be ready for the initial startup and checks. Close the service valve and start the compressor.

Step 7.
PRESSURE REGULATION

Allow the air receiver to build up to pressure for which you ordered the machine. At this pressure, the pressure switch should cause the unit to stop. Open the service valve and/or drain valve to let pressure in the receiver drop. Note-the pressure at which the compressor starts/reloads. If the unit does not Start and Stop/Load and Unload at the correct pressure, you may need to adjust, the Pressure Switch/Auxiliary Valve. (See section III, Regulation, if adjustments are necessary).

Run the compressor for about 10 minutes by bleeding air from the receiver to let the unit warm up and observe for excess vibration or any unusual noise. While the compressor is running, pull ring on all safety valves to be sure they relieve and reseat properly. Do this several times. Retorque all head bolts to 75 Ft. Lbs. (101 Nm.).

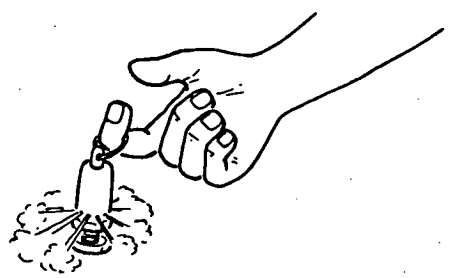

IF YOUR COMPRESSOR DOES NOT OPERATE PROPERLY, SHUT-DOWN IMMEDIATELY, AND CALL YOUR LOCAL INGERSOLL-RAND DISTRIBUTOR.

Step 8.
LOW OIL LEVEL SWITCH

A float activated switch is installed to protect your compressor against damage due to insufficient oil level. The switch operates on a fail-safe principle and is mechanically actuated for sealed, friction-less operation. Low oil level in the frames causes the switch contacts to open, thus shutting the unit down until the proper oil level has been restored.

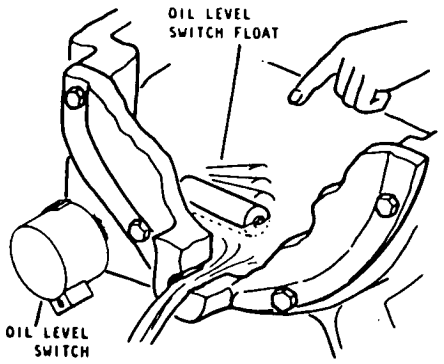

The Low Oil Level Switch is a single pole, double throw snap switch, available with a NEMA 1 enclosure. (An optional NEMA 7 enclosure is available). (See Wiring Diagram on Page 24 for connection of the Low Oil Level Switch.)

NEMA 1 ENCLOSURE: This switch has a maximum rating of 5 amps at 125,250 or 480 volt operation and uses a ⅜" nominal size flexible steel conduit, of a length as required, over the switch lead wires. The switch is not acceptable for greater than 480 volts.

(Optional) NEMA 7 ENCLOSURE: This switch has a maximum rating of 4 amps at 250 volt operation and is equipped with a ½" NPT non-removable fitting.

⚠WARNING

Hazardous voltage.

Connecting pressure switch or low oil level switch directly to motor can cause severe injury or death.

Always insure the pressure switch or low oil level switch is connected thru the control circuit of a magnetic starter.

Proper protection against low oil levels depends on proper adjustment of the low oil level switch.

During the initial run, stop unit and drain one quart of oil from crankcase into clean can, and listen for switch to click or check with continuity tester.

This is a "float" type switch which sometimes gets cocked in shipping. If cocked or stuck, open disconnect switch, drain remaining oil, remove crankcase cover and then free the float. Reassemble and then reuse the same oil.

NOTE: If float is cocked in the low position, compressor cannot start.

Step 9
DISCHARGE PIPING

The following general instructions cover only the installation of discharge piping and placement of safety valves, pressure switch, pressure gauge, auxiliary valve, drain valves, shut-off valves, etc. in systems using a detached receiver. See Figure 2-3. Discharge piping should be the same size as the compressor discharge connection or the receiver discharge connection. All pipe and fittings must be certified safe for the pressures involved. Pipe thread sealant is to be used on all threads, and all joints are to be made up tightly, since small leaks in the discharge system are the largest single cause of high operating costs. If your compressor runs more than you believe it should, the most likely cause is a leaky pipe line. Leaks are easily located by squirting soap and water solution around the joints and watching for bubbles.

When a baseplate mounted unit or a bare compressor is supplied, it is very important to observe the following points when installing the piping between the compressor and the receiver.

⚠WARNING

This machine contains high pressure air. Can cause injury or death from flying parts.

If an aftercooler, check valve, block valve, or any other restriction is added to the compressor discharge, an ASME approved safety valve must be installed between the compressor discharge and the restriction.

1. If possible, run the piping down from the compressor discharge to permit the condensate to drain into the receiver. If this is not possible, Install a "drain leg" as shown in Figure 2-3. The drain leg should project down from the compressor discharge and be at least 10" (254 mm) long.

2. Put a drain valve at the end of this pipe and drain at least weekly, or as often as necessary.

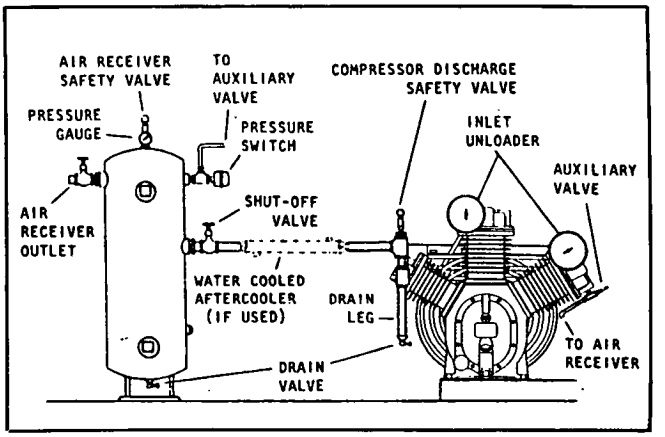

Figure 2-3. Typical piping arrangement for compressor and detached receiver.

The length of the tube line connectig the auxiliary valve will have a bearing on the operation of the regulation system. For lengths up to 12 feet (3.6 m), use 5/16 O.D. copper tubing that has been certified safe for the pressures involved. For lengths over 12 feet (3.6 m), use the next larger size copper tubing that is certified safe for pressures involved, or contact your nearest I-R distributor.

Step 10.
COMPLETE WARRANTY REGISTRATION

Completion of the registration form indicates satisfactory installation and performance of start-up operations. If any defects are apparent in the equipment; contact the nearest I-R Distributor or Ingersoll-Rand District office. The I-R service literature included with the unit has instructions for minor adjustments. Minor adjustments are not considered warranty.

SECTION III
REGULATION

TYPES OF REGULATION
(See Wiring Diagrams on Page 20).

The Model 7100 and 3000 Package Compressors are supplied with Dual Control Regulation, and the Model 7100 and 3000 Bare Compressors are supplied with Constant Speed Control Regulation.

Dual Control is accomplished by a combination of Auto-Start-And-Stop Control Regulation which consists of a pressure switch that makes or breaks the electrical contacts to the motor at a predetermined pressure setting, and Constant Speed Control Regulation which unloads the compressor at a predetermined pressure setting while the motor continues to run.

AUTOMATIC START AND STOP CONTROL

This type of regulation is used when the demand for air is small or intermittent, but where pressure must be continuously maintained.

Automatic Start and Stop Control is obtained by means of a pressure switch which makes or breaks an electrical circuit, starting and stopping the driving motor, thereby maintaining the air receiver pressure within definite limits. The pressure switch is piped to the receiver and is actuated by changes in air receiver pressure.

Automatic Start and Stop should only be used when motor starts no more than 6-8 times per hour.

CONSTANT SPEED CONTROL

This type of regulation is used when the demand for air is practically constant at the capacity of the compressor.

Constant Speed Control is obtained by means of an auxiliary valve that controls the operation of the Inlet Unloaders, thereby loading and unloading the compressor in accordance with air receiver pressure. This action maintains receiver pressure within definite limits while the compressor continues to operate.

The auxiliary valve is piped directly to the receiver (See Figure 3-4).

When receiver pressure reaches the pre-set unload pressure the auxiliary valve actuates and compressed air from the receiver activates the inlet unloader piston. This compressed air forces the unloader piston against the intake air seat in the unloader which blocks the flow of intake air, through the filter/silencer. When receiver pressure falls to the pre-set load pressure, the auxiliary valve closes, shutting off pressure to the unloader. With receiver pressure removed from the unloader, vacuum within the inlet port retracts the piston. The air inlet opens and the compressor reloads.

DUAL CONTROL

Dual Control is accomplished by adjusting the lockout knob on the top of the auxiliary valve. See Figure 3-3. For constant speed operation, turn the knob counterclockwise until fully open. This adjustment will allow the valve to function. Turning the knob clockwise locks-out operation of the auxiliary valve. Note-the pressure gauge reading at which the compressor cuts-out and re-establish this point if necessary.

For proper dual control operation, the cut-out setting of the pressure switch must be at least 5 PSIG (.35 kg/cm^2) greater than the cut-out pressure of the auxiliary valve.

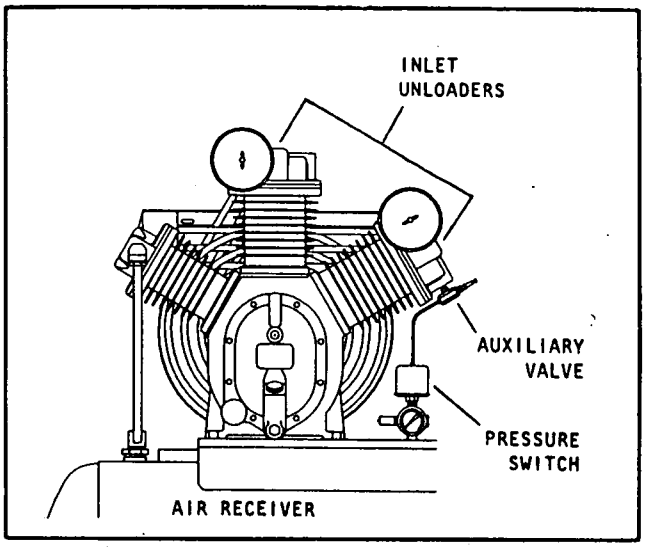

Figure 3-1 Typical Dual Control arrangement.

PRESSURE SWITCH ADJUSTMENT

The pressure switch has a Range Adjustment and a Differential Adjustment. See Figure 3-2. The Cut-out (Compressor Shutdown) is the pressure at which the switch contacts open, and the Cut-in (Compressor Restart) is the pressure at which the switch contacts close.

The cut-out point may be increased by screwing the range adjustment clockwise. Screwing the range adjustment counterclockwise decreases the cut-out point. Note the pressure gauge reading at which the compressor cuts-in and out and re-establish pressure setting if necessary.

The differential pressure may be increased by screwing the differential adjustment clockwise. Backing off the differential adjustment will narrow the span. It is advisable to have as wide a differential as possible to avoid frequent starting and stopping of the compressor. Note the pressure gauge reading at which the compressors cuts-out and re-establish this point if necessary.

There is interaction between these two adjustments, i.e., if the cut-out is increased, the differential will also increase, or if the differential is narrowed, the cut-out will be reduced, etc. These factors must be considered when adjusting the switch and compensate for accordingly.

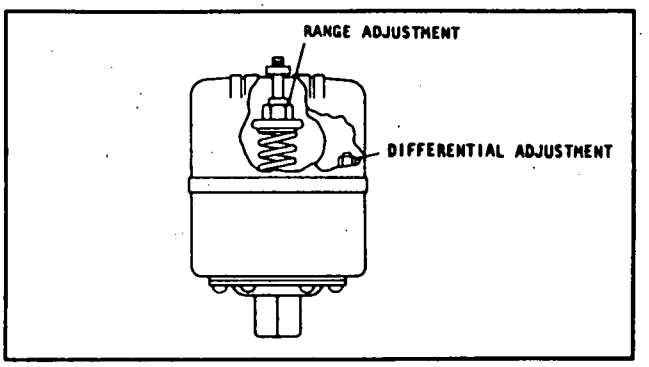

Figure 3-2. Typical pressure switch cut-in and cut-out adjustment.

AUXILIARY VALVE ADJUSTMENT

The auxiliary valve is mounted on the bare compressor. The valve has a cut-out and a differential adjustment. The cut-out point is the pressure at which the valve will open allowing the compressor to unload, the cut-in point is the pressure at which the valve will close allowing the compressor to reload, and the differential is the span between the cut-out and the cut-in points.

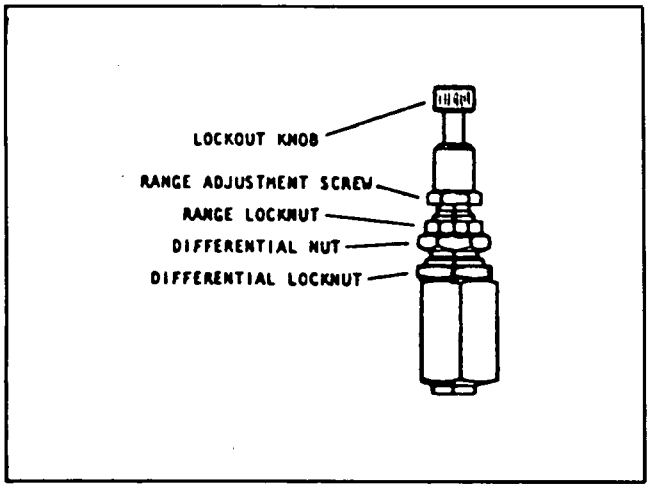

Figure 3-3. Typical Auxiliary Valve adjustments.

To adjust the cut-out pressure, (See Figure 3-3,) loosen the range locknut and turn the range adjustment screw clockwise for higher pressure and counterclockwise for lower pressure. Retighten the range locknut after adjusting the cut-out pressure.

The differential pressure will vary with the change in cut-out pressure.

The differential pressure is preset at approximately 15% of the cut-out pressure and should not be re-adjusted unless absolutely necessary. Small differentials, 5 PSIG or less, tends to produce internal chattering and should be avoided.

To adjust the differential pressure, (See Figure 3-3), loosen the differential locknut and turn the differential nut clockwise for greater differential and counterclockwise for less differential. While adjusting the differential nut, the range locknut should be loosened and the range adjustment screw must be held from turning to avoid changing the cut-out pressure. Retighten the differential locknut and the range locknut after adjusting the differential pressure.

INTERMITTENT DUTY FORMULA

Model 7100 operating above 200 psig (14 kg/sq. cm) are to be operated according to the "Intermittent Duty Formula."

INTERMITTENT DUTY FORMULA

Pump-up time should not ordinarily exceed thirty (30) minutes or be less than ten (10) minutes. Shut-down periods between cycles of operation sh uld be at least equal to the pump-up time. Note: When the compressor is regulated by constant speed control, the shut-down period is the time the compressor is operating unloaded.

A pump-up time limit with the following cool-down period is recommended to protect the valves and heads against stabilized high operating temperatures, which could rapidly build up carbon in these areas.

All inquiries for high-pressure compressor application where the "use" cycle differs from the "Intermittent Duty Formula" should be referred to the nearest Ingersoll-Rand branch office.

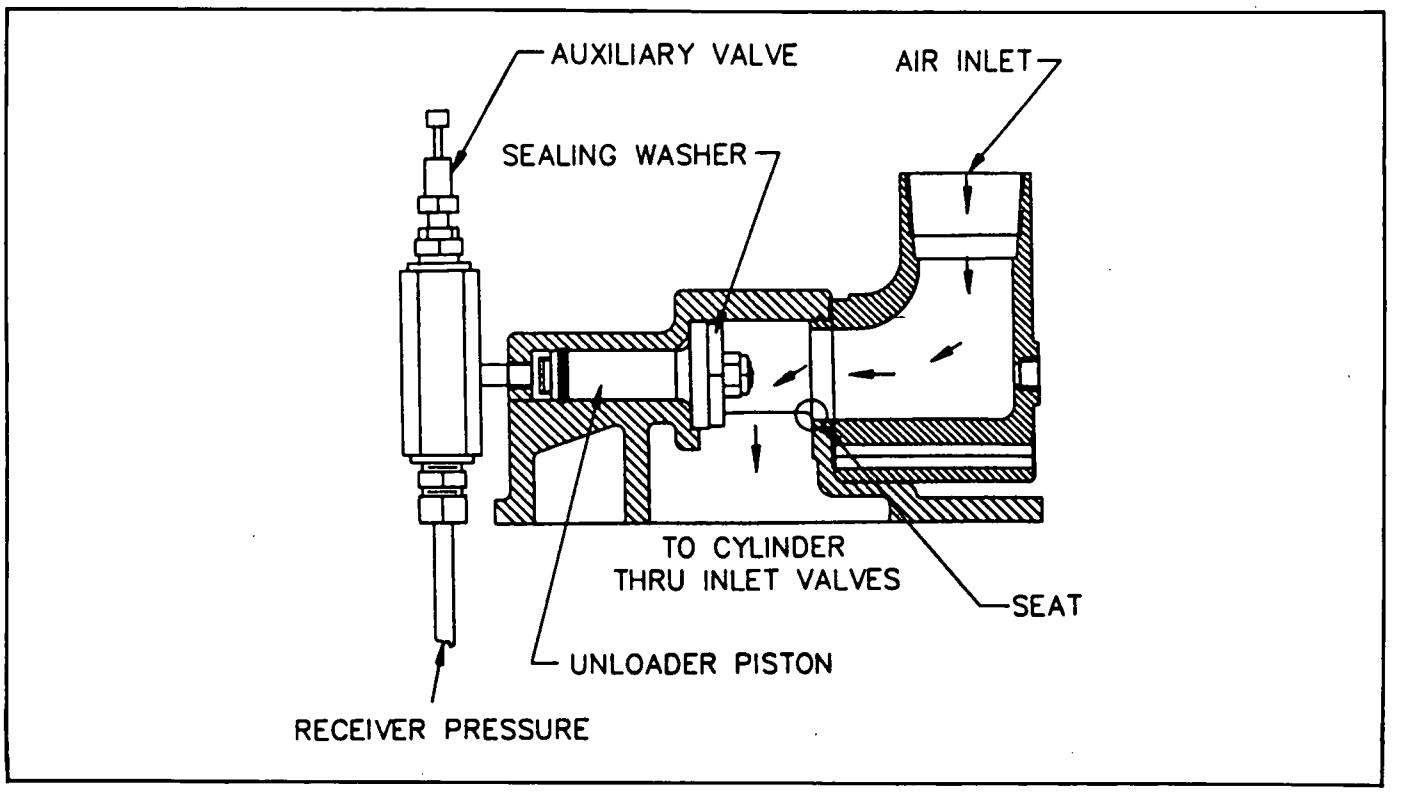

Figure 3-4. Auxiliary Valve and Inlet Unloader.

SECTION IV
OPERATION

OPERATING CHECKS

Satisfactory operation of any piece of mechanical equipment depends, to a large degree, upon adherence to a preventive maintenance schedule.

To obtain optimum performance at minimum cost, observe the "Maintenance" guide on page 15.

COMPRESSOR LUBRICATION

Check the oil level in the bare compressor before each use by removing the oil filler plug and wiping clean. Place the oil gauge with the writing up into the filler hole until the threads touch (DO NOT ENGAGE THE THREADS.) Remove the gauge and read the oil level. If oil level drops below the safe point, add oil to bring level back to the FULL mark. Do not over fill. Replace oil plug HAND TIGHTEN ONLY.

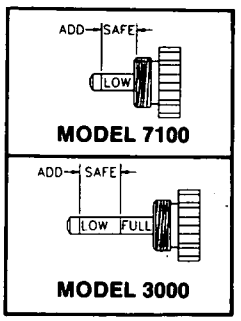

FRAME OIL CHANGE

Oil changes should be made every 500 hours of operation or every 90 days, whichever occurs first. Important: For maximum removal of impurities, drain only when frame oil is hot. After the operator has observed the condition of the oil from a number of changes, the length of time between changes may be extended if so warranted. Frame oil capacity for Model 7100 is 2½ quarts (2.37 liters), and the Model 3000 is 4½ quarts (4.25 liters).

⚠WARNING

Flushing compressor frame with gasoline, kerosene or flammable fluid.
Can cause severe injury or death.
Use a regular flushing oil to flush out compressor frame.

LUBRICATING OIL RECOMMENDATIONS

Ingersoll-Rand recommends the use of XL-T30 lubricating oil after a 200 hour break-in on petroleum based oil. The petroleum lubricating oil should be a non-detergent, containing only rust, oxidation, and anti-foaming inhibitors with either a naphthenic or paraffinic base.

The viscosity should be selected for the temperature immediately surrounding the unit when it is in operation.

OIL VISCOSITY TABLE

Temp. Range	Viscosity at 100°F (37.8°C)	
	SUS	Centistokes
40°F & Below (4.4°C & Below)	150	32
40°F to 80°F (4.4°C to 26.7°C)	500	110
80°F to 125°F (26.7° to 51.7°C)	750	165

The viscosities given in the table are intended as a general guide only. Heavy-duty operating conditions require heavier viscosities, and where borderline temperature conditions are encountered the viscosity index of the oil should be considered. Always refer your specific operating conditions to your industrial lubricant supplier for recommendations.

MOTOR LUBRICATION & CARE

Depending upon the type of electric motor driving your unit, the following lubricating schedule should be observed.

BALL BEARING MOTORS WITH GREASE FITTINGS -Ball bearing motors that have grease fittings and plugs near the bearings are to be repacked with grease once a year. Use a very good grade of ball bearing grease.

BALL BEARING MOTORS PRELUBRICATED FOR LIFE - These motors have no grease fitting or plugs near the bearing and do not require lubrication.

Several major points contributing to proper motor operation and care are given in the following paragraphs. For more detailed instructions, refer to the manufacturers' specific recommendations.

It is also a good practice to monthly blow off the motor windings with a jet of air to prevent an accumulation of dirt. An occasional revarnishing of the windings will greatly prolong the life of the motor.

If the motor is located in an atmosphere where it is exposed to appreciable quantities of water, oil, dirt or fumes, it must be specially constructed.

AIR INLET FILTER/SILENCER

It is very important that the air inlet filter/silencer be kept clean at all times. A dirty inlet filter reduces the capacity of the compressor.

⚠WARNING

Cleaning air inlet filter with gasoline, kerosene or flammable fluid.
Can cause an explosion or fire which can result in severe injury or death.

Use warm soapy water for cleaning air inlet filter.

The filtering element should be taken out at least once a month and cleaned by vacuuming or washing in mild detergent and water. Allow to dry and then reinstall.

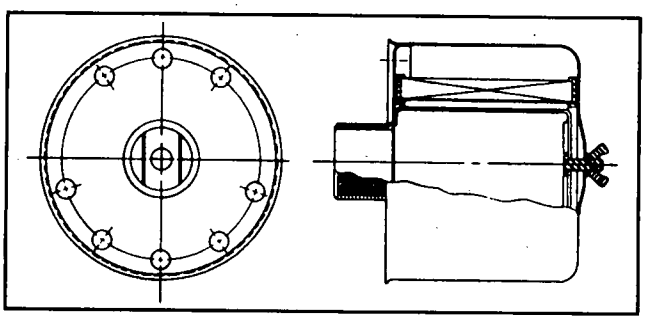

Figure 4-1. Air Inlet Filter/ Silencer

The standard inlet air filter is suitable only for normal industrial applications. Should the compressor be located in an area where the atmosphere contains a heavy concentration of dust and dirt, an air filter utilizing a specially designed, heavy duty (4 micron) element should be used.

All applications of this nature should be referred to the nearest Ingersoll-Rand sales office or distributor.

INTERCOOLER

This compressor is equipped with an intercooler between the first-stage and the second-stage. See Figure 4-2. The purpose of the intercooler is to remove most of the heat of the first-stage compression from the air before it enters the second-stage, thus improving efficiency and decreasing the final discharge air temperature.

The intercooler consists of one or more finned tubes connecting the discharge of the first-stage to the inlet of the second-stage. The compressed air flows through these tubes and its heat is transferred to the cooling fins, where the air from the belt wheel fan passing over the fins dissipates the heat to atmosphere.

Never permit the air flow to these tubes to become obstructed, and clean the surfaces of the tubes whenever deposits of oil, dirt or grease are observed. Use a non-flammable safety solvent for cleaning purposes. During regular overhaul periods, the tubes should be removed from their headers and inspected internally. If the interior of the tubes requires cleaning, cap one end and fill it with a non-flammable safety solvent to help loosen internal deposits of oil, dirt and carbon. Always flush the tubes with warm water and permit them to dry thoroughly before replacing.

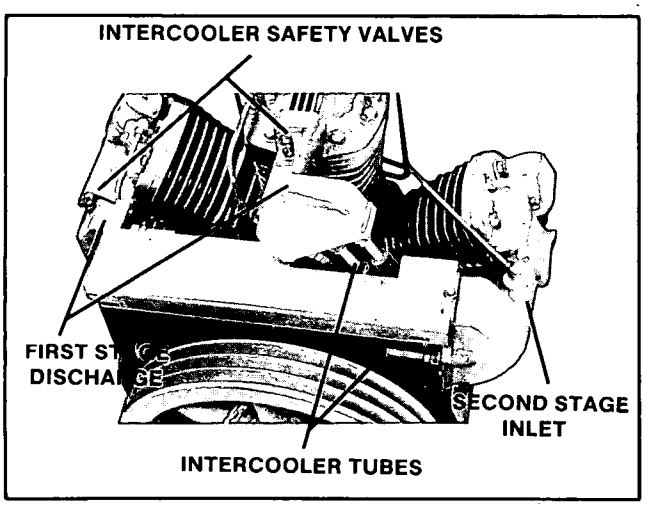

Figure 4-2. Typical Intercooler Tubes and Safety Valves.

SAFETY VALVE

⚠WARNING

This machine contains high pressure air. Can cause injury or death from flying parts.

Do not remove, change, or make substitutions for the safety valves. They should be replaced only by genuine I-R replacement parts.

Safety Valves are designed to protect against damage from over pressure. This compressor will be furnished with the following ASME approved safety valves.

1. Intercooler Safety Valve-The Model 7100 will be supplied with one 80 PSIG (5.6 kg/cm²) safety valve installed in the intercooler, and the Model 3000 will be supplied with two 80 PSIG safety valves installed in the intercooler. See Figure 4-2.
2. Receiver Safety Valve-Receiver mounted units will be supplied with a 200 PSIG (14.1 kg/cm²) safety valve installed in the receiver.

⚠WARNING

This machine contains high pressure air. Can cause injury or death from flying parts.

If a separate or detached air receiver is used, a properly rated ASME approved safety valve must be installed in the receiver.

3. Discharge Safety Valve-On models that are supplied with an aftercooler or tank silencer a 325 PSIG (22.8 kg/cm²) safety valve is installed between the compressor discharge and the aftercooler/silencer.

⚠WARNING

This machine contains high pressure air. Can cause injury or death from flying parts.

If an aftercooler or any other restriction is added to the compressor discharge, an ASME approved safety valve must be installed between the compressor discharge and the restriction.

STARTING UNLOADING SYSTEM

OPERATION OF STARTING UNLOADING SYSTEM — The purpose of the system is to relieve cylinder pressure when the compressor stops permitting it to start against a light load; increasing the life of the driver and belts and also reducing the possibility of tripping the overload relay. The system operates in the following manner:

As shown in Figure 4-3, the centrifugal unloader is attached to

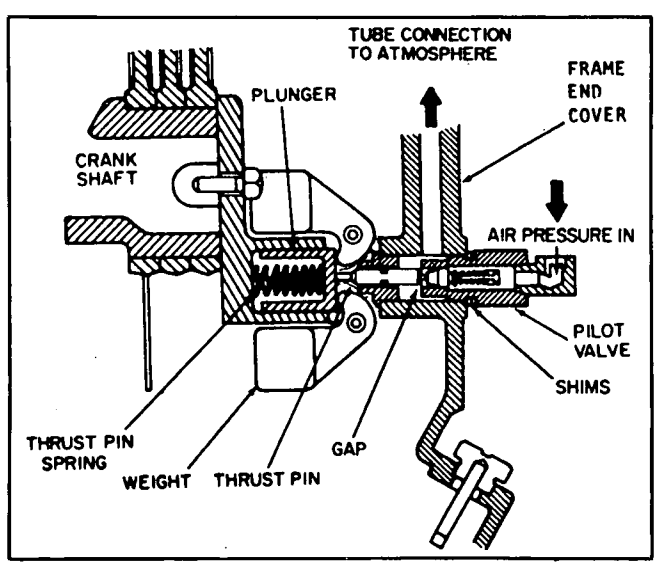

Figure 4-3. Position of weight and thrust pin when compressor is stopped.

the end of the crankshaft, thus when the compressor is in operation, centrifugal force acts upon the unloader weights and they swing outward. (See Figure 4-4). When the compressor stops, these weights retract, (Figure 4-3) permitting the thrust pin spring to move the plunger and thrust pin outward. The thrust pin opens the pilot valve and the trapped air pressure escapes from the cylinder and intercooler through a passage in the frame end cover (See Figure 4-5), through the unloader tube and to atmosphere through the inlet filter/silencer.

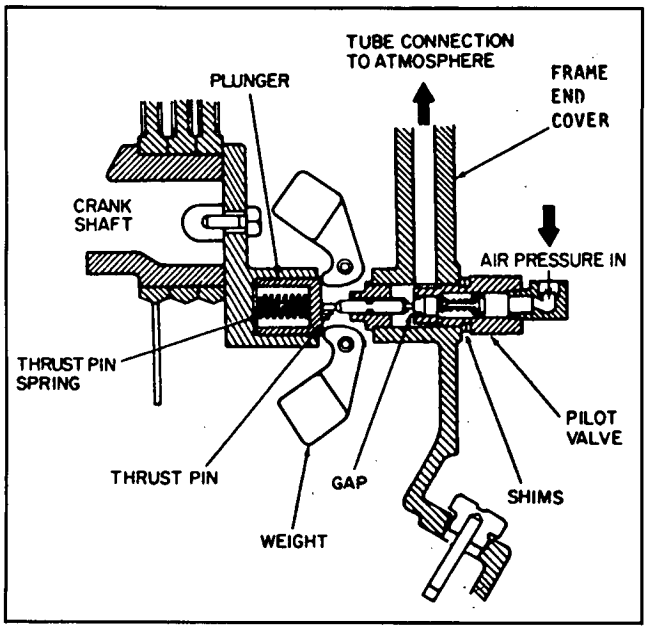

Figure 4-4. Position of weight and thrust pin when compressor is operating.

When the compressor starts, centrifugal force acts upon the unloader weights and they swing outward. This permits the plunger and thrust pin to move inward and the pilot valve to close. The escape path to atmosphere for the cylinder pressure is now closed and the compressor pumps air in a normal manner.

If the pilot valve tube line is excessively hot, it is a good indication that the pilot valve is leaking and adjustment is required.

PILOT VALVE ADJUSTMENT

To adjust the pilot valve, refer to Figure 4-3, and proceed as follows:

1. Stop the compressor. (Disconnect the electrical supply main switch to prevent accidental start-up.)
2. Remove the pilot valve tube and the tube fittings.
3. Remove the pilot valve body and all existing shims.
4. Screw the pilot valve body back into the frame end cover (without any shims) until contact with the thrust pin is felt Advance the pilot valve body ¼ to ½ turn more.

If contact with the thrust pin cannot be felt, the following steps may be necessary to locate the contact point.

1. Insert a small instrument (Punch, rod, nail, etc.) into the end of the pilot valve until it contacts the valve stem.
2. While still inserted in the pilot valve, make a mark on the instrument even with the outside edge of the pilot valve body.
3. Keeping the instrument pressed lightly against the valve stem, screw the pilot valve body into the frame end cover. When the mark on the instrument starts moving out away from the edge of the pilot valve body, contact has been made with the thrust pin.
4. Advance the pilot valve body ¼ to ½ turn more and proceed with step five.
5. Measure the gap between the pilot valve body and the frame end cover. (See Figure 4-3).
6. Remove the pilot valve body and add enough shims to fill the gap measured in step five.
7. Screw the pilot valve body back into the frame end cover until the body is tight on the shims.
8. Reconnect the pilot valve tube and tube fittings.

BREATHER/UNLOADER BY-PASS

OPERATION OF THE BREATHER/UNLOADER BY-PASS: The breather/unloader by-pass tube lines eliminates air pressure build-up in the compressor frame by providing a passage for the air to escape through the inlet unloader (if opened) or (if closed) through the check valve (See Figure 4-5), therefore, by-passing the inlet unloader and escaping to atmosphere through the inlet filter/silencer.

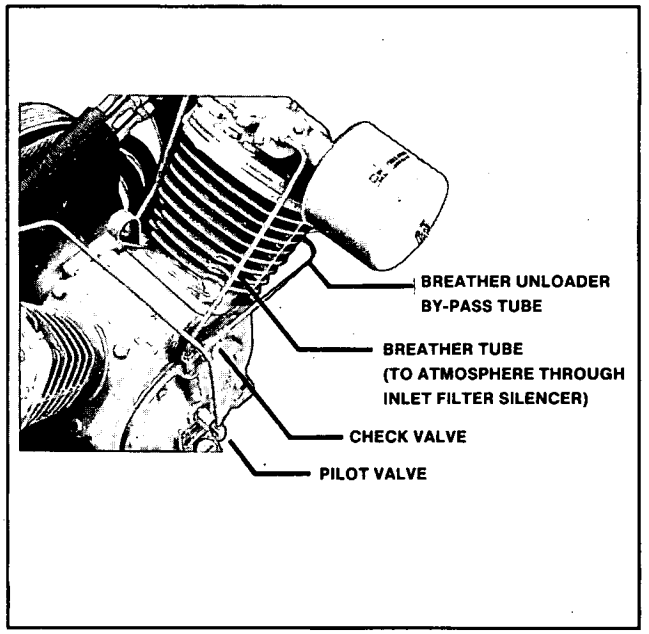

Figure 4-5. Breather/Unloader By-Pass

INTERSTAGE PRESSURE CHART (PSIG)

MODEL NUMBER	COMPRESSOR DISCHARGE PRESSURE (PSIG)			
	100 PSIG 7.0 kg/cm²	150 PSIG 10.5 kg/cm²	200 PSIG 14.1 kg/cm²	250 PSIG 17.6 kg/cm²
7100	37-40	40-43	44-47	47-50
3000	37-40	39-42	40-43	-----

OIL CONSUMPTION CHECK

A rule of thumb for determining a "passing grade" for oil consumption is to consider consumption at or above 50 horsepower-hours per ounce to be acceptable.

To apply this rule, consider the size of machine; say a 5 hp unit uses 2 ounces of oil every 20 hours of operation. Five (5) hp x 20 hours equals 100 horsepower-hours, divided by 2, equals 50 horsepower-hours per ounce.

$$\frac{\text{Motor Horsepower} \times \text{Hours of Operation}}{\text{Ounces of Oil Used}} = \text{Horsepower Hours per Ounce}$$

Machines using more than one (1) ounce of oil per 50 horsepower-hours would be classed as not meeting commercial standards, and further corrective action is recommended.

SECTION V
TROUBLE GUIDE

TROUBLE	CHECK POINT NUMBERS
Oil in discharge air	1-7-9-11-17-22-23
Knocks or rattles	2-18-19-20-21-23
Air delivery has dropped off	1-5-17-18-23-26
Intercooler safety valve pops	6-18-19-26
Trips motor overload or draws excessive current	8-13-14-15-16-17-18-20-21-23
Water in frame or rusting in cylinders	11-12
Machine won't unload	19
Auxiliary valve chatters, leaks around stem	19
Excessive starting and stopping (auto start)	3-5-6-13
Compressor doesn't unload when stopped	17
Compressor runs excessively hot	4-6-10-18-24
Compressor won't come up to speed	6-14-17
Lights flicker when compressor runs	14-15
Abnormal piston, ring or cylinder wear	10-11-22-25

CHECK POINT NUMBERS	TROUBLE CAUSE
1.	Clogged intake filter/silencer(s).
2.	Loose belt wheel or motor pulley or motor with excessive end play in shaft.
3.	Receiver needs draining.
4.	Air to fan wheel blocked off.
5.	Air leaks in piping. (on machine or in outside system)
6.	High pressure discharge valve leaking.
7.	Oil viscosity too low.
8.	Oil viscosity too high.
9.	Oil level too high.
10.	Oil level too low.
11.	Detergent type oil being used. Change to non-detergent type with rust and oxidation inhibitor.
12.	Extremely light duty or located in a damp humid spot.
13.	Change to constant speed control due to steady demand.
14.	Check line voltage, motor terminals for good contact, tight starter connections; proper starter heaters, fuses, wire size.
15.	Poor power regulation (unbalanced line). Consult with power company.
16.	V-Belts pulled excessively tight.
17.	Leaking or maladjusted centrifugal pilot valve, or defective O-Ring on pilot valve.
18.	Leaking, broken, or loose valves.
19.	Leaking, broken or worn inlet unloader parts. Aux. valve dirty, seats worn.
20.	Worn or scored connecting rod, piston pin or crank pin bearings.
21.	Defective ball bearing on crankshaft or on motor shaft. Loose motor fan. Loose bearing spacer on crankshaft.
22.	Oil control ring broken or not seated in, stuck in groove, rough, scratched, or excessive end gap.
23.	Cylinders or piston rings scratched, worn or scored.
24.	Wrong direction of rotation.
25.	Extremely dusty atmosphere. Need more effective air inlet muffler and cleaner.
26.	Defective safety valve.
27.	High press inlet valve leaking.
28.	Oil seal worn or shaft scored.

SECTION VI
MAINTENANCE

⚠WARNING

This machine contains high pressure air.
Can cause injury or death from flying parts.

Always release pressure from compressor and air receiver before removing caps, plugs, fittings, covers; etc.

⚠WARNING

Hazardous voltage.
Can cause severe injury or death.

Disconnect main power before servicing compressor.

MAINTENANCE OPERATION	SERVICE INTERVAL Operating Hours/Months - whichever comes first				
	500/3	1000/6	1500/9	2000/12	2500/15
COMPRESSOR					
Frame Oil Level - Check	Weekly				
Air Inlet Filter - Inspect and Clean	Monthly				
Inspect Oil for Contamination —Change if necessary	Monthly				
Frame Oil—Change Petroleum Lube	X	X	X	X	X
Frame Oil—Change XL-T30	X	X	X	X	X
Inlet Unloader Piston O-Ring —Lubricate O-Ring with Lubricant capable of 200°F				X	
Compressor Valves - Inspect, Clean or Replace				X	
Intercooler Clean Exterior	Monthly				
Low Oil Level Switch - Check Operation	X	X	X	X	X
Operate Safety Valves - Manually	Monthly				
Clean Cylinder Cooling Fins	Monthly				
V-BELT DRIVE					
Belt Tension - Check	Monthly				
MOTOR					
Motor Bearings - Check and Lubricate				X	
Clean	Monthly—(Weekly in Dusty Locations)				
AFTERCOOLER					
Air cooled: Clean externally	Monthly—(Weekly in Dusty Locations)				
Clean air flow internally				X	
RECEIVER					
Drain Condensate - Manual	Daily				
Operate Safety Valves	Monthly				
GENERAL					
Tighten or check all bolts	Monthly				
Check for Unusual Noise and Vibration	Daily				
Inspect for Air Leaks	Monthly				

GENERAL

The maintenance section of this book covers only those operations with which maintenance personnel may not be too familiar. It is expected that the average mechanic's training and experience will permit him to perform the more common maintenance functions without the need for detailed instructions.

AIR VALVE INSPECTION

The valve assemblies should be removed from your compressor and new valves installed to the valve plate after every 2000 hours of operation.

1. Refer to the instructions furnished with the valve/gakset kit to replace the valves.
2. Refer to Figure 6-1. Disconnect and remove the tubing to the inlet unloader(s). Remove the inlet filter/silencer from the inlet unloader cover.
3. Loosen and remove the inlet unloader capscrews, then pull the inlet unloader cover away from the air head, using care not to damage the inlet cover o-ring.
4. Loosen and remove the capscrews securing the intercooler manifold to the air head.
5. Loosen and remove the air head capscrews from the air head, and remove the air head from the valve assembly. If the valve assembly and the air head are removed from the cylinder together, observe the assembly direction of the valve plate before removing from air head. Make note of this direction in order to re-assemble the air head and valve assembly to the cylinder.
6. Reverse the disassembly procedures to re-assemble the compressor. (See Torque Valve Table below.)

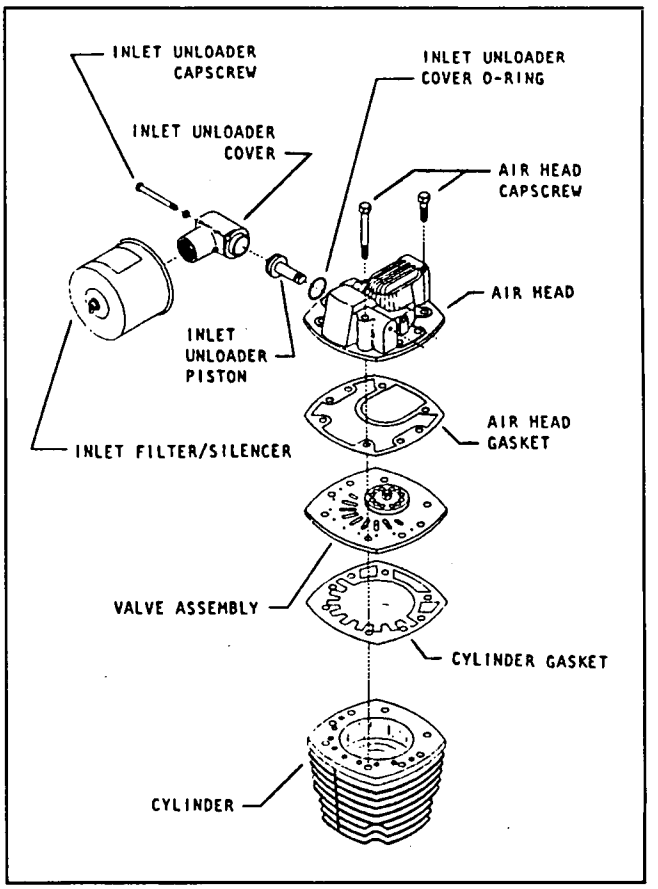

Figure 6-1. Valve and air head assembly.

TORQUE VALUE TABLE

NATIONAL COARSE	GRADE 2		GRADE 5		GRADE 8	
Dia. Pitch						
1/4" — 20	48 In. Lb.	5 Nm.	72 In. Lb.	8 Nm.	108 In. Lb.	12 Nm.
5/16" — 18	96 In. Lb.	11 Nm.	144 In. Lb.	16 Nm.	18 Ft. Lb.	24 Nm.
3/8" — 16	15 Ft. Lb.	20 Nm.	23 Ft. Lb.	31 Nm.	31 Ft. Lb.	42 Nm.
7/16" — 14	24 Ft. Lb.	33 Nm.	36 Ft. Lb.	49 Nm.	51 Ft. Lb.,	69 Nm.
1/2" — 13	37 Ft. Lb.	50 Nm.	56 Ft. Lb.	76 Nm.	80 Ft. Lb.	108 Nm.
9/16" — 12	53 Ft. Lb.	72 Nm.	81 Ft. Lb.	110 Nm.	116 Ft. Lb.	157 Nm.
5/8" — 11	68 Ft. Lb.	92 Nm.	113 Ft. Lb.	153 Nm.	160 Ft. Lb.	217 Nm.
3/4" — 10	131 Ft. Lb.	177 Nm.	203 Ft. Lb.	275 Nm.	286 Ft. Lb.	388 Nm.
7/16" — 20	Inlet Unloader Piston Lock Nut — Torque to 90-100 In. Lb. (10.7 Nm.)					

We recommend the use of a torque wrench on all bolts, capscrews, and nuts using the values in the following table. The values given are for threads lubricated with oil or grease. To determine the grade of bolt or capscrew being tightened, use the following information. Grade 2: No markings or vendor indentification on the head. Grade 5: Letter "S" or 3 lines and/or vendor identification on the head. Grade 8: Letter "V" or 6 lines and/or vendor identification on the head.

BELT INSTALLATION AND ADJUSTMENT

When installing new belts, do not pry the belts over the pulley grooves. The proper method of removing and installing new belts is to loosen the anchor screws and the belt tightener screw, Figure 6-2, and push the motor toward the compressor. Use the tightener screw to adjust belt tension on new belts.

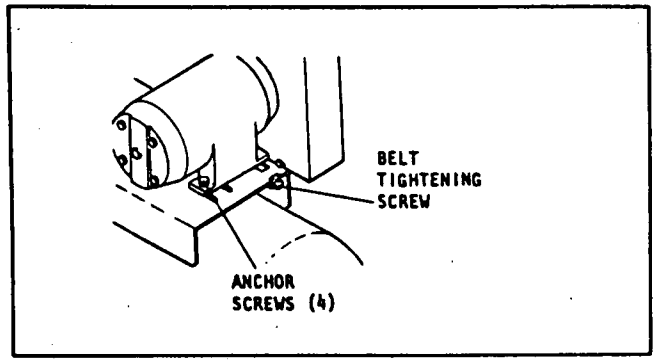

Figure 6-2. Belt Adjustments.

It is important that the belts be properly adjusted. A belt that is too loose will slip and cause heating and wear, and a belt that is too tight may overload the bearings. A quick check to determine if belt adjustment is proper may be made by observing the slack side of the belt for a slight bow when the unit is in operation. See Figure 6-3. If a slight bow is evident, belts are usually adjusted satisfactorily. However, the recommended method of checking belt tension is by the more accurate spring scale measurement method that follows:

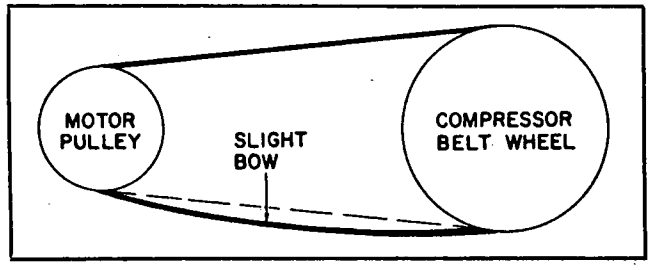

Figure 6-3. Visual Method.

A. Measure the belt span (t) as shown in Figure 6-4.

B. At the center of the span (t), apply a force (perpendicular to the span, by attaching a spring scale to the two outside belts. The force applied to the spring scale should be sufficient to deflect the belts 1/64" (.396 mm) for every inch of span length (t). For example: The deflection of 100" (2540 mm) span would be 100/64" or 1 9/16" (39.6 mm), thus,the force applied to the spring scale should deflect the belts to 1 9/16" (39.6 mm).

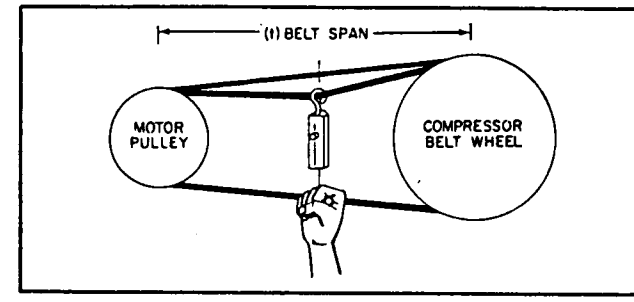

Figure 6-4. Spring Scale Method.

C. When the belts are deflected the necessary distance, compare the spring scale reading (in lbs. force) with the value given in the following table.

STANDARD BELT TENSION

Belt Type	Normal Tension	150% Normal Tension
B	2¾ lbs. (1.25 kg)	4 lbs. (1.81 kg)
C	5½ lbs. (2.5 kg)	8¼ lbs. (3.74 kg)

If the reading is between the value for normal tension and 150% normal tension, the belt tension should be satisfactory. A reading below the value for normal tension indicates the belt slack should be reduced, and conversely, a reading exceeding the value for 150% normal tension indicates the belt slack should be increased. Experience has shown that a new drive can be tightened initially to two times normal tension to allow for any drop in tension during run in.

SECTION VII
OPTIONAL EQUIPMENT AND ACCESSORIES

AIR-COOLED AFTERCOOLER

The purpose of an aftercooler is to reduce the discharge temperature of the compressed air and to facilitate removal of water vapor.

The cooler consists of finned tubing through which compressed air passes on its way to the air receiver. Cooling air drawn over these tubes by the fan-type flywheel cools the compressed air and condenses moisture. This moisture passes on to the receiver and is drained either manually or by an automatic drain trap.

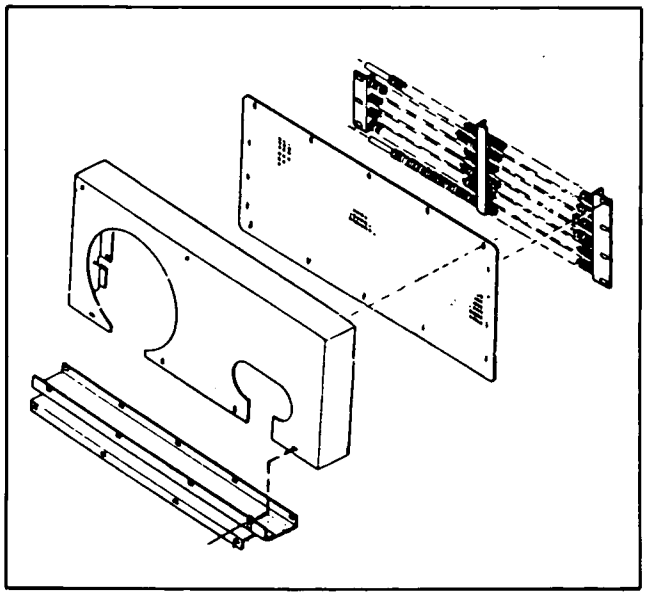

Figure 7-1. Typical Air-Cooled Aftercooler (Disassembled).

SERVICING - The air-cooled aftercooler will require very little maintenance. The tubes should be blown clean with compressed air monthly.

WATER-COOLED AFTERCOOLER

The model S-6 water-cooled aftercooler may be furnished with your compressor if requested. The air and water inlet and outlet locations are shown in Figure 7-2.

The cooler consists of multi tubes, supported in a shell by internal baffles and headers on each end. The tubes, shell, baffles, and headers are all made of copper and brazed together. The internal baffles divert the water flow for better heat transfer.

Mount the aftercooler as close to the air receiver as possible, using pipe of the same diameter as the compressor discharge port, if the total length is less than 10 feet (3.04 m). If the total length is more than 10 feet (3.04 m), use the next larger diameter size pipe. The aftercooler must be adequately supported.

Air piping from the compressor discharge to the aftercooler should be sloped in such a manner to prevent condensate from draining into the compressor, but if overhead piping is used, a drain leg, to trap condensed moisture, should be mounted next to the compressor. (See Figure 2-3.)

An automatic water shut-off valve is available as optional equipment for controlling the flow of water through the aftercooler in synchronization with the operation of the compressor.

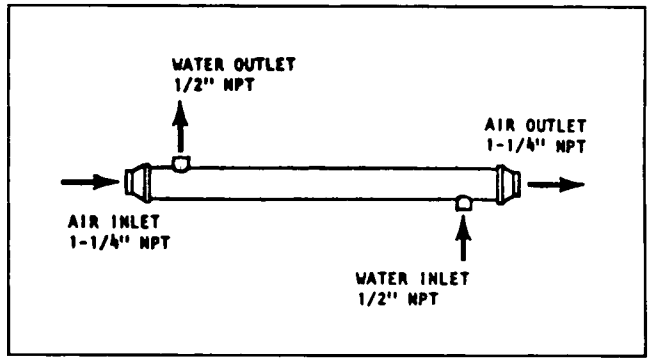

Figure 7-2. Typical water-cooled aftercooler.

This valve is always used in conjunction with a manually operated valve for regulating the rate of water flow. The water flow should be adjusted to allow a maximum discharge water temperature of 120°F.

If an automatic water valve is not used, merely install a hand operated valve in the water inlet line.

SERVICING — The water-cooled aftercooler is designed as an efficient but economical throw away type cooler which may be cleaned if desired.

To maintain this cooler, peridically blow compressor air thru each individual tube until they are clean and free of any foreign obstructions.

To clean the water side of the cooler, use a hot water and cleaner solution or a non-flammable chemical flush. Back flush several times until all foreign matters has been dispelled. If calcium build up or other foreign matter is still evident, disposing of the cooler and purchase of a new one is recommended.

AUTOMATIC WATER VALVE

The automatic water valve is furnished only when specified, and it is to be installed in the water inlet line ahead of the aftercooler. Always install a hand valve in the line to control the rate of water flowing through the aftercooler.

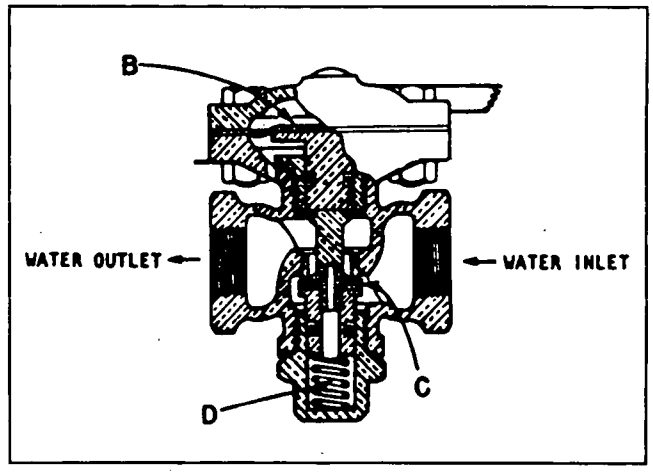

Figure 7-3. Automatic Water Shutoff Valve.

The automatic water valve stops the flow of water through the water-cooler aftercooler when the compressor stops or operates

unloaded. The operation of the water valve is controlled by air pressure form the compressor intercooler.

When the compressor starts or loads, intercooler air pressure against diaphragm "B" (See Figure 7-3) overcomes the pressure of spring "D". Valve "C" now opens, permitting water to flow through the water valve and the aftercooler. When the compressor stops or unloads, the pressure is removed from the intercooler. Valve "C" now closes, shutting off the water flow.

AUTOMATIC DRAIN TRAP

When specified on the purchase order, units are provided with an automatic condensate drain trap. The purpose of the drain trap is to expel the condensate from the receiver and/or the aftercooler.

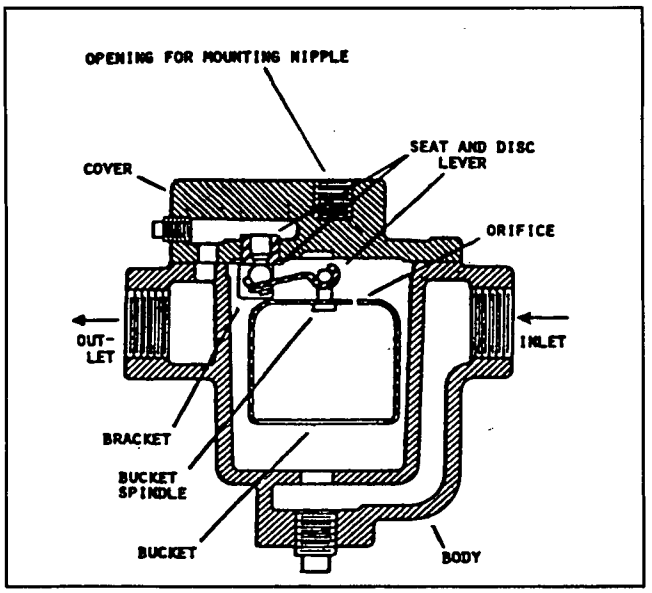

Figure 7-4. Inverted-Bucket, Automatic Condensate Drain Trap.

⚠WARNING

This machine contains high pressure air. Can cause injury or death from flying parts.

Always release pressure from compressor and air receiver before removing caps, plugs, fittings, covers, priming condensate trap: etc.

TO PRIME CONDENSATE TRAP: (See Figure 7-5). Close manual shut-off valve installed in bottom side of pipe tee. Remove pipe plug installed in top of pipe tee, and pour water into top opening of pipe tee until trap and pipe tee are filled with water. Open manual shut-off valve releasing water in pipe tee into air receiver. Re-install pipe plug using pipe thread lubricant and tighten to prevent air leak.

When the inverted-bucket-style, automatic condensate drain trap is properly primed, and as pressure is built up in the air receiver, condensate is forced into the trap and out the trap outlet. However, if the trap is not properly primed, the inverted bucked remains in its down position. This causes the valve to remain open, allowing air pressure leakage to atmosphere.

Where there is little or not condensate present in the air receiver, the trap will continue to expel a small amount of air pressure each time the inverted bucket loses buoyancy. The amount of air pressure lost by the cycling of the inverted bucket is negligible; however, it may present the appearance of a faulty automatic condensate drain trap if this cycling is not properly understood. It is very important to understand that this small amount of intermittent air leakage is perfectly normal and should not give cause for alarm. However, if air leakage occurs on a continuous basis, it could be an indication the trap has lost its prime or that the trap may be faulty.

TO PREVENT REPRIMING TRAP, CLOSE MANUAL SHUT-OFF VALVE ON TRAP BEFORE COMPLETE AIR LOSS OF RECEIVER.

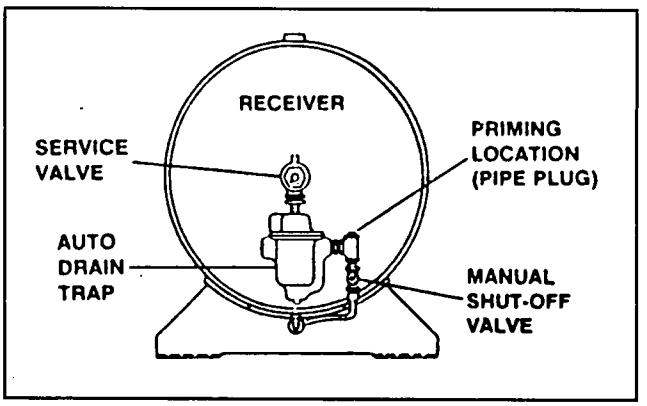

Figure 7-5. Auto Drain Trap priming location.

AIR RECEIVER

If the air system into which the compressor discharges does not have sufficient volume, the compressor will cycle too frequently. In this case, an air receiver must be used to provide enough volume to operate the regulation system of the compressor.

⚠WARNING

This machine contains high pressure air. Can cause injury or death from flying parts.

Never operate the compressor above the maximum working pressure of the air receiver.

Air receivers must meet the safety requirement of the state in which they are used.

THE AIR RECEIVER IS MANUFACTURED TO MEET THE REQUIREMENTS OF THE ASME BOILER AND PRESSURE VESSEL CODE.

TYPICAL WIRING DIAGRAM

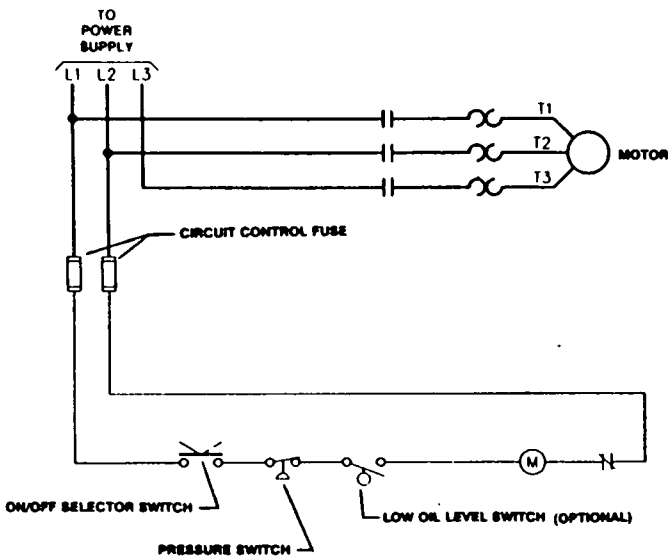

DEFINITE PURPOSE MOTOR STARTER

THREE PHASE MOTOR

NOTES:
1. L1, L2, L3, - INDICATES POWER SUPPLY LINE TERMINALS.
2. T1, T2, T3, - INDICATES LOAD TERMINALS.
3. M - INDICATES MAGNETIC STARTER COIL.
4. CIRCUIT SHOWN IN NORMAL POSITION DE-ENERGIZED AND WITH COMPRESSOR CRANKCASE EMPTY OF OIL.
5. ALL WIRING TO BE IN ACCORDANCE WITH NATIONAL ELECTRIC CODE. CHECK FOR ADDITIONAL LOCAL AND STATE REGULATIONS AND CODES.
6. PRESSURE SWITCH NOT SUPPLIED ON CONSTANT SPEED CONTROL MODEL.

TYPICAL WIRING DIAGRAM

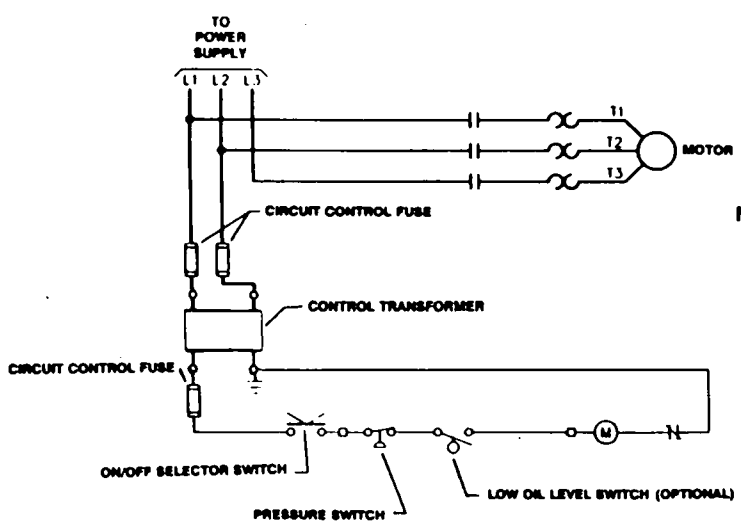

STANDARD NEMA MOTOR STARTER

THREE PHASE MOTOR

NOTES:
1. L1, L2, L3, - INDICATES POWER SUPPLY LINE TERMINALS.
2. T1, T2, T3, - INDICATES LOAD TERMINALS.
3. M - INDICATES MAGNETIC STARTER COIL.
4. CIRCUIT SHOWN IN NORMAL POSITION DE-ENERGIZED AND WITH COMPRESSOR CRANKCASE EMPTY OF OIL.
5. ALL WIRING TO BE IN ACCORDANCE WITH NATIONAL ELECTRIC CODE. CHECK FOR ADDITIONAL LOCAL AND STATE REGULATIONS AND CODES.
6. PRESSURE SWITCH NOT SUPPLIED ON CONSTANT SPEED CONTROL MODEL.

NOTES

NOTICE

THE USE OF REPAIR PARTS OTHER THAN THOSE INCLUDED WITHIN THE INGERSOLL-RAND COMPANY APPROVED PARTS LIST MAY CREATE UNSAFE CONDITIONS OR MECHANICAL FAILURES OVER WHICH THE INGERSOLL-RAND COMPANY HAS NO CONTROL. THEREFORE, INGERSOLL-RAND COMPANY CAN BEAR NO RESPONSIBILITY FOR EQUIPMENT IN WHICH NON-APPROVED REPAIR PARTS ARE INSTALLED.

The manufacturer reserves the right to make changes or add improvements without notice and without incurring any obligation to make such changes or add such improvements to products sold previously.

GLOSSARY

GROUP ASSEMBLY PARTS LIST
Parts are listed in disassembly sequence, where applicable. The relationship of an article to its next higher assembly is indicated by indenture. For example, in the description column;

Assemblies and Detail Parts
. Attaching Parts for Assemblies and Detail Parts
. . Subassemblies
. . Attaching Parts of Subassemblies
. . . Detail Parts for Subassemblies, etc.

ITEM COLUMN
The item number is the number assigned to the part in the listing. This item number identifies the part on the associated illustration.

PART NUMBER COLUMN
All numbers shown are Ingersoll-Rand part numbers which must be specified when ordering replacement parts. The letters NSS indicates that the part is "Not Sold Separately" with certain models. The letter NA indicates that the part is "Not Applicable" to certain models.

DESCRIPTION COLUMN
The description column contains the standard item name with modifiers. The relationship of an article to its next higher assembly is shown in this column by indenture.

QTY PER ASSEMBLY COLUMN
The quantities specified in this column are the number of parts used per one next higher assembly and are not necessarily the total number of parts used in the overall model. The letters NA indicate that the part is "Not Applicable" to certain models.

HOW TO SELECT RECOMMENDED SPARES

This catalog contains a listing of the parts which are included in each of the following classes of recommended spares.

CLASS I — MINIMUM—Suggested for Domestic Service where interruptions in service are not important.

CLASS II —AVERAGE— Suggested for Domestic Service where some interruptions in continuity of service are not objectionable.

CLASS III —MAXIMUM—Suggested for Export or for Domestic Service where interruption in service are objectionable.

When ordering recommended spares or step-saver kit, please follow the procedure as outlined for compressor parts.

ORDERING INSTRUCTIONS

Refer all communications to the nearest Ingersoll-Rand Service Distributor

HOW TO ORDER COMPRESSOR PARTS

When ordering replacement parts, please specify:

1. The MODEL and SERIAL NUMBER as stamped on Compressor Nameplate.
2. The FORM NUMBER of this booklet.
3. The QUANTITY, DESCRIPTION & PART NUMBER exactly as listed.

EXAMPLE

Send the following parts for a Model _____

Serial No. _____

Literature Form Number _____

1 Switch, Pressure	(32147738)
1 Element-Filter	(97021745)
1 Gauge, Pressure	(32013872)

LOOK WHAT INGERSOLL-RAND CAN DO FOR YOU

Ingersoll-Rand Company
Small Compressor Division
Campbellsville, Ky. 42718

SPECIAL ENGINEERING SERVICE
We can help you with your compressed air problems by surveying your needs and recommending the proper compressor and air piping system for maximum efficiency.

EFFICIENT FIELD SERVICE
We maintain a staff of trained mechanics to provide you with preventive maintenance or meet any emergencies you may have.

SPARE PARTS
We stock genuine I-R spare parts for your I-R equipment, avoiding possible costly delays or the substitution by inferior parts. As a result, old machines are kept in good-as-new condition.

COMPLETE REPAIR SERVICE
Trained mechanics will repair or overhaul compressors by factory recommended methods, using only genuine I-R parts.

COMPLETE STOCK OF EQUIPMENT
Our stock of complete machines which can usually take care of any need, is backed up by Ingersoll-Rand prompt factory shipment to assure you on-time delivery.

A SUBSTITUTE IS NOT A REPLACEMENT.
You can protect your compressor by insisting on genuine Ingersoll-Rand replacement parts and maintenance kits. Not only are they made with precise dimensions, and OEM-specified metallurgy, but each one is backed by our warranty. Ask your Air Center, distributor, or direct Ingersoll-Rand salesperson for an "It's Real Ingersoll-Rand" sticker to mark your unit, and be sure that your machines are equipped with only the best - genuine Ingersoll-Rand replacement parts.

DISTRIBUTED BY:

© 1988 Ingersoll-Rand Company

Printed in U.S.A.

J-PRESS®

FILTER PRESS

800mm

OWNERS-MANUAL

JWI®

OWNERS MANUAL
SERIAL # F05215

1	CUSTOMER SERVICE
2	SPECIFICATIONS
3	SAFETY INSTRUCTIONS
4	INSTALLATION & SETUP
5	GENERAL DESCRIPTION
6	OPERATION
7	PREVENTIVE MAINTENANCE
8	TROUBLESHOOTING
9	DRAWINGS
10	RECOMMENDED SPARE PARTS
11	MANUFACTURERS LITERATURE
12	RETURN POLICY
13	OPTIONAL EQUIPMENT

Proprietary Information
Information contained herein is proprietary information of JWI®, furnished for customer and internal use only. All other uses of this material without the written consent of JWI are prohibited.

The information contained herein does not purport to cover all details or variations in equipment, nor to provide for every possible contingency to be met in connection with JWI products. Should further information be desired, or should particular problems arise which are not covered sufficiently for the purchaser purposes, contact JWI.

1	CUSTOMER SERVICE
2	SPECIFICATIONS
3	SAFETY INSTRUCTIONS
4	INSTALLATION & SETUP
5	GENERAL DESCRIPTION
6	OPERATION
7	PREVENTIVE MAINTENANCE
8	TROUBLESHOOTING
9	DRAWINGS
10	RECOMMENDED SPARE PARTS
11	MANUFACTURERS LITERATURE
12	RETURN POLICY
13	OPTIONAL EQUIPMENT

CUSTOMER SERVICE

Congratulations on your purchase of a new J-Press®. In choosing J-Press, you have selected a filter press engineered to give you superior dependability and performance. Manufactured to exacting standards, the J-Press combines advanced technology, functional design, and high quality craftsmanship.

JWI's commitment to quality is equaled only by our commitment to customer service and support. Your purchase includes more than the JWI products -- it includes the purchase of the company. The contacts listed below are resources that we offer you.

	Contact Name,Title	Telephone
Spare Parts:	Drew Christensen, Spare Parts Manager	616/748-7615
	John Bosch, Spare Parts Representative	616/748-7616
	Mike Gethin, Spare Parts Representative	616/748-7617
Field Service:	Mike Brinks, Customer Service Manager	616/748-7635
Technical Service for Applications:	John Trautmann, V.P. Technical Services	616/748-7618
Lab Service for Sample Testing:	Robert Hamm, Lab Director	616/748-7619
Engineering:	Vic Van't Hof, Project Leader	616/748-7637
Sales:	Dennis Bush, Regional Sales Manager	616/748-7607

Your Local JWI Representative is:

NEW ENGLAND SALES
740 Corporate Park
Pembroke, MA 02359
Phone: 617/826-8855
Fax: 617/826-2390

1	CUSTOMER SERVICE
2	SPECIFICATIONS
3	SAFETY INSTRUCTIONS
4	INSTALLATION & SETUP
5	GENERAL DESCRIPTION
6	OPERATION
7	PREVENTIVE MAINTENANCE
8	TROUBLESHOOTING
9	DRAWINGS
10	RECOMMENDED SPARE PARTS
11	MANUFACTURERS LITERATURE
12	RETURN POLICY
13	OPTIONAL EQUIPMENT

MODEL NUMBER	800G32-20-10SYLS
SERIAL NUMBER	F05215
TOTAL VOLUME	10 ft^3 (0.28 m^3)
NUMBER OF CHAMBERS	20
VOLUME/CHAMBER	0.50 ft^3 (0.014 m^3)
TOTAL FILTER AREA	216 ft^2 (20 m^2)
PLATE SIZE	800 mm
PLATE STYLE	CGR
FILTER CLOTH	46409-4
OVERALL LENGTH OF PRESS	150 inches (3810 mm)
OVERALL WIDTH OF PRESS	49.50 inches (1257 mm)
CONTROL LOCATION	Left Hand
CLOSING DEVICE	Air Powered Hyd. Pump
AIR SUPPLY REQUIRED (MAXIMUM)	80 scfm @ 100psi (per press) (2.24 m^3/max @ 7 bar)
HYDRAULIC CLOSING PRESSURE (MAXIMUM)	3700 psi (252 bar)
RELIEF VALVE SETTING	4100 psi (279 bar)
HYDRAULIC RESERVOIR CAPACITY	4.5 gal (17 ℓ)
HYDRAULIC OIL RECOMMENDED	Rykon All-Weather Type 46
HYDRAULIC CYLINDER - SIZE	6" Bore X 24" Stroke (152 mm X 610 mm)
HYDRAULIC CYLINDER - TYPE	Parker
MAXIMUM INLET FEED PUMP PRESSURE	100 psi (7 bar)
DISCHARGE MANIFOLD STYLE	PVC Air Blow Down
OPTIONS	Automatic Pump Control System, Semi-Auto Shifter

MODEL NUMBERING CONVENTION

Example: 800G32-40/80-20/40DYLS
Numbering: A B C D E FGHI

A = Plate size in millimeters

B = G/Gasketed
N/Non-Gasketed

C = Cake Thickness

D = Current Chambers/Future Chambers

E = Capacity in Cubic Feet/Future Capacity

F = M/Manual (hand jack)
D/Double Acting Cylinder
S/Shifter with double acting cylinder

G = Y/Manifold- Yes
N/Manifold- No

H = L/Skeleton Pressure (not plates) 100 psi (6.8 bar)
H/Skeleton Pressure (not plates) 225 psi (15.3 bar)

I = S/Sidebar style press
O/Overhead style press

1	CUSTOMER SERVICE
2	SPECIFICATIONS
3	SAFETY INSTRUCTIONS
4	INSTALLATION & SETUP
5	GENERAL DESCRIPTION
6	OPERATION
7	PREVENTIVE MAINTENANCE
8	TROUBLESHOOTING
9	DRAWINGS
10	RECOMMENDED SPARE PARTS
11	MANUFACTURERS LITERATURE
12	RETURN POLICY
13	OPTIONAL EQUIPMENT

TABLE OF CONTENTS

GENERAL SAFETY INFORMATION 3.1
RECOMMENDED LOCKOUT PROCEDURE 3.3
TEMPERATURE/PRESSURE CURVE 3.5
CHEMICAL RESISTANCE GUIDE 3.6

To ensure maximum safety, optimum performance, and to gain knowledge of the product, it is essential that any operator of the filter press read and understand the contents of this manual before the press is operated. Pay particular attention to the safety symbol, which means CAUTION, WARNING or DANGER--"personal safety instruction." Read and understand the instruction because it has to do with safety. Failure to comply with the instruction can result in machine damage or personal injury.

The precautions mentioned in this manual are not intended to cover all of the hazards that can exist in a plant or on this machine. Using safety mechanisms requires the constant attention of everyone near this (or any) machine.

A plant and the related equipment are only as safe as the personnel that use them. Proper equipment maintenance and use of personal safety devices will contribute as much toward safety as will any number of mechanical safety devices.

Study this manual thoroughly before attempting to install, operate or maintain this machine.

Only competent, well-trained individuals should operate or maintain this equipment.

Explain the operation of this machine and its safety devices to a new operator before his or her operating the machine. Be certain that the operator fully understands the machine, and is qualified to handle its operation.

Develop a safety checklist for the devices on this machine and perform regular maintenance to ensure proper operation.

As required by OSHA 1910.151(C), JWI also encourages the customers of its various products to install eyewash and/or safety showers adjacent to the product installation.

SAFETY DECALS
Safety and instruction decals are located on the filter press frame. Replace any damaged decals.

CAUTION
Do not operate equipment without eye protection.

CAUTION
Do not operate unless safety guards or devices are in place and properly adjusted.

CAUTION
The main air supply to the machine should be free from water and oil. The presence of water or oil can cause severe damage to hydraulic components. Air supply to the press should be a minimum of 85 psi (5.8 bar) and maximum of 120 psi (8.2 bar). Disconnect the air supply before servicing the press. See the Air Quality Specifications in the Installation & Setup section of this manual for detailed information.

CAUTION
Disconnect electrical power before servicing the press. See following section on proper lockout procedure.

CAUTION
Do not operate this machine unless all safety devices are working properly. Check all devices before starting the machine.

RECOMMENDED LOCKOUT OR TAGOUT SYSTEM PROCEDURES*

GENERAL

Lockout is the preferred method of isolating machines or equipment from energy sources. To help employers develop a procedure that meets the requirements of the standard, however, the following simple procedure is provided for use in either lockout or tagout programs. This procedure may be used when there are limited number or types of machines or equipment or there is a single power source. For more complex systems, a more comprehensive procedure will need to be developed, documented, and utilized.

LOCKOUT (OR TAGOUT) PROCEDURE FOR JWI® EQUIPMENT

PURPOSE

This procedure establishes the minimum requirements for the lockout or tagout of energy isolating devices. It shall be used to ensure that the machine or equipment are isolated from all potentially hazardous energy, and locked out or tagged out before employees perform any servicing or maintenance activities where the unexpected energization, start-up or release of stored energy could cause injury (Type(s) and Magnitude(s) of Energy and Hazards).

RESPONSIBILITY

Appropriate employees shall be instructed in the safety significance of the lockout (or tagout) procedure. Each new or transferred effected employee and other employees whose work operations may be in the area shall be instructed in the purpose and use of the lockout or tagout procedure.

PREPARATION FOR LOCKOUT OR TAGOUT

Make a survey to locate and identify all isolating devices to be certain which switch(s), valve(s) or other energy isolating devices apply to the equipment to be locked or tagged out. More than one energy source (electrical, mechanical, or others) may be involved.

SEQUENCE OF LOCKOUT OR TAGOUT SYSTEM PROCEDURE

(1) Notify all affected employees that a lockout or tagout system is going to be used and the reason. The authorized employee shall know the type and magnitude of energy that the machine or equipment utilizes and shall understand the hazards.
(2) If the machine or equipment is operating, shut it down by normal shutdown procedure.
(3) Operate the switch, valve, or other energy isolating device(s) so that the equipment is isolated from its energy source(s). Stored energy (such as that in springs, elevated machine members, rotating flywheels, hydraulic systems, and air, gas, steam, or water pressure, etc.) must be dissipated or restrained by methods such as repositioning, blocking, bleeding down, etc.
(4) Lockout or tagout the energy isolating devices with assigned individual lock(s) or tag(s).

(5) After ensuring that no personnel are exposed, and as a check on having disconnected the energy sources, operate the push button or other normal operating controls to make certain the equipment will not operate.
Caution: Return operating control(s) to "neutral" or "off" position after test.
(6) The equipment is now locked out or tagged out.

RESTORING MACHINES OR EQUIPMENT TO NORMAL PRODUCTION OPERATIONS

(1) After service and/or maintenance is complete, and equipment is ready for normal production operations, check the area around the machines or equipment to ensure that no one is exposed.
(2) After all tools have been removed from the machine or equipment, guards have been reinstalled and employees are in the clear, remove all lockout or tagout devices. Operate the energy isolating devices to restore energy to the machine or equipment.

PROCEDURE INVOLVING MORE THAN ONE PERSON

In the preceding steps, if more than one individual is required to lockout or tagout equipment, each shall place his/her own personal lockout or tagout device on the energy isolating device(s). When an energy isolating device cannot accept multiple locks or tags, a multiple lockout or tagout device (hasp) may be used. If lockout is used, a single lock may be used to lockout the machine or equipment with the key being placed in a lockout box or cabinet. Each employee will then use his/her own lock to secure the box or cabinet.

BASIC RULES FOR USING LOCKOUT OR TAGOUT SYSTEM PROCEDURE

All equipment shall be locked out or tagged out to protect against accidental or inadvertent operation when such operation could cause injury to personnel. Do not attempt to operate any switch, valve, or other energy isolating device where it is locked or tagged out.

*As listed in the Federal Register/Vol. 54, No. 169/Friday, September 1, 1989 Rules and Regulations.

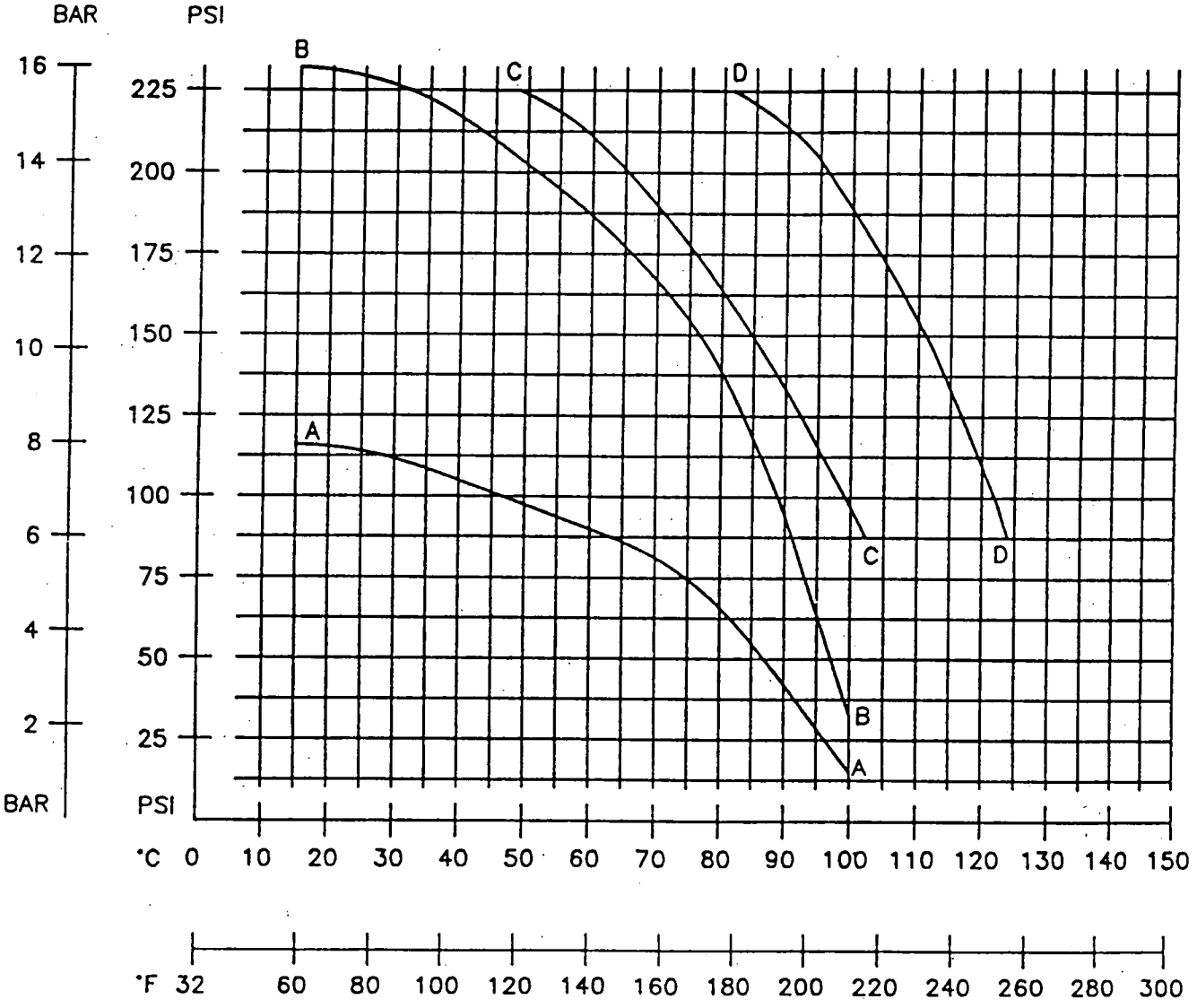

"A" = Low Pressure Thin Web Plates, Std. 100 psi design, Polypropylene
"B" = High Pressure Thick Web Plates, Polyproylene
"C" = High Pressure Thick Web Plates, Glass Filled Polypropylene
"D" = High Pressure Thick Web Plates, Nylon of PVDF (Kynar®)

TEMPERATURE vs. PRESSURE CURVES FOR RECESSED PLATES

Chemical Resistance Guide

Ratings—chemical effect

A—No effect—Excellent.
B—Minor effect—Good.
C—Moderate effect—Fair.
D—Severe effect—Not recommended.

Explanation of footnotes

1. Satisfactory to 72°F.
2. Satisfactory to 120°F.
3. Satisfactory for O-rings.

The chemical resistance information presented has been supplied by chemical resin suppliers. No warranty is expressed or implied. For specific recommendations call JWI, Inc.

	PLASTICS																		ELASTOMERS								METALS & CERAMICS							
	Cycolac® (ABS)	Delrin® (Acetal)	Carbon/graphite	CPVC	Kel-F®	Epoxy	Nylon	PEEK	PES	Noryl® PPO	Ryton® PPS	PVC	Kynar® (PVDF)	Phenolic	Polypropylene	Polyethylene	Poly Sulfone	Teflon® TFE	Thermoplastic Polyester	Tygon	Buna N	EPDM	Hypalon®	Natural rubber	Neoprene®	Nitrile	Silicone	Viton®	Aluminum	Carpenter 20	Cast bronze	Cast Iron	Hastelloy C	Stainless steel (316)	Titanium	Ceramic
Acetaldehyde	D	A[1]	A	D	A	A	A	–	D	–	A	D	D	A	A	C	–	A	–	D	D	A	C	C	C	D	A	D	B	–	A	C	A	A	A	A
Acetamide	–	B	A	–	A	A	A	–	–	–	A	D	C	D	A[1]	A	A	A	–	D	A	A	B	D	B	A	B	B	–	–	D	D	–	A	–	A
Acetate Solvent	–	–	A	C	A	A	A	–	–	D	A	D	A	D	D	A	–	A	–	D	C	A	C	C	D	C	C	D	A	A	C	D	A	A	A	A
Acetic Acid Glacial	D	C	A	C	A[2]	B[1]	D	–	A	A	A	A[1]	A[1]	D	A[1]	A[3]	C	A	A[1]	D	C	B	C	B	D	C	B	D	A	A	C	D	A	A	A	A
Acetic Acid 20%	C	B	A	A	A	A	B	A	A	A	A	A	A	C	A	A	B	A	A	D	B	A	A	B	A	B	B	B	A	A	C	D	A	A	A	A
Acetic Acid 80%	D	C	A	C	A	C	D	B	A	A	A	A	C	D	A	A[3]	B	A	A	D	C[2]	A	C	B	C	C	B	B	A	A	C	D	A	A	A	A
Acetic Acid	D	C	A	C	A	C	D	B	A	A	A	A	C	D	B	A[3]	A	A	A	D	C[2]	A	C	B	C	C	C	B	A	A	C	D	A	A	A	A
Acetic Anhydride	D	D	A	D	A	A	A[1]	–	–	D	A	D	B[1]	A	B[1]	D	D	A	–	D	D	B	A	B	A	D	C	D	A[1]	B	C	–	A	A	A	A
Acetone	D	C	A	D	A	D	A	B	D	D	A	D	D	A	A	B[1]	D	A	C	D	D	A	B	C	C	D	B	D	A	A	A	A	A	A	A	A
Acetyl Chloride (dry)	D	D	–	C	A	A	D	–	–	D	A	C	A[2]	–	–	D	–	A	–	D	D	D	D	D	D	D	C	A	A	B	–	–	A	A	–	–
Acetylene	–	–	A	C	A	A	A	–	–	–	A	A[1]	A	A	A[1]	A	–	A	–	–	B	A	B	B	B	B	B	A	A	A	C	A[1]	–	A	–	A
Acrylonitrile	D	–	B	A	–	A	A	–	–	–	–	–	A[1]	D	A	A	D	A	–	–	D	D	C	D	C	D	D	D	B[1]	A[1]	–	A[1]	B	A[1]	–	A
Alcohols: Amyl	–	A	A	A[2]	A	D	A[1]	–	–	C	A	A[2]	A	A	B[1]	B[2]	C	A	–	B	B	A	A	B	A	B	D	B	B	A	A	–	A	A	B	A
Benzyl	D	A	–	A	A	A[1]	D	–	–	D	A	D	A	A	A	D	D	A	–	B	D	B	B	D	C	D	–	A	B[2]	A	A	A	A	A[1]	A	A
Butyl	–	A	–	A[2]	–	A	A	–	–	A	A	A[2]	–	C	A	A	C[1]	A	–	B	A	B	A	A	A	B	B	A	B	A	A	D	A	A	A	A
Diacetone	–	A	A	–	–	A	A	–	–	A	–	B[1]	A[1]	A	B[2]	B[1]	–	A	–	–	D	A	D	D	D	D	D	D	A[1]	A	A	A	A	A	A	A
Ethyl	B	B	–	A[1]	–	A[2]	A	A	A	A	–	A[2]	–	A	A	B	A	A	A	C	C	A	A	A	A	C	B	A	B	A	A	A	A	A	A	A
Hexyl	–	A	–	–	–	A	A	–	–	A	–	A[2]	–	A	–	A	–	A	–	–	A	C	B	A	A	A	B	C	A	A	A	A	A	A	A	A
Isobutyl	B	A	A	–	–	A	A[1]	–	–	A	–	A[1]	–	C	A[1]	A[2]	–	A[2]	–	–	B	A	A	A	A	B	A	A	B	A	A	C	A	A	B	A
Isopropyl	–	A	A	A[2]	–	A	B[1]	–	–	A[1]	–	A[1]	–	A	A[2]	A[2]	A	A[2]	–	–	B	A	A	A	B	B	A	A	B	A	A	C	B	A	A	A
Methyl	D	C	A	A[1]	A[1]	B[1]	A	A[1]	A	A[1]	A	A[1]	A	A	A[2]	A[1]	B	A	B	–	A	A	A	A	A	A	A	B[2]	A[1]	A	A	A	A	A	B	A
Octyl	–	A	–	–	–	A	A	–	–	A	–	–	–	A	–	A	–	–	–	–	B	A	B	B	B	B	B	B	A	A	A	A	C	A	A	A
Propyl	–	A	A	A[2]	–	A	B	–	–	A[2]	A	A[1]	A[2]	C	A	A[2]	–	A	–	–	A	A	A	A	A	B[2]	A	A	A	A	A	C	A	A	A	A
Aluminum Chloride 20%	–	C	A	A[1]	A	A[1]	D	–	A	A	A	A[1]	A	D	A	B[2]	A[1]	A	–	B	A	A	B	A	A	A	B	A	D	C[1]	D	D	A	C[1]	B	A
Aluminum Chloride	–	–	A	A[2]	A	A[1]	D	–	A	A	A	A[2]	A	–	A	B[2]	A[1]	A	–	B	A	A	B	A	A	A	B	A	A[1]	B[1]	D	D	A	C[1]	B	A
Aluminum Fluoride	–	C	A	A[2]	–	B[1]	A[1]	–	A	A[1]	A	A[2]	A	–	A	A[2]	–	A	–	–	A	A	A	B	A	A	B	A	B[1]	C	–	–	B	C[1]	A	–
Aluminum Hydroxide	–	B	A	A	A[1]	B[1]	A[1]	–	–	A	–	A[2]	A	D	A	A[2]	B	A	A	–	A	A	A[2]	D	A	A[2]	–	A	B[1]	A[1]	C	A	B	C[1]	B[1]	A
Aluminum Potassirm Sulfate 10%	–	C	A	A[2]	A	A[1]	D	–	A	A[2]	–	A[2]	B	–	A	A[2]	–	A	–	B	A	A	A	A	A	A	A	A	C	A	–	D	C	B[2]	A	A
Aluminum Potassirm Sulfate 100%	–	C	A	A[2]	A	A[1]	D	–	A	A[2]	–	A[2]	–	–	A	A[2]	–	A	–	B	A	A	A	A	A	A	A	A	C	B	–	D	C	B[2]	A	A
Aluminum Sulfate	–	C	A	A[2]	A	A[1]	A[2]	–	A	A	A	A[2]	A	A	A	A[2]	–	A	–	B	A	A	A	A	A	A	A	A	B[1]	B	C	D	B	B[1]	A	A
Amines	–	D	A	D	A	A[1]	D	–	–	D	B	D	–	D	–	C[1]	–	A[2]	–	–	D	B	D	B	B	D	B	D	B	B	D	D	C	A	B	A
Ammonia 10%	–	D	A	A	A	A[1]	A	–	A	A[1]	A[1]	B[1]	A	A	A[2]	C[1]	B	A	–	B	A	A	D	D	A	A	–	D	A[1]	A[1]	D	A	A	A[1]	C	A
Ammonia Anhydrous	–	D	A	A	A	A	A[1]	–	–	B[1]	A[1]	A[2]	A	A	A	B[1]	–	A	–	B	B	A	D	D	C	B	D	D	A[1]	A	D	A	B	A[1]	C	A
Ammonia Liquids	–	D	A	A	A	A[1]	B[1]	–	–	–	A[1]	A[2]	A	A	A[2]	C[1]	–	A	–	B	C	A	D	D	A	C	–	D	C	B[2]	D	A	A	A	C	A
Ammonia Nitrate	–	C	–	B	–	A	D	–	–	A	A	B	A	A	A	–	–	A	–	B	C	A	D	–	C	C	–	D	C	A	D	A	–	A	–	A
Ammonium Biflouride	–	D	A	A	–	A[1]	–	–	–	A	–	A[2]	A	A	A	A[2]	–	A	–	–	A	A[2]	–	–	A	A[2]	–	A	B	B	D	D	B	–	–	A
Ammonium Carbonate	–	D	A	A	–	A[1]	A	–	–	A[2]	A	A[2]	A	D	A	B[2]	–	A	–	B	D	A	–	A	A	B	–	–	B	B	D	A	B	B	A	A
Ammonium Casenite	–	D	–	–	–	A	–	–	–	A	–	–	–	D	–	–	–	–	–	–	–	–	–	–	A	–	–	–	–	–	–	–	–	A	–	–
Ammonium Chloride	–	B	A	A[2]	A	A[1]	C	–	A	A	A	A[2]	A	A	A[2]	A[2]	–	A	–	B	B	A	A	A	A	B	–	A	C	B	D	D	A	D	B	A
Ammonium Hydroxide	B	C[1]	A	A	A	A[1]	A	A	A	A	A	A	A	A	A	A[1]	B	A	–	B	D	A	A	D	A	D	A	B	B[2]	A	A	A	B	A[1]	A	A
Ammonium Nitrate	–	C	A	A[2]	A	A[1]	B	–	–	A	A	A[2]	A	D	A	A[1]	–	A	–	B	A	A	A	C	B	A	–	A	B[1]	A	D	A	B	A	A	A
Ammonium Oxalate	–	B	–	–	–	A	–	–	–	–	–	A	–	D	–	–	–	–	–	–	A	–	–	–	A	–	–	–	–	A	D	D	A	A	–	–
Ammonium Persulphate	–	D	A	A	A	A[1]	C[1]	–	–	A[1]	–	A[2]	A[1]	C	A	A[2]	A	A[1]	–	–	D	A	A	A	A	D	–	A	D	B	D	D	B	B	A	A
Ammonium Phosphate, Dibasic	–	B	A	A	A	A[1]	C[1]	–	–	A	–	A[2]	A	A	A	A[2]	–	A[1]	–	–	A	A	A	A	A	A	A	A	B[1]	A[1]	C	C[1]	B	B	A	A
Ammonium Phosphate, Monobasic	–	B	–	A	–	A	B	–	–	A	–	A	–	A	A	A	–	A	–	–	A	A	A	A	A	A	A	A	B	C	D	D	B	C	A	A
Ammonium Phosphate, Tribasic	–	B	–	A	–	A	B	–	–	A	–	A	–	A	A	C	–	A	–	–	A	A	A	A	A	A	A	A	B	–	C	A	B	B	A	A
Ammonium Sulphate	–	–	A	A	A	A[1]	A[1]	–	–	A	A	A[2]	A	A	A	A[1]	–	A	–	–	A	A	A	A	A	A	A	A	A[1]	B	D	C	B	B	A	A
Ammonium Thio-Sulphate	–	B	–	–	–	A	–	–	–	–	–	–	–	A	–	A	–	–	–	–	A	–	–	–	A	A	–	–	–	–	D	D	–	A	A	A
Amyl-Acetate	–	A	A	C[1]	A[1]	A[1]	C[2]	–	B	D	A	C[1]	A[2]	D	B[1]	C[1]	–	A	–	D	D	A	D	D	D	D	D	D	A	A	C	C	A	A	A	A
Amyl-Alcohol	–	A	A	A[2]	A	D	A[1]	–	–	C	A	A[2]	A	A	B[1]	B[2]	–	A	–	B	B	A	A	B	A	B	D	B	B	A	A	–	A	A	B	A
Amyl Chloride	–	A	A	C	A	A[1]	C[1]	–	–	D	–	D	A	–	D	D	D	A	–	C	–	D	D	D	D	B[1]	D	B[1]	A[1]	A[2]	A	–	A[1]	A[2]	C	A
Aniline	D	A[1]	A	C[1]	A[2]	C[1]	C[1]	–	D	D	A	C[1]	A[1]	D	C[1]	B[2]	B	A	–	D	D	B	D	D	D	D	D	C	C	A	C	C	B	B	C	A
Anti-Freeze	B	D	–	A	–	A	D	A	A	A	–	A	–	A	D	–	A	–	A	B	A	–	–	A	C	C	–	A	A	A	A	A	–	A	–	A
Antimony Trichloride	–	–	–	A[2]	A	–	D	–	–	A[2]	–	A[2]	A	–	A	B[2]	–	A	–	–	–	B[1]	–	–	–	–	–	A[2]	D	B	–	–	–	C[1]	B	–
Aqua Regia (80% HCl, 20% HNO_3)	–	D	D	C[1]	A	D	D	C	–	D	D	C[1]	A[1]	D	B[1]	B[1]	–	A	–	D	D	C	C	D	D	D	D	B	D	D	D	–	C	D	A[1]	D
Arochior 1248	–	–	–	–	A[1]	A[1]	A	–	–	–	–	–	–	–	D	C[1]	–	A	–	–	C	B	D	D	D	C	B	A	A	–	–	–	A	B	A[1]	–
Aromatic Hydrocarbons	–	A	–	D	–	A	–	A	C	D	–	D	–	A	D	C	D	–	–	–	C	D	D	D	D	C	D	A	A	–	C	A	–	C	–	–
Arsenic Acid	–	D	A	A[1]	–	A[1]	C[1]	–	–	A[1]	A	A[1]	A	A	A	B[2]	–	A	–	B	A[2]	A[2]	A	B	A	A[2]	A	A[2]	D	A[1]	D	D	B	A[2]	B	A
Asphalt	–	A	A	A[2]	A	A	A	–	–	–	A	A[2]	–	D	B[1]	A[1]	–	A[1]	–	–	B	D	D	D	C	B	D	A	A	A	A	A	–	A	–	A
Barium Carbonate	–	A	A	A[2]	A	A[1]	A[1]	–	A	A[2]	–	A[2]	A	–	A	B[2]	–	A	–	–	A[2]	A	–	–	–	A[2]	–	A	D	B[1]	B	–	B	B	A	A
Barium Chloride	–	A	A	A[1]	A	A[1]	A[2]	–	A	A	A	A[1]	A	A	A	A[1]	–	A	–	B	A	A	A	A	A	A[2]	A	A	D	B	C	C	B	A[1]	A	A
Barium Cyanide	–	B	–	D	–	A	–	–	A	–	–	D	–	–	D	B	–	A[1]	–	–	C	A	–	–	A	C	–	A	C[1]	A[1]	C	–	–	A[1]	–	–
Barium Hydroxide	–	D	A	A	A	A[1]	A[1]	–	A	A[2]	A	A[2]	A	A	B	B[2]	–	A	–	–	A	A	A	A	A	A[2]	A	A	D	B[1]	A	A	B	B	B[1]	A

Delrin, Hypalon, Neoprene, Teflon, Viton—Reg TM E.I. du Pont de Nemours & Co.
Kel-F—Reg TM Minnesota Mining and Mfg. Co.
Ryton—Reg TM Phillips Petroleum Co.
Tygon—Reg TM Norton Co.
Noryl—Reg TM General Electric Co.
Kynar—Reg TM Pennwalt Corp.
Cycolac—Reg Tm Mar-Bon Corp.

Chemical Resistance Guide

Ratings—chemical effect

A—No effect—Excellent.
B—Minor effect—Good.
C—Moderate effect—Fair.
D—Severe effect—Not recommended.

Explanation of footnotes

1. Satisfactory to 72°F.
2. Satisfactory to 120°F.
3. Satisfactory for O-rings.

The chemical resistance information presented has been supplied by chemical resin suppliers. No warranty is expressed or implied. For specific recommendations call JWI, Inc.

	PLASTICS																			ELASTOMERS							METALS & CERAMICS							
	Cycolac® (ABS)	Delrin® (Acetal)	Carbon/graphite	CPVC	Kel-F®	Epoxy	Nylon	PEEK	PES	Noryl® PPO	Ryton® PPS	PVC	Kynar® (PVDF)	Phenolic	Polypropylene	Polyethylene	Poly Sulfone	Teflon® TFE	Thermoplastic Polyester	Tygon	Buna N	EPDM	Hypalon®	Natural rubber	Neoprene®	Nitrile	Silicone	Viton®	Aluminum	Carpenter 20	Cast bronze	Cast iron	Hastelloy C	Stainless steel (316)	Titanium	Ceramic
Barium Nitrate	–	A	A	A	A	A[1]	A[1]	–	A	A	–	A	–	D	A	B[2]	–	A[1]	–	–	A[2]	A	–	–	A	A[2]	–	A	B	B	D	A	–	B	A	A
Barium Sulfate	–	A	A	B[1]	A	C[1]	A[1]	–	A	A[1]	A	B[1]	A	–	B[1]	B[2]	–	A	–	–	A	A	A	A	A	A	A	A	B	B	C	–	A	B[1]	B	B
Barium Sulfide	–	A	A	A[2]	–	B[1]	A[1]	–	A	A[2]	–	A[2]	A	–	B	B[2]	–	A	–	–	A	A	A	A	A	A	A	A	D	A[1]	C	–	–	B[2]	A	A
Beer	–	B	A	A[1]	A	A[1]	A[1]	–	–	A[1]	–	A[1]	A	A	A[1]	A[2]	A	A	–	C	A	A	A	A	A	A	A	A	A	A	A	D	A[1]	A	B	A
Beef Sugar Liquids	B	B	A	A[2]	A	A[1]	A	–	–	A	–	A[2]	–	A	B[1]	A[1]	–	A[1]	–	–	A	A	A	A	A	A	A	A	A	A	C	A	–	A	A	A
Benzaldehyde	B	A	A	D	A	A[1]	C[1]	–	D	D	A	D	A[2]	D	A[1]	A[1]	C	A[1]	–	D	D	A	D	D	D	D	D	D	B	A	A	A	A	B	A	A
Benzene	D	A[1]	A	C[1]	B	C[1]	A	A	A	D	A	C[1]	A[2]	A	C[1]	C[1]	D	A	–	C	D	D	D	D	D	D	D	A	B	A	A	A	B	B	A	A
Benzoic Acid	–	B	A	A	A	A[1]	C	–	A	A[1]	A	A	A	C	C[1]	B[2]	C	A[2]	–	B	D	D	D	D	D	D	B	A	B	B	D	D	B[1]	B	B	B
Benzol	–	A	–	–	A	A[1]	D	–	–	D	A	–	A	A	A	C[1]	–	A	–	–	D	B	B	D	B	D	–	A	B[1]	B	A	A	B	A[1]	–	A
Borax (Sodium Borate)	–	A	A	A	A	A[1]	A	–	–	A[1]	A	B[1]	A	D	B	A[2]	–	A	–	–	D	A	A	D	C	D	B	A	B[1]	A	A	A	B	A	B	A
Boric Acid	–	A	A	A	A	A[1]	B	–	A	A[1]	A	A[2]	A	A	A	A[2]	–	A	–	B	A	A	A	A	A	A	A	A	D	B[2]	B	D	A	A	A	B
Brewery Slop	–	A	–	–	–	A	–	–	–	–	–	–	–	A	–	–	–	–	–	–	A	–	–	–	A	A	–	A	–	A	A	A	–	A	–	A
Bromine	D	D	D	D	A	D	D	D	–	A[1]	D	C[1]	A	D	D	D	–	A	–	B	D	D	D	D	D	D	D	A	D	D	D	–	A	D	A[2]	D
Butadiene	–	A	A	A	A	A[1]	A[1]	–	–	–	A[1]	C[1]	A	–	D	D	–	A[2]	–	–	D	C	B	D	B	D	D	B	A	A	C	–	–	A	–	A
Butane	B	A	A	C[1]	A	A[1]	A[2]	–	A	D	A	C[1]	A	–	C[1]	C[1]	–	A	–	C	A	D	B	D	A	A	D	A	A	A	C	–	A	A[2]	A	A
Butanol (Butyl Alcohol)	–	A	A	A	A[1]	D	B[1]	A	A	A	A	B[1]	A	A	A[1]	A[2]	C	A[2]	–	B	A	B	A	A	A	A	B	A	B	A	A	–	A	A	B	A
Butter	B	A	–	–	–	A	–	–	A	B	–	–	–	D	–	–	A	A	–	B	A	A	B	D	B	A	B	A	A	–	D	D	–	A	–	A
Buttermilk	B	A	A	A[1]	A	A[1]	B[1]	–	A	A	–	A[1]	–	D	A[1]	A[1]	A	A	–	B	A	–	–	D	A	A	–	A	A	–	D	D	A	A	–	A
Butylene	–	A	A	A	B[1]	A[1]	B[1]	–	–	–	A	C[1]	A	A	–	B[1]	–	A	–	–	B	D	D	D	C	B	D	A	A	A	D	–	–	A	–	A
Butylacetate	–	A	A	C[1]	A[1]	B[1]	A	–	B	D	A	D	B[2]	D	B[1]	C[1]	D	A	–	D	D	B	D	D	D	D	D	D	B	B[1]	A	A	A	A	A	A
Butyric Acid	D	C	A	A	A	C[1]	B[1]	–	–	A[1]	A	B[1]	B	D	C	D	–	A[2]	–	C	D	B	D	–	D	D	–	B[1]	B	B	A	D	A[1]	B[2]	A	D
Calcium Bisulfate	–	–	–	–	–	A	–	–	–	–	–	–	–	D	–	–	–	–	–	–	–	–	–	–	A	–	–	–	–	–	C	D	–	A	–	–
Calcium Bisulfide	–	D	–	A[1]	A	A	A	–	–	A	–	A[2]	–	–	A	–	–	A	–	–	A[1]	C	–	–	A	A[1]	–	A	C	B	C	–	–	B	A	A
Calcium Bisulfite	–	D	A	B	A	A[1]	A[2]	–	–	A[1]	A	B	A	–	B	A[1]	–	A	–	–	A	D	A	D	A	A	A	A	D	B[1]	–	–	B	A	A	–
Calcium Carbonate	–	A	A	A	–	A[1]	A	–	–	A[2]	–	A[2]	A	–	A	B[2]	–	A	–	–	A	A	A	A	A	A	A	A	D	B[1]	A	–	B	B	B	A
Calcium Chlorate	–	–	–	A	–	–	–	–	–	–	–	A[2]	–	A	–	–	–	A	–	–	C	A	–	–	–	C	–	A	–	–	–	–	–	–	–	–
Calcium Chloride	B	D	A	A[2]	A	A[1]	A[1]	–	–	A	A	A[2]	A	A	A[2]	B[2]	A	A	–	–	A	A	A	A	A	A	A	A	D	B	A	C	A	B[2]	A	A
Calcium Hydroxide	–	D	A	A[2]	A	A[1]	A[2]	–	–	A[2]	–	A[2]	A	D	A[2]	B[2]	B	A	–	–	A	A	A	A	A	A	A	A	C[1]	B	D	A	A	B	A	A
Calcium Hypochlorite	–	D	A	B[1]	B[1]	A[1]	C[1]	–	A	A	A	B[1]	A	A	A[2]	B[2]	A	A	–	A	C[1]	B[1]	A	D	C	C[1]	B	A	D	B	D	D	B	B	A[1]	A
Calcium Sulfate	C	D	A	A[2]	A	A[1]	D	–	–	A	A	A[2]	A	D	A	B[2]	–	A	–	–	A[2]	A	–	–	C	A[2]	–	A	C	B	A	A	B	B	A	A
Calgon	–	B	–	–	–	A	A	–	–	A	–	–	–	D	A	–	–	–	–	–	A	A	–	–	A	A	–	A	–	–	C	D	–	A	–	A
Cane Juice	–	A	–	A[2]	–	A	A	–	–	–	–	A[2]	–	A	C[1]	–	–	A	–	A	A	A	A	A	A	A	A	A	B	A	A	A	–	A	–	A
Carbolic Acid (see Phenol)	–	D	A	A	A[1]	C[1]	D	–	–	D	A	C	A[2]	D	B[2]	B[1]	–	A	–	C	D	B	C	D	C	D	D	A	B	B	A	D	A	B	A	D
Carbon Bisulfide	–	A	–	A	–	A	A	–	–	–	–	D	–	–	C[1]	–	–	–	–	D	C	D	D	–	D	C	–	A	B	B	B	–	–	B	–	A
Carbon Dioxide	B	A	A	A	A	A[1]	A[1]	–	–	A[1]	A	A	A	A	A[2]	C[1]	A	A	–	–	A	B	B	B	B	A	B	B	B	A	A	D	A	A[1]	A	A
Carbon Dioxide (dry)	B	A	A	A	A	A[1]	A[1]	–	–	A[1]	A	A	A	A	A[2]	C[1]	A	A	–	–	A	B	B	B	B	A	B	B	B	A	A	D	A	A[1]	A	A
Carbon Dioxide (wet)	B	A	A	A	A	A[1]	A[1]	–	–	A[1]	A	A	A	A	A[2]	C[1]	A	A	–	–	A	B	B	B	B	A	B	B	B	A	A	D	A	A[1]	A	A
Carbon Disulfide	–	A[1]	A	C[1]	A	C[1]	B[1]	–	B	A[1]	A	D	B[2]	A	D	C[1]	D	A	–	–	D	D	D	D	D	D	–	A[1]	A	B	D	A	B	B	B	B
Carbon Monoxide	–	A	A	A[2]	–	A[1]	A[1]	–	–	A[2]	–	A[2]	B	A	A	B[2]	A	A	–	–	A	A	A	B	A	A	A	A	A	A	C	D	A	A	–	A
Carbon Tetrachloride	D	B[1]	A	C[1]	A[1]	A[1]	D	A	A	D	A	B[1]	A	A	B[1]	B[1]	A[1]	A	–	C	C	D	D	D	D	C	D	A	D	B	A	C	A[1]	B	A	A
Carbonated Water	–	A	–	A	–	A	A	–	–	A	–	A	–	–	B	A	A	–	A	–	A	–	–	–	A	A	–	A	A	A	C	D	–	A	–	A
Carbonic Acid	–	B[1]	A	A	A	B	A[1]	–	–	A[1]	A	A[2]	A[1]	A	B	B[2]	–	A	–	–	B	A	A	A	A	B	A	A	B[1]	A	A	D	A[1]	A	B[1]	A
Catsup	B	B	–	A	–	A	A	–	–	A	–	A	–	D	A	–	–	–	–	–	A	C	–	–	C	A	–	A	D	A	C	D	–	A	–	A
Chloracetic Acid	–	D	A	B[1]	A[2]	C[1]	D	–	–	–	A	B[1]	A[1]	–	C[1]	C[1]	–	A	–	D	B	B	–	D	D	B	–	D	D	C[2]	–	–	B	A[1]	A[1]	–
Chloric Acid	–	D	D	A	A	–	D	–	–	D	–	A[2]	–	–	–	–	–	A	–	–	–	–	–	–	–	–	–	–	D	A	–	–	A	C[1]	–	–
Chlorinated Glue	–	–	–	–	–	A	–	–	–	–	–	–	–	D	–	–	–	–	–	–	C	B	–	–	D	C	–	A	–	A	A	D	–	A	–	–
Chlorine Anhydrous Liquid	–	A[1]	A	B[2]	B[2]	C[1]	D	D	–	B[1]	D	C[1]	B	D	B	B[2]	D	A	–	C	D	C	C	D	D	D	–	A	D	C	D	C	B	C	B	D
Chlorine, Dry	–	D	A	A[2]	D	–	D	D	–	B[1]	D	A[2]	A	–	C	B	D	A	–	–	D	A	B	D	C	D	D	A	C[1]	A	–	–	B	B	D	–
Chlorine Water	–	D	A	A[2]	A	A[1]	C[1]	D	–	C[1]	D	A[2]	B	–	C	B[1]	C	A	–	–	D	C	C	D	D	D	–	A	D	B	–	–	A	C	A	–
Chlorobenzene (Mono)	D	A[1]	A	D	A[1]	C[1]	B[1]	–	D	D	A	D	A[1]	D	C[1]	C[1]	D	B	–	A	D	D	D	D	D	D	D	A	A	B	A	D	B	B	B	A
Chloroform	D	B[1]	A	D	B[1]	C[1]	D	–	D	D	A	D	A	A	C[1]	C[1]	D	A[1]	–	A	D	D	D	D	D	D	D	A	B[1]	A	D	D	A[1]	A	A[2]	A
Chlorosulfonic Acid	–	D	A	C[1]	A[2]	C[1]	D	–	D	D	D	C	C[1]	D	D	D	–	A	–	C	D	D	D	D	D	D	D	C	C[2]	C	D	D	A[1]	B[2]	A	C
Chocolate Syrup	–	A	–	–	–	A	A	–	–	A	–	–	–	D	A	–	–	A	–	–	A	–	–	D	A	A	–	A	A	–	D	D	–	A	–	A
Chromic Acid 5%	B	B[1]	A	A	A	B[1]	D	A	A	A[1]	A	A	A	C	A	B	D	A	–	B	D	A	B	B	D	D	C	A	C	B[1]	D	D	B	A	A	C
Chromic Acid 10%	B	B[1]	A	A[2]	A	C[1]	D	A	A	A[1]	A	A[2]	A	D	A	A[2]	D	A	–	C	D	C	B	D	D	D	C	B	D	B	D	D	B	B	B	C
Chromic Acid 30%	C	C	A	B[2]	A	C[1]	D	A	A	D	B	B[2]	A[2]	C	A[2]	A[2]	D	A	–	B	D	B	B	D	D	D	C	A	D	B[2]	D	D	B	B[2]	A	D
Chromic Acid 50%	C	D	A[1]	C[2]	A[2]	D	D	–	A	D	A[1]	C[2]	A[2]	C	B[1]	A[2]	D	A	–	B	D	B	B	D	D	D	C	A	D	C[1]	D	D	B[1]	B[2]	A[2]	D
Cider	–	B	–	–	–	A	–	–	–	A	–	A	–	D	A	B	A	–	–	–	A	–	–	–	A	A	–	A	B	A	A	D	–	A	–	A
Citric Acid	C	B[1]	A	B[2]	A[2]	A[1]	A[1]	–	A	A[1]	A	B[2]	A	A	A	A[1]	A	A	–	–	A	A	A	A	A	A	A	A	C	A[2]	C	D	A	A[2]	A[2]	A
Citric Oils	–	B	–	–	–	A	–	–	–	A	–	–	–	D	A	–	–	–	–	–	A	–	–	–	D	A	–	A	C	A	D	D	–	A	–	A
Clorox (Bleach)	B	D	–	A	D	A	A	–	–	A	C	A	–	D	D	–	A	A	–	B	B	B	B	D	B	B	–	A	A	–	D	D	A	A	–	A
Coffee	–	A	–	A	–	A	A	–	–	A	–	–	–	–	A	–	A	–	–	–	A	A	A	A	A	A	A	A	A	A	D	–	A	A	A	A
Copper Chloride	–	B	–	A	–	A	A	–	–	A	A	A	–	D	A	B	A	A	–	B	A	A	A	A	A	A	A	A	D	B	D	D	–	D	A	A

Delrin, Hypalon, Neoprene, Teflon, Viton—Reg TM E.I. du Pont de Nemours & Co.
Kel-F—Reg TM Minnesota Mining and Mfg. Co.
Ryton—Reg TM Phillips Petroleum Co.
Tygon—Reg TM Norton Co.
Noryl—Reg TM General Electric Co.
Kynar—Reg TM Pennwalt Corp.
Cycolac—Reg Tm Mar-Bon Corp.

Chemical Resistance Guide

Ratings—chemical effect

A—No effect—Excellent.
B—Minor effect—Good.
C—Moderate effect—Fair.
D—Severe effect—Not recommended.

Explanation of footnotes

1. Satisfactory to 72°F.
2. Satisfactory to 120°F.
3. Satisfactory for O-rings.

The chemical resistance information presented has been supplied by chemical resin suppliers. No warranty is expressed or implied. For specific recommendations call JWI, Inc.

	PLASTICS																			ELASTOMERS								METALS & CERAMICS							
	Cycolac® (ABS)	Delrin® (Acetal)	Carbon/graphite	CPVC	Kel-F®	Epoxy	Nylon	PEEK	PES	Noryl® PPO	Ryton® PPS	PVC	Kynar® (PVDF)	Phenolic	Polypropylene	Polyethylene	Poly Sulfone	Teflon® TFE	Thermoplastic Polyester	Tygon	Buna N	EPDM	Hypalon®	Natural rubber	Neoprene®	Nitrile	Silicone	Viton®	Aluminum	Carpenter 20	Cast bronze	Cast Iron	Hastelloy C	Stainless steel (316)	Titanium	Ceramic
Copper Cyanide	–	B	A	A[1]	–	B[1]	A[1]	–	–	A[1]	A	A[2]	A	A	A	B[2]	–	A	–	–	A	A	A	A	A	A	A	A	D	B	C	D	B	B	B	A
Copper Fluoborate	–	B	–	–	–	A	–	–	–	–	–	A	–	A	–	–	–	–	–	–	B	–	–	–	A	B	–	A	–	–	D	D	B	D	–	–
Copper Nitrate	–	D	A	A	A	A[1]	D	–	–	A[1]	A	B[2]	A	–	A	B[2]	–	A	–	–	A	–	–	–	A	A	–	A	D	B	D	–	A[1]	B	B	A
Copper Sulfate 5%	–	D	A	A	A	A[1]	C[1]	–	A	A[1]	A	A[2]	A	A	A	B[2]	–	A	–	–	A	A	A	B	A	A	A	A	D	A	C	D	A	B	A	A
Copper Sulfate5%	–	D	A	A	A	A[1]	C[1]	–	A	A[1]	A	A[2]	A	A	A	B[2]	–	A	–	–	A	A	A	B	A	A	A	A	D	B	C	D	A	B	A	A
Cream	–	A	–	A	–	A	A	A	–	A	–	–	–	A	A	–	–	A	–	–	A	–	–	–	C	A	–	A	A	A	D	D	–	A	–	A
Cresols	D	D	A	D	A[1]	A[1]	D	–	D	D	A	D	A[2]	D	D	C[1]	–	–	–	D	D	D	D	D	D	D	D	A	A	A	C	C	B[2]	A	B	A
Cresylic Acid	–	D	A	A	–	A[1]	D	–	–	–	–	C[1]	B[1]	D	D	B[1]	–	A	–	–	D	D	D	D	D	D	D	A	B	A[1]	C	C	B[1]	A	A[1]	A
Cyanic Acid	–	D	A	–	–	A[1]	–	–	–	–	–	–	–	D	–	–	–	A	–	–	C	–	–	–	C	C	–	A	–	–	D	D	–	A	–	–
Cyclohexane	–	A[1]	A	B[1]	A	A[1]	A	–	A	D	A	B[1]	A	D	C[1]	B[1]	A[1]	A	–	D	A	D	D	D	D	A	D	A	A	A	D	A	B	A	A	A
Detergents	B	A[1]	A	A	A	A[1]	A[1]	–	–	A[1]	A	A	–	–	B[1]	A[1]	–	A	–	–	A	A	B	B	B	A	A	A	B	–	A	–	B	A[1]	A[2]	A
Dichloroethene	–	A[1]	A	D	A[2]	B[2]	C[1]	–	D	A[1]	–	D	A[1]	–	A[1]	C[1]	–	A[1]	–	D	–	–	–	D	D	–	–	C	–	A	–	–	A	B	B[1]	–
Diesel Fuel	–	A	A	A[2]	A[1]	A[1]	A	A	B	D	A	A[2]	A	–	A[1]	C[1]	–	A	A[1]	–	A	D	B	D	B	A	D	A	A	–	A	A	B	A	B	A
Diethylamine	–	B	A	D	A	A	A	–	A	–	–	D	A[1]	–	B[2]	D	–	A	–	A	C	B	C	B	C	C	B	D	B[1]	–	A	–	–	B[1]	D	A
Diethylene Glycol	B	A	A	–	–	C	A[1]	–	–	A[1]	–	C[1]	–	–	A[2]	B[2]	B	A[2]	–	A	A	A	A	A	A	A	B	A	B[1]	–	A	A	B	A[2]	A	A
Diphenyl Oxide	–	D	–	–	–	A	–	–	–	–	A	D	B[2]	–	D	–	–	A[1]	–	A	A	D	D	D	D	A	C	A	B[1]	–	A	A	B[1]	B[1]	A[1]	A
Dyes	–	C	–	–	–	A	A	–	–	A	–	B	–	–	–	–	–	–	–	C	–	–	–	–	C	–	–	A	B	–	C	–	–	A	–	–
Epsom Salts (Magnesium Sulfate)	–	B	A	A[2]	A	A	A[1]	–	A	A[1]	A	A[2]	A	A	A	A[2]	–	A	–	B	A	A	A	B	A	A	A	A	B[1]	A	C	A	B	B	A[1]	A
Ethane	–	–	A	–	–	A[1]	D	A	A	–	–	D	A	–	C[1]	–	–	A	–	A	A	D	B	D	B	A	D	A	–	–	A	–	–	A[1]	–	A
Ethanolamine	–	D	A	–	D	A[1]	A	–	–	A	A	D	C[1]	A	B	–	A[1]	A	–	–	B	B	C	B	B	B	B	D	B	A	A	–	B	A	B	A
Ether[3]	–	A[1]	A	D	B[1]	A[1]	A	–	–	D	A	D	B[1]	D	D	C[1]	D	A	–	C	D	C	D	D	D	D	D	C	B[1]	A	A	C	B[1]	B[1]	A[1]	A
Ethyl Acetate	C	A	A	D	A[1]	C[1]	A[2]	A	D	D	A	C[1]	A[1]	A	B	C[1]	D	A	B	D	D	B	D	C	D	D	B	D	B[1]	A	A	A	B	A[1]	A	A
Ethyl Chloride	D	A[1]	A	D	B	A[1]	A[1]	–	–	D	A	D	A	D	C[1]	C[1]	D	A	–	D	A	A	D	B	B	A	D	A	B	A	A	C	B[1]	A	C	A
Ethyl Sulfate	–	–	A	–	A	A[1]	–	–	–	–	–	–	–	–	–	–	–	A	–	–	A	–	–	–	–	A	–	A	–	D	A	–	–	D	–	A
Ethylene Chloride	–	A[1]	A	D	A[1]	B[1]	B[1]	–	–	D	A	D	A	–	C[1]	C[1]	D	A	–	–	D	D	D	D	D	D	D	B	B[1]	A	–	–	–	A[1]	B[1]	A
Ethylene Dichloride	D	B[1]	A	D	A[1]	C[1]	B[1]	–	–	D	A	D	A	D	C[1]	C[1]	–	A	–	D	D	C	D	D	D	D	D	A	B[2]	A[1]	C	A	B	A[1]	B	A
Ethylene Glycol	B	B	A	A	A	C[1]	B[1]	A	A	A[1]	A	A[1]	A	A	A[2]	A[1]	A	A	A	B	A	A	A	A	A	A	A	A	B[1]	A	A	A	B[1]	A[1]	A[1]	A
Ethylene Oxide	–	–	A	C[1]	A	A[1]	A[1]	–	–	A[1]	D	C[1]	A	D	C[2]	C[1]	–	A	–	–	D	C	D	D	D	D	D	D	D	A[1]	A	D	–	C[1]	–	A
Fatty Acids	–	A[1]	A	B[1]	A	A[1]	A[1]	–	–	A[1]	–	B[1]	A	D	B[2]	A	–	A	–	B	B	D	D	C	B	B	C	A	A	A	C	C	A	A	B	A
Ferric Chloride	–	D	A	A	A[1]	A[1]	C[1]	–	A	A	A	A[2]	A	A	B[1]	A[1]	–	A	–	B	A	A	B	A	B	A	B	A	D	D	D	D	B[2]	C[1]	A	A
Ferric Nitrate	–	D	A	A	A	A[1]	A[1]	–	–	A[1]	A	A[2]	A	–	B	B[2]	–	A	–	–	A	A	A	A	A	A	C	A	C[1]	A	D	–	B[1]	A[1]	A	A
Ferric Sulfate	C	D	A	A	A	A[1]	A[1]	–	–	A[1]	A	A[2]	A	D	B	A[2]	–	A	–	B	A	A	A	A	A	A	B	A	C[1]	A	D	D	A[1]	A[1]	A[1]	A
Ferrous Chloride	–	D	A	A	B[1]	A[1]	C[1]	–	–	A[1]	A	A[2]	A	A	A	A[1]	–	A	–	B	A	–	A	A	A	A	–	A	D	C[1]	C	D	B[1]	C[1]	A	A
Ferrous Sulfate	–	D	A	A	A	A[1]	C[1]	–	–	A[1]	A	A[2]	A	–	A	A[1]	A	A	–	B	A[2]	A	–	–	–	A[1]	–	–	A[1]	B	D	D	B	B	A[1]	A
Fluoboric Acid	–	–	A	A[2]	–	A	D	–	–	B[1]	A	A[2]	A[1]	A	A	B[2]	–	A	–	B	A	A[2]	A	A	A	A	–	–	D	B[1]	D	D	A[1]	C	D	D
Fluorine	–	–	C	A[1]	A	D	D	–	–	–	D	D	A[1]	–	D	C[1]	–	A	–	–	–	A[1]	–	–	–	–	D	B	D	C	D	D	B[1]	C	D	–
Fluosilicic	–	–	A	A[2]	C	C	D	–	–	B[2]	A	A[1]	A[1]	–	A	B[1]	–	A	–	B	A	A[2]	A	A	A	A	–	–	C	B[2]	D	D	B	B[1]	D	D
Formaldehyde 40%	–	A[1]	A	A[1]	A	A[1]	C[1]	–	A	A	A	A[1]	A[2]	–	A[1]	A[2]	A	A	–	–	B	A	–	–	B	B	–	A	B	A	A	B	B	A[1]	B	A
Formaldehyde 100%	B	A	–	A	A	A	D	–	A	–	B	A	A	B	C	B	A	A	–	B	C	A	C	B	C	C	B	D	A	–	A	C	A	A	A	A
Formic Acid	B	D	A	A[1]	A[1]	C[1]	C[1]	–	A	A	A	A[1]	A[2]	C	A[1]	B[2]	–	A	–	B	B	A	A	A	A	B	B	C	B[1]	A[1]	C	D	A	C	C[1]	A
Freon 11	C	D	–	A[2]	–	A	D	–	–	–	D	A[2]	C	–	D	C	C	A	–	D	B	D	A	D	D	B	D	A	–	–	A	C	A	A	B	A
Freon 12	C	B	–	A[2]	C	A	D	–	–	–	D	A[2]	A	–	D	C	C	A	–	D	A[1]	D	A	B	A	A	D	B	A	–	A	A	A	–	B	A
Freon 22	–	A	–	B	–	A	B	–	–	–	D	B	D	–	A	–	C	A	–	D	D	A	A	A	A	D	D	–	–	–	A	C	A	–	A	A
Freon 113	–	A	–	B	–	A	–	–	–	–	D	B	C	–	D	–	–	A	A	D	A	D	A	D	A	A	D	B	–	–	A	–	A	–	C	A
Freon TF	–	A	–	B	–	A	D	–	–	–	D	B	B	–	D	–	–	D	–	D	A	D	A	D	A	A	D	B	D	–	A	–	A	–	B	A
Fruit Juice	B	A	–	A	A	A	A	–	–	A	–	A	A	D	A	–	A	A	–	B	A	–	–	D	A	A	–	A	A	–	C	D	A	A	A	A
Fuel Oils	D	B	A	–	A	A[1]	A[1]	A	–	A[1]	A	A[2]	B	–	C[1]	C[1]	–	A	A	B	B	D	D	D	C	B	C	A	C[1]	A	A	A	A[1]	A	A	A
Furan Resin	–	D	–	–	A[1]	A[1]	–	–	–	–	A	A	D	A	D	D	–	A	–	A	D	C	D	D	D	D	D	–	A	–	A	–	–	A	–	–
Furfural	D	D	A	D	B[1]	A[1]	B	–	–	D	A	D	B[2]	D	D	C[1]	D	A	–	A	D	B	D	D	D	D	D	A	A[1]	B	A	A	B	B	A[1]	A
Gallic	–	–	B	C	–	–	B[1]	–	–	–	A	A[2]	A[1]	–	A	B[2]	–	A	–	A	B	B	B	A	B	B	–	A	C[1]	B	A	–	B[1]	B	A	–
Gasoline	D	B	A	C[1]	A	A	A	A	–	D	A	C[1]	A	A	C[1]	C[1]	C	A	A	A	A	D	B	D	B	A	D	A[1]	A[2]	A	A	A	A	A	B	A
Gelatin	–	A	A	A[2]	–	B	A[1]	–	–	A[2]	–	A[2]	A	D	A	A[2]	–	A	–	A	A	A	A	A	A	A	A	A	B[2]	A	A	D	A	A[2]	A	A
Glucose	B	A	A	A[2]	–	B	B[1]	–	–	A[2]	B	A[2]	A	A	A	A[2]	A	A	–	A	A	A	A	A	A	A	A	A	A	–	A	A	A	A	A	A
Glue, P.V.A.	–	A	B	A	–	A	A[1]	–	–	–	–	C	–	–	–	A[1]	A	A	–	C	A	A	A	A	A	A	A	A	C	A	A	A	A	A[2]	A	A
Glycerin	C	A	A	A	A	A	A[1]	–	A	A	A	A[1]	A	A	A	A[1]	A	A	A	A	A	A	A	A	A	A	A	A	A	A	A	A	A	A	A	A
Glycolic Acid	B	A	A	A	A[1]	A	–	–	–	–	A	A[2]	A[1]	–	A	A[2]	–	A	–	–	A	A	A	A	A	A	A	A	–	–	–	–	–	A	B[1]	A
Gold Monocyanide	–	A	–	–	–	A	–	–	–	–	–	–	A	A	–	–	–	D	–	A	A	–	–	–	A	A	–	A	–	–	A	D	–	A	–	A
Grape Juice	B	A	–	A	–	A	A	–	–	–	–	B	A	A	–	B	–	D	–	B	A	–	–	–	A	A	–	A	–	A	C	D	–	A	A	A
Grease	–	D	–	–	–	A	–	–	–	–	–	A	A	D	–	–	–	A	A	B	D	–	–	–	D	D	–	A	–	A	A	A	A	A	A	A
Heptane	D	A	B	A	A	A	A	A	A	A[1]	A	C[1]	A	D	C[2]	B[1]	A[1]	A	–	–	A	D	A	D	A	A	D	A	A	A	A	A	A	A	A	A
Hexane	–	A	A	B[1]	A	B	A[1]	A	A	–	A	B[1]	A	D	B[1]	C[1]	A[1]	A	–	–	A	D	B	D	B	A	D	A	A	A	A	A	A	A	A	A
Honey	–	A	–	–	–	A	A	–	–	–	–	A	A	D	A	B	A	A	–	A	–	–	–	–	–	–	–	A	A	A	A	A	A	A	–	A
Hydraulic Oil (Petro)	–	B	B	–	–	A	A[1]	–	–	–	D	A	A	D	D	C	–	A	–	A	A	D	B	D	B	A	C	A	A	A	A	A	A	A	–	A

Delrin, Hypalon, Neoprene, Teflon, Viton—Reg TM E.I. du Pont de Nemours & Co.
Kel-F—Reg TM Minnesota Mining and Mfg. Co.
Ryton—Reg TM Phillips Petroleum Co.
Tygon—Reg TM Norton Co.
Noryl—Reg TM General Electric Co.
Kynar—Reg TM Pennwalt Corp.
Cycolac—Reg Tm Mar-Bon Corp.

Chemical Resistance Guide

Ratings—chemical effect

A—No effect—Excellent.
B—Minor effect—Good.
C—Moderate effect—Fair.
D—Severe effect—Not recommended.

Explanation of footnotes

1. Satisfactory to 72°F.
2. Satisfactory to 120°F.
3. Satisfactory for O-rings.

The chemical resistance information presented has been supplied by chemical resin suppliers. No warranty is expressed or implied. For specific recommendations call JWI, Inc.

	PLASTICS																			ELASTOMERS								METALS & CERAMICS							
	Cycolac® (ABS)	Delrin® (Acetal)	Carbon/graphite	CPVC	Kel-F®	Epoxy	Nylon	PEEK	PES	Noryl® PPO	Ryton® PPS	PVC	Kynar® (PVDF)	Phenolic	Polypropylene	Polyethylene	Poly Sulfone	Teflon® TFE	Thermoplastic Polyester	Tygon	Buna N	EPDM	Hypalon®	Natural rubber	Neoprene®	Nitrile	Silicone	Viton®	Aluminum	Carpenter 20	Cast bronze	Cast iron	Hastelloy C	Stainless steel (316)	Titanium	Ceramic
Hydraulic Oil (Synthetic)	–	–	B	–	–	A	A[1]	–	–	–	–	A	A	–	D	A	–	A	–	A	–	–	–	–	–	–	–	A	A	A	A	–	A	A	–	A
Hydrazine	–	B	–	D	–	A	–	–	–	–	–	–	A	A	C	–	–	C	–	–	B	A	B	–	B	B	C	A	–	–	D	C	–	A	–	A
Hydrobromic Acid 20%	–	C	A	A	A	B[1]	D	–	–	B	–	B[2]	A	D	A[2]	B[2]	A	–	–	B	D	A	A	A	B	D	D	A	D	–	D	C	A[1]	D	A	–
Hydrobromic Acid 100%	B	D	A	A[2]	A	D	D	–	–	B	A[1]	A[1]	A	D	C[1]	B[1]	–	A	–	B	D	A	A	A	D	D	D	A	D	–	D	D	C	D	A	A
Hydrochloric Acid, Dry Gas	–	–	A	A	A	A	A[1]	A	–	A	A	A[2]	A	–	B	A[2]	–	A	–	–	–	–	–	–	–	–	–	–	D	A	D	–	A	D	C	A
Hydrochloric Acid 20%	A	C	A	A[2]	A	A[1]	D	A	A	A	A	A[2]	A	A	B[2]	A[2]	A	A	A[1]	B	–	–	–	–	–	–	–	A	D	D	D	D	A[1]	D	C	A
Hydrochloric Acid 37%	A	C	A	A[2]	A	A	D	A	A	A	A	B	A	C	C	B[2]	A	A	–	C	B	A	A	B[1]	B	B	B	A	D	D	D	D	–	D	C	A
Hydrochloric Acid 100%	A	C	A	A	A	–	D	A	A	A	A[1]	B[2]	A	–	B[1]	–	A[2]	A	–	–	D	C	D	D	D	D	D	A	D	D	D	D	B[2]	D	D	A
Hydrochloric Acid	B	B	A	A	–	A	C[1]	–	–	A[1]	B	A[1]	A	D	A	A[2]	–	A	–	B	B	A	–	–	A	B	–	A	B[1]	A	D	D	A[1]	B[1]	B	A
Hydrocyanic Acid (Gas 10%)	–	C	–	A	–	–	–	–	–	C	–	A	–	–	A	–	–	A	–	–	B	A	–	–	A	B	–	A	–	–	D	–	–	–	A	–
Hydrofluoric Acid 20%	C	D	A	C[1]	A[1]	A	C[1]	–	–	C[1]	A	B	A	D	A[2]	A[2]	–	A	–	D	B[1]	A[1]	A[1]	B[1]	A[1]	B[1]	D	A[1]	D	B[2]	D	D	A	D	D	C
Hydrofluoric Acid 50%	C	D	A	C[1]	A[1]	C[2]	D	–	–	D	A	B[1]	A	D	A[2]	A[1]	C	A	–	D	B[1]	A[1]	A[1]	B[1]	A[1]	B[1]	D	A[1]	D	B[2]	D	D	B[2]	D	D	D
Hydrofluoric Acid 75%	C	D	A[2]	C[1]	A[1]	B[1]	D	–	–	D	B	C	A	D	C[1]	C[1]	–	A	–	D	D	C	A	D	D	D	D	A[1]	D	B[1]	D	D	B[2]	D	D	D
Hydrofluoric Acid 100%	D	D	–	C[1]	–	–	D	–	–	D	D	C	A	D	C[1]	–	–	A	–	D	D	C	A	D	D	D	D	A[1]	D	B[1]	D	D	A[1]	B[1]	B	A
Hydrofluosilicic Acid 20%	–	B	A	A	A	C[1]	D	–	–	B[2]	A	A[2]	A	D	A	B[2]	–	A	–	A	A	A	–	–	C	A	–	D	D	B[2]	D	D	B	B[1]	D	A
Hydrofluosilicic Acid 100%	–	A	A	–	A	C[1]	D	–	–	B[2]	A[1]	B[1]	A[1]	–	A	B[1]	–	A	–	D	B	A	A	A	B	B	D	A	D	B[2]	D	D	B	C[2]	D	A
Hydrogen Gas	–	–	A	A[2]	A	–	A[2]	–	–	A[1]	A	A[2]	A	–	A	A[2]	A	A	–	A	A	A	A	B	A	A	C	A	A	A	A	–	A	A	A	–
Hydrogen Peroxide 10%	A	D	C	A	A	C[1]	C[1]	A	A	A[2]	A	A[1]	A	D	B[1]	A[2]	A	A	–	D	–	–	–	–	–	–	B	A	A	B[1]	C	C	A	B	B[1]	A
Hydrogen Peroxide 30%	–	D	C	A	A	B	D	A	A	A[2]	A[1]	A[1]	A	D	B[1]	C[2]	A	A	–	–	–	–	–	–	–	–	B	A	A	B[1]	B	B	A	B	B[1]	–
Hydrogen Peroxide 50%	–	D	C	A	A	–	D	–	A	–	–	A[1]	A[1]	D	B[1]	C[2]	A	A	–	–	–	–	–	–	–	–	B	A	A	B[1]	B	–	A	A[2]	B[1]	–
Hydrogen Peroxide 100%	B	D	C	A	A	A	D	–	A	A	C	C[2]	A[1]	D	B[1]	C[2]	A	A	–	D	B	A	B	B	B	A	B	A	B	B[1]	B	D	A[2]	B[1]	–
Hydrogen Sulfide (Aqua)	B	C	A	A	A[1]	A	C[1]	–	B	A[1]	A	B[1]	A	D	A[1]	A	–	A	–	D	D	A	B	D	A	D	C	D	B	A	D	D	A[1]	C[1]	A	A
Hydrogen Sulfide (Dry)	–	–	A	A	A[1]	A	C[1]	–	A	–	A	A[2]	A[1]	D	A[1]	A	–	A	–	D	A	A	A	A	A	A	C	D	B	B	D	D	A[1]	B	A	–
Hydroxyacetic Acid 70%	–	A	–	A	–	A	–	–	–	–	–	D	A	–	–	–	–	–	–	–	A	A	–	–	A	A	–	A	–	–	D	B	–	–	A	A
Ink	B	A	–	–	–	A	C	–	–	–	–	C	A	–	–	–	–	D	–	C	A	–	–	D	A	A	–	A	–	–	D	D	–	C	–	A
Iodine	D	D	A	D	A	C	D	–	B	C[1]	D	D	A[2]	–	C	A[1]	–	A	–	D	B	B	B	–	D	B	–	A	A	A	D	D	B	C	C	D
Iodine (in Alcohol)	–	D	–	–	–	–	C	–	B	–	–	–	A	–	–	B	–	–	–	–	–	–	–	–	–	–	–	–	B	B	–	–	D	–	D	–
Iodoform	–	–	–	–	–	–	–	–	–	–	–	A	C	–	–	–	–	C	–	C	–	A	–	B	A	–	–	–	–	–	A	–	A	B	–	–
Isotane	–	–	–	–	–	A	D	–	A	–	–	A	A	–	D	–	A[1]	–	A	–	A	–	–	–	D	A	–	A	D	–	–	–	–	–	–	–
Isopropyl Acetate	–	D	A	–	–	A	B[1]	–	–	–	–	D	D	–	B[1]	B[1]	–	A	–	–	D	B	D	D	D	D	D	D	B	A[1]	B	–	B	A	–	A
Isopropyl Ether	–	D	A	–	A	D	A[1]	–	–	–	–	B	D	–	B	A	–	A[1]	–	A[1]	B	D	C	D	C	B	D	D	A	A	A	–	A	A	–	A
Jet Fuel (JP3, -4, -5)	–	A[1]	A	–	A	A	A[1]	A	A	D	A	A[1]	A	D	A[1]	B	C	A	–	A	A	D	D	D	D	A	D	A	A	A	A	A	A	A	A	A
Kerosene	D	A[2]	A	–	A	A	A	A	A	D	A	A[2]	A	A	A[1]	C[1]	C	A	A	A	A	D	D	D	C	A	D	A	A	A	A	A	A	A	A	C
Ketones	D	D	A	–	B[1]	C	A[1]	–	–	D	A	B	C[1]	–	C	C[1]	D	A	–	A	D	D	–	A	D	D	–	D	A	A	A	–	A	A	A	A
Lacquers	–	D	A	–	–	A	A[1]	–	–	D	–	C	D	A	C	B[1]	–	A	–	A	D	D	D	D	D	D	D	D	A	A	A	C	A	A	–	A
Lacquer Thinners	–	D	A	–	–	A	A[1]	–	–	D	–	C	–	A	C	B[1]	–	A	–	–	D	D	D	D	D	D	D	D	A	A	A	C	A	A	C	–
Lactic Acid	B	B	A	A[1]	A[1]	B[1]	C[1]	–	A	A	A	B[1]	B[1]	D	A[1]	A[1]	A	A	–	B	A	A	A	A	A	A	A	A	B	B[2]	C	D	B[1]	B[1]	B	A
Lard	–	B	A	–	–	B	A[1]	–	–	A	–	A[1]	A	D	B[1]	B[1]	A	A	–	A	A	D	D	D	C	A	B	A	A	A	A	A	A	A	A	A
Latex	B	C	–	–	–	A	A[1]	–	–	–	–	–	A	D	A[2]	–	–	A	–	A	A	A	–	–	A	A	–	A	A	–	A	–	A	A[2]	–	–
Lead Acetate	B	D	A	A[2]	A	A	B[1]	–	A	A[1]	A	A[2]	A	–	A[1]	A[2]	–	A	–	B	B	A	D	A	B	B	D	D	D	B[1]	A	A	B[1]	B[1]	A[1]	A
Lead Sulfamate	–	A	–	–	–	A	B[1]	–	–	–	–	A[2]	A	–	A[2]	A[1]	–	A[1]	–	–	B	A	A	B	A	B	B	A	C	–	–	–	–	C	–	–
Ligroin	–	B	–	–	–	A	D	–	–	–	–	–	A	–	A[2]	C[2]	–	–	–	–	A	D	C	D	B	A	D	A	D	–	A	–	–	A	–	–
Lime	–	B	A	–	–	A	A[1]	–	–	–	–	A[1]	A	D	–	B[1]	–	A[1]	–	A	A	D	–	–	A	A	–	A	D	–	A	A	–	A	A	A
Lubricants	–	A	A	–	–	A	A[1]	–	–	C[1]	A	B[2]	A	A	A[1]	D	A[1]	A	–	B	A	D	D	D	B	A	D	A	A[2]	A[2]	A	A	A	A[2]	A	A
Magnesium Carbonate	B	A	–	A[1]	–	A	–	–	–	A[2]	–	A[2]	A	–	A	A[2]	–	A[1]	–	–	A[1]	A	–	–	–	A[2]	–	A	B	A	A	–	–	A[1]	A	–
Magnesium Chloride	B	A	A	A	A	A	A[1]	–	–	A	A	A[2]	A	A	A	A[2]	–	A	–	B	A	A	A	A	A	A	A	A	D	B	C	D	A[2]	A[1]	A	–
Magnesium Hydroxide	B	A	A	A	A	A	B[1]	–	–	A[2]	A	A[2]	A	D	A	A[2]	–	A	–	C	B	A	A	B	B	B	A	A	C[1]	B	A	A	B[1]	A[1]	A	A
Magnesium Nitrate	B	A	–	A	–	A	A[1]	–	–	A[1]	A	A[2]	A	A	A	A[2]	–	A	–	–	A	A	–	–	A	A	–	A	C	A	D	D	A	A[1]	A	–
Magnesium Oxide	–	A	–	–	–	A	–	–	–	–	–	–	–	D	–	–	–	–	–	–	A	–	–	–	A	A	–	C	–	–	A	A	–	A	–	–
Magnesium Sulfate	B	A	A	A	A	A	A[1]	–	A	A[1]	A	A[2]	A	A	A	A[2]	–	A	–	B	A	A	A	B	A	A	A	A	B[1]	A	A	A	A[2]	B	A	A
Maleic Acid	–	A	A	A	–	A	B[1]	–	–	A[1]	B	A[2]	A	–	A	B[2]	A[1]	A	–	C	D	D	D	D	D	D	–	A	B[1]	B	A	A	B	B	A	A
Maleic Anhydride	–	D	–	–	–	A	–	–	–	–	–	–	A	–	D	–	–	–	–	–	D	D	D	D	D	D	–	A	A	–	–	–	–	–	–	A
Malic Acid	–	A	A	–	–	–	C[1]	–	–	–	–	A[2]	A	–	A[1]	B[2]	–	A	–	D	A	D	B	A[1]	B	A	B	A	B[1]	B[1]	A	–	B	A[2]	A	–
Mash	–	A	–	–	–	A	A	–	–	–	–	–	–	–	–	–	–	–	–	A	A	A	–	–	A	A	–	A	A	–	A	–	–	A	–	–
Mayonnaise	–	–	–	–	–	A	A	–	–	–	–	D	A	–	–	B	A	D	–	D	C	–	–	D	A	C	–	A	A	–	D	D	A	A	–	A
Melamine	–	–	–	A[2]	–	A	A	–	–	–	–	A[2]	–	D	A	–	–	A	–	D	C	A	–	–	D	C	–	A	–	–	D	D	–	D	–	A
Mercuric Chloride (Dilute)	–	B	C	A	A	A	D	–	A	A[2]	A	A[2]	A	A	A	A[2]	–	A	–	D	A	A	A	A	A	A	–	A	D	D	D	D	C	C	A[1]	A
Mercuric Cyanide	–	–	A	A	A	A	A	–	–	A[2]	–	B[2]	A	–	A	A[2]	–	A	–	D	A	–	–	D	A	A	–	A	D	A	D	–	–	B	A	A
Mercury	B	A	C	A	A	A	A[2]	–	A	A[1]	–	B	A	D	B	A[2]	–	A	–	D	A	A	A	A	A	A	–	A	–	A	D	A	A[2]	A	A	A
Methanol (Methyl Alcohol)	B	A	A	A	A[2]	B[1]	C[1]	A	A	A[1]	A	A[1]	A	A	A	A[1]	A	A	B	A	A	A	A	A	A[1]	A	A	A	A	A	A	A	A	A	B	A
Methyl Acetate	–	B	A	–	A	D	A[2]	–	–	–	–	D	D	–	D	B[1]	–	A	–	A	D	B	D	D	B	D	D	D	A	A	A	–	A	A	–	A
Methyl Acrylate	–	B	–	–	–	A	–	–	–	–	–	–	D	–	D	–	–	–	–	–	D	B	D	D	B	D	D	D	–	–	–	–	–	–	–	A
Methyl Acetone	–	D	A	–	–	C	A	–	–	–	–	D	D	–	–	–	–	A	–	A	D	–	–	A	D	D	–	A	A	A	B	–	–	A	–	–

Delrin, Hypalon, Neoprene, Teflon, Viton—Reg TM E.I. du Pont de Nemours & Co.
Kel-F—Reg TM Minnesota Mining and Mfg. Co.
Ryton—Reg TM Phillips Petroleum Co.
Tygon—Reg TM Norton Co.
Noryl—Reg TM General Electric Co.
Kynar—Reg TM Pennwalt Corp.
Cycolac—Reg Tm Mar-Bon Corp.

Chemical Resistance Guide

Ratings—chemical effect

A—No effect—Excellent.
B—Minor effect—Good.
C—Moderate effect—Fair.
D—Severe effect—Not recommended.

Explanation of footnotes

1. Satisfactory to 72°F.
2. Satisfactory to 120°F.
3. Satisfactory for O-rings.

The chemical resistance information presented has been supplied by chemical resin suppliers. No warranty is expressed or implied. For specific recommendations call JWI, Inc.

	PLASTICS																				ELASTOMERS								METALS & CERAMICS							
	Cycolac® (ABS)	Delrin® (Acetal)	Carbon/graphite	CPVC	Kel-F®	Epoxy	Nylon	PEEK	PES	Noryl® PPO	Ryton® PPS	PVC	Kynar® (PVDF)	Phenolic	Polypropylene	Polyethylene	Poly Sulfone	Teflon® TFE	Thermoplastic Polyester	Tygon	Buna N	EPDM	Hypalon®	Natural rubber	Neoprene®	Nitrile	Silicone	Viton®	Aluminum	Carpenter 20	Cast bronze	Cast iron	Hastelloy C	Stainless steel (316)	Titanium	Ceramic
Methyl Alcohol 10%	–	A	A	A[1]	A[2]	B[1]	C[1]	A	A	A[1]	A	A[1]	A	A	A[1]	A[1]	B[1]	A	B	C	A	A	A	A	A	A	A	D	A[1]	A	A	A	A	A	B	–
Methyl Bromide	D	D	A	D	–	B	C	–	–	–	–	D	A	–	C	–	–	A	–	–	B	D	D	D	D	B	–	A	–	–	–	–	–	A	–	A
Methyl Butyl Ketone	–	D	–	–	–	C	D	–	D	–	–	A	D	–	D	–	D	–	–	–	D	A	D	D	D	D	D	D	–	–	A	–	–	A	–	A
Methyl Cellosolve	–	D	A	–	–	C	C	–	–	–	–	B[2]	A	–	B[1]	–	–	A	–	A	C	B	D	D	B	C	D	D	A	A	–	–	–	A	–	A
Methyl Chloride	–	D	A	–	A[1]	A	C	–	–	D	A[1]	D	A	–	D[1]	C[1]	D	A	–	A	D	C	D	D	D	D	D	A	D	B[2]	C	A	B	A	A	A
Methyl Dichloride	–	D	–	–	–	A	C	–	–	–	–	A	A	–	D	–	D	–	–	–	D	D	–	–	D	–	–	A	–	–	–	–	–	–	–	A
Methyl Ethyl Ketone	D	B	A	D	A[1]	C[1]	A[1]	A	D	D	A	D	C[2]	A	A[1]	B[2]	D	A	–	A	D	A	D	D	D	D	D	D	A[2]	A	A	A	A	A	A	A
Methyl Isobutyl Ketone	–	D	A	–	A	C	A[1]	–	–	D	A	D	A[1]	A	C[1]	B[1]	D	A	–	–	D	C	D	D	D	D	D	D	A[2]	A	C[1]	A	A	A[2]	A	A
Methyl Isopropyl Ketone	–	D	–	–	–	C	D	–	–	–	–	–	D	A	D	–	D	–	–	–	D	B	D	D	D	D	D	D	–	A	A	–	A	A	–	A
Methyl Methacrylate	–	D	–	–	–	A	–	–	–	–	–	–	D	–	D	–	–	–	–	–	D	D	D	D	D	D	C	D	–	–	–	–	–	–	–	A
Methylamine	–	–	–	–	–	A	–	–	–	–	–	A	–	–	–	–	–	A	–	D	C[1]	A[1]	–	B	–	C[1]	–	D	–	–	D	–	–	A	–	A
Methylene Chloride	D	A[1]	A	D	A	A	C[1]	–	D	D	A[1]	D	B[2]	A	B[1]	C[1]	D	A	D	A	D	D	–	B	–	D	–	B	A[1]	B	A	A	B	B	B	A
Milk	B	A	A	A	A	A	A[2]	–	A	A[2]	–	A[2]	A	A	B	A[2]	A	A	–	B	A	A	A	A	A	A	A	A	A	A	C	D	A	A[2]	A	A
Molasses	B	A	A	A	A	A	A[1]	–	–	A[2]	–	A[2]	B[2]	A	A	A	A	A	–	B	A	–	–	A	A	A	–	A	A	A	D	A	A	A	A	A
Mustard	–	C	A	A	–	A	A[1]	–	–	A	–	B	A	D	A	A	A	A	–	B	C	–	–	B	A	C	–	D	B	A	D	D	A	A	A	A
Naptha	D	D	A	A	A	A	A[1]	–	–	D	A	C	A	A	C	A	–	A	–	C	C	D	D	D	D	C	D	A	A	A	B	A	B	A	B	A
Naphthalene	D	D	A	D	A	A	A[1]	–	–	D	A	D	A	A	B[2]	A	–	A	–	C	D	D	D	D	D	D	D	A	B[1]	A	C	A	A	A	A	A
Nickel Chloride	B	A	A	A	A	A	C[1]	–	A	A[1]	A	A[2]	A	A	A	B[2]	–	A	–	B	A	A	A	A	B	A	A	A	D	B[1]	D	D	B	C	A	A
Nickel Sulfate	B	A	A	A	A	A	A[1]	–	A	A[1]	A	A[2]	A	C	A	B[2]	–	A	–	A	A	A	A	B	A	A	A	A	D	B	C	D	B	B	B	A
Nitrating Acid (<15% H_2SO^4)	–	–	–	–	–	–	–	–	–	–	C	D	–	–	C	–	–	A	–	D	–	–	–	C	A	–	–	–	D	–	D	A	A	C	A	A
Nitrating Acid (>15% H_2SO^4)	–	–	–	–	–	D	–	–	–	–	D	D	–	–	C	–	–	A	–	D	–	–	–	C	A	–	–	–	D	–	D	C	A	C	C	A
Nitrating Acid (<1% Acid)	–	–	–	–	–	–	–	–	–	–	C	D	–	–	C	–	–	A	–	D	–	–	–	C	A	–	–	–	D	–	D	–	A	A	–	A
Nitrating Acid (<15% HNO_3)	–	–	–	–	–	–	–	–	–	–	C	D	–	–	C	–	–	A	–	D	–	–	–	C	A	–	–	–	D	–	D	C	A	D	C	A
Nitric Acid (5-10%)	B	D	A	A	A[1]	A[1]	C[1]	A	A	A	A[1]	A[1]	A	D	A[2]	B[2]	B[2]	A	–	D	D	B	B	D	B	D	C	A	D	A[1]	D	D	A[1]	A	A[1]	C
Nitric Acid (20%)	B	D	A	A[2]	A[1]	B[1]	D	A	B	B[2]	A[1]	A[1]	A	D	A[2]	C[1]	A[1]	A	–	D	D	B	D	D	D	D	D	A	D	A[1]	D	D	A[1]	A	A[1]	D
Nitric Acid (50%)	C	D	D	A[1]	A	D	D	A	D	B[2]	B	B[1]	A	D	D	C[1]	B[1]	A	–	D	D	D	D	D	D	D	D	A	C	A[1]	D	D	A[1]	A[1]	A[1]	D
Nitric Acid (Concentrate)	D	D	D	D	A[1]	D	D	C	D	B[1]	B[1]	D	A	D	D	C[1]	D	A	–	D	D	D	D	D	D	D	D	A	A[2]	A[2]	D	D	B[1]	A[1]	A[1]	D
Nitrous Acid	–	D	–	A	–	–	–	–	–	–	–	A	–	–	A	–	–	A	–	A	–	A	–	C	D	–	–	A	–	–	A	–	–	A	–	A
Nitrobenzene	D	B	B	D	A[1]	C[1]	B[1]	–	D	D	A	D	A[1]	D	B[1]	C[1]	D	A	–	D	D	D	D	D	D	D	D	B	A[1]	A	C	C	D	A	A	A
Oils: Aniline	D	D	–	–	–	A	A	–	–	D	–	D	A	D	A	–	–	A	–	A	D	B	D	D	D	D	D	C	D	A	A	A	B	A	D	A
Anise	–	D	–	–	–	A	–	–	–	–	–	–	–	A	–	–	–	–	–	–	–	–	–	–	D	–	–	–	–	A	A	A	–	A	–	A
Bay	–	D	–	–	–	A	–	–	–	–	–	–	A	A	–	–	–	–	–	–	–	–	–	–	D	–	–	A	–	A	A	A	–	A	–	A
Bone	–	D	–	–	–	A	–	–	–	–	–	–	A	–	A	–	–	–	–	A	A	–	–	–	D	A	–	A	–	A	A	A	–	A	–	A
Castor	–	A	–	A	–	A	A	–	A	–	–	A	A	A	A	–	–	A	–	A	A	B	A	A	A	A	A	A	–	–	A	A	–	A	A	A
Cinnamon	–	D	–	–	–	A	–	–	A	–	–	–	–	A	–	–	–	–	–	–	–	–	–	–	C	–	–	A	–	–	A	–	–	A	–	A
Citric	–	D	–	–	–	A	–	–	A	–	–	–	A	A	–	–	–	D	–	D	–	–	–	–	D	–	–	A	A	–	D	D	A	A	–	A
Clove	–	–	–	–	–	A	–	–	A	–	–	–	–	A	–	–	–	–	–	–	A	–	–	–	C	A	–	A	B	–	A	–	A	A	–	A
Cocoa Nut	–	A	–	A[1]	–	A	–	–	A	–	–	A[1]	A	A	A[1]	–	–	A	–	A	A	C	C	D	C	A	A	A	A	–	A	A	A	A	–	A
Cod Liver	–	B	–	A[1]	–	A	–	–	–	–	–	A[1]	A	A	A[1]	–	–	A	–	–	A	A	B	D	B	A	B	A	A	–	A	–	A	A	–	A
Corn	–	D	–	–	–	A	–	–	A	A	–	B	A	–	A[2]	C	–	A	–	B	A	C	B	D	C	A	A	A	A	–	C	A	A	A	–	A
Cotton Seed	–	B[1]	A	A	A[2]	A[1]	A	–	A	A	A	B[2]	A	A	A	B[2]	–	A	–	B	A	C	B	D	C	A	A	A	A	–	A	A	A	A	A	A
Cresote	–	D	A	–	A	A[1]	D	–	–	D	–	C	A	–	C[1]	C[2]	–	A	–	–	B	D	C	D	C	B	D	A	B	A[2]	A	A	B	B[2]	A	A
Diesel Fuel (20,30,40,50)	–	D	A	–	A[1]	A[1]	A	–	A	D	A	A[2]	A	A	A[1]	C[1]	–	A	–	A	A	D	B	D	B	A	D	A	A	A	A	A	B	A	B	A
Fuel (1,2,3,5A,5B,6)	–	D	A	–	A	A[1]	A[1]	–	A	A[1]	A	A[2]	B	A	C[1]	C[1]	–	A	–	A	B	D	D	D	D	B	C	A	C[1]	A	A	A	A[1]	A	A	A
Ginger	–	A	–	–	–	A	–	–	A	–	–	–	A	A	–	–	–	–	–	–	A	A	–	–	A	A	–	A	–	D	D	–	–	A	–	A
Hydraulic (See Hydraulic Oils)																																				
Lemon	–	D	–	–	–	A	–	–	–	–	–	–	A	A	–	–	–	A	–	–	–	D	–	–	D	–	–	A	D	A	A	–	–	A	–	A
Linseed	–	A	A	A	–	A	A[1]	–	–	A[1]	B	A[2]	A	A	A	C[1]	–	A	–	A	A	C	C	D	C	A	A	A	B	A	A	–	A	A[1]	A	A
Mineral	–	A	A	A	A	A	A	–	–	A[1]	A	A[1]	A	A	B[1]	B[1]	–	A	–	A	A	D	B	D	B	A	B	A	A	A	A	–	A	A	A	A
Olive	–	–	A	A	–	A	A[1]	–	A	A[2]	–	C	–	A	A	A[1]	–	A[1]	–	B	A	B	B	D	B	A	D	A	A	A	A	–	A	A	A	A
Orange	–	D	–	–	–	A	–	–	–	–	–	–	A	A	–	–	C	–	–	–	A	–	–	–	C	A	D	A	A	A	A	–	A	A	A	A
Palm	–	D	–	A	–	A	–	–	A	–	–	A	A	A	–	–	–	–	–	–	A	–	–	–	D	A	–	A	–	A	A	A	–	A	A	A
Peanut	–	D	–	A[1]	–	A	–	–	A	–	–	A[1]	A	A	D	–	–	A	–	A	A	C	B	D	B	A	A	A	D	A	A	A	–	A	A	A
Peppermint	–	D	–	–	–	A	–	–	A	–	–	–	A	A	–	–	–	–	–	–	D	–	–	–	D	D	–	A	D	A	A	–	–	A	–	A
Pine	–	D	–	A	–	A	A	–	–	–	–	A	A	C	D	–	C	A	–	C	B	D	D	D	D	B	D	A	–	A	D	C	–	A	A	A
Rapeseed	–	D	–	A	–	A	–	–	A	–	–	–	A	A	D	–	–	–	–	–	B	A	D	D	B	B	D	A	–	A	A	A	–	A	A	A
Rosin	–	–	A	–	–	A	A[1]	–	–	–	–	C[1]	A	A	A[2]	B[2]	–	A	–	–	A	–	–	–	–	A	–	A	B[1]	B[1]	A	–	A	A[1]	–	A
Sesame Seed	–	D	–	A	–	A	–	–	A	–	–	A	A	A	–	–	–	A	–	A	A	–	–	–	D	A	–	A	–	A	A	A	–	A	A	A
Silicone	–	A	A	A	–	A	A[1]	–	–	A[1]	A[1]	A	A	A	A	A	–	A	–	A	A	A	A	A	A	A	C	A	A	A	A	A	A	A	–	A
Soybean	–	D	A	A[2]	–	A	B[1]	–	A	–	–	A[1]	A	D	A[1]	A[1]	–	A	–	B	D	C	C	D	C	D	A	A	B	A	A	A	A	A	A	A
Sperm	–	D	–	A	–	A	–	–	–	–	–	–	A	A	–	–	–	–	–	A	A	–	–	–	D	A	–	A	–	A	A	A	–	A	A	A
Tanning	–	D	–	–	–	A	–	–	–	–	–	–	A	A	–	–	–	–	–	–	A	–	–	–	D	A	–	A	–	A	A	–	–	A	–	A
Turbine	–	D	–	A	–	A	–	–	–	–	–	A[1]	A	A	B[1]	C	–	A	–	A	B	D	D	D	D	B	D	A	–	A	A	A	–	A	A	A

Delrin, Hypalon, Neoprene, Teflon, Viton—Reg TM E.I. du Pont de Nemours & Co.
Kel-F—Reg TM Minnesota Mining and Mfg. Co.
Ryton—Reg TM Phillips Petroleum Co.
Tygon—Reg TM Norton Co.
Noryl—Reg TM General Electric Co.
Kynar—Reg TM Pennwalt Corp.
Cycolac—Reg Tm Mar-Bon Corp.

Ch mical Resistance Guide

Ratings—chemical effect

A—No effect—Excellent.
B—Minor effect—Good.
C—Moderate effect—Fair.
D—Severe effect—Not recommended.

Explanation of footnotes

1. Satisfactory to 72°F.
2. Satisfactory to 120°F.
3. Satisfactory for O-rings.

The chemical resistance information presented has been supplied by chemical resin suppliers. No warranty is expressed or implied. For specific recommendations call JWI, Inc.

	PLASTICS																				ELASTOMERS								METALS & CERAMICS							
	Cycolac® (ABS)	Delrin® (Acetal)	Carbon/graphite	CPVC	Kel-F®	Epoxy	Nylon	PEEK	PES	Noryl® PPO	Ryton® PPS	PVC	Kynar® (PVDF)	Phenolic	Polypropylene	Polyethylene	Poly Sulfone	Teflon® TFE	Thermoplastic Polyester	Tygon	Buna N	EPDM	Hypalon®	Natural rubber	Neoprene®	Nitrile	Silicone	Viton®	Aluminum	Carpenter 20	Cast bronze	Cast Iron	Hastelloy C	Stainless steel (316)	Titanium	Ceramic
Oleic Acid	D	C[1]	A	C[2]	A	A	B[1]	–	A	A[1]	A	C[2]	A	C	B[1]	C[2]	A[1]	A	–	B	C	B	C	D	C	C	D	B	B	B[1]	C	–	A[2]	B	B	A
Oleum 25%	–	D	D	D	A	D	D	D	D	–	A[1]	D	C[1]	–	D	D	D	A	–	–	D	D	D	D	D	D	D	A	B	B	D	–	B	B	D	–
Oleum 100%	–	D	D	D	A	D	D	D	D	A[1]	A[1]	D	C[1]	C	D	D	D	A	–	C	D	D	D	D	D	D	D	A	B	B	D	–	B	B	D	–
Oxalic Acid (cold)	A	C	A	A[1]	A	A	B[1]	–	A	A[1]	A	A[1]	A[2]	C	A[2]	A[2]	A[1]	A[1]	–	B	B	A	B	B	B	B	B	A	B[1]	B[1]	A	C	B	B[1]	D	A
Paraffin	–	A	A	A[1]	–	A	A[1]	A	A	A	–	A[1]	A	–	A[1]	B	A	A	–	A	A	D	–	B	A	A	–	B	A	A	A	–	A	A	A	A
Pentane	–	B	A	–	–	A	A[1]	A	A	–	–	A	A	–	D	D	–	A	–	A	A	D	B	D	B	A	D	A	A	C	C	–	B	C	–	A
Perchloroethylene	–	A	A	C[1]	A	D	C[1]	–	D	D	A	C[1]	A	–	D	D	D	A	–	C	C	D	D	D	D	C	D	A	B	B	D	A	B	A[1]	A	A
Petrolatum	–	B	–	–	–	A	D	–	A	–	–	B	A	–	D	B	–	C	–	B	A	A	–	C	A	A	–	A	–	A	A	–	A	A	–	A
Phenol (10%)	–	D	A	A[1]	B	C	D	–	D	D	A	C[1]	A	D	B	A[2]	–	A	–	C	D	B	D	D	D	D	D	A	B	B	C	D	A	B	A	–
Phenol (Carbolic Acid)	D	D	A	A[1]	B	C	C	–	D	D	A	C[1]	A	D	B	B[1]	–	A	–	B	D	B	D	D	D	D	D	A	B	B	C	D	A	B	A	A
Phosphoric Acid ((%)	B	C[1]	A	A	A	A	D	–	–	A	A	B[2]	A	D	A[1]	A[1]	A	A	–	D	D	B	B	D	B	D	D	A	C	B	D	D	A[2]	B	B	B
Phosphoric Acid (40%)	C	D	A	A	A	B	B[1]	–	–	A	A	B[2]	A[1]	D	B[2]	B[1]	A	A	–	D	D	B	C	D	D	D	C	A	B	B	D	D	A[2]	B	C	B
Phosphoric Acid (crude)	C	D	A	–	A	B	B[1]	–	–	A	A	B[2]	A	D	B[2]	B[1]	A	A	–	D	D	B	C	D	D	D	C	A	B	B	D	D	A[2]	B	C	C
Phosphoric Acid Anhydride	–	D	–	–	–	–	–	–	–	–	D	–	D	D	A	–	A[1]	–	–	–	–	–	–	–	A	–	–	–	–	–	A	–	–	–	D	A
Phosphoric Acid (molten)	D	D	–	–	–	–	–	–	–	–	–	D	D	D	D	–	–	–	–	D	–	–	–	–	A	–	–	–	–	–	A	–	A	–	D	–
Photographic Developer	B	A	A	A	–	A	–	–	–	A	–	A	–	A	A	A	–	A	–	–	A	B	A	A	A	A	A	A	–	A	D	D	–	A	A	A
Phthalic Anhydride	–	–	A	D	–	–	–	–	–	–	–	D	A	–	D	–	–	A	–	B	B	A	–	C	A	B	–	A	A	A	B	–	A	A	–	–
Picric Acid	A	A	A	D	A	A	C[1]	–	–	–	A	D	A[1]	D	B[1]	–	–	A	–	D	B	B	B	B	B	B	D	A	A[1]	B	D	A	B	B	A	–
Plating Solutions																																				
Antimony Plating 130°F	–	A	–	A	–	B	D	–	–	A	–	A	A	A	A	–	–	A	–	–	A	–	–	–	A	A	–	A	A	A	A	A	A	A	A	A
Arsenic Plating 110°F	–	A	–	A	–	B	A	–	–	–	–	A	A	A	A	–	–	A	–	–	A	–	–	–	A	A	–	A	A	A	A	A	A	A	A	C
Brass Plating:																																				
Regular Brass Bath 100°F	–	A	A	A	–	B	A	–	–	A	–	A	B	A	A	B	–	A	–	–	A	–	–	–	A	A	–	A	A	A	A	A	A	A	A	C
High Speed Brass Bath 110°F	–	A	A	A	–	B	A	–	–	A	–	A	B	A	A	B	–	A	–	–	A	–	–	–	A	A	–	A	A	–	A	A	A	A	A	D
Bronze Plating:																																				
Cu-Cd Bronze Bath R.T.	–	A	–	A	–	B	A	–	–	A	–	A	A	A	A	–	–	A	–	–	A	A	–	–	A	A	–	A	A	–	A	A	A	A	A	C
Cu-Sn Bronze Bath 160°F	–	B	–	D	–	C	A	–	–	A	–	D	A	A	A	–	–	A	–	–	A	A	–	–	A	A	–	A	A	–	A	A	A	A	A	D
Cu-Zn Bronze Bath 100°F	–	A	–	A	–	B	A	–	–	A	–	A	A	A	A	–	–	A	–	–	A	–	–	–	A	A	–	A	A	–	A	A	A	A	A	C
Cadmium Plating:																																				
Cyanide Bath 90°F	–	A	–	A	–	B	A	–	–	A	–	A	A	–	A	–	–	A	–	–	A	–	–	–	A	A	–	A	A	–	A	A	A	A	A	C
Fluborate Bath 100°F	–	C	–	A	–	B	D	–	–	A	–	A	A	A	A	–	–	A	–	–	B	–	–	–	C	B	–	A	A	–	A	D	D	A	D	D
Chromium Plating:																																				
Chromic-Sulfuric Bath 130°F	–	D	–	A	–	C	D	–	–	D	–	A	C	–	A	–	–	A	–	–	D	–	–	–	D	D	–	C	A	–	C	A	D	C	A	A
Fluosilicate Bath 95°F	–	D	–	A	–	C	D	–	–	D	–	A	C	–	D	–	–	A	–	–	D	–	–	–	D	D	–	C	A	–	C	C	D	C	C	B
Fluoride Bath 130°F	–	D	–	A	–	C	D	–	–	D	–	A	C	–	A	–	–	A	–	–	D	–	–	–	D	D	–	C	A	–	D	C	D	D	C	B
Black Chrome Bath 115°F	–	D	–	A	–	C	D	–	–	D	–	A	C	–	A	–	–	A	–	–	C	–	–	–	D	C	–	C	A	–	C	A	D	C	A	A
Barrel Chrome Bath 95°F	–	D	–	A	–	C	D	–	–	D	–	A	C	–	A	–	–	A	–	–	D	–	–	–	D	D	–	C	A	–	D	C	D	D	C	A
Copper Plating (Cyanide):																																				
Copper Strike Bath 120°F	–	A	–	A	–	B	A	–	–	A	–	A	B	A	A	–	–	A	–	–	A	–	–	–	A	A	–	A	A	–	–	A	A	A	–	C
Rochelle Salt Bath 150°F	–	B	–	D	–	C	A	–	–	A	–	D	A	–	A	–	–	A	–	–	A	–	–	–	B	A	–	A	A	–	–	A	A	A	D	D
High Speed Bath 180°F	–	B	–	D	–	C	A	–	–	A	–	D	A	–	A	–	–	A	–	–	A	–	–	–	B	A	–	A	A	–	–	A	A	A	D	D
Copper Plating (Acid):																																				
Copper Sulfate Bath R.T.	–	A	–	A	–	D	D	–	–	A	–	A	A	–	A	–	–	A	–	–	A	–	–	–	A	A	–	A	A	–	D	A	D	D	A	A
Copper Fluoborate Bath 120°F	–	C	–	A	–	D	D	–	–	A	–	A	A	A	A	–	–	A	–	–	B	–	–	–	C	B	–	A	A	–	D	D	D	D	D	D
Copper Plating (Misc):																																				
Copper Pyrophosphate	–	A	–	A	–	B	A	–	–	A	–	A	A	–	A	–	–	A	–	–	A	–	–	–	A	A	–	A	A	–	A	A	A	A	A	B
Copper (Electroless)	–	D	–	A	–	B	A	–	–	A	–	A	A	–	A	–	–	A	–	D	D	–	–	–	D	D	–	A	A	–	–	–	–	–	A	A
Gold Plating:																																				
Cyanide 150°F	–	–	–	D	–	D	A	–	–	A	–	D	–	–	A	–	–	A	–	–	A	–	–	–	A	A	–	A	–	–	–	–	A	A	A	B
Neutral 75°F	–	–	–	A	–	A	A	–	–	A	–	A	–	–	A	–	–	A	–	–	A	–	–	–	A	A	–	A	–	–	–	–	A	C	A	A
Acid 75°F	–	–	–	A	–	A	A	–	–	A	–	A	–	–	A	–	–	A	–	–	A	–	–	–	A	A	–	A	–	–	–	–	A	C	A	A
Indium Sulfamate Plating R.T.	–	–	–	A	–	A	D	–	–	A	–	A	–	–	A	–	–	A	–	–	A	–	–	–	A	A	–	A	–	–	–	–	A	C	A	A
Iron Plating:																																				
Ferrous Chloride Bath 190°F	–	–	–	D	–	D	D	–	–	A	–	D	–	A	C	–	–	A	–	–	B	–	–	–	D	B	–	A	–	–	–	–	D	D	A	A
Ferrous Sulfate Bath 150°F	–	–	–	D	–	D	D	–	–	A	–	D	–	A	A	–	–	A	–	–	A	–	–	–	B	A	–	A	–	–	–	–	A	C	A	A
Ferrous Am. Sulfate Bath 150°F	–	–	–	D	–	D	D	–	–	A	–	D	–	A	A	–	–	A	–	–	A	–	–	–	B	A	–	A	–	–	–	–	A	C	A	A
Sulfate-Chloride Bath 160°F	–	–	–	D	–	D	D	–	–	A	–	D	–	A	A	–	–	A	–	–	B	–	–	–	C	B	–	A	–	–	–	–	D	D	A	A
Fluoborate Bath 145°F	–	–	–	D	–	D	D	–	–	A	–	D	–	–	A	–	–	A	–	–	B	–	–	–	C	B	–	A	–	–	–	–	B	D	D	D
Sulfamate 140°F	–	–	–	A	–	A	D	–	–	A	–	A	–	–	A	–	–	A	–	–	A	–	–	–	A	A	–	A	–	–	–	–	B	D	A	A
Lead Fluoborate Plating	–	–	–	A	–	A	D	–	–	A	–	A	–	A	A	–	–	A	–	–	B	–	–	–	A	B	–	A	–	–	–	–	A	C	D	D
Nickel Plating:																																				
Watts Type 115-160°F	–	–	–	D	–	D	A	–	–	A	–	D	–	–	A	–	–	A	–	–	A	–	–	–	A	A	–	A	–	–	–	–	A	C	A	A
High Chloride 130-160°F	–	–	–	D	–	D	D	–	–	A	–	D	–	–	A	–	–	A	–	–	A	–	–	–	B	A	–	A	–	–	–	–	A	C	A	A

Delrin, Hypalon, Neoprene, Teflon, Viton—Reg TM E.I. du Pont de Nemours & Co.
Kel-F—Reg TM Minnesota Mining and Mfg. Co.
Ryton—Reg TM Phillips Petroleum Co.
Tygon—Reg TM Norton Co.
Noryl—Reg TM General Electric Co.
Kynar—Reg TM Pennwalt Corp.
Cycolac—Reg Tm Mar-Bon Corp.

Chemical Resistance Guide

Ratings—chemical effect

A—No effect—Excellent.
B—Minor effect—Good.
C—Moderate effect—Fair.
D—Severe effect—Not recommended.

Explanation of footnotes

1. Satisfactory to 72°F.
2. Satisfactory to 120°F.
3. Satisfactory for O-rings.

The chemical resistance information presented has been supplied by chemical resin suppliers. No warranty is expressed or implied. For specific recommendations call JWI, Inc.

	PLASTICS																	ELASTOMERS								METALS & CERAMICS							
	Cycolac® (ABS)	Delrin® (Acetal)	Carbon/graphite	CPVC	Kel-F®	Epoxy	Nylon	PEEK	PES	Noryl® PPO	Ryton® PPS	PVC	Kynar® (PVDF)	Phenolic	Polypropylene	Polyethylene	Poly Sulfone	Teflon® TFE	Thermoplastic Polyester	Tygon	Buna N	EPDM	Hypalon®	Natural rubber	Neoprene®	Nitrile	Silicone	Viton®	Aluminum	Carpenter 20	Cast bronze	Cast iron	Hastelloy C	Stainless steel (316)	Titanium	Ceramic
Nickel Plating (cont):																																				
Fluoborate 100-170°F	–	–	–	A	–	A	D	–	–	A	–	A	–	A	A	–	–	A	–	–	B	–	–	–	A	B	–	A	–	–	–	–	A	C	D	D
Sulfamate 100-140°F	–	–	–	A	–	A	A	–	–	A	–	A	–	–	A	–	–	A	–	–	A	–	–	–	A	A	–	A	–	–	–	–	A	C	A	A
Electroless 200°F	–	–	–	D	–	B	D	–	–	D	–	D	–	–	D	–	–	A	–	–	D	–	–	–	D	D	–	A	–	–	–	–	–	–	–	A
Rhodium Plating 120°F	–	–	–	A	–	A	D	–	–	A	–	A	–	–	A	–	–	A	–	–	A	A	–	–	B	A	–	A	–	–	–	–	D	D	D	A
Silver Plating 80-120°F	–	–	–	A	–	A	A	–	–	A	–	A	–	A	A	–	–	A	–	–	A	A	–	–	A	A	–	A	–	–	–	–	A	A	A	B
Tin-Fluoborate Plating 100°F	–	–	–	A	–	A	D	–	–	A	–	A	–	A	A	–	–	A	–	–	B	–	–	–	C	B	–	A	–	–	–	–	A	C	D	D
Tin-Lead Plating 100°F	–	–	–	A	–	A	D	–	–	A	–	A	–	–	A	–	–	A	–	–	B	–	–	–	C	B	–	A	–	–	–	–	A	C	D	D
Zinc Plating																																				
Acid Chloride 140°F	–	–	–	A	–	A	D	–	–	A	–	A	–	–	A	–	–	A	–	–	A	–	–	–	A	A	–	A	–	–	–	–	D	D	A	A
Acid Sulfate Bath 150°F	–	–	–	D	–	D	D	–	–	A	–	D	–	A	A	–	–	A	–	–	A	–	–	–	B	A	–	A	–	–	–	–	A	C	A	A
Acid Fluoborate Bath R.T.	–	–	–	A	–	A	D	–	–	A	–	A	–	A	A	–	–	A	–	–	B	–	–	–	C	B	–	A	–	–	–	–	A	C	D	D
Alkaline Cyanide Bath R.T.	–	–	–	A	–	A	A	–	–	A	–	A	–	A	A	–	–	A	–	–	A	–	–	–	A	A	–	A	–	–	–	–	A	A	A	D
Potash	–	B	–	C	–	A	A	–	–	A	–	C	–	C	A	B	–	–	–	B	A	–	–	B	D	A	–	A	C	A	D	C	B	A	–	A
Potassium Bicarbonate	C	C	A	A	A	A	A¹	–	–	A¹	A	A	B	A	A	A	–	A	–	–	A	–	–	B	A	A	–	A	D	B	D	A	B	B	A	A
Potassium Bromide	–	A	A	A	A	A	A¹	–	–	A¹	A	A	A	–	A	A	–	A	–	–	A	A	–	B	A	A	–	A	B	B	C	–	B	B	A	A
Potassium Carbonate	–	B	A	A	A	A	A¹	–	–	A¹	A	A	A	A	A	A	–	A	–	B	A	A	–	B	A	A	–	A	D	B	D	A	B	B¹	A¹	A
Potassium Chlorate	–	B	C	A	A²	A	C¹	–	–	A¹	A	A	A	–	A	A	–	A	–	B	C	A	–	B	A	C	–	A	B	B¹	B	–	C	B¹	A	A
Potassium Chloride	C	A	A	A	A	A	B¹	–	–	A¹	A	A	A	A	A	A	–	A	–	A	A	A	A	A	A	A	A	A	D	A¹	D	A	B	B¹	A	A
Potassium Chromate	–	C	A	A	–	C	A	–	–	A²	–	A	B	D	A	A	–	A¹	–	–	A	A	–	B	A	A	–	A	B¹	B¹	A	A	A	B¹	–	D
Potassium Cyanide Solutions	–	C	A	A	A	A	A¹	–	–	A¹	A	A	A	D	A	A	–	A	–	–	A	A	A	A	A	A	A	A	D	B	D	A	B	B¹	A	A
Potassium Dichromate	–	C	A	A	A	C	D	–	–	A¹	A	A	A	D	A	A	–	A	–	–	A	A	A	B	A	A	A	A	B	B¹	A	A	B	B	A	A
Potassium Ferrocyanide	–	–	A	B	A	A	B¹	–	–	A	–	B	A	–	A	A¹	–	A	–	–	A	A	–	A	–	A	–	A	B¹	B¹	A	–	B	B	A	–
Potassium Hydroxide (Caustic Potash)	C	D	C	A¹	B	A	C¹	–	A	A¹	A	A¹	A	C	A	A	B	A	–	B	B	A	A	B	B	B	C	B	D	B¹	D	C	B¹	B	D	D
Potassium Nitrate	–	B	A	A	–	A	B¹	–	–	A¹	A	A	A	–	A	B	A	A	–	C	A	A	A	A	A	A	A	A	B	B¹	B	–	B¹	B	A	A
Potassium Permanganate	C	C	A	A¹	–	A	D	–	–	A	A	A¹	A	A	A¹	A	–	A	–	–	C	A	–	B	A	C	–	A	B¹	B	C	A	A¹	B¹	A	A
Pottassium Suffate	–	B	A	A	A¹	A	A¹	–	–	A	A	A²	A	A	A	A²	–	A	–	A	A	A	B	B	A	A	A	A	D	A¹	C	A	B¹	B¹	A	A
Potassium Sulfide	–	–	A	A²	A	–	–	–	–	A	–	A²	–	–	A	A²	–	A	–	–	A	A	B	B	A	A	A	A	–	A	–	–	–	A¹	A	–
Propane (Liquified)	–	A	A	A¹	A	A	A¹	–	B	A¹	–	A¹	A	–	B¹	C¹	–	A	–	–	A	D	B	D	B	A	D	A	A	A²	A	–	A	A	–	A
Propylene Glycol	B	B	–	C¹	–	C	–	–	–	–	–	C¹	–	A	A²	B²	B	A	–	–	A	–	–	–	C	A	–	A	B	A	A	A	B	B	A	A
Pyridine	–	A	A	D	A¹	A	C¹	–	D	B	A	D	C¹	D	A²	B¹	D	A	–	D	D	B	D	D	D	D	D	D	B	A	D	A	B	A	B	A
Pyrogallic Acid	–	D	A	A	A	A	–	–	–	–	–	A	B	–	A	–	–	A	–	–	–	–	–	–	–	–	–	A	B	B¹	B	–	B	B²	A	A
Rosins	–	B	A	C¹	A	A	A¹	–	–	–	–	C¹	–	–	A²	B¹	–	–	–	–	A	–	–	–	–	A	–	–	B¹	B	B	–	–	A¹	–	A
Rum	–	A	–	A	–	A	A	–	–	A	–	A	–	A	A	–	–	–	–	–	A	–	–	–	A	A	–	A	–	A	–	–	–	A	–	A
Rust inhibitors	–	A	–	–	–	A	–	–	–	–	–	–	–	B	A	–	–	–	–	–	A	–	–	–	C	A	–	A	–	A	B	C	–	A	–	A
Salad Dressings	–	A	–	–	–	A	A	–	–	A	–	–	–	–	A	–	–	–	–	–	A	–	–	–	–	A	–	A	B	–	B	D	–	A	–	A
Sea Water	–	A	A	A	A	A	A²	A	A	A¹	A	A²	A	A	A	A²	A	A	A	–	A	A	A	A	A	A	A	A	B	A	A	–	A	A	A	A
Shellac (Bleached)	–	A	A	–	–	A	A¹	–	–	–	–	–	–	–	A	A¹	–	A	–	–	A	–	–	–	D	A	–	–	A	A	A	A	–	A	–	A
Shellac (Orange)	–	A	A	–	–	A	A¹	–	–	–	–	–	–	–	A	A¹	–	A	–	–	A	–	–	–	D	A	–	–	A	A	A	A	–	A	–	A
Silicone	–	A	A	A	–	A	A¹	A	A	A¹	A¹	A	–	D	A	–	A	A	–	–	A	A	A	A	A	A	C	A	A	–	A	A	–	A	–	A
Silver Bromide	–	C	–	–	A	A	–	–	–	A	–	–	–	–	–	–	–	A	–	–	–	–	–	–	–	–	–	–	D	A	–	–	A	A	–	–
Silver Nitrate	–	A	A	A¹	A	A	A¹	–	A	A	A	A¹	A	A	A¹	B²	A	A	–	B	B	A	A	A	A	B	A	A	D	B	D	D	A	B	A	A
Soap Solutions	–	A	A	A	–	A	A¹	–	A	A¹	A	A	A¹	A	A	C²	–	A	–	B	A	A	A	B	A	A	A	A	C	A	C	A	A	A	A	A
Soda Ash (see Sodium Carbonate)																																				
Sodium Acetate	–	B	A¹	A	A	A	B¹	–	–	A¹	A	B¹	A	–	A	B²	–	A	–	–	B	A	D	A	B	B	D	D	B	B	A	–	A	B	A	A
Sodium Aluminate	–	B	A	–	–	A	A¹	–	–	A	A	–	–	–	–	–	–	A	–	–	A	A	–	B	A	A	–	A	–	A	B	–	B	A	A	A
Sodium Bicarbonate	B	A	A	A²	A	A	A	–	–	A	A	A²	A	A	A	A²	B	A	–	B	B	A	D	A	B	B	D	D	D	A	A	C	B¹	B	A²	A
Sodium Bisulfate	C	B	A	A²	A²	A	A¹	–	–	A¹	A	A²	A	A	A	A²	–	A	–	B	B	A	–	A	C	B	–	A	D	A²	C	D	B²	B¹	A	A
Sodium Bisulfite	B	B	A	A²	–	A	C¹	–	–	A¹	A	A²	A	D	A	A²	–	A	–	B	A	A	A	A	A	A	A	A	D	B¹	C	D	B	B¹	A	A
Sodium Borate	–	–	A	A²	–	A	A¹	–	–	A¹	A	A²	A	–	A²	A²	–	A	–	–	A	A	A	A	A	A	A	A	C	A	A	–	A	B²	A	–
Sodium Carbonate	C	A¹	A	A²	A	C¹	B¹	–	–	A	A	A²	A	A	A	B²	B	A	–	B	A	A	A	A	A	A	A	A	D	A²	B	A	A	A	A¹	A
Sodium Chlorate	–	A	C	A¹	–	A	D	–	–	A¹	A	A¹	A	–	A	B²	–	A	–	B	C	A	–	A	A	C	–	A	C¹	B¹	B	–	B¹	B¹	A	A
Sodium Chloride	B	A¹	A	A²	A	A	A¹	–	A	A	A	A²	A	A	A	A²	–	A	–	B	A	A	A	A	A	A	A	A	C	B	C	A	A	C	A	A
Sodium Chromate	–	D	A	–	A	C	D	–	–	A	A	–	–	D	–	–	–	A	–	–	A	–	–	–	A	A	–	A	B	B	A	A	A	B¹	–	B
Sodium Cyanide	–	A	A	A²	A	A	A¹	–	–	A¹	A	A²	A	A	A	A²	–	A	–	–	A	A	A	A	A	A	A	A	D	A	D	A	A	A	A	A
Sodium Fluoride	–	–	A	A²	–	A	B	–	–	A²	–	A²	A	–	A	A²	–	A¹	–	D	A¹	A	–	D	D	A¹	–	A	B	C	C	–	A	D	A	–
Sodium Hydrosulfite	–	–	–	C	–	–	A	–	–	–	–	C	–	–	–	–	–	A	–	A	–	–	–	A	A	–	–	A	A	–	C	–	A	–	–	A
Sodium Hydroxide (20%)	C	A	A²	A	A	A²	A	A	A	A	A	A	–	C	A	A²	A	A	D	B	B	A	A	A	B	B	B	B	D	A	D	A	B	A	A¹	D
Sodium Hydroxide (50%)	C	C	A²	A	A	B²	A	A	A	A	A	A	A	D	A	A²	A	A	D	B	B	A	A	A	B	B	B	B	D	B	D	C	B	B	B¹	D
Sodium Hydroxide (80%)	C	D	A²	A	A	A¹	C	B	–	A	A	A	–	D	A	B²	–	A¹	D	C	B	A	A	A	B	B	C	B	D	B	D	C	A¹	C	D	D
Sodium Hypochlorite (<20%)	–	D	B	C²	A	C	D	–	A	A	A	C²	A	D	C¹	B²	A	A	–	C	B	B	B	C	B	B	B	A	D	C	D	D	A	C	C	A
Sodium Hypochlorite (100%)	–	D	C	C²	A	D	D	–	–	A	A	C²	A	D	B	B²	–	A	–	–	B	B	B	C	B	B	B	A	D	C	D	D	B	D	C	D
Sodium Hyposulfate	–	–	–	–	–	C	–	–	–	–	–	–	–	–	–	–	–	A	–	–	–	–	–	C	C	–	–	–	D	–	D	–	–	A	–	–

Delrin, Hypalon, Neoprene, Teflon, Viton—Reg TM E.I. du Pont de Nemours & Co.
Kel-F—Reg TM Minnesota Mining and Mfg. Co.
Ryton—Reg TM Phillips Petroleum Co.
Tygon—Reg TM Norton Co.
Noryl—Reg TM General Electric Co.
Kynar—Reg TM Pennwalt Corp.
Cycolac—Reg Tm Mar-Bon Corp.

Ch mical Resistance Guide

Ratings—chemical effect

A—No effect—Excellent.
B—Minor effect—Good.
C—Moderate effect—Fair.
D—Severe effect—Not recommended.

Explanation of footnotes

1. Satisfactory to 72°F.
2. Satisfactory to 120°F.
3. Satisfactory for O-rings.

The chemical resistance information presented has been supplied by chemical resin suppliers. No warranty is expressed or implied. For specific recommendations call JWI, Inc.

	PLASTICS																				ELASTOMERS								METALS & CERAMICS							
	Cycolac® (ABS)	Delrin® (Acetal)	Carbon/graphite	CPVC	Kel-F®	Epoxy	Nylon	PEEK	PES	Noryl® PPO	Ryton® PPS	PVC	Kynar® (PVDF)	Phenolic	Polypropylene	Polyethylene	Poly Sulfone	Teflon® TFE	Thermoplastic Polyester	Tygon	Buna N	EPDM	Hypalon®	Natural rubber	Neoprene®	Nitrile	Silicone	Viton®	Aluminum	Carpenter 20	Cast bronze	Cast Iron	Hastelloy C	Stainless steel (316)	Titanium	Ceramic
Sodium Metaphosphate	–	B	A	A[1]	–	A	A[1]	–	–	–	–	B[2]	–	A	A[1]	A[1]	–	A	–	–	A	A	B	A	B	A	–	A	C	A	C	D	–	A	–	A
Sodium Metasilicate	–	D	–	A	–	A	–	–	–	–	–	A	–	–	A	–	–	A	–	–	A	A	–	–	A	A	–	A	D	A	B	–	A	A	–	–
Sodium Nitrate	–	A	C	A	A	A	A[1]	–	–	A[1]	A	A[2]	A	A	A	A[2]	–	A	–	B	B	A	A	B	B	B	D	A	B	B	C	A	B	B[1]	A	A
Sodium Perborate	–	B	C	A[1]	A	B	B[1]	–	–	A	–	A[2]	–	A	A	A[1]	–	A	–	–	B	A	B	B	B	B	B	A	C	B	D	C	B	B	–	A
Sodium Peroxide	–	D	A	A[2]	A	C	A[1]	–	–	–	–	B[2]	A	D	B	A	–	A	–	–	B	A	B	B	B	B	D	A	C	A	D	C	B	A	–	A
Sodium Polyphosphate	–	B	A	A[1]	A	A	A[1]	–	–	A[1]	–	A[1]	A	A	A	A	–	A	–	–	A	A	A	A	B	A	D	A	D	B	C	D	A	B	A	A
Sodium Silicate	–	C	A	A[2]	A	A	A[1]	–	–	A[1]	A	A[2]	A	A	A	A[2]	B	A	–	B	A	A	A	A	A	A	–	A	D	B	A	A	B	A	A	A
Sodium Sulfate	–	B	A	A[2]	A	A	A	–	–	A	A	A[2]	A	A	A	A[2]	–	A	–	–	A	A	A	B	A	A	A	A	A	B	C	A	B	B	A	A
Sodium Sulfide	–	B	A	A[2]	A[1]	A	A[1]	–	–	A	A	A[2]	A	D	A	A[2]	–	A	–	B	A	A	A	B	A	A	A	A	D	B[1]	D	A	B[1]	B	A	A
Sodium Sulfite	–	–	A	A[2]	A	A	D	–	–	A	–	A[2]	A	A	A[2]	B[1]	–	A	–	A	A	A	A	B	A	A	A	A	C[1]	B	C	A	B	B	A	A
Sodium Tetraborate	–	B	A	A	–	A	A	–	–	A	–	A[2]	–	–	–	A[2]	–	A	–	–	A	–	–	–	–	A	–	A	C	A	–	–	–	A[2]	–	A
Sodium Thiosulfate (hypo)	–	C[1]	A	A[2]	A	A	B	–	–	A	A	A[2]	A	A	A[2]	A[1]	–	A	–	–	B	A	A	B	A	B	A	A	A	A[2]	D	C	A[2]	A[2]	A	A
Sorghum	–	A	–	–	–	A	A	–	–	–	–	–	–	D	–	–	–	–	–	–	A	–	–	–	A	A	–	A	–	A	D	A	–	A	–	A
Soy Sauce	–	A	–	–	–	A	A	–	–	A	–	–	–	D	–	–	–	–	–	–	A	–	–	D	A	A	–	A	A	A	A	D	–	A	–	A
Stannic Chloride	–	C	A	A[2]	A	A	B[1]	–	–	A[1]	A	A[2]	A	–	A	A[2]	–	A	–	–	A	B	D	A	D	A	B	A	D	A	D	D	B	D	A	A
Stannic Fluoborate	–	C	–	–	–	A	–	–	–	A	–	–	–	A	–	–	–	–	–	–	A	–	–	–	A	A	–	A	–	–	D	D	–	A	–	A
Stannous Chloride	–	–	–	A[2]	A	A	C[1]	–	–	A[2]	A[1]	A[1]	A	–	A	B[2]	–	A	–	A	A	A	A	A	A	A	B	A	D	A[1]	D	–	B	A[2]	A	–
Starch	–	A	A	A	A	A	A[1]	–	–	A[2]	–	A	–	A	A[2]	B	–	A	–	–	C	A	–	–	A	C	–	A	A	–	A	C	–	A	–	A
Stearic Acid	–	A	A	B[2]	–	B	A[2]	–	–	A	–	B[2]	A	D	A[2]	B[1]	–	A	–	B	B	B	B	B	B	B	B	A	B	B	C	C	B	A	A	A
Stoddard Solvent	B	A	A	C[1]	A	A	A	–	–	D	A	C[1]	A	D	C	C[2]	–	A	–	–	A	D	D	D	C	A	D	A	A	A	A	A	A	A	A	A
Styrene	–	A	A	D	–	A	A[1]	–	–	A	–	D	–	D	–	–	–	A	–	–	D	D	D	D	D	D	D	B	A	A	A	–	D	A	–	A
Sugar (Liquids)	B	A	A	–	–	A	A[1]	–	–	A[2]	–	–	–	–	A	–	–	A	–	B	A	A	B	A	B	A	A	A	A	A	A	–	A[1]	A	–	A
Sulfate (Liquors)	–	D	A	B	–	A	B[1]	–	–	–	–	B	A	D	A	A[2]	A	A	–	–	A	A	–	–	A	A	–	A	D	B	D	D	B	B	–	A
Sulfur Chloride	–	D	D	C[1]	A	C	A[1]	–	–	A	–	C[1]	A[1]	–	C[1]	C[1]	–	A	–	C	D	D	D	D	D	D	C	A	D	B	D	D	A	D	D	C
Sulfur Dioxide	D	B	A	A[2]	A	A[1]	C[1]	–	–	A	A	A[1]	A	–	A[1]	B[1]	–	A	–	C	D	A	C	B	B	D	B	A	B	B	B	–	C	A[1]	A	A
Sulfur Dioxide (Dry)	–	B	A	A[2]	A	A[1]	B[1]	–	–	A	A	A[2]	A	A	A[1]	A[1]	B	A	–	C	D	A	D	C	D	D	B	A	B	B	A	A	B	A	A	A
Sulfur Trioxide (Dry)	–	D	D	A	–	A	A[1]	–	–	D	–	A[1]	C[1]	–	D	C[1]	B	A	–	B	D	B	D	B	D	D	B	A	A	B	B	–	B	A	D	A
Sulfuric Acid (<10%)	B	D	A[1]	A	A	A[1]	C[1]	A	A	A	A	A[1]	A	D	A[2]	A[1]	A	A	A	B	D	B	C	C	B	D	D	A	D	B	D	D	B[1]	B	D	A
Sulfuric Acid (10-75%)	B	D	A[1]	A	A	A[1]	D	A	B	A	A	A[1]	A	D	A[1]	A[1]	A	A	B	–	D	B	C	C	C	D	D	A	D	B	D	D	B[1]	D	D	D
Sulfuric Acid (75-100%)	–	–	C[1]	C	A	C[1]	D	D	C	A	A[1]	D	A	D	C[1]	B[1]	C	A	–	D	D	B	B	D	D	D	D	A	D	B	D	D	B[1]	D	D	A
Sulfuric Acid (Hot Conc)	–	–	D	D	A	D	D	D	D	D	D	D	C	D	D	D	D	A	–	D	D	D	D	D	D	D	D	A	D	B	D	D	D	C	D	–
Sulfuric Acid (Cold Conc)	–	–	D	D	A	D	D	D	D	A	A[1]	D	A	D	A[2]	C	B	A	–	D	D	B	B	D	D	D	D	A	B	B	D	D	A[1]	B	D	–
Sulfurous Acid	–	C	A	A[2]	A	A	D	–	D	A	A	A[2]	A	–	A	B[2]	–	A	–	B	B	B	A	B	B	B	D	A	B[1]	B	D	D	B	B	A	A
Sulfuryl Chloride	–	A	–	–	–	A	–	–	–	–	–	–	–	–	–	–	–	A	–	–	–	–	–	–	–	–	–	–	–	–	–	–	–	–	–	A
Tallow	–	A	A	–	–	A	A[1]	–	–	A	–	–	–	–	A[2]	C	–	A	–	–	A	–	–	–	–	A	–	A	A	–	–	–	–	A	–	A
Tannic Acid	–	B	A	A[1]	A	A	C[1]	–	–	A[2]	A	A[1]	B	–	A	B[2]	–	A	–	B	A	A	B	A	B	A	B	A	C	B	A	C	B[1]	A	A	A
Tanning Liquors	–	B	A	A[1]	–	A	A[1]	–	–	A[2]	–	A[1]	–	C	A[1]	A[1]	–	A	–	B	A	B	–	–	A	A	–	A	A	A[2]	A	–	B	A[2]	A	A
Tartaric Acid	–	B	A	A[1]	A[2]	A	B[2]	–	A	A[1]	A	A[1]	B	A	A	A[1]	A	A	–	B	A	B	A	A	B	A	A	A	B[1]	B[1]	A	C	B	C[2]	A[1]	A
Tetrachloroethane	–	A	A	C	A	A	C[1]	–	–	D	–	C	A	–	C	–	D	A	–	–	D	–	–	D	–	D	–	A	C	–	–	–	A	A	A	A
Tetrachlorethylene	–	A	A	D	A	–	A[1]	–	–	D	–	D	–	–	D	B	D	A	–	–	D	D	D	D	D	D	D	A	–	–	–	–	–	A	–	–
Tetrahydrofuran	–	A	A	D	A[1]	A	A	–	D	D	A	D	B[1]	–	C[2]	C[1]	D	A	–	–	D	B	D	D	D	D	–	D	–	A	D	–	A	A	B	A
Toluene (Toluol)	D	C[1]	A	D	B[2]	B[1]	A[1]	A	D	D	A	D	A[1]	A	C[1]	C[1]	D	A	A	D	D	D	D	D	D	D	D	A	A	A	A	A	A	A	A	A
Tomato Juice	B	B	A	–	A	A	A[1]	–	–	A	A	A	A	–	A	A[1]	A	A	–	–	A	–	–	–	A	A	–	–	A	A	C	–	–	A	–	A
Trichloroethane	–	A	A	–	A	A	C[1]	–	–	D	–	C	A	D	C	–	C	A	–	–	D	D	D	D	D	D	D	A	C	A	A	A	A	A	A	A
Trichlorethylene	D	B	A	D	A	C[1]	C[1]	A	C	D	A[1]	D	A[1]	A	C[1]	C[1]	D	A	–	–	C	D	D	D	D	C	D	A	A[1]	B	A	C	B	B	A	A
Trichloropropane	D	A	–	–	A	A	–	–	–	D	–	–	–	D	–	–	D	A[1]	–	–	A	–	–	–	A	A	–	A	–	A	A	A	A	A	–	A
Tricresylphosphate	–	C	A	D	–	A	A[2]	–	–	A	–	D	D	–	A[1]	B[1]	–	A	–	–	D	A	D	D	D	U	C	B	D	A[2]	A	–	A	A[2]	B	A
Triethylamine	–	D	A	A	A	A	A[1]	–	–	B	–	A	A[2]	–	D	–	–	A	–	–	A	–	–	–	B	A	–	A	–	–	A	A	–	A	–	A
Turpentine	–	A[2]	A	A	A	B	A[1]	–	A	A[1]	A	B[1]	A	–	B[1]	C[1]	C	A	–	B	A	D	D	D	D	A	D	A	A	A	C	–	B	A	B	A
Urine	–	A	A	A	–	A	A[1]	–	–	A[2]	–	A	A	A	A	A[2]	–	A[1]	–	–	A[1]	A[1]	–	–	D	A[1]	–	A[1]	B	A	C	A	–	A	–	A
Varnish	–	A	A	–	A	A	C[1]	–	A	D	–	D	–	A	A	C[1]	–	A	–	–	B	D	D	D	D	B	D	A	A[1]	–	A	C	–	A	–	A
Vegetable Juice	–	A	–	–	–	A	A	–	A	A	–	–	–	A	–	–	–	–	A	–	C	–	–	D	C	C	–	A	A	A	C	D	–	C	–	A
Vinegar	B	B	A	A	A[1]	A	C	–	A	A[1]	A	A[2]	B	–	A	B[1]	A	A	A	B	B	A	A	B	B	B	A	A	B	A	C	C	A	A	A	A
Water, Acid, Mine	B	A[1]	A	A	A	A	B[1]	A	A	–	A	A[2]	B	–	A	A[2]	A	A	–	B	A	A	–	B	C	A	B	A	C	A	C	C	A	A	A	A
Water, Distilled	A	C	A	A	A	A	A[1]	A	A	A	A	A[2]	A	A	A	A[2]	A	A	A	B	A	A	–	A	A	A	–	A	A	A	D	D	A	A	A	A
Water, Fresh	A	A[2]	A	A	A	A	A[1]	A	A	A	A	A[2]	A	A	A	A[2]	A	A	A	B	A	A	–	A	A	A	B	A	B	A[1]	A	A	A	A	A	A
Water, Salt	–	A	A	A	A	A	A[2]	A	A	A	A	A[2]	A	A	A	A[2]	A	A	A	B	A	A	–	A	A	A	–	A	B	A	D	A	A	B	A	A
Weed Killers	–	A	–	–	–	A	A	–	–	–	–	–	–	–	–	–	–	–	–	–	A	–	–	–	C	A	–	A	C	–	C	–	–	A	–	A
Whey	–	A	–	–	–	A	–	–	–	–	–	–	–	–	–	–	–	–	–	–	A	–	–	–	–	A	–	A	B	–	–	–	–	A	–	A
Whiskey & Wines	–	A	A	A[2]	A	B	A[1]	–	A	A[2]	–	A[2]	A	A	A	C	–	A	A	C	A	A	A	A	A	A	A	A	C[1]	A	C	D	–	A	A	A
White Liquor (Pulp Mill)	–	D	A	–	–	A	A[1]	–	A	A[1]	–	A[2]	A[1]	A	A[1]	A[2]	–	A	–	–	A	–	–	–	A	A	–	A	–	A	D	C	A	A	–	A
White Water (Paper Mill)	–	B	–	–	–	A	A	–	A	D	–	A	–	A	A	–	–	–	–	–	–	–	–	–	A	–	–	A	–	–	A	A	–	A	–	A
Xylene	D	A	A	–	A	A	A[2]	A	C	D	A	D	A	A	C[1]	C[1]	D	A	–	D	D	D	D	D	D	D	D	A	A[1]	A	A	A	A	A	A	A
Zinc Chloride	–	C	A	A	A	A	C[1]	–	A	A[1]	A	A[2]	A	A	A	A[1]	A	A	A	B	A	A	A	A	A	A	–	A	D	B	D	D	B	D	A[1]	A
Zinc Hydrosulfite	–	C	–	–	–	A	A	–	B	A	A	–	–	A	–	–	–	–	–	–	A	A	–	–	A	A	–	–	D	–	D	D	–	A	–	A
Zinc Sulfate	–	C	A	A	A	A	C[1]	–	A	A[1]	A	A[2]	A	A	A	A[2]	–	A	–	B	A	A	A	B	A	A	A	A	D	B	C	C	B	B	A	A

Delrin, Hypalon, Neoprene, Teflon, Viton—Reg TM E.I. du Pont de Nemours & Co.

Ryton—Reg TM Phillips Petroleum Co.
Tygon—Reg TM Norton Co.

Kynar—Reg TM Pennwalt Corp.

1	CUSTOMER SERVICE
2	SPECIFICATIONS
3	SAFETY INSTRUCTIONS
4	INSTALLATION & SETUP
5	GENERAL DESCRIPTION
6	OPERATION
7	PREVENTIVE MAINTENANCE
8	TROUBLESHOOTING
9	DRAWINGS
10	RECOMMENDED SPARE PARTS
11	MANUFACTURERS LITERATURE
12	RETURN POLICY
13	OPTIONAL EQUIPMENT

TABLE OF CONTENTS

EQUIPMENT INSTALLATION

GENERAL INFORMATION 4.1
CUSTOMER SERVICE 4.1
PROCESS 4.1
AIR QUALITY SPECIFICATIONS 4.1
CUSTOMER INTERFACE 4.2
PRESS INSTALLATION 4.3
- RECEIVING AND HANDLING 4.3
- RECOMMENDED MOVING PROCEDURE 4.3
- STORING THE J-PRESS 4.4
- FOUNDATION REQUIREMENTS 4.4
- PROCESS CONNECTION 4.5

COLD WEATHER & HIGH TEMPERATURE OPERATION 4.6

COMPONENT INSTALLATION & SETUP

CENTER FEED PIPE 4.7
DISCHARGE PIPE 4.8
CLOTH INSTALLATION- NON-GASKETED PLATES (If Applicable)4.8
CLOTH INSTALLATION- GASKETED PLATES (If Applicable) 4.9
GASKET INSTALLATION- GASKETED PLATES (If Applicable) . 4.10
MEMBRANE PLATES (If Applicable) 4.10
HYDRAULIC POWER UNIT (M-71) 4.11
AUTOMATIC PUMP CONTROL SYSTEM 4.12
PLATE SHIFTER SEMI-AUTOMATIC 4.13

GENERAL

Before beginning an installation, read and follow all of the instructions in this part of the manual. Pay close attention to the WARNING, NOTE, and CAUTION statements to prevent personal injury and damage to the equipment.

CUSTOMER SERVICE

This Installation & Startup Section gives general guidelines for installation of the J-Press. The customer is responsible for installation and must use his judgment and knowledge of his equipment, procedures, and people to determine the best installation method. If there are any questions regarding interface, hookups, or installation, contact the JWI Customer Service Department for further information. JWI will not be liable for recommendations given by anyone other than JWI.

PROCESS

Consult the temperature/pressure curves and chemical compatability chart in the safety section of this manual to insure safe and proper operation of the press.

AIR QUALITY SPECIFICATION

Use the following guidelines for air hookup to the filter press.

Air Blow, Core Blow can use standard plant air.
- Maximum particle size- 40μm

Air over Oil Hydraulic System, Air-Operated Plate Shifter, Automatic Pump Control System require Instrument Quality Air (ANSI/ISA-57.3 - 1975, R1981)
- Maximum particle size- 3μm
- Oil content to be less than 1 ppm wet weight or v/u under normal operating conditions.
- Pressure dew point- at least 18°F (10°C) below the lowest ambient temperature.
- Air shall be free of all corrosive contaminants and hazardous substances.

CUSTOMER INTERFACE.

The following connections may be required. Review the list, then consult the Press Assembly Drawing in the drawings section of this manual for specific connections, locations, and capacities required.

ELECTRIC
- Volts, Phase, Current

AIR
- Press Closure
- Air Operated Plate Shifter
- Air Blow
- Core Blow
- Cake Discharge

FEED CONNECTIONS
- Standard Slurry Feed
- Double-End Slurry Feed
- Precoat
- Wash
- Membrane Plate Squeeze

DISCHARGE CONNECTIONS
- Filtrate
- Launder
- Core Blow

ANCHOR
- Filter Press.
- Electrical panel.
- Drip tray doors.
- Pump skid.

PRESS INSTALLATION

Receiving and Handling

Inspect all equipment immediately upon receipt. If any damage occurred during shipping, notify JWI and the carrier for claims inspection.

Recommended Moving Procedure

Carefully remove the J-Press from the transport vehicle. JWI recommends that two lifting straps and a spreader bar be used to move the unbolted press from the skid onto its mounting foundation. Smaller presses may be removed from the transport vehicle using a forklift if the press is mounted on a skid. In those cases, lift only by the skid.

Consult JWI if you need help determining the proper lifting procedure! Use qualified riggers and appropriate equipment when lifting and moving the press.

CAUTION: Insure that the lifting device is of sufficient capacity for lifting the J-Press. For presses with 1000mm plates and larger, eyebolts may not have sufficient capacity. If no eyebolts were shipped with the press, do not use the taps in the head and cylinder brackets for lifting. These were for manufacturing purposes only.

Do not stand under press when lifting or moving.

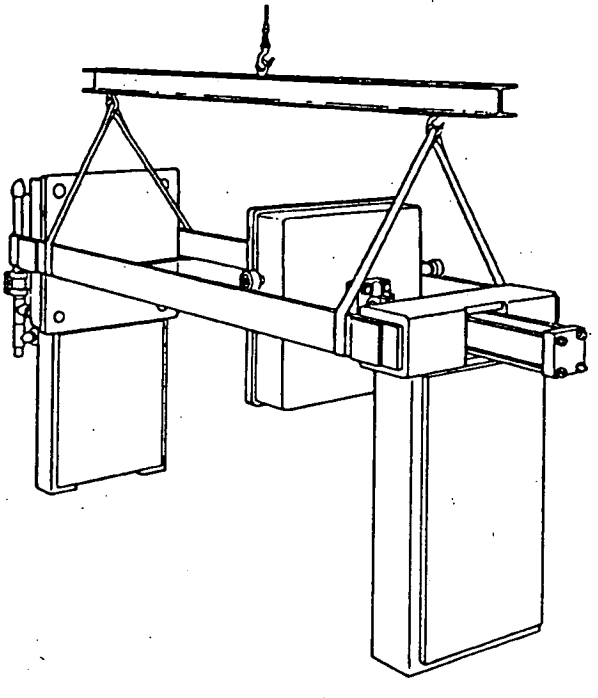

STORING THE J-PRESS

If the J-Press is stored for any length of time before installation, JWI recommends that it be stored out of direct sunlight and a temperature range of 40 - 90° F (4 - 32° C).

JWI recommends that the user activate the closing cylinder at least once a month during extended storage periods to insure that seals stay flexible.

FOUNDATION REQUIREMENTS

Prior to the installation of the J-Press, a level and square foundation must be prepared. Reference the press drawing for mounting details.

CAUTION: Allow suitable time for the foundation to cure before installing the J-Press.

MOUNTING AND LEVELING THE J-PRESS

1.
Place the J-Press on the foundation and level the press horizontally and vertically.
2.
Square the press by measuring diagonally across the corners of the press.
3.
Tighten the head leg bolts.
4.
Install the plates if they were shipped separately.
5.
Close the press to full operating pressure.
6.
Tighten the cylinder bracket leg bolts while the press is under full pressure. NOTE: for presses larger than 800mm, it is recommended that the cylinder end of the press be allowed to "float" for stretching of the side bar. Consult JWI if further assistance is needed on this procedure.

PROCESS CONNECTION TO THE J-PRESS

Make the necessary adjustments until the press is properly mounted (leveled, squared, and lagged) before continuing with these instructions.

Connect the center inlet on the J-Press manifold to the discharge outlet of the feed pump. The feed run line should be the same size as the inlet on the manifold. The feed line must not be supported by the press. Consult JWI for pump sizing assistance.

CAUTION: Use appropriate pressure and temperature rated pipe to connect the feed pump to the J-Press feed pipe. Consult the temperature/ pressure curves and chemical compatability chart in the safety section of this manual to insure safe and proper operation of the press.

Install the drain pipe to the bottom outlet of the J-Press manifold as shown below.

CAUTION: The filtrate drains from the press by gravity. Therefore the outlet of the drain pipe must be below the level of the discharge manifold outlet.

NOTE: If this arrangement is not feasible, consult JWI to determine alternative piping, valve, and pump arrangements that must be made to insure correct operation of the J-Press.

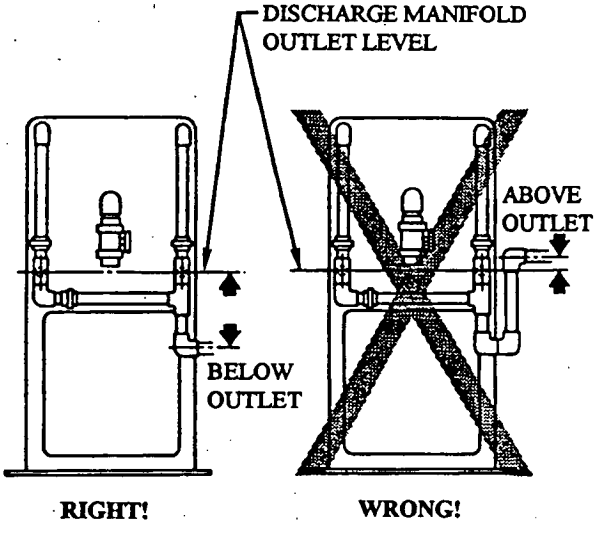

COLD WEATHER & HIGH TEMPERATURE OPERATION

Standard or high pressure plates (polypropylene) cannot tolerate temperature gradients or operation at temperatures of 40° F (4° C) or lower. The plates must also be within 60° F (16° C) of the temperature of the slurry, and operate within the temperature range indicated on the temperature/pressure curve found in the Safety section of this manual. Under these conditions, the plates must be preheated before sludge can be pumped into the press. The plates can be preheated with warm water or warm air to raise the temperature slowly to about 45-65° F (7-18° C) for normal operation.

1. The filter press must be piped to an external tank that can be heated, raising the temperatue of the preheat filtrate slowly. Hot filtrate cannot be pumped directly, or the plates will encounter thermally shock. This can cause cracking of the plates.

2. Pump the preheat filtrate through the press for 30 minutes or until the discharge filtrate is within 10° F (6° C) of the infeed filtrate (the valves should be set up the same way as for precoat with a slow rate of flow through the press, this gives the preheat filtrate a chance to heat the plates slowly).

3. Proceed with normal processing.

Cold Weather Shutdown

Following are the steps required for cold weather shutdown (35° F (2° C) or lower).

1. Immediately after the last cycle, close the press and valves for a blowdown, and run air through the plates and cloths for 30 minutes. This removes most water from the cloths.

2. Open the lower left valve to remove the filtrate from that side of the plates, blowing air for about 10 minutes to remove water from the discharge eyes.

3. Pressurize the press by closing all valves, and opening the air blow valve, pressurizing the press with air pressure to about 40 psi (2.7 bar). After the press is pressurized, open the feed pipe valve to blow out the sludge in the pipe between the pump and press. Do the same for the precoat pump if applicable.

4. Disconnect the inlet hose to the pump and insert a similar hose into a barrel of premixed antifreeze. Run the pump slowly with about 10 psi (0.7 bar) air pressure until some antifreeze comes out the end of the lower discharge eye. Do the same for the precoat pump if used.

5. Blow out all hoses. Drain any water in the air compresor tank if supplied.

The goal is to remove all water in anything that can freeze and break.

CENTER FEED PIPE

If the press is leaking (around the locknut on the 470mm size or from the bottom leg drain holes on 630mm and larger size presses) during start-up of the feed process, the problem is usually leakage past the center feed quad ring seal.

The quad ring may not seal for several reasons. The causes and solutions are as follows:

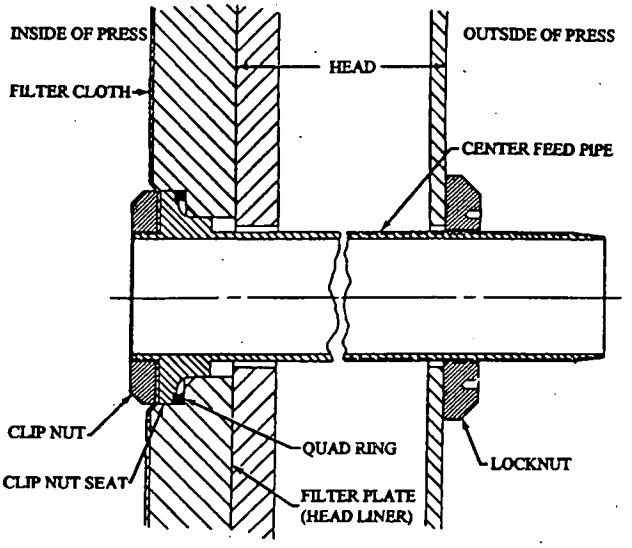

CAUSE	REMEDY
The locknut on the outside of the press head loosened during shipment.	Tighten the locknut using a spanner wrench, pliers, or pipe wrench.
Extra field piping and/or manifolding was added to the center feed pipe without proper support. Unsupported loads on the center feed pipe can cause the pipe to move off axis and unload the quad seal on one side.	Properly support all external piping. Loosen the piping from the JWI supplied piping and/or valve and realign the feed pipe so that it is perpendicular to the plate surface. Tighten the locknut and reinstall the supported piping.
The center feed pipe was rotated during the field installation of extra piping/ manifolding. This could unseat the quad seal causing leakage around the seal. No feed pipe movement will reseat it.	1. Open the press and shift all of the plates to the open position (toward the cylinder head). The inside surface of the head plate will have a centrally located clip nut approximately 0.5" (13mm) thick which retains the filter cloth on the clip nut seat. This clip nut should be removed with a spanner wrench or pliers. 2. a. If the press has non-gasketed plates, lift the cloth off the top cloth pins. b. If the press has gasketed plates, the cloth must be removed from the caulking groove so that the top 2/3 can be peeled down to expose the center feed and allow the movement of the center feed pipe. 3. Loosen the locknut and back it off 2 to 3 inches (50 mm to 75 mm). Carefully push the center feed pipe out of its counterbore in the head plate. This allows access to the quad seal and its mounting land. Reinstall the seal onto the land. A few small drops of super glue may be applied to help retain the seal. 4. Reinstall the liner pipe into its counterbore and tighten the locknut making sure that the pipe remains perpendicular to the plate. Reinstall the filter cloth.

DISCHARGE PIPE

The discharge pipes at the four corners of the head are used for draining clear filtrate from the plate stack. The discharge pipes are simply threaded into the head plate. To remove a discharge pipe, use a strap wrench to grasp the threads of the discharge pipe. A pipe wrench may be used, but this can damage the threads. If using a wrench, be sure to clamp on an area of the threads that is not used for engagement to other components.

CLOTH REMOVAL & INSTALLATION NON-GASKETED PLATES (If Applicable)

Cloth Removal

1. Cut the ties on the vertical sides of the plates that hold the two cloth faces together outside the plate.
2. Remove cotter pins and lift the cloth off the cloth dogs on the top of the plate.
3. Pull the cloth through the center feed eye of the plate.

Cloth Installation

1. Fold one side of the cloth and insert it through the center feed eye of the plate.
2. Lift the cloth over the cloth dogs on top of the plate.
3. Join the two edges on the sides of the filter plate with wire ties or similar clips.

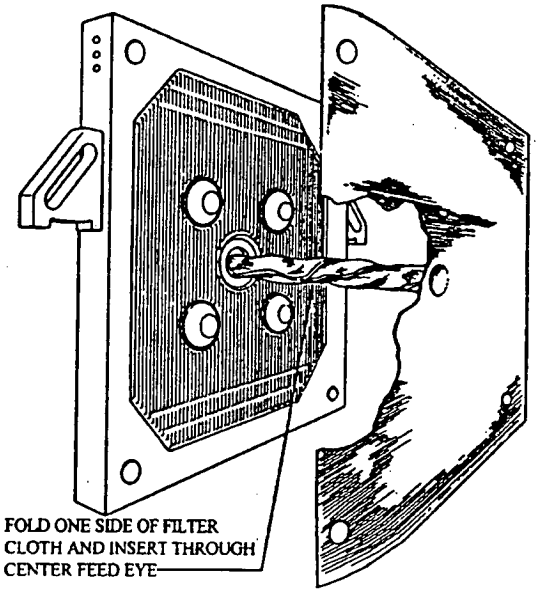

CLOTH REMOVAL & INSTALLATION- GASKETED PLATES
(If Applicable)

Cloth Removal

To remove a filter cloth from a gasketed plate, insert a thin bladed screw driver into the groove at the outer edge of the caulking and pry out a small section of the cloth. Grasp the sash cord caulking with a pliers and pull the remaining cloth out of the caulking groove. Do this on both sides of the plate. Pull the cloth through the center feed eye of the plate. After the cloth is removed, inspect and remove any accumulated solids from the groove before inserting the new cloth.

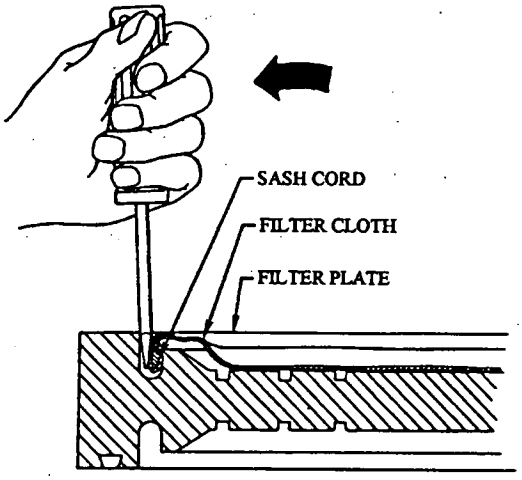

Cloth Installation

The tool for installing the retaining material (O-ring caulking and sash cords) is a simple wedge of polypropylene or some other non-shattering type material. The recommended size for the tool is 1" (25mm) thick x 3" (75mm) wide x 8" (200mm) long with one end tapered down to 5/16" (8mm) thick (available from JWI- part #10583800).

CAUTION: Do not use a metal wedge since this may damage the cord or filter cloth.

Place the cloth against the plate and tap in a small section of the sash cord or O-ring on the top to hold the cloth in position. Line up and caulk the diagonal sections first to insure proper alignment of the cloth. Distribute the caulking on the sides, top, and bottom by caulking in the center of these long sections first. Proceed to insert the balance of the caulking, insuring that the caulking is distributed evenly. Even though there may appear to be a surplus of material, this can be worked in easily.

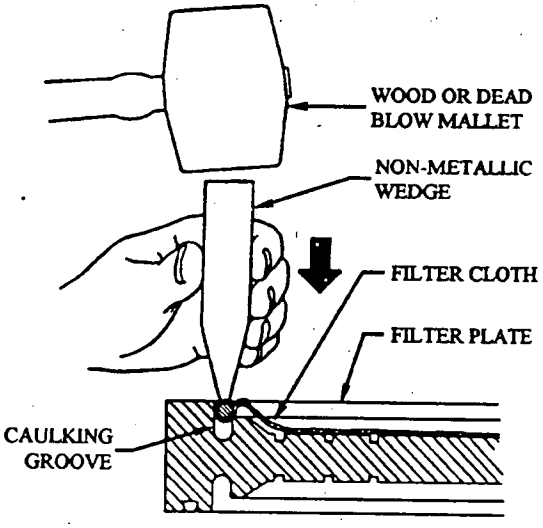

REGASKETING THE FILTER PLATES
(If Applicable)

1. Insert the gasket starting at the bottom center of the filter plate using a wood or plastic mallet. Push the gasket into the groove around the outer edge of the plate until it mates at the center of the plate. Many installers will incorrectly stretch the gasket material. This reduces the cross section, making it easier to insert. However, by stretching the gasket material for easier installation, it has a tendency to creep and open the butted joint of the gasket, causing a leak.

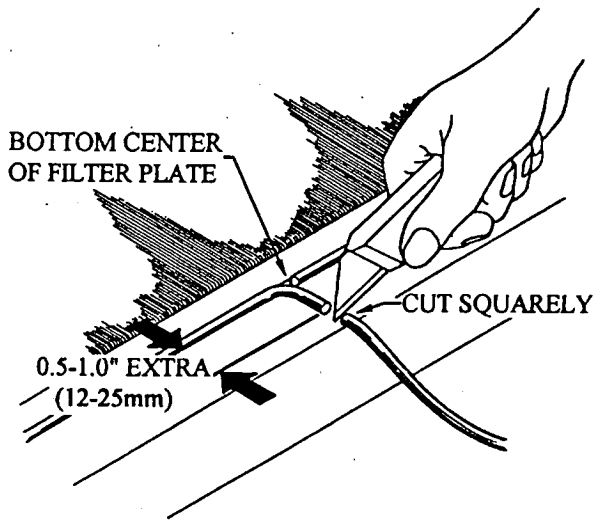

2. Cut the gasket approximately 1/2" (12mm) to 1" (25mm) longer than required, cutting the end squarely.

3. Apply one or two drops of Eastman 910 (or equivalent "super glue") to one end of the gasket and quickly join it to the other end. Hold it under hand pressure for approximately 30 seconds. Then crowd the excess gasket into the groove to insure fullness of gasket material.

Install the discharge eye gaskets in the same manner.

Gasket life will depend on many factors, such as length of filtration cycle, temperature, and excessive closing force. Gasket replacement should take place if the gasket appears to be delaminating or shredding into small particles. Also, if excessive temperatures exist and cycles are very long, the Nordel elastomer (standard gasket material) may go into additional cure, causing it to harden slightly. If the gasket life of the Nordel elastomer is unsatisfactory, contact JWI for a suitable replacement.

NOTE: When gasketed plates are first put into use, the new gasket material may be slightly sticky or gummy and cause gaskets to pull out of the grooves when plates are separated. This condition is eliminated as product film is built up. If any gaskets show this characteristic, apply a silicone spray until the press has been used several times.

MEMBRANE PLATES
(If Applicable)

Membrane plates have a separate operation manual. See Manufacturers Catalogs Section.

HYDRAULIC POWER UNIT (M-71)

The maximum hydraulic pressure has been factory set and tested. If it is necessary to re-adjust, the following procedure should be followed.

Setting Relief Valve Pressure

1. The pressure relief valve setting should be 400 psi (27 bar) above maximum hydraulic working pressure of the press. See the specification sheet in Section 2 of this manual or inside the hydraulic cabinet door in the upper left corner for correct pressures.

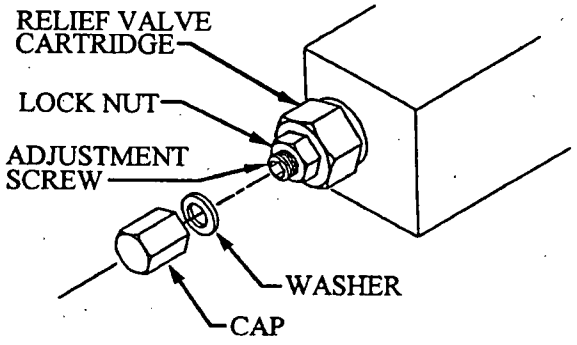

2. Remove cap and washer from adjusting screw.

3. Close the press and allow hydraulic pump to build clamp pressure.

4. Turn air pump regulator clockwise to increase clamp pressure. This should be brought slightly higher than the relief pressure setting.

5. Adjust the relief valve setting- loosen the locknut and turn the adjustment screw clockwise to increase relief pressure setting and counter-clockwise to decrease relief pressure setting.

6. Tighten the locknut and check relief pressure setting by turning off the pump, and momentarily opening the press to drop pressure to zero. Close the press and insure that pressure does not exceed maximum pressure recommended.

WARNING: Do not allow pressure to exceed 400 psi (27 bar) above the recommended clamp pressure. This places excessive forces on the press and could lead to component failure or personal injury!

7. Relief pressure setting is now complete. Re-install the washer and cap.

8. The Operating Pressure can now be adjusted.

Setting Operating Pressure

1. Insure relief pressure has been set properly.

2. Return the hydraulic pressure back to zero by momentarily turning the selecotr valve to the "Open" position until hydraulic pressure drops to zero on the panel gauge.

3. Turn the air pump regulator counter-clockwise 2-4 turns to bring the air pressure down to about 20 psi (1.4 bar).

4. Close the press and turn the hydraulic pump switch to "On".

5. When the pump stalls, turn the air pump regulator clockwise until Operating Pressure is reached. Adjust the regulator in small increments, allowing the pump to stall between adjustments.

6. To check adjustment of working pressure, turn hydraulic pump switch to "OFF" and drop pressure by momentarily turning selector switch to open position until hydraulic pressure drops to zero on panel gauge. Once pressure has dropped to zero, return selector switch to the "Close" postion and turn hydraulic pump on.

7 Allow hydraulic pump to build hydraulic pressure, watch the pressure gauge and note at what pressure the pump stalls. Return to step 4 if working pressure is incorrect.

8. If the pump stalls at the correct working pressure, the adjustment is done.

AUTOMATIC PUMP CONTROL SYSTEM

Initial Hookup

1. Mount the control panel near the filter press (unless factory installed).
2. Connect electrical service (see schematic).
3. Connect wires from the low hydraulic pressure switch, located in the pump cabinet, to the control panel (unless factory installed).
4. Install the air piloted regulator at the feed pump (see schematic).
5. Connect the pilot line and the pressure gauge line from the panel to the pilot regulator.
6. Connect a filtered and regulated air line supply to the control panel.
7. Air supply should maintain not less than 100 psi (7 bar).

Setup

NOTE: Disconnect all power to control panel prior to making adjustments.

Timer and Regulator Settings

JWI recommends the following timer and regulator settings only as a starting point. These values will change depending on the specific process. Some slurries such as metal hydroxides dewater easily and have process times of only a few hours or less. Other slurries such as biological sludges are slower to dewater and may take 8-10 hours or more. Consult JWI if you need assistance setting filtration parameters.

Timer	Time	Regulator
1TR	30 minutes	Stage 1 - 25 psi (1.7 bar)
2TR	30 minutes	Stage 2 - 50 psi (3.4 bar)
3TR	30 minutes	Stage 3 - 75 psi (5.2 bar)
4TR	1 minute	Stage 4 - 100 psi (6.9 bar)

The pressure settings of the solenoid controlled regulators will only show when the system is in operation and will read out on the regulated pressure gauge located on the control panel.

Pressure Switch Setting

The solenoid controlled regulator number four (4) must always carry a 5 psi (0.3 bar) higher reading than the adjustable air pressure switch setting.

See the operation section for detailed operation description.

PLATE SHIFTER SEMI-AUTOMATIC

The JWI air powered plate shifter has been completely pre-tested and all necessary settings made at the factory. Remove all the banding and blocks from the unit before operating. Roll the plate shifter from one end of the press to the other making sure that it is moving freely. Connect the self storing air line to the top of the plate shifter with the fittings enclosed. The self storing air line should be installed in an upward position away from the plate shifter so as not to hinder its operation. Connect a 3/8" air line to the self storing air line using the filter regulator unit furnished. Mount the filter regulator in a position which is easy to service. Adjust the air pressure regulator for 40 to 60 psi (2.7 to 4.1 bar). Move the shifter the full length of travel from one end of the press to the other, making sure the self storing air line does not in any way hinder the movement of the plate shifter.

1	CUSTOMER SERVICE
2	SPECIFICATIONS
3	SAFETY INSTRUCTIONS
4	INSTALLATION & SETUP
5	GENERAL DESCRIPTION
6	OPERATION
7	PREVENTIVE MAINTENANCE
8	TROUBLESHOOTING
9	DRAWINGS
10	RECOMMENDED SPARE PARTS
11	MANUFACTURERS LITERATURE
12	RETURN POLICY
13	OPTIONAL EQUIPMENT

AUTOMATIC PUMP CONTROL SYSTEM

The Automatic Pump Control System is designed to automatically increase the feed pump pressure during the filtration cycle. Low initial feed pressure allows a soft layer of slurry particles to be deposited on the filter cloth. This layer becomes the filtering media, enhancing the filterability of the incoming slurry. High initial feed pump pressures can build a very tightly packed, impermeable layer of solids on the filter cloth, restricting the flow of slurry, and ultimately the density of the cake.

The Automatic Pump Control System automatically increases the feed pressure in four intervals throughout the fill cycle. These intervals and pressure are fully adjustable to suit the type of slurry and the percentage of solids. Cycle completion and automatic shutdown occur by monitoring the cycling of the feed pump at the final pressure.

Also incorporated into the system is a low hydraulic pressure safety shut down device. Any time the hydraulic pressure drops below the preset limits, the system completely shuts down, eliminating any possible leaking. The control panel features various switches, pilot lights, and timers to give at-a-glance monitoring of the system.

Variables

1. Timers 1TR, 2TR, and 3TR are duration timers, simply running the designated pressure through the time specified. Timer 4TR monitors the time between strokes of the feed pump, it is not a duration timer. Therefore, slight changes in timer 4TR can greatly impact the cycle time and cake quality.

2. Pressure regulator four must be set at the terminal filtration pressure. This must not exceed the designed pressure of the JWI press.

3. The pressure switch should be set 5 psi (0.3 bar) or less below the terminal filtration pressure. The pressure switch operates timer 4TR by monitoring the air pressure to the air-driven pump. When the pressure switch achieves its setting, timer 4TR energizes and begins countdown. If the pump cycles, pressure is temporarily lost to the pressure switch, and timer 4TR starts countdown again. If the pump does not stroke during the designated time, timer 4TR times out, pumping stops, and the "Press Full" light comes on.

AIR BLOW

NOTE: The manifold supplied includes air blow capabilities. Your particular process may or may not require air blow.

Air blow refers to the process of removing excess water from the cloth, cake, and discharge eyes. Following a filtration cycle, the feed line valves are closed, and the

manifold valves are closed in such a way that discharge can only exit from the lower right filtrate eye. The air valve is then opened and air enteres the press through the upper left port and fills the drainage area. The air passes from the back side of the cloth, through the cake, and the opposite cloth, and then out the lower right port, leaving the press via the piping system. The air forces the excess water from the cake and on the drainage surface. This helps loosen the filter cake, improves cake dryness, and drains the remaining liquid in the bottom discharge eyes.

PLATE SHIFTER SEMI-AUTOMATIC

The plate shifter is completely air operated and requires no electrical connections. The plate shifter is controlled by a push button switch with a deadman safety feature. The operator must maintain pressure on the control button or the shifter will stop moving plates and return to the non-functioning position. All operating components are in an enclosed housing for maximum protection. The air operated shifter enables one man to shift and clean the plates easily without assistance.

the chamber and filtration ports. The gasketed cloth has a high-density sash cord sewn around the cloth's perimeter which is caulked into a groove on the plate.

The type of cloth used is determined by the type of process or application performed by the J-Press, the operating environment, and the performance required by the filtering media (filter cloths).

The filter cloths come in many different materials including polypropylene, polyester, cotton, and other synthetic materials. The cloths are made from either monofilament fibers, multifilament fibers, or spun fibers. The smooth surface characteristic of monofilament fibers can help to improve cake release properties. The uniform circumference of monofilaments also enable fabrics to be produced with consistent pore sizes. Multifilament and spun fibers are produced by twisting several smaller diameter monofilament fibers together into a single strand. They are used to produce fabrics that require a very tight weave, and fabrics where high flow rates are not critical.
Filter cloths also come in many different styles of fabric weave.

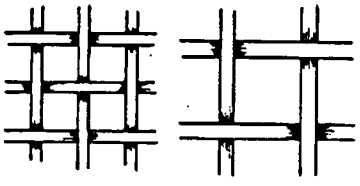

Mesh opening or pore size is also an important consideration when selecting the proper filter cloths for a particular application. The mesh opening or pore size is determined by the number of fibers, size of the fiber, and the type of weave. These factors in turn govern flow rates, particle retention, and the strength of the fabric itself. As shown to the left, these two fabrics, having the same type of open area, will have similar flow rates, but the fabric on the left will retain finer particles.

The cloths can also be finished in several ways: Heat set, scoured, calendered, single-glazed, and double-glazed.

PROCESS MANIFOLD

The Process Manifold Assembly consists of all the plumbing, process valves, and control valves necessary for process flow into and out of the filter press. The safe state is normally open for discharge valves, and normally closed for feed valves.

FILTRATION CYCLE (General Information)

General Rules of Filtration

- Build pressure slowly. Building pressure too fast leads to cloth or cake blinding.
- Scrape plates between cycles if cake does not completely fall out.
- Insure sufficient quantity of slurry to complete cycle. Use backup plate if sufficient

The drainage surface is at the most recessed point of the chamber and is made up of "pips" or "ribs." The pips support the cloth and allow the filtrate to drain to the ports.

The filtrate ports discharge the filtrate (the liquid part of the substance being filtered) to the discharge eyes. The filtrate ports are at the four corners of the plate.

The stay bosses are approximately the total thickness of the plate. The function of the stay bosses is to stabilize the web (drainage surface) of the plate.

The plates have identification marks to aid the operator in placing or replacing plates in the press. Each plate is designed as either a one-button or three-button plate. A one-button, or non-wash plate, means that the small air/wash water ports are located near the lower and upper right corners of the plate. A three-button, or wash plate, has the small ports located near the lower and upper left corners. The alternating plate provides the porting necessary to begin the wash and air blowdown processes.

The order of the plates must follow a 1,3,1,3,1,3... sequence, beginning at the head end of the press, to assure proper air blowdown and wash cycles.

Gasketed plates allow less leakage than non-gasketed plates due to an o-ring seal around the chamber and filtration ports. The identification marks are visible on the side edge of the plates as shallow drill marks.

The cloth is retained in a machined groove (approximately 3/8 inch (9.5 mm) wide by 3/8 inch (9.5 mm) deep) located around the outer edge of the plate recess. The sewn-in sash cord filter cloths are made by sewing a high density polypropylene sash cord around the outer edge of the cloth. Cord diameter depends on type of cloth and relative thickness being used. In most cases, a No. 12 (3/8 inch (9.5mm) diameter) cord is used.

FILTER CLOTHS

JWI has supplied the cloths based on criteria supplied by the customer, or based on sample processing in JWI's process laboratory. Should the process change, JWI recommends that the cloth type be evaluated for suitability. Following is information to help you understand cloths and how they work. Detailed questions should be directed to the JWI's lab directory noted in the customer service section of this manual.

Cloths for non-gasketed plates are hung over the plate, extending from top to bottom, and are held in place by eyelets which fit over the cloth-pins on top of the plates. With the non-gasketed plate, the filter cloth provides the seal between the plates. Leakage will occur during operation even though JWI supplies the non-gasketed plate cloths with latex edging. The latex will cut down the wicking action somewhat, but will not eliminate it. The gasketed plate allows less leakage than the non-gasketed plate due to an o-ring seal around

This system provides self-compensating pressure for stack contraction or expansion. If stack contraction occurs, the hydraulic thrust reduces, causing an imbalance in the pump. The pump then cycles to restore the hydraulic thrust to the desired setting.

During many applications involving polypropylene filter elements, especially when filtration temperatures are high and wash temperatures low, filter stack expansion and contraction can create increased stresses on the press. Under such circumstances, excessive leaking, frame bowing, and even structural failure of the press may result due to excessive clamping force between the plates. The excess hydraulic pressure that results bleeds back to the hydraulic reservoir through a relief valve, maintaining the desired hydraulic thrust.

A pressure difference between clamping force and relief pressure is provided for process startup. At the beginning of a process cycle, a temporary peak is seen in the hydraulic pressure. This is caused by initial slurry flow into the press. If the relief pressure is set too closely to the clamping pressure, the relief will dump hydraulic fluid back to the reservoir. This will cause leaking since the follower has moved slightly and allowed movement of the plates. It is therefore necessary to maintain at least a 400 psi (27 bar) difference between the clamping force and the relief setting.

BACKUP PLATE

A backup plate (a blank plate) can be inserted in a J-Press plate stack to isolate the filter plates between the backup plate and the follower. The backup plate allows a smaller batch to be processed since a smaller number of chambers are used in the process.

The tail plate MUST be relocated and inserted in front of the backup plate to form a complete chamber. Together the two plates provide the strength needed for safe press operation.

For correct press operation, proper plate sequencing (1,3,1,3...) must be followed when relocating the tail plate and backup plate.

RECESSED CHAMBER PLATES- GASKETED

The recessed chamber plate has the following features: plate recess, feed eye, filtrate discharge eyes, filtrate ports, drainage surface, and stay bosses.

Each plate recess is one half of a single chamber. Two plates pressed together create the whole chamber. The slurry passes through the feed eye, to the chambers where the solid portion of the slurry is deposited.

PRESS FRAME

The press frame incorporate three primary components- the head, the cylinder bracket, and the sidebars.

The head end of the press serves as the fixed loading surface for the plate stack. It supplies the opposing force necessary for holding the plate stack together during processing. The head also serves as the interface between the feed inlet and discharge connections.

The cylinder bracket is the mounting surface for the hydraulic cylinder.

The sidebars connect the head and cylinder bracket. They support and guide the plate stack, and maintain the plate stack position for proper sealing. The sidebars also support the follower.

FOLLOWER

The follower is the moving portion of the filter press used to compress the plate stack for filtration cycles. The JWI follower uses a pin and clevis arrangement to attach to the hydraulic cylinder. This serves two functions:

- It allows the follower to tilt slightly if the plate stack is not square due to cake buildup or other factors. This allows better sealing during a process cycle.
- It minimizes stress on the hydraulic cylinder rod.

CYLINDER & BOOT

The cylinder moves the follower opened and closed, and provides the clamping force necessary to seal the plate stack during a process cycle. A boot around the cylinder rod provides protection from dirt and process.

HYDRAULIC POWER UNIT (M-71)

The hydraulic system provides the hydraulic fluid flow to the hydraulic cylinder. The pumps convert plant air to hydraulic pressure through a ratio system that uses a large area air piston at low pressure to produce a high hydraulic pressure on a small area hydraulic piston. As the hydraulic output approaches the desired preset pressure, the pump slows down and stalls when the hydraulic force balances the air force. During filtration operations, the air supply is maintained to the pump. The hydraulic force is then maintained with no additional power supplied.

TABLE OF CONTENTS

PRESS FRAME 5.1
FOLLOWER 5.1
CYLINDER & BOOT 5.1
HYDRAULIC POWER UNIT (M-71) 5.1
BACKUP PLATE 5.2
RECESSED CHAMBER PLATES- GASKETED 5.2
FILTER CLOTHS 5.3
PROCESS MANIFOLD 5.4
FILTRATION CYCLE (General Information) 5.4
AUTOMATIC PUMP CONTROL SYSTEM 5.5
AIR BLOW 5.5
PLATE SHIFTER SEMI-AUTOMATIC 5.6

1	CUSTOMER SERVICE
2	SPECIFICATIONS
3	SAFETY INSTRUCTIONS
4	INSTALLATION & SETUP
5	GENERAL DESCRIPTION
6	OPERATION
7	PREVENTIVE MAINTENANCE
8	TROUBLESHOOTING
9	DRAWINGS
10	RECOMMENDED SPARE PARTS
11	MANUFACTURERS LITERATURE
12	RETURN POLICY
13	OPTIONAL EQUIPMENT

TABLE OF CONTENTS

CLOSING PROCEDURE 6.1
FILTRATION CYCLE (General) 6.1
AUTOMATIC PUMP CONTROL SYSTEM 6.2
AIR BLOW 6.3
OPENING PROCEDURE 6.4
PLATE SHIFTER SEMI-AUTOMATIC 6.4

CLOSING PROCEDURE

If the air supply is properly connected to the press, the line pressure will register on the "Line Air Pressure Gauge". Refer to the Specifications section for the required air pressure.

1. Turn the "Air Supply" switch to the "ON" position.

2. Turn the "Selector" switch to the "CLOSE" position. The hydraulic cylinder will extend and move the follower and plate stack toward the head end of the press.

The press is now closed and appears to be ready for feeding of slurry. However, the press does not have sufficient clamping force to stop leakage or squirting if the feed pump is turned on. You must perform step 3 before beginning a feed cycle!

3. Once the hydraulic cylinder is fully extended, turn on the "HYDRAULIC PUMP" switch. The air-oil pump will begin cycling, and the "Hydraulic Pressure" gauge will indicate building pressure. The cycling rate will slow as it reaches the preset closing pressure. The pump will stall at operating pressure.

The Air Supply must be left "ON" at all times, and the Hydraulic Pump must be left "ON" during the complete process cycle and only turned "OFF" when the press is ready for opening.

FILTRATION CYCLE (General)

Running the Filtration Cycle

1. Open the feed valve and all filtrate discharges valves.

2. Start the feed pump.

3. Run the feed pump until maximum feed pressure has been reached and the pump has stalled.

4. Turn off the feed pump (if manually controlled) and close the feed valve.

The cycle is now complete, and the opening procedure can be performed (unless additional cake processing is performed such as air blow or core blow).

Stopping Feed in Mid-Cycle

Although not recommended, if flow to the J-Press must be interrupted for a period of time, such as overnight, JWI suggests that you restart the feed pump at a low pressure for 5 to 10 minutes before slowly increasing the pressure to the maximum. When the feed to the press is interrupted, the build up of solid material tends to fall from the sides of the chamber and settle to the bottom of the chamber, blocking the center feed hole. Restarting the J-Press by using high feed pressure does not give the cake time to resoften and distribute evenly in the chamber. Blocking the center feed hole can cause uneven pressure build-up and possibly lead to plate breakage.

AUTOMATIC PUMP CONTROL SYSTEM

1. Turn the On/Off switch on the control panel to the "On" position.

2. Press the green "Start" button. The system starts, showing a green "System On" light. NOTE: If the green system on light is not illuminated, and the system does not start, the yellow low hydraulic pressure light may indicate the press is not completely closed or at clamped pressure. If the yellow light comes on during the filling cycle, the pump system will completely shut down.

   a. Timer 1TR energizes, opening the number one solenoid valve, directing air through the number one regulator.
      - The lapsed timer indicator starts operating and continues through the entire cycle unless shut down manually, automatically, or by the low hydraulic pressure switch.
      - A 25 psi (1.7 bar) reading registers on the regulated pressure gauge.
      - The number one regulator opens the air piloted regulator to start operating the feed pump at 25 psi (1.7 bar).
      - The feed pump operates at 25 psi (1.7 bar) through the duration of the time set on 1TR.

   b. Timer 1TR times out and 2TR energizes, opening the number two solenoid valve, directing air through the number two regulator.
      - The lapsed timer indicator continues operating through the cycle.
      - A 50 psi (3.5 bar)reading registers on the regulated pressure gauge.
      - The number two regulator opens the air piloted regulator to start operating the feed pump at 50 psi (3.5 bar).
      - The feed pump operates at 50 psi (3.5 bar) through the duration of the time set on 2TR.

c. Timer 2TR times out and 3TR energizes, opening the number three solenoid valve, directing air through the number three regulator.
- The lapsed timer indicator continues operating through the cycle.
- A 75 psi (5.2 bar) reading registers on the regulated pressure gauge.
- The number three regulator opens the air piloted regulator to start operating the feed pump at 75 psi (5.2 bar).
- The feed pump operates at 75 psi (5.2 bar) through the duration of the time set on 3TR.

d. Timer 3TR times out and 4TR energizes, opening the number four solenoid valve, directing air through the number four regulator.
- The lapsed timer indicator continues operating through the cycle.
- A 100 psi (6.9 bar) reading registers on the regulated pressure gauge.
- The number four regulator opens the air piloted regulator to start operating the feed pump at 100 psi (6.9 bar).
- The feed pump operates at 100 psi (6.9 bar). When the pressure switch achieves its setting, timer 4TR energizes and begins countdown. If the pump cycles, pressure is temporarily lost to the pressure switch, and timer 4TR starts countdown again. If the pump does not stroke during the designated time, timer 4TR times out, pumping stops, and the "Press Full" light comes on.

3. The green "System On" light turns off, and the "Full" light illuminates. The press is now ready for opening or cake purging cycles (such as air blow, core blow, or cake wash if applicable).

AIR BLOW

NOTE: The manifold supplied includes air blow capabilities. Your particular process may or may not require air blow.

NOTE: Air pressure should be set at 40 psi (2.7 bar).

1. Shut off the slurry pump.

2. For manifolds with three discharge valves, close all filtrate discharge valves.
For manifolds with four discharge valves, open the lower right filtrate discharge valve and close all other filtrate discharge valves.

3. Close the feed valve(s).

4. Open the air valve. Run air through the press for 3-5 minutes. If this does not remove all the water, longer filtration times should be performed.

5. Open the filtrate discharge valves. Gravity will drain the press. Allow several minutes for press can now be opened (or perform core blow if applicable).

OPENING PROCEDURE

Make sure the feed pump has been turned off, and the pressure has been bled down.

1. The Air Supply switch must be left in the "ON" position.

2. Turn the Hydraulic Pump switch to the "OFF" position.

3. Turn the Selector switch to the "OPEN" position. Hydraulic pressure will bleed down, then the follower will open with line air pressure.

4. When the press is completely open, turn the Air Supply to the "OFF" position. The plates can now be shifted and the press emptied.

PLATE SHIFTER SEMI-AUTOMATIC

1. Open the press.

2. Move the Plate Shifter so that the push plates are between the first two plates at the opening of the press.

3. Press and hold the rocker switch in the direction of the opening to start the shifting sequence. The push plates raise, then extend to force the filter plate to the opposite side. Motion will stop if the rocker switch is released.

4. Release the rocker switch. The push plates will lower.

5. Press and hold the rocker switch in the direction of the feed end of the press. The push plates will retract. Motion will stop if the rocker switch is released.

6. Return to step 2 until the plate stack is completely shifted.

1	CUSTOMER SERVICE
2	SPECIFICATIONS
3	SAFETY INSTRUCTIONS
4	INSTALLATION & SETUP
5	GENERAL DESCRIPTION
6	OPERATION
7	PREVENTIVE MAINTENANCE
8	TROUBLESHOOTING
9	DRAWINGS
10	RECOMMENDED SPARE PARTS
11	MANUFACTURERS LITERATURE
12	RETURN POLICY
13	OPTIONAL EQUIPMENT

TABLE OF CONTENTS

GENERAL MAINTENANCE 7.1
PLATE AND CLOTH MAINTENANCE 7.1
CLOTH WASHING 7.2
HYDRAULIC POWER UNIT MAINTENANCE 7.4

MAINTENANCE TABLES
FOLLOWER 7.5
CYLINDER & BOOT 7.5
HYDRAULIC POWER UNIT (M-71) 7.5
PROCESS MANIFOLD 7.5
PLATE SHIFTER SEMI-AUTOMATIC 7.6

GENERAL MAINTENANCE

An effective maintenance program is ultimately the responsibility of the equipment's user. If properly maintained, the JWI J-Press will provide long and trouble free service. Use the following suggestions in establishing a comprehensive maintenance program.

- Read and become familiar with this general maintenance information and the troubleshooting information.

- Create a maintenance program and follow it diligently.

- Use common sense precautions to prevent damage to the press or any part of the press.

The following information and tables should be a starting point for a maintenance program. Different slurries and factory conditions will affect press components differently. More or less frequent maintenance may be required.

PLATE AND CLOTH MAINTENANCE

Keep cloths clean. Use a spatula to scrape cake off the surface. Cake buildup can cause bending of the press frame. Excessive bending can lead to equipment failure! Keep the cloths and plates as clean as possible, especially along the sealing surface. Keep the following in mind when scraping cloths.

- Use care not to cut or rip the cloth.
- Cloths deteriorate over time and become more fragile and susceptible to tearing.
- Make sure the edge of the spatula is smooth.
- Do not tap the spatula on hard objects to remove cake from the spatula surface. This may form dents or tears in the spatula surface that can tear cloths.

The filter cloth is the initial barrier that separates the solids from the liquid, therefore, the filter cloth must remain porous to provide high filtration rates. During normal operation, the filter cloth may gradually become plugged with small particles. The particles enter the cloth and become lodged in the depth of the weave, leading to decreased filtering action. Indications of plugged cloths are:

- Initial high filtration pressure.
- Long filtration cycles.
- Wet filter cakes.

The lodged particles must be removed periodically to maintain high filtration rates and dry cakes. A high-pressure, cold water, spray unit with a capacity of 800-1200 psi (55-80 bar) and 2-10 gpm (8-38 lpm) should have sufficient capacity. A broad spray nozzle should be

used at a safe distance. If the pattern is too intense at a close distance, the cloth weave may be forced apart, leaving openings that allow sludge . Contact JWI for information on availability of these units if you do not have one.

If high pressure washing does not improve performance, carefully pull back a corner of the filter cloth and check the drainage area and discharge ports of the plate for solids buildup. If there is any buildup, the cloths must be removed, and the plates and cloth backs cleaned. Excessive buildup causes slow filtration cycles, and can lead to plate breakage.

If there is no buildup behind the cloths, slight changes in the process may have changed the dewatering characteristics. Check all process parameters and insure that there have been no changes to the slurry characteristics.

If none of the above has provided a solution, a more thorough cleaning process to dissolve the entrapped particulate will be required.

CLOTH WASHING

A recirculation cleaning method using a particulate dissolving solution is the most effective cloth cleaning method. This method circulates an acid, caustic, or cleaning solution through the press to dissolve built up particulate. The type of solution depends on the slurry. Contact JWI if you need assistance determining the appropriate solution.

Be extremely careful when handling acids or caustics! Eye protection and protective clothing is required. Should you get acid or caustic in your eyes or on your skin, rinse with water immediately and seek medical attention if necessary. Notify your supervisor of the incident.

Do not acid or caustic wash non-gasketed filter plates unless extra precautions are taken to contain the leakage between plates.

Consult the chemical compatability chart in the safety section of this manual to insure safe and proper operation of the press.

Setup & Requirements

- Storage tank of sufficient capacity to fill the press and allow for recirculation- approximately 1.5 times the holding capacity of the press.
- A low pressure (20-30 psi (1.4-2.1 bar)) pump.

▪Necessary plumbing (hoses or rigid PVC pipe) to isolate the press from the sludge stream and allow for both recirculation to the storage tank and final draining of the spent solution. A throttling valve installed in the return line to the tank may be necessary to insure complete top to bottom press filling and washing of the cloths.

Procedure

1. Clean filter cloths of all external material with a nylon cleaning spatulas.
2. Close the press.
3. Disconnect the center feed line from the sludge pump.
4. Connect the outlet of the acid pump to the center feed line of the press.
5. Connect the filtrate discharge outlet of the press to the recirculation tank.
6. Open the feed line to the press.
7. Start the feed pump. It may take considerable time to fill all the chambers of the press before the solution returns to the storage tank. Continually inspect the press for leakage during filling and circulation.
8. Allow the solution to circulate for one to two hours.
9. Turn off the feed pump.
10. Perform an air blowdown to purge any remaining solution from the press.
11. Disconnect the wash system and reinstall the sludge pump and outlet lines.
12. Normal filtration cycles can now be performed.

The plates can also be "dip washed" by immersing them in a tank of solution. The immersion method is less efficient than through-washing in the press and will require a longer soak time. The plates will also float and require some method to keep them submerged.

HYDRAULIC POWER UNIT MAINTENANCE

Filters

Filters must be maintained. The key to good hydraulic oil filtration is filter maintenance. A machine may be equipped with the best filters available, and the filters may be positioned in the system where they do the most good, but if the filters are not cared for and cleaned when dirty, the money spent for the filters and their installation has been wasted. A filter that gets dirty after one day of service and is cleaned 29 days later gives 29 days of non-filtered fluid. A filter is no better than the maintenance afforded it.

Maintenance Suggestions

1. Set up a filter maintenance schedule and follow it diligently.

2. Inspect filter elements that have been removed from the system for signs of failure. This may indicate that the service interval should be shortened or that the system may have potential problems leading ultimately to failure.

3. Do not reuse any fluid that has been drained or leaked out unless it has been properly filtered and cleaned.

4. Always keep the fresh fluid supply covered tightly.

5. Use clean containers, hoses and funnels when filling the reservoir. Use of a filter cart when adding oil is highly recommended.

6. Use common sense precautions to prevent entry of dirt into components that have been temporarily removed from the circuit.

7. Make sure that all clean-out holes, filler caps and breather cap filters on the reservoir are properly fastened.

8. Do not run the system unless all normally provided filtration devices are in place.

9. Make certain that the fluid used in the system is of a type recommended by the manufacturers of the system or components.

10. Before changing from one type of fluid to another (e.g., from petroleum base oil to a fire resistant fluid), consult component and filter manufacturers in selection of compatible fluids since some oils may cause cylinder and component failure. Also, consult the publication Recommended Practice for the use of Fire Resistant Fluids for Fluid Power Systems published by the National Fluid Power Association.

FOLLOWER

ITEM	FREQUENCY	PROCEDURE
Follower Wheels (4 places)	Quarterly	Add grease until a slight amount of grease squeezes out.
Clevis (3 fittings)	Semi-Annually	Add grease until a slight amount of grease squeezes out.

CYLINDER & BOOT

ITEM	FREQUENCY	PROCEDURE
Cylinder Boot	Weekly	Inspect boot for tears or holes. Repair/replace if damaged. NOTE: It is important that the boot maintain a seal around the cylinder rod since certain processes may cause quick deterioration of the cylinder rod. Repair or replacement of the cylinder would be quite expensive, both in time and cost.

HYDRAULIC POWER UNIT (M-71)

ITEM	FREQUENCY	PROCEDURE
Clamp Pressure	Daily	Check for correct clamp pressure.
Relief Valve	Quarterly	check for proper setting.
Oil level	Weekly	Check for proper level.
Oil Filter	Monthly	Inspect and/or clean.
Oil Filter	Yearly	Replace
Hydraulic Oil	yearly	**Replace:** using type of oil noted in Specifications section of this manual.

PROCESS MANIFOLD

ITEM	FREQUENCY	PROCEDURE
Plumbing	Weekly	Inspect all plumbing connections for leakage.

PLATE SHIFTER SEMI-AUTOMATIC

ITEM	FREQUENCY	PROCEDURE
Lift Cylinder	Weekly	Clean guide rods.
Push Cylinders	Weekly	Clean guide rods.
Lift Cylinder	Monthly	Operate with no plates present. Push plates should lift and lower smoothly. See Troubleshooting section if needed.
Push Cylinder	Monthly	Operate with no plates present. Push plates should extend and retract smoothly. See Troubleshooting section if needed.

1	CUSTOMER SERVICE
2	SPECIFICATIONS
3	SAFETY INSTRUCTIONS
4	INSTALLATION & SETUP
5	GENERAL DESCRIPTION
6	OPERATION
7	PREVENTIVE MAINTENANCE
8	TROUBLESHOOTING
9	DRAWINGS
10	RECOMMENDED SPARE PARTS
11	MANUFACTURERS LITERATURE
12	RETURN POLICY
13	OPTIONAL EQUIPMENT

TABLE OF CONTENTS

TROUBLESHOOTING TABLES
RECESSED CHAMBER PLATES 8.1
FILTRATION CYCLE 8.2
AUTOMATIC PUMP CONTROL SYSTEM 8.3
PLATE SHIFTER SEMI-AUTOMATIC 8.3

RECESSED CHAMBER PLATES- GASKETED

TROUBLE	PROBABLE CAUSE	REMEDY
Plate breakage.	1. Clogged feed ports. 2. Irregular pumping of feed pumps. 3. Short batches with insufficient solids. 4. Solids build up in plate drainage areas reducing flow to outlet. Plugged or partially plugged outlet. 5. High velocity constant pressure/flow pumps such as progressive cavity pumps used for feeding sludge to the press may cause breakage due to velocity shock on one side of the plate. 6. Improper use of back-up plate. 7. Pressure Loading of plates- feed valve is closed when the feed pump is started, or outlet valves are closed when the feed pump is started. 8. Careless handling of plates.	1. Remove excess slurry remaining in feed eyes using a nylon cleaning spatula. 2. Check pump to insure adequate pumping capacity and discharge pressure. Restart pump at a very low pressure and gradually build pressure. 3. Have enough slurry available to complete the filter cycle, or obtain a back-up plate to shorten the cycle. 4. Inspect plate drainage areas behind cloths frequently. Some cloths may allow more solids to pass through than other style cloths (consult JWI). Unplug and clean outlet. 5. Use pumps with a pressure/flow curve corresponding to the filtration curve of the material being filtered. 6. Place back-up plate directly behind tail plate. Do not use tail plate alone to shorten chamber size. 7. Open all valves before starting feed pumps. 8. Handle plates carefully. Do not drop on side bars during installation or cleaning.
Water leaks out between plates.	1. Gaskets loose or torn. 2. Low hydraulic pressure. 3. Wrinkle or hole in filter cloth. 4. Filter cake present in sealing surface.	1. Reinstall or replace. 2. Increase to required pressure. 3. Replace filter cloth. 4. Use nylon cleaning spatula to remove cake from sealing surface.
Filter cloths pull out of grooves during operation.	A full cake was not developed before wash or blowdown, causing cloth to be pushed out of the caulking groove.	Be sure chambers are completely full before wash or blowdown. The filter cake will then support the cloth.
Filter cloths pull out of grooves during operation, even though full cakes are being built.	Improper size sash cord for cloth or application.	Future cloths should be made with a slightly larger sash cord. Contact JWI, Inc. for recommendations.

FILTRATION CYCLE

TROUBLE	PROBABLE CAUSE	REMEDY
Solids in Filtrate	1. Holes in filter cloths. 2. Filter cloth in head plate improperly installed. 3. Filter cloth sash cord out of groove in gasketed plates. 4. Incorrect filter cloth for application. 5. Change in feed characteristics.	1. Replace filter cloths. Be careful when scraping cake- sharp edges may tear cloth. 2. Replace. 3. Clean groove and drainage surface behind cloth and reinstall. 4. Consult JWI. Submit sample for testing. 5. Consult JWI. Submit sample for testing.
No filter cake formed (very little flow)	1. Material not amenable to pressure filtration. 2. Filter cloths blinded from polymer,oils,fine particulate,too high initial flow 3. Feed pump, feed line, or suction line plugged.	1. Consult JWI. Submit sample for testing. 2. Clean or replace filter cloths. 3. Clean as needed.
Partial filter cake formed (firm on edges, liquid in center)	1. Material not amenable to pressure filtration. 2. Too low air pressure to feed pump (if air driven) 3. Pump located below or too far away from filter press. 4. Filter cloths partially blinded from -polymers,oils,fine particulates. 5. Ran out of feed material. 6. Premature termination of cycle. 7. Bodyfeed dosage too low, or inadquate pretreatment.	1. Consult JWI. Submit sample for testing. 2. Increase air pressure to maximum rating of filter press (last stage). 3. Relocate pump next to filter press. 4. Clean or replace filter cloths. 5. Wait until more feed material is available or obtain backup plate. 6. Allow longer time period between pump strokes at high pressure. 7. Increase bodyfeed dosage or re-evaluate treatment.
Uneven filter cake formation.	1. Clogged feed eye. 2. Plugged drainage surfaces or drain ports. 3. Filter cloths partially blinded. 4. Flow rate too low. 5. Stopped feed pump during cycle and then restarted (filter cake slumps blocking feed eye).	1. Clean at end of every cycle. 2. Remove cloth and clean. 3. Clean or replace filter cloths. 4. Increase air pressure or pump size. 5. Restart pump at low pressure and gradually build pressure.
Cycle time too long.	1. Too low of solids in feed slurry. 2. Dewatering characteristics of feed material. 3. Filter cloths partially blinded. 4. Feed pump undersized- Too low of flow rate. 5. Too low or air pressure to feed pump (if air drive) 6. Filter press oversized.	1. concentrate/thicken solids in feed material. 2. Add filter aid or evaluate treatment alternatives. 3. Clean or replace filter cloths. 4. Replace with larger pump. 5. Increase air pressure to maximum rating of filte press. 6. Wait until more feed material is available before running cycle, or obtain backup plate.

AUTOMATIC PUMP CONTROL SYSTEM

TROUBLE	PROBABLE CAUSE	REMEDY
Pressing the "Start" button will not start a cycle.	1. Insufficient air supply to system. 2. Hydraulic pump not turned on. 3. Air supply switch not turned on.	1. Insure 100 psi (6.8 bar) system pressure. 2. 3. Follow press closing procedure for proper operation.
Pump stops in mid cycle- "Low Hydraulic Pressure" light illuminated.	1. Air supply pressure dropped and clamping force lost. 2. Press closure switches in wrong position.	1. Insure 100 psi (6.8 bar) system pressure. 2. "Air Supply" switch must be "On", "Hydraulic Pump" switch must be "On".

PLATE SHIFTER SEMI-AUTOMATIC
(reference drawing 10238900)

TROUBLE	PROBABLE CAUSE	REMEDY
Only one lift cylinder operates.	1. Lack of air to cylinder. 2. Jammed lift cylinder or push cylinder on slow side. 3. Exhaust line from top of slow lift cylinder plugged or not exhausting. 4. Speed control No. 15, 16 to lift cylinder plugged.	1. Insure air supply of 60 psi. 2. Clear obstruction. 3. Clean or replace. 4. Clean or replace.
Lift cylinders to not operate together.	1. One push cylinder binding or rubbing side of shifter housing excessively. 2. Air restriction to slow lift cylinder. 3. Sticky lift cylinder. 4. Exhaust restriction on slow cylinder.	1. Adjust as needed. 2. Clear lines & ports. 3. Replace/repair cylinder. 4. Clean/replace exhaust muffler.
With both lift cylinders up, the push cylinders do not operate.	1. Adjustment of one or both limit switches (No. 14) resulting in no air to pilot control of push cylinder valve #12 or #13. 2. Speed controls on push cylinders closed down too far. 3. Exhaust from cylinder plugged. 4. Valve No. 12 & 13 not operating properly.	1.Adjust limit switch. 2. Open speed control. 3. Clean/replace exhaust muffler. 4. Replace/repair valve.
Lift cylinders drop too fast when push button is released.	Speed control on bottom of No. 15 & 16 not set properly.	Open 1/2 turn.
Lift cylinders bang in the up motion.	Speed control on top of No. 15 & 16 not set properly.	Open 1/4 turn.
Only one lift cylinder drops when push button is released.	1. Speed control to slow cylinder closed too far on bottom. 2. No air to slow cylinder. 3. Sticky lift cylinder or push cylinder rubbing.	1. Open speed control. 2. Insure air supply of 60 psi. 3. Adjust as needed.

Push cylinders do not operate together.	1. One cylinder sticky. 2. Speed control not adjusted properly. 3. Guide rod bent, dirty, or needs lubrication.	1. Replace/repair cylinder. 2. Open both speed controls on cyinders No. 10 & 11, activate push cylinders out noting fastest one. Close speed control on fast cylinder until it equals slow cylinder extension. 3. Replace/repair cylinder.
Only one push cylinder returns.	1. Guide rod bent, dirty, or needs lubrication. 2. Lack of air to front of slow cylinder. 3. Exhaust of slow cylinder plugged. 4. Speed control plugged.	1. Repair as needed. 2. Adjust flow. 3. Clean as needed. 4. Clean as needed.
Lift cylinders do not return when push button is released.	1. Lift speed control on top of No. 15 & 16 closed down too far. 2. Lift speed control on bottom of No. 15 & 16 plugged or closed down too far. 3. Lift valve No. 17 inoperative.	1. Open control. 2. Open control. 3. Repair/replace valve.
Push plates do not align between plate handles.	1. Mechanism out of alignment. 2. Bent shifter rails.	1. Adjust "V" rollers from inside shifter cabinet for proper alignment. 2. Repair/replace rails.
Plates do not separate, or do not push all the way across opening.	Insufficient air supply pressure.	Raise pressure- insure 40-60 psi air supply pressure.
Plate handles bending.	Too high air supply pressure.	Lower pressure- insure 40-60 psi air supply pressure.

1	CUSTOMER SERVICE
2	SPECIFICATIONS
3	SAFETY INSTRUCTIONS
4	INSTALLATION & SETUP
5	GENERAL DESCRIPTION
6	OPERATION
7	PREVENTIVE MAINTENANCE
8	TROUBLESHOOTING
9	DRAWINGS
10	RECOMMENDED SPARE PARTS
11	MANUFACTURERS LITERATURE
12	RETURN POLICY
13	OPTIONAL EQUIPMENT

PLATES TO BE CENTER FEED 4 CORNER DISCHARGE. PLATES OF POLYPROPYLENE GASKETED CONSTRUCTION WITH 0.63[16MM] RECESSES FOR 1.26[32MM] THICK CAKES.

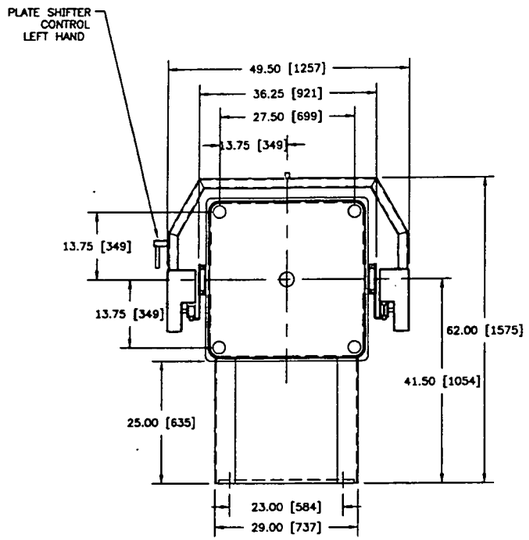

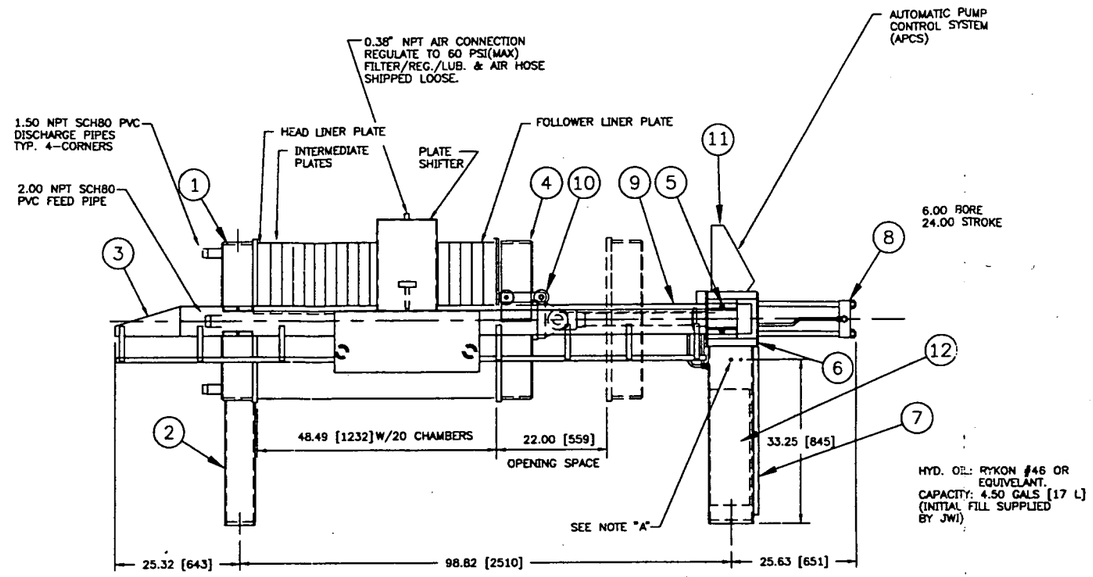

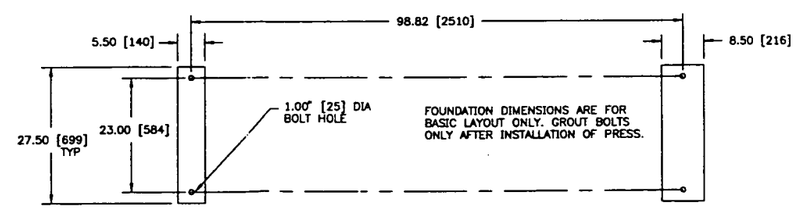

FOUNDATION LAYOUT

ITEM NO.	QUAN.	DESCRIPTION
12	1	HYDRAULIC PUMPING UNIT
11	1	CONTROL CENTER
10	3	FOLLOWER ROLLER
9	2	STAINLESS STEEL SIDEBAR CAP
8	1	CYLINDER
7	1	CYLINDER BRACKET LEG
6	1	CYLINDER BRACKET
5	4	JOGGLE PLATE
4	1	FOLLOWER
3	2	SIDEBAR
2	1	HEAD LEG
1	1	HEAD

NOTE "A":
- AIR INLET 0.375 NPT
- MIN AIR PRES. - 85 PSI
- MAX AIR PRES. - 120 PSI

CONNECTION SHOULD BE CLEAN AIR, FREE FROM WATER & OIL. PRESENCE OF SUCH CAN CAUSE SEVERE DAMAGE TO HYDRAULIC COMPONENTS.

DIM'S IN [XXXX] ARE IN MILLIMETRES UNLESS OTHERWISE NOTED.

JWI MODEL NO : 800G32-20-10SYLS
JWI SERIAL NO : 5215
CUSTOMER : H.E. SARGENT INC. / BRUNSWICK NAVAL AIR STATION
PRESS CAPACITY : 10 CU.FT. [.283 CU.M.]
FILTRATION AREA : 215.8 SQ.FT. [20.05 SQ.M.]

HEAD LEG WEIGHT - 2,400 LBS [1088 KG]
CYL LEG WEIGHT - 1,600 LBS [725 KG]
PRESS SHIPPING WEIGHT - 4,000 LBS [1814 KG]

CHG. BY	SYM.	DESCRIPTION	E.C.N.	DATE

J-PRESS 800mm

SCALE 1/20	DRAWN VVH	CH'K	SHT. 1 OF 1
DATE 11-10-94	TITLE 800mm FILTER PRESS		
SUPERSEDES			
SUPS'D BY	C	DWG. NO. F0521501	

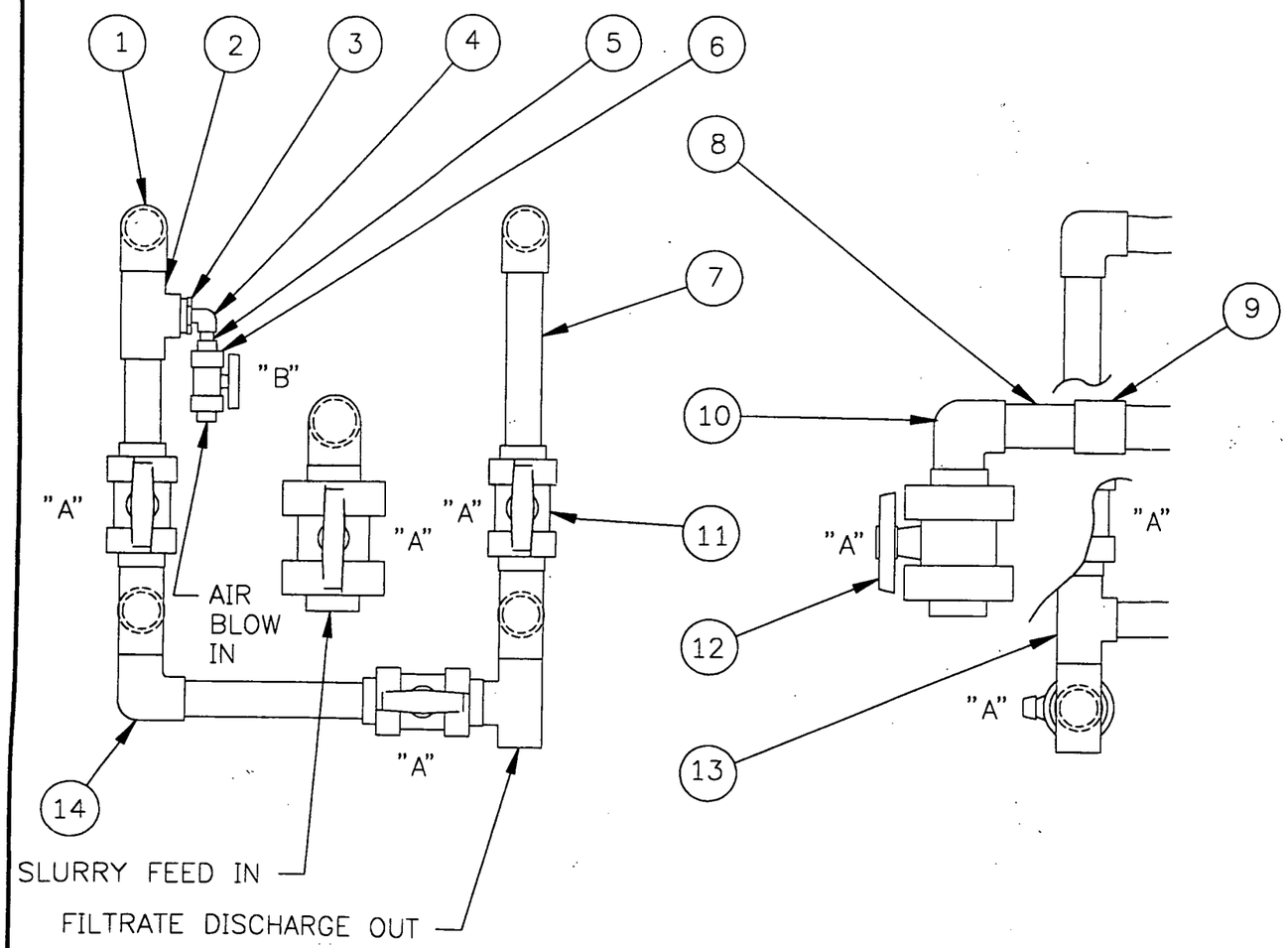

NOTE: THREAD TAPE TO BE USED ON ALL THREADED FITTINGS
B ALL SLIP JOINTS TO BE CEMENTED TOGETHER WITH PVC CEMENT ONLY
**ITEM NO. 15 TO BE SHIPPED WITH THE MANIFOLD (NOT INSTALLED BY JWI)

	ITEM	QTY.	PART NO.	DESCRIPTION/MAT'L
**	15	1	10185400	REGULATOR 1/2" NPT (NOT SHOWN)
	14	1	10026301	1.50 SCH80 ELBOW SxS / PVC
	13	2	10026200	1.50 SCH80 TEE SxSxT / PVC
	12	1	10027001	2.00 BALL VALVE SxS / PVC
	11	3	10027000	1.50 BALL VALVE SxS / PVC
	10	1	10026302	2.00 SCH80 ELBOW SxS 90° / PVC
	9	1	10027500	2.00 SCH80 FEM. ADPT. SxT / PVC
	8	8"	10026907	2.00 SCH80 PIPE / PVC
	7	6'	10026906	1.50 SCH80 PIPE / PVC
A	6	1	10027008	0.50 BALL VALVE TxT / PVC
	5	2	10026800	0.50 NIPPLE SCH80 CLOSE / PVC
	4	1	10026316	0.50 ELBOW SCH80 TxT 90° / PVC
	3	1	10026600	BUSHING 1.50 x 0.50 SxT / PVC
	2	2	10026201	1.50 SCH80 TEE SxSxS / PVC
	1	2	10026300	1.50 SCH80 ELBOW SxT 90° / PVC

B

B

"A" VALVES– OPEN DURING FEED,
CLOSED DURING AIR BLOWDOWN.

"B" VALVES– CLOSED DURING FEED,
OPEN DURING AIR BLOWDOWN.

UNLESS OTHERWISE NOTED TOLERANCES TO BE:

FABRICATION	MACHINE
.00 ± .08	.00 ± .03
< ± 2°	.000 ± .005
	< ± 1°

DO NOT SCALE

CHG. BY	SYM.	DESCRIPTION	E.C.N.	DATE
JDH	C	ADD VALVE DIRECTIONS	1101	7-DEC-90
JDH	B	CORRECT B.O.M SEE RECORD	1101	7-DEC-90
JDH	A	CORRECT PART NUMBER	895	02-14-90

J-PRESS 800mm

SCALE

DATE 12-19-89

SUPERSEDES

SUPS'D BY

JWI

DRAWN JDH | CH'K | SHT. OF

TITLE AIR BLOW DOWN MANIFOLD W/ SHIFTER & REGULATOR

DWG. NO. 10027313

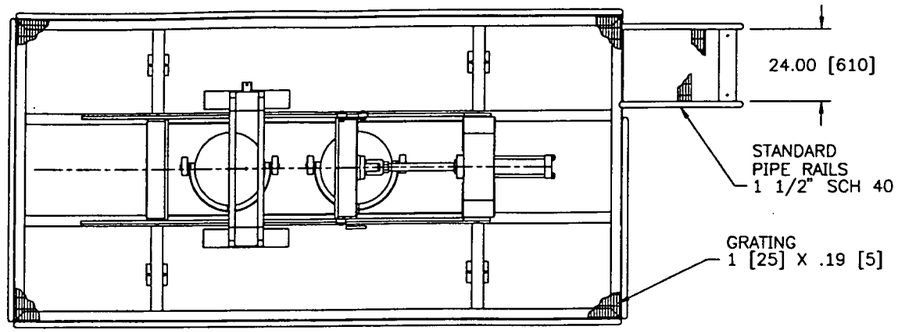

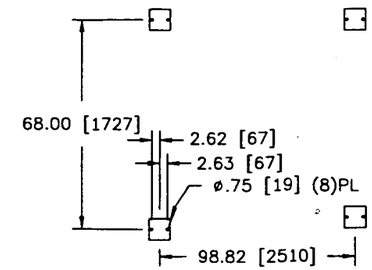

FOUNDATION LAYOUT

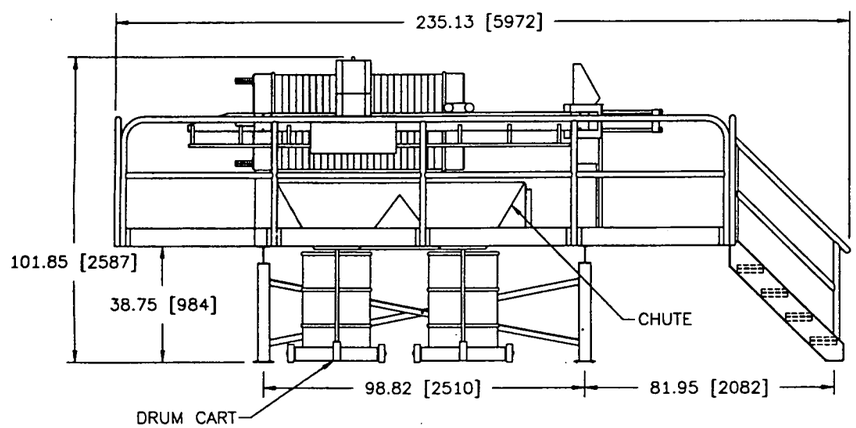

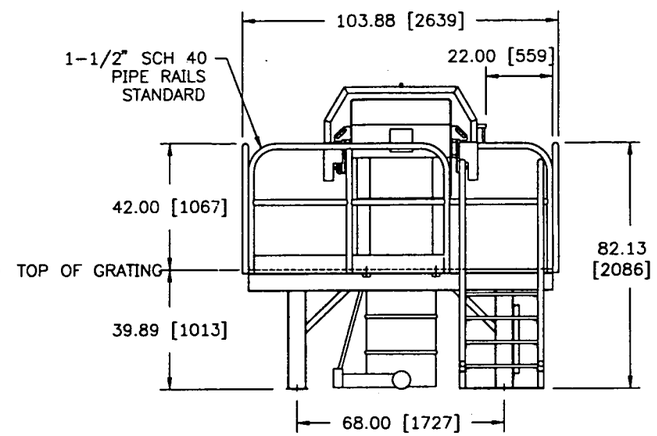

UNLESS OTHERWISE NOTED
TOLERANCES TO BE:

FABRICATION	MACHINE
.XX ± .06	.XX ± .03
[X ± 2]	.XXX ± .005
< ± 2°	[X ± 1]
	[.X ± .1]
	< ± 1°

DIMENSIONS IN [ ] ARE MILLIMETERS
DO NOT SCALE DRAWING

ITEM	QTY.	PART NO.	DESCRIPTION/MAT'L	RAW STOCK NO.	RAW STOCK QTY.

CHG. BY	SYM.	DESCRIPTION	E.C.N.	DATE

PRESS 800mm

JWI® INC.
2155 112TH AVENUE
HOLLAND, MI 49424
U.S.A.

SCALE	DRAWN	CH'K	SHT.	OF
1/50	VVH		1	1

DATE 11-10-94

SUPERSEDES

SUPS'D BY

TITLE
DRUM DISPOSAL 800mm

B

DWG. NO.
F0521502

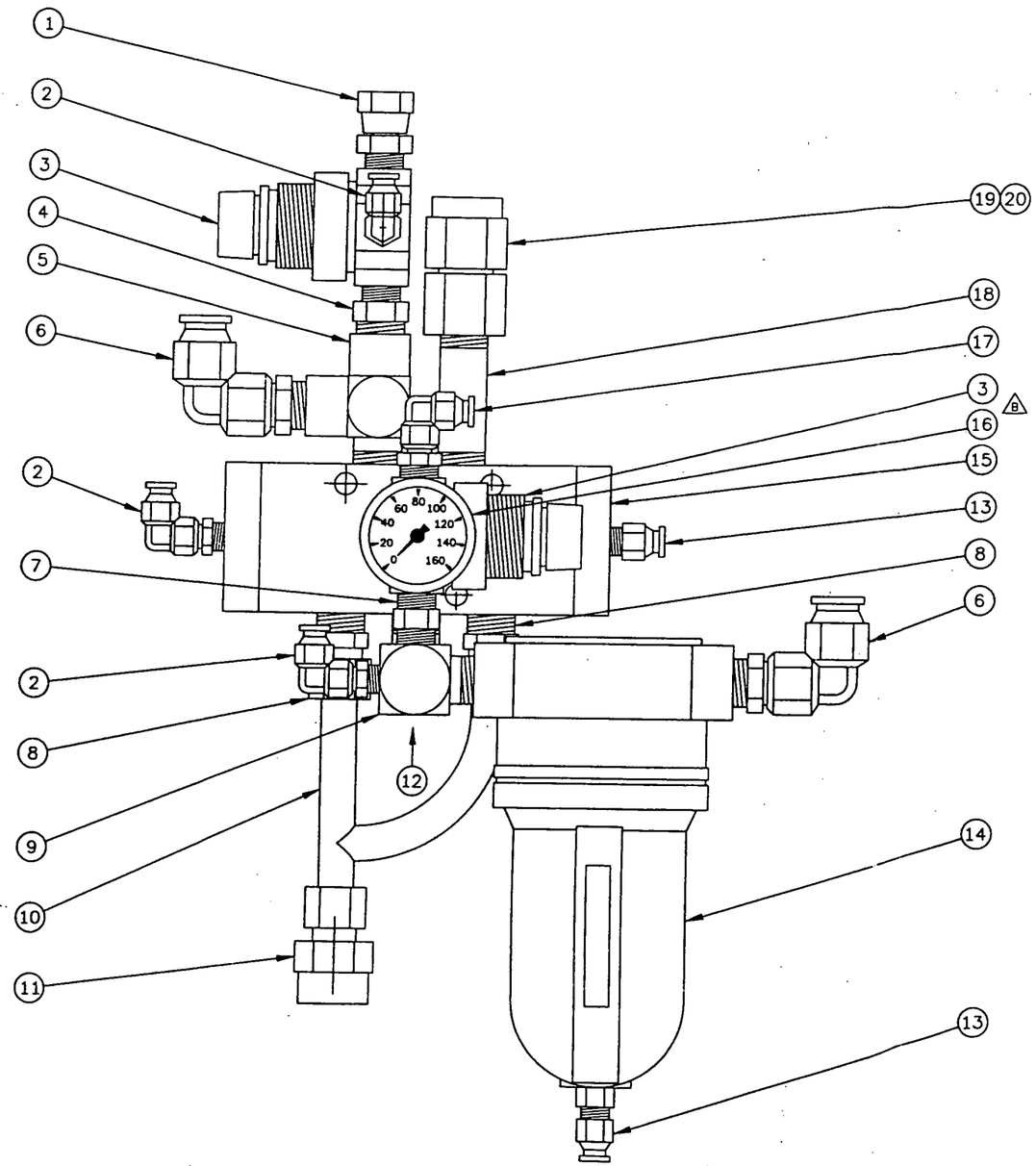

	ITEM	QTY.	PART NO.	DESCRIPTION/MAT'L	RAW STOCK NO.	RAW STOCK QTY.
	20	1	10018801	TUBE SLEEVE S.S.	–	–
	19	1	10330502	FEMALE CONNECTOR	–	–
	18	1	10414807	PIPE NIPPLE	–	–
	17	1	10019601	MALE ELBOW SWIVEL 90°	–	–
B	16	1	10936602	GUAGE	–	–
	15	1	10042400	SPOOL VALVE	–	–
C	14	1	10936401	FILTER – AIR	–	–
	13	2	10019401	MALE CONNECTOR	–	–
	12	1	10018301	MALE PIPE ELBOW	–	–
	11	1	10024500	FEMALE CONNECTOR–BRASS	–	–
	10	1	10042000	Y–TUBE EXHAUST BRACKET	–	–
	9	1	10042200	STREET ELBOW PORTED 1/8&1/4 NPT	–	–
	8	2	10159900	FEMALE CONNECTOR – BRASS	–	–
	7	1	10018101	PIPE NIPPLE	–	–
	6	2	10019600	MALE ELBOW SWIVEL 90°	–	–
	5	1	10354800	STREET TEE	–	–
	4	1	10018001	REDUCING PIPE NIPPLE	–	–
B	3	2	10936601	REGULATOR	–	–
	2	3	10019602	MALE ELBOW SWIVEL 90°	–	–
	1	1	10020900	MALE PIPE ADAPTER	–	–

UNLESS OTHERWISE NOTED TOLERANCES TO BE:

FABRICATION	MACHINE
.00 ± .06	.00 ± .03
< ± 1°	.000 ± .005
	< ± 1°

DO NOT SCALE

CHG. BY	SYM.	DESCRIPTION	E.C.N.	DATE
JDH	C	CORRECT PART NUMBER	1112	22–JAN–91
JDH	B	CORRECT REGULATOR/GUAGE PART NO.S	1106	13–DEC–90
DLM	A	REDRAWN ON CAD WITH BOM UPDATE	982	06–05–90

PRESS 630 800 1000

SCALE 3/4

DATE 04–17–90

SUPERSEDES

SUPS'D BY

DRAWN DLM

CH'K

SHT. 1 OF 1

TITLE AIR MODULE

C

DWG. NO. 10017200

1	CUSTOMER SERVICE
2	SPECIFICATIONS
3	SAFETY INSTRUCTIONS
4	INSTALLATION & SETUP
5	GENERAL DESCRIPTION
6	OPERATION
7	PREVENTIVE MAINTENANCE
8	TROUBLESHOOTING
9	DRAWINGS
10	RECOMMENDED SPARE PARTS
11	MANUFACTURERS LITERATURE
12	RETURN POLICY
13	OPTIONAL EQUIPMENT

SPARE PARTS

JWI includes the following list of spare parts, and recommends that the end-user review this list and decide what spare parts to stock for his operation. Some items are wear items and will deteriorate at different rates depending upon specific processes. Other parts, although unlikely to fail, are recommended because failure will cause part or all of the system to be down. Some items might have a long lead time, or might be costly to stock. The end user must decide what parts of the system are critical to his operation (example: one user might require drip trays to be functional for every cycle, another might only need it for washing and could work without the drip trays until a part could be ordered). JWI recommends that the end user work closely with the JWI spare parts department to determine the most cost-effective parts to have on hand.

Series 2H

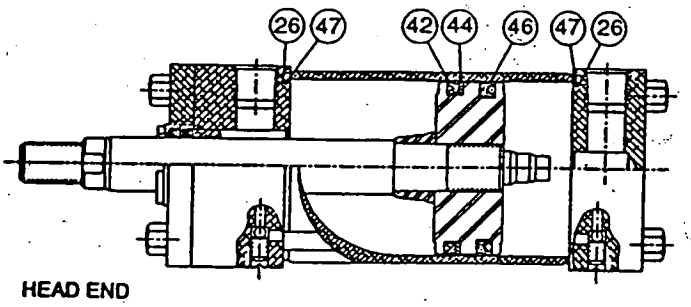

Series 3H

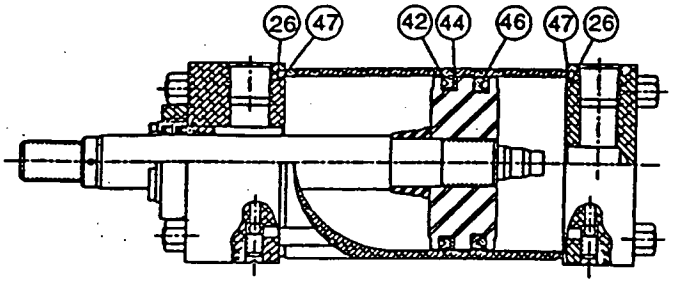

NOTE: Cylinder body seal backup washers, symbol 26, are no longer required on all bore size cylinders.

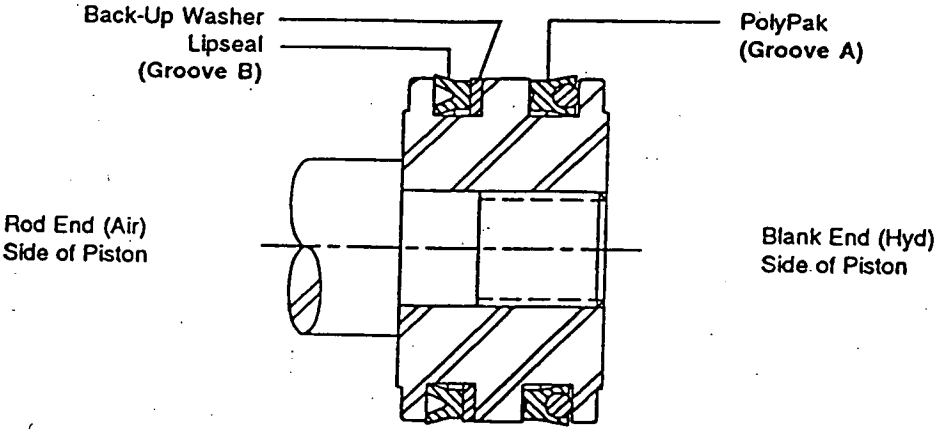

Table A -	JWI PISTON SEAL KITS		
CYLINDER SERIES	BORE SIZE	JWI PART NUMBER	TIE ROD TORQUE (FT. LBS.)
2H	4"	10333616	130
2H	6"	10333605	525
3H	8"	10333602	1168
3H	10"	10333628	700
3H	12"	10333629	1320
3H	14"	10333630	1000
3H	16"	10333632	2100

TABLE B	
Retainer Bolt Torque	
Bolt Dia.	Torque
1/4"	60 in.-lbs.
5/16"	10 ft.-lbs.
3/8"	20 ft.-lbs.
7/16"	35 ft.-lbs.
1/2-13	55 ft.-lbs.
5/8-11	90 ft.-lbs.
3/4-10	180 ft.-lbs

Parker Series 3H Large Bore High Pressure Hydraulic Cylinders

'arts Identification

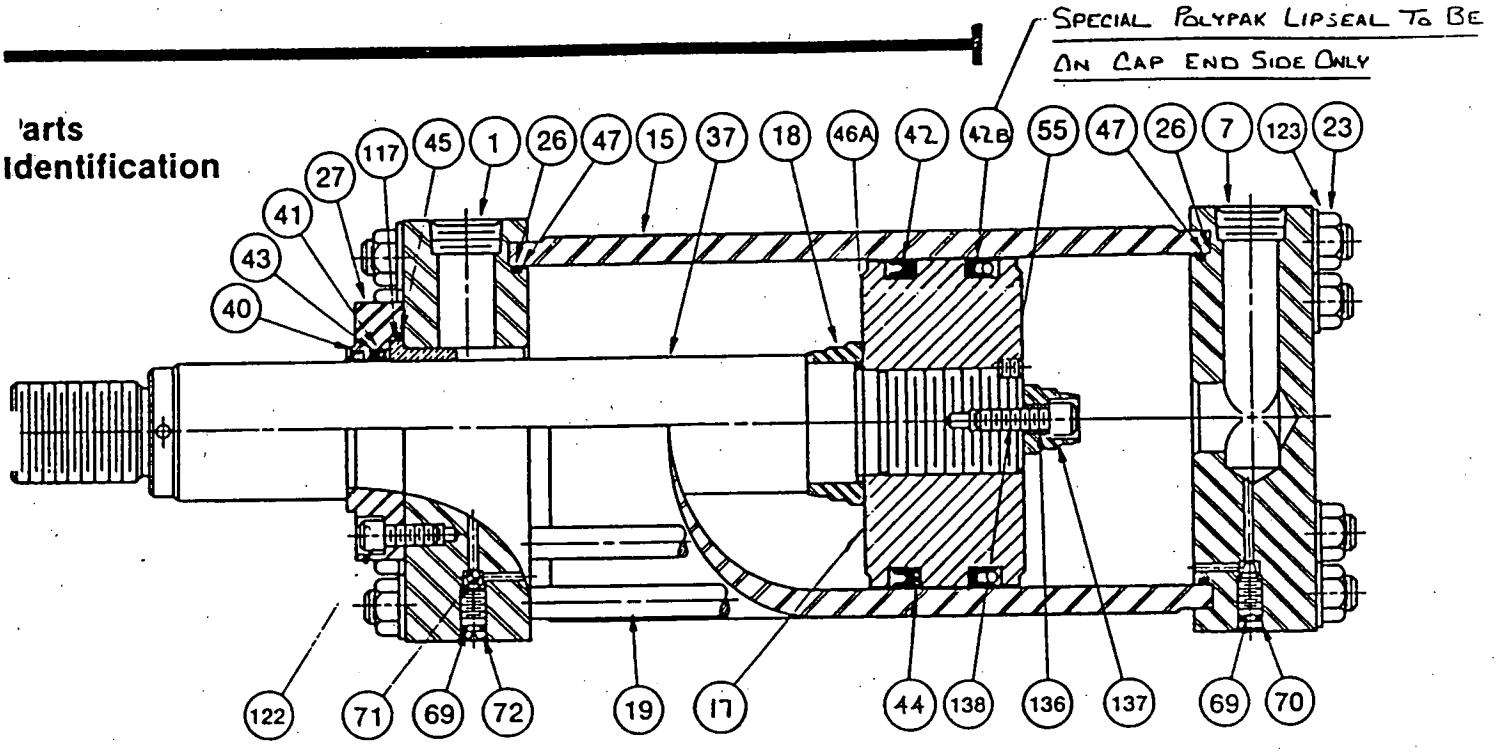

SYM NO.	
1	HEAD
7	CAP
15	CYLINDER BODY
17	PISTON BODY - Lipseal
18	CUSHION SLEEVE
19	TIE ROD
23	TIE ROD NUT - Non-Locking
26	BACK-UP WASHER, Cylinder Body
27	RETAINER
37	PISTON ROD
40	WIPERSEAL
41	ROD SEAL (Polypak)
42	LIPSEAL, Piston
42b	LIPSEAL (Polypak)
43	BACK-UP WASHER, Polypak

SYM NO.	
44	BACK-UP WASHER, Lipseal
45	O-RING, Gland to Head
46a	CUSHION SEALING RING
47	O-RING Cylinder Body
55	PISTON LOCK PIN
69	O-RING, Cushion Adj. & Chk Screws
70	CUSHION ADJG NEEDLE SCREW
71	CHECK VALVE BALL
72	CHECK VALVE SCREW
117	ROD BEARING
122	RETAINER BOLT
123	WASHER, TIE ROD NUT
136	SPACER, Cushion
137	CUSHION SPEAR, Detachable
138	BOLT, Cushion Spear

Parker Series 2H, Cylinders

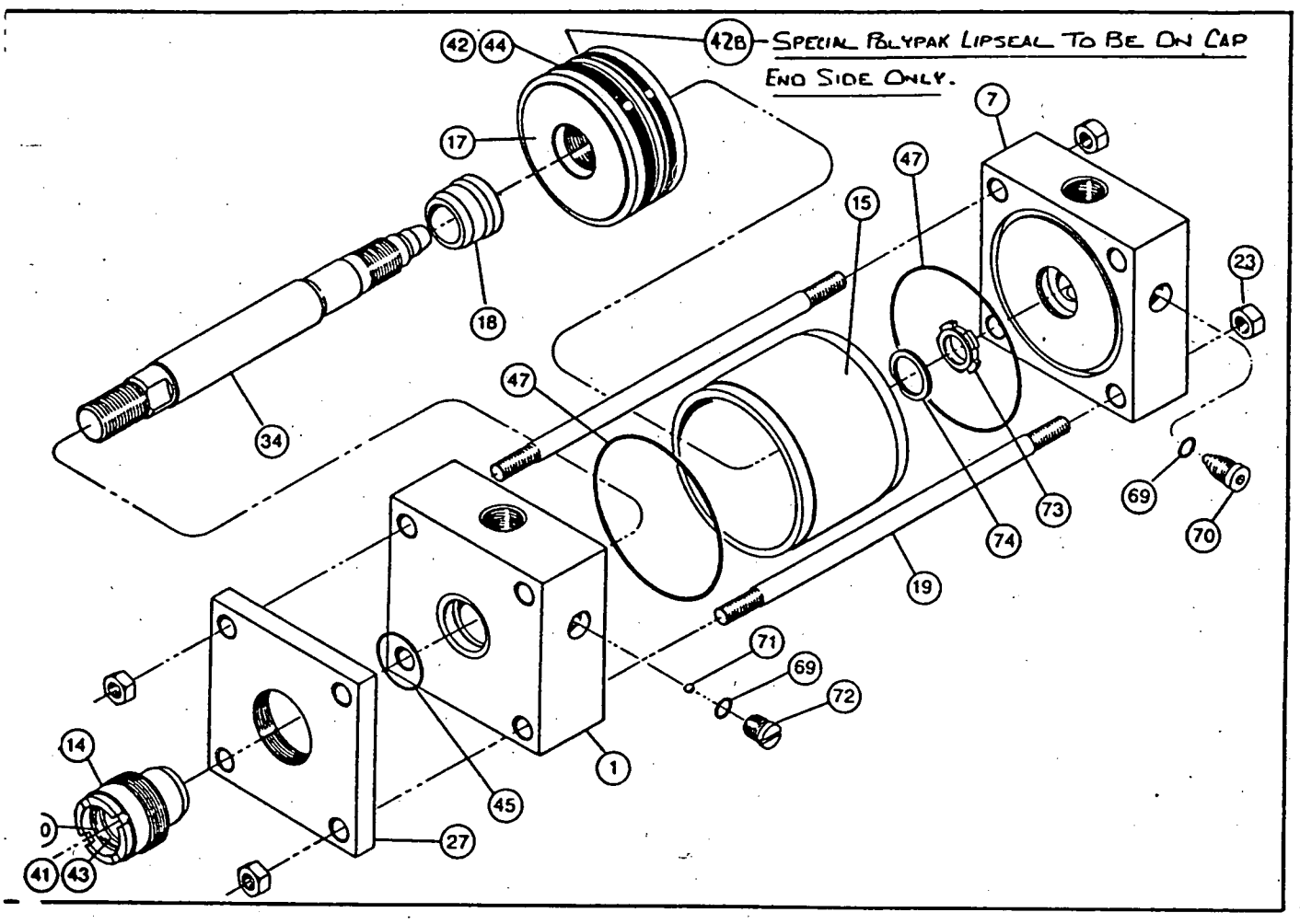

SYM NO.	
1	HEAD
7	CAP
14	GLAND
15	CYLINDER BODY
17	PISTON BODY - Lipseal
18	CUSHION SLEEVE
19	TIE ROD
23	TIE ROD NUT - Non-Locking
26	BACK-UP WASHER, Cylinder Body
27	RETAINER
34	PISTON ROD
40	WIPERSEAL, Gland
41	LIPSEAL, Gland

SYM NO.	
42	LIPSEAL, Piston
42b	LIPSEAL (Polypak)
43	BACK-UP WASHER, Polypak
44	BACK-UP WASHER, Lipseal
45	O-RING, Gland to Head
46a	CUSHION SEALING RING
47	O-RING Cylinder Body
69	O-RING, Cushion Adj. & Chk Screws
70	CUSHION ADJG NEEDLE SCREW
71	CHECK VALVE BALL
72	CHECK VALVE SCREW
73	CUSHION BUSHING, Cap end
74	RET. RING, Cushion Bushing

JWI 2155 112th Avenue, Holland, Michigan 49424-9604 U.S.A. • Telephone (616) 772-9011 • Fax (616) 772-4516

J-PRESS SPARE PARTS PRICE LIST

800 mm, 100 psi, Sidebar Design

Part Number	Item Description	Unit Price
Filter Pack		
*	Filter Cloth, Intermediate	$ 48.00
*	Filter Cloth, End	$ 24.00
*	Filter Plate, Gasketed, With Cloth	$ 875.00
*	Filter Plate, Non-Gasketed, With Cloth	$ 735.00
10370704	Backup Plate	$ 575.00
*	Gasket Material (100 Foot Roll, Price Per Foot)	$ 1.00
10065401	Spatula, Plate Cleaning, 40" Long	$ 37.00
Hydraulic System		
10017111	Hydraulic Module, Tested & Set	$ 1,200.00
10042600	Pump, Hydraulic, M-71	$ 710.00
10337901	Seal Kit, M-71 Hydraulic Pump	$ 130.00
10021000	Filter, Hydraulic Oil	$ 73.00
10021002	Element, Filter, Hydraulic Oil	$ 29.00
10057600	Valve, Hydraulic Pressure Relief	$ 110.00
10042701	Valve, Hydraulic Pressure Release	$ 430.00
10029810	Cylinder, Hydraulic Closing, 6" Bore X 24" Stroke	$ 2,250.00
10333605	Seal Kit, Cylinder - Piston & Cylinder	$ 395.00
10333603	Seal Kit, Cylinder - Rod Gland	$ 345.00
10137601	Bellows, Closing Cylinder	$ 74.00
10023804	Gauge, Hydraulic, 0-6,000 psi	$ 58.00
Air System		
10017200	Air Module	$ 830.00
10936401	Air Filter	$ 126.00
10936404	Air Filter Element (Parker Brand Filter)	$ 17.00
10042517	Air Filter Element (Norgren Brand Filter)	$ 17.00
10057100	Exhaust Silencer	$ 110.00
10057102	Element, Exhaust Silencer	$ 37.00
10042400	Valve, Spool	$ 147.00
10936601	Regulator, 0-125 psi	$ 44.00
10936602	Gauge, Air, 0-160 psi (Regulator)	$ 20.00
10023600	Gauge, Air, 0-160 psi (Control Panel)	$ 58.00
Skeleton		
10056100	Roller, Follower, Delrin	$ 47.00
10056100	Roller, Expansion Piece, Delrin	$ 47.00
Manifold and Piping		
10527200	Centerfeed Assembly, 2" Diameter X 12" Length, PVC	$ 255.00
10000300	Liner Pipes, 1 1/2" X 12", PVC	$ 50.00
10001002	Lock Nut, 1 1/2", PVC	$ 25.00
10027000	Ball Valve, 1 1/2", PVC	$ 90.00
10027008	Ball Valve, 1/2", PVC	$ 35.00
10027001	Ball Valve, 2", PVC	$ 105.00
10936201	Regulator, Air, 1/2" npt, 0-60 psi, with Gauge	$ 79.00

* Note: Consult factory with J-Press serial number for specific part number.

Prices subject to change.

JWI.
JWI 2155 112th Avenue, Holland, Michigan 49424-9604 U.S.A. • Telephone (616) 772-9011 • Fax (616) 772-4516

AUTOMATIC PUMP CONTROL SYSTEM

Cabinet Assembly - Drawing #11386303

Item	Part Number	Item Description	Unit Price
	*	APCS Cabinet Assembly Complete	$ 3,600.00
1	*	ENCLOSURE APCS CYL MNT PAINTED	$ 485.00
2	10568400	OVERLAY APCS	$ 27.00
3	10067300	MOUNTING PLATE APCS	$ 48.00
4	10066600	PLEXIGLAS 0.125 x 3.00 x 9.50 LEXAN	$ 30.00
5	10023600	GAUGE 0-160 PSI W/CLAMP	$ 58.00
6	10023804	GAUGE 0-6000 PSI	$ 58.00
7	10041900	VALVE, CONTROL ASSEMBLY - HUMPHREY 31P	$ 95.00
8	10041800	VALVE, CONTROL ASSEMBLY - HUMPHREY 41P	$ 99.00
9	10023000	TIMER ATC	$ 110.00
10	10593500	TIMER MOUNT FRAME 57031250100	$ 7.00
11	10022100	SWITCH 2-POSITION MAINTAINED 1 NO	$ 56.00
12	10022200	SWITCH PUSH BUTTON GREEN	$ 79.00
13	10022301	LIGHT PILOT BASE (NO LENS)	$ 90.00
14	10241303	LENS CAP GREEN	$ 7.25
15	10241304	LENS CAP AMBER	$ 7.25
16	10241302	LENS CAP RED	$ 7.25
17,18,19	10140600	TRACK PHOENIX #0801733 (36" x 35mm)	$ 0.50
20	10023300	VALVE SOLENOID HUMPHREY	$ 82.00
21	10024701	REGULATOR AIR 0.12 0-125PSI PARKER	$ 28.00
22	10020100	NIPPLE 0.12NPT x CLOSE BRASS	$ 0.50
23	10020002	ELBOW 90 0.12MNPT x 0.12NPT BRASS	$ 2.20
24	10023500	VALVE SHUTTLE 18SV	$ 14.00
25	10020300	COUPLING 0.12FNPT x 0.12FNPT BRASS	$ 0.74
26	10019401	CONNECTOR 0.12MNPT x 0.25 TUBE PRESTOLOK	$ 2.55
27	10019900	TEE 0.25T PTL x 0.12MNPT x 0.25T PTL	$ 5.70
28	10019602	ELBOW 90 SWL 0.12MNPT x 0.25 T PRESTOLOK	$ 3.35
29	10023902	TUBING ALKON POLY 0.25 AP44R RED	$ 0.15
30	10022000	SOCKET CONNECTING	$ 9.00
31	10936101	TIMER ATC 339A 359 Q 2 X-3 HOUR	$ 135.00
32	10798703	LABEL "TIMER 1" B/W	$ 0.45
33	10798704	LABEL "TIMER 2" B/W	$ 0.45
34	10798705	LABEL "TIMER 3" B/W	$ 0.45
35	10798706	LABEL "TIMER 4" B/W	$ 0.45
36	10798707	LABEL "GRND" B/W	$ 0.45
37	10798708	LABEL "LINE 2" B/W	$ 0.45

*** Note: Consult Factory with J-Press serial number for specific part number.**

Prices subject to change.

JWI 2155 112th Avenue, Holland, Michigan 49424-9604 U.S.A. • Telephone (616) 772-9011 • Fax (616) 772-4516

AUTOMATIC PUMP CONTROL SYSTEM

Cabinet Assembly - Drawing #11386303

Item	Part Number	Description	Unit Price
38	10798709	LABEL "LOW HYD" B/W	$ 0.45
39	10798710	LABEL "SYS ON" B/W	$ 0.45
40	10978711	LABEL "SYS FULL" B/W	$ 0.45
41	10798401	LABEL "RELAY 1" B/W	$ 0.45
42	10798402	LABEL "RELAY 2" B/W	$ 0.45
43	10022600	FUSE BLOCK H&K 1P 250V 30A PANEL	$ 6.00
44	10024400	FUSE 250V FRN 1.00A M	$ 7.75
45	10022701	BLOCK TERMINAL DBL ROW	$ 11.50
46	10609100	SWITCH PRESSURE 10-100 PSI PB16A-RF10A11	$ 160.00
47	10019601	ELBOW 90 SWL 0.25MNPT x 0.25 T PRESTOLOK	$ 4.50
48	10022007	SOCKET CONNECTING FOR LY-2	$ 8.00
49	10023202	RELAY OMRON LY2-AC120	$ 16.00
50	10022008	SOCKET CONNECTING FOR LY-3	$ 9.00
51	10023203	RELAY OMRON LY3-US-AC120	$ 17.00
52	10022006	CLIP RELAY HOLD DOWN PYC-A1	$ 0.75
53	10020600	ELBOW 90 SWIVEL 0.25FNPT x 0.25FNPT	$ 4.25
54	10019501	TEE 0.25 TUBE PRESTOLOK	$ 6.00
55	10023900	TUBING ALKON POLY 0.25 AP44N CLEAR	$ 0.15
56	10019200	CONNECTOR 0.25FNPT x 0.25 TUBE PRESTOLOK	$ 6.50
57	10020000	ELBOW 90 0.25MNPT x 0.25FNPT BRASS	$ 1.50
	10315200	SCREW SELF DRL PHLP 0.1900-24x 0.75 ZCPL	$ 0.15
	10315201	SCREW SELF DRL PHLP 0.1900-24x 0.50 ZCPL	$ 0.15
	10066800	SCREW PAN HD SLOT 0.1640-32x 0.25 ZCPL	$ 0.11
	10038800	NUT HEX FULL 0.2500-20 18-8SS	$ 0.05
	10038300	WASHER FLAT 0.2500 18-8SS	$ 0.05
	10142900	WIRE COPPER MTW #18 WHITE	$ 0.07
	10142901	WIRE COPPER MTW #18 RED	$ 0.07
	10262802	TERMINAL FLAT FORK RB14-10F BLUE	$ 0.80
	10262800	TERMINAL FLAT FORK RC10-10F	$ 0.90
	10343505	TERMINAL FEMALE DISC 14RBD-182 STA-KON	$ 0.85
	10185928	APCS INSTALLATION KIT	$ 280.00
	10025701	AIR PILOT REGULATOR 3/4" NPT	$ 208.00
	10025702	AIR PILOT REGULATOR 1" NPT	$ 288.00
	11344201	LOW PRESSURE HYDRAULIC PRESSURE SWITCH	$ 115.00
	10450701	TUBING KIT FOR REGULATOR 1/4"	$ 25.00

*** Note: Consult Factory with J-Press serial number for specific part number.**

Prices subject to change.

JWI 2155 112th Avenue, Holland, Michigan 49424-9604 U.S.A. • Telephone (616) 772-9011 • Fax (616) 772-4516

J-PRESS SPARE PARTS PRICE LIST

Semi-Automatic Plate Shifters, Sidebar Design

Part Number	Item Description	Unit Price
630 mm / 800 mm		
102565-TB *	Shifter Assembly, Semi-Automatic, 630 mm	$ 6,300.00
102565-TB *	Shifter Assembly, Semi-Automatic, 800 mm	$ 6,500.00
10049200	Roller Guide Assembly	$ 80.00
10049300	Roller Assembly	$ 80.00
10237100	Valve, Shifter Control Assembly	$ 105.00
10253400	Valve, Air Assembly	$ 44.00
10253800	Cylinder Assembly, Push/Pull, Right Hand, 24"	$ 730.00
10253900	Cylinder Assembly, Push/Pull, Left Hand, 24"	$ 730.00
10423100	Seal Kit, Push/Pull Cylinder	$ 52.00
10288200	Valve, Shifter Assembly	$ 320.00
10288400	Valve, Air Assembly	$ 110.00
10288601	Lift Cylinder Assembly, Right Hand	$ 225.00
10288600	Lift Cylinder Assembly, Left Hand	$ 225.00
10147800	Air Hose, 25'	$ 75.00
10936501	Filter/Regulator, 3/8", With Gauge	$ 140.00
10056500	Handle Grip, Rubber	$ 10.00
1000 mm / 1200 mm / 1500 mm		
102579-TB *	Shifter Assembly, Semi-Automatic, 1000 mm	$ 6,700.00
102586-TB *	Shifter Assembly, Semi-Automatic, 1200 mm	$ 6,900.00
102597-TB *	Shifter Assembly, Semi-Automatic, 1500 mm	$ 7,100.00
10049200	Roller Guide Assembly	$ 80.00
10049300	Roller Assembly	$ 80.00
10237100	Valve, Shifter Control Assembly	$ 105.00
10253400	Valve, Air Assembly	$ 44.00
10253801	Cylinder Assembly, Push/Pull, Right Hand, 30"	$ 790.00
10253901	Cylinder Assembly, Push/Pull, Left Hand, 30"	$ 790.00
10423100	Seal Kit, Push/Pull Cylinder	$ 52.00
10288200	Valve, Shifter Assembly	$ 320.00
10288400	Valve, Air Assembly	$ 110.00
10288601	Lift Cylinder Assembly, Right Hand	$ 225.00
10288600	Lift Cylinder Assembly, Left Hand	$ 225.00
10147800	Air Hose, 25'	$ 75.00
10936501	Filter/Regulator, 3/8", With Gauge	$ 140.00
10056500	Handle Grip, Rubber	$ 10.00

* Note: Consult Factory with J-Press serial number for specific part number.

Prices subject to change.

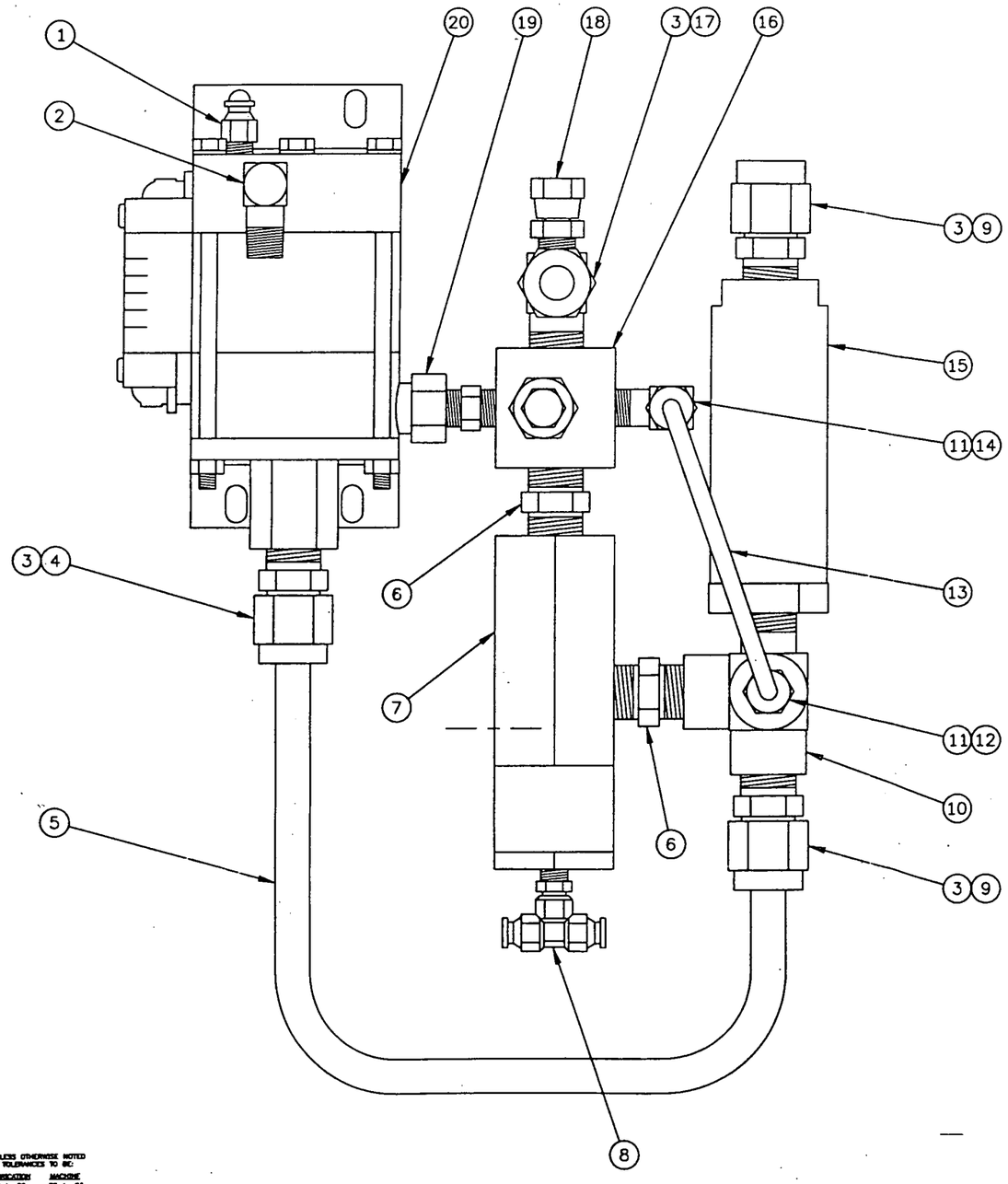

ITEM	QTY.	PART NO.	DESCRIPTION/MAT'L	RAW STOCK NO.	RAW STOCK QTY.
20	1	10042600	HYDRAULIC PUMP	–	–
19	1	10018101	PIPE NIPPLE	–	–
18	1	10020900	MALE PIPE ADAPTER	–	–
17	1	10042300	MALE ELBOW, PORTED 1/4NPT	–	–
16	1	10057600	RELIEF VALVE	–	–
15	1	10021000	HYDRAULIC IN–LINE FILTER	–	–
14	1	10017501	MALE ELBOW	–	–
13	1	10057200	1/4O.D. X .035W X 8.0SS TUBE	–	–
12	1	10017400	MALE CONNECTOR	–	–
11	2	10018800	TUBE SLEEVE 1/4	–	–
10	1	10081000	STREET TEE PORTED 1/4NPT	–	–
9	2	10017402	MALE CONNECTOR	–	–
8	1	10019900	MALE BRANCH TEE SWIVEL	–	–
7	1	10042701	RELEASE VALVE	–	–
6	2	10018100	PIPE NIPPLE	–	–
5	1	10057305	1/2O.D. X .049W X 15.5SS TUBE	–	–
4	1	10017401	MALE CONNECTOR	–	–
3	4	10018801	TUBE SLEEVE 1/2	–	–
2	1	10018300	MALE PIPE ELBOW	–	–
1	1	10019401	MALE CONNECTOR	–	–

CHG. BY	SYM.	DESCRIPTION	E.C.N.	DATE
DLM	A	REDRAWN ON CAD WITH BOM UPDATE	981	06-05-90

PRESS 630 800 1000

SCALE 3/4

DATE 05-02-90

SUPERSEDES

SUPS'D BY

DRAWN DLM

CH'K

SHT. 1 OF 1

TITLE HYDRAULIC MODULE

C

DWG. NO. 10017100

UNLESS OTHERWISE NOTED TOLERANCES TO BE:

FABRICATION	MACHINE
.00 ± .06	.00 ± .03
< ± 1°	.000 ± .005
	< ± 1°

DO NOT SCALE

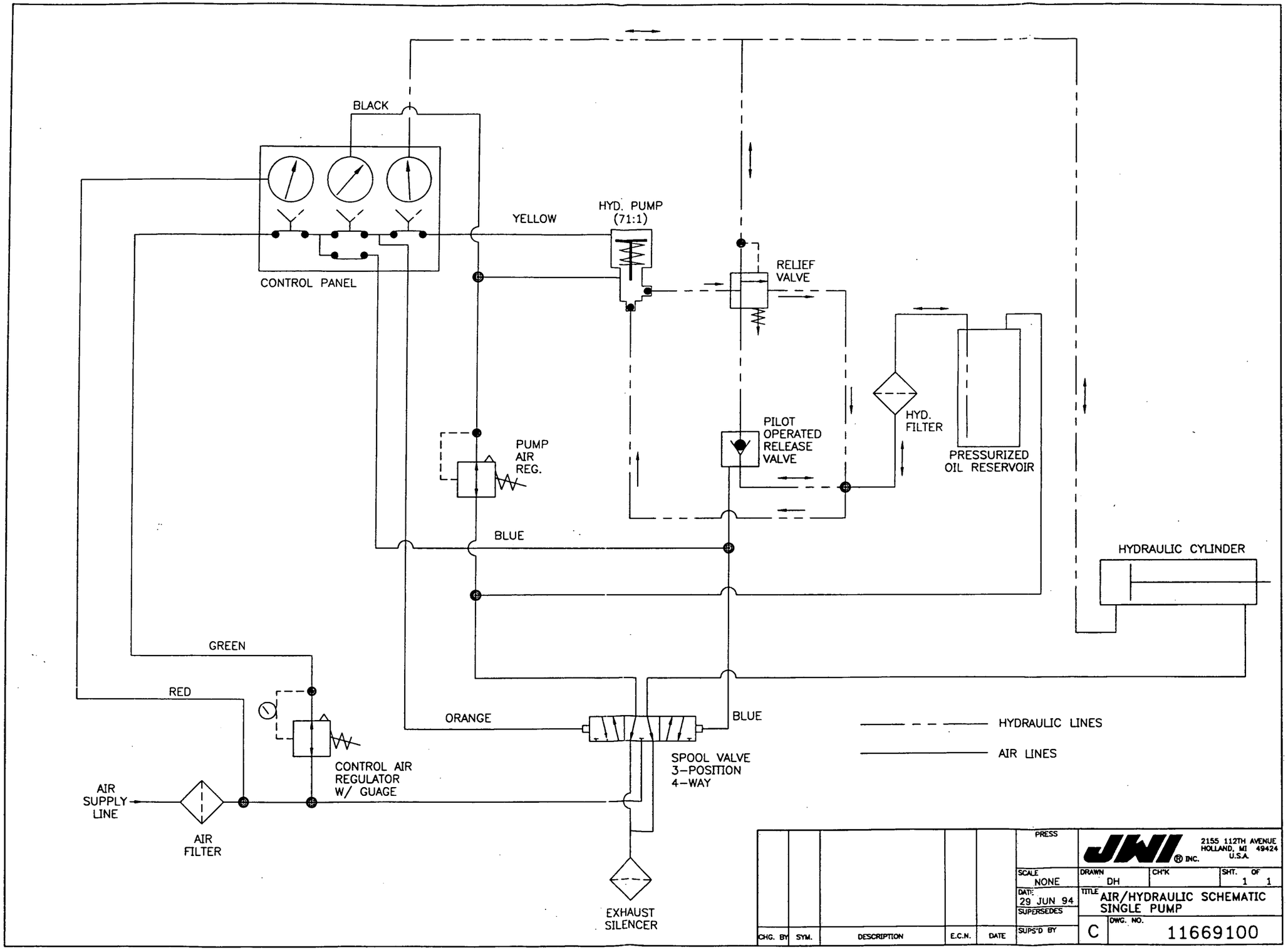
BLACK
CONTROL PANEL
YELLOW
HYD. PUMP
(71:1)
RELIEF
VALVE
PILOT
OPERATED
RELEASE
VALVE
HYD.
FILTER
PRESSURIZED
OIL RESERVOIR
PUMP
AIR
REG.
BLUE
HYDRAULIC CYLINDER
GREEN
RED
ORANGE
BLUE
HYDRAULIC LINES
AIR LINES
CONTROL AIR
REGULATOR
W/ GUAGE
SPOOL VALVE
3-POSITION
4-WAY
AIR
SUPPLY
LINE
AIR
FILTER
EXHAUST
SILENCER
CHG. BY
SYM.
DESCRIPTION
E.C.N.
DATE
PRESS
SCALE
NONE
DATE:
29 JUN 94
SUPERSEDES
SUPS'D BY
JWI INC.
2155 112TH AVENUE
HOLLAND, MI 49424
U.S.A.
DRAWN
DH
CH'K
SHT. OF
1 1
TITLE
AIR/HYDRAULIC SCHEMATIC
SINGLE PUMP
C
DWG. NO.
11669100

APPROVAL DRAWING
ISSUE DATE 10 NOV 1994 BY V.V.H.
APPROVAL DATE ..... BY .....

AUTOMATIC PUMP CONTROL SYSTEM

GENERAL DESCRIPTION

The Automatic Pump Control System is designed to automatically increase the feed pump pressure during the filtration cycle. Low initial feed pressure allows a soft layer of slurry particles to be deposited on the filter cloth. This layer becomes the filtering media, enhancing the filterability of the incoming slurry. High initial feed pump pressures can build a very tightly packed, impermeable layer of solids on the filter cloth, restricting the flow of slurry, and ultimately the density of the cake.

The Automatic Pump Control System automatically increases the feed pressure in four intervals throughout the fill cycle. These intervals and pressure are fully adjustable to suit the type of slurry and the percentage of solids. Cycle completion and automatic shutdown occur by monitoring the cycling of the feed pump at the final pressure.

Also incorporated into the system is a low hydraulic pressure safety shut down device. Any time the hydraulic pressure drops below the preset limits, the system completely shuts down, eliminating any possible leaking. The control panel features various switches, pilot lights, and timers to give at-a-glance monitoring of the system.

Variables

1. Timers 1TR, 2TR, and 3TR are duration timers, simply running the designated pressure through the time specified. Timer 4TR monitors the time between strokes of the feed pump, it is not a duration timer. Therefore, slight changes in timer 4TR can greatly impact the cycle time and cake quality.

2. Pressure regulator four must be set at the terminal filtration pressure. This must not exceed the designed pressure of the JWI press.

3. The pressure switch should be set 5 psi (0.3 bar) or less below the terminal filtration pressure. The pressure switch operates timer 4TR by monitoring the air pressure to the air-driven pump. When the pressure switch achieves its setting, timer 4TR energizes and begins countdown. If the pump cycles, pressure is temporarily lost to the pressure switch, and timer 4TR starts countdown again. If the pump does not stroke during the designated time, timer 4TR times out, pumping stops, and the "Press Full" light comes on.

INSTALLATION AND SETUP

Initial Hookup

1. Mount the control panel near the filter press (unless factory installed).
2. Connect electrical service (see schematic).
3. Connect wires from the low hydraulic pressure switch, located in the pump cabinet, to the control panel (unless factory installed).
4. Install the air piloted regulator at the feed pump (see schematic).
5. Connect the pilot line and the pressure gauge line from the panel to the pilot regulator.
6. Connect a filtered and regulated air line supply to the control panel per .
7. Air supply should maintain not less than 100 psi (7 bar).

Setup

NOTE: Disconnect all power to control panel prior to making adjustments.

Timer and Regulator Settings

JWI recommends the following timer and regulator settings only as a starting point. These values will change depending on the specific process. Some slurries such as metal hydroxides dewater easily and have process times of only a few hours or less. Other slurries such as biological sludges are slower to dewater and may take 8-10 hours or more. Consult JWI if you need assistance setting filtration parameters.

Timer	Time	Regulator
1TR	30 minutes	Stage 1 - 25 psi
2TR	30 minutes	Stage 2 - 50 psi
3TR	30 minutes	Stage 3 - 75 psi
4TR	1 minute	Stage 4 - 100 psi

The psi settings of the solenoid controlled regulators will only show when the system is in operation and will read out on the regulated pressure gauge located on the control panel.

Pressure Switch Setting

The solenoid controlled regulator number four (4) must always carry a 5 psi (0.3 bar) higher reading than the adjustable air pressure switch setting.

See the operation section for detailed operation description.

OPERATION

1. Turn the On/Off switch on the control panel to the "On" position.

2. Press the green "Start" button. The system starts, showing a green "System On" light. NOTE: If the green system on light is not illuminated, and the system does not start, the yellow low hydraulic pressure light may indicate the press is not completely closed or at clamped pressure. If the yellow light comes on during the filling cycle, the pump system will completely shut down.

   a. Timer 1TR energizes, opening the number one solenoid valve, directing air through the number one regulator.
      - The lapsed timer indicator starts operating and continues through the entire cycle unless shut down manually, automatically, or by the low hydraulic pressure switch.
      - A 25 psi (1.7 bar) reading registers on the regulated pressure gauge.
      - The number one regulator opens the air piloted regulator to start operating the feed pump at 25 psi (1.7 bar).
      - The feed pump operates at 25 psi (1.7 bar) through the duration of the time set on 1TR.

   b. Timer 1TR times out and 2TR energizes, opening the number two solenoid valve, directing air through the number two regulator.
      - The lapsed timer indicator starts operating and continues through the entire cycle unless shut down manually, automatically, or by the low hydraulic pressure switch.
      - A 50 psi (3.5 bar)reading registers on the regulated pressure gauge.
      - The number two regulator opens the air piloted regulator to start operating the feed pump at 50 psi (3.5 bar).
      - The feed pump operates at 50 psi (3.5 bar) through the duration of the time set on 2TR.

   c. Timer 2TR times out and 3TR energizes, opening the number three solenoid valve, directing air through the number three regulator.
      - The lapsed timer indicator starts operating and continues through the entire cycle unless shut down manually, automatically, or by the low hydraulic pressure switch.
      - A 75 psi (5.2 bar) reading registers on the regulated pressure gauge.
      - The number three regulator opens the air piloted regulator to start operating the feed pump at 75 psi (5.2 bar).
      - The feed pump operates at 75 psi (5.2 bar) through the duration of the time set on 3TR.

   d. Timer 3TR times out and 4TR energizes, opening the number four solenoid valve, directing air through the number four regulator.
      - The lapsed timer indicator starts operating and continues through the entire cycle unless shut down manually, automatically, or by the low hydraulic pressure switch.

- A 100 psi (6.9 bar) reading registers on the regulated pressure gauge.
- The number four regulator opens the air piloted regulator to start operating the feed pump at 100 psi (6.9 bar).
- The feed pump continues to operate at 100 psi (6.9 bar) until 4TR indicates cycle complete.

3. The green "System On" light turns off, and the "Full" light illuminates. The press is now ready for opening or cake purging cycles (such as air blow, core blow, or cake wash if applicable).

TROUBLESHOOTING

TROUBLE	PROBABLE CAUSE	REMEDY
Pressing the "Start" button will not start a cycle.	1. Insufficient air supply to system. 2. Hydraulic pump not turned on. 3. Air supply switch not turned on.	1. Insure 100 psi (6.8 bar) system pressure. 2. 3. Follow press closing procedure for proper operation.
Pump stops in mid cycle- "Low Hydraulic Pressure" light illuminated.	1. Air supply pressure dropped and clamping force lost. 2. Press closure switches in wrong position.	1. Insure 100 psi (6.8 bar) system pressure. 2. "Air Supply" switch must be "On", "Hydraulic Pump" switch must be "On".

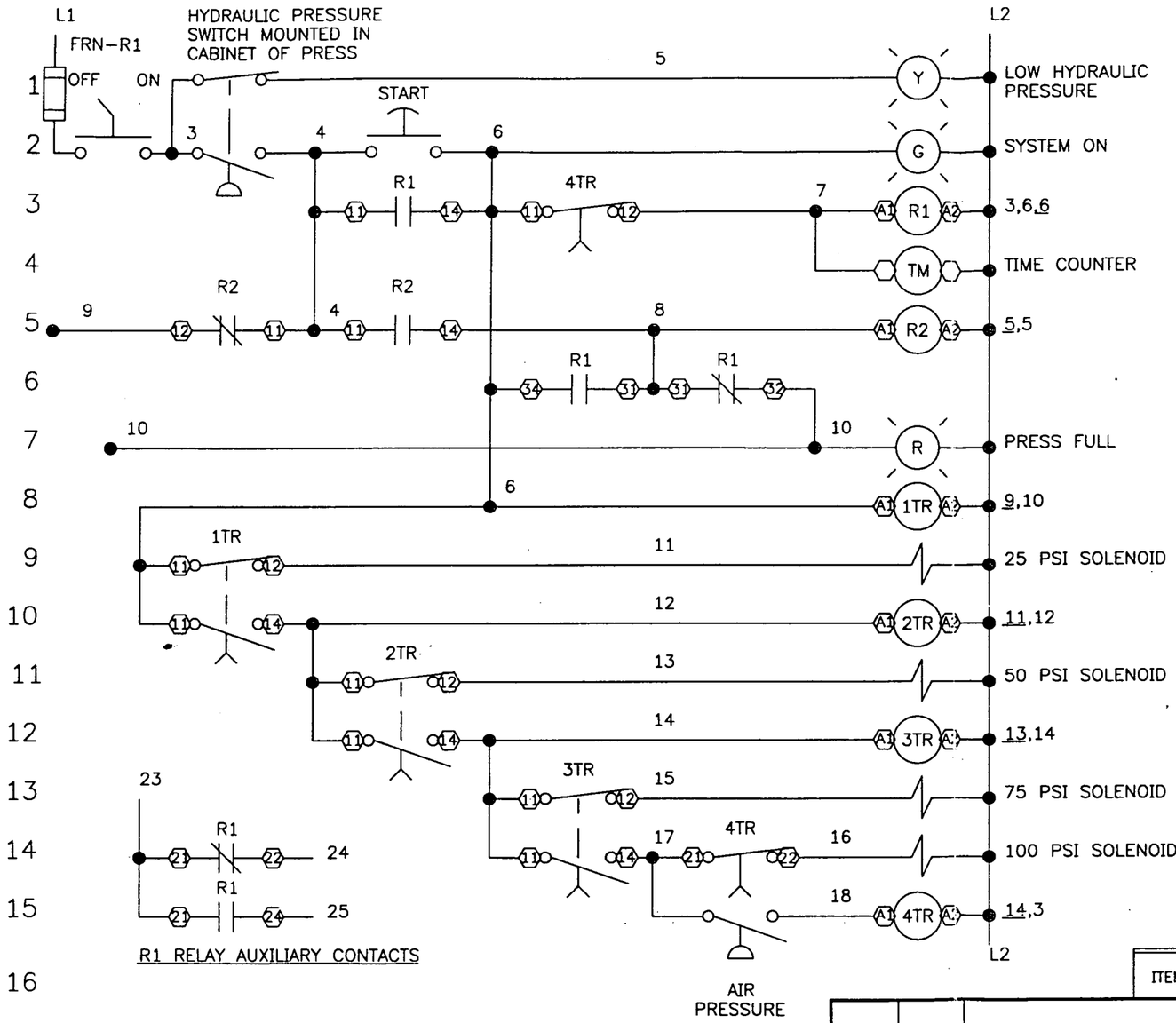

ITEM	QTY.	PART NO.	DESCRIPTION/MAT'L

CHG. BY	SYM.	DESCRIPTION	E.C.N.	DATE

ALLEN BRADLEY COMPONENTS

SCALE: NONE | DRAWN: JDH | CH'K | SHT. OF

DATE: 08-30-90

SUPERSEDES

SUPS'D BY

TITLE: AUTOMATIC PUMP CONTROL

DWG. NO. B-10692902

UNLESS OTHERWISE NOTED TOLERANCES TO BE:

FABRICATION	MACHINE
.00 ± .06	.00 ± .03
< ± 2°	.000 ± .005
	< ± 1°

DO NOT SCALE

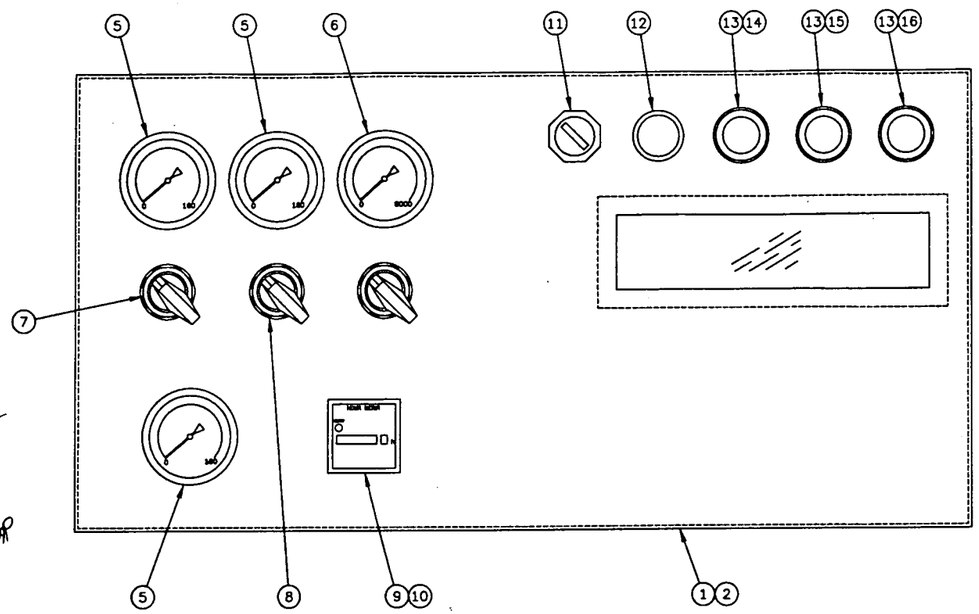

Gerry
115V
1AMP

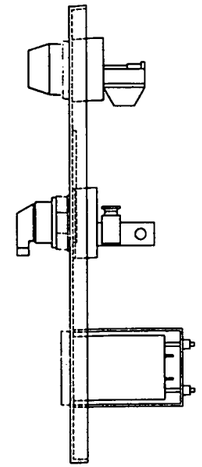

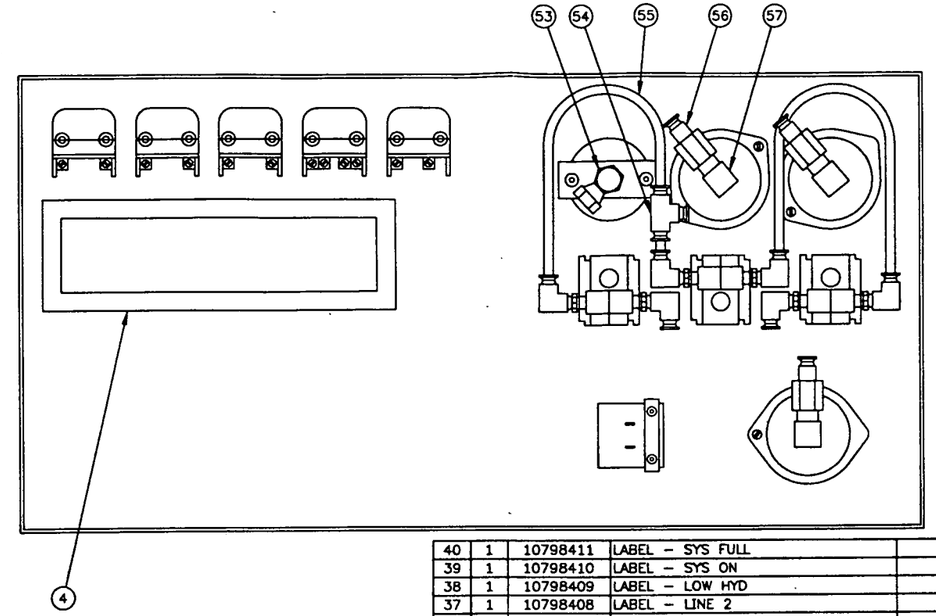

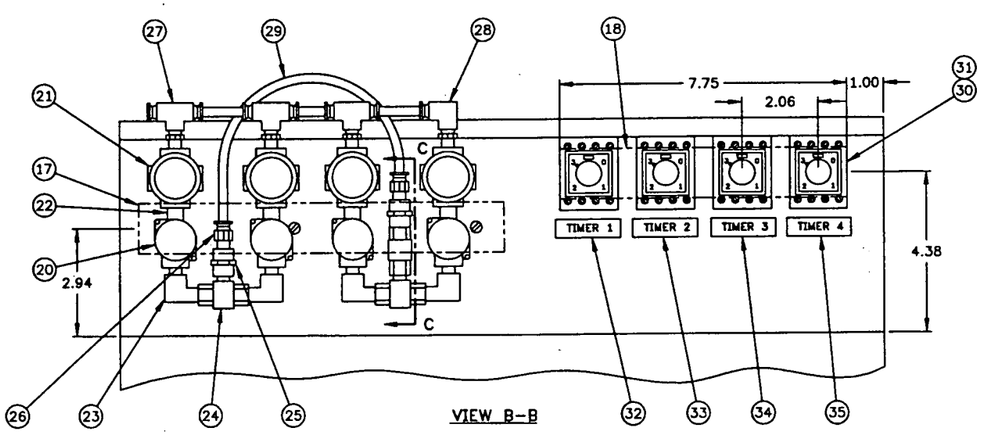

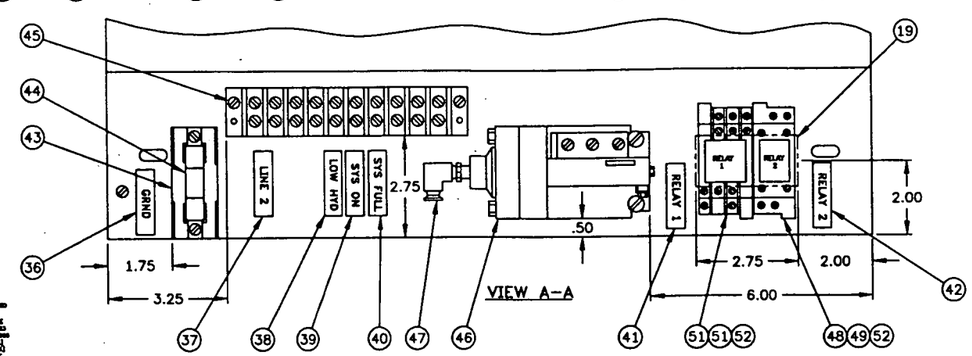

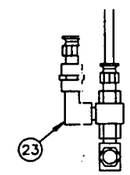

VIEW C-C

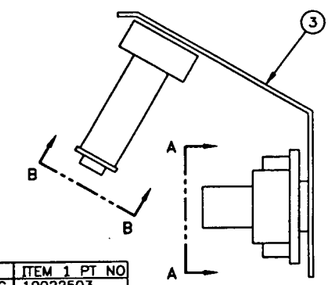

ASS'Y PART NO	DESCRIPTION	ITEM 1 PT NO
10185900	CYL BRKT MTG	10022503
10185901	LEG MTG L.H.	10022501
10185902	LEG MTG R.H.	10022502

	4	10038300	WASHER FLAT .25 SS	–	–
	4	10038800	NUT HX FULL .25–20 SS	–	–
	4	10066800	SCREW PAN HD SLT .16–32 X .25	–	–
	2	100315202	SCREW SELF DRL PHLP .19 X 1.00	–	–
	5	10315201	SCREW SELF DRL PHLP .19 X .50	–	–
	6	10315200	SCREW SELF DRL PHLP .19 X .75	–	–
57	3	10020000	ELBOW STREET .25 NPT – .25 FNPT	–	–
56	3	10019200	CONNECTOR .25 NPT – .25 TUBE	–	–
55			TUBING .25 OD CLEAR	10023900	2.000
54	1	10019501	TEE .25 TUBE	–	–
53	1	10020600	ELBOW SWIVEL .25 FNPT – .25 FNPT	–	–
52	4	10022006	CLIP – RELAY	–	–
51	1	10023203	RELAY LY3	–	–
50	1	10022008	SOCKET – CONNECTING PTF11–A	–	–
49	1	10023202	RELAY LY2	–	–
48	1	10022007	SOCKET – CONNECTING PTF08A–E	–	–
47	1	10019601	ELBOW .25 NPT – .25 TUBE	–	–
46	1	10609100	SWITCH – PRESSURE	–	–
45	1	10022701	BLOCK , TERMINAL	–	–
44	1	10024400	FUSE FRN–1	–	–
43	1	10022600	FUSE BLOCK	–	–
42	1	10798402	LABEL – RELAY 2	–	–
41	1	10798401	LABEL – RELAY 1	–	–
40	1	10798411	LABEL – SYS FULL	–	–
39	1	10798410	LABEL – SYS ON	–	–
38	1	10798409	LABEL – LOW HYD	–	–
37	1	10798408	LABEL – LINE 2	–	–
36	1	10798407	LABEL – GRND	–	–
35	1	10798406	LABEL – TIMER 4	–	–
34	1	10798405	LABEL – TIMER 3	–	–
33	1	10798404	LABLE – TIMER 2	–	–
32	1	10798403	LABLE – TIMER 1	–	–
31	4	10936101	TIMER ATC	–	–
30	4	10022000	SOCKET , CONNECTING	–	–
29			TUBING .25 OD RED	10023902	6.000
28	1	10019602	ELBOW .12 NPT – .25 TUBE	–	–
27	3	10019900	TEE .12 NPT – .25 TUBE	–	–
26	3	10019401	CONNECTOR .12 NPT – .25 TUBE	–	–
25	2	10020300	COUPLING .12	–	–
24	3	10023500	VALVE SHUTTLE	–	–
23	5	10020002	ELBOW 90 STREET .12	–	–
22	8	10020100	NIPPLE .125 X CLOSE	–	–
21	4	10024701	REGULATOR	–	–
20	4	10023300	VALVE – SOL.	–	–
19	1		TRACK PHOENIX (36") 2.75"	10140600	.0763
18	1		TRACK PHOENIX (36") 7.75"	10140600	.2152
17	1		TRACK PHOENIX (36") 10"	10140600	.2777
16	1	10241302	LENS CAP – RED	–	–
15	1	10241304	LENS CAP – AMB	–	–
14	1	10241303	LENS CAP – GRN	–	–
13	3	10022301	LIGHT PILOT , BASE	–	–
12	1	10022200	SWITCH – GRN PUSH BUTTON	–	–
11	1	10022100	SWITCH 2–POS	–	–
10	1	10593500	TIMER MOUNT FRAME	–	–
9	1	10023000	TIMER ATC	–	–
8	1	10041800	VALVE CONTROL ASS'Y 41P	–	–
7	2	10041900	VALVE CONTROL ASS'Y 31P	–	–
6	1	10023804	GAUGE 0–6000 PSI	–	–
5	3	10023600	GAUGE	0–160 PSI	–
4	1	10066600	PLEXIGLASS .12 X 3 X 9.5	–	–
3	1	10067300	MOUNTING PLATE	–	–
2	1	10568400	OVERLAY APCS	–	–
1	1	SEE TABLE	ENCLOSURE	–	–

ITEM	QTY.	PART NO.	DESCRIPTION/MAT'L	RAW STOCK NO.	RAW STOCK QTY.

CHG. BY	SYM.	DESCRIPTION	E.C.N.	DATE
TWP	B	ADDED AND REDRAWN ON CAD	1865	27 APR 93

JWI INC.
3150 112TH AVENUE
HOLLAND, MI 49424
U.S.A.

SCALE 1/2
DATE 27 APR 93
SUPERSEDES
SUPS'D BY
DRAWN TWP
CHK'K
SHT. 1 OF 1
TITLE APCS CABINET ASS'Y
D
DWG. NO. 10185900

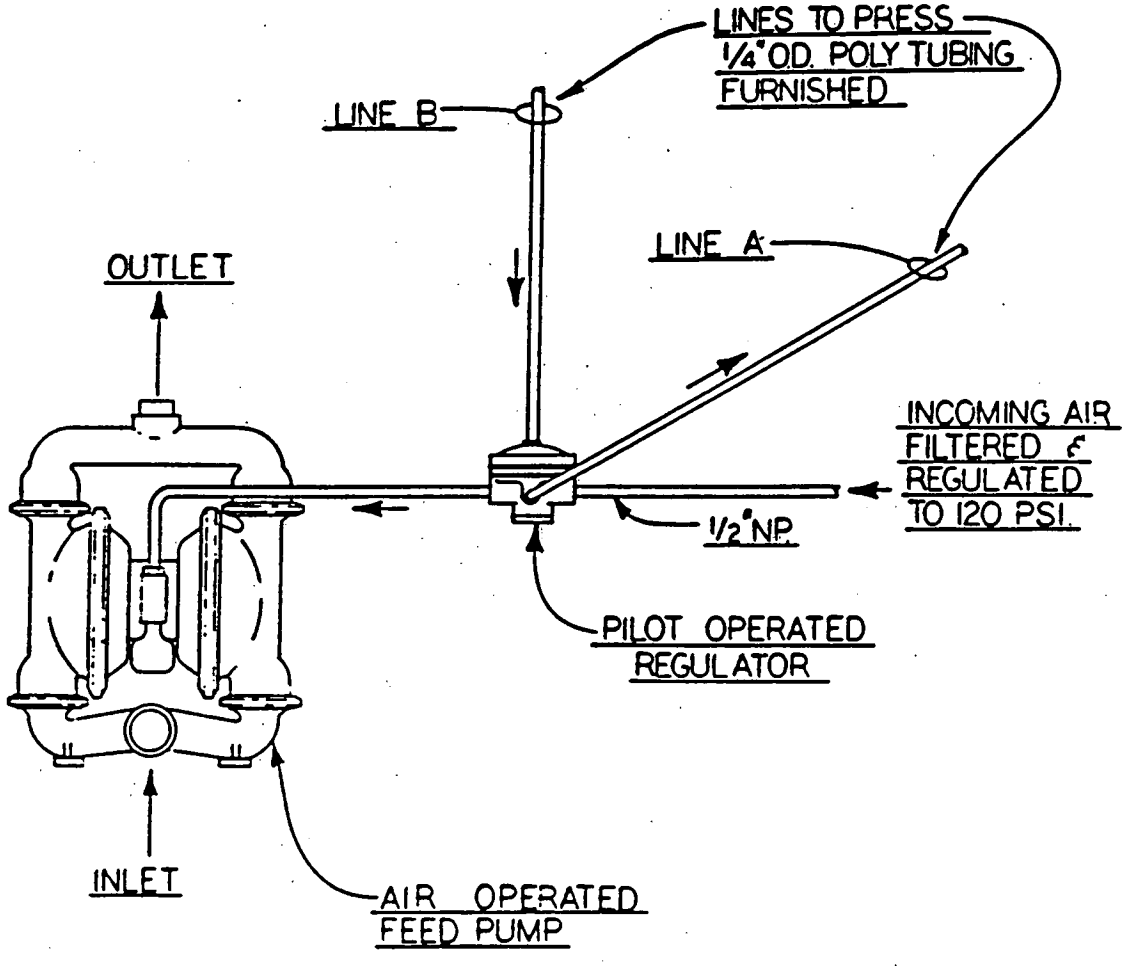

ITEM	QTY	PART NO.	DESCRIPTION	MAT'L	WT EA

JNI

SCALE ~ | DRAWN | CHECKED | REV.

DATE 11-29-83 | TITLE PILOT OPERATED REGULATOR HOOK-UP

DWG. | DESCRIPTION | E.C.R. | DATE

339A TDR

INSTALLATION INSTRUCTIONS
MAY, 1993

0339-275-05-00

DIMENSIONS:

INCHES
MILLIMETERS

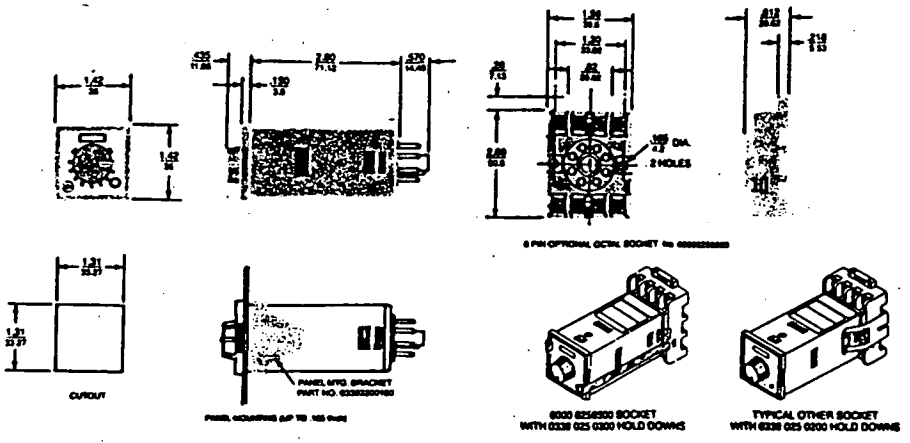

Before starting your design read the safety statement.

PANEL MOUNTING:

To panel mount, cut a 1 5/16" square cutout (1.31 inches).

1. Insert the 339A through the panel from the front with the plug going through the cutout first.
2. While holding the 339A in place, push the mounting bracket over the 339A from the back and snap into place as shown in the panel mounting dimensions drawing.
3. When using the 339A in a panel mounted configuration, the optional 03192614500 plug-on socket can be used. See illustraton below.

Wire Attachment Instructions

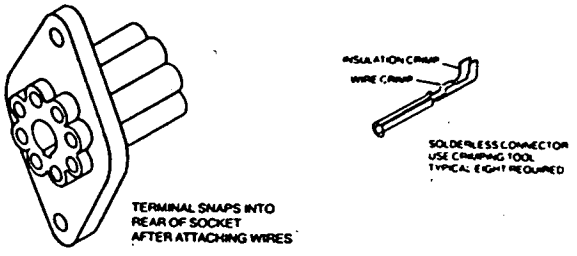

SETTING THE RANGE AND TIMING MODE:

Refer to the drawing. Using a small screwdriver inserted into the adjusting slot as shown, rotate the range or mode adjusting switch. The range selected will appear through the window at the top of the dial face. The timing mode is indicated on the housing.

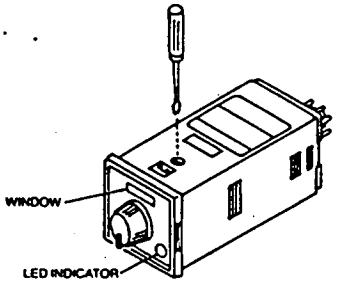

WIRING:

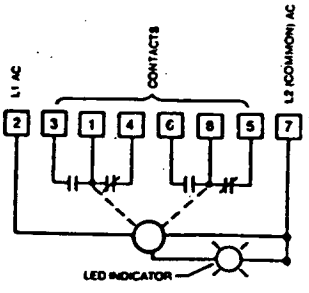

TERMINAL WIRING:

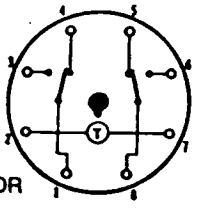

Bottom View of TDR

OPERATION

Timing begins when the start switch is closed. This starts an oscillator which runs at a frequency determined by the time setting. A fixed number of counts from the oscillator determines the end of the time cycle. The time required to accomplish this depends on the oscillator frequency. During timing, an LED located on the dial face blinks. For the first ten percent of the cycle, the LED repeatedly blinks once followed by a pause. For the second 10%, it blinks twice and so on indicating the cycle progress. It flashes rapidly and continuously after time out.

TYPICAL CIRCUIT

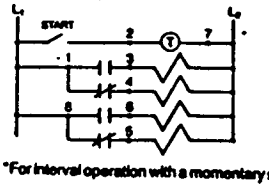

ON DELAY	INTERVAL
OCX	OXO
XXO	XOX
OCX	OXO
XXO	XOX

*For interval operation with a momentary start switch, jumper 2 and 3.

ON DELAY MODE

At time out, the built-in relay transfers its contacts. These contacts remain transferred until the start switch is opened or power is removed by some other means. The 339A then resets and is ready for another cycle.

INTERVAL MODE

When timing begins, the built-in relay transfers its contacts. The contacts remain transferred until time out. The timer will not start again until the start switch is opened or power is removed by some other means. The 339A then resets and is ready for another cycle.

SPECIFICATIONS For Model 339A

MODELS
Choice of two multirange units.
All models operate in on-delay or interval mode.

LOAD RELAY
TYPE: DPDT 10 AMPS resistive at 30 V DC or 250 VAC (or less)
¼ HP @ 120 VAC
¼ HP @ 240 VAC
240 VA @ 240 VAC
LIFE: 10 million operations with no load
100,000 operations with:
10 AMPS at 30 VDC (or less) or
10 AMPS at 250 VAC (or less)
CONTACT MATERIAL:
Silver Cadmium Oxide

TEMPERATURE RATING
-17° to 60°C (0° to 140°F)

WEIGHT
2.5 oz. (70g)

MOUNTING
Plug-in octal base; mounts in any position with retaining clips.
OPTIONS: surface-mounting socket
DIN rail mounting socket
panel-mounting adapter kit
plug-on socket kit

RANGES
Choice of two models
Six dial-selected ranges:
1.0 and 10 sec, min, hr.
or
0.3 and 3.0 sec, min, hr.

MINIMUM SETTING
3% of range, except 75 m sec on 0.3 sec and 1.0 sec ranges.

Setting accuracy ± 10% of range except 0.3 sec range ± 20% of range.

REPEAT ACCURACY
Varies as a function of line voltage and temperature but not of reset time
a. +/− 0.5%* at constant temperature and voltage. (or +/− 15 ms, whichever is greater)
b. +/− 1%* at constant voltage and full temperature range. (or +/− 25 ms, whichever is greater)
c. +/− 1.5%* at constant temperature and full voltage range. (or +/− 25 ms, whichever is greater)
d. +/− 2%* over full voltage and temperature range. (or +/− 30 ms, whichever is greater)
Variations of line voltage must be within 95 and 132V; of temperature between -17° and 60°C (0° and 140°F).
*Variation from average actual time.

RECYCLE CHARACTERISTICS
The timer can be used as a pulse generator with L1 power wired thru its NC contacts. The pulse will be 35 ms to 90 ms long. (40 m sec typical pulse.)

RESET
a. 0 to 20 ms power interruption: guaranteed no reset.
b. 20 ms to 90 ms: it may reset. (40 ms typical reset).
c. Over 90 ms guaranteed to reset.
The TDR will reset properly and not start timing when subjected to an open start switch leakage of 1.5 ma or less. (Prox switch and Triac drive applications)

POWER REQUIREMENTS
120 VAC: 95 - 132 VAC, 50/60Hz
Inrush - .4A
Running - .025 A

240 VAC: 190 - 264 VAC, 5060Hz
Inrush - .2A
Running - .013A

24 V AC/DC: 19.2 - 26.4 V AC/DC
Inrush - .4A
Running - .050A

12 V DC: 9.6 - 13.2 V DC
Inrush - .4A
Running - .075A

ORDERING CODE 339A 359 Q 2 X

BASIC TYPE — 339A

RANGE
- 359 Six dial-selected ranges (.3 or 3 sec, min, hr.)
- 200 Six dial-selected ranges (1 or 10 sec, min, hr.)

VOLTAGE AND FREQUENCY
- Q 120 VAC 50/60Hz
- R 240 VAC 50/60Hz
- T 24VAC50/60Hz, 24VDC
- E 12 VDC

ARRANGEMENT
- 2 On delay, interval mode
- 0 Special

FEATURES
- X Standard
- K Special

ACCESSORIES
- 00008258500 8 Pin surface/DIN rail socket
- 03390250300 Hold down for above socket (2 req'd)
- 03390250200 Hold down for other sockets (2 req'd)
- 03393200100 Panel mounting bracket
- 03192614500 Plug on socket kit (8-pin)

A WORD ABOUT SAFETY

Most of ATC's products are designed for general and not for specific applications. Because of this, we usually are not aware of how they eventually will be used. However, they are frequently employed in controlling automatic machinery or processes.
Although ATC makes products of high reliability, every product, given enough time, can be expected to fail. Statistically, devices can fail after a short period of time or a long period of time or anything in between. In essentially all cases, failure means failure to provide a logic signal or power to an electrical load when it should or to provide it when it should be absent. Less often, failure means failure to meet some other specification. But, in all cases, it means to do something unwanted or unexpected.
Since the failure of automatic machinery or processes can create hazardous conditions for personnel or property, whatever the definition of failure might be, it is necessary to consider the consequences of failure and design in such a way that failure will not create a hazard to personnel or property. The design must insure that any failure will result in a fail safe condition and there will be no danger to personnel and/or property involved in the use of the product.
Designs incorporating controls of any kind should be carefully considered to provide for their eventual failure.

IMPORTANT NOTICE

Our recommendations, if any, for the use of this product are based on tests believed to be reliable. The greatest care is exercised in the selection of our raw materials and in our manufacturing operations. However, since the use of this product is beyond the control of the manufacturer, no guarantee or warranty, expressed or implied is made as to such use or effects incidental to such use, handling or possession or the results to be obtained, whether in accordance with the directions or claimed so to be. The manufacturer expressly disclaims responsibility therefore. Furthermore, nothing contained herein shall be construed as a recommendation to use any product in conflict with existing laws and/or patents covering any material or use.

"Warranties of Sale, disclaimer thereof and limitations of liability are covered exclusively by Automatic Timing and Controls printed warranty statement for the controls. These instructions do not expand, reduce, modify or alter Automatic Timing and Controls warranty statement and no warranty or remedy in favor of a customer or any other person arises out of these instructions."

AUTOMATIC TIMING & CONTROLS COMPANY, INC.
a division of Sycon Corporation
959 Cheney Avenue, Marion, Ohio 43302
Phone: (614) 387-8827 • Fax: (614) 382-9080

Printed in U.S.A. 6/91

5703/4B Elapsed Timer Indicator

INSTALLATION INSTRUCTIONS
JULY, 1992

PN 5703-000-02-00

DESCRIPTION:

The series 5703 is a non-reset elapsed time indicator and the 5704 is a reset elapsed time indicator to measure the running time of electrically-operated equipment in tenths of an hour. The non-reset version has a 6-digit range and the reset version a 5-digit range.

Field convertible 50 or 60 Hz. by switch on rear of timer.

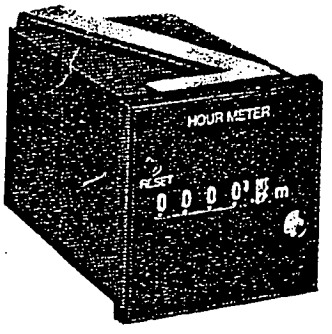

DIMENSIONS:

INCHES / MILLIMETERS

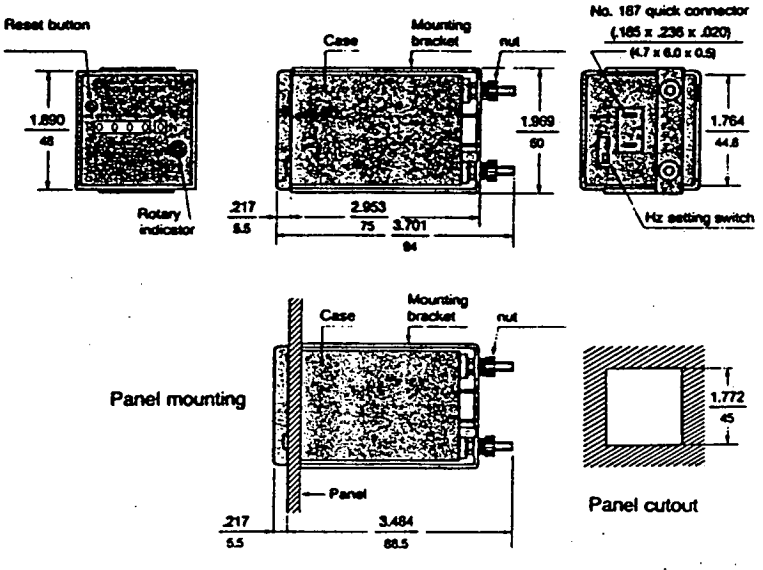

MOUNTING:

The unit is designed to front panel mount through a 45 mm² (1.77") cutout hole. Mount in a vibration free area. Hand tighten knurled mounting nuts (do not over tighten).

OPERATION:

When the 5703/4 is wired in parallel with electrical equipment, it accumulates running time and its indicator rotates when the monitored equipment is energized. The 5703 non-reset version provides a tamper-proof indication of total running time, continuously adding running time measurement to the previously accumulated total. The 5704 reset version starts a new running time total each time the reset button is pushed.

SPECIFICATIONS:

MODEL
Choice of two:
- 5703 non-reset
- 5704 pushbutton reset

RANGES
- 5703: 99,999.9 hours
- 5704: 9,999.9 hours

READOUT
White digit on black background

ACCURACY
As accurate as line frequency

TEMPERATURE RATING
– 10°C to 50°C (14°F to 122°F)

OPERATING VOLTAGE
Choice of:
- 24V AC, 50/60 Hz.
- 120V AC, 50/60 Hz.
- 240V AC, 50/60 Hz.

TERMINALS
Integral flat-blade plug terminals: accept 3/16" female push-ons or solder connections.

WEIGHT
NET: 5 oz.
SHIPPING: 8 oz.

ORDERING CODE 5703B 102 Q 00XX

BASIC MODEL

5703B	non-reset
5704B	pushbutton reset

RANGE

102	99,999.9 hours (5703 only)
109	9,999.9 hours (5704 only)
000	Special

VOLTAGE AND FREQUENCY

Q	120/50/60
R	240/50/60
T	24/50/60
K	Special

FEATURES

00XX	Standard
00KX	Special

ACCESSORIES

57031250100	Retrofit mounting frame

Before starting your design, read the safety statement in the front of the ATC catalog.

A WORD ABOUT SAFETY

Most of ATC's products are designed for general and not for specific applications. Because of this, we usually are not aware of how they eventually will be used. However, they are frequently employed in controlling automatic machinery or processes. Although ATC makes products of high reliability; every product, given enough time, can be expected to fail. Statistically, devices can fail after a short period of time or a long period of time or anything in between. In essentially all cases, failure means failure to provide a logic signal or power to an electrical load when it should or to provide it when it should be absent. Less often, failure means failure to meet some other specification. But, in all cases, it means to do something unwanted or unexpected.

Since the failure of automatic machinery or processes can create hazardous conditions for personnel or property, whatever the definition of failure might be, it is necessary to consider the consequences of failure and design in such a way that failure will not create a hazard to personnel or property. The design must insure that any failure will result in a fail safe condition and there will be no danger to personnel and/or property involved in the use of the product.

Designs incorporating controls of any kind should be carefully considered to provide for their eventual failure.

IMPORTANT NOTICE

Our recommendations, if any, for the use of this product are based on tests believed to be reliable. The greatest care is exercised in the selection of our raw materials and in our manufacturing operations. However, since the use of this product is beyond the control of the manufacturer, no guarantee or warranty, expressed or implied is made as to such use or effects incidental to such use, handling or possession or the results to be obtained, whether in accordance with the directions or claimed so to be. The manufacturer expressly disclaims responsibility therefore. Furthermore, nothing contained herein shall be construed as a recommendation to use any product in conflict with existing laws and/or patents covering any material or use.

"Warranties of Sale, disclaimer thereof and limitations of liability and covered exclusively by Automatic Timing and Controls printed warranty statement for the controls. These instructions do not expand, reduce, modify or alter Automatic Timing and Controls warranty statement and no warranty or remedy in favor of a customer or any other person arises out of these instructions."

AUTOMATIC TIMING & CONTROLS
a division of Sycon Corporation
959 Cheney Avenue, Marion, Ohio 43302
Phone: (614) 387-8827 • Fax: (614) 382-9080

Printed in U.S.A.

Pressure
Model PDCA

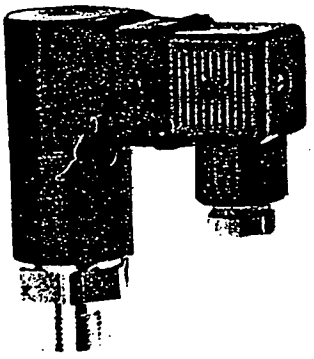

- Field adjustable
  5 to 5000 psi (.35 to 350 Bar)
  Increasing Pressure
- Compact design
- Low cost
- IP 65 enclosure (NEMA13)
- Din 43650A termination
- Optional Port Material, Steel, Brass or Stainless Steel

Technical Data

The PDCA model is an inline, compact pressure switch which is field adjustable from 0.35 Bar (5 psi) to 350 Bar (5000 psi) rising pressure depending upon the combination of spring rate to actuator area. See the table below for further information.

The "cushion" supported diaphragm, used on all switches where system pressures exceed 35 Bar (500 psi), is a proven concept which prevents any extrusion of the elastomer diaphragm even at pressures of up to 545 Bar (8000 psi).

Optional diaphragm materials include epichlorohydrin (standard), viton and EPR. The standard electrical circuit used is a three wire, 7 amp, snap action micro switch. The body material is aluminum and the protection is to IP 65.

The temperature range is −40° to +180°F (250°F viton). Set point repeatability is ±1%.

Technical Specifications

MODEL	*ADJ. RANGE		DEAD BAND	MAXIMUM PRESSURE		WETTED AREA
	BAR	PSI-RISING		BAR	PSI	
1	.30-1.25	5- 20	15%	35	500	ELASTOMER AND STEEL (STANDARD) OPTIONAL SS OR BRASS
2	1- 7	15- 100	15%	545	8000	
3	7- 60	100- 750	10%	545	8000	
4	60-210	750-3000	10%	545	8000	
5	140-350	2000-5000	10%	545	8000	

Installation Data

Adjustable Range 0.35 - 280 BAR (5 - 4000 psi)

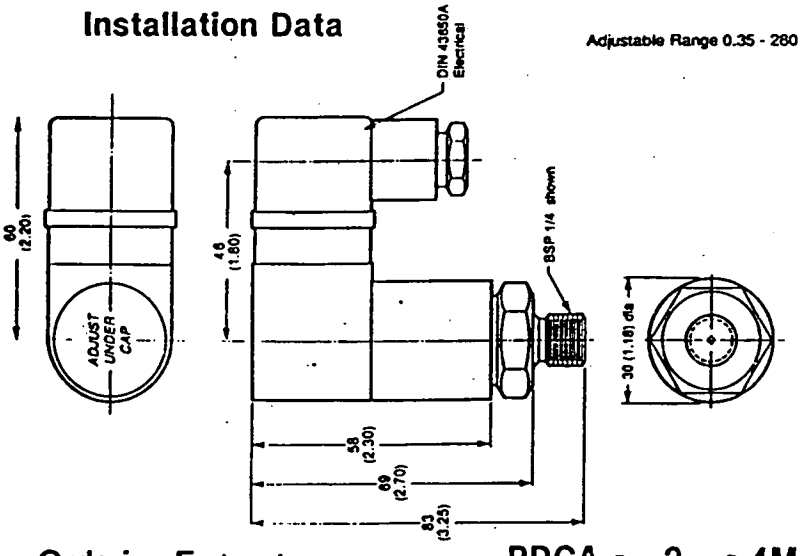

Electrical Specifications

Voltage	Inductive	Resistive
125/250 VAC	5 amp	7 amp
12 VDC	7 amp	7 amp
24 VDC	5 amp	7 amp

Standard Electrical Circuit		
Wire Color	DIN 43650 Number	C-Circuit
Black	1	Common
Green	2	N. Closed
Red	3	N. Open

Ordering Example: PDCA - 2 - 4MC - HC - 1

PDI designation
PDCA single set point model

Range
See Tech. Spec. Data
1
2
3
4
5

***Medium Connection**
2M-1/8 NPT Male
4M-1/4 NPT Male
4S-7/16-20 SAE Male
6S-9/16-18 SAE Male
4FS-1/4 NPT 304 SS Female
4FB-1/4 NPT Brass Female
4G-1/4 BSP Male
2G-1/8 BSP Male

Circuit
"C" - SPDT standard

Electrical Connection
HC-DIN 43650A Cable clamp
HN-DIN 43650A 1/2 in. Conduit

Options
1-Viton Diaphragm
2-EPR Diaphragm
To add visual light to DIN 43650A connector select one of the following options.
5A-110/220 VAC-NC
5C-110/220 VAC-NC/NO

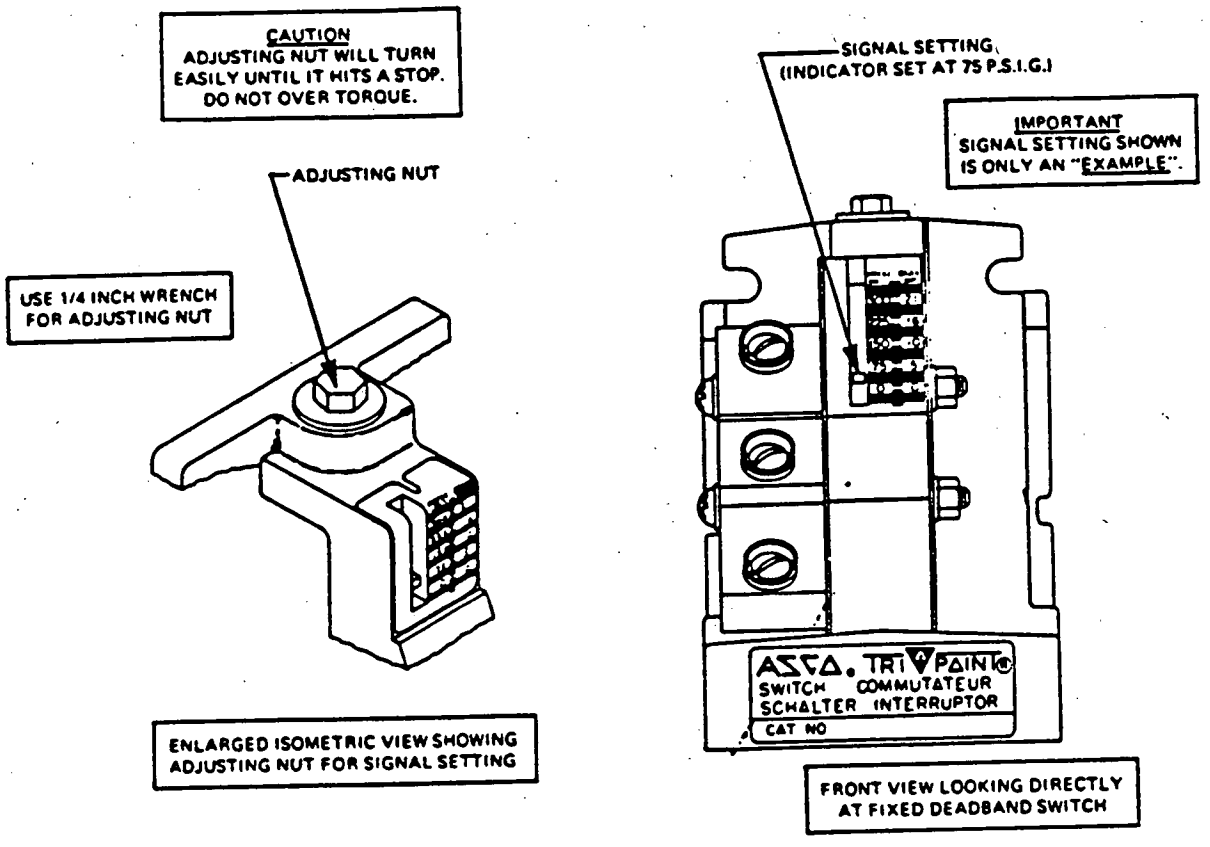

Figure 1. Adjustment (Signal Setting) of Fixed Deadband Switch

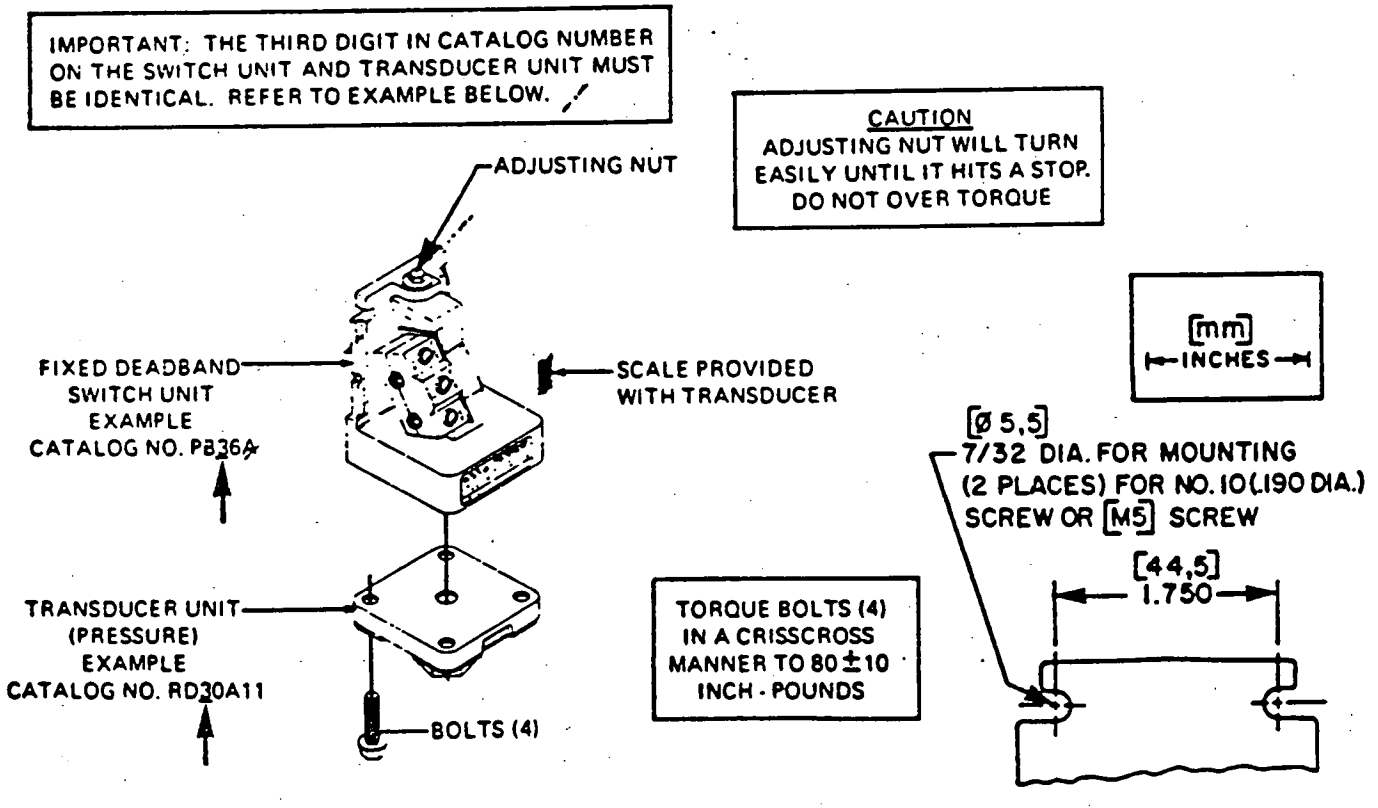

Figure 2. Open Frame Switch and Mounting Dimensions (Switch Unit and Transducer Unit to be Assembled)

INSTALLATION AND MAINTENANCE INSTRUCTIONS

TRIPOINT® switches

FIXED DEADBAND COMPACT LINE SWITCHES OPEN FRAME, GENERAL PURPOSE OR WATERTIGHT SWITCH ENCLOSURES

SERIES

PB10, PB11, PB16
PB20, PB21, PB26
PB30, PB31, PB36

Form No. P7034

DESCRIPTION

The Fixed Deadband Compact Line Switch is of rugged aluminum alloy construction. The switch may be provided with a General Purpose NEMA Type 1 Switch Enclosure, a Watertight NEMA Type 3 and 4 Switch Enclosure or an open-frame switch.

The compact line switch may be supplied as a complete unit, that is, the switch assembly unit and transducer are completely assembled or as separate units to be assembled upon installation. The actuation (set) point is adjustable over the full range of the switch. The reactuation (reset) point is fixed relative to the actuation point and cannot be adjusted. The switch assembly can be mated with a wide selection of interchangeable pressure, temperature and mechanical transducers to cover a broad range of pressures, fluids, temperatures and mechanical movements. The switch will control electrical circuits in response to changes in pressure, temperature or mechanical signals.

IMPORTANT: This sheet is designed to cover the installation and use of this switch on pressure transducers, temperature transducers and mechanical transducers. Review this sheet and select the paragraphs that apply to your particular installation and application. Throughout the sheet, the word "signal" will be used in place of pressure, temperature or mechanical changes.

INSTALLATION

Check the nameplate for the correct catalog number, pressure range, temperature range, media and rated over range pressure or temperature. Nameplates are located on side cover and on the bottom of the transducer. Check to be sure the third digit in each number is the same. If not, the unit should not be used. (Refer to Figure 2)

IMPORTANT: All internal adjustments have been made at the factory. Any adjustment, alteration or repair to the internal parts of the switch other than stated herein voids all warranties. Signal setting adjustments required are made by adjusting nut on the top of the switch.

TEMPERATURE LIMITATIONS

Maximum ambient temperature is 60°C (140°F). Maximum fluid temperature is 82°C (179°F). For steam service, the fluid temperature with a pigtail (syphon tube or condensate loop) installed directly into the transducer will be below 82°C (179°F). For higher ambient and fluid temperature limitations, consult factory.

ASSEMBLY OF SWITCH AND TRANSDUCER UNITS (Refer to Figure 2)

IMPORTANT: The switch unit and transducer unit may be provided as a complete assembly or as separate units. If separate units are provided, refer to Form No. P7035 for a complete listing of switch unit and transducer unit combinations. Form No. P7035 is provided to insure that the proper switch unit be assembled to the proper transducer unit.

Pay careful attention to exploded view provided in Figure 2 for assembly of switch unit and transducer unit. Proceed in the following manner:

1. CAUTION: The third digit in the catalog number on both the switch unit and the transducer unit must be identical. If not, do not assemble to each other. If the same, proceed.
2. Remove bolts (4) from base of switch unit. On general purpose and watertight constructions, remove switch cover.
3. Remove instruction label and pressure, temperature or mechanical switch range scale from the transducer unit.
4. Place transducer unit on base of switch unit and assemble. Start bolts (4) approximately two turns by hand to avoid the possibility of cross threading. After initial engagement, torque bolts (4) in a crisscross manner to 80 ± 10 inch-pounds.
5. Remove backing paper from range scale and install on the front of the switch body over the opening for the adjusting indicator point.

POSITIONING

Switch may be mounted in any position.

MOUNTING

For mounting dimensions for open-frame switch, refer to Figure 2. For mounting dimensions for general purpose switch enclosures, refer to Figure 3. For all switches, an optional mounting bracket is available. For mounting bracket dimensions, refer to Figure 6.

PIPING/TUBING (PRESSURE TRANSDUCER)

Adequate support of piping and proper mounting of switch should be made to avoid excessive shock or vibration. To minimize the effect of vibration on a switch, mount perpendicular to vibration. Connect piping or tubing to switch at base of transducer. It is recommended that flexible tubing be used whenever possible. Apply pipe compound sparingly to male pipe threads only. If applied to transducer threads, it may enter the transducer and cause operational difficulty. Pipe strain on switch should be avoided by proper support and alignment of piping. When tightening pipe, do not use switch as a lever. Wrenches applied to transducer body or piping are to be located as close as possible to connection point. **IMPORTANT: For steam service, install a condensate loop (pigtail or steam syphon tube) directly into the pressure transducer.**

CAUTION: To avoid damage to the transducer body, DO NOT OVERTIGHTEN PIPE CONNECTIONS. If TEFLON* tape, paste or similar lubricant is used, use extra care due to reduced friction.

IMPORTANT: To eliminate the effect of undesirable pressure fluctuations in the system, install a surge suppressor.

*DuPont's Trademark for its TFE-fluorocarbon Resin.

WIRING

Wiring must comply with Local and National Electrical Codes. The general purpose switch enclosure is provided with a 7/8 diameter hole to accommodate 1-2 inch electrical hub or connector. It is recommended that a flexible conduit connection be used. If rigid conduit is used, do not consider it or use it as a means of supporting (mounting). For watertight switch enclosures, a watertight conduit hub must be installed in the 7/8 diameter hole, use conduit hub Part No. PP01 or equivalent. IMPORTANT: Electrical load must be within range stated on nameplate. Failure to stay within the electrical range of the switch rating may result in damage to or premature failure of the electrical switch. Number 14 AWG wire is recommended. CAUTION: Do not exert excessive screwdriver force on snap switch when making terminal connections. When connections are made, be sure there is no stress on the wire leads. Either conditions may cause malfunction of switch.

STANDARD SWITCH AND OPTIONAL SWITCH SUFFIX "J" ATMOSPHERE SEALED ELECTRICAL RATING

5 Amps Res., 125, 250 VAC
1/8 HP 125 VAC
1/4 HP 250 VAC
1/2 Amp. Res., 125 VDC
1/4 Amp. Res., 250 VDC

SCHEMATIC FOR STANDARD AND SUFFIX "J" SWITCHES

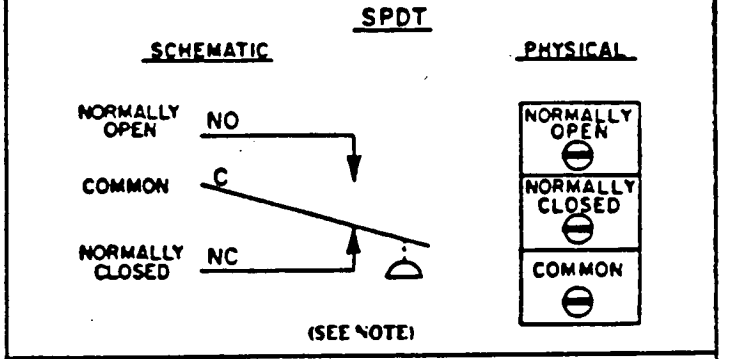

OPTIONAL SWITCH SUFFIX "K" DOUBLE POLE DOUBLE THROW ELECTRICAL RATING AND SCHEMATIC

5 Amps Res., 125, 250 VAC
1/8 HP 125 VAC
1/4 HP 250 VAC
1/2 Amp Res., 125 VDC
1/4 Amp Res., 250 VDC

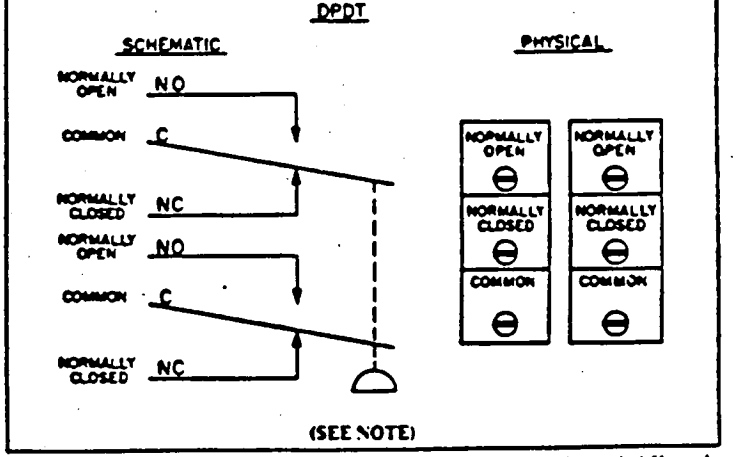

NOTE: Terminal Connections (C, NC & NO) on snap switch are located differently then shown in schematic above. Common "C" is located at the bottom. Normally Closed "NC" is located in the center. Normally Open "NO" is located at the top.

Form No. P7034 PRINTED IN U.S.A. 1978 Automatic Switch Co. FLORHAM PARK, NEW JERSEY 07932

© Automatic Switch Co.

JWI 8.24 A 12/84

INSTALLATION OF TEMPERATURE TRANSDUCERS
(Refer to Figure 5)

DIRECT PROBE

The Direct Probe (local) Temperature Transducer is provided with 1/2 inch N.P.T. connection. When installing, do not use switch unit as a lever for tightening. Use wrenching flats provided at base of transducer for tightening.

CAPILLARY AND BULB

The Capillary and Bulb (remote) Temperature Transducers are provided with a length of capillary and a 3/8 inch diameter sensing bulb. CAUTION: Do not bend capillary at sharp angles. For proper operation, be sure sensing bulb is completely immersed in fluid and not in contact with heating element or anything that would directly affect the temperature of the fluid being sensed.

THERMAL WELL (Optional Feature)

A Thermal Well may be used for Capillary and Bulb (remote) or Direct Probe (local) Temperature Transducers. The thermal well affords protection for the sensing bulb and allows removal of the sensing bulb while maintaining a pressure-tight vessel. When installing sensing bulb in thermal well, be sure that it is fully inserted. Where a thermal well already exists, jam nuts may be obtained to adapt the capillary and bulb to the existing thermal well. The existing thermal well must be for a 3/8 diameter sensing bulb.

UNION CONNECTOR (Optional Feature)

A union connector will allow direct mounting of the sensing bulb in the fluid being controlled. Install union into piping connection before tightening union onto bulb. For maximum performance, the bulb should be inserted in the union connection so that the end of the sensing bulb is even with the end of the union connector nut. Do not apply excessive torque when tightening union connector nut.

ADJUSTMENT (SIGNAL SETTING) OF FIXED DEADBAND SWITCH

To make adjustments, (signal setting) a 1/4 inch wrench and a pressure or temperature gage (within suitable range) are required. If electrical connection (to line of final application) of the switch is not desirable, a battery powered test lamp or ohm meter may be used. Pressure, temperature or mechanical range scales should be used for initial signal setting. These will be accurate within 5%. Adjust switch until pointer is in the middle of the solid red line below the desired range. For exact signal setting, proceed as follows:

ADJUSTMENT (SIGNAL SETTING) OF NORMALLY CLOSED AND AND NORMALLY OPEN FIXED DEADBAND SWITCH, INCREASING SIGNAL (Refer to Figure 1)

1. If the fixed deadband switch is in the line of final application when adjustment (signal setting) is made, be sure switch can be test operated without affecting other equipment.
2. On general purpose and watertight constructions, remove switch cover.
3. Turn adjustment nut until signal setting indicator is fully up. Use a 1/4 inch wrench for adjusting nut. CAUTION: Adjusting nut will turn easily until it hits a stop. Do not over torque; over torquing may cause damage.
4. Follow steps in chart below to make signal setting.

Steps of Adjustment	Normally Closed		Normally Open	
	Electrical Connection To Switch	Position Of Test Lamp On-Off	Electrical Connection To Switch	Position Of Test Lamp On-Off
1. Starting with zero signal connect test lamp to common and . . .	Normally Closed Terminal	On	Normally Open Terminal	Off
2. Apply desired actuation signal. Then back off signal adjusting nut until switch actuates.	Normally Closed Terminal	Off (Switch Open)	Normally Open Terminal	On (Switch Closed)
3. Lower signal to check reactuation signal.	Normally Closed Terminal	On (Switch Closed)	Normally Open Terminal	Off (Switch Open)

5. Cycle between actuation and reactuation signals and make minor adjustment to nut as required to achieve the exact signal setting.
6. After setting has been made, make permanent electrical connections. **WARNING: Be sure power is off when electrical connections are made.**

ADJUSTMENT (SIGNAL SETTING) OF NORMALLY CLOSED AND NORMALLY OPEN FIXED DEADBAND SWITCH, DECREASING SIGNAL (Refer to Figure 1)

1. If the fixed deadband switch is in the line of final application when adjustment (signal setting) is made, be sure switch can be test operated without affecting other equipment.
2. On general purpose and watertight constructions, remove switch cover.
3. Turn adjustment nut until signal setting indicator is fully down. Use a 1/4 inch wrench for adjusting nut. CAUTION: Adjusting nut will turn easily until it hits a stop. Do not over torque; over torquing may cause damage.
4. Follow steps in the chart below to make signal setting.

Steps of Adjustment	Normally Closed		Normally Open	
	Electrical Connection To Switch	Position Of Test Lamp On-Off	Electrical Connection To Switch	Position Of Test Lamp On-Off
1. Starting with initial signal above desired actuation setting, connect test lamp to common and . . .	Normally Closed Terminal	Off	Normally Open Terminal	On
2. Decrease signal to desired actuation signal. Then advance signal adjusting nut until switch actuates.	Normally Closed Terminal	On (Switch Closed)	Normally Open Terminal	Off (Switch Open)
3. Increase signal to check reactuation signal.	Normally Closed Terminal	Off (Switch Open)	Normally Open Terminal	On (Switch Closed)

5. Cycle between actuation and reactuation signals and make minor adjustment to nut as required to achieve the exact signal setting.
6. After setting has been made, make permanent electrical connections. **WARNING: Be sure power is off when electrical connections are made.**

TESTING OF INSTALLATION

If the adjustment of the switch has been made outside of the line of final application, the switch should be retested when installed in the line of final application. Follow adjustment instructions. Be sure switch can be test operated without affecting other equipment.

MAINTENANCE

WARNING: Turn off electrical power supply and line pressure to switch before removal or inspection.

IMPORTANT: Repair of the switch shall never be attempted in the field. The switch must be returned to the factory (Automatic Switch Company, Florham Park, New Jersey) or serviced only by an authorized factory representative. Address all service inquires to Automatic Switch Company, 50-56 Hanover Road, Florham Park, New Jersey 07932. The only adjustment which may be performed on the switch is changing the position of signal setting adjusting nut and replacement of the transducer unit. Replacement of transducer should be done if external leakage is evident.

PREVENTIVE MAINTENANCE

1. While in service, operate (cycle between two desired signals) the fixed deadband switch at least once a month to insure proper operation. If necessary, electrical wiring and pipe connection should be made so that switch can be test operated without affecting other equipment.
2. Periodic inspection of the switch, external surfaces only, should be carried out. Switch should be kept clean and free from paint, foreign matter, corrosion, icing and freezing conditions.
3. Keep the medium entering the switch as free from dirt and foreign materialas possible.

IMPROPER OPERATION

Switch will not actuate or actuates and reactuates undesirably.

1. **Incorrect Electrical Connection:** Check leads to switch. Be sure they are properly connected. Switch is marked "NO" for Normally Open, "NC" for Normally Closed and "C" for Common.
2. **Faulty Control Circuit:** Check electrical power supply to switch. Check for loose or blown-out fuses, open-circuited or grounded wires, loose connections at terminal block or switch. See nameplate for electrical rating and range.
3. **Incorrect Pressure:** Check pressure in system with suitable pressure gage. Pressure must be within range specified on nameplate.
4. **Incorrect Adjustment:** Check adjusting nut for proper setting. Refer to adjustment instructions.
5. **External Leakage:** Check to see that bolts (4) holding transducer to pressure switch are properly torqued (80 ± 10 inch-pounds). If bolts are tight and leakage is still evident, replace transducer. Refer to paragraph on "Assembly of Switch Unit and Transducer Unit."
6. **Excessive Vibration or Surges Causing Switch to Actuate and Reactuate:** Check for fluctuations in system and install pressure surge suppressor. Check switch mounting and be sure there is no excess vibration.
7. **Incorrect Temperature:** Check temperature in system with suitable thermometer. Temperature must be within range specified on nameplate. Check location of capillary and bulb for incorrect mounting. Refer back to paragraphs on "Installation of Temperature Transducers."

If the operation of the fixed deadband switch cannot be corrected by the above means, the entire switch unit should be replaced or an authorized factory representative consulted.

FOR SERVICE, REPLACEMENT OR NEW TRANSDUCER
Consult Factory or Authorized Factory Representative or Distributors

ORDERING INFORMATION
For Fixed Deadband Switch or New Transducer

When Ordering, Specify Catalog Numbers, Fluid, Pressure Range, Temperature Range, Serial Numbers and Maximum Sustained Pressure or Temperature.

NAMEPLATES ARE LOCATED ON SWITCH COVER AND BOTTOM OF TRANSDUCER.

ASCO Automatic Switch Co. FLORHAM PARK, NEW JERSEY 07932 Form No. P7034 PRINTED IN U.S.A. 1978

© Automatic Switch Co. 1978 ALL RIGHTS RESERVED

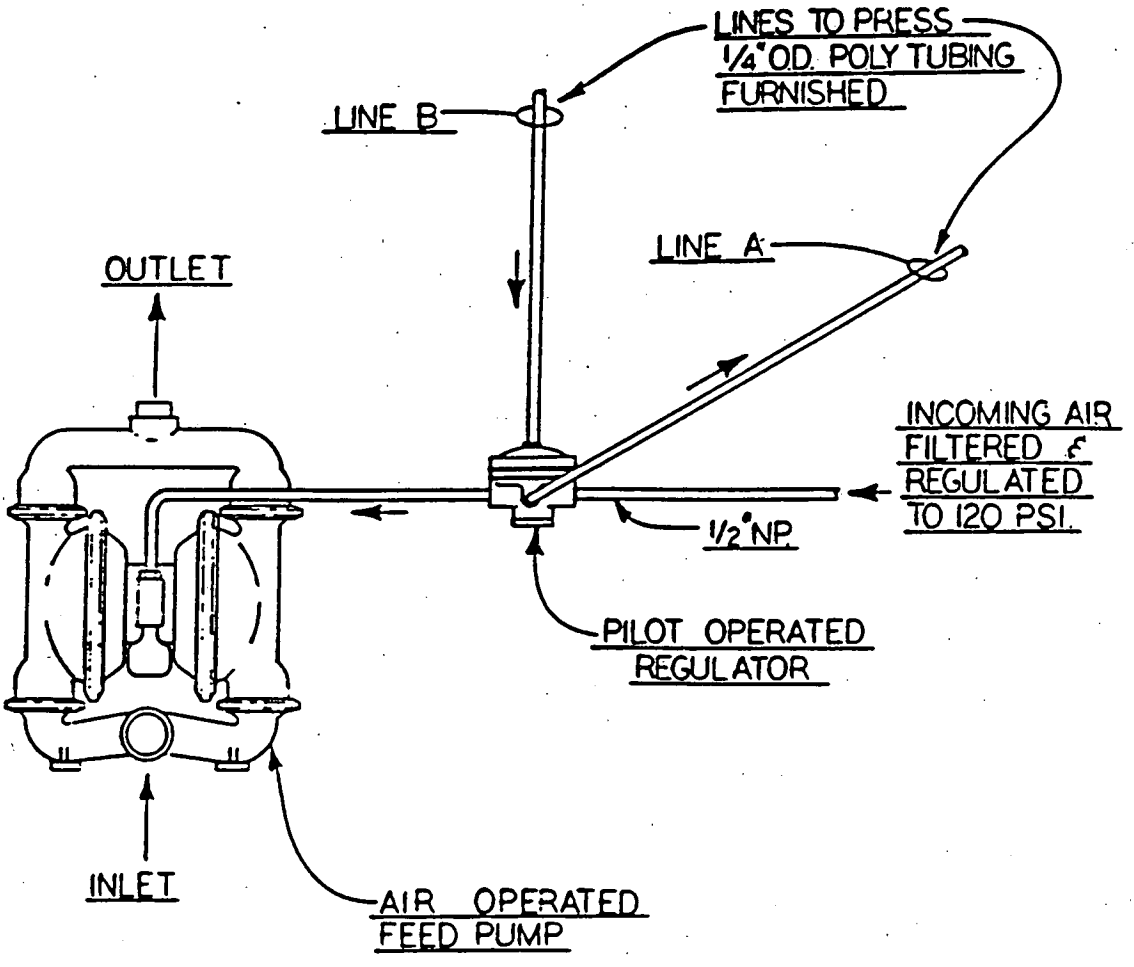

ITEM	QTY	PART NO.	DESCRIPTION	MAT'L	WT EA

SCALE ~ | DRAWN | CHECKED | REV.

DATE 11-29-83 | TITLE PILOT OPERATED REGULATOR HOOK-UP

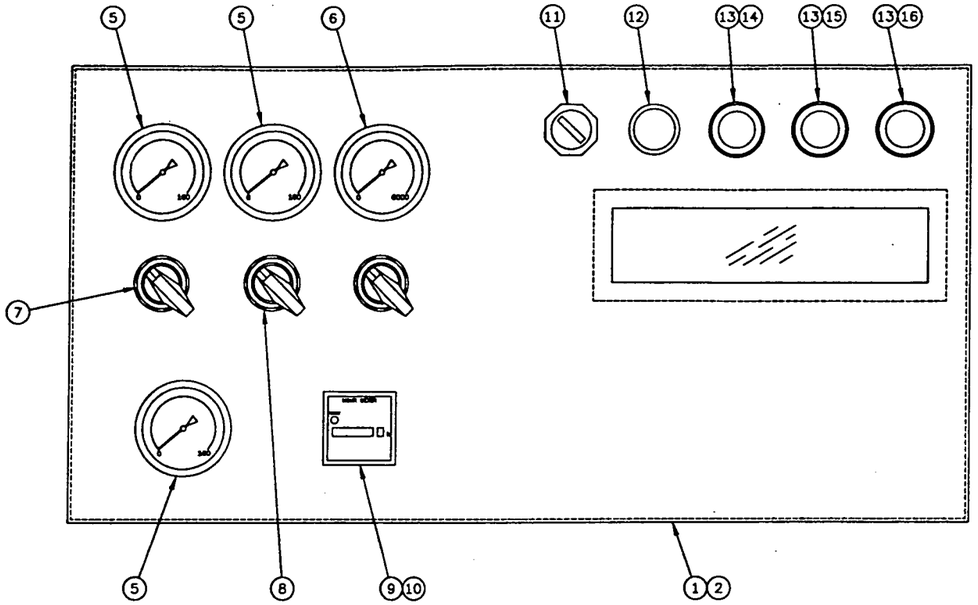

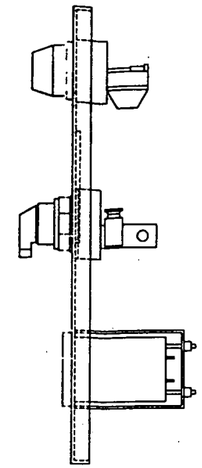

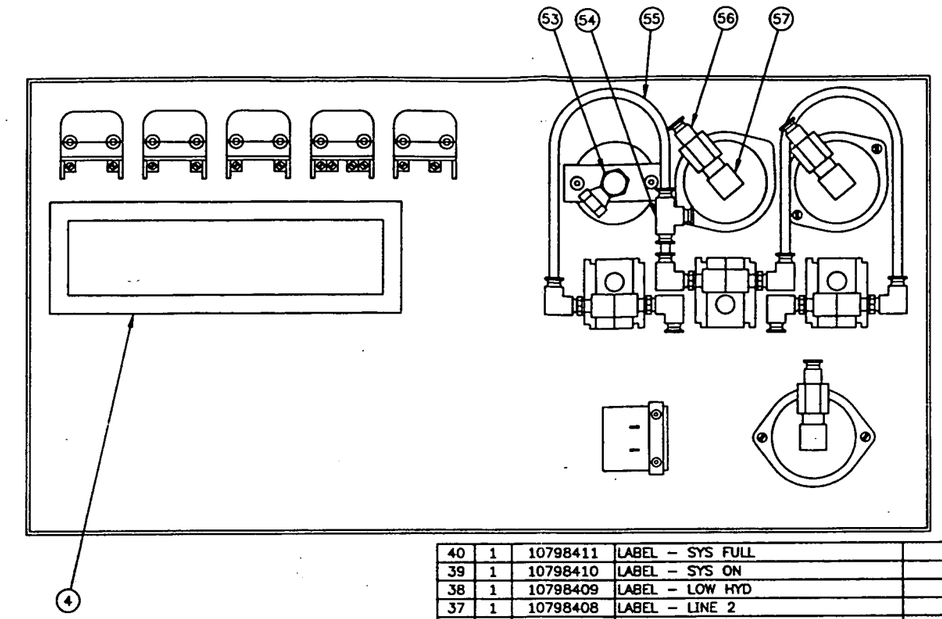

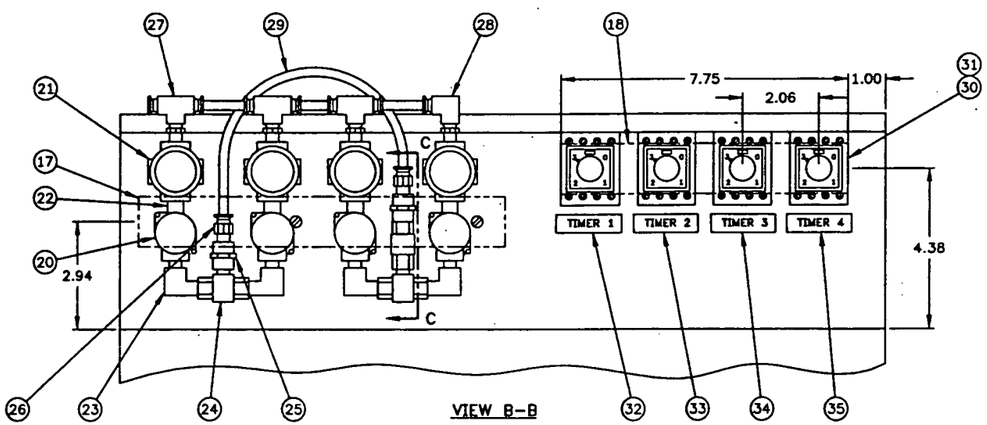

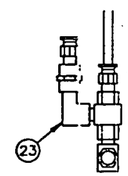

VIEW C-C

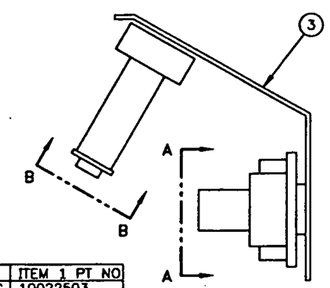

ASS'Y PART NO	DESCRIPTION	ITEM 1 PT NO
10185900	CYL BRKT MTG	10022503
10185901	LEG MTG L.H.	10022501
10185902	LEG MTG R.H.	10022502

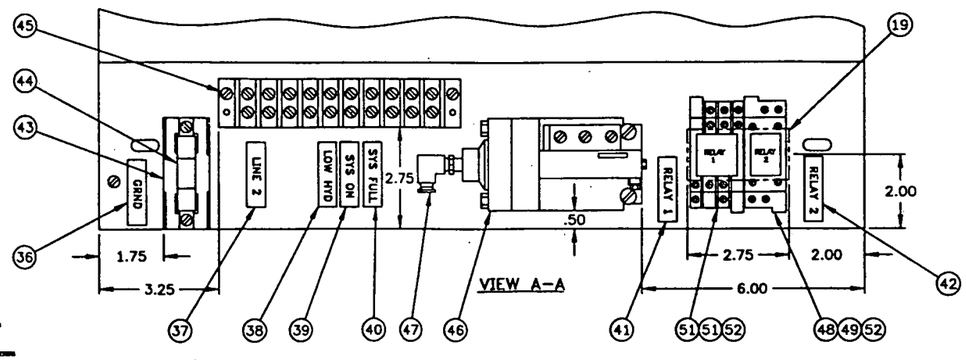

	4	10038300	WASHER FLAT .25 SS	–	–
	4	10038800	NUT HX FULL .25-20 SS	–	–
	4	10066800	SCREW PAN HD SLT .16-32 X .25	–	–
	2	100315202	SCREW SELF DRL PHLP .19 X 1.00	–	–
	5	10315201	SCREW SELF DRL PHLP .19 X .50	–	–
	6	10315200	SCREW SELF DRL PHLP .19 X .75	–	–
57	3	10020000	ELBOW STREET .25 NPT – .25 FNPT	–	–
56	3	10019200	CONNECTOR .25 NPT – .25 TUBE	–	–
55			TUBING .25 OD CLEAR	10023900	2.000
54	1	10019501	TEE .25 TUBE	–	–
53	1	10020600	ELBOW SWIVEL .25 FNPT – .25 FNPT	–	–
52	4	10022006	CLIP – RELAY	–	–
51	1	10023203	RELAY LY3	–	–
50	1	10022008	SOCKET – CONNECTING PTF11-A	–	–
49	1	10023202	RELAY LY2	–	–
48	1	10022007	SOCKET – CONNECTING PTF08A-E	–	–
47	1	10019601	ELBOW .25 NPT – .25 TUBE	–	–
46	1	10609100	SWITCH – PRESSURE	–	–
45	1	10022701	BLOCK , TERMINAL	–	–
44	1	10024400	FUSE FRN-1	–	–
43	1	10022600	FUSE BLOCK	–	–
42	1	10798402	LABEL – RELAY 2	–	–
41	1	10798401	LABEL – RELAY 1	–	–

40	1	10798411	LABEL – SYS FULL	–	–
39	1	10798410	LABEL – SYS ON	–	–
38	1	10798409	LABEL – LOW HYD	–	–
37	1	10798408	LABEL – LINE 2	–	–
36	1	10798407	LABEL – GRND	–	–
35	1	10798406	LABEL – TIMER 4	–	–
34	1	10798405	LABEL – TIMER 3	–	–
33	1	10798404	LABLE – TIMER 2	–	–
32	1	10798403	LABLE – TIMER 1	–	–
31	4	10936101	TIMER ATC	–	–
30	4	10022000	SOCKET , CONNECTING	–	–
29			TUBING .25 OD RED	10023902	6.000
28	1	10019602	ELBOW .12 NPT – .25 TUBE	–	–
27	3	10019900	TEE .12 NPT – .25 TUBE	–	–
26	3	10019401	CONNECTOR .12 NPT – .25 TUBE	–	–
25	2	10020300	COUPLING .12	–	–
24	3	10023500	VALVE SHUTTLE	–	–
23	5	10020002	ELBOW 90 STREET .12	–	–
22	8	10020100	NIPPLE .125 X CLOSE	–	–
21	4	10024701	REGULATOR	–	–
20	4	10023300	VALVE – SOL.	–	–
19	1		TRACK PHOENIX (36") 2.75"	10140600	.0763
18	1		TRACK PHOENIX (36") 7.75"	10140600	.2152
17	1		TRACK PHOENIX (36") 10"	10140600	.2777
16	1	10241302	LENS CAP – RED	–	–
15	1	10241304	LENS CAP – AMB	–	–
14	1	10241303	LENS CAP – GRN	–	–
13	3	10022301	LIGHT PILOT , BASE	–	–
12	1	10022200	SWITCH – GRN PUSH BUTTON	–	–
11	1	10022100	SWITCH 2-POS	–	–
10	1	10593500	TIMER MOUNT FRAME	–	–
9	1	10023000	TIMER ATC	–	–
8	1	10041800	VALVE CONTROL ASS'Y 41P	–	–
7	2	10041900	VALVE CONTROL ASS'Y 31P	–	–
6	1	10023804	GAUGE 0-6000 PSI	–	–
5	3	10023600	GAUGE	0-160 PSI	–
4	1	10066600	PLEXIGLASS .12 X 3 X 9.5	–	–
3	1	10067300	MOUNTING PLATE	–	–
2	1	10568400	OVERLAY APCS	–	–
1	1	SEE TABLE	ENCLOSURE	–	–

ITEM	QTY.	PART NO.	DESCRIPTION/MAT'L	RAW STOCK NO.	RAW STOCK QTY.

CHG. BY	SYM.	DESCRIPTION	E.C.N.	DATE
TWP	B	REVISED AND REDRAWN ON CAD	1865	27 APR 93

JWI INC.
2180 112TH AVENUE
HOLLAND, MI 49424
U.S.A.

SCALE: 1/2
DRAWN: TWP
CHK:
SHT. 1 OF 1
DATE: 27 APR 93
SUPERSEDES
SUPS'D BY

TITLE: APCS CABINET ASS'Y

D

DWG. NO. 10185900

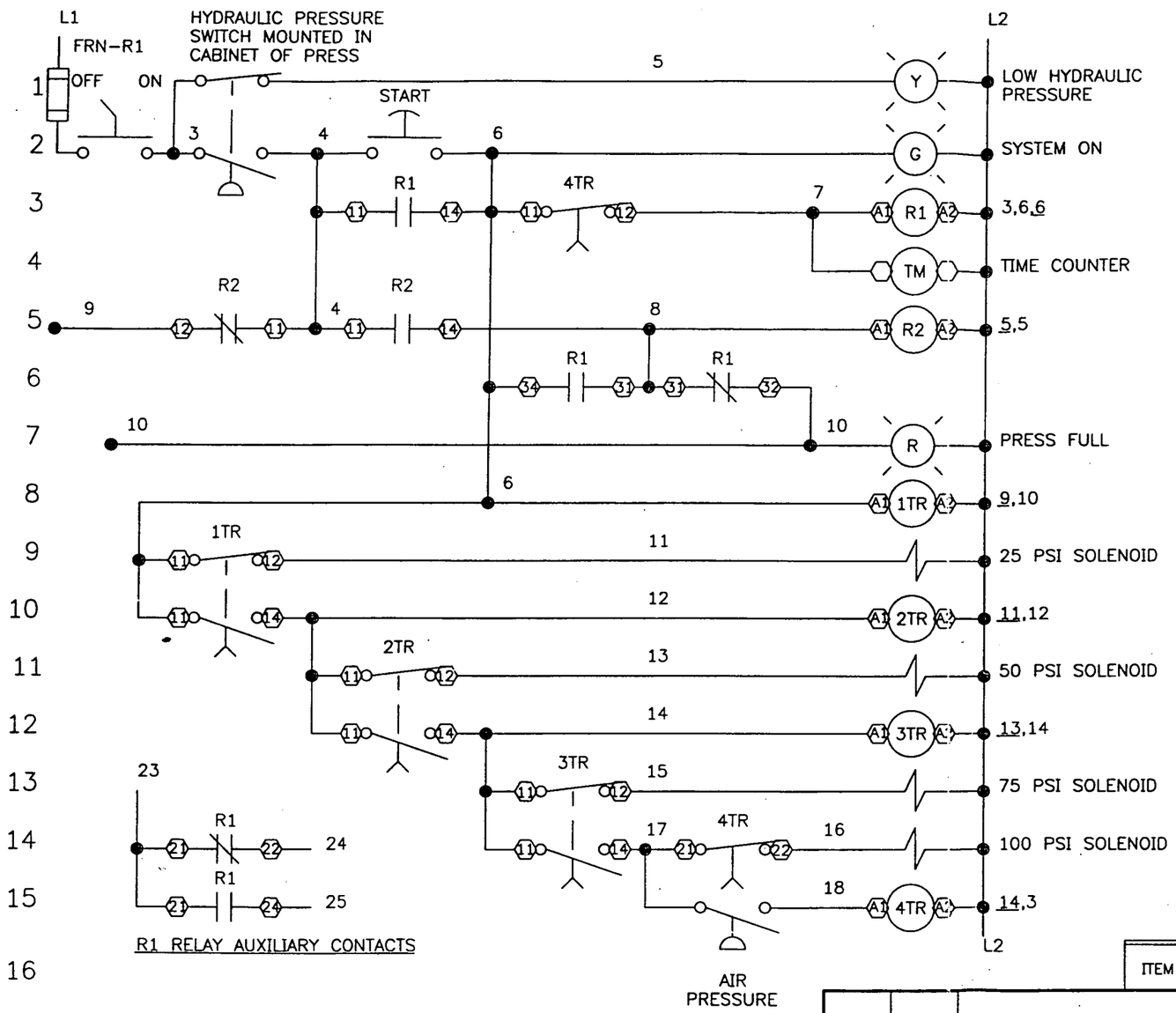

ITEM	QTY.	PART NO.	DESCRIPTION/MAT'L

CHG. BY	SYM.	DESCRIPTION	E.C.N.	DATE

ALLEN BRADLEY COMPONENTS

SCALE NONE | DRAWN JDH | CH'K | SHT. OF

DATE 08-30-90

SUPERSEDES

SUPS'D BY

TITLE AUTOMATIC PUMP CONTROL

DWG. NO. B-10692902

UNLESS OTHERWISE NOTED TOLERANCES TO BE:

FABRICATION	MACHINE
.00 ± .06	.00 ± .03
< ± 2°	.000 ± .005
	< ± 1°

DO NOT SCALE

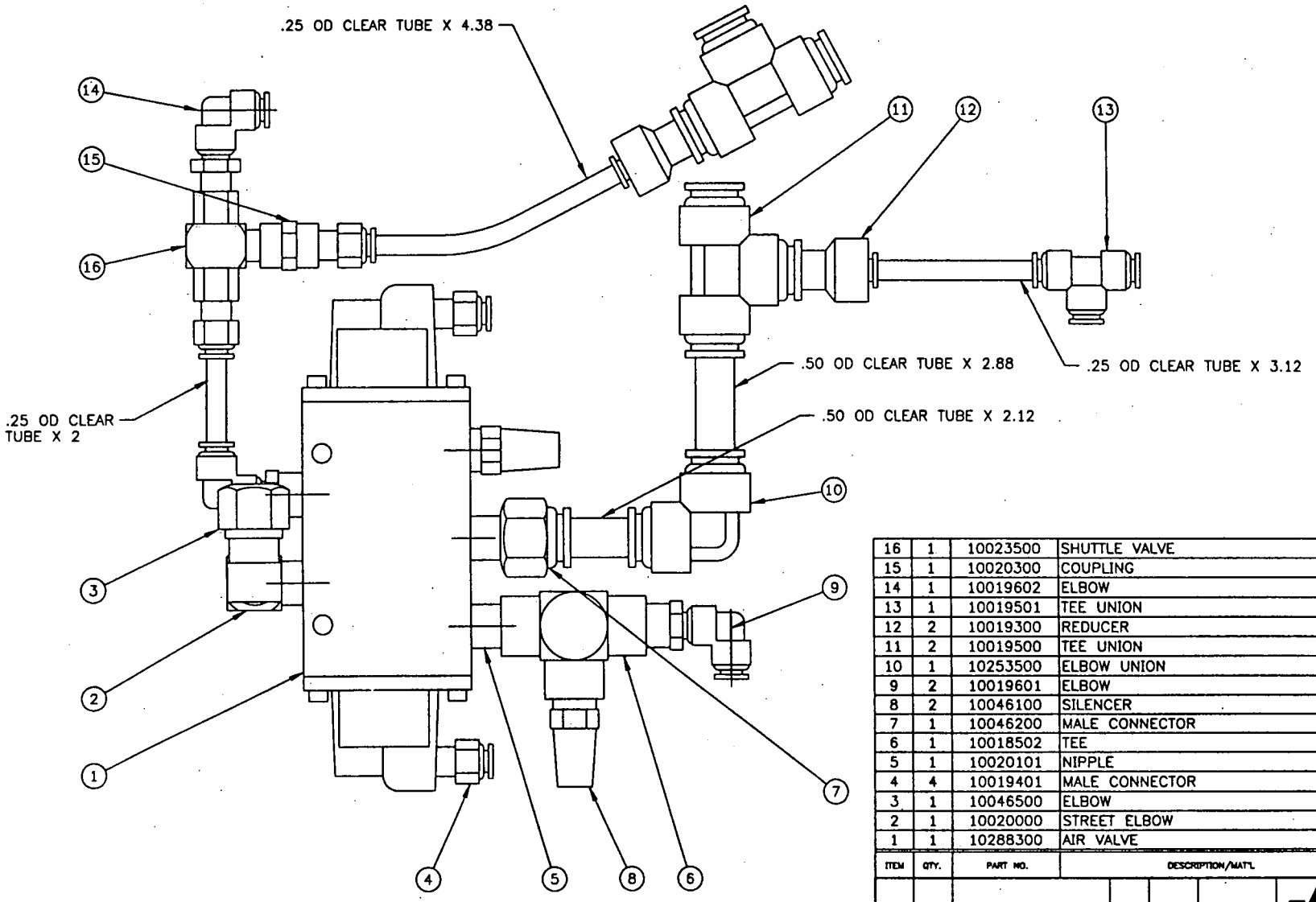

ITEM	QTY.	PART NO.	DESCRIPTION/MAT'L	RAW STOCK NO.	RAW STOCK QTY.
16	1	10023500	SHUTTLE VALVE	–	–
15	1	10020300	COUPLING	–	–
14	1	10019602	ELBOW	–	–
13	1	10019501	TEE UNION	–	–
12	2	10019300	REDUCER	–	–
11	2	10019500	TEE UNION	–	–
10	1	10253500	ELBOW UNION	–	–
9	2	10019601	ELBOW	–	–
8	2	10046100	SILENCER	–	–
7	1	10046200	MALE CONNECTOR	–	–
6	1	10018502	TEE	–	–
5	1	10020101	NIPPLE	–	–
4	4	10019401	MALE CONNECTOR	–	–
3	1	10046500	ELBOW	–	–
2	1	10020000	STREET ELBOW	–	–
1	1	10288300	AIR VALVE	–	–

ASS'Y PART NO	DESCRIPTION
10288200	R.H. AS SHOWN
10288201	L.H. PUT ITEM 3 ON OPP. SIDE OF ITEM 2

UNLESS OTHERWISE NOTED TOLERANCES TO BE:
FRACTIONS ± .XX ± .03 ± .XXX ± .005 ± 1/2° ± 1/4° ± 1/8° ± 1/16°
DIMENSIONS IN [ ] ARE MILLIMETERS
DO NOT SCALE DRAWING

CHG. BY	SYM.	DESCRIPTION	E.C.N.	DATE
TWP	B	REDRAWN ON CAD	0000	26 APR 93

JWI INC.
2155 112TH AVENUE
HOLLAND, MI 49424
U.S.A.

SCALE 1:1
DATE 09 MAY 94
SUPERSEDES
SUPS'D BY
DRAWN TWP
CH'K
SHT. 1 OF 1
TITLE AIR VALVE ASS'Y
C
DWG. NO. 10288200

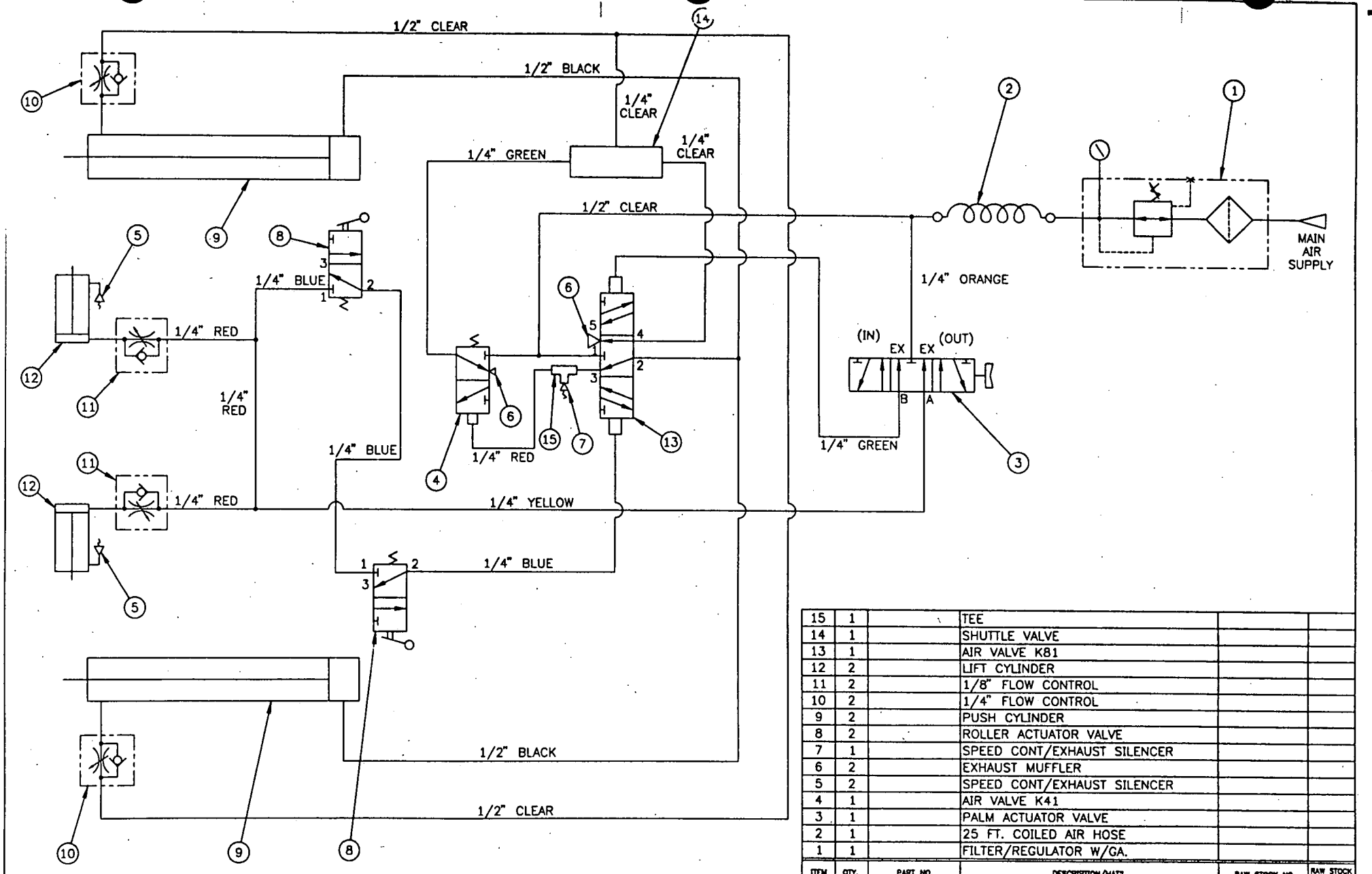

ITEM	QTY.	PART NO.	DESCRIPTION/MAT'L	RAW STOCK NO.	RAW STOCK QTY.
15	1		TEE		
14	1		SHUTTLE VALVE		
13	1		AIR VALVE K81		
12	2		LIFT CYLINDER		
11	2		1/8" FLOW CONTROL		
10	2		1/4" FLOW CONTROL		
9	2		PUSH CYLINDER		
8	2		ROLLER ACTUATOR VALVE		
7	1		SPEED CONT/EXHAUST SILENCER		
6	2		EXHAUST MUFFLER		
5	2		SPEED CONT/EXHAUST SILENCER		
4	1		AIR VALVE K41		
3	1		PALM ACTUATOR VALVE		
2	1		25 FT. COILED AIR HOSE		
1	1		FILTER/REGULATOR W/GA.		

NOTE:
AIR LINES USED ARE POLYETHYLENE TUBING

UNLESS OTHERWISE NOTED TOLERANCES TO BE:
FABRICATION .XX ± .08 [X ± 2] .XX ± .03 [X ± .1] .XX ± .005 [X ± 1] [X ± .1] .X ± .1
DIMENSIONS IN [ ] ARE MILLIMETERS
DO NOT SCALE DRAWING

CHG. BY	SYM.	DESCRIPTION	E.C.N.	DATE

JWI INC. 2155 112TH AVENUE HOLLAND, MI 49424 U.S.A.

SCALE NONE | DRAWN MJR | CH'K | SHT. 1 OF 1
DATE 28 MAR 94
SUPERSEDES
SUPS'D BY

TITLE SHIFTER AIR SCHEMATIC

C | DWG. NO. 10238900

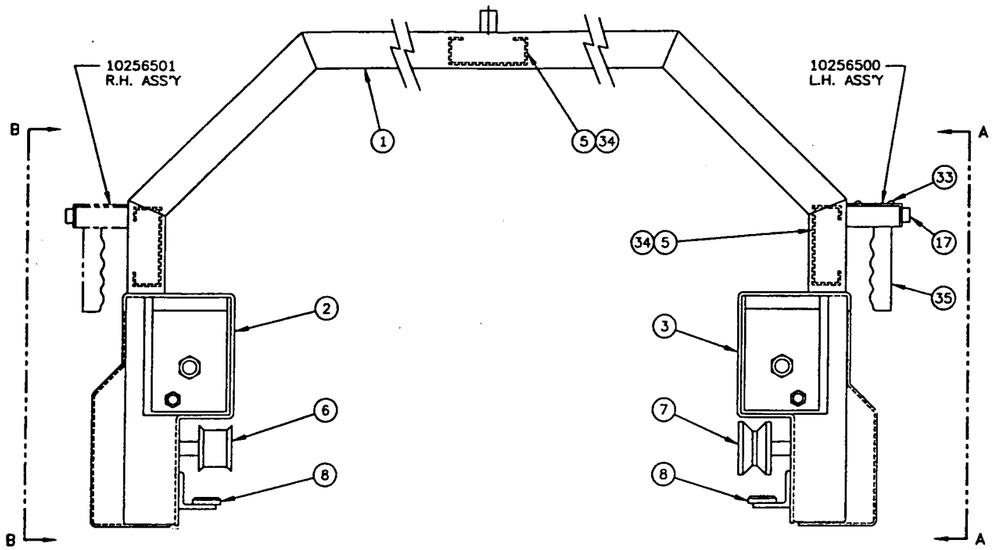

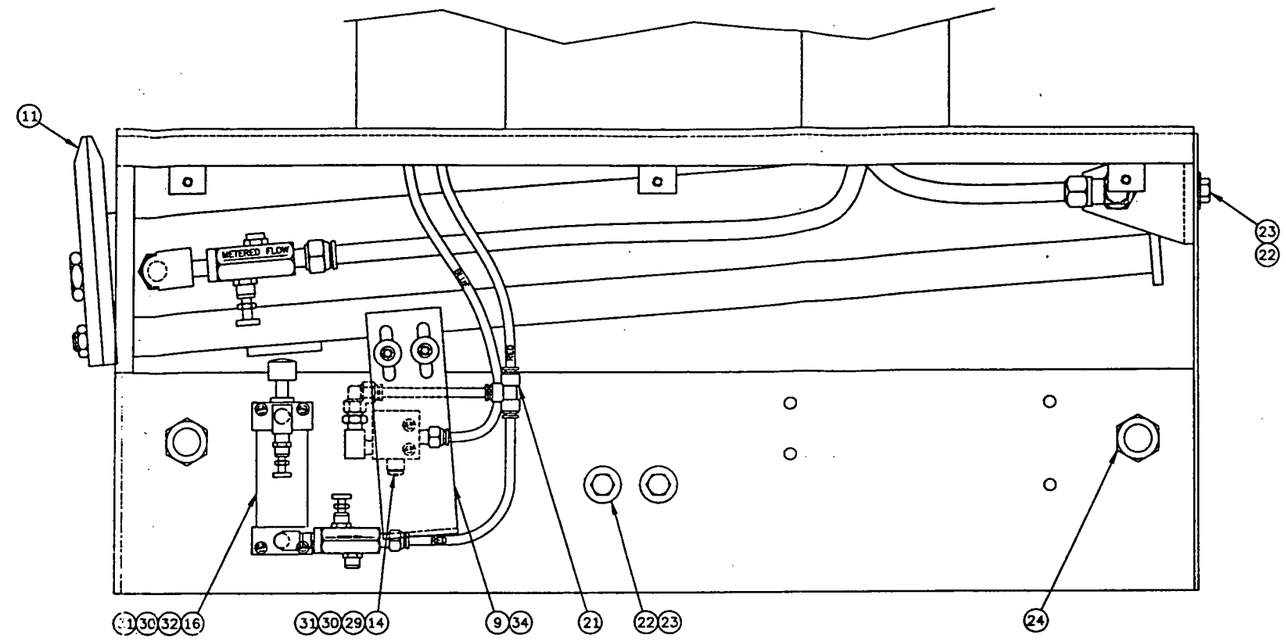

VIEW A-A

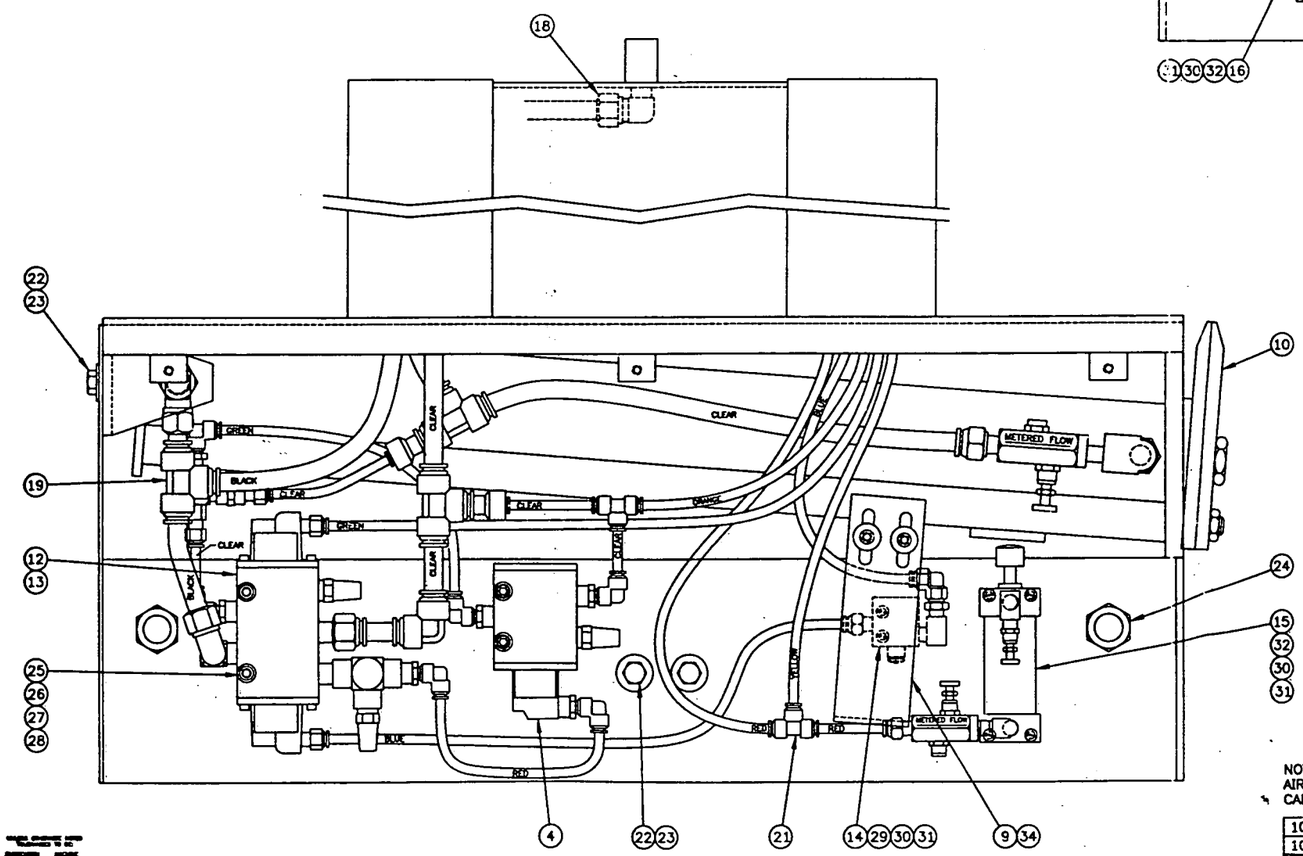

VIEW B-B

NOTE:
AIR VALVES TO ASSEMBLED IN
CABINET OPPOSITE CONTROL BUTTON.

10256501	RIGHT HAND ASSEMBLY	0	1
10256500	LEFT HAND ASSEMBLY	1	0
ASS'Y PART NO.	DESCRIPTION	ITEM 12 QTY.	ITEM 13 QTY.

ITEM	QTY.	PART NO.	DESCRIPTION/MAT'L	RAW STOCK NO.	RAW STOCK QTY.
35	1	10056500	RUBBER HANDLE GRIP		
34	18	10038200	1/4-20 X 0.50 SCREW SOC HD S.S.		
33	4	10237000	8-32 X 0.50 SCREW BUTTONHD HX		
32	4	10056600	10-32 X 2.25 SCREW ROUND HD-SLOT		
31	12	10012401	10-32 NUT		
30	12	10056700	#10 INT TOOTH LOCKWASHER		
29	4	10056601	10-32 X 1.0 SCREW ROUND HD-SLOT		
28	4	10038800	1/4-20 SS NUT		
27	4	10038107	1/4 SS LOCKWASHER		
26	4	10038300	1/4 SS FLATWASHER		
25	4	10038201	1/4-20 X 2.0 SS SOC HD CAP SCREW		
24	4	10047702	3/4"-10 SS JAMNUT		
23	8	10038301	3/8 SS FLATWASHER		
22	8	10039700	3/8-24 X 0.75 HEX BOLT		
21	2	10019501	UNION TEE 1/4"		
20					
19	1	10019500	UNION TEE 1/2"		
18	1	10020500	1/2" MALE ELBOW		
17	1	10237100	SHIFTER VALVE SUB-ASS'Y		
16	1	10288600	LIFT CYL SUB-ASS'Y L.H.		
15	1	10288601	LIFT CYL SUB-ASS'Y R.H.		
14	2	10253400	VALVE SUB-ASS'Y		
13	-	10288201	L.H. VALVE SUB-ASS'Y		
12	-	10288200	R.H. VALVE SUB-ASS'Y		
11	1	10253901	CYLINDER ASS'Y-L.H.		
10	1	10253801	CYLINDER ASS'Y-R.H.		
9	2	10051600	LIMIT SWITCH TRIP ARM		
8	2	10054500	CARRIAGE STOP SUPPORT		
7	2	10049200	ROLLER SUB-ASS'Y		
6	2	10049300	ROLLER SUB-ASS'Y		
5	2	10254500	LINE COVER		
4	1	10288400	AIR VALVE ASS'Y		
3	1	10254201	L.H. CABINET ASS'Y		
2	1	10254200	R.H. CABINET ASS'Y		
1	1	10256600	ARCH SUB-ASS'Y		

DH	D	Drawn On CAD	-	30 MAR 94	
CHG. BY	SYM.	DESCRIPTION	E.C.N.	DATE	SUPS'D BY

PRESS 800mm 100psi

JWI INC. 2195 112TH AVENUE HOLLAND, MI 49424 U.S.A.

SCALE NONE | DRAWN DH | CHK | SHT. 1 OF 1

DATE 02 MAY 94

SUPERSEDES

TITLE SHIFTER ASSEMBLY

D | DWG. NO. 10256500

1	CUSTOMER SERVICE
2	SPECIFICATIONS
3	SAFETY INSTRUCTIONS
4	INSTALLATION & SETUP
5	GENERAL DESCRIPTION
6	OPERATION
7	PREVENTIVE MAINTENANCE
8	TROUBLESHOOTING
9	DRAWINGS
10	RECOMMENDED SPARE PARTS
11	MANUFACTURERS LITERATURE
12	RETURN POLICY
13	OPTIONAL EQUIPMENT

Haskel

T chnical Specifications & Performance Data

1/3 HP PUMP SERIES

M, MS, MCPV, MDSTV, 29723 models

Hand pump attachment optional for all models

1/3 HP M- or -MS series -21 through - 188 models

INTRODUCTION

This brochure should be read in conjunction with Catalog MLP-46 and the assembly drawings when supplied as part of the O/M manual with a pump.

INSTALLATION

The Haskel pump can be mounted in any position and be secured by the two mounting brackets. Alternatively, the hydraulic inlet can be directly mounted to a tank top. However, models with separation chamber construction (all MD, MCPV and 29723 models) should be mounted vertically so that any fluid leakage from the chamber vent port will not migrate into the air drive section. Pump can be mounted in a horizontal position providing the vent port is facing down. Do not pipe vent port back to fluid source.

AIR DRIVE SYSTEM

Other gases such as Nitrogen, CO_2, Natural Gas – even Sour Gas can be used as alternatives to compressed air when properly modified.

The air drive requires a minimum pressure of 25 psi (1.72 bar) to actuate the air cycling valve spool. However, 40 psi is the recommended minimum for long term reliable operation. The maximum air drive pressure is 125 psi (8.6 bar). It is not necessary or desirable to use an airline lubricator. The air drive section of all Haskel liquid pumps are prelubricated at the time of assembly with Haskel lubrication 28442. The air drive requires no other means of lubrication. Install an air line filter and pressure regulator with a minimum of 1/4" npt port size. Also review air system upstream and eliminate any restrictions to provide 1/4" minimum inside diameter. Install a shut-off/speed control valve, 1/4" npt, at pump inlet port. See top left of page 10 "Air Controls" in MLP-46 catalog for typical layout.

HYDRAULIC SYSTEM

See page 3 of the data catalog for fluid inlet/outlet port sizes.

Note: Inlet fluid supply piping should not be less than 1/4" I.D. restricting the fluid supply will result in lower outlet flow rates and cause pump to cavitate.

Larger piping should be used with heavy fluids or if suction lift is over 3 feet.

Caution: Do not loosen liquid inlet or liquid outlet fittings of pump to facilitate make up of piping connections. These fitting must be tight to avoid leakage or damage. A suction filter must be installed in liquid inlet line. 100 x 100 mesh in normally ample to protect the pump seals and check valves.

Note: See curves on page 2 and/or label on pump for safe maximum pressure ratings.

PRIMING

Install a valve of suitable working pressure to the pump outlet that is capable of being used as an air bleed to start up. Open air control valve slowly. Allow pump to cycle for approximately fifteen seconds pumping fluid through the valve. If adequately primed, close the valve. The pump will cycle slower and then stall due to increase in output resistance. If pump does not stall, open the valve and repeta the procedure.

OPERATION

The pump model number indicates the ratio between the area of the of the air piston and the liquid piston. See page 3 "Principle of Operation" in the MLP-46 catalog.

The liquid outlet pressure can be controlled quite accurately by regulating the air drive pressure. The pump will cycle rapidly initally and as it approaches an output pressure equal to the ratio times the air drive pressure, it will gradually slow down and finally "stall". (also note remarks on page 2)

Where it is necessary to obtain maximum outlet flow rates up to a predetermined pressure, a Haskel Air Pilot Switch should be installed at the pump outlet to automatically stop the pump at the final pressure. The airline regulator should be set at 125 psi (8.6 bar). A Haskel relief valve to prevent over pressurization should also be fitted as a safety precaution. See top of page 17 "Air Pilot Switch" and "Regulating Relief Valves" and page 18 of MLP-46 catalog.

Note: A hand pump attachment can be fitted (for precision control or use without compressed air power) on all models. (ref. page 10, MLP-46)

(continued on page 4)

Our products are backed by outstanding technical support, an excellent reputation for reliability, and world-wide distribution.

PUMP PERFORMANCE ALL MODELS

These curves show the capability of each model using 75, 100, and 125, psig drive pressures (intermediate pressures can be easily interpolated). Tests were run with the air pressure initially set at a **static** condition with a supply line equivalent to 1/4" schedule 40 pipe. A standard 1/4" NPT filter-regulator was installed on the pump drive.

Note: "Mini" type air regulators (as supplied with -c air c ntr ls) will reduce output fl w by about 25%.

Stall Pressure: As can be seen from the cutaway view on page 4, the drive is returned with a large coil spring. Drive force can vary up to 2 psi (equivalent) between the top and bottom of the stroke. This variance is multiplied by the area ratio at stall. Therefore, for precise test work the HP (Hand Pump modification) is recommended.

PERFORMANCE CURVES

AIR DRIVE PRESSURE (Solid curve lines) / AIR DRIVE FLOW (Dotted curve lines)

Shaded areas indicate excessive cycle rates and should be avoided except for intermittent duty.

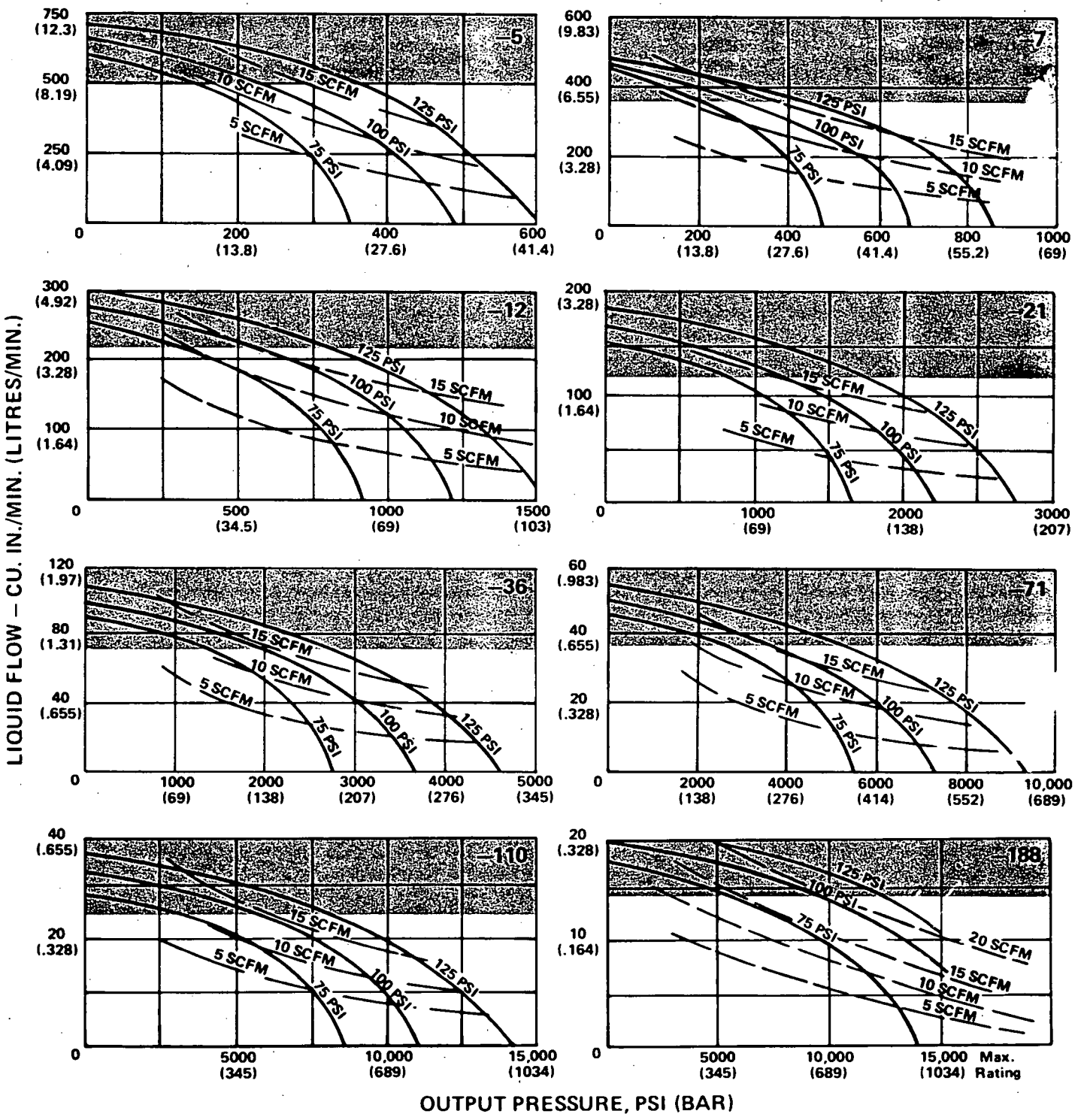

Parker
Motion & Control

Pneumatic Division
Richland, Michigan 49083

MAINTENANCE BULLETIN
FORM V-295FP
42 SERIES 3-POSITION VALVE
INLINE/STACKING
DOUBLE AIR/DOUBLE SOLENOID
SINGLE PRESSURE
ISSUED: DECEMBER, 1993
Supersedes: April, 1992

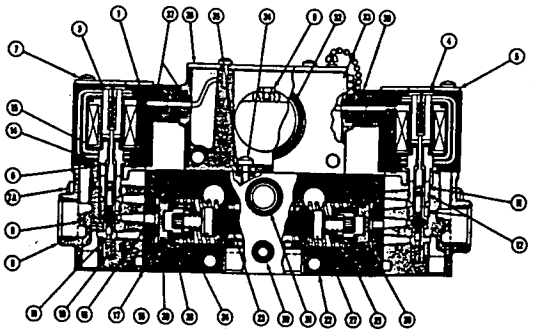

3 POSITION STACKING

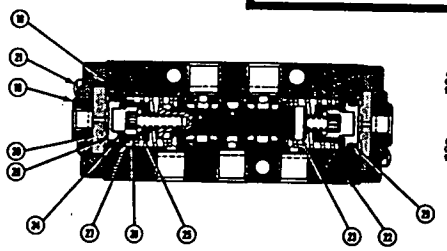

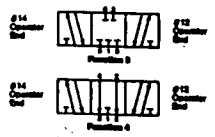

3 POSITION INLINE

VALVE BODY SERVICE KIT
CONSISTING OF ITEMS 7A, 16, 18, 21, 23, 24, 27, 29 ..... PS2009P

SOLENOID SERVICE KIT (TWO KITS REQUIRED)
CONSISTING OF ITEMS 3, 4, 6, 7, 14, 15 ..... PS2013BP

PILOT BODY SERVICE KIT (TWO KITS REQUIRED)
CONSISTING OF ITEMS 7A, 10, 11, 12, 13, 16, 18 ..... PS2015BP

ITEM NO.	DESCRIPTION	QTY.	DOUBLE SOLENOID	QTY.	DOUBLE AIR
1	Solenoid Assembly (See Chart)	2	See Chart	—	—
3	Plunger Assembly	2	Kit	—	—
4	Override Seal	2	Kit	—	—
5	Solenoid Top Plate	2	P00505B	—	—
6	Seal (Solenoid/Pilot Body)	2	Kit	—	—
7	Screws (Metric M4 x 0.7-50mm)	4	Kit	—	—
7A	Screws (Metric M4 x 0.7-50mm)	4	Kit	—	—
8	Pilot Body	2	N.S.S.	—	—
9	Ground Screw	2	K31R14025	—	—
10	Spring (Poppet Return)	2	Kit	—	—
11	Poppet Assembly	2	Kit	—	—
12	Bore Insert	2	Kit	—	—
13	Seal (Bore Insert)	4	Kit (*2-011)	—	—
14	Plunger Pin	2	Kit	—	—
15	Fixed Pole Assembly	2	Kit	—	—
16	Seal (Pilot Body/Adaptor Plate)	2	Kit	—	—
17	Adaptor Plate	2	P00569B	—	—
18	Seal (Body End Seal)	2	Kit	2	Kit
19	Remote Pilot Plate(1/8" N.P.T.)	—	—	2	P0057101
20	End Bumper	—	—	2	P00570
21	Screws (Metric M4 x 0/7-16mm)	—	—	4	Kit
22	Valve Body	1	N.S.S.	1	N.S.S.
23	Spool	1	Kit	1	Kit
24	Screw (Metric M5 x 0.8-20mm S.H.C.S.)	2	Kit	2	Kit
25	Shoulder Sleeve	2		2	
26	Spring Retainer	2		2	
27	Spring (Centering)	2	Kit	2	Kit
28	Piston	2	P00932	2	P00932
29	O-ring (Piston)	2	Kit	2	Kit
30	Seal (Valve Body)	1	*2-108	1	*2-108
31	Seal (Valve Body)	3	*2-113	3	*2-113
32	Seal (Junction Box)	1	*2-222	1	*2-222
33	Junction Box	1		1	
34	Screws (Metric M4 x 0.7-12mm)	2		2	
35	Seal (Junction Box to Body)	2		2	
36	Top Plate Assembly	1		1	
37	Seal (Spacer)	4	*2-205		
38	Spacer (Coil to Junction Box)	2	P00719		

N.S.S. - Not Sold Separately

* - Parker Seal Size

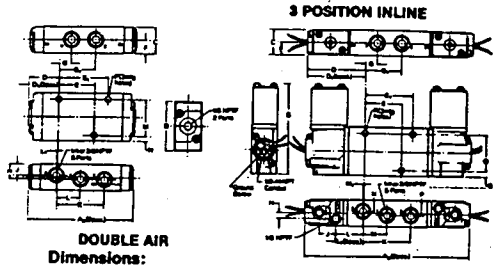

DOUBLE AIR
Dimensions:

	inches	mm
A_2	5.59	142
B	2.13	54
C	1.15	29
D	1.28	32.5
D_1	1.78	45
E	1.58	40
E_1	2.06	52.5
F	.57	14.5
G ¼" NPT	.51	13
⅜" NPT	.55	14
G_1 ¼" NPT	1.56	39.5
⅜" NPT	1.51	38
H	.64	16
J	.50	13
K ¼" NPT	2.08	53
⅜" NPT	2.13	54
L	1.03	26

DOUBLE SOLENOID
Dimensions:

	inches	mm
A_2	8.25	210
B	3.97	101
C	1.15	29
D	2.62	66.5
D_1	3.08	78
E	1.58	40
E_1	2.06	52
F	.57	14.5
G ¼" NPT	.51	13
⅜" NPT	.55	14

L_1 ¼" NPT	.02	.5
⅜" NPT	.06	1.5
M	1.58	40
N	.27	7
P	.33	8.5

G_1 ¼" NPT	1.56	39.5
⅜" NPT	1.51	38
H	.25	6
J	.75	19
K ¼" NPT	2.08	53
⅜" NPT	2.13	54
L_1	1.71	43
M ¼" NPT	1.03	26
⅜" NPT	1.03	26
M_1 ¼" NPT	.02	.5
⅜" NPT	.06	1.5
N	.50	13
P	.64	16
Q	1.58	40
R	.33	8.5
S	.27	8

Dimensions:

	inches	mm
A	4.55	116
B	3.19	81
C	1.62	41
D	1.31	33
D_1	1.47	37
E	.47	12
F	.38	10
G	1.50	27
H	2.10	53
J	1.07	27
K	2.13	54
M	2.78	71
M_1	4.13	105
N	5.20	132
P	2.60	66
Q	4.25	108
R	2.12	54
S	1.05	27
T	.53	13
U	.50	13
V	.64	16
W	.84	21
X	1.14	29
Y	.42	11
Z	.57	14
Z_1	2.78	71
Z_2	5.55	141
Z_3	2.74	70
Z_4	3.49	89
Z_5	4.13	105
Z_6	8.25	210
Z_7	.27	7

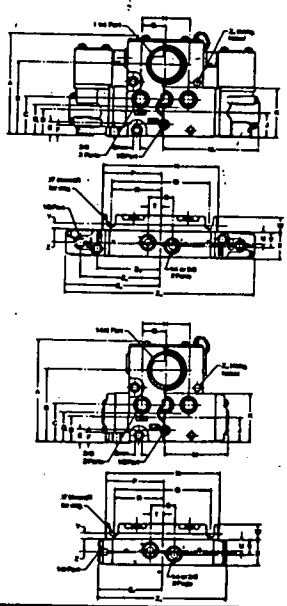

COIL SELECTION:

Voltage/Frequency 60Hz. AC	50 Hz. AC	DC	Standard Lead Wire Type-Inline	Standard Lead Wire Type-Stacking	*ISO 4400 3-Pin Connector Type
24V	22V		L0051442CP	L0071812CP	L0058172CP
		12V	L0051445CP	L0071815CP	L0058175CP
		24V	L0051449CP	L0071819CP	L0058179CP
120V	110V		L0051453CP	L0071823CP	L0058183CP
240V	220V		L0051457CP	L0071827CP	L0058187CP
		120V	L0051460CP	L0071830CP	L0058190CP

*NOTE: Female connector, gasket and M3 mounting screw for ISO 4400 3-Pin Connector Type Solenoid must be ordered separately (PS2028BP). For Indicator Light order PO074023.

OPERATING TEMPERATURE & PRESSURE:
Ambient operating temperature, 0°F to 160°F (-18°C to 71°C).
Operating pressure, 40 to 150 PSIG (2.8 to 10 bar).

INSTALLATION

1. Valve will mount in any position.
2. Detailed piping and mounting dimensions are shown.
3. Solenoid voltage ratings are described on the nameplate. Your electrical power source must agree with this rating. The coil identification chart indicates the various voltages and hertz ratings available.
4. Check model number on valve against valve model chart. On a single pressure, dual exhaust model: For inline valves; pipe the supply pressure to port "1." For stacking valves; pipe the supply pressure to the "IN" port.
5. Cylinder speed can be controlled by restricting the exhaust port(s) of the valve with flow controls.
   CAUTION: DO NOT CLOSE OFF EXHAUST PORTS.
6. Pilot pressure, when separately supplied, should be approximately equal to inlet pressure but not less than 40 PSIG (2.8 bar), nor more than 150 PSIG (10 bar).
7. To obtain maximum valve life with a minimum of maintenance, it is necessary that filtered and lubricated air be used.

MAINTENANCE HINTS & TROUBLESHOOTING

VALVE NOT SHIFTING COMPLETELY:

1. Be sure supply pressure is 40 PSIG or greater at the valve during the shift.
2. Check for possible restrictions in air supply, such as sharp bends and undersize hose fittings.
3. Check for possible pilot exhaust restriction.
4. Check spool for smooth movement.
5. Check seals and gaskets for improper installation, dirt and damage.

SLOW AIR LEAKAGE THROUGH EXAUST PORTS:

1. Check for internal leakage in the cylinder being operated by the valve.
2. Check condition of seals on spool and the valve body bore.
3. Check condition of seal on poppet assembly and their mating surfaces in the pilot body.
4. Check for missing, damaged or incorrectly assembled seals and o-rings.

NOISY SOLENOID:

1. Check voltage and frequency.
2. Inspect fixed pole assembly for nicked and damaged mating surfaces and dirt. Replace parts, if damaged.
3. Check override access area for excessive dirt.

VALVE SERVICE PROCEDURES:

CAUTION: Always shut off air supply and bleed off trapped pressure in the valve. For solenoid operated valves, turn off electrical power source.

PREPARATION: Lightly lubricate all rubber soft goods (o-rings, gaskets, and spool seals) found in the service kits. Use a non-detergent hydrocarbon base oil, or grease (preferably grease). This lubrication will help retain seals and gaskets in position for easier reassembly.

CAUTION: Do not use synthetic oils such as esters or fire retardant type compressor oils.

SERVICING VALVE BODY:

TO DISASSEMBLE:

1. For "Stacking" solenoid operated valves: Follow steps 1 and 2 under servicing solenoid section and pilot body.
2. For "Inline" solenoid operated valves: Follow step no. 2 under servicing solenoid section and pilot body.
3. Air pilot valve: Remove both air pilot operators (item 19) from valve body by loosening the two end mounting screws (item 21).
4. Remove the piston (item 28) from each end of valve body bore.
5. To disassemble the main valve, loosen the two spool screws, and remove all internal parts.
   CAUTION: Slowly loosen the two spool screws to avoid a rapid release of the spool screw, shoulder sleeve, and spring retainer, due to the compression of centering springs.
6. The spring retainer and shoulder sleeve at the opposite end of the spools must also be removed.
7. Thoroughly clean the valve interior, and inspect for nicks, voids, pits, and deep scratches.

TO REASSEMBLE:

1. Place shoulder sleeve (item 25) inside spring retainer (item 26). Insert spool screw (item 24) and attach to the spool (item 23) with engagement of two (2) full threads.
2. Slide one (1) centering spring (item 27) over the spool and install into the valve body bore.
3. On the opposite end of the valve, install the remaining centering spring, shoulder sleeve, spring retainer and spool screw.
   NOTE: Tighten spool screws to 45-60 inch-pounds torque.
4. Replace piston o-rings (item 29) and install into each end of valve body bore with the flat surface outward.
5. Solenoid operated valve: Insert mounting screws (item 7A) into pilot body. This will assist you in positioning the pilot body to adaptor gasket (item 16), the adaptor plate (item 17), and adaptor plate to body gasket (item 18) for easier mounting to valve body. (For stacking valves, thread the solenoid lead wires through the spacer and into the junction box).
   NOTE: All four (4) parts must have correct alignment in relationship with the pilot hole in valve body.
6. Attach the pilot body and solenoid assembly to the valve body and tighten the mounting screws to 30-40 inch-pounds torque. (For stacking valves, reconnect solenoid coil lead wires, attach junction box top plate assembly (item 36), and tighten the mounting screws to 30-40 inch-pounds torque.)
7. Air pilot valve: Attach air pilot operators (item 19) to the valve body with mounting screws (item 21) and tighten to 30-40 inch-pounds torque.
8. Turn on air supply (for solenoid operated valves, turn on electrical power source) check valve for proper function, and for external and internal air leakage.

SERVICING SOLENOID SECTION:

1. For stacking valves: Remove junction box top plate assembly (item 36) by loosening the two (2) mounting screws, and disconnect the lead wires in the junction box.
   NOTE: Do not disconnect lead wires by cutting.
2. Remove pilot body and solenoid as an assembly by loosening the two (2) end mounting screws (item 7A)
3. Remove solenoid coil by loosening the two (2) top mounting screws (item 7) and lifting solenoid from pilot body. Remove guide sleeve (item 2), plunger assembly (item 3), override seal (item 4), solenoid coil to pilot body seal (item 6), and mounting screws (item 7A).
   NOTE: Do not discard above parts if replacing solenoid coil only.
4. Remove fixed pole assembly (item 15), by turning counter-clockwise until threads are fully disengaged, and plunger pin (item 14).
5. Replace plunger pin (item 14) and reassemble fixed pole assembly (item 15) to pilot body by turning clockwise and tighten to 30-40 inch-pounds torque.
   CAUTION: Do not exceed torque specifications. This could cause severe damage to the pilot body poppet seating ledge, and result in valve malfunction.
6. Replace solenoid to pilot body seal (item 6), guide sleeve (item 2), by resting on fixed pole assembly, and plunger assembly (item 3) by setting inside guide sleeve.
7. Mount solenoid coil over guide sleeve. Replace override seal (item 4), attach solenoid top plate (item 5) with the top mounting screws (item 7), and tighten to 30-40 inch-pound torque.
8. Insert end mounting screws (item 7A) into pilot body. Position pilot body to adaptor plate gasket (item 16), the adaptor plate (item 17), and adaptor plate to valve body gasket (item 18). For stacking valves, thread the solenoid coil lead wires through the sleeve and into the junction box.
   NOTE: All four (4) parts must have correct alignment in relationship with the pilot hole in valve body.
9. Attach the pilot body and solenoid assembly to the valve body and tighten the end mounting screws to 30-40 inch-pounds torque. For stacking valves, reconnect solenoid coil lead wires, attach junction box top plate assembly (item 36), and tighten the mounting screws to 30-40 inch-pounds torque.

SERVICING PILOT BODY:

1. For stacking valves: Follow steps 1, 2, and 3 under servicing solenoid section.
2. For inline valves follow steps 2 and 3 under servicing solenoid section.
3. Remove fixed pole assembly (item 15) by turning counter-clockwise until threads are fully disengaged. Remove plunger pin (item 14), bore insert (item 12) poppet assembly (item 11) and poppet return spring (item 10).
4. Thoroughly clean the pilot body interior and inspect for nicks, voids, pits, and deep scratches.
5. Install poppet return spring (item 10). Assemble bore insert seals (item 13) to bore insert (item 12). Assemble poppet assembly (item 15) into bore insert. Position poppet assembly with seal at top as shown on opposite side. Failure to do so can cause plunger to be propelled from unit when air is applied. Install with poppet assembly, seating against the poppet return spring.
6. Install plunger pin (item 14) and reassemble fixed pole assembly (item 15) to pilot body by turning clockwise and tighten to 30-40 inch-pounds torque.
   CAUTION: Do not exceed torque specifications. This could cause severe damage to the pilot body poppet seating ledge, and result in valve malfunction.
7. Before attaching solenoid coil, suggest inspecting the guide sleeve (item 2) for excessive wear, and the plunger assembly (item 3) for battered and flared metal condition. If items appear in this described condition, they should be replaced.
8. If conditions are not noted, place guide sleeve over fixed pole assembly, and plunger assembly inside guide sleeve. Mount solenoid coil over guide sleeve and tighten to pilot body to 30-40 inch-pounds torque.
9. Insert end mounting screws (item 7A) into pilot body. Position pilot body to adaptor plate gasket (item 16), the adaptor plate (item 17), and adaptor plate to valve body gasket (item 18) for easier mounting to valve body. For stacking valves, thread the solenoid coil lead wires through the spacer (item 38) and into the junction box.
   NOTE: All four (4) parts must have correct alignment in relationship with the pilot hole in valve body.
10. Attach pilot body and solenoid assembly to valve body and tighten the end mounting screws to 30-40 inch-pounds torque. For stacking valves, reconnect solenoid coil lead wires and attach junction box top plate assembly (item 36). Tighten the mounting screws to 30-40 inch-pounds torque.

FILTER

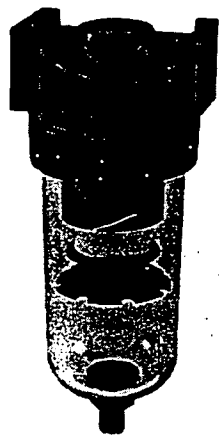

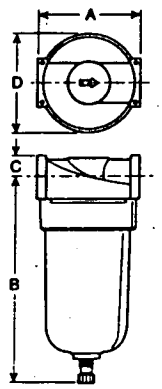

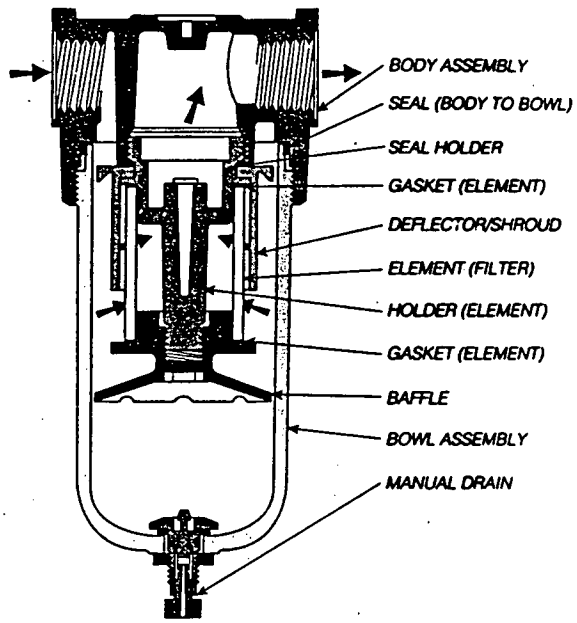

DIMENSIONS

Model	Port Size	A	B	B (with Auto Drain)	C	D
06F	1/4"-3/8"	2.75	5.77	5.65	.60	2.64
		70mm	147mm	144mm	15mm	67mm
07F	3/8"-1/2"-3/4"	3.24	7.08	6.96	.73	3.03
		82mm	180mm	177mm	19mm	77mm
08F	3/4"-1"-1 1/4"-1 1/2"	5.00	9.38	9.26	1.18	4.84
		127mm	238mm	235mm	30mm	123mm

FILTER MODELS	06F	07F	08F
ELEMENT KIT 40 MICROMETER (1) ELEMENT (FILTER) (2) GASKET (ELEMENT) (1) BAFFLE (1) SHROUD (1) DEFLECTOR (1) SEAL (HOLDER) (1) SEAL (BODY TO BOWL)	PS101P	PS201P	PS301BP
ELEMENT CARTRIDGE KIT, 40 MICROMETER (1) HOLDER (ELEMENT) (1) ELEMENT (FILTER) (2) GASKET (ELEMENT) (1) BAFFLE (1) SHROUD (1) DEFLECTOR (1) SEAL (HOLDER) (1) SEAL (BODY TO BOWL)	PS104P	PS204P	PS304CP
POLYCARBONATE BOWL KIT (1) POLYCARBONATE BOWL WITH MANUAL DRAIN (METAL BOWL 08F) (1) SEAL (BODY TO BOWL)	PS166P	PS266P	PS369P

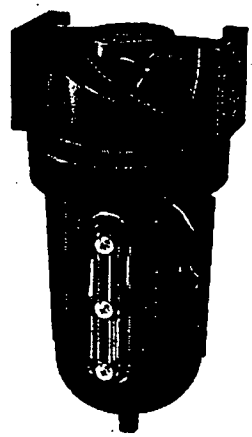

08F

MAXIMUM PRESSURE AND TEMPERATURE

150 psig @125°F (10 bar @ 52°C) with Polycarbonate Bowl
250 psig @175°F (17 bar @ 80°C) with Metal Bowl
10 psig minimum (0.68 bar) with Automatic Drain

Conversion 1 Bar = 14.5 psi, °C = 5/9 (°F -32)

ACCESSORIES CHART

Accessories listed below are available in complete Filter units.

FILTER MODELS	06F	07F	08F
Automatic drain	PS506P		
Polycarbonate bowl with automatic drain kit	PS143P	PS243P	N/A
25 Micrometer element kit	PS102P	PS202P	PS302BP
5 Micrometer element kit	PS103P	PS203P	PS303BP
Bowl guard kit	PS107P	PS207P	N/A
Metal bowl without sight glass automatic drain kit	PS148P	PS248P	PS348BP
Metal bowl with sight glass (Manual Drain)	PS169P	PS269P	PS369P
Mounting bracket kit*	PS109P	PS209P	PS309P

* Not supplied with units, must be ordered separately.

INSTALLATION

1. The equipment to which the filter is attached should be internally cleaned to remove all traces of accumulated oil and dirt. Also, new pipe or hose should be installed between the filter and equipment being protected.
2. Blow all upstream pipe work clear of accumulated dirt and liquids.
3. Select a filter location as close as possible to the equipment being protected and upstream of any pressure regulator.
4. Install filter so that air flows in the direction of arrow on cover.
5. Install filter vertically with the bowl drain mechanism at the bottom. Both free moisture and solids will thus drain into the sump (quiet zone) at the bottom of the bowl (automatic drain models are recommended as standard equipment).

OPERATION & SERVICE

1. Both free moisture and solids are removed automatically by the filter. There are no moving parts.
2. Manual drain filters must be drained regularly before the separated moisture and oil reaches the bottom of the lower baffle. Automatic drain models will collect and dump liquids automatically.
3. The filter element should be removed and replaced when the pressure differential across the filter unit is excessive.
4. **To remove the filter element: SHUT OFF AIR SUPPLY and depressurize the unit.**
   a. Unscrew threaded bowl.
   b. Unscrew lower baffle and remove filter element and gaskets (2).
   c. Clean all internal parts, bowl and element before reassembling. See polycarbonate bowl cleaning section.
   d. Install element and gaskets (2).
   e. Attach lower baffle and tighten firmly.
   f. Replace bowl seal; lubricate seal to assist in retaining it in position. Use only mineral base oils or grease. Do NOT use synthetic oils such as esters and do NOT use silicones.
   g. Screw bowl into body.

SAFETY: TRANSPARENT BOWLS

CAUTION:

Polycarbonate bowls, being transparent and tough, are ideal for use with Filters and Lubricators. They are suitable for use in normal industrial environments, but should not be located in areas where they could be subjected to direct sunlight, an impact blow, nor temperatures outside of the rated range. As with most plastics, some chemicals can cause damage. Polycarbonate bowls should not be exposed to chlorinated hydro-carbons, ketones, esters and certain alcohols. They should not be used in air systems where compressors are lubricated with fire-resistant fluids such as phosphate ester and di-ester types.

Metal bowls are recommended where ambient and/or media conditions are not compatible with polycarbonate bowls. Metal bowls resist the action of most such solvents, but should not be used where strong acids or bases are present or in salt laden atmospheres. Consult the factory for specific recommendations where these conditions exist.

TO CLEAN POLYCARBONATE BOWLS USE MILD SOAP AND WATER ONLY! DO NOT use cleansing agents such as acetone, benzene, carbon tetrachloride, gasoline, toluene, etc., which are damaging to this plastic.

Bowl guards are recommended for added protection of polycarbonate bowls wher chemical attack may occasionally occur.

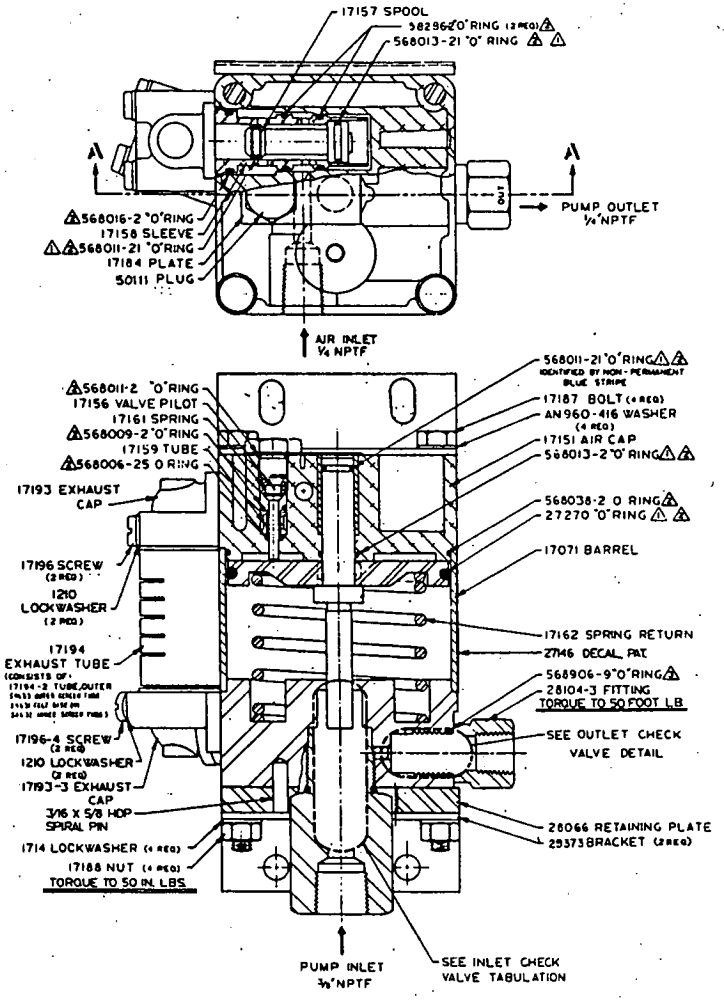

CROSS SECTION A-A

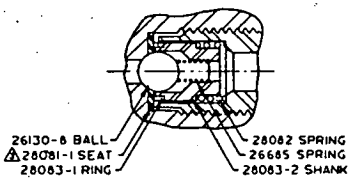

OUTLET CHECK VALVE

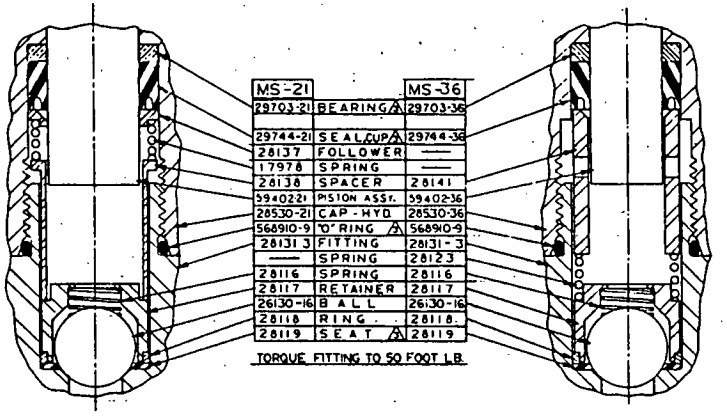

MS-21		MS-36
29703-21	BEARING	29703-36
29744-21	SEAL, CUP	29744-36
28137	FOLLOWER	—
17978	SPRING	—
28138	SPACER	28141
594022-1	PISTON ASSY.	594022-36
28530-21	CAP - HYD	28530-36
568910-9	"O" RING	568910-9
28131-3	FITTING	28131-3
—	SPRING	28123
28116	SPRING	28116
28117	RETAINER	28117
26130-16	BALL	26130-16
28118	RING	28118
28119	SEAT	28119

TORQUE FITTING TO 50 FOOT LB.

INLET CHECK VALVE MS-21 AND MS-36

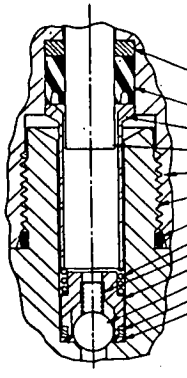

	MS-71	MS-110	MS-188
BEARING	29703-71	29703-110	29703-188
SEAL	29744-71	29744-110	29744-188
SPACER	28142	28143	28144
PISTON ASSY.	594022-71	55733-110	55733-188
CAP - HYD	28530-71	28530-110	28530-188
FITTING	28136-3	28136-3	28136-3
"O" RING	568910-9	568910-9	568910-9
SPRING	28082	28082	28082
SPRING	26685	26685	26685
SHANK	28083-2	28083-2	28083-2
BALL	26130-8	26130-8	26130-8
RING	28083-1	28083-1	28083-1
SEAT	28081-3	28081-3	28081-3

INLET CHECK VALVE MS-71 MS-110 AND MS-188

TORQUE FITTING 125 FOOT LB.

THESE PARTS ARE INCLUDED IN 26410-XX HYDRAULIC SECTION SEALS KIT.

THESE PARTS ARE INCLUDED IN 17178 AIR DRIVE SEALS KIT.

APPLY VERY LIGHT COATING OF HASKEL LUBRICANT P.N. 28442 TO DYNAMIC SEALS IN AIR DRIVE SECTION.

NOTE:

ASSEMBLY DRAWING
MODEL "MS" PUMP

E 81400 28560

THIS DRAWING EMBODIES CONFIDENTIAL PROPRIETARY DESIGN. ALL RIGHTS FOR REPRODUCTION, MANUFACTURING OF PATENTS ARE RESERVED BY THE HASKEL ENGINEERING & SUPPLY CO.

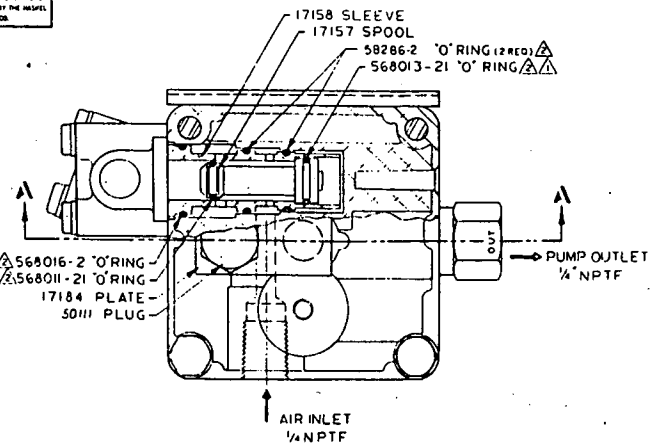

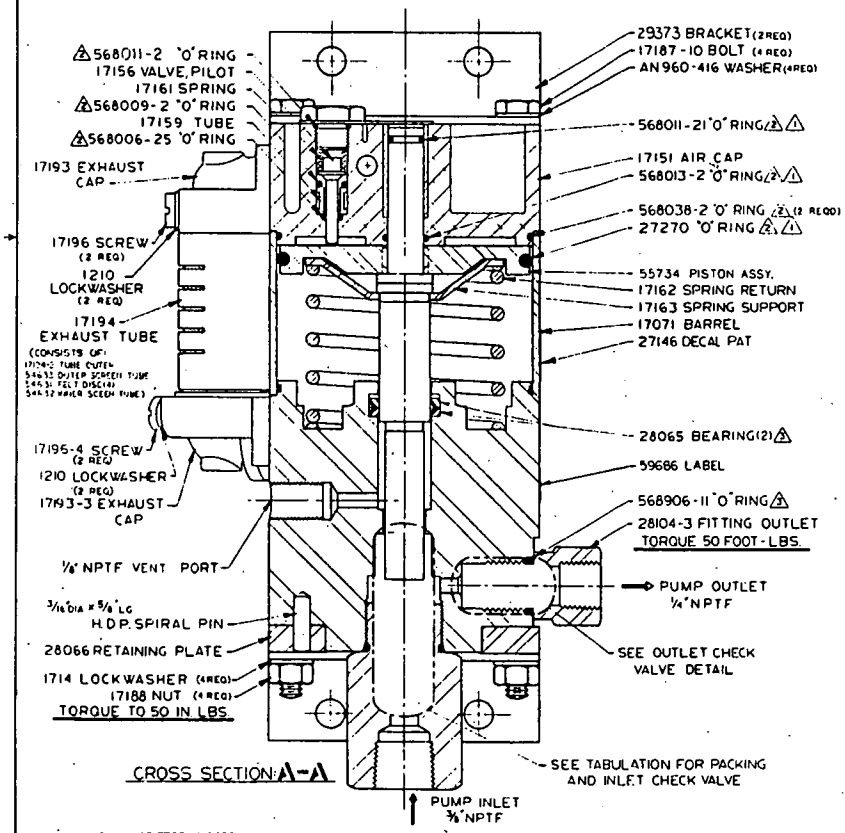

CROSS SECTION: A-A

5. USE TEST PROCEDURE TP-MCPV TO FUNCTIONAL TEST PUMP.

△5 CHAMFER OF BEARING GOES AGAINST THE BODY 28234-XXX

△3 THESE PARTS ARE INCLUDED IN 28247-XX "LIQUID SECTION" SEALS KIT.

△2 THESE PARTS ARE INCLUDED IN 17178 "AIR DRIVE" SEALS KIT.

△1 APPLY VERY LIGHT COATING OF HASKEL LUBRICANT P/N 28442 TO DYNAMIC SEALS IN AIR DRIVE SECTION.

NOTE:

-21

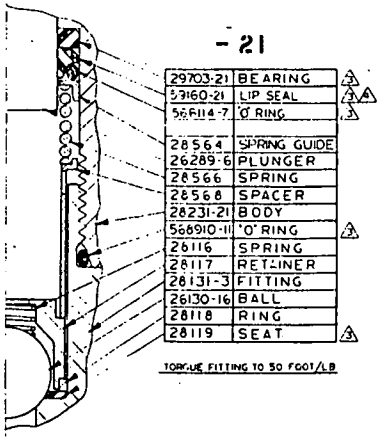

29703-21	BEARING	△3
59160-21	LIP SEAL	△3 △4
568114-7	'O' RING	△3
28564	SPRING GUIDE	
26289-6	PLUNGER	
28566	SPRING	
28568	SPACER	
28231-21	BODY	
568910-11	'O' RING	△3
26116	SPRING	
28117	RETAINER	
28131-3	FITTING	
26130-16	BALL	
28118	RING	
28119	SEAT	△3

TORQUE FITTING TO 50 FOOT/LB

-36

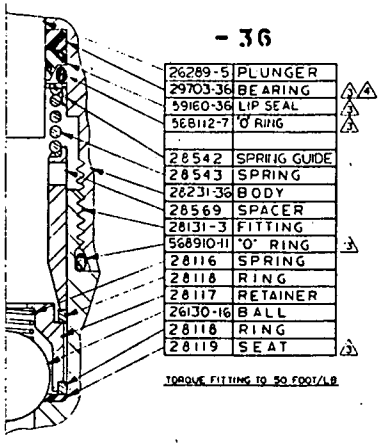

26289-5	PLUNGER	
29703-36	BEARING	△3 △4
59160-36	LIP SEAL	△3
568112-7	'O' RING	△3
28542	SPRING GUIDE	
28543	SPRING	
28231-36	BODY	
28569	SPACER	
28131-3	FITTING	
568910-11	'O' RING	△3
28116	SPRING	
28118	RING	
28117	RETAINER	
26130-16	BALL	
28118	RING	
28119	SEAT	△3

TORQUE FITTING TO 50 FOOT/LB

-71

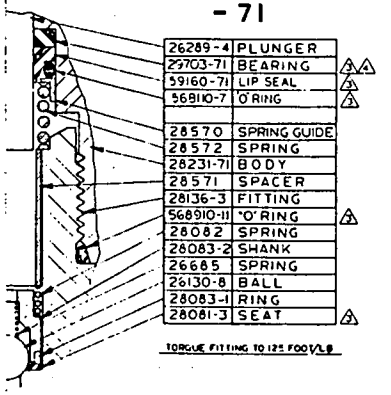

26289-4	PLUNGER	
29703-71	BEARING	△3 △4
59160-71	LIP SEAL	△3
568110-7	'O' RING	△3
28570	SPRING GUIDE	
28572	SPRING	
28231-71	BODY	
28571	SPACER	
28136-3	FITTING	
568910-11	'O' RING	△3
28082	SPRING	
28083-2	SHANK	
26685	SPRING	
26130-8	BALL	
28083-1	RING	
28081-3	SEAT	△3

TORQUE FITTING TO 125 FOOT/LB

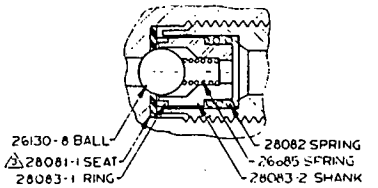

OUTLET CHECK VALVE

-110

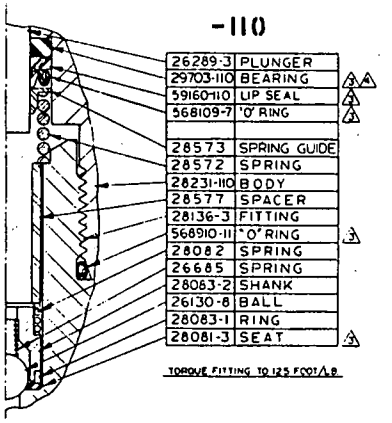

26289-3	PLUNGER	
29703-110	BEARING	△3 △4
59160-110	LIP SEAL	△3
568109-7	'O' RING	△3
28573	SPRING GUIDE	
28572	SPRING	
28231-110	BODY	
28577	SPACER	
28136-3	FITTING	
568910-11	'O' RING	△3
28082	SPRING	
26685	SPRING	
28083-2	SHANK	
26130-8	BALL	
28083-1	RING	
28081-3	SEAT	△3

TORQUE FITTING TO 125 FOOT/LB

-188

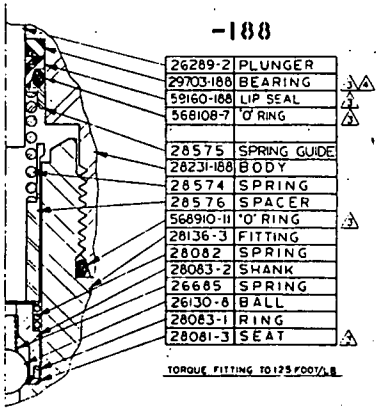

26289-2	PLUNGER	
29703-188	BEARING	△3 △4
59160-188	LIP SEAL	△3
568108-7	'O' RING	△3
28575	SPRING GUIDE	
28231-188	BODY	
28574	SPRING	
28576	SPACER	
568910-11	'O' RING	△3
28136-3	FITTING	
28082	SPRING	
28083-2	SHANK	
26685	SPRING	
26130-8	BALL	
28083-1	RING	
28081-3	SEAT	△3

TORQUE FITTING TO 125 FOOT/LB

28050 L

REVISIONS

LTR	DESCRIPTION	DATE	DFTM	BY	APPD
A	ADDED -71 -110 -188 RATIOS FROM 26780 WHICH IS NOW INSTALLATION DRAWING	2-22-74	4		
B	28751-XX (WAS) 17167-XX	5-21-74	4		
C	17193 CAP REDRAWN PART (REVISED) REVISED: 2-212 SCREW W/1714 LOCK-WASH-EP/GA 96C-416 WASHER 17193-3 (WAS) 26259 ADDED 1210 LOCK-WASHER/17196-4 SCREW 17151 AIR CAP REDRAWN PART (REVISED)	1-7-76	4		
D	29703-21 THRU -188 (WAS) 26751-21 THRU -188	7/15/77	4		
E	50111 PLUG PIPE AN 814-8 (WAS) 17188 WASHER AN 960-416 (WAS)	5-4-77	4		
F	[illegible]	5-5-77	2		
G	[illegible]	9-2-77	2		
H	[illegible]	[illegible]	4		
J	[illegible]	[illegible]	4		
K	[illegible]	[illegible]	4		
L	[illegible]	[illegible]	4		

QTY. REQD.	ITEM NO.	PART NO.	DESCRIPTION

PARTS LIST

DRAWN	J. CAMPBELL	8.8.73
CHECKED	J. W. KELLY	8.10.73
APPR.	D. C. HILL	8.14.73

HASKEL ENGINEERING & SUPPLY CO.

TITLE: ASSEMBLY DRAWING MODEL "MCPV" PUMP

SIZE E — CODE IDENT NO. 81400 — DWG. NO. 28050

SCALE — WT. — SHEET 1 OF 1

28050 L

THIS DRAWING EMBODIES A CONFIDENTIAL PROPRIETARY DESIGN. ALL RIGHTS FOR REPRODUCTION, MANUFACTURING OR PATENTS ARE RESERVED BY HASKEL, INC.

REVISIONS

1. MUST BE REWORKED
2. USE EXISTING PART AS IS
3. NOW SHOP PRACTICE
4. RECORD CHANGE

DISPOSITION OTHER THAN ABOVE TO BE DESCRIBED IN DESCRIPTION COLUMN

LTR.	DESCRIPTION	DATE	DISP.	BY.	APPD.
G	REDRAWN 56922 (WAS) 61031-4-2S 1/8 NPTF (WAS) 1/4 SAE MALE	10/13/88	2	CGW	SDO
H	54603 SPRING (WAS) 52603	12/27/88	4	CGW	SDO
J	REDRAWN TO "C" SIZE ADDED MAA-2.5, MAA-4	7/11/89	1	CGW	SDO
K	ADDED: 17568-2 SEE ECN 1047	10/4/91	1	CGW	[illegible]

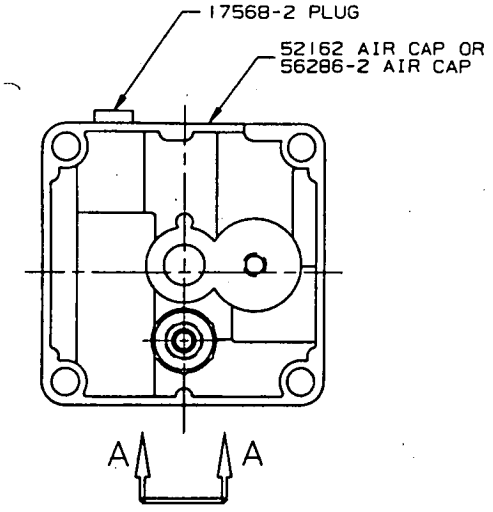

M-PUMP (LIQUID PUMP)		
DELETE	REPLACE WITH	ADD
17151 AIR CAP	52162 AIR CAP	
17161 SPRING	54603 SPRING	
50111 PLUG		56922 FITTING
		53519 STEM SEAL
		17568-2 PLUG

MAA-2.5 MAA-4 (AIR AMPLIFIER)		
DELETE	REPLACE WITH	ADD
56286 AIR CAP	56286-2 AIR CAP	
17161 SPRING	54603 SPRING	
50111 PLUG		56922 FITTING
		53519 STEM SEAL
		17568-2 PLUG

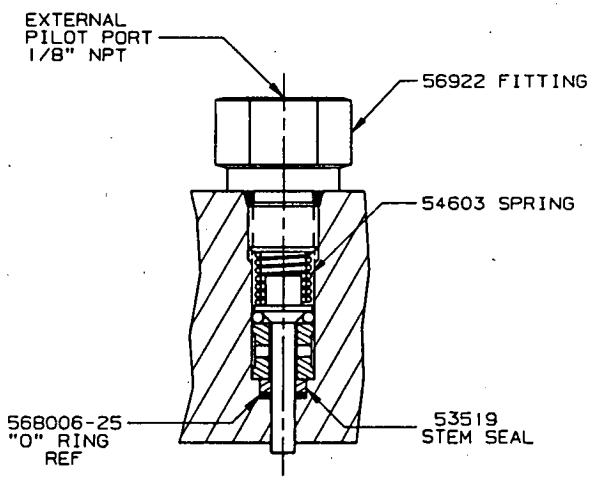

VIEW A-A
SCALE: 2X

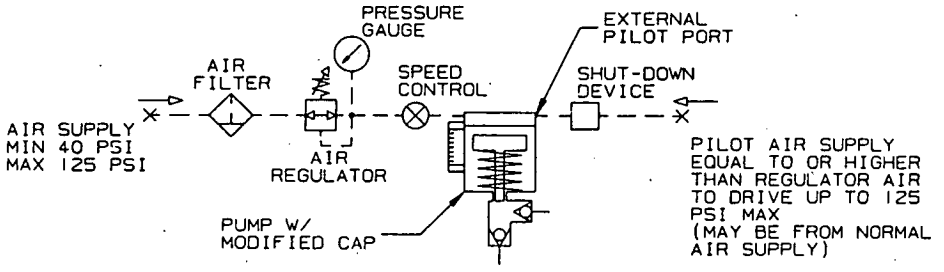

SCHEMATIC

THIS DRAWING MODIFIES A STANDARD M-PUMP FOR EXTERNAL PILOT.

51811 K

MACH. TOLERANCES	CONTRACT No.	HASKEL, INC. 100 EAST GRAHAM PLACE BURBANK, CA. 91502 U.S.A. (818) 843-4000
UNLESS OTHERWISE SPECIFIED DECIMAL DIM. .XX±.03 .XXX±.010 ANGULAR DIM. .X°±1° X°XX'±0°10' CONCENTRICITY .015 T.I.R. BREAK SHARP EDGES INTERNAL RADII .005-.030 .030 MACHINE FINISH 250	DRAWN CGW 6/9/81	TITLE M-PUMP MODIFICATION EXTERNAL PILOT
MATERIAL	CHECKED SDO 6/9/81	
	APPD. SDO 6/9/81	
	TREATMENT	
	FINISH	SIZE C · CODE IDENT. NO. 81400 · DWG. NO. 51811 · REV. K
PART No. NEXT ASSY		SCALE: FULL & NOTED · WT. · SHEET 1 OF 1
APPLICATION		

28550

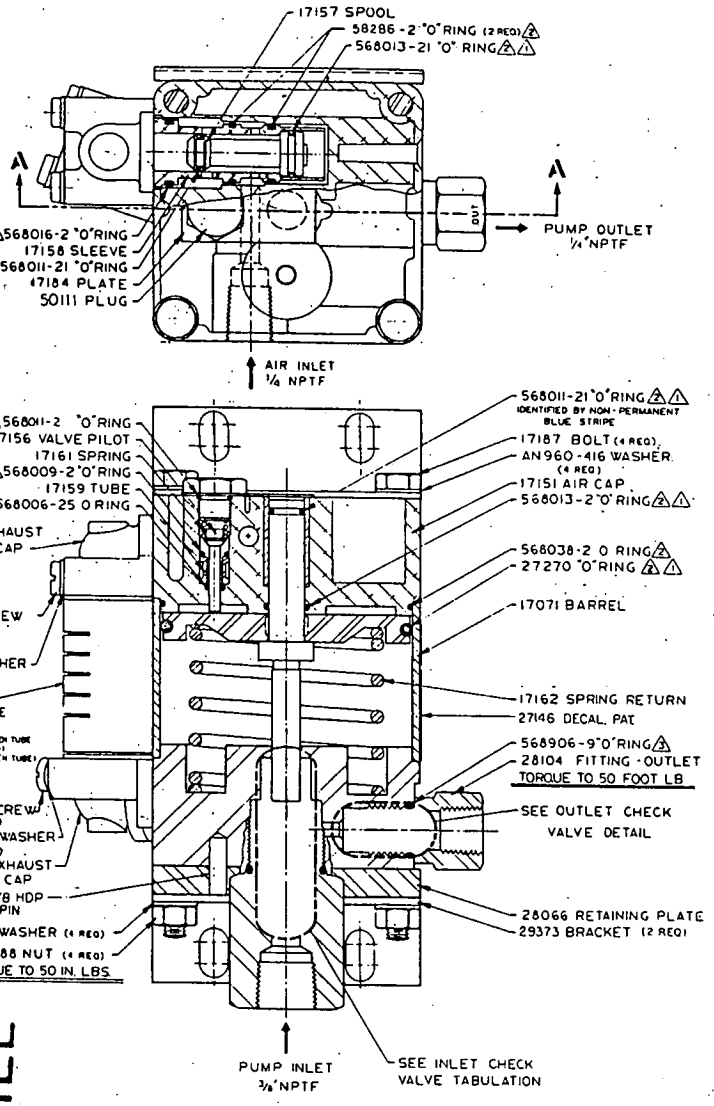

CROSS SECTION A-A

△3 THESE PARTS ARE INCLUDED IN 17179-XX HYDRAULIC SECTION SEALS KIT.

△2 THESE PARTS ARE INCLUDED IN 17178 AIR DRIVE SEALS KIT.

△1 APPLY VERY LIGHT COATING OF HASKEL LUBRICANT P.N. 28442 TO DYNAMIC SEALS IN AIR DRIVE SECTION.

NOTE:

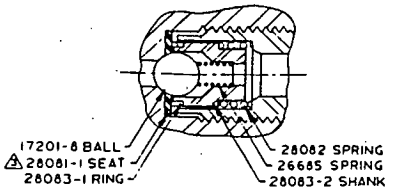

OUTLET CHECK VALVE

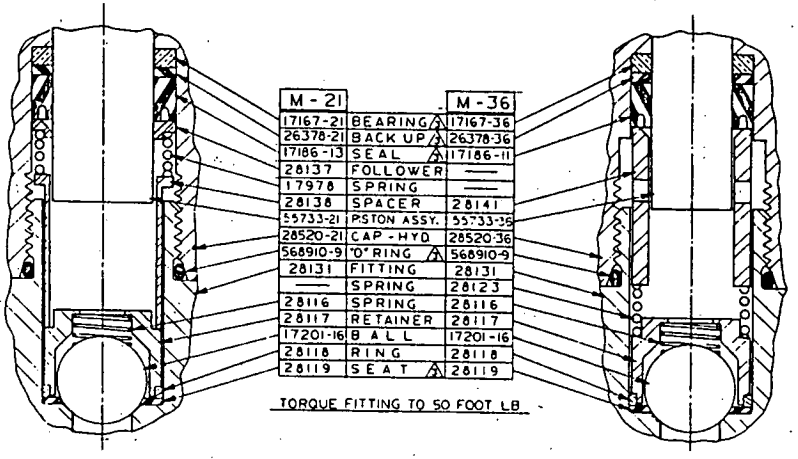

M-21		M-36
17167-21	BEARING △3	17167-36
26378-21	BACK UP △3	26378-36
17186-13	SEAL △3	17186-11
28137	FOLLOWER	—
17978	SPRING	—
28138	SPACER	28141
55733-21	PISTON ASSY.	55733-36
28520-21	CAP - HYD	28520-36
568910-9	"O" RING △3	568910-9
28131	FITTING	28131
—	SPRING	28123
28116	SPRING	28116
28117	RETAINER	28117
17201-16	BALL	17201-16
28118	RING	28118
28119	SEAT △3	28119

TORQUE FITTING TO 50 FOOT LB

INLET CHECK VALVE M-21 AND M-36

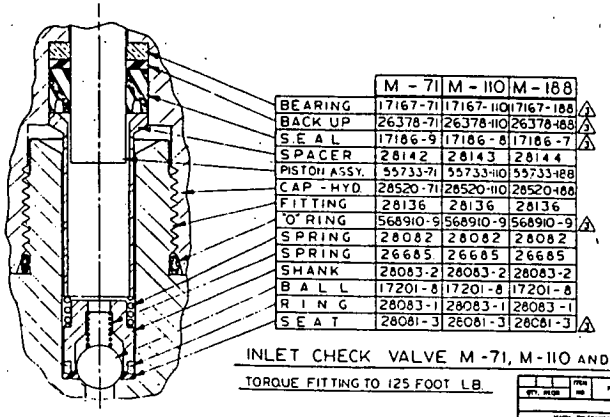

	M-71	M-110	M-188
BEARING	17167-71	17167-110	17167-188 △3
BACK UP	26378-71	26378-110	26378-188 △3
SEAL	17186-9	17186-8	17186-7 △3
SPACER	28142	28143	28144
PISTON ASSY.	55733-71	55733-110	55733-188
CAP - HYD	28520-71	28520-110	28520-188
FITTING	28136	28136	28136
"O" RING	568910-9	568910-9	568910-9 △3
SPRING	28082	28082	28082
SPRING	26685	26685	26685
SHANK	28083-2	28083-2	28083-2
BALL	17201-8	17201-8	17201-8
RING	28083-1	28083-1	28083-1
SEAT	28081-3	28081-3	28081-3 △3

INLET CHECK VALVE M-71, M-110 AND M-188.

TORQUE FITTING TO 125 FOOT LB.

ENGR. FILE

REVISIONS				
A	17193 CAP REDRAWN (PART REVISED) REMOVED: 28296 SCREW W/1714 LOCKWASHER/AN960-416 WASHER / 17193-3 (WAS) 28259 ADDED: 1210 LOCKWASHER/17196-4 SCREW 17151 AIR CAP REDRAWN (PART REVISED)			
B	29373 WAS 17198 BRACKET			
C	568011-2 O-RING WAS 568503-9 O-RING			
D	50111 WAS AN814-3			
E	DELETED 568011-1 O RING & 17161 SPRING IN: 17196 & 17194 AIR FITTING & 17141, 17, 36, 37-140, 188, ADDED 28133, -11, -36, -71, -110, -188 PISTON ASSEMBLY			
F	28139-4 ASSY. DELETED 17194-3 PART & 17194-4 TUBE SHEET & ADDED 54633 OUTER SCREEN TUBE, 54631 FELT DISC (4) & 54632 INNER SCREEN TUBE			
G	3/8 P-2 WAS 3/8 P-1 DELETED 17-21			

QTY. REQD	PART NO.	DESCRIPTION

PARTS LIST

HASKEL ENGINEERING & SUPPLY CO.

TITLE ASSEMBLY DRAWING MODEL "M" PUMP

SIZE E | CODE IDENT. NO. 81400 | DWG. NO. 28550

SCALE 2:1 | SHEET 1 OF 1

28550

28690

ENGR. FILE

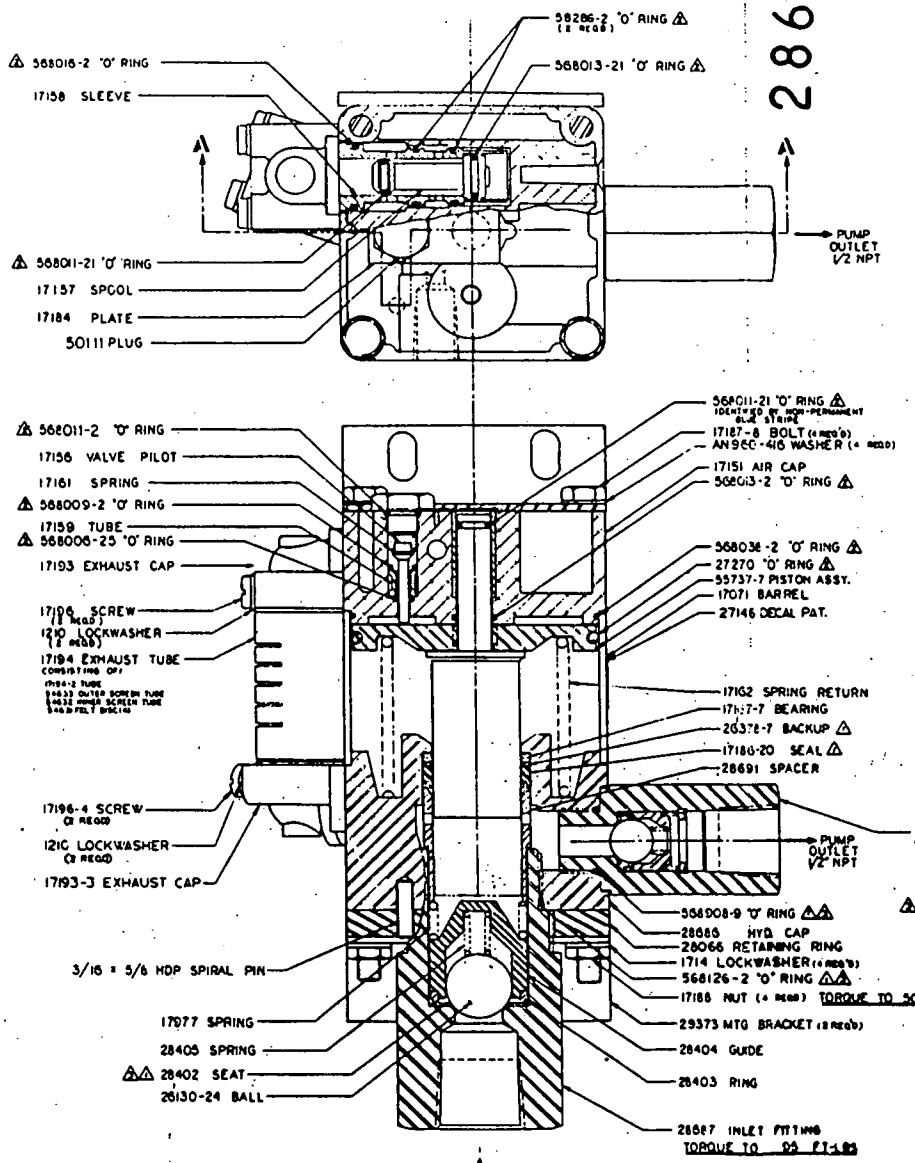

SECTION A-A
M-7

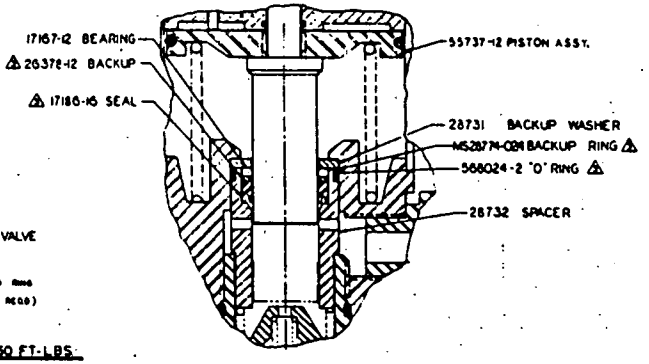

SECTION A-A (PARTIAL)
NOTE: ALL PARTS IDENTICAL TO M-7 EXCEPT AS NOTED
M-12

△ THESE PARTS ARE INCLUDED IN 28695 HYD. SECTION SEALS KIT (M-12)
△ THESE PARTS ARE INCLUDED IN 17176 AIR DRIVE SEALS KIT
△ THESE PARTS ARE INCLUDED IN 28693 HYDRAULIC SECTION SEALS KIT (M-7)

NOTES:

REV	DESCRIPTION				
A	MS28774-014 (Ref) MS28774-10 [illegible]	[illegible]	A	[illegible]	[illegible]
B	17162-3 (Ref) [illegible] ADDED: 17148-4 SCREW(5) REQD [illegible] LOCKWASHER(5) REQD REMOVED: 28682 SCREW(4) REQD [illegible]	[illegible]	B	[illegible]	[illegible]
C	[illegible]	[illegible]	C	[illegible]	[illegible]
D	[illegible]	[illegible]	D	[illegible]	[illegible]
E	[illegible]	[illegible]	E	[illegible]	[illegible]
F	[illegible]	[illegible]	F	JP	[illegible]
G	[illegible]	[illegible]	G	JP	[illegible]
H	[illegible]	[illegible]	H	JP	[illegible]

PARTS LIST

PUMP ASSEMBLY
M-7 & M-12

E 81400 28690

SHEET 1 OF 1

2232

INSTALLATION INFORMATION

PRESSUREPAC POWER UNITS

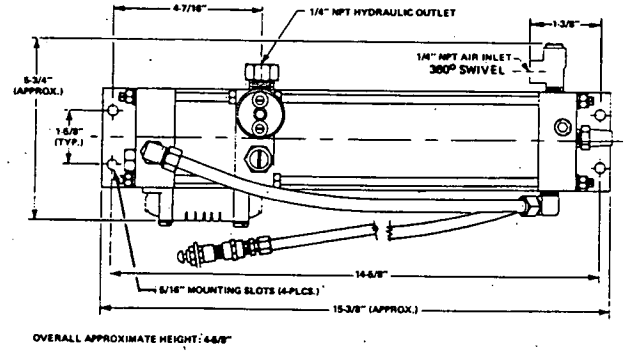

28910 SERIES (TOP VIEW) Approx. Wt. 8 lbs. [without oil]

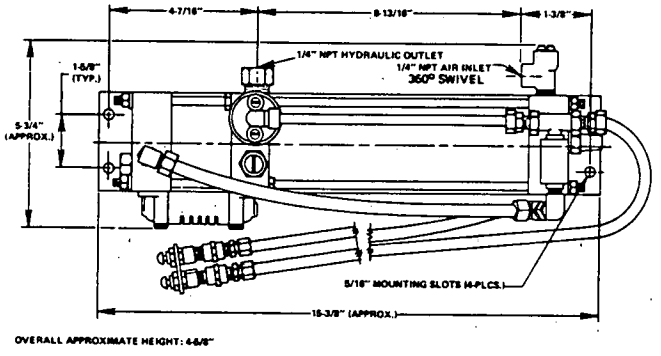

29880 SERIES (TOP VIEW) Approx. Wt. 8 lbs. [without oil]

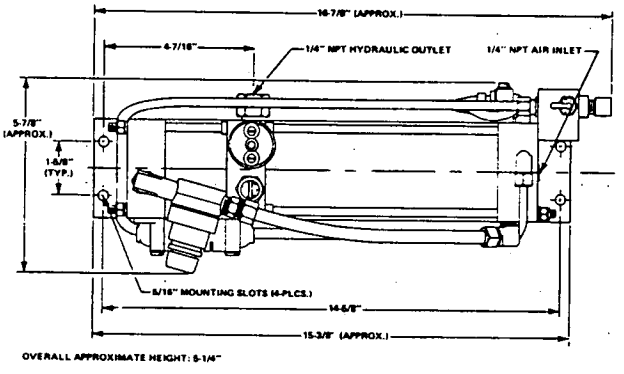

29230 SERIES (TOP VIEW) Approx. Wt. 9½ lbs. [without oil]

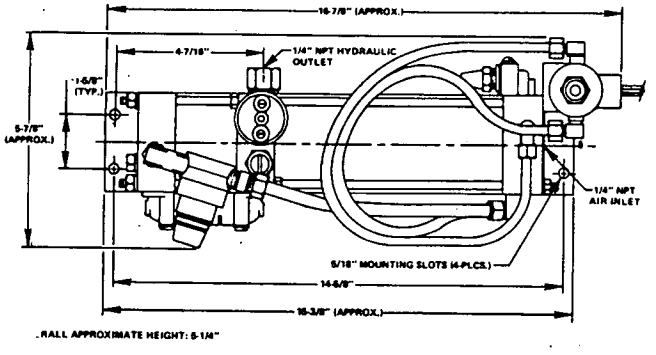

29883 SERIES (TOP VIEW) Approx. Wt. 9½ lbs. [without oil]

PUMPS

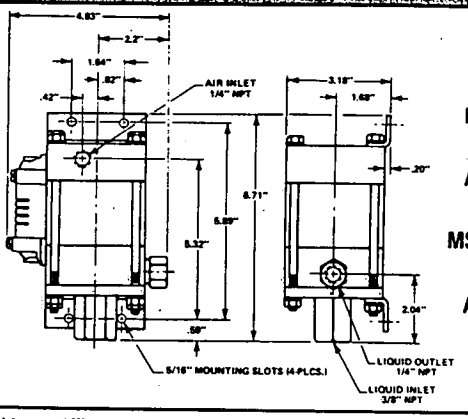

M-21, M-36, M-71, M-110, M-188
Approx. Wt. 6 lbs.

MS-21, MS-36, MS-71, MS-110, MS-188
Approx. Wt. 6 lbs.

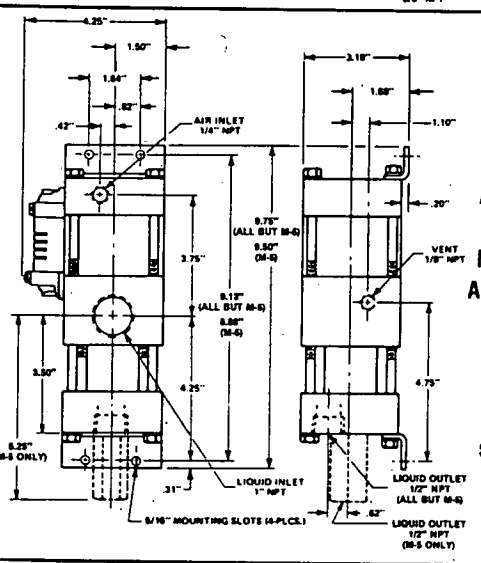

MDTV-5, MDTE-5
Approx. Wt. 11 lbs.

MDSTV-5, MDSTE-5
Approx. Wt. 15½ lbs.

M-5
Approx. Wt. 9 lbs.
(M-5 dimensions shown in phantom)

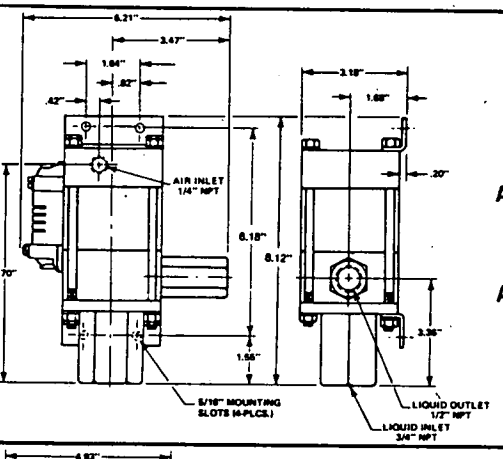

M-7, M-12
Approx. Wt. 9 lbs.

MS-7, MS-12
Approx. Wt. 9 lbs.

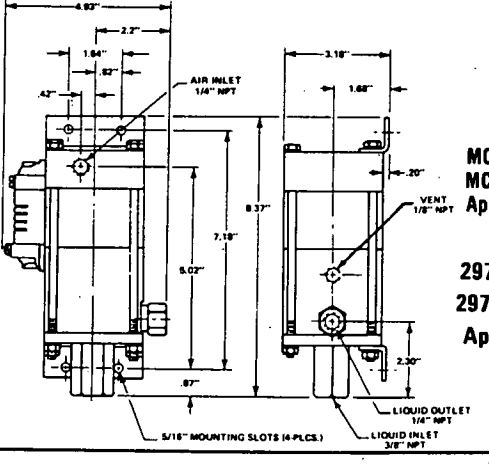

MCPV-21, MCPV-36, MCPV-71, MCPV-110
Approx. Wt. 6½ lbs.

29723-21, 29723-36, 29723-71, 29723-110
Approx. Wt. 6½ lbs.

MAINTENANCE (Continued from page 1)

Disconnect pump from system and remove to a clean, well lit work bench with access to vice, tools, seal kits and spares. All parts removed for inspection should be washed in a suitable de-greasing agent such as Stoddard solvent or equivalent. Inspect all moving parts for wear or scratches. Damaged parts should be replaced. It is recommended that all seals and O-rings are replaced. Specially packed seal kits are available for:

Air Drive P/N 17178 (common to all standard models)

HYDRAULIC SECTION	Model No.
P/N 17179 (plus ratio no.)	M-21 thru -188
P/N 26410 (plus ratio no.)	MS-21 thru -188
P/N 28247 (plus ratio no.)	MCPV-21 thru -110
P/N 51104 (plus ratio no.)	29723-21 thru -110
P/N 27901	MDTV-5, MDSTV-5
P/N 53694	M-5
P/N 28696	M-7
P/N 28695	M-12
P/N 51239	MS-7
P/N 51240	MS-12

Air Drive Section

The air piston has a spring return. Care should be taken when dismantling to prevent the spring from causing the top cap to fly off. The most common cause of air drive malfunction is O-ring 568011-21 on the end of spool 17157. Inspect this first and replace if necessary prior to retesting before further disassembly of air drive. Spool 17157 is most easily removed by removing the muffler upper cap and carefully opening the air drive valve to push the spool and sleeve assembly out with compressed air. The spool and sleeve can be contained by holding a cloth over the exhaust port. The air piston, air barrel, cycling valve and sleeve should be relubricated on assembly with Haskel Silicone Grease P/N 28442. Torque the tie rod nuts evenly to 50 in. lbs.

Hydraulic Section

If dismantled for inspection and parts replacement use following torque values on re-assembly.

Inlet check valve — ratios -7, -12 to 95 ft. lbs.
Inlet check valve — ratios -21, -36 to 50 ft. lbs.
Inlet check valve — ratios -71, -110, -188 to 125 ft. lbs.
Outlet check valves — all ratios to 50 ft. lbs.

When ordering spare parts advise pump serial no., model no., spare part no., and description.

TROUBLE SHOOTING GUIDE

Pump will not cycle, pump bypasses air.

- Inadequate air
  a. See comments on: Air drive systems, page 1 and air drive section, on this page.
- Contaminated air system
  b. Remove sleeve and cycling spool (under upper cap of muffler). Clean, inspect and lubricate with Haskel Lubricant 28442.

False cycle, leak from pilot exhaust (top center of cap).

- Leakage of pilot system.
  Install new air section seal kit.

Pump cycles without pumping or does not stall.

- Check valve(s) not seating or leak in system.
  Inspect check valve(s). First inlet check and then outlet check.

Pump fluid appears at muffler (or vent port on separation models).

- High pressure seal leakage.
  Install new liquid section seal kit.

Cross section of Haskel M- and MS- Series Pump

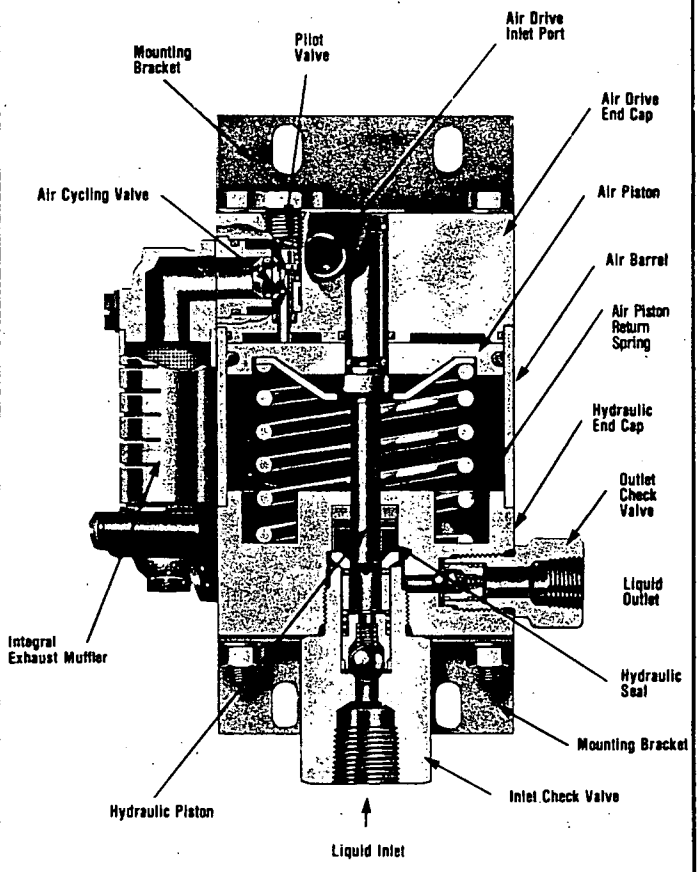

LIMITED WARRANTY

Haskel manufactured products are warranted free of original defects in material and workmanship for a period of one year from date of shipment to first user. This warranty does not include packings, seals, nor failures caused by lack of proper maintenance, incompatible fluids, foreign materials in the driving media or the pumped media, or application of pressures beyond catalog ratings. Products believed to be originally defective may be returned freight prepaid for repair and/or replacement to the distributor, authorized service representative, or to the factory. If upon inspection by the factory or authorized service representative, the problem is found to be originally defective material or workmanship, repair or replacement will be made at no charge for labor or materials, F.O.B. the point of repair or replacement. Permission to return under warranty should be requested before shipment and include the following: the original purchase date, purchase order number, serial number, model number, or other pertinent data to establish warranty claim, and to expedite the return or replacement to the owner.

If pump has been disassembled and reassembled in a facility other than Haskel, warranty is void. If it has been improperly reassembled or substitute parts have been used in place of factory manufactured parts.

Any modification to any Haskel product which you have made or may make in the future has been and will be at your sole risk and responsibility, and without Haskel's approval or consent. Haskel disclaims any and all liability, obligation, or responsibility for the modified product, and for any claims, demands, or causes of action for damage or for personal injuries resulting from the modification and/or use of such a modified Haskel product.

HASKEL'S OBLIGATION WITH RESPECT TO ITS PRODUCTS SHALL BE LIMITED TO REPLACEMENT, AND IN NO EVENT SHALL HASKEL BE LIABLE FOR ANY LOSS OR DAMAGE, CONSEQUENTIAL OR SPECIAL, OF WHATEVER KIND OR NATURE, OR ANY OTHER EXPENSE WHICH MAY ARISE IN CONNECTION WITH OR AS A RESULT OF SUCH PRODUCTS OR THE USE OR INCORPORATION THEREOF IN A JOB. THIS WARRANTY IS EXPRESSLY MADE IN LIEU OF ALL OTHER WARRANTIES OF MERCHANTABILITY AND FITNESS FOR A PARTICULAR PURPOSE. NO EXPRESS WARRANTIES AND NO IMPLIED WARRANTIES, WHETHER OF MERCHANTABILITY OR FITNESS FOR A PARTICULAR PURPOSE OR OTHERWISE, OTHER THAN THOSE EXPRESSLY SET FORTH ABOVE, SHALL APPLY TO HASKEL PRODUCTS.

Haskel, Inc. ■ Burbank, CA 91502 ■ U.S.A. ■ (818) 843-4000
FAX: (818) 841-4291

Haskel Energy Systems, LTD. ■ Sunderland SR5 3JD ■ England
91-549-1212 TLX : 53624 HIENGY G ■ FAX : 91-549-0911

General Pneumatic S.A. ■ Groupe Haskel ■ Lille 59650, France
(20) 04.66.00 ■ FAX : (20) 33.31.95

© 1984 Haskel, Inc. All rights reserved. Permission to reproduce all or part of this material must be obtained from Haskel in writing.
Printed in U.S.A. 861212

Parker
Motion & Control

Pneumatic Divisi n
Richland, Michigan 49083

ISSUED: MARCH, 1994
Supersedes: January, 1994

1R301 HP

MINIATURE SERIES
14E, 14R, 15R & 8AR

MINIATURE SERIES

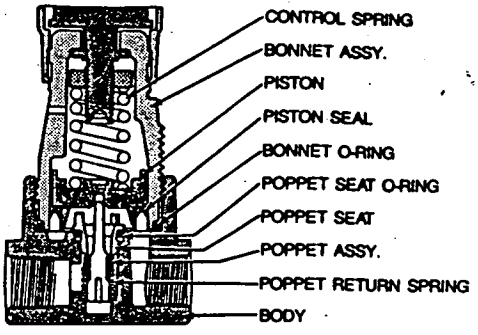

14R & 8AR

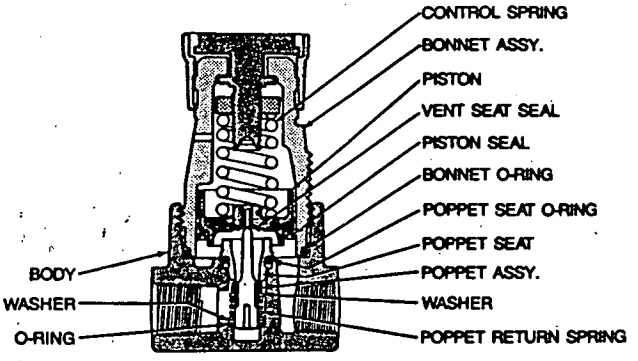

15R

MAINTENANCE SERVICE KITS	14R	15R	8AR
Bonnet Assy.	L01369		L01369
Control Springs 5 to 125 PSI (Air Only) 1 to 15 PSI (Yellow) 2 to 60 PSI (White) 1 to 30 PSI (Silver)	 P01173 P01176 P01174 P01175		 P01173 P01176 P01174 P01175
Non-Relieving Piston Kit (1) Piston (Yellow) (1) Piston Seal	PS422P		
Relieving Piston Kit (1) Piston (1) Piston Seal	PS423P		
Poppet Kit (Unbalanced)	PS424BP		PS424BP
Poppet Kit (Balanced)	PS425BP	PS455BP	
Gauges 0 to 60 PSI — 0 to 414KPa 0 to 160 PSI — 0 to 1103 KPa	 P530154 P77413		
Panel Mounting Nut	P78652		
Mounting Bracket	PS417BP		

MAXIMUM PRESSURE AND TEMPERATURE
FOR 14R & 15R

Maximum (Primary) Operating Pressure 250 PSIG (17 Bar)
Temperature Range -10°F to + 125°F (-23°C to +52°C)

MAXIMUM PRESSURE AND TEMPERATURE
FOR PLASTIC 8AR REGULATOR

Maximum (Primary) Operating Pressure 150 PSIG (10.3 Bar)
Temperature Range 0°F to + 125°F (-18°C to +52°C)

INSTALLATION

1. Install REGULATOR so that fluid flow is in the direction of arrow. Installation must be upstream from devices it is to service (lubricator, valve, cylinder or tool, and mounted closely to the other devices). Mounting may be in any position.
2. Gauge ports are located on both sides of the REGULATOR body for your convenience. It is necessary to install a gauge or socket pipe plugs into each port during installation. (NOTE: Miniature units use ⅛ NPT and Economy units use ¼ NPT.)
3. For protection against rust, pipe scale and other foreign matter, install a FILTER on the upstream (high pressure) sides as closely to the REGULATOR as possible.
4. **8AR Fitting Assembly** - For proper assembly, fittings must be installed hand-tight and tightened by wrench 1/2 turn.
   - To prevent leakage past threads, apply thread sealant to fitting.
   - Parker Prestolok fittings are recommended.
   - Use of hard pipe is not recommended.

⚠ **CAUTION:** EXCESSIVE TURNING OF FITTINGS BY WRENCH MAY RESULT IN PERMANENT DAMAGE AND RENDER THE REGULATOR INOPERABLE.

OPERATION & SERVICE

1. BEFORE INSTALLING OR DISASSEMBLING REGULATOR FOR SERVICING, SHUT OFF FLUID SUPPLY PRESSURE TO REGULATOR.
2. To service the Regulator, disengage the adjusting knob by pulling upward. Turn adjusting knob counterclockwise until compression is released from the pressure control spring. Remove bonnet assembly to service the piston area, or the poppet assembly area, or both.
3. After servicing the Regulator, or upon installing the Regulator, turn on air supply. Then proceed to adjust the desired downstream pressure by turning adjusting knob clockwise. This permits pressure to build up slowly, preventing any unexpected operation of valve, cylinders, tools, etc. in the downstream line.
4. To decrease regulated pressure settings, always reset from a pressure lower than the final setting required. Example, lowering the secondary pressure from 80 PSI to 60 PSI is best accomplished by dropping the secondary pressure to 50 PSI, then adjusting upward to 60 PSI.
5. When desired secondary pressure settings have been reached, push the adjusting knob to lock the adjusting knob.

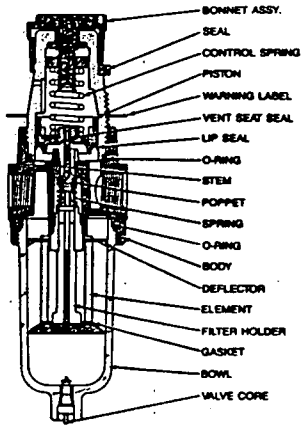

NOTE: SHUT AIR LINE DOWN and exhaust pressure before servicing.
CAUTION: SEE SAFETY: TRANSPARENT BOWLS SECTION

MAINTENANCE SERVICE KITS	14E
Bonnet Assembly	L01369
Control Springs	
5-125 PSI (Gold)	P01173
1-15 PSI (Yellow)	P01176
2-60 PSI (White)	P01174
Non-Relieving Piston Kit (1) Piston (Red) (1) Piston Seal	PS422P
Relieving Piston Kit (1) Piston (Black) (1) Piston Seal	PS423P
Unbalanced Poppet Kit	PS424BP
5 Micrometer Element Kit	PS403P
40 Micrometer Element Kit	PS401P
Polycarbonate Bowl Manual Drain	PS404P
Polycarbonate Bowl Automatic Drain	PS408P
Metal Bowl Manual Drain	PS447BP
Metal Bowl Automatic Drain	PS451P
Gauges	
0 to 60 PSI - 0 to 414KPa	P530154
0 to 160 PSI - 0 to 1103 KPa	P77413
Mounting Bracket Kit With Mounting Ring	PS417BP
Panel Mount Nut	P78652

MAXIMUM PRESSURE AND TEMPERATURE

150 psig @ 125°F (10 bar @ 52°C) with Polycarbonate Bowl
250 psig @ 175°F (17 bar @ 80°C) with Metal Bowl

INSTALLATION

1. The equipment to which the FILTER/REGULATOR is attached should be internally cleaned to remove all traces of accumulated oil and dirt. Also, new pipe or hose should be installed between the filter and equipment being protected.
2. Blow all upstream pipe work clear of accumulated dirt and liquids.
3. Select a filter/regulator location as close as possible to the equipment being protected.
4. Install filter/regulator so that air flows in the direction of arrow on body.

FILTER/REGULATOR

5. Install filter/regulator vertically with the bowl drain mechanism at the bottom. Free moisture will thus drain into the sump ("quiet zone") at the bottom of the bowl (automatic drain models are recommended as standard equipment).
6. Gauge ports are located on both sides of the REGULATOR body for your convenience. It is necessary to install a gauge or socket pipe plugs into each port during installation.

OPERATION & SERVICE

1. Both free moisture and solids are removed automatically by the FILTER/REGULATOR.
2. Drain whenever water level in sump ("quiet zone") reaches the lower baffle. Install Automatic Drain if bowl drain is frequent.
3. The filter element should be removed and replaced when the pressure differential across the filter is excessive.
4. To remove the filter element: **SHUT AIR LINE DOWN** and exhaust the secondary pressure.
   a. Unscrew threaded bowl.
   b. Unscrew element holder and remove element and gaskets.
   c. Clean bowl and internal parts before reassembling.
   d. Replace element and gaskets (2).
   e. Attach element post assembly and tighten firmly.
   f. Replace bowl seal; lubricate seal to assist in retaining it in position. Use only mineral base oils or grease. Do NOT use synthetic oils such as esters, and do NOT use silicones.
   g. Screw bowl into body.
5. The Regulator may be serviced without removing it from the line. Before disassembling FILTER/REGULATOR, **SHUT OFF AIR SUPPLY.** Turn the adjusting knob counterclockwise to bleed down trapped pressure. For servicing piston or control springs, unscrew bonnet from body. For servicing the poppet and relief tube, remove threaded bowl and filter element assembly.
6. **BEFORE TURNING ON AIR SUPPLY, TURN ADJUSTING KNOB COUNTERCLOCKWISE UNTIL COMPRESSION IS RELEASED FROM PRESSURE CONTROL SPRING.** Turn on air pressure. Then proceed to adjust to desired downstream pressure by turning adjusting handle clockwise. This permits pressure to build up slowly in the downstream line.

SAFETY: TRANSPARENT BOWLS

CAUTION:

Polycarbonate bowls, being transparent and tough, are ideal for use with Filters and Lubricators. They are suitable for use in normal industrial environments, but should not be located in areas where they could be subjected to direct sunlight, an impact blow, nor temperatures outside of the rated range. As with most plastics, some chemicals can cause damage. Polycarbonate bowls should not be exposed to chlorinated hydrocarbons, ketones, esters and certain alcohols. They should not be used in air systems where compressors are lubricated with fire-resistant fluids such as phosphate ester and di-ester types.

Metal bowls are recommended where ambient and/or media conditions are not compatible with polycarbonate bowls. Metal bowls resist the action of most such solvents but should not be used where strong acids or bases are present or in salt laden atmospheres. Consult the factory for specific recommendations where these conditions exist.

TO CLEAN POLYCARBONATE BOWLS USE MILD SOAP AND WATER ONLY! DO NOT use cleansing agents such as acetone, benzene, carbon tetrachloride, gasoline, toluene, etc., which are damaging to this plastic.

1	CUSTOMER SERVICE
2	SPECIFICATIONS
3	SAFETY INSTRUCTIONS
4	INSTALLATION & SETUP
5	GENERAL DESCRIPTION
6	OPERATION
7	PREVENTIVE MAINTENANCE
8	TROUBLESHOOTING
9	DRAWINGS
10	RECOMMENDED SPARE PARTS
11	MANUFACTURERS LITERATURE
12	RETURN POLICY
13	OPTIONAL EQUIPMENT

JWI DIRECT RETURN POLICY

To ensure proper handling of your return, please follow these instructions:

1. ALL returns require a RETURN GOODS AUTHORIZATION (RGA) NUMBER. JWI is unable to process your return or issue proper credit without an approved RGA number.

2. ALL returns must be COMPLETE, including all original warranties, manuals, documentation, and packaging.

3. ALL products must be received within 20 days of issuing an RGA number.

4. The return goods authorization number must be written clearly on all boxes being returned. Non-compliance can result in the product being refused and returned to the sender. C.O.D. shipments will not be accepted.

RETURN INSTRUCTIONS

An RGA number is required for ANY returns. To obtain this number, call (616)772-9011 and ask for Customer Service. Be sure to have the following information available:

- The JWI product serial number
- Order number if available
- The part number and description if available
- The reason for the return

1	CUSTOMER SERVICE
2	SPECIFICATIONS
3	SAFETY INSTRUCTIONS
4	INSTALLATION & SETUP
5	GENERAL DESCRIPTION
6	OPERATION
7	PREVENTIVE MAINTENANCE
8	TROUBLESHOOTING
9	DRAWINGS
10	RECOMMENDED SPARE PARTS
11	MANUFACTURERS LITERATURE
12	RETURN POLICY
13	OPTIONAL EQUIPMENT

This chart identifies items that are standard, optional, or can be retrofit to each J-Press.
* Indicates features that provide additional operator safety.

S=Standard O=Optional R=Retrofit	PRESS SIZE (mm)						
DESCRIPTION	250/ 320	470	630	800	1000	1200	1500
Non-Gasketed Chamber Plates	S	OR	OR	OR	OR	OR	OR
Gasketed Chamber Plates	S	S R	S R	S R	S R	S R	S R
Non-Gasketed Membrane Plates		OR	OR	OR	OR	OR	OR
Standard Control Panel		S	S	S	S	S	S
Manual Closure	S	S					
Automatic Closure	OR	OR	S	S	S	S	S
Air-Powered Hydraulic Pump	OR	OR	S	S	S	S	S
Dual-Ratio Hydraulic System						S	
Regular Discharge Manifold	S	S	S	S	S	S	S
Air Blow Manifold	OR	OR	OR	OR	OR	OR	OR
Automatic Pump Control System		OR	OR	OR	OR	OR	OR
Expansion Piece	OR	OR	OR	OR	OR	OR	OR
Back-up plate	OR	OR	OR	OR	OR	OR	OR
Core Blow	OR	OR	OR	OR	OR	OR	OR
Dumpster		OR	OR	OR	OR	OR	OR
Semi-Automatic Plate Shifter			O	O	O	O	O
Fully-Automatic Plate Shifter			O	O	O	O	O
Drum Disposal System	OR	OR	OR	OR			
Extended Legs & Chutes	OR	OR	OR	OR	OR	OR	OR
Roll-off Platform			OR	OR	OR	OR	
Manual Drip Trays		OR	OR	OR	OR		
Powered Drip Trays			O	O	O	O	O
Spread Legs	O	O	O	O	O	O	O
Deadman Hydraulic Control Button*			OR	OR	OR	OR	OR
Safety Guard*			O	O	O	O	O
Light Curtain*			O	O	O	O	O
Splash Curtain*		O	O	O	O	O	O
High-Pressure Construction	O	O	O	O	O	O	O

STANDARD DISCHARGE MANIFOLD

The discharge manifold provides a single filtrate discharge for ease of installation. Construction can be of stainless steel, PVC, CPVC, or other materials.

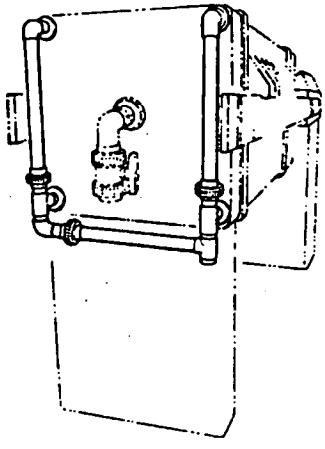

Special manifolds can also be used to insure that the press fills evenly. The manifold can also provide a way to remove liquid remaining in the plumbing of the press after the pumping has stopped (referred to as air blowdown), and to perform other processes such as cake washing.

AIR BLOWDOWN MANIFOLD

The air blowdown manifold consists of piping and valves which connect the four filtrate discharge ports, located in each corner, into a common discharge pipe. Air blow refers to the process of removing excess water from the cloth, cake, and discharge eyes. Following a filtration cycle, the feed line valves are closed, and the manifold valves are closed in such a way that discharge can only exit from the lower right filtrate eye. The air valve is then opened and air enters the press through the upper left port and fills the drainage area. The air passes from the back side of the cloth, through the cake, and the opposite cloth, and then out the lower right port, leaving the press via the piping system. The air forces the excess water from the cake and on the drainage surface. This helps loosen the filter cake, improves cake dryness, and drains the remaining liquid in the bottom discharge eyes.

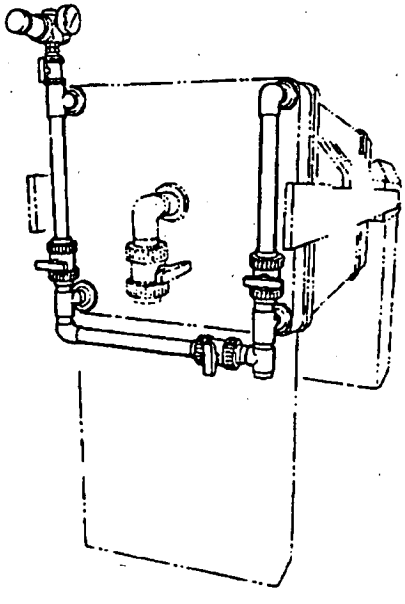

AUTOMATIC PUMP CONTROL

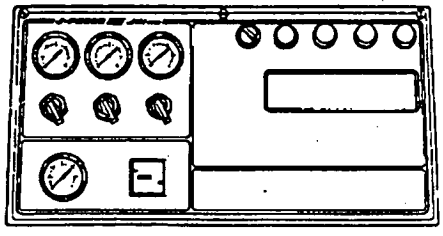

The Automatic Pump Control System automatically increases the feed pump pressure during the filtration cycle. Low initial feed pressure allows a soft layer of slurry particles to be deposited on the filter cloth. This layer becomes the filtering media, enhancing the filterability of the incoming slurry. High initial feed pump pressures can build a very tightly packed, impermeable layer of solids on the filter cloth, restricting the flow of slurry, and ultimately the density of the cake.

The Automatic Pump Control System automatically increases the feed pressure in four intervals throughout the fill cycle. These intervals and pressure are fully adjustable to suit the type of slurry and the percentage of solids. Cycle completion and automatic shutdown occur by monitoring the cycling of the feed pump at the final pressure.

Also incorporated into the system is a low hydraulic pressure safety shut down device. Any time the hydraulic pressure drops below the preset limits, the system completely shuts down, eliminating any possible leaking. The control panel features various switches, pilot lights, and timers to give at-a-glance monitoring of the system.

EXPANSION PIECE

A J-Press can be constructed for future additional capacity by using longer side bars and a removable expansion piece. The expansion piece occupies the space for future plates. The expansion piece is essentially a tubular extension of the hydraulic cylinder, and is held in place by guide wheel cross supports.

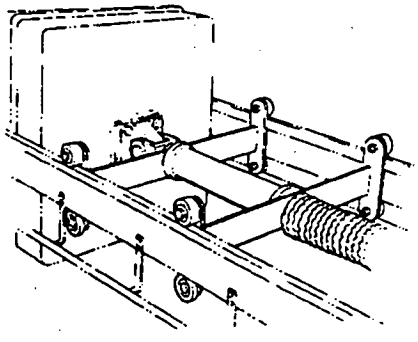

BACK-UP PLATE

A backup plate (a blank plate) can be inserted in a J-Press plate stack to isolate the filter plates between the backup plate and the follower. The backup plate allows a smaller batch to be processed since a smaller number of chambers are used in the process. The tail plate must be relocated and inserted in front of the back-up plate to form a complete chamber and together the two plates provide the strength needed for safe press operation.

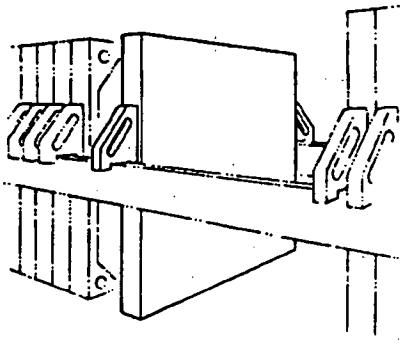

CORE BLOW

Core blow refers to the process of removing excess slurry from the center, or core of the press. Core blow begins at the tail plate, usually at the bottom center or top center. Pressure builds up behind the core, and the core is blown out and returned to the slurry tank. Core blow will typically take no more than 3-5 minutes. If the core does not discharge after 3-5 minutes, the cake is most likely solid enough that core blow will not occur, and is not necessary.

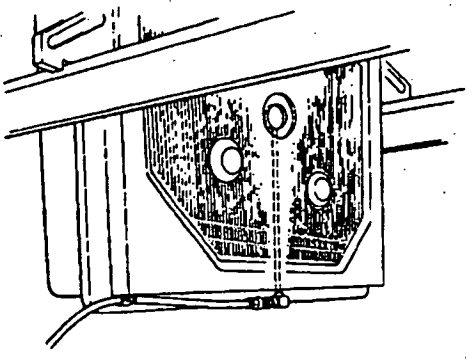

For the core blow process, the tail plate of the J-Press is counter-bored up (or down) to the center feed eye. If double-end feed is supplied, core blow will be attached to the feed. An air line and a valve can easily be attached to provide the 40 psi (2.7 bar) of pressure used to force the excess slurry in the core of the press back out the center feed inlet. Core blow should be performed after air blowdown.

DUMPSTER

JWI can provide a dumpster for almost any size press for easy handling of discharged solids. The dumpsters are furnished with large ball-bearing casters for easy positioning under the presses-either manually or by using a lift truck. When filled, the operator can pick up the dumpster using a fork lift truck and position the dumpster over a larger container. The dumpster can be emptied quickly and easily by pulling a spring-loaded self-dump pin.

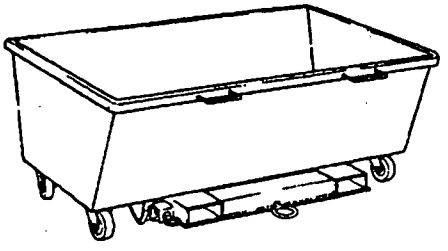

SEMI-AUTOMATIC PLATE SHIFTER

The operator controls the semi-automatic plate shifter by a rocker button control with a deadman safety feature. The operator must maintain pressure on the rocker button control to move the shifter back and forth, or the shifter will stop and remain in the non-functioning position until the operator again applies pressure to the rocker button. The operator manually positions the shifter for each plate to be shifted. All operating components for the shifter are in an enclosed housing for maximum protection.

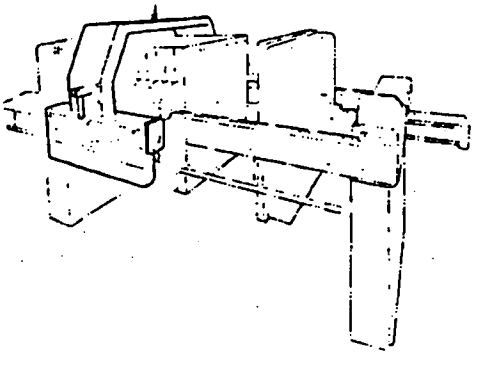

DRUM DISPOSAL SYSTEM

For presses of approximately 0.5 to 25 cubic feet (0.014 to 0.71 cubic meters), where the volume of solids discharged from the J-Press is expected to be large, JWI can provide a Drum Disposal System. For this system, the press is mounted on an elevated platform to raise the press. A series of chutes above the level of standard 55 gallon drums. The chutes direct the solids into the drums, and by using the drum carts provided with the system you can easily transport the drums to another disposal site. Any J-Press ordered with a drum disposal system includes the platform, catwalk, railings, stairs, chutes, and drum cart.

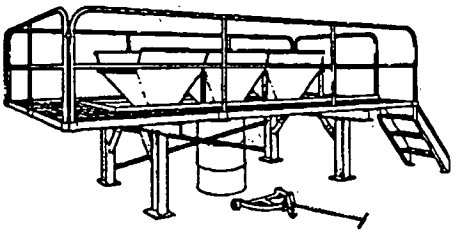

EXTENDED LEGS AND CHUTES

For smaller presses (470 and 630mm) where a drum disposal system is not needed but a barrel-type disposal system is preferred over dumpsters and conveyors, the J-Press can be fitted with extended legs. The extended legs raise the press to allow room for a single barrel to catch the filter cake when released from the press. The operator is still able to control the press from ground level.

When a press is mounted on extended legs, JWI recommends that a chute be attached to the press to direct the discharged solids to the collection barrel.

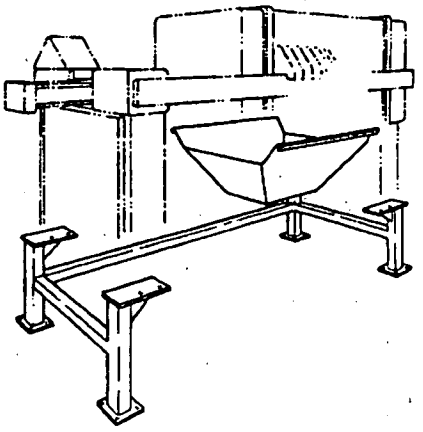

ROLL-OFF PLATFORM

Installing a J-Press above a roll-off container provides efficient cake removal and handling. This method eliminates time and double handling of smaller containers. Like the drum disposal system, the press is mounted on a platform, but is raised substantially higher off the ground. One large chute directs the solids into the roll-off container. Like the drum disposal system, stairs, railings, catwalk, and a platform with extended legs are included.

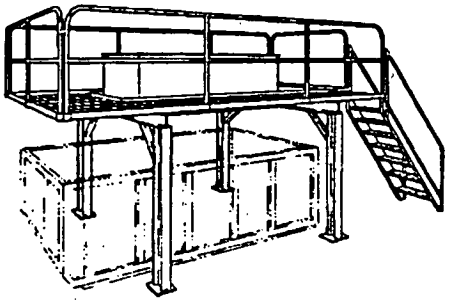

DRIP TRAYS- MANUAL

A drip tray is a series of overlapping sheets set on a metal framework attached to the press under the plates. The drip trays catch liquid that escapes from between the plates during the fill cycle. The tray slants to one side of the press so the liquid can drop into a launder. Before the press is opened to release the filter cakes, the operator slides the sheets to the end of the press and stack them one on top of the other to prevent them from interfering with emptying the press.

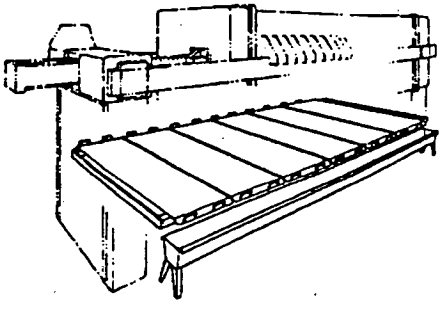

DRIP TRAYS- POWERED

The powered drip trays catch liquid that escapes from between the plate during the process cycle or when cleaning plates. The tray slants to one side of the press where the liquid runs into a single launder (typically designed to mate directly to standard pipe sizes). This may be plumbed to a drain or recycled to the slurry system depending on plumbing arrangements and process requirements. The trays are powered open by hydraulic cylinders to allow cake drop after a process cycle. The trays hang vertically to allow the operator room to scrape or clean the plates.

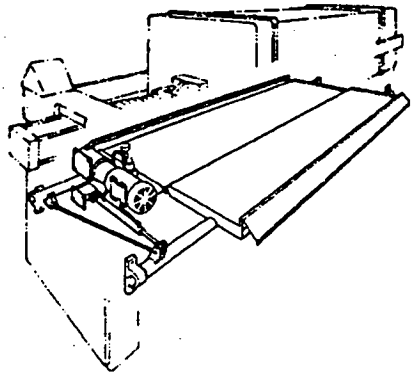

SPREAD LEGS

Another method for handling discharged solids is to install a conveyor under the J-Press to transfer the filter cake to another location. For use with a conveyor system, the J-Press can be constructed with spread legs, to straddle the width of the conveyor, rather than the standard solid-type legs. Spread legs extend beyond the width of the press and are usually made of rectangular tubing or beams. The spread legs for a J-Press can be designed to fit the specific needs of your solids transport system.

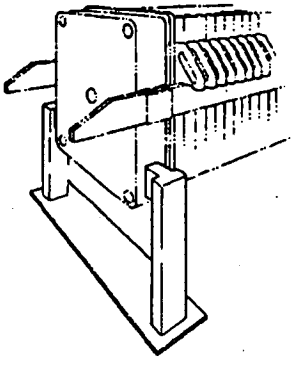

DEADMAN HYDRAULIC CONTROL BUTTON

The deadman hydraulic control button requires that the operator maintain pressure on the close button until the follower is tight against the plate stack and 800 psi (54 bar) of hydraulic pressure is built up. At that time, the operator can release the button and the unit will continue to build operating pressure automatically. If the operator releases the button any time during the closing of the press, the follower stops its forward travel.

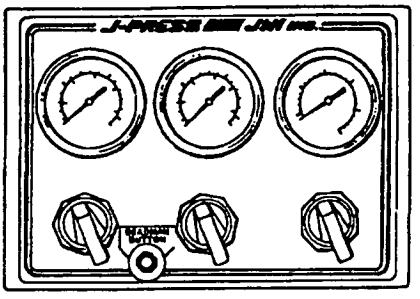

SAFETY GUARD

The safety guard is an expanded metal screen mounted on the non-operating side of the press. The purpose of the safety guard is to prevent injuries to personnel who might approach the press from behind while the press is opening or closing, or when the shifter is operating.

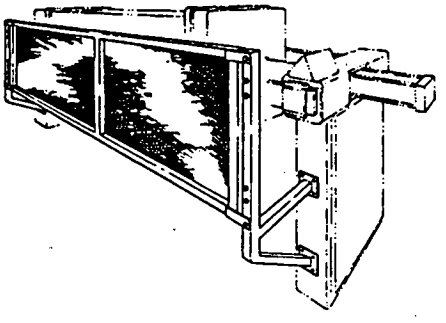

LIGHT CURTAIN

The light curtain provides maximum operator safety by stopping all press motion should an operator reach into the plate stack area. Operation will not continue until the operator is out of the light curtain area, and has pressed a restart button. Placed on the operating side of the J-Press, the light curtain consists of two units-a sender and a receiver. Infrared light travels between the two units. Any time the light beam is interrupted, motion stops until the light beam is cleared.

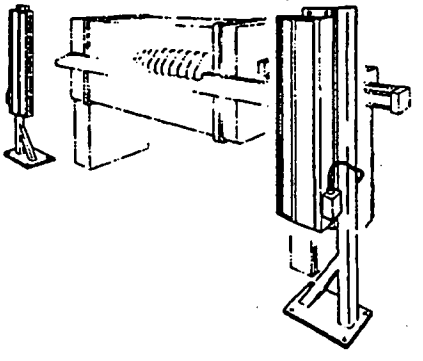

SPLASH CURTAIN

Splash curtains help contain liquid that may, under certain conditions, squirt or splash from between the filter plates during the fill cycle, or during power washing of the filter plates and cloths. The vinyl splash curtains are attached to a metal framework that is attached to the J-Press. The curtains are typically hung on the two longest sides of the press and across the top of the press, but may be customized for other arrangements.

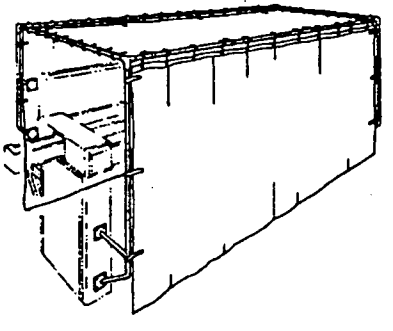

ELECTRONIC METERING PUMPS

INSTALLATION
MAINTENANCE
TROUBLESHOOTING

Please record the following data:
(Information on Pump Box and Pump Data Plate)

Pump Model Number: _____
Pump Serial Number: _____
Installation Date: _____
Installation Location: _____

When ordering replacement parts for your LMI Metering Pump or accessory, please include the complete model number and serial number of your unit.

LMI
LIQUID METRONICS DIVISION
MILTON ROY
8 Post Office Square • Acton, MA 01720 U.S.A.
TEL (508) 263-9800 • FAX (508) 264-9172

Catalog Sec. 6.0, pg.0001
Replaces same of 3/94
1615.G 7/94

CONTENTS

1.0 INTRODUCTION 4

2.0 UNPACKING CHECKLIST 6

3.0 PRE-INSTALLATION INSTRUCTIONS 8

4.0 INSTALLATION 10

5.0 METHODS OF EXTERNAL TRIGGERING 20

6.0 START-UP & ADJUSTMENT 22

7.0 CALIBRATION 25

8.0 SPARE PARTS REPLACEMENT
& ROUTINE MAINTENANCE 28

9.0 PROPER ZEROING/
KNOB REPLACEMENT 34

10.0 TROUBLESHOOTING 36

11.0 EPU RESISTANCE CHART 40

1.0 INTRODUCTION

LMI is the world's most versatile manufacturer of economical and efficient metering pumps. This manual addresses the installation, maintenance and troubleshooting procedures for manually and externally controlled pumps. LMI has a worldwide network of stocking representatives and authorized repair centers to give you prompt and efficient service.

Please review this manual carefully. Pay particular attention to warnings and precautions. Always follow good safety procedures, including the use of proper clothing, eye and face protection.

This manual is for A, B, C, J, P, Z Series pumps.

EXAMPLE:

Your pump consists of two parts:

1. The **Drive Assembly** and
2. The **Liquid Handling Assembly**.

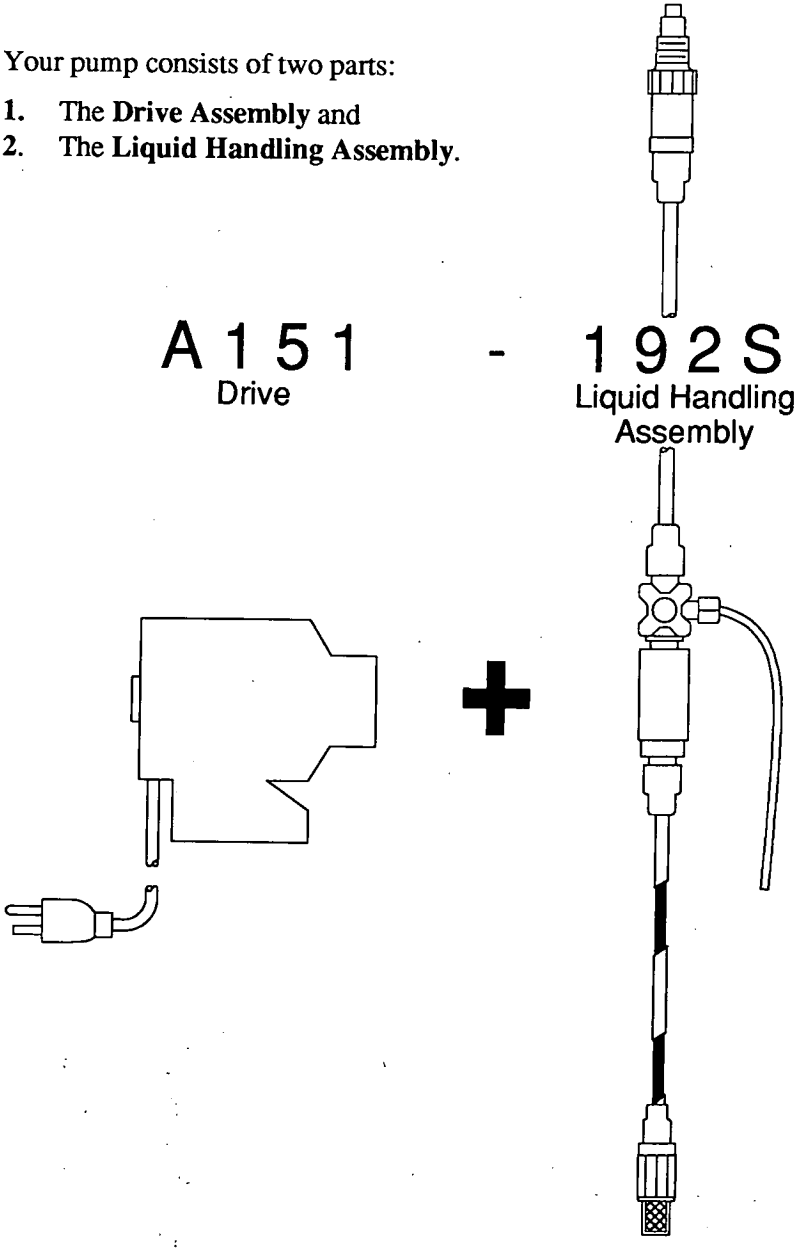

2.0 UNPACKING

Your carton will contain the following items. Please notify the carrier immediately if there are any signs of damage to the pump or its parts. Notify your pump supplier if any of the following parts are missing.

Please refer to the enclosed Drive Assembly Parts List Sheet for an illustration of your complete pump, electrical diagram and a parts list.

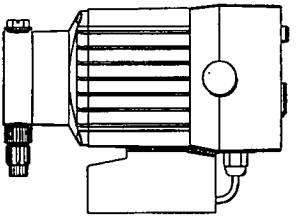

Metering Pump

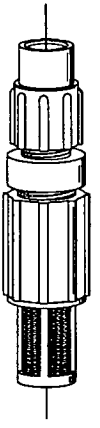

Foot Valve

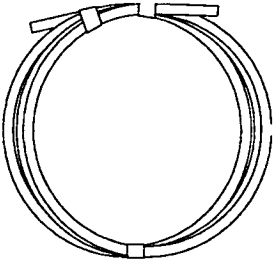

Tubing

Depending on the model, your carton may contain 0, 1, 2 or 3 rolls of tubing. Your carton may contain an additional roll of clear vinyl tubing, this is for connection to the SUCTION SIDE OF THE PUMP HEAD ONLY.

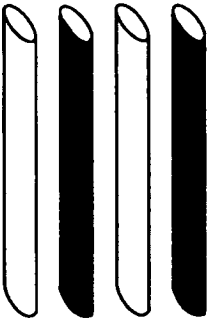

Suction Tubing Straightener

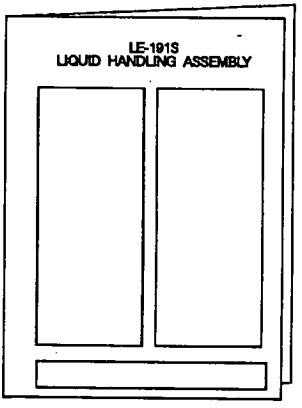

Liquid Handling Assembly Sheet

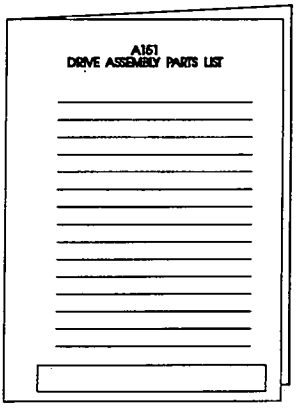

Drive Assembly Parts List & Exploded View Drawing

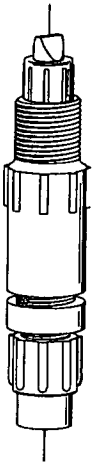

Injection Check Valve

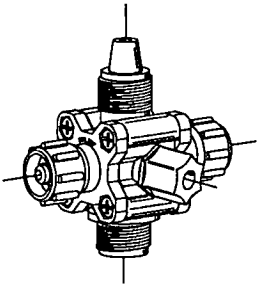

FOUR FUNCTION Valve (4-FV) and Tubing

Your carton may or may not contain a 4-FV, an accessory for pump models ending in "M" or "S".

3.0 PRE-INSTALLATION INSTRUCTIONS

The following precautions should be taken when working with LMI metering pumps. Please read this section carefully prior to installation.

3.1 Precautions

Protective Clothing

ALWAYS wear protective clothing, face shield, safety glasses and gloves when working on or near your metering pump. Additional precautions should be taken depending on the solution being pumped. Refer to MSDS precautions from your solution supplier.

Water Pre-Prime

All LMI pumps are pre-primed with water when shipped from the factory. If your solution is not compatible with water, disassemble the Pump Head Assembly. Thoroughly dry the pump head, valves, seal rings, balls and Liquifram® (diaphragm). Re-assemble head assembly tightening screws in a crisscross pattern. Refill the pump head with the solution to be pumped before priming the pump. (This will aid in priming).

Solution Compatibility

Your Liquid Handling Assembly Sheet lists the materials of construction included in the liquid handling portion of your pump. Should you have any further compatibility questions on your LMI Metering Pump, review the **LMI Pump Selection Guide** and **Chemical Resistance Chart** for compatibility. If this sheet is not available to you, call your local LMI distributor, or the LMI Customer Service Department for further information.

Tubing Connections

Inlet and outlet tubing or pipe sizes must not be reduced. Make certain that all tubing is SECURELY ATTACHED to fittings prior to start-up. (See Section 4.3, Tubing Connections). ALWAYS use LMI supplied tubing with your pump, as the tubing is specifically designed for maximum compatibility with the pump operation. It is recommended that all tubing be shielded to prevent possible injury in case of rupture or accidental damage.

Fittings And Machine Threads

All fittings should be hand tightened to a maximum of 1/8 - 1/4 turn after the fitting contacts the seal ring. DO NOT OVERTIGHTEN FITTINGS. Overtightening or use of a pipe wrench can cause damage to the fittings, seal rings, or pump head, causing the pump to LOSE PRIME OR NOT FUNCTION.

All LMI pumps have straight 3/4"-16 or 1"-12 machine threads on the head and fittings and are sealed by the seal rings. DO NOT use Teflon tape or pipe dope to seal threads. Teflon Tape may only be used on the 1/2" NPT thread side of the Injection Check Valve before installing in a pipe line or tee.

Plumbing

Always adhere to your local plumbing codes and requirements. Be sure installation does not constitute a cross connection. Check local plumbing codes for guidelines. LMI is not responsible for improper installations.

Electrical Connections

WARNING: to reduce the risk of electrical shock, the metering pump must be plugged into a grounded outlet with ratings conforming to the data on the pump control panel. The pump must be connected to a good ground. **DO NOT USE ADAPTERS!** All wiring must conform to local electrical codes.

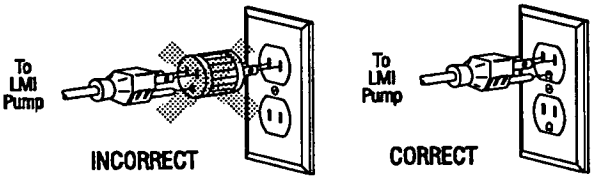

4.0 INSTALLATION

4.1 Pump Location and Installation

Locate pump in an area convenient to solution tank and electrical supply.

The pump should be accessible for routine maintenance, and should not be subjected to ambient temperatures above 122°F (50°C). If the pump will be exposed to direct sunlight, LMI black, UV resistant tubing should be installed.

4.2 Pump Mounting

The pump can be mounted in one of two ways:

A. **FLOODED SUCTION** (ideal installation) or

B. **SUCTION LIFT** - when suction lift is less than 5 feet (1.5 m) for solutions having a specific gravity of water. For denser solutions, consult the factory.

Your LMI metering pump must be mounted so that the suction and discharge valves are vertical. **NEVER position pump head and fittings horizontally.**

The pump is mounted at the base of the storage tank. This installation is the most trouble-free, and is recommended for very low outputs, solutions that gasify, and high viscosity solutions. Since the suction tubing is filled with solution, priming is accomplished quickly and the chance of losing prime is reduced.

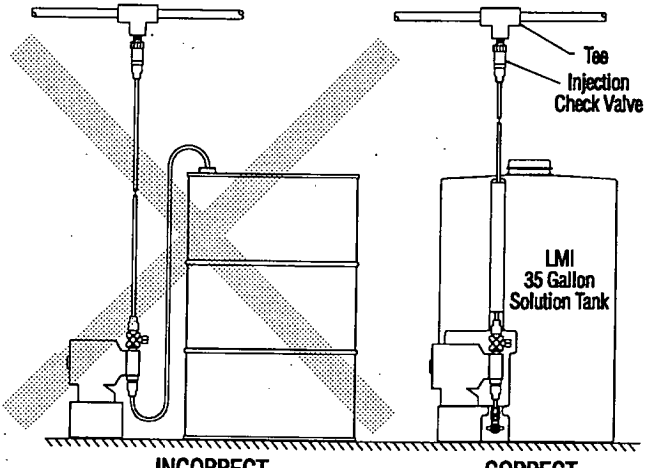

INCORRECT

Avoid this type of false flooded suction.

CORRECT

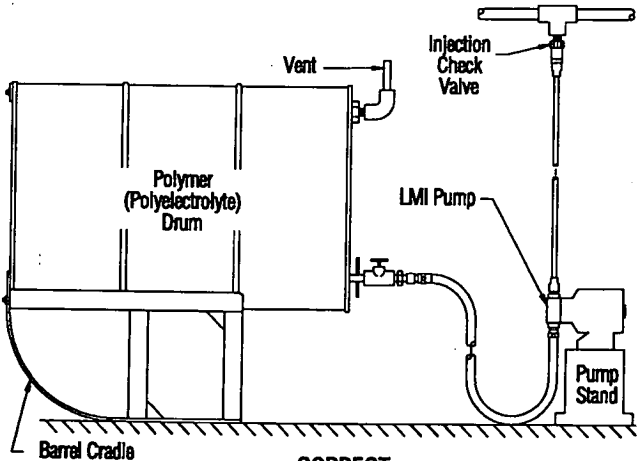

CORRECT

4.2B1 Suction Lift - Wall Bracket M unt

The pump may be mounted using an LMI Wall Mount Bracket Assembly (part no. 28272) directly above the solution tank. A pump mounted in this manner allows for easy changing of solution tanks or drums.

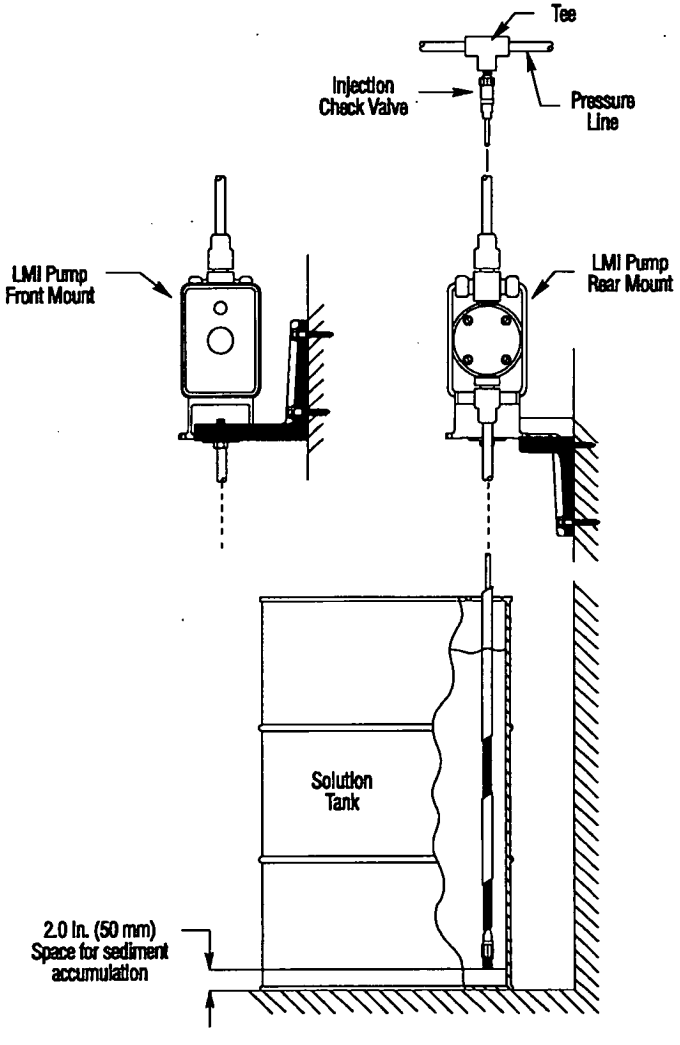

4.2B2 Sucti n Lift - Tank Mount

The pump may be mounted on a molded tank provided there is a recess to keep pump stationary. LMI 10 gallon tanks (part no. 27421) and 50 gallon tanks (part no. 26350) have molded recesses for pump mounting.

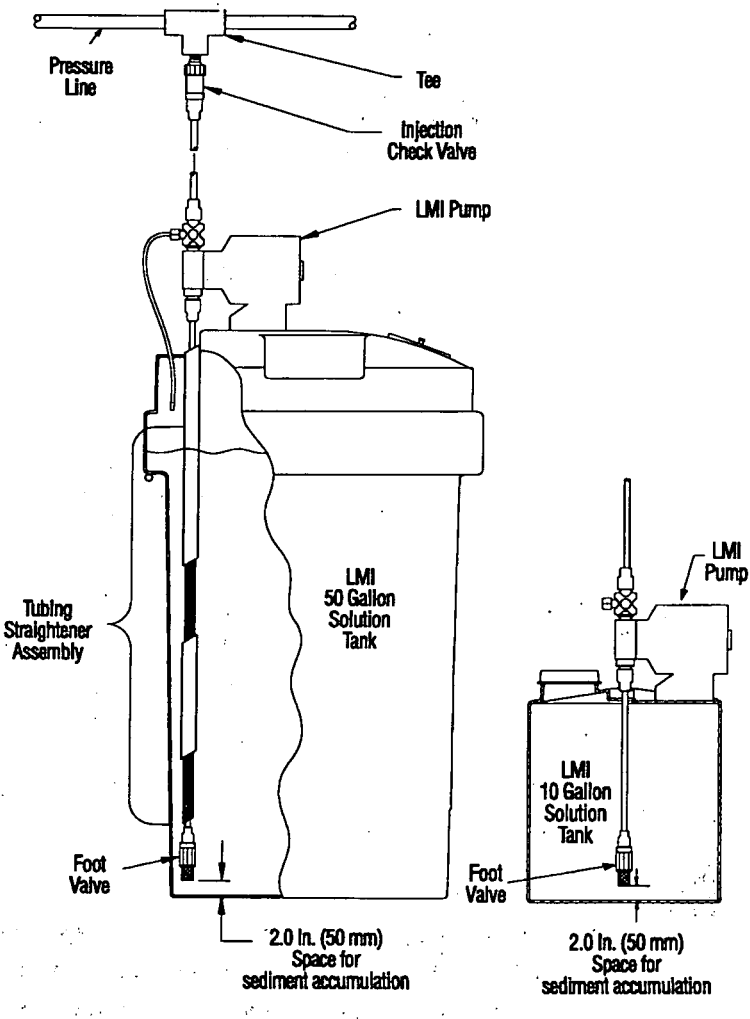

4.2B3 Suction - Shelf M unt

The pump may be mounted on a shelf (customer supplied) maintaining a suction lift of less than 5 feet (1.5 m). An LMI mounting kit (part number 10461) is available for securing the pump to a shelf.

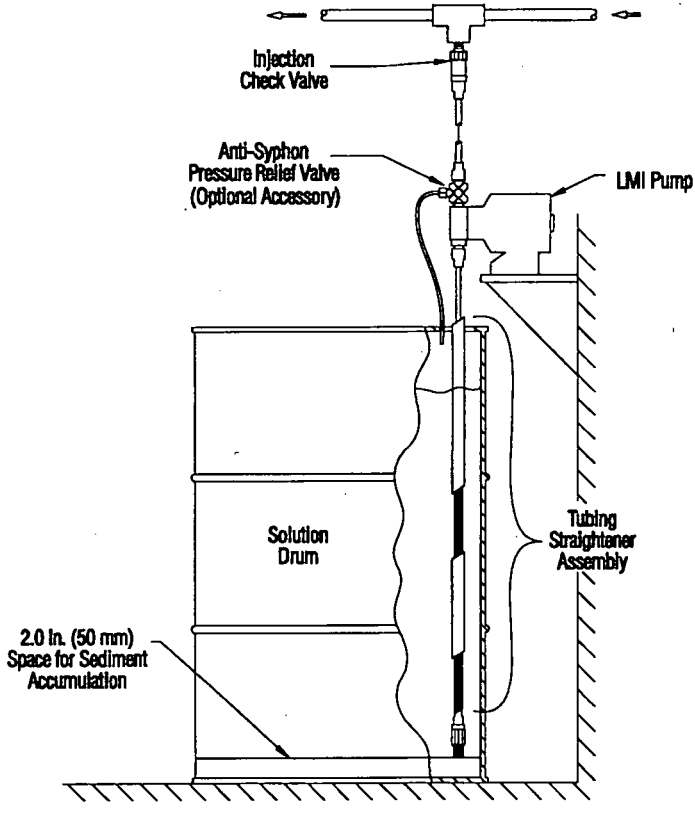

4.3 Tubing Connections

A. Use only LMI tubing.

B. DO NOT USE CLEAR VINYL TUBING ON THE DISCHARGE SIDE OF THE PUMP. The pressure created by the pump can rupture the vinyl tubing.

C. Before installation, all tubing must be cut with a clean square end.

D. Valve and head connections from the factory are capped or plugged to retain pre-prime water. Remove and discard these caps or plugs before connecting tubing.

DO NOT USE PLIERS OR PIPE WRENCH ON COUPLING NUTS OR FITTINGS.

Tubing Connection 1/4" O.D. (.250") Tubing

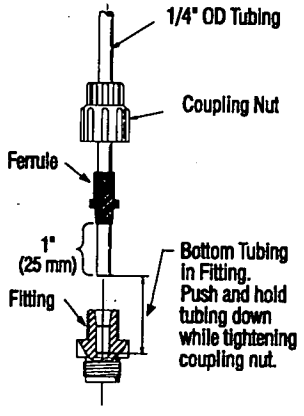

Tubing Connection 3/8" O.D. (.375") Tubing

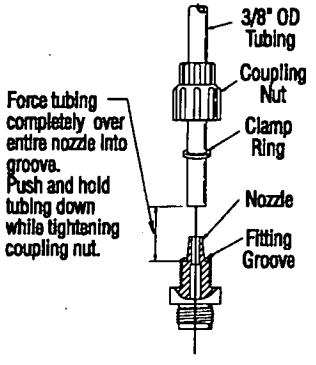

Tubing Connection 1/2" O.D. (.5") Tubing

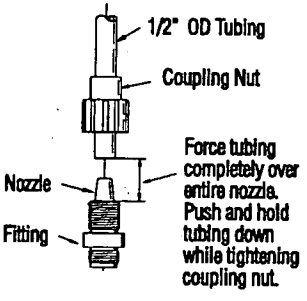

1/4" or 1/2" NPT Pipe Thread Connection

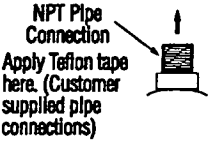

NOTE: See Metric Liquid Handling Sheet for metric tubing connections.

4.4 Four Function Valve (4-FV)

Some pump models come supplied with a 4-FV (pump models which end in "M"or"S"). If your pump is not equipped with this feature, and you feel it is needed in your application, it can be purchased as an accessory. Contact your local distributor for ordering information. The functions of the 4-FV are:

1. **Anti-Syphon (automatic).**
   Prevents syphoning when pumping downhill or into a vacuum.
2. **Back Pressure (automatic).**
   Supplies approximately 25 psi back pressure to prevent over pumping when little or no system back pressure is present.
3. **Pressure Relief (automatic).**
   If discharge line is overpressurized, the valve opens sending the solution back to your supply tank.
4. **Line Depressurization (manual).**
   By pulling both knobs, the discharge line will drain back to your supply tank.

Typical 4-FV Applications

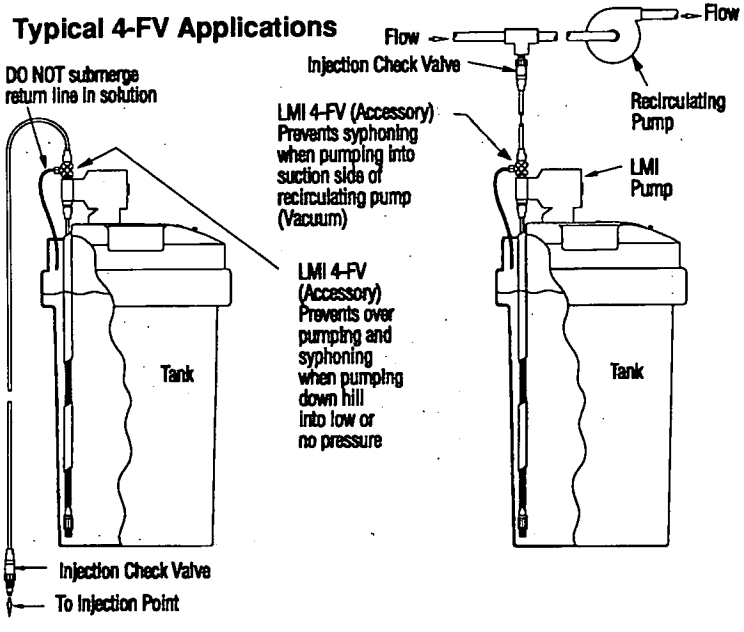

4.5 4-FV Installation

To install the 4-FV, remove the yellow screw cap on the top of the pump head and screw in the 4-FV so that the valve contacts the seal ring. An additional 1/8 - 1/4 turn may be necessary to prevent leakage. **DO NOT OVERTIGHTEN**. Overtightening can cause fittings and seal rings to distort, crack and function improperly.

1/4" O.D. tubing connects to the side of the 4-FV and acts as a return line to the solution tank. This tubing must **NOT** be submerged in the solution.

WARNING: This return line tubing must be secured to insure pumped solution will return to supply tank.

4-FV Tubing Connection

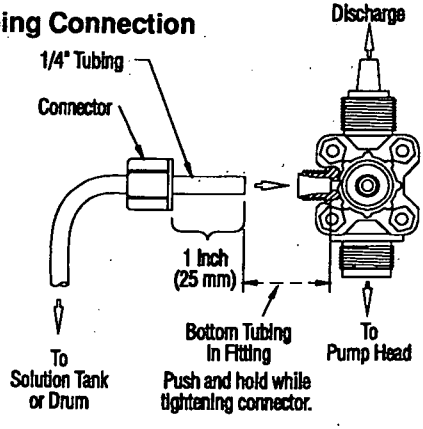

4.6 Foot Valve/Suction Tubing Straightener Installation

The Foot Valve acts as a check valve to keep the pump primed in suction lift applications.

The valve is designed to be submersed in the solution tank or drum and must sit in a vertical position at the bottom. Position approximately 2 inches (50 mm) off the bottom if the tank or drum contains sediment.

The suction tubing straightener, when assembled, positions the foot valve and suction tubing in a vertical position.

1. Attach the foot valve to one end of the suction tubing (see Tubing Connections, section 4.3).
2. Assemble the suction tubing straightener by pushing together alternating yellow and black tubes. Adjust the length of the tubing straightener by pushing tubes further together so when placed over the suction tubing and sitting on the foot valve, approximately 3 inches (75 mm) of tubing exits the tubing straightener on the side to be connected to the pump.
3. Place foot valve, tubing and suction tubing straightener into the solution tank. Check that the foot valve is vertical and approximately 2 inches (50 mm) from the bottom of the tank or drum (see illustration). Connect the other end of the tubing to the suction side of the pump head (bottom side).

Proper Foot Valve Position

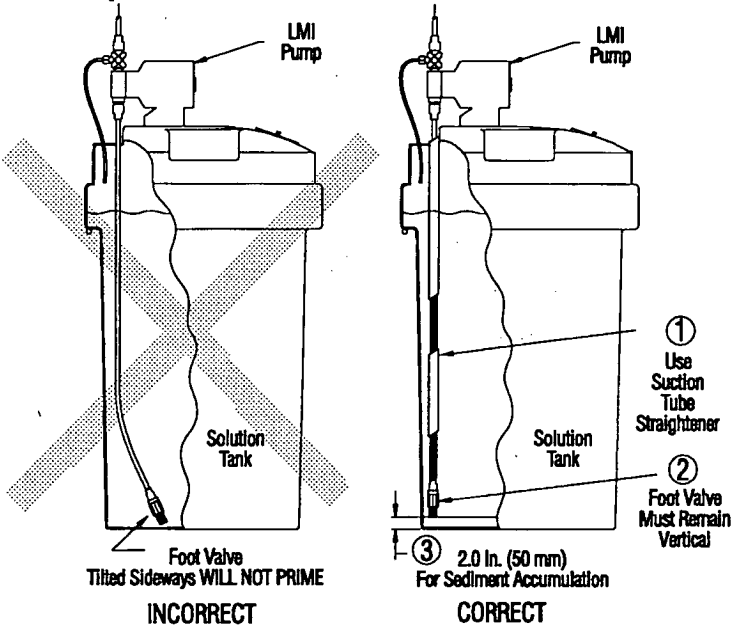

4.7 Injection Check Valve Installation

The Injection Check Valve prevents backflow from a treated line. Connect the Injection Check Valve to your "DISCHARGE" (outlet) line. Any size NPTF fitting or pipe tee with a reducing bushing to 1/2" NPTF will accept the injection check valve. Use Teflon tape or pipe dope to seal the pipe threads only.

When installing the Injection Check Valve, be sure to position it so that the valve enters the bottom of your pipe in a vertical position. Variations left and right within 80° are acceptable. (See illustration below)

After cutting an appropriate length of tubing, connect tubing to the injection check valve then back to the discharge side of the pump head (top side), making sure it does not crimp or come into contact with hot or sharp surfaces.

Typical Injection Check Valve Installations

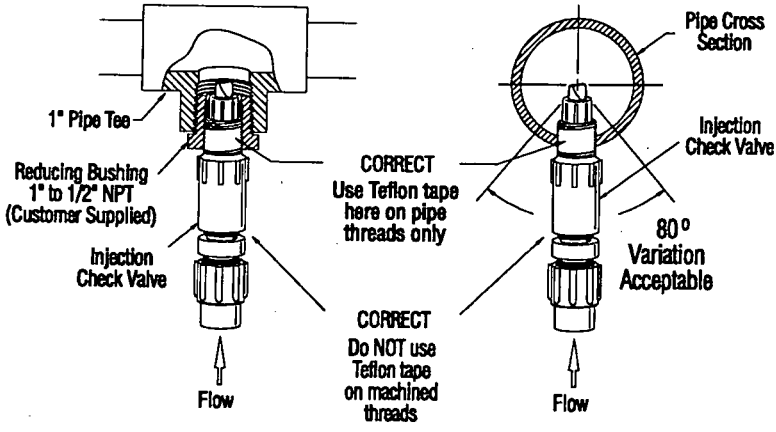

5.0 METHODS OF EXTERNALLY TRIGGERING OR

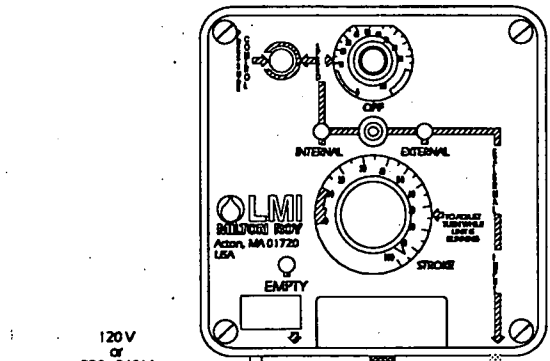

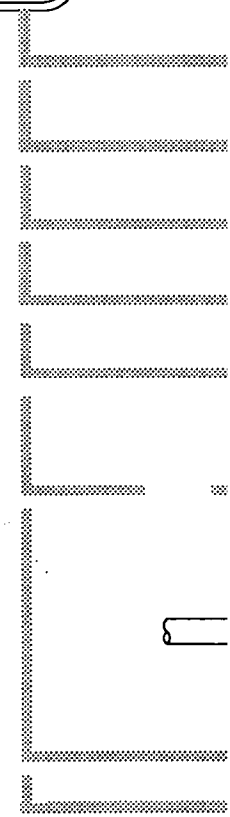

Optional
Low Level
Sensor
Part No. 29190

or
Remote
Start/Stop

Start (Open)

Stop (Closed)

Methods of Triggering Metering (Dosing) Pumps

1. Switch Closure
   Switch closing triggers pump

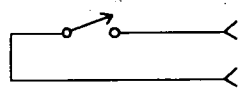

2. NPN Transistor
   Base goes high to trigger pump

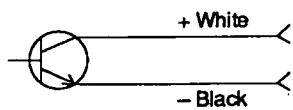

3. PNP Transistor
   Base goes low to trigger pump

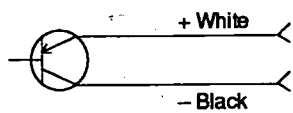

4. Opto Isolator

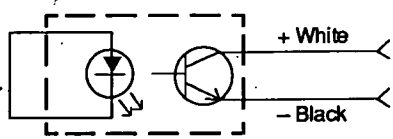

Note:
Switch or transistors must be capable of switching 15V DC at 2 milliamperes. Minimum time in low impedance state (on) is 50 milliseconds. Minimum time in high impedance state (off) is 100 milliseconds.

'ACING A7, B7, C7 AND D7 PUMPS

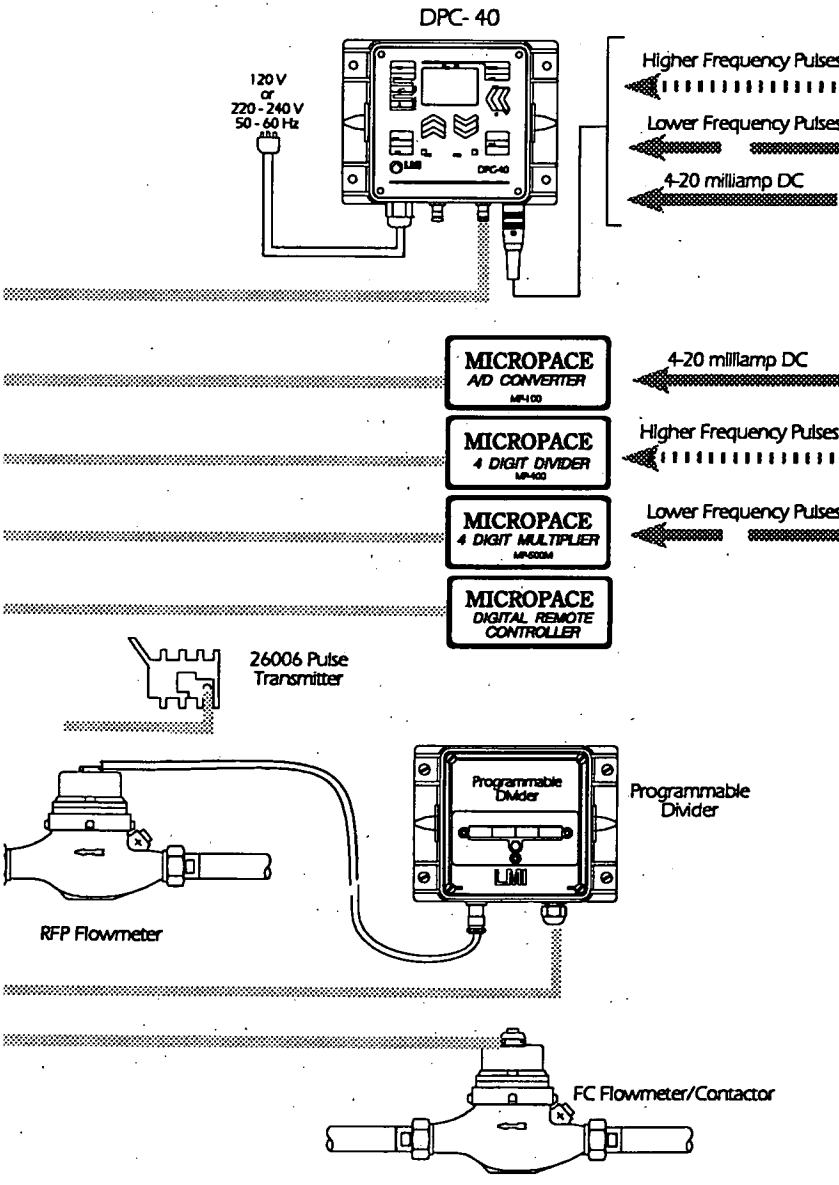

6.0 START-UP and ADJUSTMENT

NOTE: The pump is normally self-priming if suction lift is 5 ft. (1.5m) or less and the steps below are followed.

NOTE: Pumps are shipped from the factory with water in the pump head to aid in priming.

6.1 Output Adjustment Controls

Note: Manual series pumps controls are not equipped with pressure control.

In most external controlled pumps the uppermost set of knobs on the control panel serve a dual purpose. The smallest of these knobs (inner knob of this concentric knob) is Pressure Control. The larger knob directly underneath is Speed Control. Graduation markings for the small Pressure Control Knob are etched in yellow on the Speed Knob itself. Graduations for the Speed Knob appear directly on the face of the control panel. The largest knob below is Stroke Control.

1. Pressure Control Adjustment: Pressure control provides the adjustment of the pump's pressure capability and power consumption, reducing heat, pipe shock and pulsation while increasing pump life. See Section 7.0 after priming for proper adjustment settings.

2. Speed Adjustment: Speed control provides adjustment of the percent of maximum strokes per minute. Turning this knob clockwise ↻ increases stroke frequency.

   Note A7 Series Only: When operating pump in external mode, the speed control knob should be turned fully counter clockwise ↺. A click indicates pump is in external mode.

   Note A34 and A37 Series Only: Pump comes equipped with a range selector switch

which provides high or low speed adjustment. The high setting provides speed adjustments between 8-100 strokes per minute. The low setting provides accurate speed adjustments between 1-12.5 strokes per minute for applications requiring infrequent stroking.

3. Stroke Adjustment: Stroke control provides adjustment of percent of maximum Liquifram® (diaphragm) travel. Turning this knob clockwise ↻ increases percent output per stroke.

6.2 Start-Up/Priming for Pump Supplied with 4-FV

CAUTION: Read this entire section completely before proceeding.

When all precautionary steps have been taken, the pump is mounted, and the tubing is securely attached, you may now start priming the pump.

1. Plug in or switch the pump on.
2. While the pump is running, set the speed knob at 80% and the stroke knob at 100%.

   Note: If the pump is equipped with a pressure control knob, turn knob fully clockwise. ↻
3. If your pump is equipped with a 4-FV, grip both the yellow and black knobs, 1/4 turn or pull and hold open.
4. The suction tubing should begin to fill with solution from the tank.
5. A small amount of solution will begin to discharge out the return line of the 4-FV. Once this happens, 1/4 turn or release the knobs and **SHUT THE PUMP OFF**. (If pump is not equipped with an on/off switch, disconnect the power cord.)

6. The pump is now primed.
7. Proceed to output adjustment, Section 6.4.

   NOTE: If the pump does not self-prime, remove the 4-FV on the discharge side of the pump head. Remove the ball and pour water or solution into the port until the head is filled. Replace valve, then follow start up/priming steps.

6.3 Start-Up/Priming without 4-FV

CAUTION: Read this entire section completely before proceeding.

When all precautionary steps have been taken, the pump is mounted, and the tubing is securely attached, you may now prime the pump.

1. Plug in or switch the pump on.
2. While the pump is running, set the speed knob at 80% and the stroke knob at 100%.

   Note: If the pump is equipped with a pressure control knob, turn knob fully clockwise.
3. The suction tubing should begin to fill with solution from the tank.
4. Once the solution begins to exit the pump head on the discharge side, **SHUT THE PUMP OFF**. (If pump is not equipped with an on/off switch, disconnect the power cord).
5. The pump is now primed.
6. Proceed to output adjustment, Section 6.4.

   NOTE: If the pump does not self-prime, remove the fitting on the discharge side of the pump head. Remove the ball and pour water or solution into the port until the head is filled. Replace valve, then follow start up/priming steps.

6.4 Output Adjustment

Once the pump has been primed, an appropriate output adjustment MUST be made, Pump output should be calculated and adjustments made accordingly.

TOTAL PUMP OUTPUT

Calculate the total output of the pump as follows:

PUMP OUTPUT = MAX PUMP OUTPUT x %SPEED x %STROKE

Example: A151-192S

Use MAX Output (From dataplate on bottom center of pump control panel) = 24 GPD (24 gallons per day).

If the pump is set at 60% speed and 70% stroke length, the approximate pump output is:

24.0 x 0.60 x 0.70 = 10.08 GPD (gallons per day) Divide by 24 (hours in one day) to calculate in gallons per hour

Note: If pump is not equipped with speed adjustment, calculate by **Max Pump Output** x **% Stroke** only.

7.0 CALIBRATION

Once installation is complete and the approximate output has been determined, the pump should be calibrated to adjust speed and stroke for your actual desired output.

1. If equipped, make certain Pressure Control Knob is turned fully clockwise ↻
2. Be sure the pump is primed, and discharge tubing and Injection Check Valve are installed as they would be in normal service (i.e., including factors such as injection pressure, fluid viscosity, and suction lift).

3. Place the Foot Valve in a graduated container with a volume of 1000 ml or more.

4. Plug in and switch pump to Internal Mode. Pump until all the air is exhausted from the suction line and head.

5. Turn the pump off. Refill graduated container to a level starting point.

   NOTE: If pump is equipped with pressure control, see Section 7.1 before proceeding.

6. Using a stopwatch or timer, turn the pump on for a measured amount of time (50 pump strokes minimum). The longer the time period, the more confident you can be of the results. Be sure to count the number of strokes during the calibration period when making comparisons.

7. Turn the pump off. Note the time elapsed in relation to volume displaced in the graduate. Now, calculate the output in the time unit you choose (minutes, hours. days, etc.).

8. If the output is too low or too great, adjust speed and or stroke, estimating required correction and repeat steps 1-7.

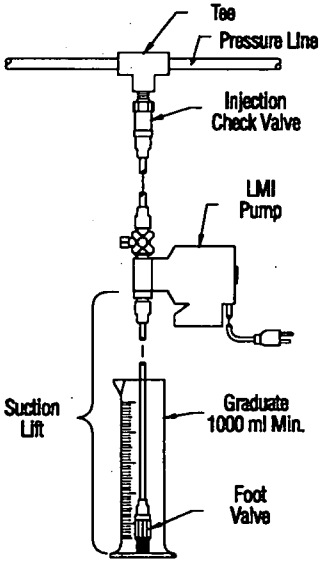

7.1 Pressure Control

Adjust Pressure Control: While unit is running, turn Pressure Control Knob slowly counter-clockwise ↺ until unit just begins to stall. From this stall point, now turn Pressure Control Knob clockwise ↻ from 1 to 1 ½ graduation marks. This is the optimum pressure control setting for your application.

NOTE: Increase setting if back pressure is increased.

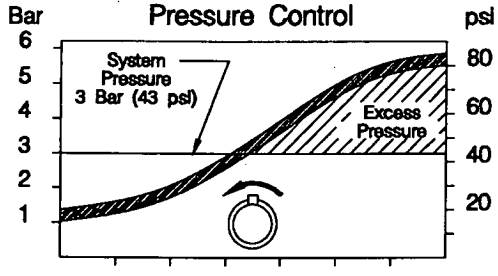

Adjust pressure control to reduce heat, shock, pulsations and prolong pump life.

7.2 Calibration Procedure - On-Site Volumetric Calibration in External Mode

1. Since pump output is governed by an external device such as Flowmeter-Pulser, Liquitron™ Current-to-Frequency Converter or 4-20 mA DC signal from an instrument with an LMI Analog-to Digital Converter, **only the output per stroke may be calibrated.**

2. With pump primed and discharge tubing connected to the injection point as it would be in normal service, place Foot Valve and Strainer Assembly in a graduated container with a volume of 500 ml or more.

3. Switch pump to **Internal** mode with Speed Knob set at 100 until air is exhausted from suction line and pump head.

4. **Adjust Pressure Control** - See Section 7.1.
5. Switch pump **OFF** and note solution level in graduated container. Refill graduate to a starting point.
6. Switch pump **ON** and **count the number of strokes** for exactly one minute. Then switch pump **OFF**.
7. Note volume pumped during the calibration period of one minute. Divide into this the number of strokes to determine the volume of solution pumped per stroke.

   Example: 500 ml in 100 strokes = 5.0 ml per stroke.

   Multiply this by your expected stroke rate per minute, per hour or per day and compare with desired output requirements.
8. Adjust Stroke Length Knob (lower knob) to your best estimate of required correction and repeat calibration procedure.

8.0 SPARE PARTS REPLACEMENTS ROUTINE MAINTENANCE

8.1 Depressurizing the Discharge Line (For Pumps Equipped with a 4-FV only).

WARNING: ALWAYS wear protective clothing, face shield, safety glasses and gloves when performing any maintenance or replacement on your pump.

WARNING: Read steps 1 and 2 below before proceeding.

1. Be sure the Injection Check Valve is properly installed and is operating. If a shut off valve has

been installed downstream of the Injection Valve, it should be closed to off.

WARNING: Be sure your relief tubing is connected to your 4-FV and runs back to your solution drum or tank.

2. 1/4 turn or pull on both the yellow and black knobs on the 4-FV. The discharge line is now depressurized. Keep valve open until solution drains back down the discharge tubing into solution drum or tank. Then release or 1/4 turn knobs to normal position.

8.2 Liquifram® (Diaphragm) Replacement

WARNING: ALWAYS wear protective clothing, face shield, safety glasses and gloves when working near or performing any maintenance or replacement on your pump. See MSDS Sheet from solution supplier for additional precautions.

LMI metering pumps are designed for trouble-free operation, yet routine maintenance of elastomeric parts is essential for optimum performance. This involves replacing the Liquifram® seal rings, valve balls, and the Injection Check Valve spring. LMI recommends replacing these parts at least once a year, however, frequency will depend on your particular application.

When replacing the Liquifram®, the valve balls, seal rings and the injection check valve spring should also be replaced. See next section (8.3). A Spare Parts Kit (SP-#) containing these parts may be obtained from your local distributor. (See the Liquid Handling Assembly Sheet for Spare Parts Kit Part Number).

1. Carefully depressurize, drain, and disconnect the discharge line (See Section 8.1 in this manual). Place the Foot Valve into a container of water or other neutralizing solution. Turn the pump on to flush the head assembly. Once the pump head has been flushed, lift the Foot Valve out of the solution and continue to pump air into the pump head until the pump head is purged of water or neutralizing solution.

   Note: If the liquid cannot be pumped due to Liquifram® rupture, using protective gloves, carefully disconnect the suction and discharge tubing. Remove the four screws to the head and immerse the head in water or other neutralizing solution.

2. Start the pump. While running, set the stroke knob to zero and turn the pump off.

   NOTE: See Section 9.0 for proper zeroing.

3. With the unit off, unscrew the Liquifram® by carefully grasping the outer edge of the Liquifram® and turning it counter clockwise ↺. Discard old Liquifram® . Remove the Liquifram® disk if so equipped (located behind the Liquifram®) and check that the size code matches the size code on the replacement Liquifram® (see illustration).

4. Reinstall the disk so the alignment pin on the disk (if present) seats in the recessed hole in the EPU.

WARNING: Take care not to scratch the Teflon face of the new Liquifram® .

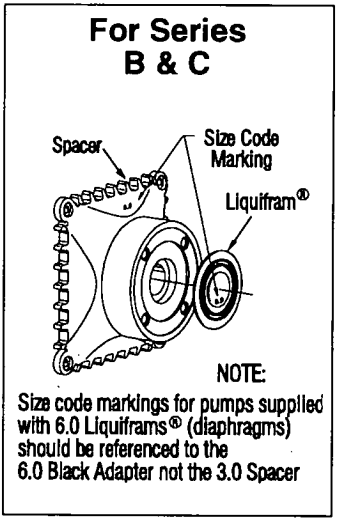

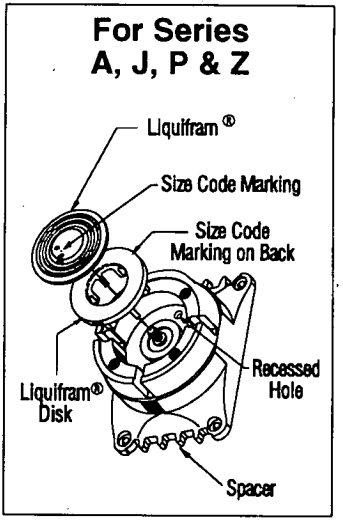

5. Start the pump and turn the stroke knob to the setting indicated below on Stroke Setting Chart which matches the pump model number located on the pump dataplate. With the pump stroking (running), screw on the new Liquifram® clockwise until the center begins to buckle inwards. Stop the pump.

Liquifram® Stroke Setting Chart

Pump Series	Stroke Knob Setting
All A, J, P, Z Series B11, B71, B12, B14, B72, B13, B73, B74 D11, D71, D12, D72, D10, D70 C11, C71, C12, C72, C10, C70, E50, E51, E52	90%
All L Series	85%
C13, C73, C77 D13, D73 E53	70%
D14, D74 C14, C78 E54	50%
All U and M Series	100% but Liquifram® must be bottomed completely. **Do Not Use Straight Edge.**

6. Grasp the outer edge of the Liquifram® and adjust by screwing it in or out so that the center of the Liquifram® is flush with the outside of the spacer edge (see illustration).

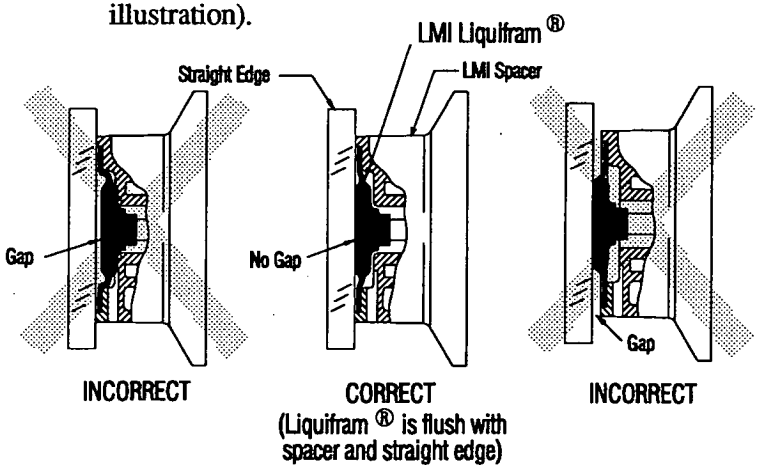

7. Once the Liquifram® is properly positioned, remount the pump head to the spacer using the four (4) screws. Tighten in a crisscross pattern. After one week of operation, recheck the screws and tighten if necessary.

8.3 Seal Ring, Ball and Injection Check Valve Spring Replacement

WARNING: ALWAYS wear protective clothing, face shield, safety glasses and gloves when working on or performing any maintenance or replacement on your pump. See MSDS Sheet from solution supplier for additional precautions.

1. Refer to the Liquid Handling Assembly Sheet included with your pump for the proper Spare Parts Kit number. (SP-#)

2. Carefully depressurize and disconnect the discharge line (See Section 8.1 in this manual). Place the Foot Valve into a container of water or other neutralizing solution. Turn the pump on to flush the head assembly.

Once the pump has been flushed, lift the Foot Valve out and continue to pump to let air into the pump head until pump is purged of water or neutralizing solution.

If the liquid cannot be pumped due to Liquifram® rupture, with protective gloves, carefully disconnect the tubing and four screws to remove the head. Immerse the head in water or other neutralizing solution.

IMPORTANT: Before disassembling valves, note the orientation of seal ring and ball. (See illustration)

3. Carefully disconnect one tubing connection and fitting at a time and remove the worn seal ring and ball.

   Carefully loosen sealing by prying side to side using a small screw driver through the center hole of the seal ring.

4. Install new seal ring and ball in each location. **IMPORTANT**: Note correct orientation.

5. Install the new spring in the Injection Check Valve.

WARNING: Depressurize and drain pipeline (or isolate I.C.V. point using valves) so that I.C.V. can safely be disassembled.

(Refer to Liquid Handling End Sheet for proper assembly orientation.)

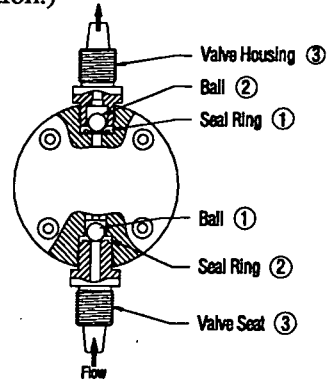

Order f Installation

Note: Order of assembly changes depending on valve location

9.0 CHECKING PUMP FOR PROPER ZEROING (STROKE KNOB)

1. With pump running, turn stroke knob counter clockwise toward zero or end of black or red band.
2. LISTEN to the clicking as the pump is running. The pump should operate quietly at the zero position (no clicking).
3. If the pump continues to click at zero or stops clicking before zero is reached, the pump zero must be reset. (See Section 9.1 or 9.2)

9.1 Type I - Push on Knob

Rezeroing and Stroke Knob Disassembly and Assembly

1. Remove stroke knob from the pump by grasping the knob firmly and pulling it toward you.
2. Pry off the yellow cap.
3. Place the knob on a flat surface.
4. Using needle nose pliers, squeeze the inner section together while lifting the outer section up.
5. Push the inner section back onto the "D" shaped stroke shaft.
6. With the pump running, zero the pump by turning the inner section of the knob counter clockwise until the pump stops clicking.
7. Position the outer section of the knob so that the pointer aligns with zero on the nameplate or end of the black or red band.
8. Push down on the outer section (a snap sound indicates parts are locked together).
9. Replace the yellow cap over the outer section of the knob, aligning the tabs on the cap with the slots inside the knob.

Str ke Knob Assembly (Type I)

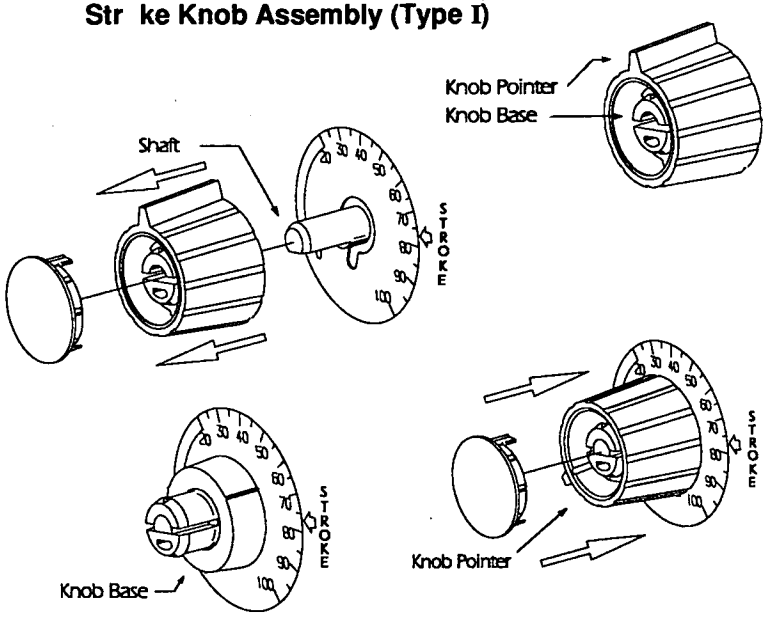

9.2 Type II Collet Knob

Rezeroing and Stroke Knob Disassembly and Assembly

1. Remove Yellow Cap.
2. Hold knob with soft jaw pliers.
3. Disconnect knob by loosening 5/16" (8 mm) collet nut. There is no need to remove nut.
4. Remove knob by pulling towards you.
5. With pump running, zero the pump using a screw driver to turn the stroke shaft counter-clockwise ↺ until the pump just stops clicking.
6. Pump is now zeroed.
7. Position knob at zero, or the end of the low range band, and tighten 5/16" (8 mm) collet nut).
8. Replace yellow cap.

10.0 TROUBLESHOOTING

PROBLEM	POSSIBLE CAUSE
Pump Will Not Prime	1. Pump not turned on or plugged in.
	2. Output dials not set properly.
	3. Foot Valve not in vertical position on bottom of tank.
	4. Pump suction lift too high.
	5. Suction tubing is curved or coiled in tank
	6. Fittings are over tightened.
	7. Air trap in suction valve tubing.
	8. Too much pressure at discharge. (Pumps without 4-FV)
Pump Loses Prime	1. Solution container ran dry
	2. Foot Valve is not in a vertical position on the bottom of the tank.
	3. Pump suction lift is too high.
	4. Suction tubing is curved or coiled in tank.
	5. Fittings are overtightened.
	6. Air trap in suction valve tubing.
	7. Air leak on suction side.

	SOLUTION
	1. Turn on pump/plug in pump.
	2. Always prime pump with speed at 80% and stroke at 100%.
	3. Foot Valve must be vertical (See Foot Valve Installation, Section 4.6).
	4. Maximum suction lift is 5 ft. (1.5 m) Pumps with High Viscosity Liquid Handling Assemblies require flooded suction.
	5. Suction tubing must be vertical. Use LMI tubing straightener supplied with pump. (See Section 4.6)
	6. Do not overtighten fittings. This causes seal rings to distort and not seat properly which causes pump to leak back or lose prime.
	7. Suction tubing should be as vertical as possible. AVOID FALSE FLOODED SUCTION! (See Section 4.2A)
	8. Shut off valves in pressurized line. Disconnect tubing at injection check valve (See priming Section 6.0). When pump is primed, reconnect discharge tubing.
	1. Refill container with solution and reprime (See Section 6.0)
	2. Foot Valve must be vertical (See Foot Valve Installation, Section 4.6).
	3. Maximum suction lift is 5 ft. (1.5 m). Pumps with High Viscosity Liquid Handling Assemblies require flooded suction.
	4. Suction tubing must be vertical. Use LMI tubing straightener supplied with pump. (See Section 4.6)
	5. Do not overtighten fittings. This causes seal rings to distort and not seat properly which caused pump to leak back or lose prime.
	6. Suction tubing should be as vertical as possible. AVOID FALSE FLOODED SUCTION! (See Section 4.2A)
	7. Check for pinholes, cracks. Replace if necessary.

TROUBLESHOOTING (continued)

PROBLEM	POSSIBLE CAUSE
Leakage at tubing	1. Worn tubing ends.
	2. Loose or cracked fitting.
	3. Worn seal rings.
	4. Solution attacking Liquid Handling Assembly material.
Low Output or Failure to Pump Against Pressure	1. Pump's maximum pressure rating is exceeded by injection pressure.
	2. Worn Seal Rings.
	3. Ruptured Liquifram®.
	4. Incorrect stroke length.
	5. Tubing run on discharge may be too long.
	6. Clogged footvalve strainer.
Failure to Run	1. Pump not turned on or plugged in.
	2. EPU failure.
	3. Pulser failure.
Excessive Pump Output	1. Syphoning. (Pumping downhill without a 4-FV).
	2. Little or no pressure at injection point.
	3. Excessive strokes per minute.

	SOLUTION
	1. Cut tubing about 1 inch (25 mm) off tubing and then replace as before.
	2. Replace fitting if cracked. Carefully hand tighten fittings. Do not use pipe wrench. Once fitting comes into contact with seal ring, tighten an additional 1/8 or 1/4 turn.
	3. Replace balls and seal rings. (See Section 8.3) Spare Parts (SP-#)
	4. Consult LMI or your local distributor for alternate materials.
	1. Injection pressure cannot exceed pump's maximum pressure. See pump data plate.
	2. Worn seal rings may need replacement. (See Section 8.3) Spare Parts (SP-#)
	3. Replace Liquifram®. (See Section 8.2)
	4. Check zero on pump/Re-zero pump. (See Section 9.0)
	5. Longer tubing runs may create frictional losses sufficient to reduce pump's pressure rating. Consult factory for more information.
	6. Remove footvalve strainer when pumping slurries or when solution particles cause strainer to clog.
	1. Turn on or plug in pump.
	2. Disassemble pump and measure the resistance of the EPU across the EPU wires. Resistance reading should be in accordance to the table (See Section 11.0). Also check EPU leads to ground. Consult supplier or factory.
	3. The pulser should be replaced if EPU checks out OK. Consult supplier or factory.
	1. Move injection point to a pressurized location or install an LMI 4-FV. (See Section 4.4)
	2. If pressure at injection point is less than 25 psi, an LMI 4-FV should be installed. (See Section 4.4)
	3. Replace pulser or resistor. Consult factory.

11.0 EPU RESISTANCE CHART

Pump Series	Voltage	Coil Resistance (Ohms) * @ 20°C (68° F)
A14, A15, A16, A34, A74, A75, A76 A94, A95, A96 J02, J03, J04 , J05, J06 J13, J15, J16 PW4, PW5, PW6 P04, P05, P06 P14, P15, P16 U01, U02, U03	115 VAC	76 - 87
	230 VAC	307 - 353
A17, A37, A77, A97, A18, A78 Z14, Z15 P02, P03 P12, P13	115 VAC	152 - 176
	230 VAC	583 - 671
J54D, J55D, J56D	12 VDC	1.1 - 1.3
D10, D11, D12, D13, D14 D70, D71, D72, D73, D74 E50, E51, E52, E53, E54	115 VAC	25.7-29.6
	230 VAC	97 - 112
B11, B12, B13, B14 B71, B72, B73, B74	115 VAC	43 - 49
	230 VAC	167 - 193
C10, C11, C12, C13, C14 C70, C71, C72, C73, C74	115 VAC	22.8 - 26.2
	230 VAC	91 - 105
C77, C78	115 VAC	14.4 - 16.6
	230 VAC	57.7 - 66.3

* EPU checked within 10 hours of operation can increase coil resistance reading as much as 20%

Compressors, dryers and pumps
systems and service

Kentrol Inc

compressor and pump division

Post Office Box 219, Waterville, Maine 04903-0219

207 873-7741 FAX 207 873-2945

THE INSCO GROUP

Quality Starts Here

SERIES L
METERING PUMPS

INSTRUCTIONS
MAINTENANCE
SERVICE

WARNING

A PRESSURE RELIEF VALVE WITH A RELIEF PRESSURE OF 150 psi MAXIMUM AND A RELIEF FLOW (BLEED) RATE OF 4 GPM MINIMUM MUST BE INSTALLED IN THE DISCHARGE LINE OF THIS PUMP. Discharge piping should have a minimum burst pressure of 600 PSI. Failure to provide pressure relief may result in failure modes dangerous to the system, associated piping, the pump itself and operating personnel.

For file reference, please record the following data:

Model Number:_____

Serial Number:_____

Installation Date:_____

Installation Location:_____

When ordering replacement parts for your LMI Metering Pump or accessory, please include complete model number and serial number of your unit.

LMI
LIQUID METRONICS DIVISION
MILTON ROY

8 Post Office Square
Acton, MA 01720 U.S.A
TEL (508) 263-9800
FAX (508) 264-9172

Bulletin Sec. 6.0, pg 1600
Replaces same of 3/91
1230.F 7/94

I. UNPACKING

A. Unbolt pump from plywood skid. Remove optional accessories and inspect everything for shipping damage. Notify delivery carrier immediately if there are any signs of damage to contents.

B. Series L4 and L8 Current to Frequency Control Unit is shipped complete with 10 feet of input cable, stripped 1/2" for connection to 4-20 milliamp input signal; 10 feet of output cable with mating connector for connection to pump clutch and a 6 foot power cord with 3 prong plug for connection to 115VAC electrical source.

C. LMI Series L7 Control Unit is packaged complete with 11 feet of output cable and connector for direct hook up to pump clutch, and 5 feet of power cord for connection to 115VAC power source. A clear plastic cover is held to the unit with two thumb screws and protects the controls.

II. PUMP PREPARATION

A. Pump Lubrication

Before operating the pump, check oil drain plug for tightness, then fill unit with 2.0 US quarts (2.1 liters) of SAE/10W (or 10W-40) motor oil. When full, the oil level should be visible at the top of the oil level gauge next to the stroke adjustment knob. Replace filler plug before operating the unit.

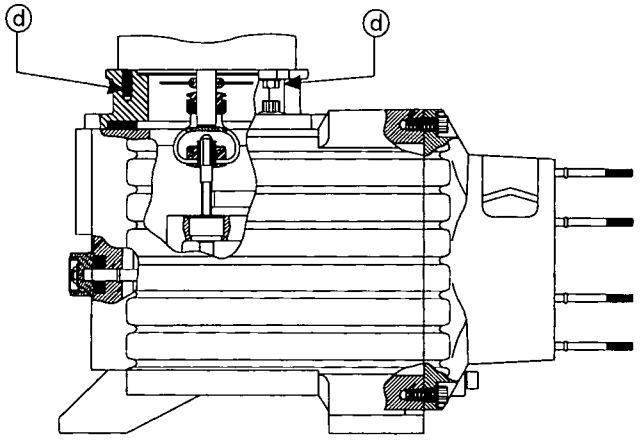

Figure 1

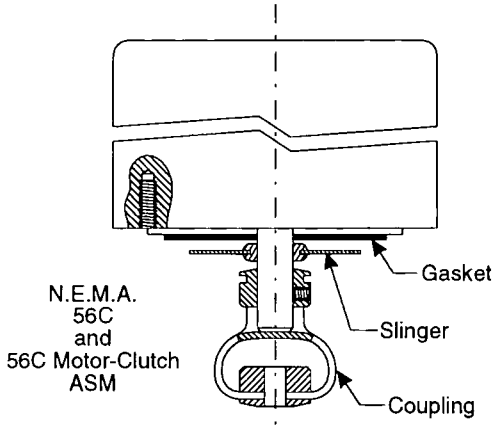

Figure 1A

B. Motor Mounting

"L" series pumps are available with motors of different voltages, frame styles, enclosure types and number of phases. regardless of motor type, however, shaft rotation must be counterclockwise when viewed from the shaft end (or clockwise when viewed from the cooling fan end). If motor rotation is incorrect, please refer to motor data plate or motor manufacturers instructions for reversing.

C. Motor Removal/Installation

a. Remove four bolts retaining the motor to the motor adapter (3/8-16 bolts for 56C motor, 5/16-18 bolts for 71 frame). (See Fig. 1, Part d.)
b. Lift off motor assembly.

A motor can be installed using the reverse procedure with the following additions:
a. Position slinger (see Figs. 1A and 1B) on motor shaft.

NOTE:
Slinger is not used on L4, L8, or L7 Series pumps.

b. Install the coupling on the motor shaft (see Figs.1A and 1B). Tighten coupling setscrew against shaft flat or into shaft keyways.
c. Install LMI Part No. 26189 (Gasket) between the motor and the motor adapter. In addition, Part no. 26182 ("O" Ring) must be installed over the motor alignment diameter on the 71 frame motor (see Fig. 1B).

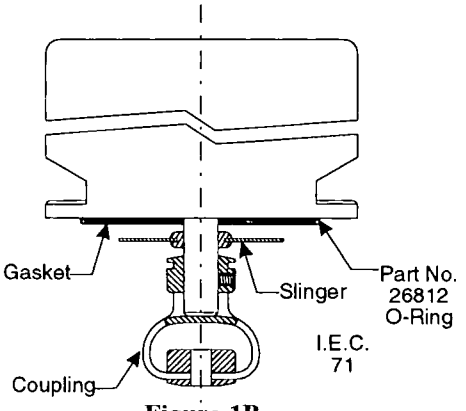

Figure 1B

d. Before the motor-coupling assembly is mounted on the pump, the input shaft (see Fig. 2) must be rotated by hand until the shaft flat faces the knob-end of the pump. The motor and coupling is slipped over the input shaft such that the coupling flat is over the shaft flat.

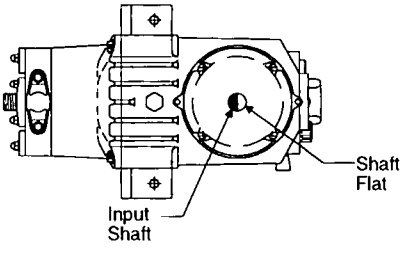

Figure 2

e. Tighten motor mounting bolts with washers.
f. To change motor frame type from the type designated or supplied (example: 48N to 56C or 71 frame), please consult the factory.

III. LOCATION AND OPERATING CONDITIONS

For best results, ambient temperature must not exceed 130 degrees F (59 degrees C).

A. The LMI "L" Series metering pump requires the following mounting conditions for successful operation:

1. Unit must be mounted level.

2. The surface must be able to support the unit's weight which can be approximately 85 lbs (depending on options).

3. For best results, the pump should be secured to the mounting surface using three .500 inch diameter fasteners.

B. Series L4, L7 and L8

1. Mount the Liquitron L4, L7 or L8 Converter on a wall or post at eye level, away from solution tank, in an area that is preferably not more than 10 feet (3m) away from the pump and convenient to electrical supply and input signal source. If additional distance between pump and converter is required, extension cables may be purchased separately. These Converters have corrosion resistant housing but should not be subjected to excessive temperatures (over 130 degrees F or 59 degrees C), solution spray, very high humidity or weather.

IV PLUMBING CONFIGURATION

A. "L" Series pumps may be configured with either flooded suction or suction lift type configurations. Figures 3 and 4 depict both types:

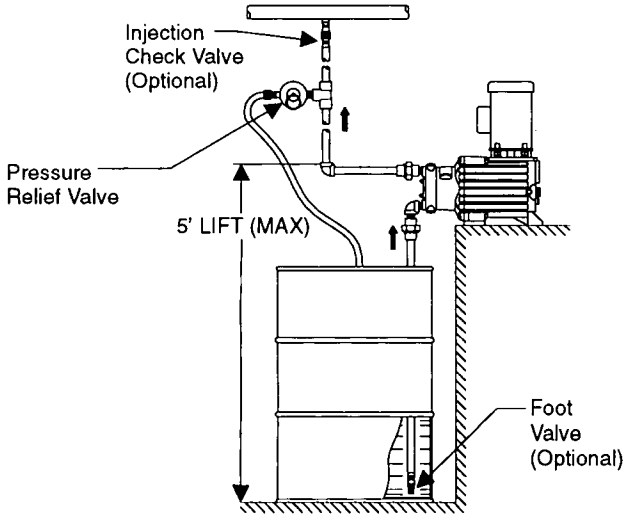

TYPICAL SUCTION LIFT INSTALLATION

Figure 3

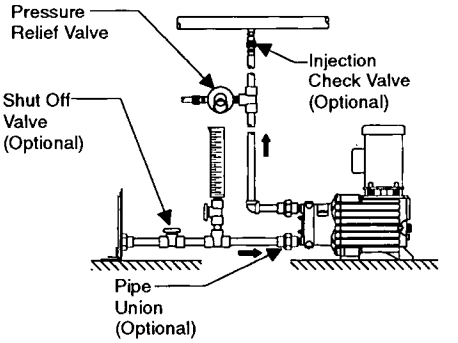

TYPICAL FLOODED SUCTION INSTALLATION

Figure 4

B. Fluid Connections

"L" Series metering pumps are equipped with 3/4 NPT Male connections for both suction and discharge. Schedule 80 3/4" pipe should be used for plumbing and the following precautions should be taken:

1. Pressure test all plumbing before use to guard against leaks.
2. Prevent thread sealant from getting inside the plumbing.
3. Install a shut off valve in the suction side of the flooded suction installations to simplify maintenance.
4. A foot valve should be used in suction lift installations to insure ease of priming (see Figure 3).
5. A pressure relief valve with a relief pressure of 150 PSI maximum and a relief flow (bleed) rate of 4 GPM minimum (see Figs 3 & 4) must be installed in the discharge line of this pump. Discharge piping should have a minimum burst pressure of 600 PSI. Failure to provide pressure relief may result in failure modes dangerous to the system, associated piping, the pump itself and operating personnel.

C. Electrical
Series L4 and L8 (See Wiring Diagrams on pg. 4)

CAUTION
BE SURE THE CONVERTER POWER SWITCH IS IN THE OFF POSITION BEFORE PROCEEDING

1. The power cord of the converter must be plugged into a 3-prong grounded 115VAC electrical outlet.
2. Connect input cable to current signal source of 4-20 mA DC. polarity is as follows:
   white lead +
   black lead-
3. Output cable is equipped with mating connector for connection to pump clutch. Push connectors from output cable and clutch together and tighten.

Series L7 (See Wiring Diagram on pg 5)

1. The power cord of the control unit should be plugged into a 3-prong grounded 115VAC electrical outlet.
2. Insert 4-prong connector socket from the flowmeter cable into the external input jack of the control unit and tighten the coupling nut.
3. In the same manner, connect the cable of the control unit to the Series L7 clutch.

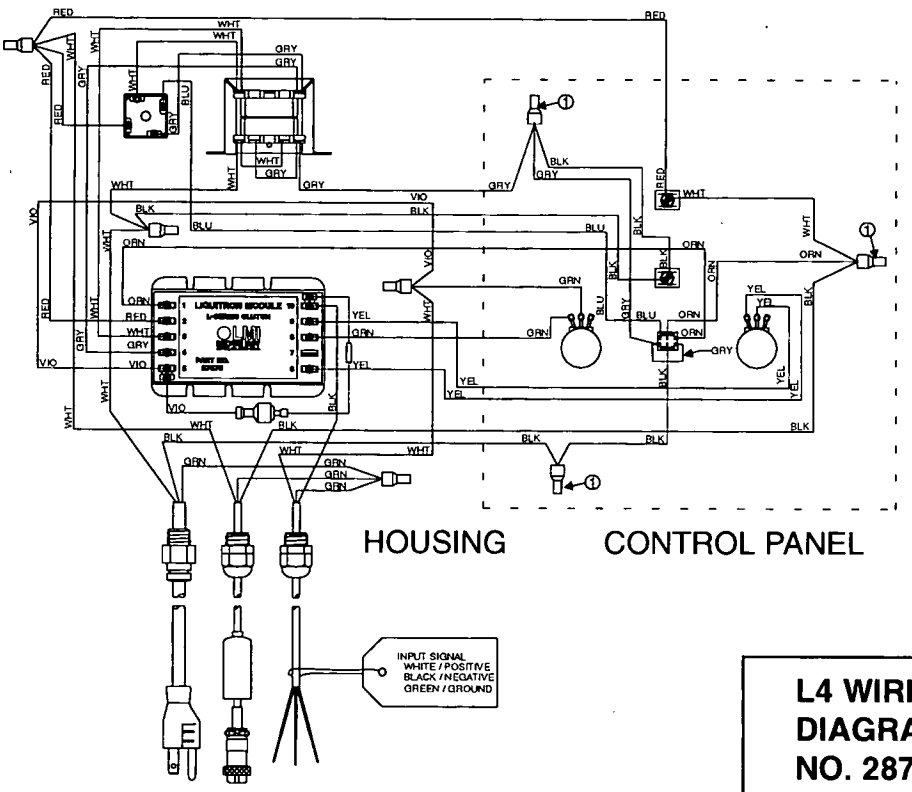

L4 WIRING DIAGRAM NO. 28756 DIRECT

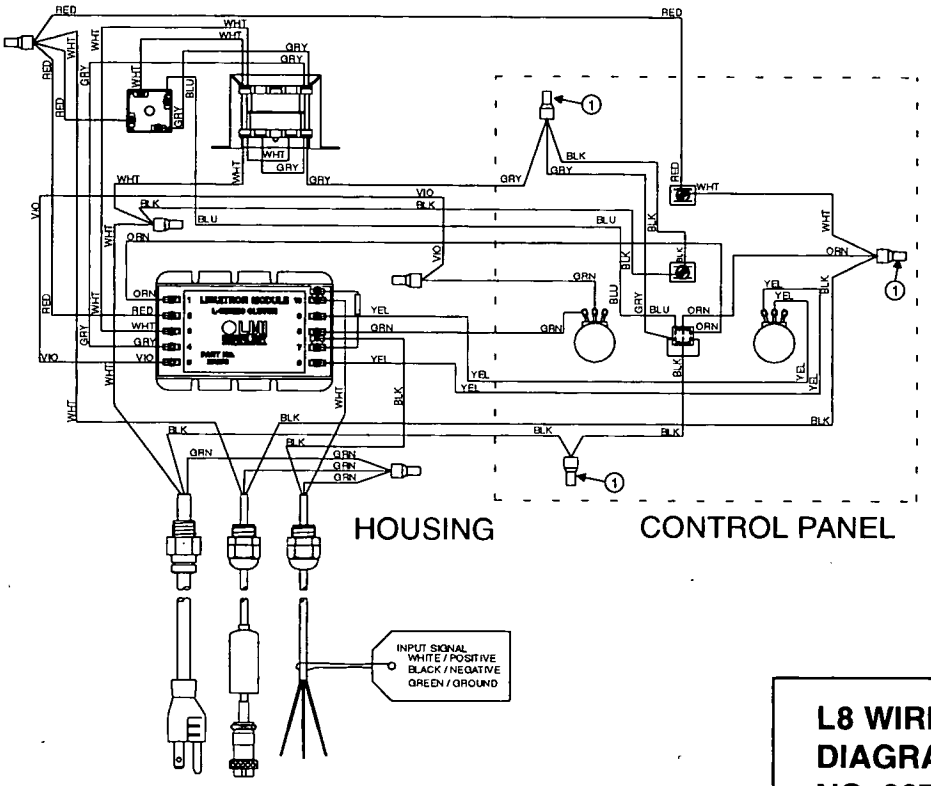

L8 WIRING DIAGRAM NO. 28767 INVERSE

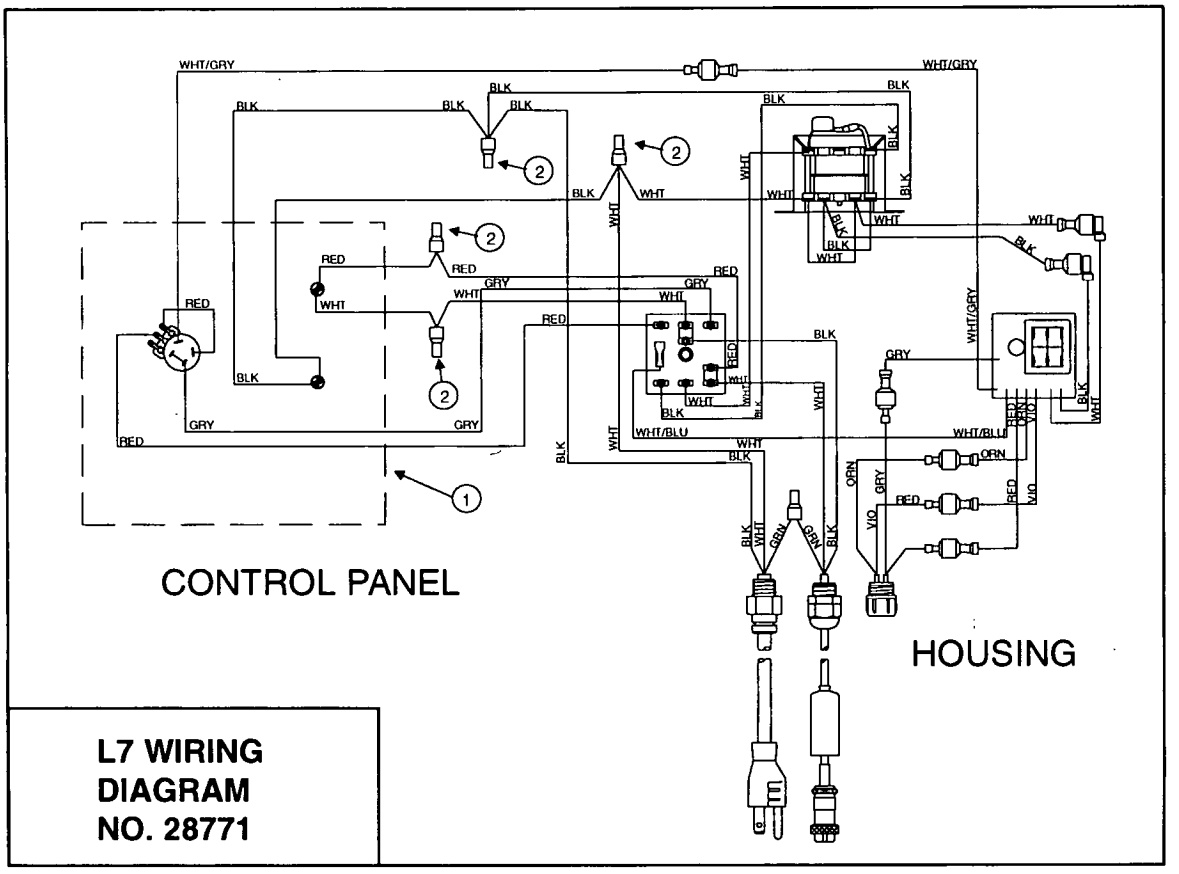

L7 WIRING DIAGRAM NO. 28771

V. PUMP OPERATION SERIES L1 AND L2

A. Priming

"L" Series pumps are shipped from the factory with water in the pump head to assist priming. Priming can be done only against atmospheric pressure when using a suction lift configuration. Flooded suction installations will allow the unit to prime itself under pressure. Set pump stroke knob to 100% output to prime.

In all cases, priming will be assisted be releasing or reducing pressure on the pump discharge.

B. Output Adjustment

Pump output is adjusted using the stroke knob located at the rear of the pump. After stroke knob adjustment, the lock knob holds the shaft to prevent setting change. Before adjusting the pump, the lock knob should be loosened and the pump should be running. The dial under the knob represents "% of total output" and provides accurate output adjustment above the 10% setting. The maximum output position is reached by turning the knob 360 degrees clockwise from this point with the unit running.

C. Calibration

1. The pump is best calibrated after installation is complete (including injection pressure, fluid viscosity and suction lift).
2. Set initial stroke output adjustment.
3. Using a graduated container of sufficient volume, measure the displacement of fluid over time, counting the number of pump strokes.
4. Note the time elapsed in relationship to the volume displaced.
5. Calculate the amount displaced in volume per stroke.

NOTE:

1/4 HP motors will have a maximum of 72 strokes per minute.
1/2 HP motors will have a maximum of 144 strokes per minute.
in all cases, output per stroke is adjustable between 3 to 30 ml per stroke.

6. After calibration results, adjust stroke knob setting to increase or decrease output.

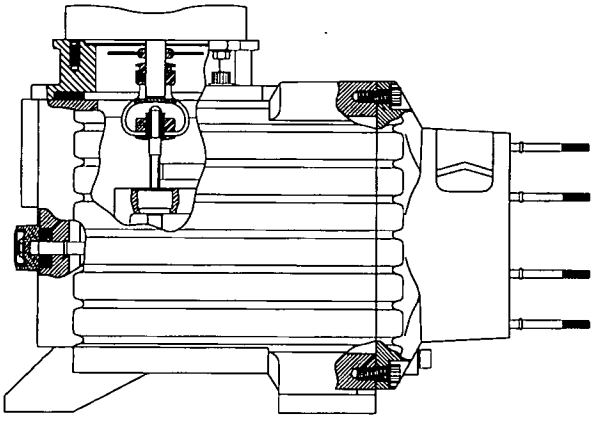

Figure 5

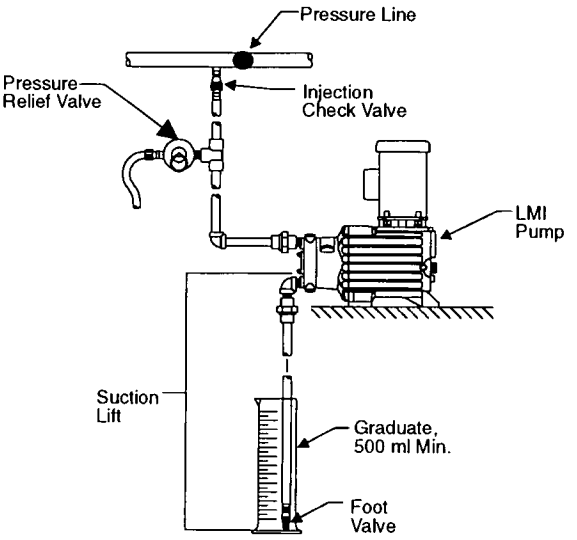

Figure 6

VI PUMP OPERATION--SERIES L4 & L8

A. General

L4 and L8 pumps provide manual stroke length adjustment and 4-20 mA frequency adjustment. These two methods achieve desired output.

STROKE: The stroke knob allows manual adjustment from 10% to 100% of the pump's rated output (See Section V, part B.)

FREQUENCY: The Liquitron current-to-frequency converter provides linear response to a 4-20 mA signal based on fixed span and zero adjustments. Frequency is controlled by the amount of time the motor clutch is engaged. Decreasing the time the clutch is engaged decreases output. Increasing the time the clutch is engaged increases output.

L4: Provides direct response; output increases as milliamp response increases.

L8: Provides inverse response; output increases as milliamp response decreases.

MAN-OFF-AUTO: The manual-off-automatic switch provides mode selection of pump operation.

MAN: This mode powers the converter to operate the pump at maximum stroke frequency, regardless of input 4-20 mA signal. (MAN mode should be used when priming.)

OFF: This mode interrupts electrical power to the Liquitron CTF Converter.

AUTO: This mode powers the converter to operate the pump based on the incoming 4-20 mA signal.

ZERO ADJUSTMENT (Point 1): The zero knob adjusts the milliamp signal level at which the converter begins to operate. This is Point 1.

SPAN ADJUSTMENT: Once the zero point has been set, the span knob adjusts the second point (2) to provide desired pump output at a desired milliamp signal level. Pump output increases and decrease based on an increase or decrease of the milliamp input signal along a line determined by these two points.

B. System Adjustment L4 and L8

1. Stroke Setting:

   Determine desired maximum pump output in gallons per hour (G.P.H.), then divide by rated maximum pump output.

   Example:

   Required maximum output=27 G.P.H.
   Rated maximum pump output=35 G.P.H

   $$\frac{27\text{G.P.H.}}{35\text{G.P.H.}} = 77\%$$

   This would be the maximum percent output at the maximum frequency.

   NOTE:
   60% is a recommended minimum initial stroke length setting for applications requiring less than 50% of the rated pump output. 60% allows flexilbility in later adjustments. Therefore, set stroke length to 60% if required output is less than 60% and correct with frequency adjustment.

2. % Zero Setting:

   Set zero point (1) by selecting the % knob setting in relationship to the required milliamp input. Use converter setting chart to determine % knob setting or by the following:

   $$\frac{\text{mA Value}}{4} \text{ For L4} \qquad \frac{\text{mA Value}}{20} \text{ For L8}$$

   For L4 to have zero output at 4mA, the zero% should be set to 100%.

   Example: $$\frac{4\text{ mA}}{4\text{ mA}} = 1.00 \text{ or } 100\%$$

   For L8 to have zero output at 20mA, the zero % should be set to 100%.

   Example: $$\frac{20\text{ mA}}{20\text{ mA}} = 1.00 \text{ or } 100\%$$

3. % Span Settings

   Set span point (2) by selecting the % knob setting in relationship to the required output over a milliamp range from point (1). Pump response is determined by a line between these points.

   Use the converter setting chart to determine % knob setting.

   Example: For L412-40
   Required Zero Setting: 4mA
   Required Span Setting: 20mA

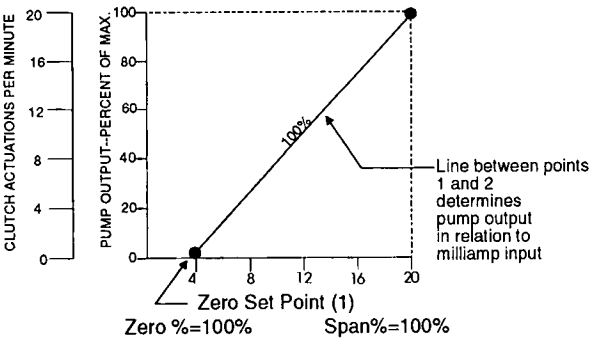

CURRENT TO FREQUENCY CONVERTER SETTINGS

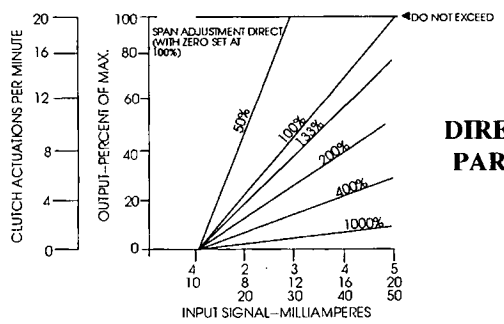

DIRECT ACTION
PART NO. 28756

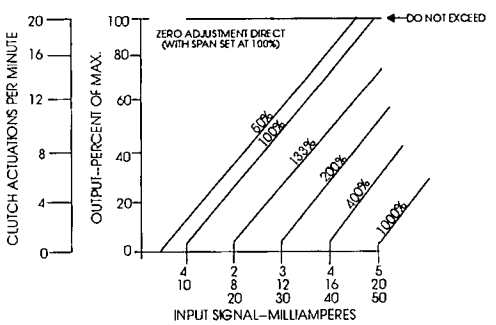

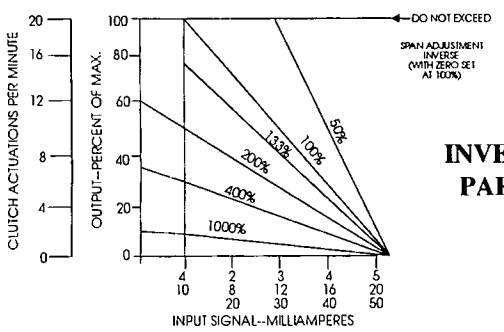

INVERSE ACTION
PART NO. 28767

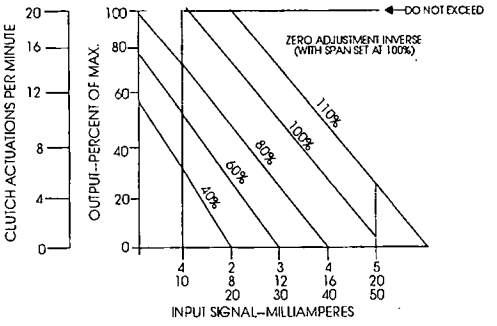

D. System Adjustment Exampl s:

Certain systems require emphasizing pump output per cycle or pump output frequency. However, a general starting method could be as follows for both the L4 and L8 Series.

1. Determine required maximum flow from the L Series pump in G.P.H., then divide by rated maximum pump output.
2. Set Stroke Length Control to proper percent.
3. Determine where the zero point and span point should be adjusted for the particular system.
4. Set Current-To-Frequency Control Unit (ZERO and SPAN).

NOTE:

The method described above suggest adjusting the stroke length to achieve ***desired maximum*** *pump output (assuming maximum frequency range requirement. if the result from above is less than 50%, for optimal performance and flexibility the stroke length should be set to 60% and % maximum frequency reduced proportionally.*

EXAMPLE B

L412-40 rated maximum output = 35 GPH
Required output (max) = 14 GPH
Required ZERO Point = 7 mA
Required maximum mA signal = 20 mA

1. Stroke length setting

$$\frac{14\text{ GPH}}{35\text{ GPH}} = 40\%$$

However, 60% is a recommended minimum initial stroke length setting for applications requiring less than 50% of rated output. 60% setting allows flexibility in later adjustments. Therefore, set the stroke length to 60% (not 40% as calculated), and correct with maximum frequency adjustment.

$$\%\text{ of maximum frequency} = \frac{14\text{GPH}}{(0.6)(35\text{GPH})} = 67\%$$

2. Set ZERO adj.: $\dfrac{\text{*Point 1 (required mA starting point)}}{4\text{mA}} = \%$ (percent) zero setting

3. Set SPAN adj.: $\dfrac{20\text{mA}-\text{*Point 1}}{16\text{mA}} = \boxed{} \div 667 = \%$ (percent) span setting

EXAMPLE:

Set ZERO adj: $\dfrac{\text{*7mA (point 1)}}{4\text{mA}} = 175\%$

Set SPAN adj: $\dfrac{20\text{mA} - \text{*7mA (point 1)}}{16\text{mA}} = \boxed{.8125} \div .667 = 122\%$

VII. PUMP OPERATIONS SERIES L7

A. C ntr ls

The panel of the Control unit has a stroke light which flashes on each time the pump strokes, both in INTERNAL mode and in EXTERNAL mode, and acts as a visual aid. The POWER light indicates a power on or power off condition. The dial knob controls pump speed when in INTERNAL mode and allows you to switch to EXTERNAL mode when turned counterclockwise to the 6 o'clock position.

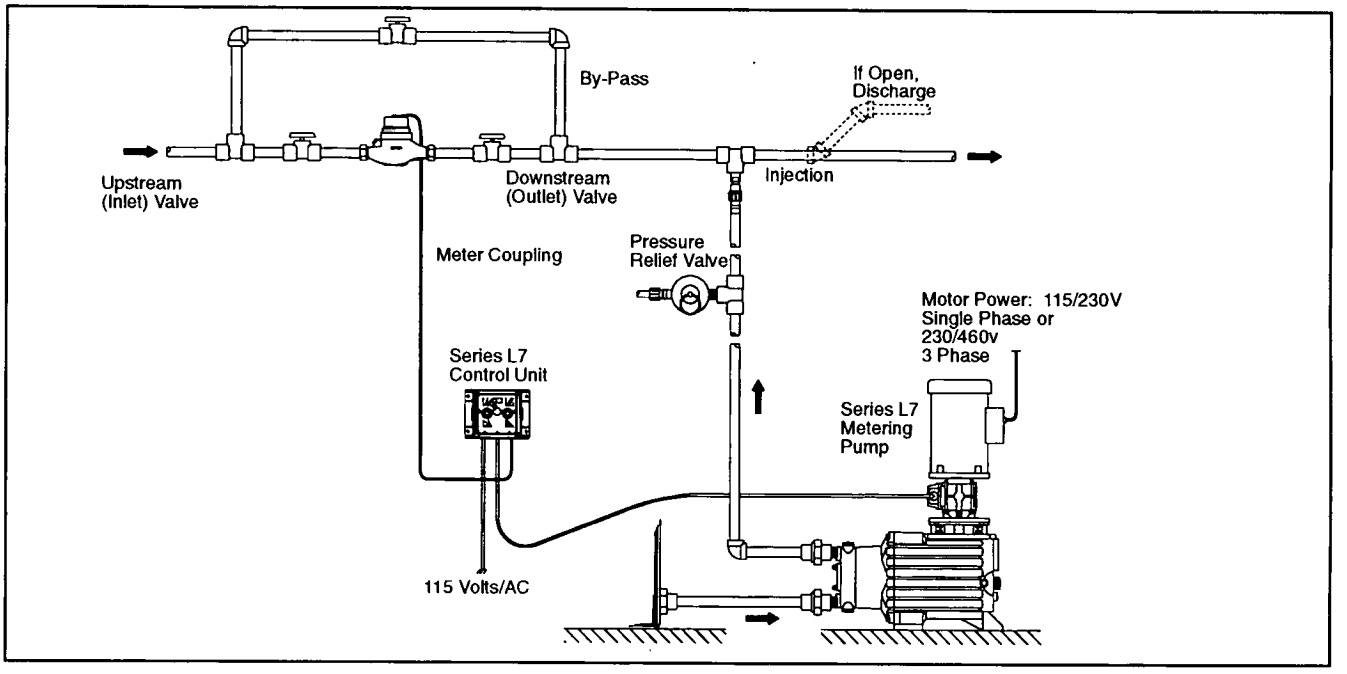

Figure 7

B. Operation in Internal Mod

The Internal control knob is graduated in percent of maximum pump speed, from 5% to 100%. setting this knob within this range allows the pump to operate independently of the flowmeter signal. Total pump output may be estimated by multiplying the speed setting (percent of maximum) by the stroke length setting (percent of maximum). Stroke length is controlled by a large knob at the rear of the pump itself, also graduated in percent of maximum. For example, if speed knob is set at 20% of maximum,and stroke length (at pump) is set at 60% of maximum, total pump output will be 12% of the pump's rated maximum. That is, 20% times 60% equals 12%. Series L7 equipped with 1/4 HP (1725 RPM) motors have a maximum speed of 72 strokes per minute. Those equipped with 1/2 HP (3450 RPM) motors have a maximum speed of 144 strokes per minute. Series L71 pumps exhibit 3.6 strokes per clutch actuation with a range of 3 to 30 cc's per stroke. Series L72 pumps exhibit 7.2 strokes per clutch actuation with a range of 3 to 30 cc's per stroke.

PRIME YOUR SERIES L7 PUMP WHILE IN THE INTERNAL MODE

C. Operation in External Mode

For operation in EXTERNAL mode, turn the speed knob on the Control Unit counterclockwise until it clicks into the 6 o'clock position. The pump will now respond directly and proportionally to the incoming flowmeter signal. Pump output adjustment can be made at the pump by using the stroke length knob at the rear of the pump. While the frequency with which the pump strokes is now determined by flow rate, output per stroke can be varied from 3 to 30 cc's per stroke using the control knob at the pump. For purposes of setting the divider number on the flowmeter, set the knob at the pump to 60%, since instructions in the following section are based on 60% stroke length for start up estimating.

VIII. MAINTENANCE

Should output be reduced or leaks develop, the valves, seal rings and seals may need to be replaced. Spare parts kits are available from your distributor. The following steps describe the proper procedures for depressurizing and disassembling for spare parts replacement.

INSTRUCTIONS FOR SPARE PARTS KITS SP-40/44/45

A. Depressurizing the Discharge Lin

CAUTION:
Before disassembling the pump, place a container below the suction line and pump head as a catch basin for the solution retained in the pump head.

1. With the pump running, turn the output (stroke) knob fully counterclockwise to zero, then turn off the pump.
2. If shut off valves have been installed on the pump suction and discharge line, they should be turned to the off position.
3. Carefully release pressure in the discharge line, noting that the pumping solution may be under pressure. Disconnect and drain the suction line into the catch basin.

NOTE:
Head will still retain some solution.

B. Liquifram® (Diaphragm) Replacement

1. Carefully remove the two valve cap nuts (1), washers (2) and the two retaining studs (3). Remove the valve caps (4) and (5) and drain remaining solution from the pump head.

2. Remove the eight cap nuts (6) and washers (7) and the pump head (8), along with the two clamp plates (9) and both the suction and discharge valves (10) and (11).

3. **IMPORTANT**: Remove the eight existing o-ring seals (not shown) located behind the pump head on each head stud and replace with the new o-ring seals included with the spare parts kit.

4. Disassemble head and clean all components, checking for residual build-up.

5. Turn pump on and adjust the output (stroke) knob to 85%, then turn pump off.

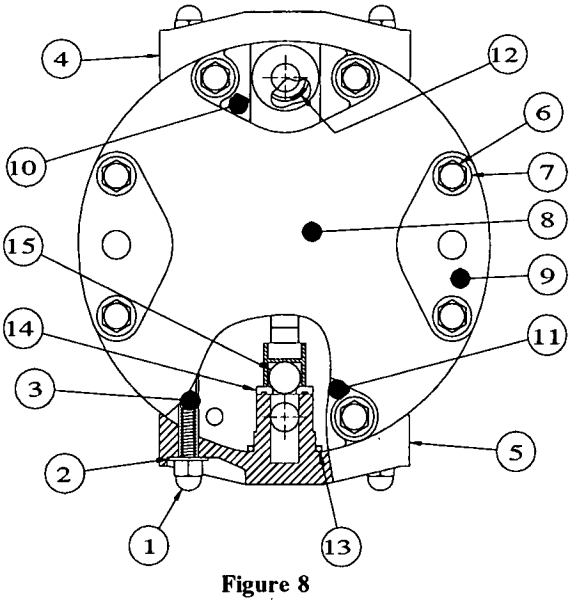

Figure 8

6. Screw on new Liquiframm® and adjust so that the Liquiframm® face is flush with the outside of the spacer (see Figure 10).

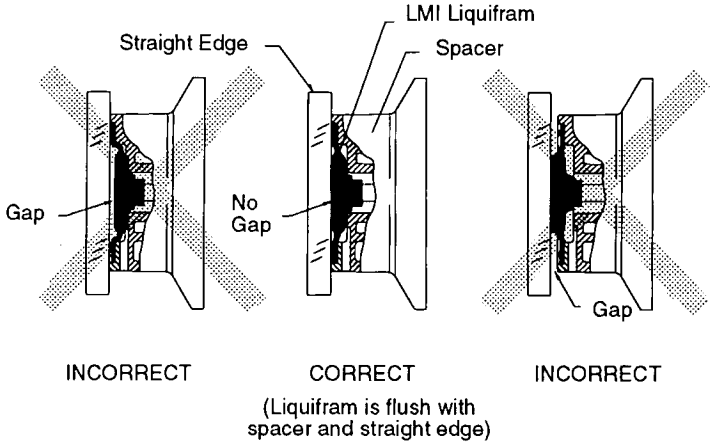

Figure 9

7. Replace seal rings, balls and o-rings at (12), (13), (14) and (15), located on both the suction and discharge side of the head.

WARNING:

Failure to install these o-ring seals could result in severe spraying of solution outside the pump head. Be sure all seals are in place before starting the pump.

8. Reassemble pump head components (1), (2), (3), (4) and (5), tightening the cap nuts evenly. Final torque should be 10 ft. lbs.

9. Reinstall pump head (8) along with other components (6), (7), (9), (10) and (11). Tighten head cap screws in a criss cross pattern. Final torque should be 10 ft. lbs.

C. Lubricant Change

For best results, lubricant should be changed once per year. With the pump stopped, the unit should be refilled to the top of the sight glass using 10W or 10W-40 motor oil. Filling to this level requires 1.5 quarts (1.4 liters) of oil.

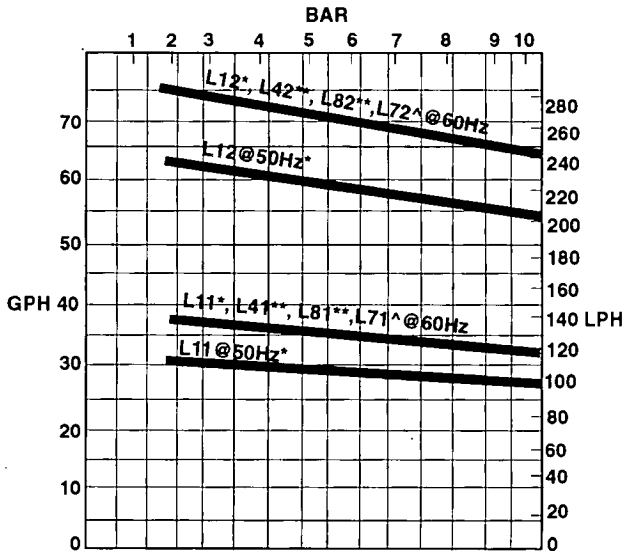

*** =100% SETTING (STROKE LENGTH)**
****=100% SPAN, 100% STROKE LENGTH**
^ =IN INTERNAL MODE

Figure 10

D. Reset Output Adjustment Knob

If the knob line doesn't line up with 100% on the dial **when turned counterclockwise** until it stops, the knob position on the shaft must be adjusted. Adjustment is achieved using the following procedure with the shaft set at the maximum counterclockwise position.

1. Pry off yellow knob cover.

2. Loosen knob retention nut while making certain knob-shaft assembly doesn't move.

3. Position the knob line in line with the 100% line on the label.

4. Tighten knob while holding knob steady.

5. Recheck setting and replace knob cover.

L SERIES DRIVE ASSEMBLY PARTS LIST

Ref No.	Part No.	Description	Quantity
1	27929	Camshaft Assembly	1
2	27938	Washer(Camshaft)	1
3	29133	Washer	1
4	26458-1	Key	1
5	25853	Gear	1
6	28914	Camshaft	1
7	25768	Ball Bearing	1
8	25781	Thin Cam Spacer	1
9	25767	Cam Bearing	1
10	25780	Wide Cam Spacer	1
11	25765	Ball Bearing	1
12	25787	Snap Ring	1
13	26128	Nut	4
14	27060	Gear Plate	1
15	26592	Alignment Pin	3
16	27244	Head Stud	8
17	26455	Setscrew	1
18	25996	Second Stroke Adjustment Shaft	1
19	27404	Pin	1
20	25764	Bushing	2
21	26703	Washer	2
22	25788	Screw	1
23	25852	Input Pinion	1
24	26168	Ball Bearing	1
25	26170	Snap Ring	1
26	25776	Ball Bearing	1
27	26130	Snap Ring	1
28	26097	Adjustment Shaft	1
29	10487	O-Ring	1
30	26105	Pin	1
31	25995	Adjustment Shaft End	1
32	25902	Nut	1
33	25796	Pin	1
35	26149	Washer	2
36	26208	Oil Splasher	1
37	26171	Screw	1
38	26229	Oil Fill Plug	1
39	27067-1	Housing	1
40	27183	Washer	1
41	27121	Screw	1
42	30848	Washer	1
43	26608	Knob Assembly	1
44	26607	Adjustment Stop Mechanism	1
45	26152	Sight Glass	1
46	24454	Pin	1
47	28310	Label	1
48	10842	O-Ring	1
49	26100	Lock Screw	1
50	26043	Lock Knob	1

Ref No.	Part No.	Description	Quantity
51	25755	Oil Seal	1
52	26140	O-Ring	8
53	26205	Oil Slinger	1
54	Cust. Supplied	Teflon Tape	A/R
55	26456	Oil Drain plug	1
56	27058-1	Spacer, 12.0SI	1
57	28154	O-Ring	1
58	26756	Small Return Spring	1
59	25782	Large Return Spring	1

			Qty. per Drive Ass'y	
Ref No.	**Part No.**	**Description**	**LXM**	**All Others**
67	26148	Washer	4	0
68	27372	Screw	4	0
69	26985	Motor Adapter	1	1
70	26107	Screw	0	4
71	26373	Motor Coupling Ass'y. (L1XM)	1	0
72	26371	Motor Coupling Ass'y	0	1
73	26180	Grommet	1	0
74	26181	Grommet	0	1
75	26108	Screw	8	8
76	26189	Gasket	1	1
77	26190	Gasket	1	1
78	26372	Motor Couplin Ass'y	0	0
79	26187	Gasket	0	0
80	26984	Motor Adapter(L11)	0	0
81	26188	Gasket	0	0
82	26150	Washer	8	12
83	26147	Nut	0	0
84	26106	Screw	0	0
85	27930	Input Pinion Ass'y	1	1
86	29141	Camshaft Asm. w/ Gear	1	1
87	29464	Screw	1	1

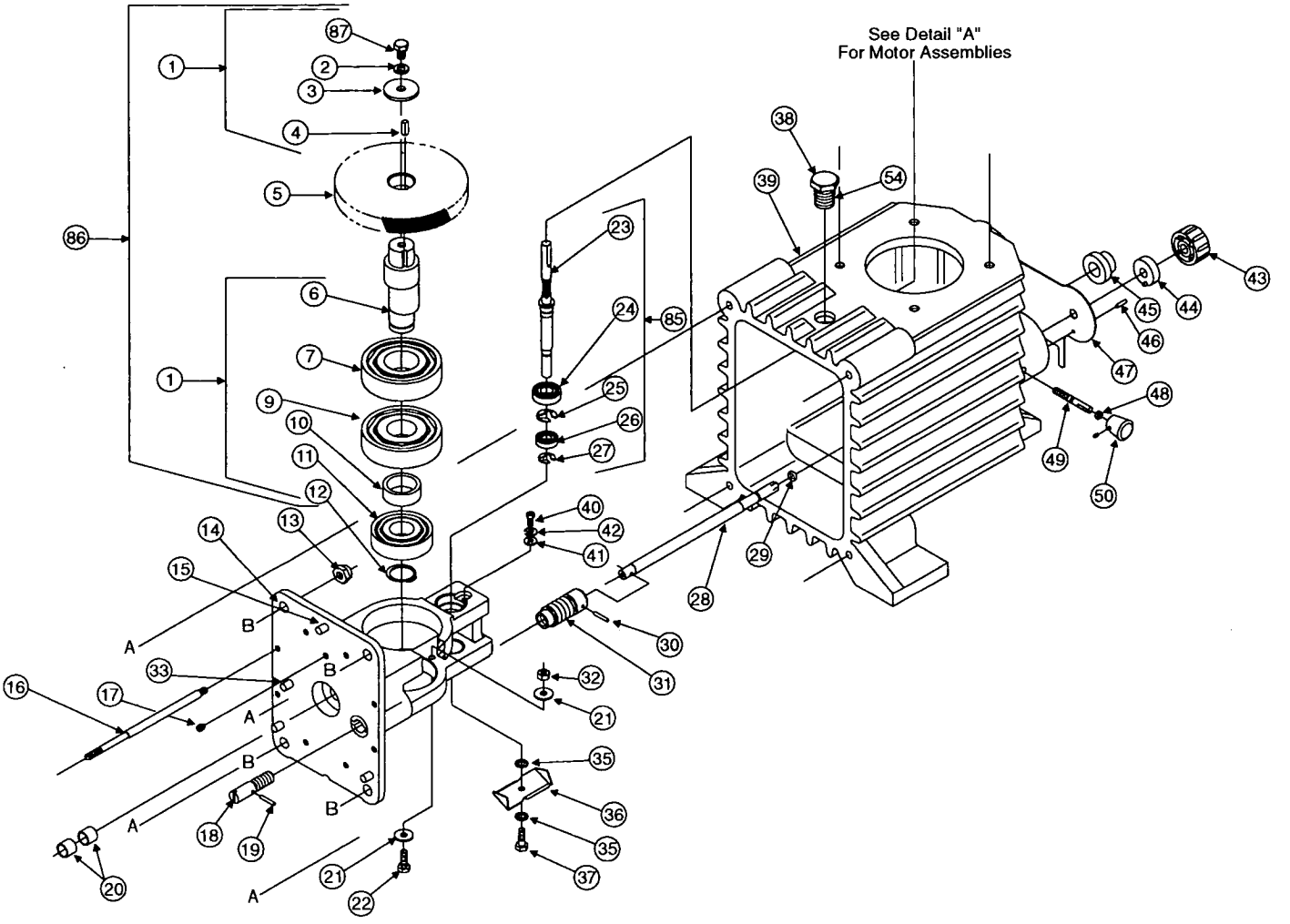
See Detail "A"
For Motor Assemblies
1
2
3
4
5
6
7
9
10
11
12
13
14
15
16
17
18
19
20
21
22
23
24
25
26
27
28
29
30
31
32
33
35
36
37
38
39
40
41
42
43
44
45
46
47
48
49
50
54
85
86
87
A
B

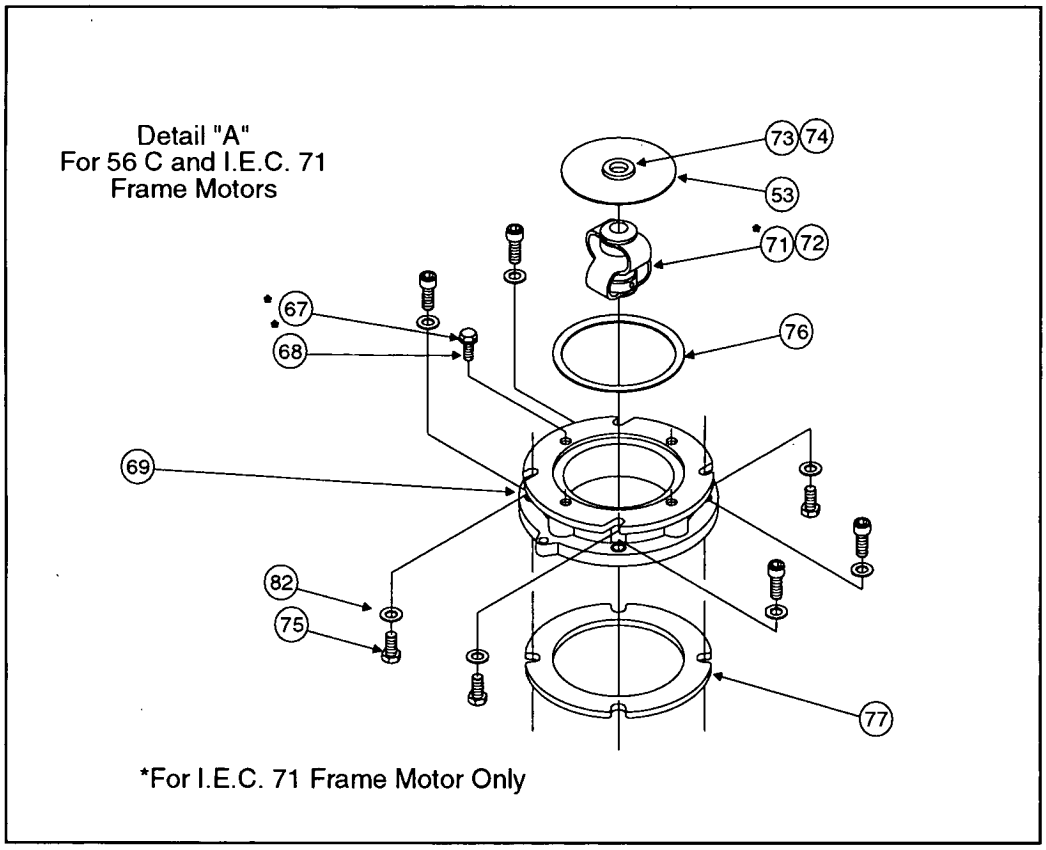
Detail "A"
For 56 C and I.E.C. 71
Frame Motors
73
74
53
71
72
67
68
76
69
82
75
77
*For I.E.C. 71 Frame Motor Only

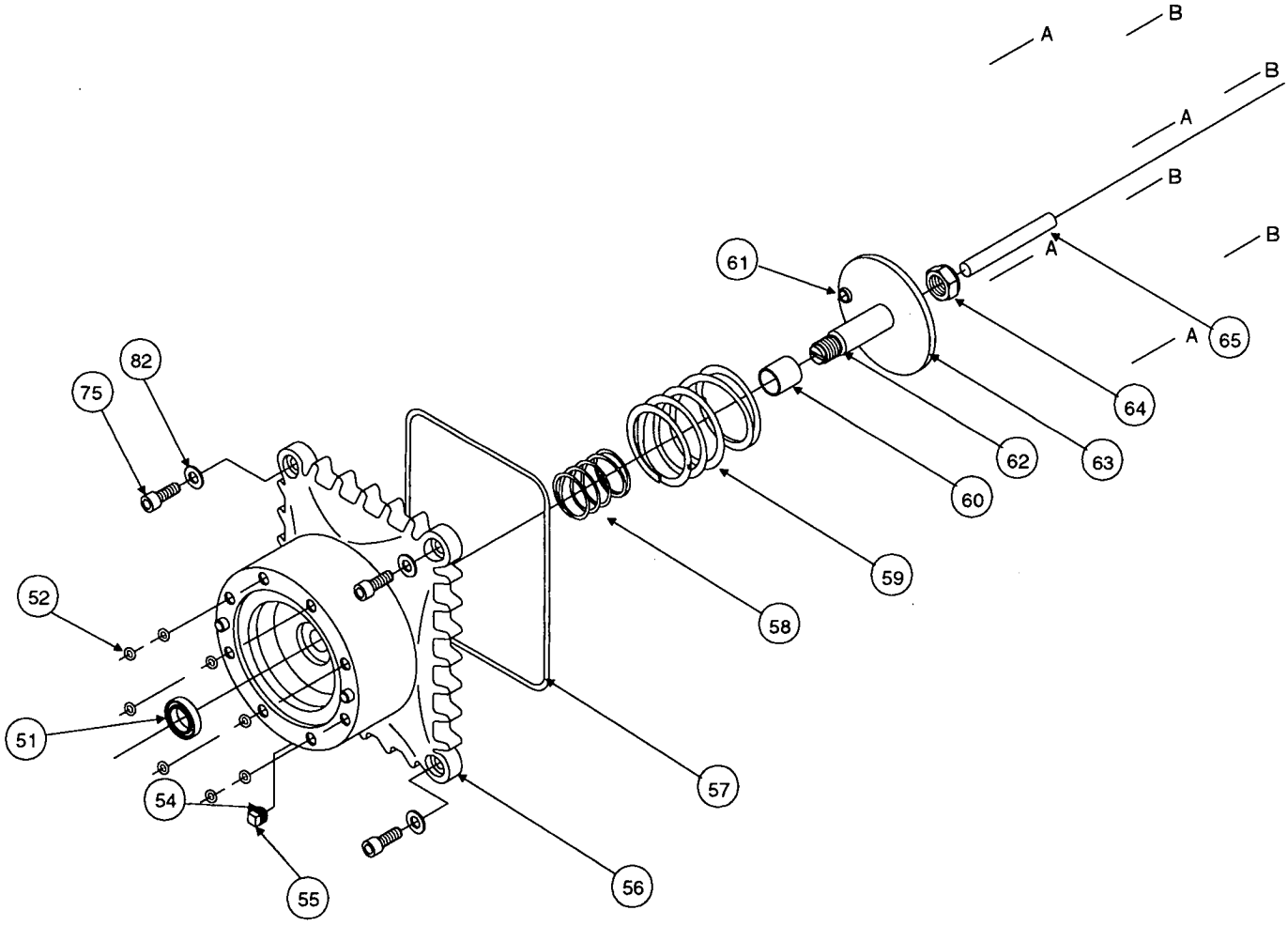
A
B
B
A
B
B
A
A
61
65
64
63
62
60
59
58
57
56
82
75
52
51
54
55

NOTES

Compressors, dryers and pumps
systems and service

Kentrol Inc
compressor and pump division
Post Office Box 219, Waterville, Maine 04903-0219
207 873-7741 FAX 207 873-2945

THE INSCO GROUP
Quality Starts Here

LMI
LIQUID METRONICS DIVISION
MILTON ROY

8 Post Office Square
Acton, MA 01720 U.S.A
TEL (508) 263-9800
FAX (508) 264-9172

Specifications subject to change without notice.
Printed in U.S.A.

LE-40 LE-44 LE-45
LIQUID HANDLING ASSEMBLY

CAUTION

When pumping solutions make certain that all tubing or pipe lines are securely attached to the fittings. It is recommended that tubing or pipe lines be shielded to prevent possible injury in case of rupture or accidental damage. Always wear protective clothing and face shield when working on or near your metering pump.

WARNING

A PRESSURE RELIEF VALVE WITH A RELIEF PRESSURE OF 150 PSI MAXIMUM AND A RELIEF FLOW (BLEED) RATE OF 4 GPM MINIMUM *MUST* BE INSTALLED IN THE DISCHARGE LINE OF THIS PUMP. Discharge piping should have a minimum burst pressure of 600 PSI. Failure to provide pressure relief may result in failure modes dangerous to the system , associated piping, the pump itself and operating personnel.

Note: See parts list for materials of construction

A. INSTALLING INJECTION CHECK VALVE (OPTIONAL)

1. The purpose of the injection check valve is to prevent backflow from the treated line.
2. A 3/4" NPT female fitting with sufficient depth will accept the injection check valve.
3. To insure correct seating of the ball inside the injection check valve, the injection check valve should be installed upwards (vertically) into bottom of the pipe.

B. CONNECTING DISCHARGE PIPE

NOTE:
Corrosion resistant 3/4" Schedule 80 should be used. DO NOT USE SMALLER PIPE SIZES.

1. Discharge valve has a 3/4" NPT male outlet. A short 3/4" NPT union should be connected to both discharge and suction valves so that the metering pump may be removed without disturbing piping.
2. It is recommended that Teflon tape be used on tapered pipe threads so that there is a leakproof seal without overtightening of fittings.

EXCESSIVE FORCE WILL CRACK OR DISTORT FITTINGS.
DO NOT OVERTIGHTEN.

C. CONNECTING SUCTION PIPE AND FOOTVALVE (OPTIONAL)

1. Using the same size and material pipe as used on the discharge line, cut the suction pipe to length so that the foot valve (optional) is positioned just above the bottom of the solution container. Maximum recommended vertical suction lift is 5 ft. (1.5m).
2. It is recommended that Teflon tape be used on tapered pipe threads so that there is a leakproof seal without overtightening of fittings. Suction side leaks are invisible, but if present will cause pump to suck in air during each pump stroke.

D. PRIMING

1. Temporarily disconnect the union at the end of the discharge pipe run.

NOTE:
Stroke cannot be adjusted until pump is operating electrically. Turn lower knob while unit is stroking.

2. Start pump. Set knob to 100% stroke.
3. As soon as solution begins to enter the discharge pipe, stop the pump.
4. The pump is now primed.
5. Reconnect union at the end of the discharge pipe.

NOTE:
(a) Pump is normally self-priming if suction lift is not more than 5 ft. (1.5m), valves in the pump are wet with water (pump is shipped from factory with water in pump head) and the above steps (D. Priming) are followed.
(b) If the pump does not self prime, remove discharge valve housing and ball and pour water or solution slowly into discharge port until head is filled. Follow step D. Priming thereafter.

LMI
LIQUID METRONICS DIVISION
MILTON ROY
ISO9001 Certified • a unit of Sundstrand Corporation

8 Post Office Square
Acton, MA 01720 U.S.A.
TEL (508) 263-9800
FAX (508) 264-9172

Catalog Sec 4.0 pg 2600
Replaces same of 8/94
1215. D 5/95

KEY NO.	PART NO.	DESCRIPTION	QUANTITY		
			LE-40	LE-44	LE-45
6	25895*+~	O-Ring, Viton	2	2	2
7	26045-1	Fitting, 3/4" NPT, Polypropylene			2
	31211	Fitting, 3/4" NPT, PVDF	2	2	
8	26169	Washer, SS	12	12	12
9	25754	Cap Nut, 1/4 - 20 SS	12	12	12
10	26562	Plate, PP	2	2	2
11	25893	Suction Valve Seat, Polypropylene			1
	31208	Suction Valve Seat, PVDF	1	1	
12	26185	Stud	2	2	2
18**	26698	Foot Valve Assembly**	1		
	26699	Fooy Valve Assembly**		1	
	26700	Foot Valve Assembly**			1
19	27024	Valve Housing, 3/4" NPT PVC**	1	1	
	27033	Valve Housing, 3/4" NPT Polypropylene			1
20	25600	Foot Valve Seat, Polypropylene	1	1	1
21	10123	Strainer, Polypropylene**	1	1	1
22	26598	Head Assembly , LE-40	1		
	26599	Head Assembly , LE-44		1	
	26600	Head Assembly , LE-45			1
23	26672	Fitting, 3/4" x 1/2" NPT PVC	1	1	
	29593	Fitting, 3/4" x 1/2" NPT PVDF			1
24	26323	Ball Guide, Polypropylene	2	2	2
25	25894	Plug, Polypropylene			1
	31209	Plug, PVDF	1	1	
28	26151*+~	O-Ring Viton	2	2	2
29	10138*+~	Ball Ceramic .500"	4	4	4
30	10128*	Seal Ring, Hypalon	4		
	10228+	Seal Ring Viton		4	
	25128~	Seal Ring Teflon			4
31	25186	Head, 12.0 SI, Acrylic	1		
	26525	Head, 12.0 SI PVC		1	
	26681	Head, 12.0 SI, Polypropylene			1
33	26119*	Liquifram, 12.0 SI, Hypalon	1		
	26319+~	Liquifram, 12.0 SI, Teflon Face		1	1
34**	26675	Injection Valve Assembly**	1		
	26674	Injection Valve Assembly**		1	
	26673	Injection Valve Assembly**			1
35	10339	Spring, PVDF**	1	1	1
36	27001	Valve Seat, 3/4" NPT PVC**	1	1	
	27032	Valve Seat, 3/4" NPT Polypropylene**			1
37	25108	Injector Fitting, Polypropylene**	1	1	1
	26140*+~	O-Ring (not shown)	8	8	8

* Parts included in Spare Parts Kit Sp-40

\+ Parts included in Spare Parts Kit Sp-44

~ Parts included in Spare Parts Kit Sp-45

** Optional parts not included in Liquid End

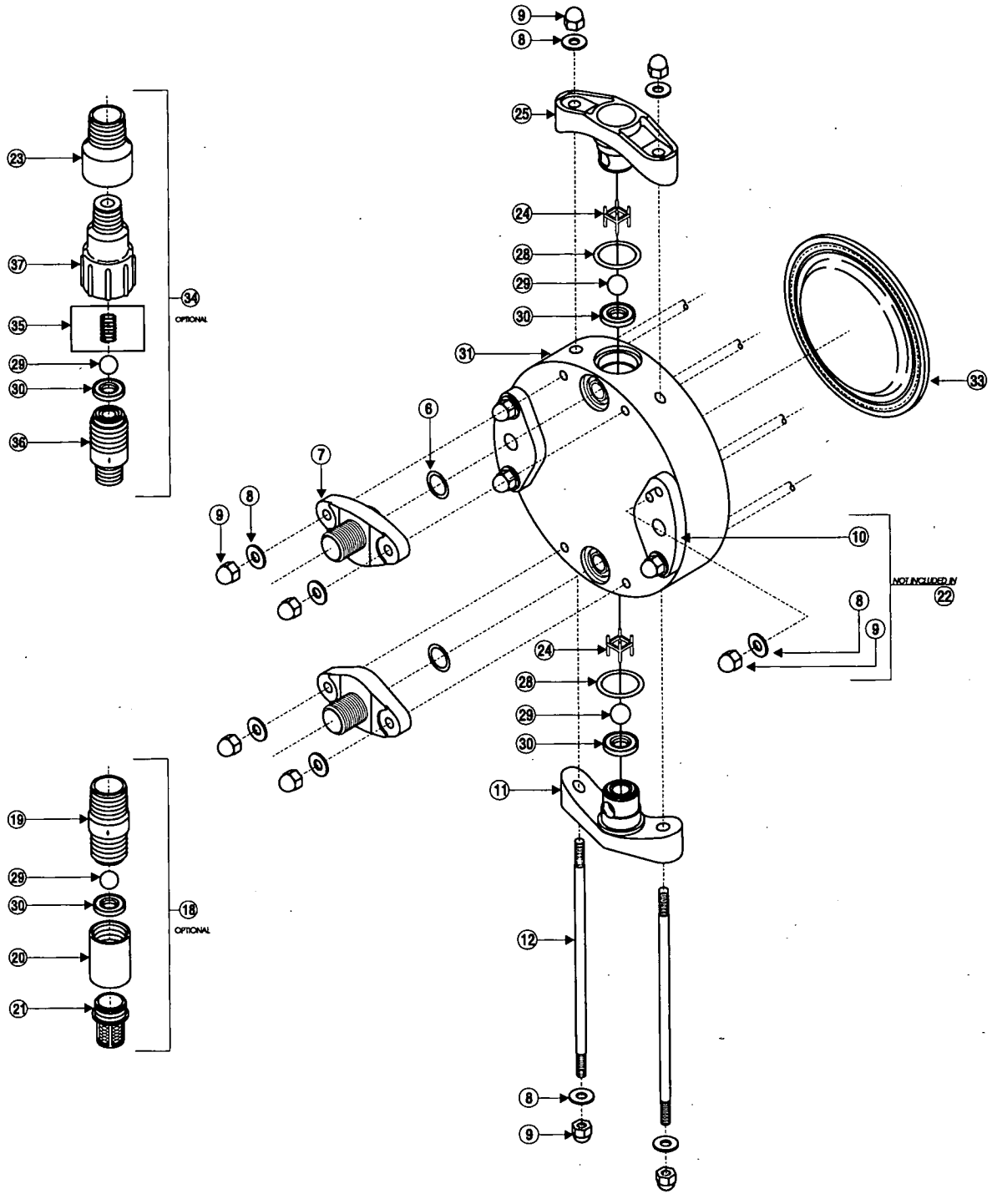

WARNING

A PRESSURE RELIEF VALVE WITH A RELIEF PRESSURE OF 150 PSI MAXIMUM AND A RELIEF FLOW (BLEED) RATE OF 4 GPM MINIMUM MUST BE INSTALLED IN THE DISCHARGE LINE OF THIS PUMP. Discharge piping should have a minimum burst pressure of 600 PSI. Failure to provide pressure relief may result in failure modes dangerous to the system, associated piping, the pump itself and operating personnel.

LMI
LIQUID METRONICS DIVISION
MILTON ROY

ISO9001 Certified • a unit of Sundstrand Corporation

8 Post Office Squar
Acton, MA 01720 U.S.A.
TEL (508) 263-9800
FAX (508) 264-9172

MONARCH WATER SYSTEMS, INC.

Since 1918

1230 Burnett Dr. Xenia, Ohio 45385-5687
513-372-7200 Fax 513-372-4622
1-800-55-33-MWS

SECTION 11340

GREENSAND FILTERS

OPERATION AND MAINTANCE MANUAL

For:

THE DEPARTMENT OF NAVY
Naval air Station
Brunswick, Maine

Installed by:

H.E. Sargent, Inc.
101 Bennoch Road
Stillwater, Maine 04489

Serial Number:

2-7168-95

MONARCH WATER SYSTEMS, INC.

1230 Burnett Dr. • Xenia, Ohio 45385-5687

Since 1918 513-372-7200 Fax 513-372-4622

1-800-55-33-MWS

TABLE OF CONTENTS

1. SHIPPING INFORMATION

2. EQUIPMENT

3. INSTALLATION

4. LOADING FILTER TANKS

5. LOADING MANGANESE GREENSAND

6. CONDITIONING MANGANESE GREENSAND

7. LOADING ANTHRACITE CAP

8. FLOW SCHEMATICS
   - Service
   - Tank #1 Backwash
   - Tank #2 Backwash
   - Tank #3 Backwash
   - Tank #4 Backwash

9. FILTER MEDIA

10. SOLENOID INSTALLATION

11. DIAPHRAGM VALVES
    - 425 Series
    - 427 Series

12. BURKERT SOLENOID

13. EAGLE TIMER HP-5 SERIES

14. MATERIAL SAFETY DATA SHEETS
    - Anthracite
    - Manganese Greensand
    - Silica Sand

15. DRAWINGS
    - C-7168-C1 - CONSTRUCTION
    - C-7168-E1 - ELECTRICAL

MONARCH WATER SYSTEMS, INC.

MODEL NUMBER MUN-H Series

SERIAL NUMBER 2-7168-95

This equipment, when shipped, included:

When this unit was shipped it contained the following:

2 Duplex filter tanks mounted on a common structural steel frame, complete with piping and automatic diaphragm valves.

4 skids Manganese Greensand Filter Media (126 - 1 cubic foot bags)

1 skid Anthracite Filter Media (26 - 1 cubic foot bags)

2 skids Silica Quartz Support Bed

X-Fine	1200 lbs
Fine	1200 lbs
Medium	1600 lbs
Coarse	1800 lbs

1 Interconnecting pipe for Backwash Supply Line (4" x 39-7/16")
(shipped on skid with manganese greensand)

1 Interconnecting pine for Backwash Drain Line (4" x38-3/4")
(shipped on skid with manganese greensand)

1 box containing:

2 Interconnecting Plate with bolts for skid

4 4" Groove Lok Couplings

continued

1 box containing:

1	Electric Control Panel
4	Solenoids (two duplex blocks) #312-C-5/64-F-BR-MAN-120/60-Z-H-000
100ft	1/4" Poly Tubing
14	1/4" Poly Tube Tees 70N-4
6	1/4" Poly Tube Straight Fittings 10N-4-4
8	Pressure Gauge and Sample Cocks Assemblies (0 - 100 psi)

MONARCH WATER SYSTEMS, INC.

SPECIFICATION

MODEL NUMBER	MUN-H Series
SERIAL NUMBER	2-7168-95
TYPE	Manganese Greensand Filters
CONTROL VALVES	Aqua Matic 427 - S 3" Diaphragm Valve N.O. Aqua Matic 427 - S 3" Diaphragm Valve N.C. Aqua Matic 425 - S 2" Diaphragm Valve N.O.
SOLENOIDS	Burkert #312-C-5/64-F-BR-MAN-120/60-Z-H-000
CONTROLLER	Eagle Timer HP55A6

MEDIA

Description (per tank)	Size	Quantity
Coarse Silica Quartz 450 lbs	3/4" to 1/2"	1800 lbs
Medium Silica Quartz 400 lbs	1/2" to 1/4"	1600 lbs
Fine Silica Quartz 300 lbs	1/4" to 1/8"	1200 lbs
X-Fine Silica Quartz 300 lbs	1/8" to 1/16"	1200 lbs
Manganese Greensand Eastern Plume	0.30 mm to 0.35 mm 38 cu.ft./tank	126 cu.ft.
Site 1 & 3	25 cu.ft./tank	
Anthracite Site 1 & 3	0.8 mm to 1.2 mm 13 cu.ft./tank	26 cu.ft.

SERVICE FLOW RATE Eastern Plume	110 gpm
Site 1 & 3	30 gpm
BACKWASH FLOW RATE -	138 at 50°F

MONARCH WATER SYSTEMS, INC.

MODEL NUMBER MUN-H Series

SERIAL NUMBER 2-7168-95

INSTALLATION

Note: Filter tanks should be located on a flat, level, concrete surface, designed to support the weight of the tank, piping, filter media, and water. Surface should be designed so that the condensation drains away from the tank legs.

1. Move filter tanks into installation location, setting on a flat surface. Connect the two (2) skids together using the interconnecting plates and bolts provided. Level tank using steel shims if necessary. Grout under and around leg supports and frame.

2. Install the BACKWASH SUPPLY line (lower) between tanks #2 and #3 as shown on drawings, using two (2) 4" groove lok couplings. Install the BACKWASH DRAIN line (upper) between tanks #2 and #3 as shown on drawings, using two (2) 4" groove lok couplings.

See Drawing No. MWS 7168 C2

3. Connect inlet piping to openings shown on drawing.

4. Connect outlet piping to openings shown on drawing.

5. Connect the backwash supply to a clear source of filter water having a minimum flow of 135 gpm (see Backwash Flow Rate)

6. Connect the drain(s) to a suitable opening, in most cases this would be a sanitary sewer, or a red water filter basin. An air gap must be provided when connected to the sanitary sewer. Drain line should be as short as possible, with a minimum elevation above the connection.

   DO NOT REDUCE THE DRAIN LINE PIPE SIZE SMALLER THAN THE DRAIN CONNECTION.

   BACKWASH LINE IS UNDER PRESSURE AND MAY CAUSE PIPING TO MOVE IF NOT SECURELY SUPPORTED.

7. Install manual air vent if required.

8. After the main piping is completed, install instrumentation as provided.

   Example: Pressure Gauges, sample cocks, automatic air vents, etc.

9. Install 1/4" poly tubing from diaphragm valves to solenoid

valves as shown on drawing.

See Drawing No. MWS 7168 C2

10. Pressure test all piping, valves and tank(s) before loading filter media. Special attention should be taken to hand-holes and manholes on the lower portion of the tank (below the filter media level).

MONARCH WATER SYSTEMS, INC.

MODEL NUMBER MUN-H Series

SERIAL NUMBER 2-7168-95

LOADING FILTER TANKS

CAUTION

Silica quartz and filter sand may contain free silica dust. Avoid prolonged breathing of the dust, which may cause delayed lung injury.

Use OSHA approved respirator when working with silica.

See Material Safety Data Sheets

1. Open manhole cover. It is recommended that a rope or cable be attached to the manhole cover to prevent the lid from accidentally falling inside of the tank and damaging the distributor systems.

2. Inspect distributor systems for damage or loose fittings

3. Separate the grades of gravel and check quantities against the packing list and drawings.

MEDIA IN REVERSE ORDER
(bottom to top)
Silica Quartz is packaged in 100 lb bags

300 lbs	Coarse	3/4" x 1/2"
300 lbs	Medium	1/2" x 1/4"
300 lbs	Fine	1/4" x 1/8"
300 lbs	X-Fine	1/8" x 1/16"

SEE MEDIA DETAIL DRAWINGS

4. Pour in bottom layer of support bed. Care should be taken not to break the bottom strainers. Level after each grade. By covering the bottom distributor with water, it will protect the distributor, helps distribute the silica quartz and reduces the dust.

   Level each layer of the support media before proceeding to the next layer.

MONARCH WATER SYSTEMS, INC.

MODEL NUMBER MUN-H Series

SERIAL NUMBER 2-7168-95

LOADING MANGANESE GREENSAND

1. Once the support bed is installed and leveled, the manganese greensand can be installed. The manganese greensand should be installed and packed under water. Fill the filter tank with clean water, 14" to 18" above the support bed.

2. Pour the manganese greensand into the filter tank, until the correct volume has been added. *See specification sheet for the number of bags or cubic feet of manganese greensand.*

CAUTION: The manganese greensand must be backwashed and the fines removed from the filter surface before the filter is placed in service or any other filter media is added to the top of the filter bed.

3. Backwash the filter at the required backwash flow rate. See specification sheet for proper flow rate.

4. Following backwash, drain filter tank. An inspection will show a layer of fine material on the bed surface from 1/2' to 1" thick, depending on the volume of manganese greensand. This material must be removed and discarded.

   To remove, use a flat trowel or shovel and then discard. The fines can be also removed by carefully shimming, siphoning, or vacuuming the fines from the top of the surface.

   Do not rake or scrape the fines across the filter bed, this will only push the fines down into the bed.

5 Once the fines have been removed the manganese greensand is ready for the addition of the anthracite cap or conditioning.

MONARCH WATER SYSTEMS, INC.

MODEL NUMBER MUN-H Series

SERIAL NUMBER 2-7168-95

CONDITIONING MANGANESE GREENSAND

Before the manganese greensand is placed in SERVICE, it must be conditioned with potassium permanganate ($KMNO_4$).

However before conditioning the manganese greensand the fines must be removed.

The following is the correct procedure to properly condition the manganese greensand before placing the unit into service.

1. Add water to the tank until it covers the manganese greensand bed by 2" to 4".

2. Dissolve 2 ounces of potassium permanganate per cubic feet of manganese greensand in water. Approximately 4 ounces of potassium permanganate will dissolve in one gallon of water.

   Potassium permanganate is slow dissolving, so constant stirring may be required.

3. Add solution to each filter tank, through top opening or manhole. If, any undissolved potassium permanganate remains add additional water to dissolve.

4. Open the lower drain or test cock an drain water from the filter tank until the water has a pink color or tint. Add more water to the top of the filter tank to keep the water level 4" to 6" above the top of the filter bed.

5. Allow the filter to stand 4 hours, or if practical, overnight. Drain tank, if the pink color disappears in the waste water after the permanganate solution has been drained through the filter bed, repeat steps 2 through 4 again using 1 ounce per cubic foot of filter media.

6. Refill tank with clean water, replace manhole cover, and pressurize system. Backwash filter tank until water runs clear.

7. The filter is ready for service or the addition of an anthracite cap.

NOTE: The manganese greensand filter must be rinsed with clear filtered water or service water that has been treated with potassium permanganate. Adjust chemical feeder to achieve a **"pink tint"** to the inlet water to the iron filters.

MONARCH WATER SYSTEMS, INC.

MODEL NUMBER MUN-H Series

SERIAL NUMBER 2-7168-95

LOADING ANTHRACITE CAP

Before loading the anthracite cap, the manganese greensand should have been conditioned and the fines removed.

1. Drain water level in filter tank to 12" below the manhole opening.

2. Add the anthracite filter media to the tank. *See specification sheet for the number of bags or cubic feet of anthracite.*

3. Replace manhole cover and pressurize tank. Filter is ready for operation.

SERVICE

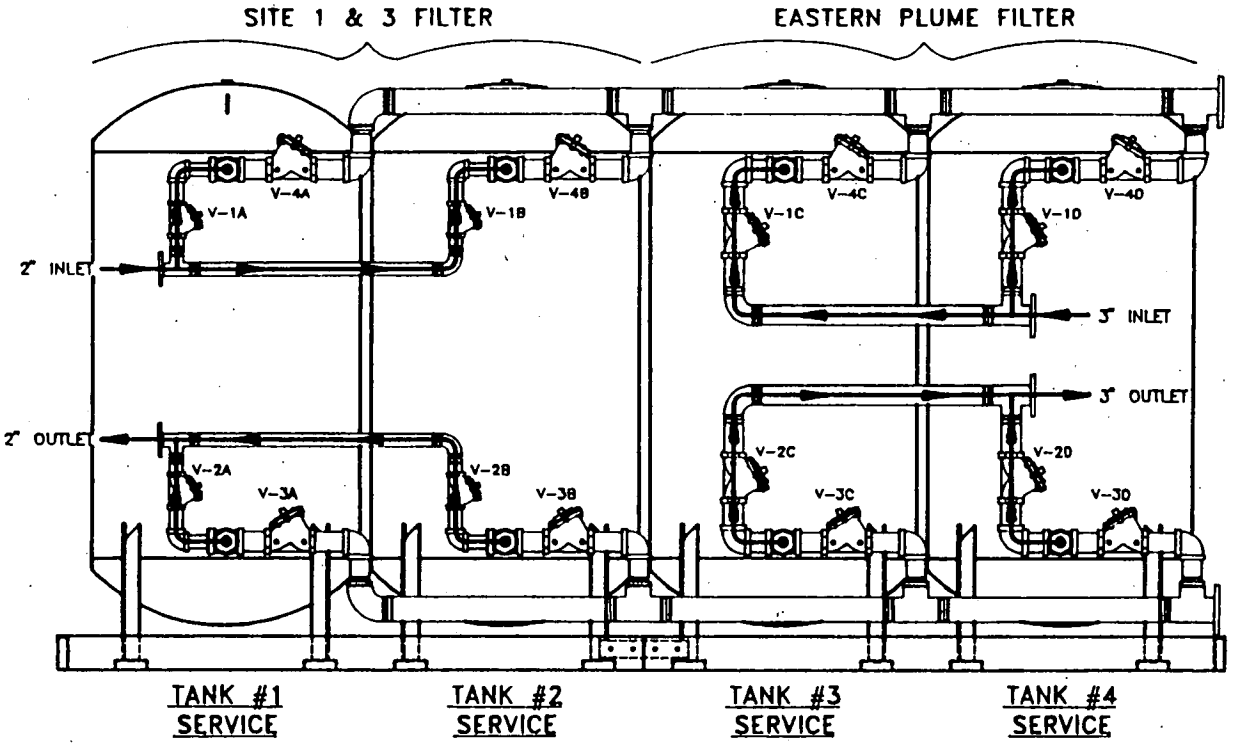

VALVES OPEN	VALVES CLOSED	SOLENOIDS ENERGIZED
V-1A	V-3A	
V-2A	V-4A	
V-1B	V-3B	
V-2B	V-4B	
V-1C	V-3C	
V-2C	V-4C	
V-1D	V-3D	
V-2D	V-4D	

TANK #1 BACKWASH

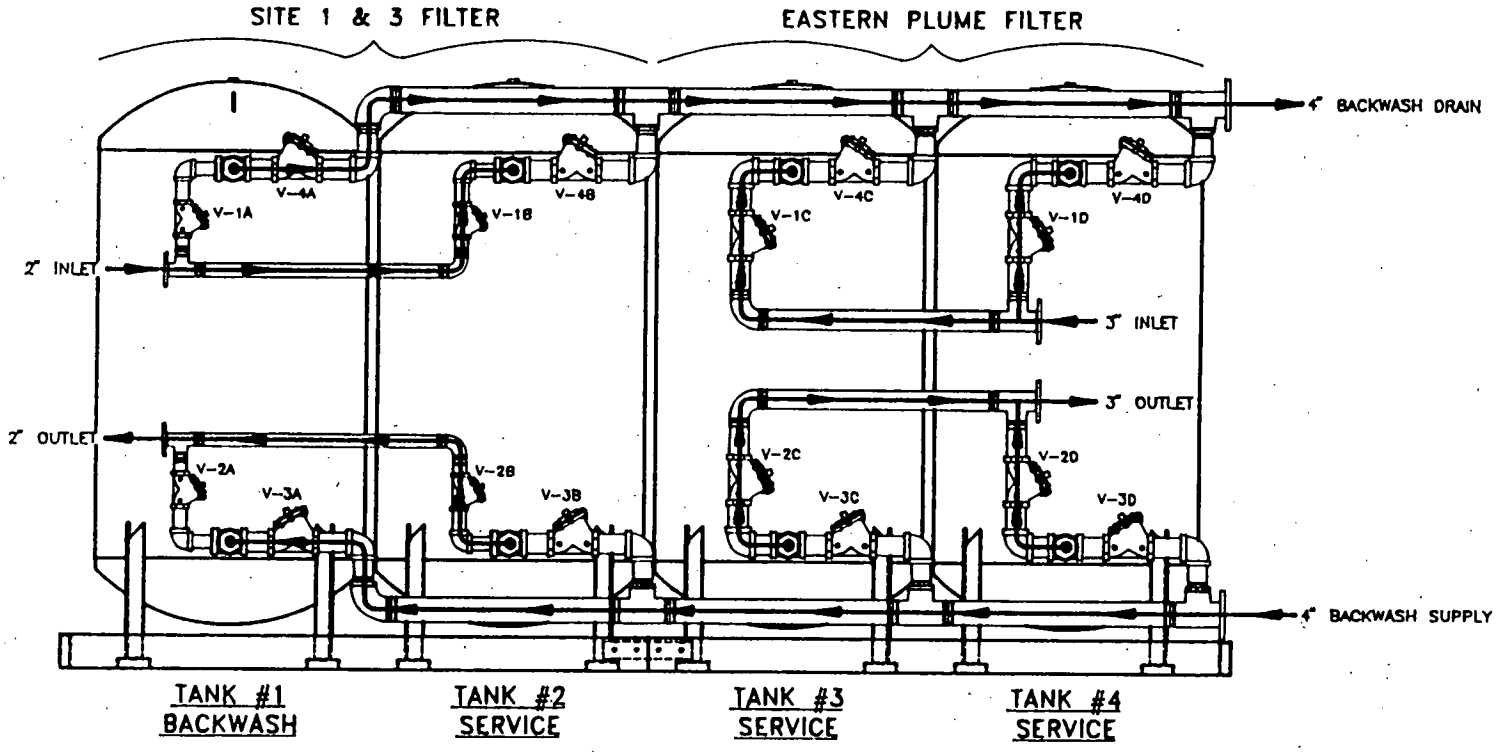

VALVES OPEN	VALVES CLOSED	SOLENOIDS ENERGIZED
V-3A	V-1A	SV-1
V-4A	V-2A	
V-1B	V-3B	
V-2B	V-4B	
V-1C	V-3C	
V-2C	V-4C	
V-1D	V-3D	
V-2D	V-4D	

TANK #2 BACKWASH

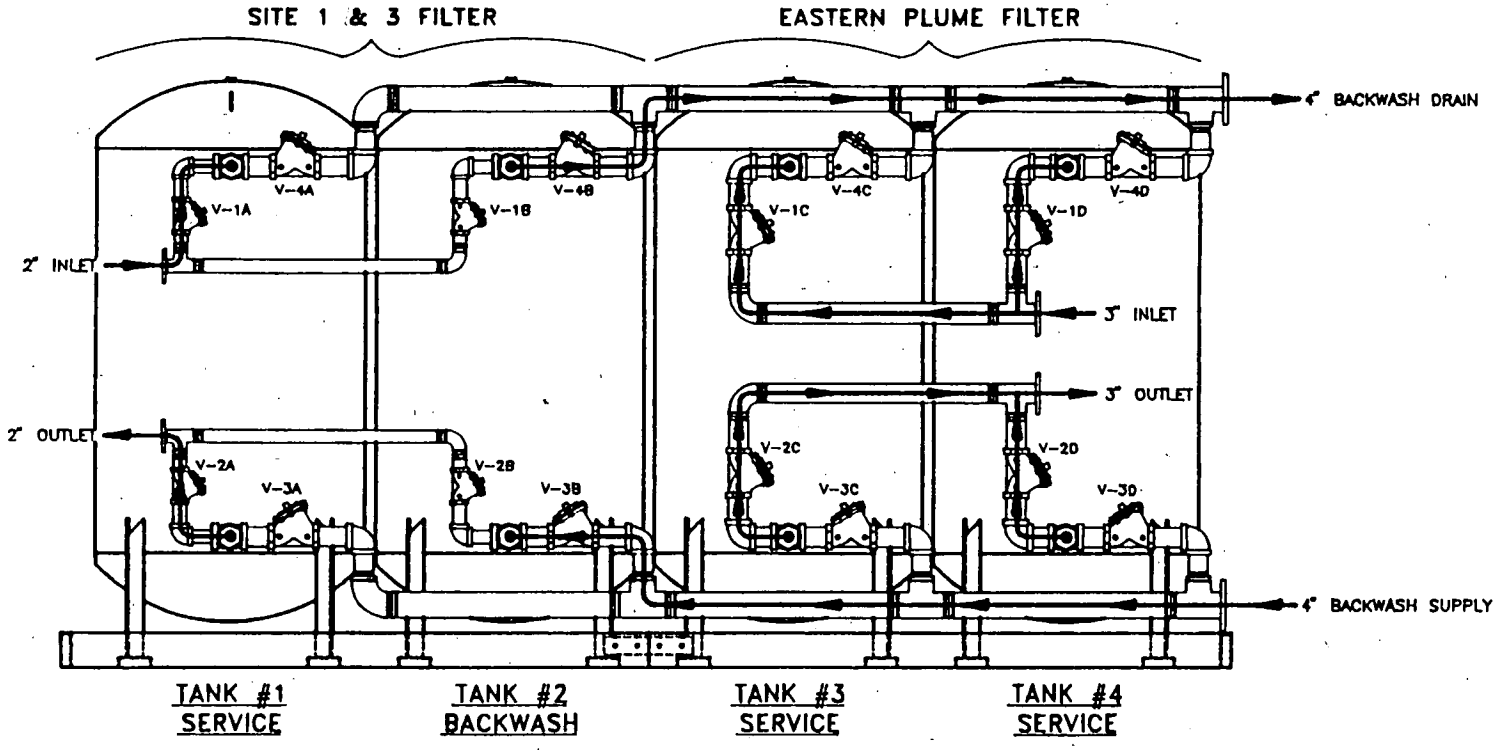

VALVES OPEN	VALVES CLOSED	SOLENOIDS ENERGIZED
V-1A	V-3A	
V-2A	V-4A	
V-3B	V-1B	SV-2
V-4B	V-2B	
V-1C	V-3C	
V-2C	V-4C	
V-1D	V-3D	
V-2D	V-4D	

TANK #3 BACKWASH

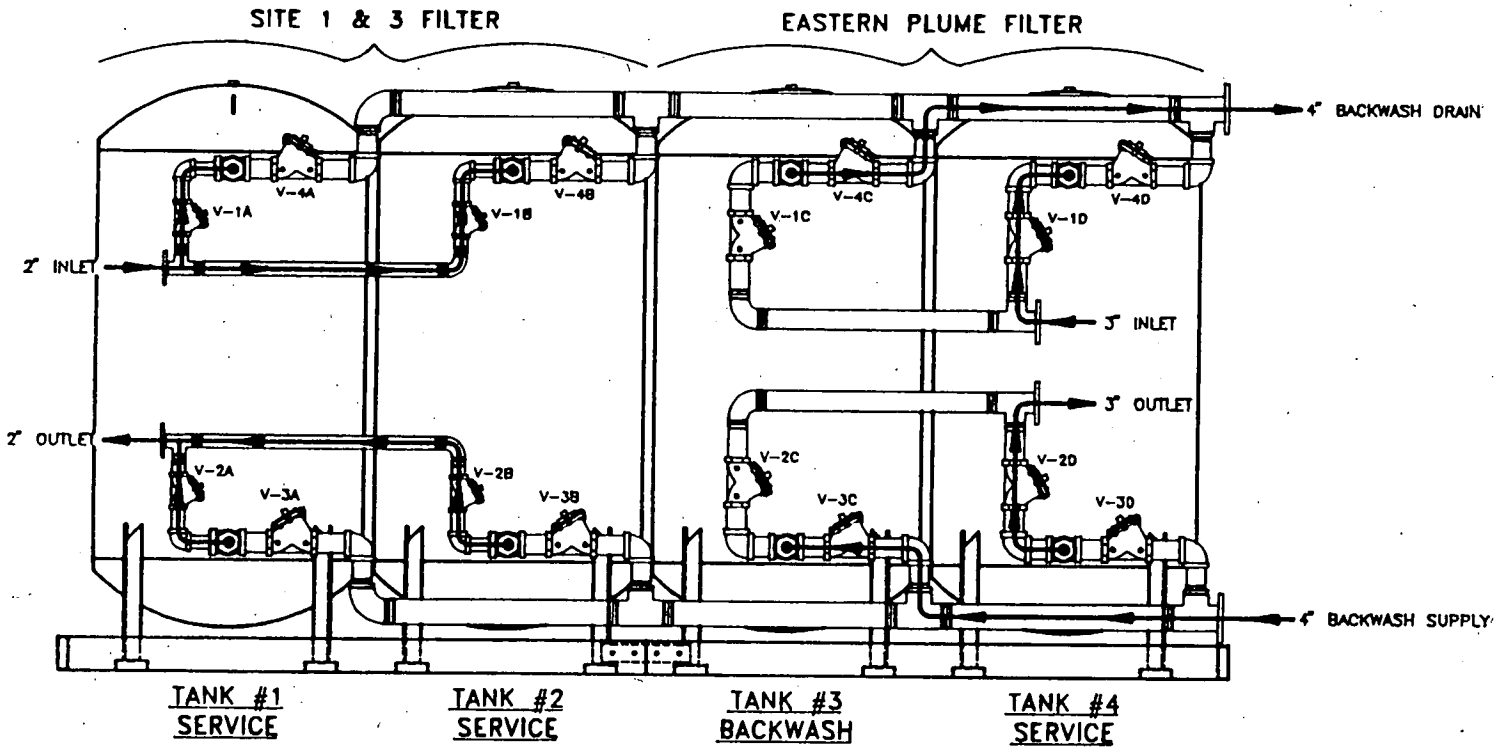

VALVES OPEN	VALVES CLOSED	SOLENOIDS ENERGIZED
V-1A	V-3A	
V-2A	V-4A	
V-1B	V-3B	
V-2B	V-4B	
V-3C	V-1C	SV-3
V-4C	V-2C	
V-1D	V-3D	
V-2D	V-4D	

TANK #4 BACKWASH

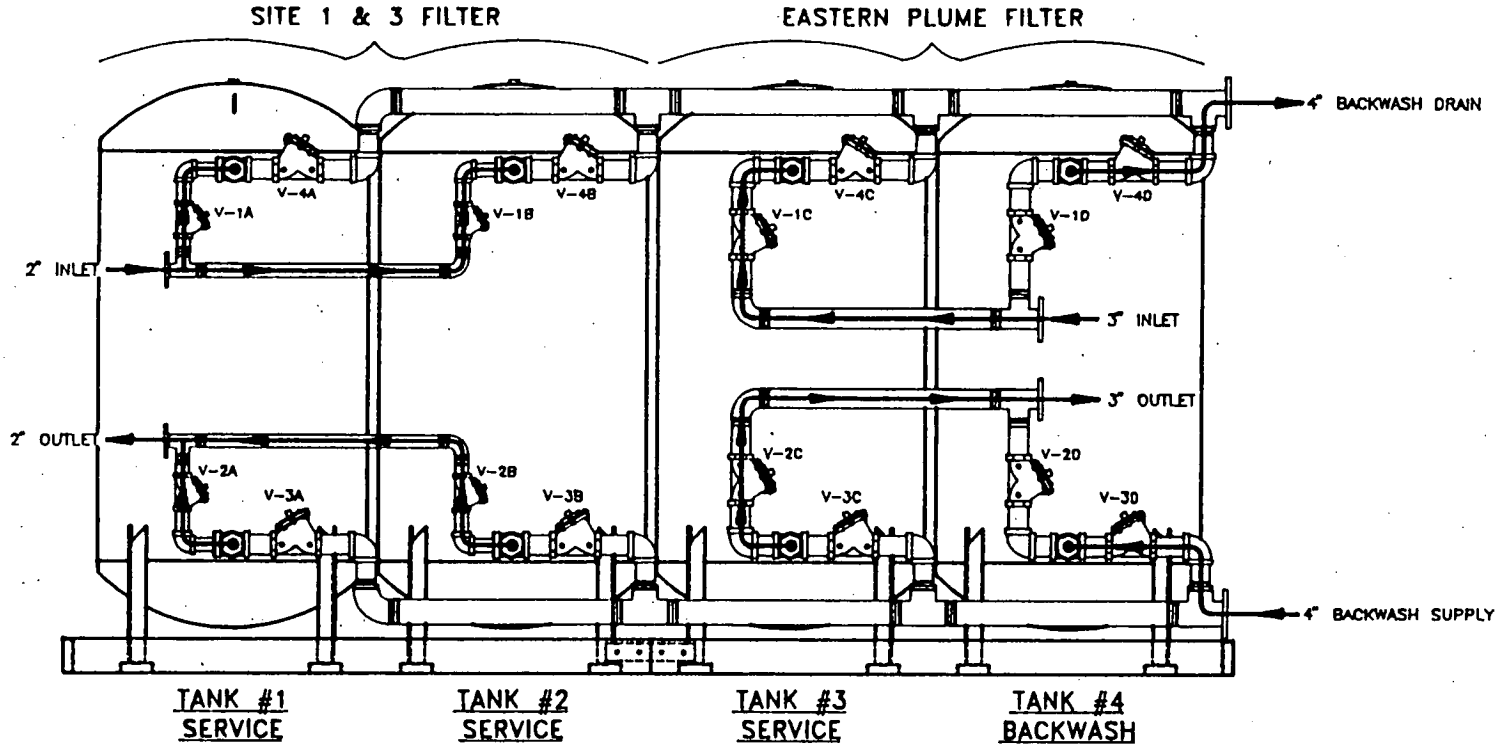

VALVES OPEN	VALVES CLOSED	SOLENOIDS ENERGIZED
V-1A	V-3A	
V-2A	V-4A	
V-1B	V-3B	
V-2B	V-4B	
V-1C	V-3C	
V-2C	V-4C	
V-3D	V-1D	SV-4
V-4D	V-2D	

SOLENOID INSTALLATION

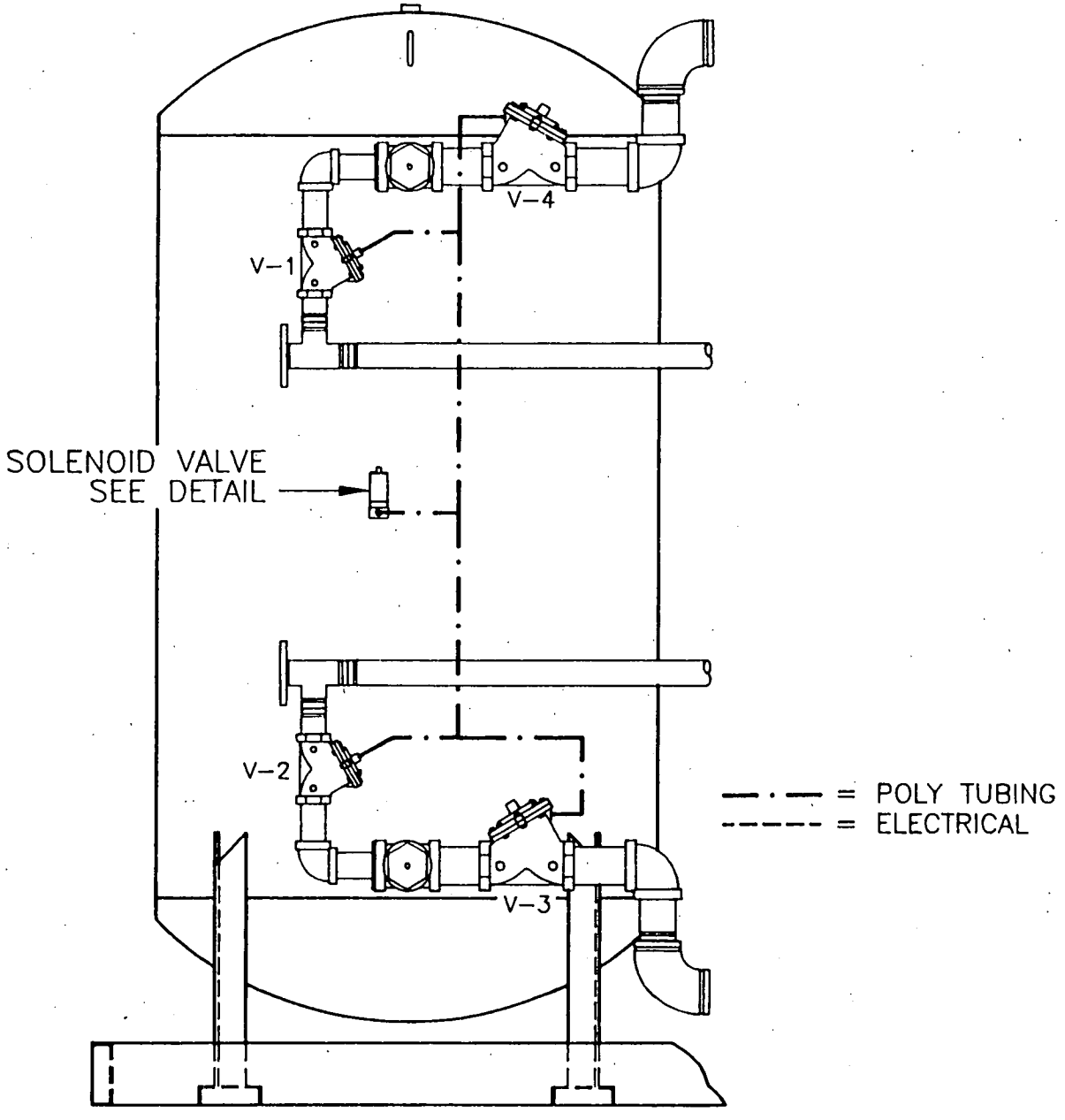

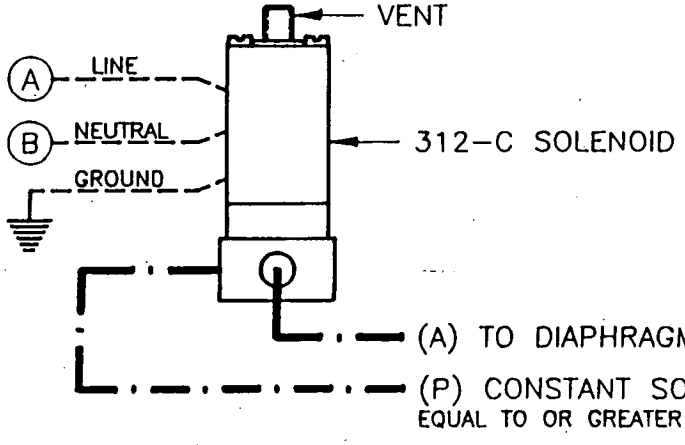

TANK #	A TO TERMINAL #	B TO TERMINAL #
1	6	2
2	7	3
3	8	4
4	9	5

SOLENOID DETAIL

MEDIA DETAIL

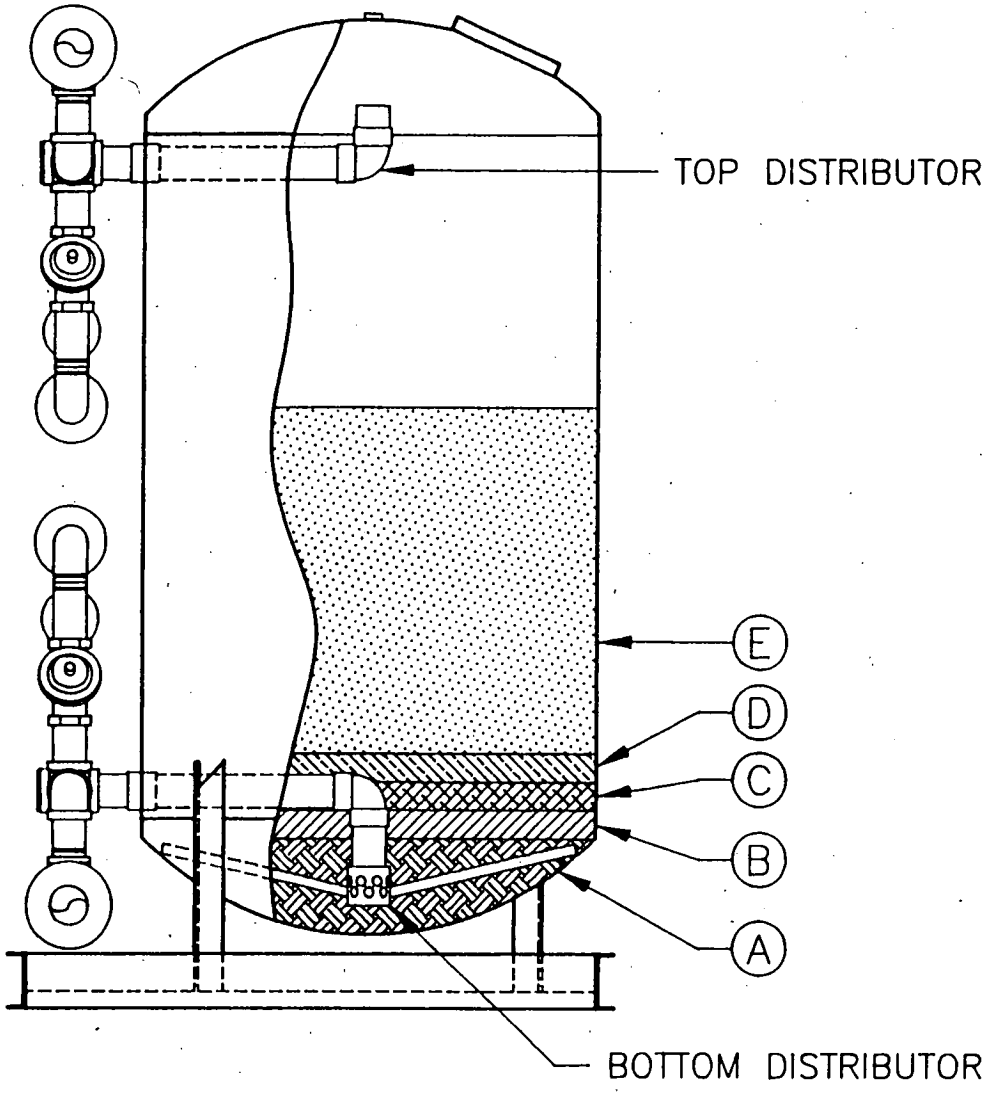

EASTERN PLUME FILTERS

◯	MEDIA DESCRIPTION	QTY. PER TANK
A	COARSE SILICA QUARTZ – 3/4" X 1/2"	450 LBS
B	3" – MEDIUM SILICA QUARTZ – 1/2" X 1/4"	400 LBS
C	3" – FINE SILICA QUARTZ – 1/4" X 1/8"	300 LBS
D	3" – EXTRA FINE SILICA QUARTZ – 1/8" X 1/16"	300 LBS
E	36" – MANGANESE GREENSAND EFFECTIVE SIZE 0.30mm TO 0.35mm UNIFORMITY COEFFICIENT LESS THAN 1.6	38 CU.FT.

MEDIA DETAIL

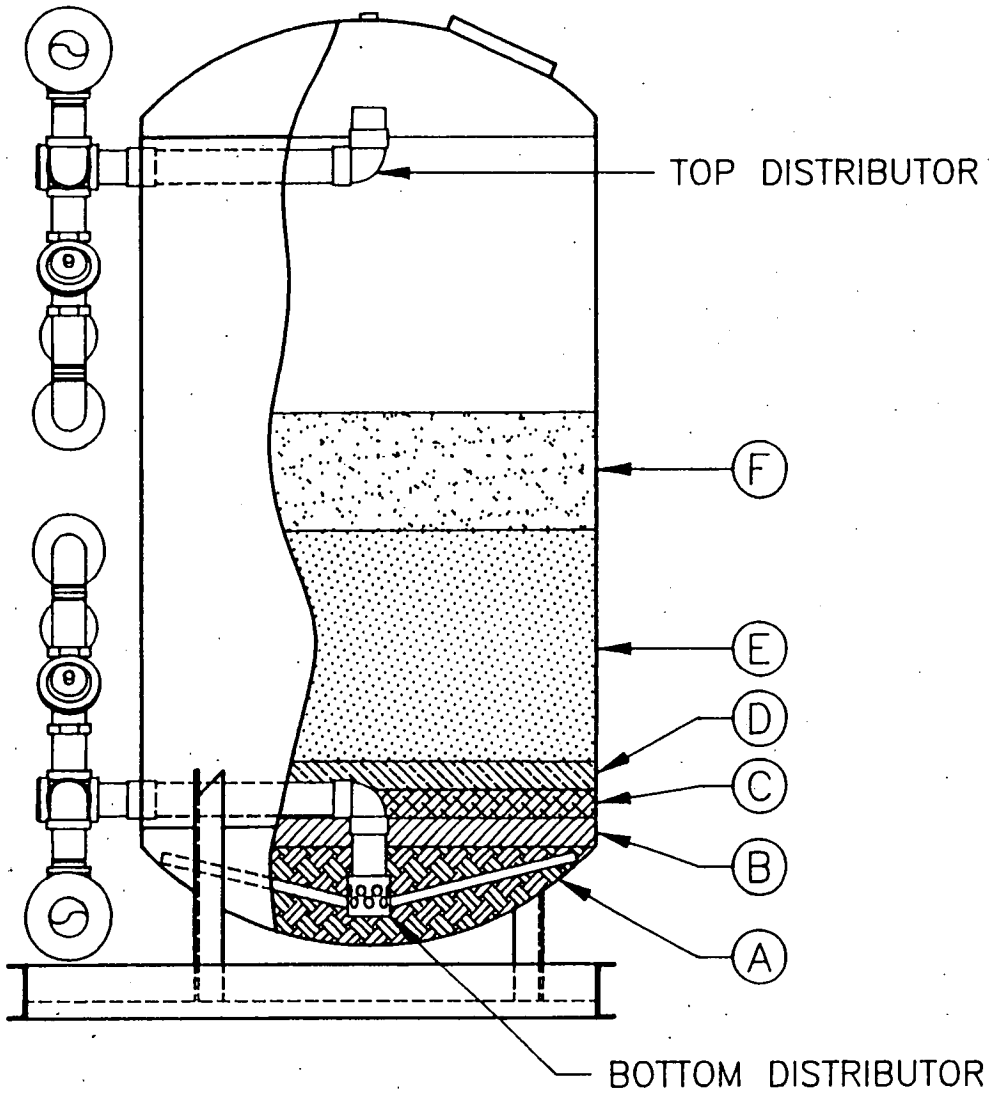

SITE 1 & 3 FILTERS

	MEDIA DESCRIPTION	QTY. PER TANK
A	COARSE SILICA QUARTZ – 3/4" X 1/2"	450 LBS
B	3" – MEDIUM SILICA QUARTZ – 1/2" X 1/4"	400 LBS
C	3" – FINE SILICA QUARTZ – 1/4" X 1/8"	300 LBS
D	3" – EXTRA FINE SILICA QUARTZ – 1/8" X 1/16"	300 LBS
E	24" – MANGANESE GREENSAND (SAME AS BELOW)	25 CU.FT.
F	12" – ANTHRACITE – 0.8mm TO 1.2mm	13 CU.FT.

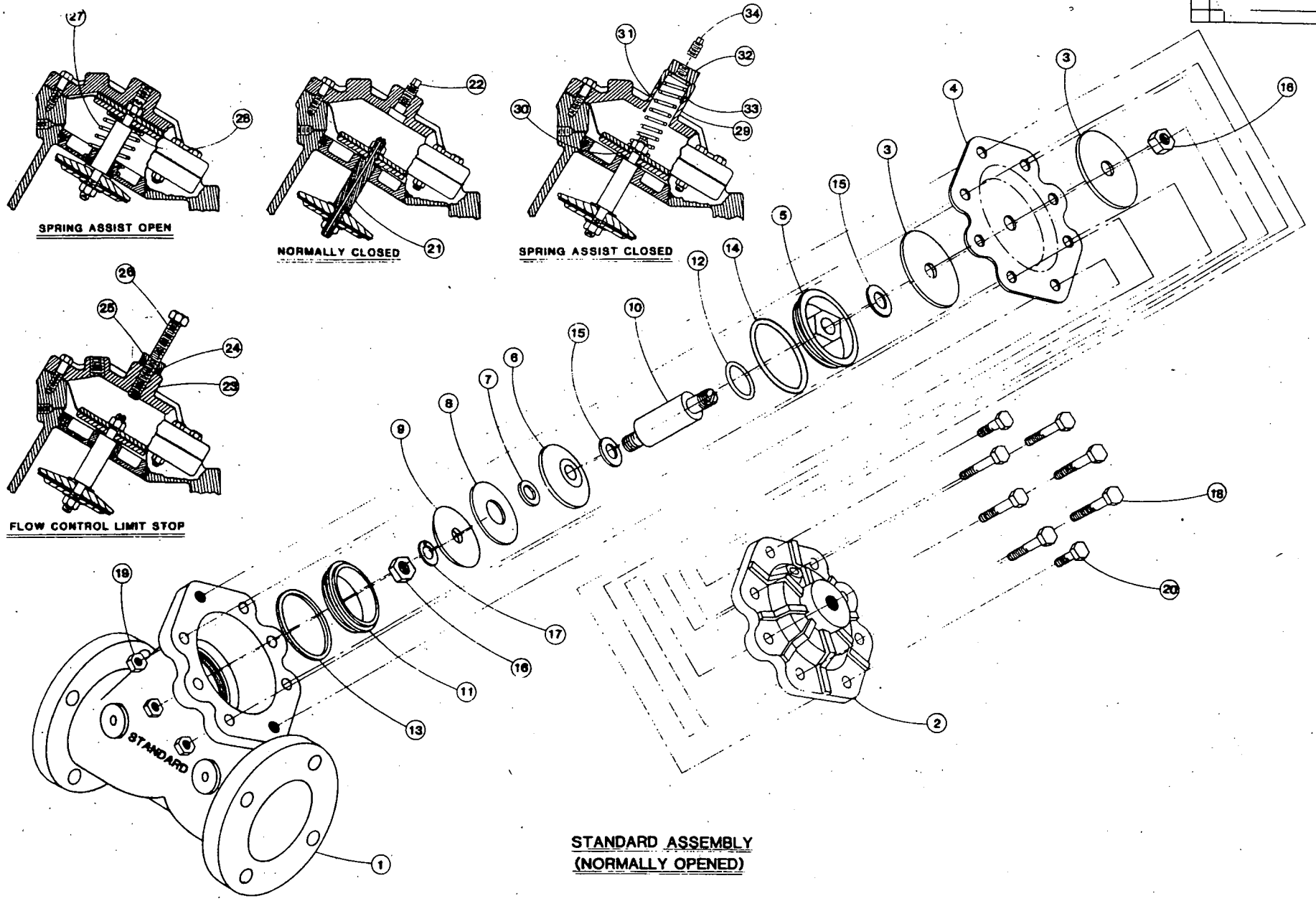

STANDARD ASSEMBLY
(NORMALLY OPENED)

REVISION RECORD		
DATE		DR. CK.

TOLERANCES (EXCEPT AS NOTED)	Monarch Water Systems		
DECIMAL		SCALE NONE	DRAWN BY ERNEST
FRACTIONAL	TITLE SERIES 427 DIAPHRAGM VALVE W/ 3"FLANGED CONNECTIONS		
ANGULAR	DATE 01-20-84	DRAWING NUMBER CX - 5028	

Series 427 Diaphragm Valve
Parts List

Item No.	Description	No. Re'qd.	Part No.
1	Body (see note)	1	427-A
2	Cap	1	427-C
3	Diaphragm Plates	2	427-D
4	Formed Diaphargm	1	427-FB
5	O'Ring Retainer	1	427-G
6	Disc Retainer	1	427-H
7	Disc Spacer	1	427-HA
8	Disc	1	427-J
9	Disc Plate	1	427-K
10	Shaft	1	427-L
11	Lower Seat	1	427-M
12	Dynamic O'Ring	1	ORB-114
13	Lower Seat Gasket	1	ORB-233
14	O'Ring Retainer Gasket	1	ORB-237
15	Static Seals	2	424-R
16	Hex Lock Nuts 5/16"-24	2	NUS-1023
17	Int. Lockwasher 1/4"	1	WAS-1008
18	Hex Bolts 3/8 x 6x1-1/8"	6	SCZ-1106
19	Hex Nuts 3/8 x 16	6	NUZ-1026
20	Cap Screws 3/8x16 x 7/8"	2	SCZ-1100
21	Shaft (Normally Closed)	1	427-LL
22	Pipe Plug 1/4" N.P.T.	1	PFG-1003
23	Cap (Limit Stop)	1	427-CCC
24	Static Gasket	1	ORB-112
25	Nut	1	426-U
26	Adj. Screw 5/8"-18 x 3-1/2"	1	SCS-1127
27	Spring (Assist Open)	1	426-S
28	Centering Washer	1	426-V
29	Cap (Spring Assist Closed)	1	427-CC
30	Centering Nut	1	421-AH
31	Spring (Assist Closed)	1	426-SS
32	Spring Retainer Nut	1	426-TT
33	Static Gasket	1	205-M
34	Pipe Plug 1/8" N.P.T.	1	PFB-1000

Repair Kits:

* Diaphragm Seal Kit consists of:
items no. 4,8,12,13,14,15(2) 427-RA

* (N.O.) Internal Parts Kits consists of
items no. 3(2),5,6,7,9,10,16(2),17 . . . 427-RB

NOTE: When ordering parts please include pipe sizes.

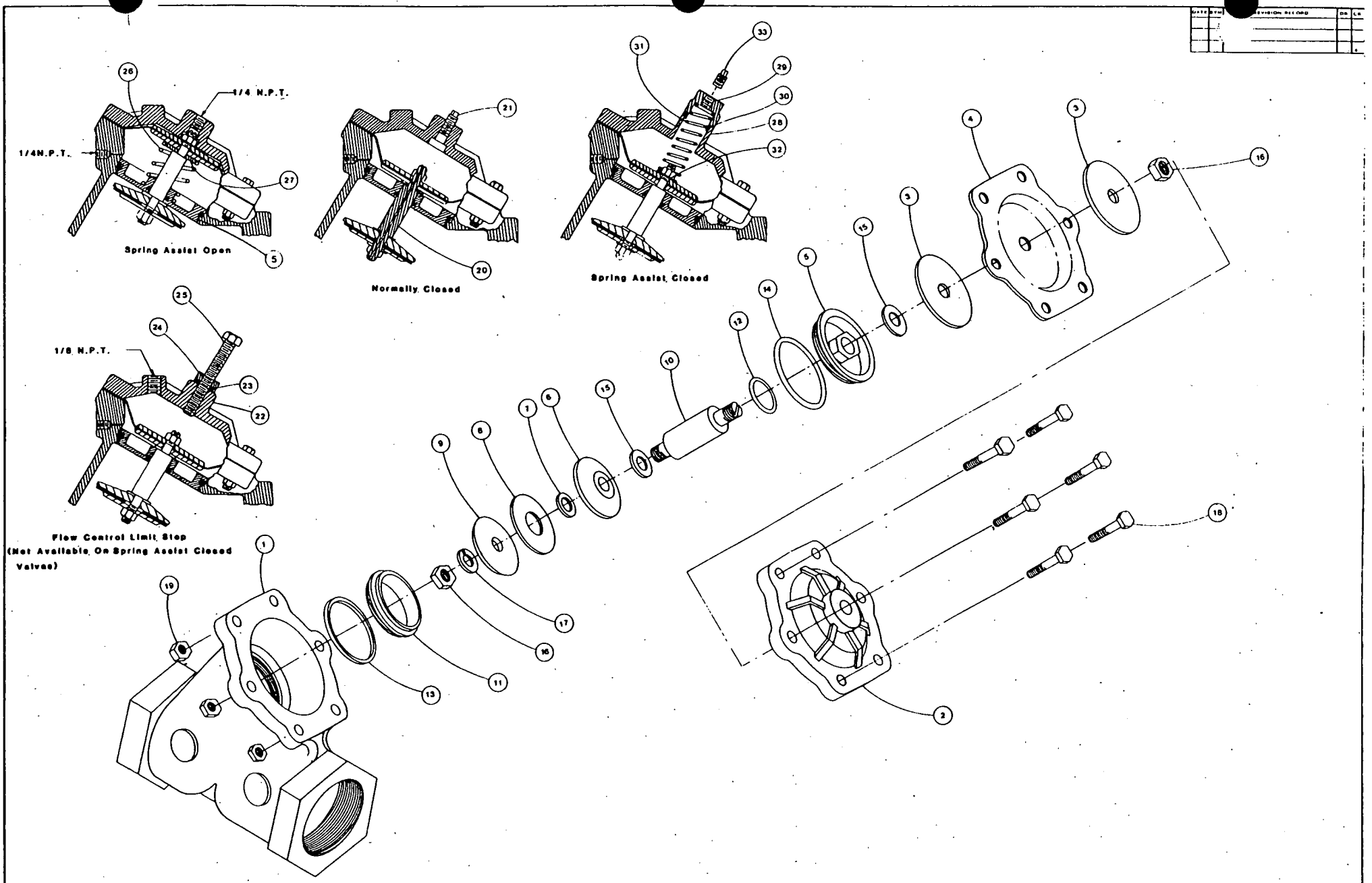

TOLERANCES (EXCEPT AS NOTED)	Monarch Water Systems Dayton Ohio		
DECIMAL		SCALE	DRAWN BY CAL
			APPROVED BY
FRACTIONAL	TITLE 425 DIAPHRAGM VALVE		
ANGULAR	DATE 2-6-84		C-0363

BRUNING 40-21

Series 425 Diaphragm Valve
Parts List

Item No.	Description	No. Re'qd.	Part No.
1	Body (see note)	1	425-A
2	Cap	1	425-C
3	Diaphragm Plates	2	425-D
4	Formed Diaphargm	1	425-FB
5	O'Ring Retainer	1	425-G
6	Disc Holder	1	425-H
7	Disc Spacer	1	425-HA
8	Disc	1	425-J
9	Disc Plate	1	425-K
10	Shaft	1	425-L
11	Lower Seat	1	425-M
12	Dynamic O'Ring	1	ORB-206
13	Lower Seat Gasket	1	ORB-035
14	O'Ring Retainer Gasket	1	ORB-038
15	Static Seals	2	424-R
16	Hex Lock Nuts 5/16"-24	2	
17	Int. Lockwasher 5/16"	1	
18	Hex Bolts 5/16"-18x1-3/8"	6	
19	Hex Nuts 5/16"-18	6	
20	Shaft (Normally Closed)	1	425-LL
21	Pipe Plug 1/4" N.P.T.	1	
22	Cap (Limit Stop)	1	425-CCC
23	Static Seal	1	ORB-112
24	Nut	1	426-U
25	Adj. Screw 5/8"-18 x 2-1/2"	1	
26	Spring (Assist Open)	1	426-S
27	Centering Washer	1	426-V
28	Cap (Spring Assist Closed)	1	425-CC
29	Spring Retainer Nut	1	424-TT
30	Static Gasket	1	204-M
31	Spring (Assist Closed)	1	424-SS
32	Centering Nut	1	424-X
33	Pipe Plug 1/8" N.P.T.	1	

Repair Kits:

* Diaphragm Seal Kit consists of:
items no. 4,8,12,13,14,15(2) 425-RA

* (N.O.) Internal Parts Kits consists of
items no. 3(2),5,6,7,9,10,16(2),17 . . . 425-RB

bürkert

Operating Instructions Type 311/312

Design:
3-way solenoid valve, direct acting, normally closed (Valve Operation C), normally open (Valve Operation D) or mixer function (Valve Operation E).

Seal Materials and Fluids handled:
See Table 1.

Fluid and Ambient Temperature:
See Table 1.

Pressure Range:
Maximum inlet pressure see label on valve.

Installation:
Before installing valve ensure that piping etc. is free of foreign matter (metal filings, seal materials, welding scale etc.). Installation as required but preferably with coil uppermost. Installation in this position tends to prevent foreign matter remaining in core tube (increased life). Do not put any loads on coil unit.

Type 311: Teflon tape is recommended for sealing ports. Mounting is accomplished by means of four M4 x 8 mm tapped holes located on the valve underside.

Type 312: Ports A (B) are coded on side of body. For common pressure, align "A(B)" markings on valve and manifold. Valve operation C and D valves cannot be manifolded together. To remove valve from manifold loosen only the two unsealed screws. Manifolds can be connected together with nipples.

Electrical Connection:
Ensure supply voltage/frequency corresponds with that on valve nameplate. Voltage tolerance is ± 10%. Available Electrical Connections see "Marking". Wiring diagram see reverse page.

Trouble-Shooting:
Check port connections, operating pressure and supply voltage. If core does not pull in, check for short circuit, coil burn-out or foreign matter impeding core movement. A jammed or missing core causes the coil to overheat in the case of AC supply.

Marking (Example):

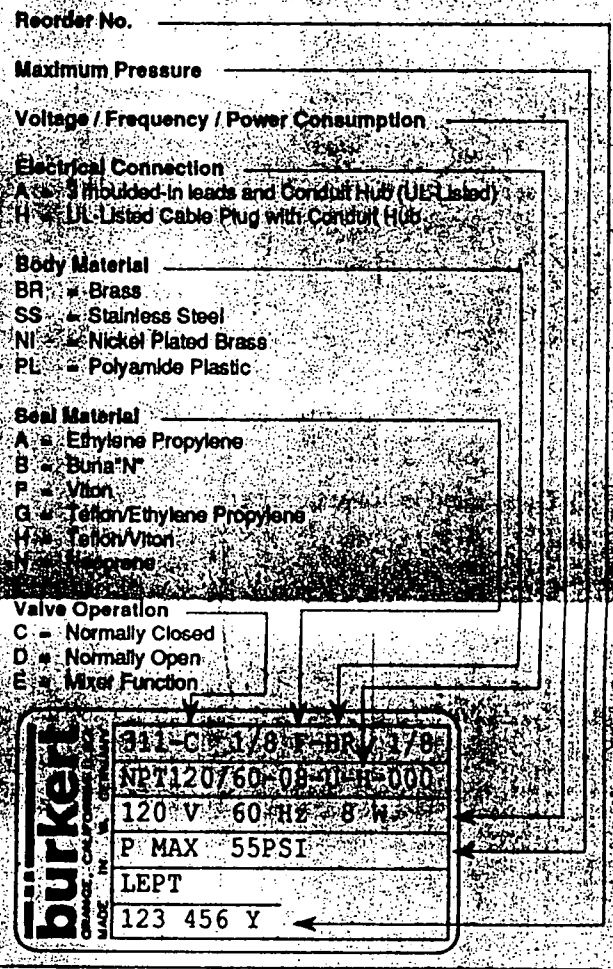

Table 1		Seal Materials					
		Seal/O-ring					
Fluids	Temperatures [°F]	Buna "N" (B)	Ethylene Propylene (A)	Viton (F)	Teflon/ Ethylene Propyl. (G)	Teflon/ Viton (H)	Neoprene (N)
air	Fluid T.	+14 to +194	−40 to +266	+14 to +266	+14 to +266	+14 to +266	
	Ambient	+14 to +130	+14 to +130	+14 to +130	+14 to +130	+14 to +130	
water	Fluid T.	+32 to +194	+32 to +212	+32 to +212	+32 to +212	+32 to +212	
	Ambient	+32 to +130	+32 to +130	+32 to +130	+32 to +130	+32 to +130	
neutral gas	Fluid T.	+14 to +194	−40 to +266	+14 to +266	+14 to +266	+14 to +266	
	Ambient	+14 to +130	+14 to +130	+14 to +130	+14 to +130	+14 to +130	
light oil	Fluid T.	+14 to +194		+14 to +266		+14 to +266	
	Ambient	+14 to +130		+14 to +130		+14 to +130	
LP-gas	Fluid T.	[illegible]		+14 to +140		+14 to +140	
	Ambient	[illegible] +130		+14 to +130		+14 to +130	
refrigerants	Fluid T.						+14 to +194
	Ambient						+14 to +130

Wiring Diagram

Electrical Connection Type H

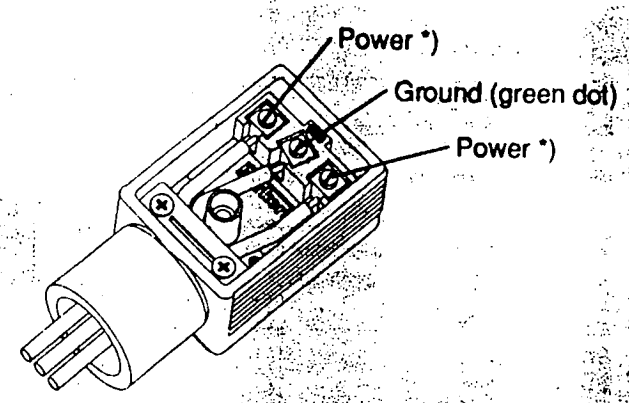

Electrical Connection Type A

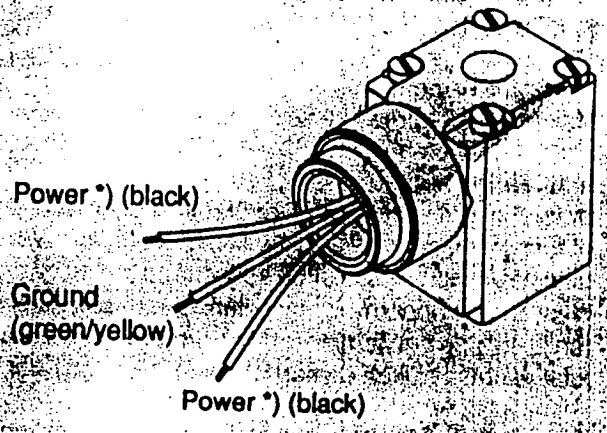

*) Orientation is not important

5000/05/94 M 1893135 H

Bürkert
Steuer- und Regeltechnik
Christian-Bürkert-Str. 13-17
74653 Ingelfingen
Telefon (07940) 10-0
Telex 74116
Telefax (07940) 10204

12524 Berlin, Tel. (030) 67991340
63329 Egelsbach, Tel. (06103) 4112
30916 Isernhagen 1, Tel. (0511) 61706
58708 Menden 1, Tel. (02373) 63081
81245 München 60, Tel. (089) 836021/2/3
73760 Ostfildern 4, Tel. (0711) 455018

Australia: Seven Hills NSW 2147, Tel. (02) 6746166
Austria: 1153 Wien, Tel. (0222) 8941333/34/35/36
Belgium: 2100 Deurne, Tel. (03) 325890
Brazil: 05422 Sao Paulo, Tel. (011) 8529377
Canada: Oakville, Ontario L6L 6M3, Tel. (416) 8 47 55 66
Chile: Santiago de Chile, Tel. (02) 6353950
Denmark: 2730 Herlev, Tel. (042) 917233
Finland: 00370 Helsinki, Tel. (0) 8031277
France: 93012 Bobigny [illegible] 103130
Great Britain: Stroud, [illegible] Tel. (0453) 731353
Italy: 20093 Cologno Monzese [illegible] Tel. (02) 2535741/2/3
Indonesia: Jakarta 10140, Tel. [illegible] 2485

Netherlands: 3600 BE Maarssen, Tel. (034) 6595311
New Zealand: Mt. Wellington, Auckland, Tel. (09) 2762600
Norway: 2013 Skjetten, Tel. (06) 844410
Philipines: Manila 3116, Tel. (00632) 8190636
Portugal: 1499 Lisboa/Codex, Tel. (01) 3016261
Singapore: Singapore 1334, Tel. (65) 7453800
South Africa: Alberton 1450, Tel. (011) 907-1116/7/8/9
Spain: 08950 Esplugues de Llobregat, Tel. (03) 3710858
Sweden: 12324 Farsta, Tel. [illegible] 7240120
Switzerland: 6331 Hünenberg/ZG Tel. (042) 381122
Taiwan: Taipei, Tel. (008862) 7722900
Thailand: Bangkok 1010, Tel. (00662) 2582279

bürkert

3/2 Solenoid Valve for Neutral Fluids and Pneumatics

Type 311/312

Ported, Sub-base

Specifications

Orifice Dia (IN)[2]	Cv-Rating Water (GPM)	Cv-Rating Air (SCFM)	Port Connection 311 (NPT)	Port Connection 312	Pressure Range (PSI)[1] Operation C, D, F	Pressure Range (PSI)[1] Operation E	Weight (LBS)
3/64	0.06	1.93	1/8, 1/4	MAN	0-300	0-140	0.66
1/16	0.08	2.63	1/8, 1/4	MAN	0-230	0-85	0.66
5/64	0.13	4.22	1/8, 1/4	MAN	0-140	0-55	0.66
7/64	0.19	6.15	1/8, 1/4	MAN	0-85	0-35	0.66
1/8	0.23	7.73	1/8, 1/4	MAN	0-55	0-24	0.66

[1] Also suitable for vacuum down to 38 torr. These pressure ranges are valid when using the valve in the valve operation under which it was built, e.g., C, D, . If the valve used is different than its constructed operation, refer to the table on page 2 for the allowable pressure ranges.

[2] Relief and body orifices are the same size.

Valve Operations

Symbol

OPERATION C
3/2 valve, normally closed, outlet port A exhausted when de-energized

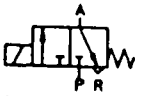

OPERATION D
3/2 valve, normally open, outlet port B pressurized when de-energized

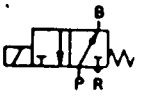

OPERATION E
3/2 mixer, pressure inlet port P_2 n/c, pressure inlet port P_2 n/c; also universal, pressure at any port

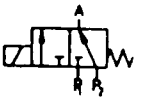

For additional valve operations, see page 2.

Technical Data (Valve)

Installation:	As required (preferably coil uppermost)
Material:	Valve internals of stainless steel. Valve body and seat: Type 311, brass or stainless steel; Type 312, brass or plastic
Maximum Ambient Temp:	130°F
Maximum Viscosity:	Approx. 2.3 x10⁻⁴FT²/sec

Seal Material	Code	Fluids Handled (Examples)	Temperature Range
NBR	B	Neutral fluids, e.g., compressed air, town gas, natural gas, water, hydraulic oil,	+14°F to +194°F
EPDM	A	Oil and fat-free fluids, e.g., hot water, alkaline washing, bleaching lyes	-40°F to +212°F
FPM	F	Fluids for which A and B are not suitable, e.g., hot air, oxygen, perchloroethylene	+14°F to +212°F
CR	N	Refrigerants	+14°F to +194°F

Approx. Response Time Type 311/312		Opening (ms)	Closing (ms)
AC	~	10-15	15-20
DC	=	15-20	18-22

Measured at outlet port A or B on energizing / de-energizing until attainment of pressure rise to 90% / pressure drop to 10% of the highest possible operating pressure up to a maximum of 85 PSI.

Technical Data (Actuator)

Coil Voltage:	Standard 12/DC, 24/DC, 24/60, 120/60, 240/60[3] Available AC 12-440V, 50 or 60Hz, DC 6-220V
Voltage Tolerance:	± 10%
Power Consumption:	AC 21 VA (Inrush), 12 VA/8 W (Hold) DC 8 W[4]
Duty Cycle:	100% continuous rating, manifold valves 60%
Cycling Rate:	up to 1000 cycles/min
Electrical Connection:	E = Spade connection H = UL listed plug (For UL listed valves only.)

[3] The 120V/60Hz, and 240V/60Hz coils can be used at 110V/50Hz and 220V/50Hz, respectively.

[4] Also available in 5 watt and 2 watt coils at reduced pressures. Consult factory.

Agency Approval Codes

R UL Component Recognized
U UL Listed

Accessories

A-1050-S001-021-00 Type F Electrical Connector
A-1050-S016-021-00 Type Y Electrical Connector
A-1010-030M-000-00 Silencer
A-0312-1003-000-00 Connecting Nipple with O-Rings
A-0312-1025-000-00 Blanking Plate
Manifolds for Type312, see page 2.

We reserve the right to make technical changes without notice.

Example for ordering

The necessary details for correct ordering are formulated as shown in the example below.

Example: 311 - C - 1/8 - F - BR - 1/8 - 120/60 - 08 - 0 - E - 000

- Valve Type
- Valve Operation
- Orifice Size
- Seal Material
- Body Material
- Pipe Size
- Coil Voltage
- Coil Frequency
- Coil Watt Rating
- Agency Approval
- Electrical Connection
- Optional Features

Special Features:

Type 311

017 = Manual Override, Brass Body
024 = Stainless Steel Body
047 = Manual Override, Stainless Steel Body

Type 312

017 = Manual Override, Brass Body
041 = Plastic Body
042 = Manual Override, Plastic Body

Type 311

Type 311/312
Ported, Sub-base

3/2 Solenoid Valve for Neutral Fluids and Pneumatics

bürkert

Use in a different valve operation.
Valves supplied for operations C, D, and E are fitted with different springs. If a valve is used in a different operation to that for which it is supplied the maximum permissible operating pressure is altered according to the following table.

Valve Version		Maximum Pressure Rating (PSI) when used as operation:					
Orifice Dia (IN)	Operation	A	B	C	D	E	F
3/64	C, F	300	355	300	35	35	300
	D	35	42	35	300	35	42
	E	230	300	230	140	140	300
1/16	C, F	230	310	230	28	28	310
	D	28	35	28	230	28	35
	E	140	230	140	85	85	230
5/64	C, F	140	200	140	14	14	200
	D	14	20	14	140	14	20
	E	85	140	85	55	55	140
7/64	C, F	85	130	85	10	10	130
	D	10	14	10	85	10	14
	E	50	85	50	35	35	85
1/8	C, F	55	85	55	6	6	85
	D	6	9	6	55	6	9
	E	35	55	35	28	28	55

Manifold Mounting

The 1 to 8 station manifolds have a common channel coded P (R) for the pressure connection, valve operation C (or the exhaust connection or operation D) and a cylinder port A (B) for each valve. Valves with operation E (note pressure range) and Type 212 may be mounted together. Valves with operation D or F can not be manifolded together with valves having operation C.

Manifold assemblies of valves having the same circuit function may be coupled together using special push-fit O-ring connecting nipples for linking the P (R) connections. It is suggested that multiple assemblies be mounted on a support strip.

Ordering example for manifolds

1 STATION	A-0312-0022-001-01
2 STATIONS	A-0312-0022-002-01
3 STATIONS	A-0312-0022-003-01
4 STATIONS	A-0312-0022-004-01
5 STATIONS	A-0312-0022-005-01
6 STATIONS	A-0312-0022-006-01
8 STATIONS	A-0312-0022-008-01

Manifold

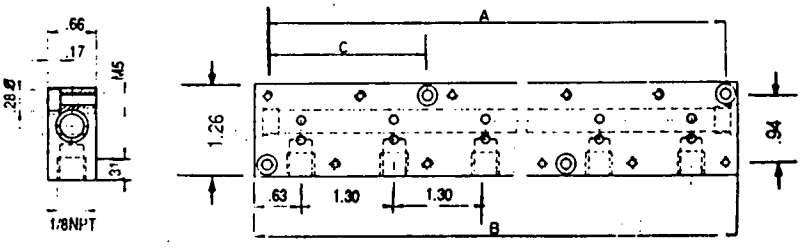

Manifold	1 Station	2 Stations	3 Stations	4 Stations	5 Stations	6 Stations	8 Stations
A (Hole Centers)	0.94	2.24	3.54	4.84	6.14	7.44	10.04
B (Overall Length)	1.26	2.56	3.86	5.16	6.46	7.76	10.35
C (Hole Centers)	-	-	-	-	2.24	2.24	2.24

A (NPT)	B	C	D	E	F
1/8	.33	.31	1.26	2.50	2.89
1/4	.43	.47	1.81	2.78	3.17

Type 311 P rted Version

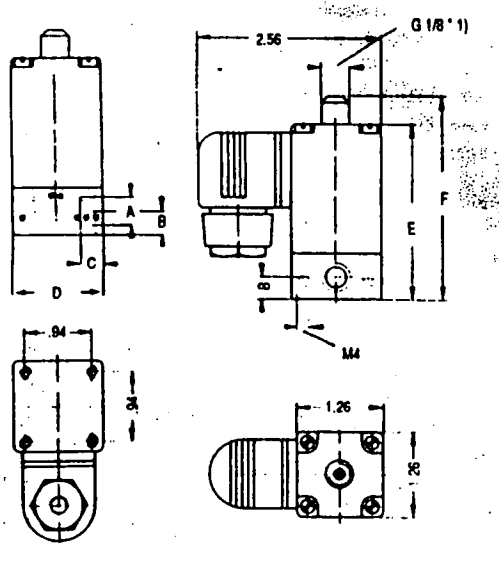

Type 312 Sub-base Version

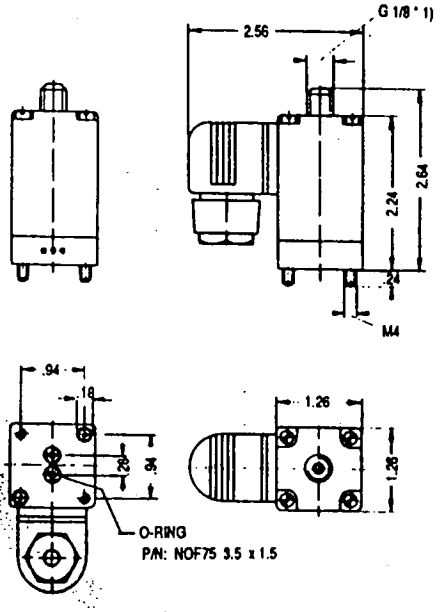

[1] All valves furnished with conversion fitting to 1/8" or 1/4" thread.

NOTE: UNLESS OTHERWISE NOTED, ALL DIMENSIONS IN INCHES.
We reserve the right to make technical changes without notice.

HP5 SERIES
CYCL-FLEX® RESET TIMER
MODEL 9

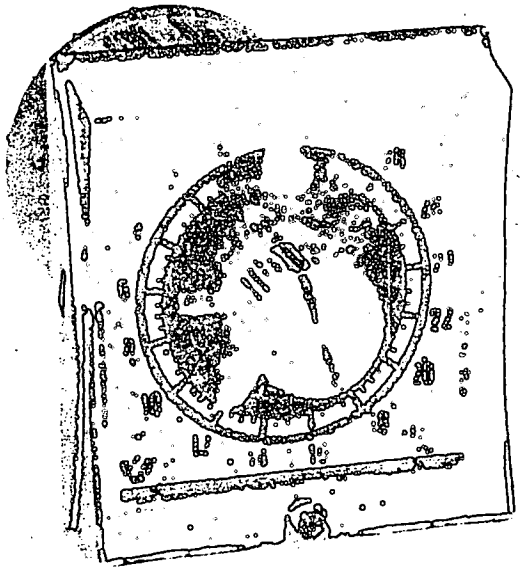

The HP5 CYCL-FLEX® Series is a high quality, synchronous motor driven reset timer housed in the standard CYCL-FLEX® plug-in housing. The HP5 is available in 16 standard time ranges from 5 seconds to 60 hours. Time ranges are knob adjustable and all have a progress pointer. Calibrated dials are highly visible and are 7.85 inches in circumference providing easily read and well spaced calibrations on all ranges. Setting pointer is knife edged red lucite for precision setting. The progress pointer is bright red and displays the remaining time interval.

A pilot light is provided and indicates when the timer motor is energized. Standard timers are supplied with "power on" clutch operation. As an option, a reverse action clutch is available and will not reset on power failure.

The 15 terminal ABS (U.L. rated 94V-0) molded housing has high impact resistance and will not support combustion.

OPERATION

Application of power to terminals 1, 2, and 11 energizes the clutch coil, closes contacts 9-10 and 6-8 and starts the timing period. At time out, contacts 4-3 close, 11-12 open and the motor stops. The timer will remain in this condition until power is removed from the clutch coil.

Contacts 6-7-8 and 9-10-C are instantaneous contacts and operate with the application of power to the clutch coil. Contacts 3-4-5 and 11-12-A operate at time out with contacts 3-4-5 operating prior to contacts 11-12-A.

SPECIFICATIONS

Time Range

Catalog Symbol	[illegible]
[illegible]	[illegible]
[illegible]	[illegible]
[illegible]	[illegible]
[illegible]	[illegible]
[illegible]	[illegible]
[illegible]	[illegible]
[illegible]	[illegible]
[illegible]	[illegible]
[illegible]	[illegible]
[illegible]	[illegible]
[illegible]	[illegible]
[illegible]	[illegible]
[illegible]	[illegible]
[illegible]	[illegible]
[illegible]	[illegible]
[illegible]	[illegible]

Reset Time
1/2 [illegible]

Voltage/Frequency
120 VAC [illegible]
240 VAC [illegible]

Burden
Motor [illegible]
Clutch [illegible]

Output Rating
10 Amps, [illegible]
5 Amps, [illegible]

Electrical Lifetime
Contingent [illegible]
is 250,000 [illegible]
million cycles [illegible]

Power On Voltage
28 ms average [illegible]
17 ms average [illegible]

Operating Temperature
+32° to +140° [illegible]

Vibration
Unaffected [illegible]
directions [illegible]
from [illegible]

Standard Approximation
U.S. [illegible]
CSA [illegible]
F.M. [illegible]

Ordering Information
[illegible]

Cycle Signal
Instantaneous Control

OPERATION

ON Delay

Instantaneous contacts 9-10-C and 6-7-8 operate directly with the clutch offering different sequences of operation depending on the control circuit configuration.

Delayed contacts 4-3 and 11-A close and contacts 4-5 and 11-12 open when timer reaches a timed out condition. Contacts 4-5 and 11-12 close and contacts 4-3 and 11-A open when timer is reset.

OFF Delay

Instantaneous contacts 9-10-C and 6-7-8 operate directly with the clutch offering different sequences of operation depending on the control circuit configuration.

Delayed contacts 4-3 and 11-A close and contacts 4-5 and 11-12 open when timer reaches a timed out position. Contacts 4-5 and 11-12 close and contacts 4-3 and 11-A open when timer is reset.

SCHEMATIC DIAGRAM "ON" & "OFF" DELAY

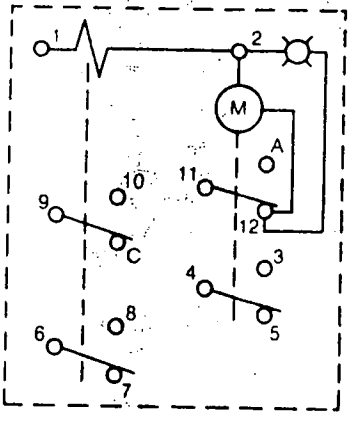

FEATURE "30" SCHEMATIC DIAGRAM "ON" & "OFF" DELAY

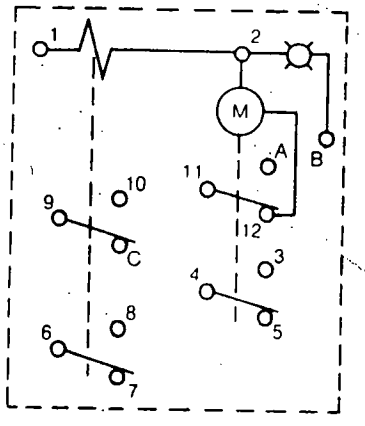

FEATURE "30"

Provides a floating pilot light. This gives several options as to when the pilot light is on, depending on the external connection made to terminal "B".

ON DELAY	Reset	Timing	Timed Out
CLUTCH	OFF	ON	ON
MOTOR	OPTIONAL	ON	OFF
9-10	O	X	X
9-C	X	O	O
4-3	O	O / X	X
4-5	X	X / O	O
11-12	X	X	O
11-A	O	O	X

Switch 3-4-5 is set to operate before switch 11-12-A. The delay between these switches is directly proportional to the timer dial.

OFF DELAY	Reset	Timing	Timed Out
CLUTCH	ON	OFF	OFF
MOTOR	OPTIONAL	ON	OFF
9-10	X	O	O
9-C	O	X	X
4-3	O	O / X	X
4-5	X	X / O	O
11-12	X	X	O
11-A	O	O	X

DIAL	DELAY ADJ.	DIAL	DELAY ADJ.
5 Sec	25 ms to 75 ms	15 Min	4.5 Sec to 13.5 Sec
10 Sec	50 ms to 150 ms	30 Min	9 Sec to 27 Sec
15 Sec	80 ms to 225 ms	60 Min	18 Sec to 54 Sec
30 Sec	150 ms to 450 ms	150 Min	45 Sec to 135 Sec
60 Sec	300 ms to 900 ms	5 Hr	1.5 Min to 4.5 Min
150 Sec	800 ms to 225 Sec	10 Hr	3 Min to 9 Min
5 Min	1.5 Sec to 4.5 Sec	30 Hr	9 Min to 27 Min
10 Min	3 Sec to 9 Sec	60 Hr	18 Min to 54 Min

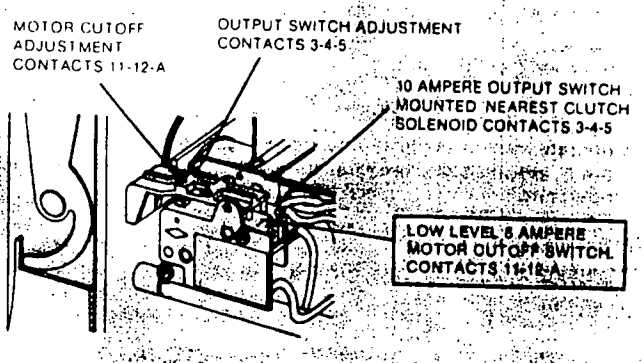

WIRING DIAGRAMS

ON DELAY HP5 CYCL-FLEX® TIMER

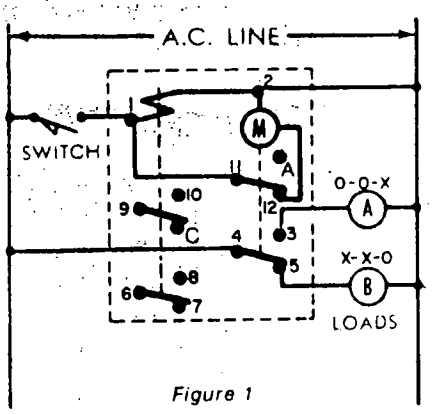

Figure 1

Sustained Control Switch. Close to Start, Open to Reset - Simple delayed closing and opening of load circuits.

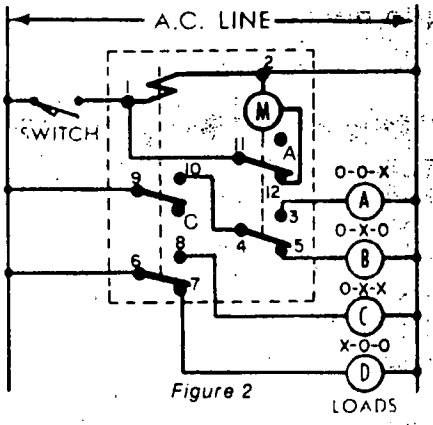

Figure 2

Sustained Control Switch. Close to Start, Open to Reset - Additional load circuit operations obtained by connecting contacts in series.

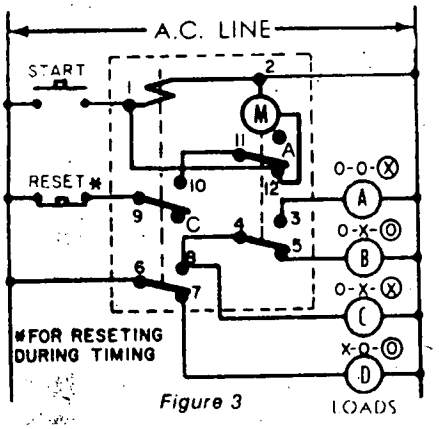

Figure 3

Momentary Control Switch. Close to Start, Resets Automatically - Pushbutton start. Remains in 3rd switch position indicated by Ⓧ or Ⓞ for ½ to 1½% of the dial range.

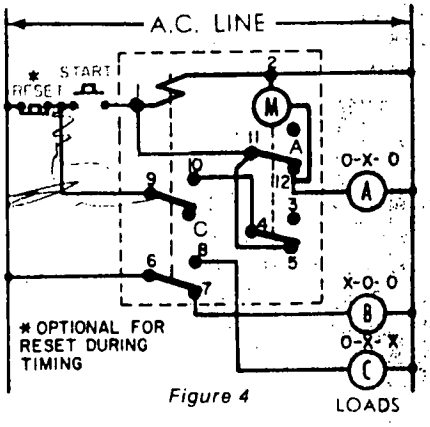

Figure 4

Momentary Control Switch. Close to Start, Resets Automatically - Use when the control switch may not always be opened before end of timing. This circuit insures shutting off timer motor at end of timing.

OFF DELAY HP5-01 SERIES CYCL-FLEX TIMER

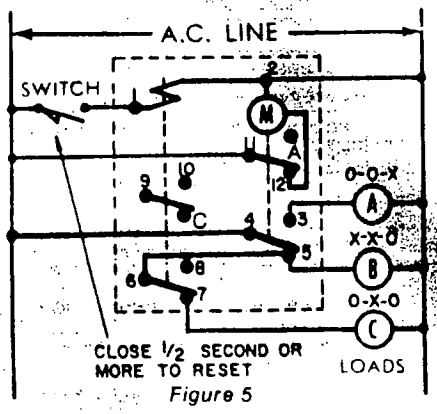

Figure 5

Open Control Switch to Start, Close to Reset - Simple delayed closing and opening of load circuits.

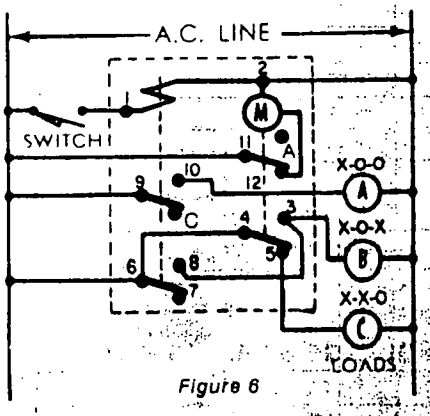

Figure 6

Open Control Switch to Start, Close to Reset - Additional load circuit operations obtained by connecting contacts in series or parallel.

NOTE: Bold lines are internal wiring.

RECEIVED

Material Safety Data Sheet

May be used to comply with OSHA's Hazard Communication Standard, 29 CFR 1910.1200. Standard must be consulted for specific requirements.

U.S. D partment of Labor
Occupational Safety and Health Administration
(Non-Mandatory Form)
Form Approved
OMB No. 1218-0072

IDENTITY *(As Used on Label and List)*
"CARBONITE", ANTHRACITE FILTER MEDIA

Note: Blank spaces are not permitted. If any item is not applicable, or n information is available, the space must be marked to indicate the

Section I

Manufacturer's Name CARBONITE FILTER CORPORATION	Emergency Telephone Number (717) 467-3350
Address *(Number, Street, City, State, and ZIP Code)* P.O. BOX No. 1	Telephone Number for Information (717) 467-3350
DELANO, PENNSYLVANIA 18220-0001	Date Prepared MAY 18, 1990
	Signature of Preparer *(optional)*

Section II — Hazardous Ingredients/Identity Information

Hazardous Components (Specific Chemical Identity; Common Name(s))	OSHA PEL	ACGIH TLV	Other Limits Recommended	% (opt
NONE!				

Section III — Physical/Chemical Characteristics

Boiling Point	N/A	Specific Gravity (H_2O = 1)	1.60 A'
Vapor Pressure (mm Hg.)	N/A	Melting Point	N/A
Vapor Density (AIR = 1)	N/A	Evaporation Rate (Butyl Acetate = 1)	N/A

Solubility in Water
NONE!

Appearance and Odor
BLACK, SOLID, ODORLESS.

Section IV — Fire and Explosion Hazard Data

Flash Point (Method Used) NONE! IGNITION AT 840°C (1,710°F)	Flammable Limits	LEL	UEL

Extinguishing Media
WATER (CO_2) OR ANY TYPE OF EXTINGUISHING MEDIA AVAILABLE.

Special Fire Fighting Procedures
NONE!

Unusual Fire and Explosion Hazards
NONE!

Section V — Reactivity Data

Stability	Unstable		Conditions to Avoid TEMPERATURE ABOVE 900°F
	Stable	X	

Incompatibility (*Materials to Avoid*) NONE!

Hazardous Decomposition or Byproducts NONE!

Hazardous Polymerization	May Occur		Conditions to Avoid
	Will Not Occur	X	

Section VI — Health Hazard Data

Route(s) of Entry: N/A Inhalation? Skin? Ingestion?

Health Hazards (*Acute and Chronic*) N/A

Carcinogenicity: N/A NTP? IARC Monographs? OSHA Regulated?

Signs and Symptoms of Exposure N/A

Medical Conditions Generally Aggravated by Exposure N/A

Emergency and First Aid Procedures N/A

Section VII — Precautions for Safe Handling and Use

Steps to Be Taken in Case Material Is Released or Spilled

NONE! IF SPILLAGE OCCURS, MEDIA CAN THEN BE PICKED UP BY USING A BROOM AND SHOVEL, IF MEDIA IS NOT CONTAMINATED, SPILLED MEDIA CAN THEN BE REBAGGED.

Waste Disposal Method

PRIMARILY A LANDFILL.

Precautions to Be Taken in Handling and Storing

AVOID BREAKING BAGS OR SPILLING MEDIA SO AS TO AVOID POSSIBLY CREATING RESIDUAL DUST.

Other Precautions

USE ADEQUATE VENTILATION AND DUST COLLECTION. USE GOOD HOUSEKEEPING SENSE AND AVOID ACCUMULATING DUST.

Section VIII — Control Measures

Respiratory Protection (*Specify Type*)

N/A

Ventilation	Local Exhaust N/A	Special
	Mechanical (*General*)	Other

Protective Gloves NONE!

Eye Protection SAFETY GLASSES.

Other Protective Clothing or Equipment NONE!

Work/Hygienic Practices N/A

• USGPO 1988-491-529/45775

MATERIAL SAFETY DATA SHEET

THE PARRY COMPANY

C. ADDRESS: 219 Church St. Chillicothe, OH 45601

I. PRODUCT IDENTIFICATION

A. Product Name: Quartz Gravel, Filter or Blast Sand

B. Manufacturer: The Parry Company

D. Emergency Phone Number(s): Business: (614) 774-1320 Other:

E. Chemical Name(s) & Molecular Formula(s). Give Specific IUPAC Name(s).: Silicon Dioxide (Silica) SiO_2 (Crystalline Silica) Quartz

G. CAS No.(s): 14808-60-7

F. Synonyms: Quartz; Coesite; Cristobalite; Tridymite

H. Chemical Family: Silica:Natural Mineral Quartz (99%)

II. SPECIFIC GENERIC INGREDIENTS

Include all carcinogens at levels ≥0.1% and all other ingredients at levels ≥1.0%.

A. MATERIALS OR COMPONENTS	B. % w/w	C. CAS#	D. HAZARD DATA (TLV, LD50, LC50, etc.)
N/A	N/A	N/A	N/A

III. GENERAL REQUIREMENTS

A. Use: Post area where sand is used warning of possible lung injury from repeated inhalation of respirable silica dust. Follow OSHA standards for free silic

B. Handling: Wear approved OSHA respirator/dust mask. Dampen sand to minimize dust.

C. Storage: Same as A.

IV. PHYSICAL PROPERTIES

A. Boiling Point/Range	B. Melting Point	C. Freezing Point	D. Molecular Weight (Calculated)
2230 °C 4046 °F	1600 °C 2912 °F	N/A °C °F	60.1

E. Specific Gravity (H_2O=1)	F. Vapor Pressure (mm Hg)	G. Vapor Density (Air=1)	H. pH
2.65 @ 22 °C 72 °F	N/A @ °C °F	essentially 0	6-8

I. Solubility in H_2O	J. % Volatiles by Volume	K. Evaporation Rate
Insoluble	N/A	N/A ☐ Ether = 1 ☐ Water = 1 ☐ Butylacetate = 1

L. Appearance and Odor: Tan-Brown-Buff Granular - Odorless Solid

M. Other: N/A

V. FIRE AND EXPLOSION DATA

A. Flash Point: Not Combustible Test Method

B. Flammable Limits: Lower N/A Upper

C. Autoignition Temperature/Fire Point: N/A °C °F

D. EXTINGUISHING MEDIA: ☐ Water-spray ☐ Water-fog ☐ Water stream ☐ CO_2 ☐ Dry chemical ☐ Alcohol foam ☐ Foam ☐ Earth or sand N/A

E. SPECIAL FIRE FIGHTING PROCEDURES: ☐ Do not enter building ☐ Allow fire to burn ☐ Water may cause frothing ☐ Do not use water ■ None

F. UNUSUAL FIRE AND EXPLOSION HAZARDS: ☐ Dust explosion hazard ☐ Sensitive to shock ☐ Contamination ☐ Temperature ■ None ☐ Other (specify)

VI. REACTIVITY DATA

A. STABILITY: ■ Stable ☐ Unstable

B. CONDITIONS CONTRIBUTING TO INSTABILITY: ☐ Thermal decomposition ☐ Photo degradation ☐ Polymerization ☐ Contamination ■ None

C. INCOMPATIBILITY - Avoid contact with: ☐ Strong acids ☐ Strong alkalis ■ Strong oxidizers ☐ Reducers ☐ Water ☐ None ☐ Other (specify):

D. HAZARDOUS DECOMPOSITION PRODUCTS - THERMAL AND OTHER (list): None

E. CONDITIONS TO AVOID: Crystalline Silica attacked by hydrogen fluoride (hydrofluoric acid) ☐ Heat ☐ Open flames ☐ Sparks ☐ Ignition sources ☐ None ■ Other (specify):

VII. SPILL OR LEAK

A. STEPS TO BE TAKEN IF MATERIAL IS RELEASED OR SPILLED: ☐ Flush with water ☐ Absorb with sand or inert material ☐ Neutralize ■ moisten, Sweep or scoop up and remove ☐ Keep upwind. Evacuate enclosed spaces. ☐ Prevent spread or spill ☐ Dispose of immediately ■ Other (specify): Persons not wearing protective equipment should be restrict from area. Use approved dustless methods (water/vacuum).

B. WASTE DISPOSAL METHOD (Specific): Any secured sanitary landfill. Dampen waste to reduce airborne dust. If dust is generated during handling, use OSHA approved respirator. SiO_2 not a hazardous waste under 40 CFR Part 261 EPA Regulations.

CONTINUED ON REVERSE SIDE ▶

NA — Not Applicable

A. PRIMARY ROUTE(S) OF ENTRY:

☐ Skin absorption ■ Inhalation ☐ Ingestion

VIII. HEALTH HAZARD INFORMATION

B. EXPOSURE LIMITS (Specify if TLV/TWA, Ceiling (c), PEL, etc.)
For Respirable Dust: 10 milligrams silica per cubic meter of air divided by percent SiO_2 averaged over 8 hr. work shift. Total Dust: Same except 30mg
ACGIH 19 ____ OSHA 19 10.100 Table Z-3 Other:

Effects of Exposure

C. INGESTION
Acute: None - But recommend seeking medical advise
Chronic: None - But recommend seeking medical advise

D. DERMAL:
Acute: ☐ Irritant ☐ Corrosive ☐ Sensitizer ☐ Defatter ■ None ■ Other Gloves - Optional
Chronic: ☐ Irritant ☐ Corrosive ☐ Sensitizer ☐ Defatter ■ None ■ Other Gloves - Optional

E. EYE:
Acute: ■ Severe irritant ☐ Mild irritant ☐ Corrosive ☐ None ■ Other Recommend Full Eye Protection
Chronic: ■ Severe irritant ☐ Mild irritant ☐ Corrosive ☐ None ■ Other Same as Above

F. INHALATION:
Acute: ■ Irritant ☐ Allergen ☐ Asphyxiant ☐ Sensitizer ☐ Edema ☐ None ☐ Narcotic effect ☐ Cyanosis ■ Other: See B&H this section
Chronic: ■ Irritant ☐ Allergen ☐ Sensitizer ☐ Carcinogen ☐ None ■ Other See B&H this section

G. SYSTEMIC:
Acute: Specific effect(s)
Chronic: Specific effect(s) Cough and shortness of breath. Pulmonary distress.

H. OTHER TOXIC EFFECTS (Include Aquatic Toxicity and no effect level):
Repeated inhalation of crystalline silica or quartz dustmay cause silicosis a form of disabling, progressive and sometimes fatal pulmonary fibrosis characterized by the presence of typical nodulations in the lungs. Good industrial hygiene ventilation practices should be used to reduce environmental concentrations to the permissible exposure level or OSHA approved respiratory-protection should be used to avoid inhaling dust.

IX. EMERGENCY FIRST AID

A. INGESTION
☐ Induce vomiting ☐ Do NOT induce vomiting ☐ Give plenty of water ☐ Get medical attention ☐ No ill effects ■ Other (specify): Seek Medical Advis

B. SKIN CONTACT
■ No ill eff. or injury expected. ☐ Wash area, remove contaminated clothing immediately. ☐ Wash area, remove garment within reasonable time. ☐ Flush area remove clothing immediately. ☐ Report to Medical Dept.

C. EYE CONTACT
■ Flush with plenty of water for at least 15 minutes ■ Get medical attention ☐ No ill effects ■ Other (specify): See Attached Addendum

D. INHALATION
■ Remove to fresh air ■ If not breathing, provide appropriate life support ☐ Give oxygen ■ Get medical attention ☐ No ill effects ☐ Other (specify):

X. SPECIAL PROTECTION INFORMATION

A. VENTILATION REQUIREMENTS — *Always maintain exposure below permissible exposure limits*
■ Consult an industrial hygienist or environmental health specialist ■ Local exhaust ■ Use with adequate ventilation ☐ Check for air contaminant and oxygen deficiency
☐ Store in well ventilated area ☐ None required ■ Other (specify) (Abrasive Blasting) ANSI Z9.2-1960, OSHA 1910.94(a)

B. EYE
☐ Face shield ☐ Safety glasses ■ Goggles

C. HAND (GLOVE TYPE)
☐ Polyvinyl chloride ☐ Neoprene ☐ Butyl rubber ☐ Natural rubber ☐ Polyvinyl alcohol ☐ Poly-ethylene ☐ Cloth ☐ Leather ■ Other (specify): Gloves- Optional

D. RESPIRATOR TYPE - *Use only NIOSH/MESA approved equipment*
☐ Self-contained ☐ Supplied air ☐ Can or cartridge gas or vapor ☐ Filter - dust, fume, mist ■ Other (specify): See Attached Addendum

E. OTHER PROTECTIVE EQUIPMENT
☐ Rubber boots ☐ Apron ■ Other (specify): See attached U.S.Dept. of Health and Human Services "Occupational Health Guideline for Crystalline Silica"

XI. SPECIAL PRECAUTIONS

A. PRECAUTIONS
☐ Wash thoroughly after handling ☐ Do not get in eyes, on skin or clothing ■ Do not breathe dust. ☐ Keep container closed ☐ Keep away from heat, sparks and open flames ☐ Store in tightly closed containers
☐ Do not store near combustibles ☐ Keep from contact with clothing and other combustible materials ☐ Empty container may contain hazardous residues ☐ Use explosion proof equipment ■ Other (specify): See Attached Addendum

B. TRANSPORATION & OTHER PRECAUTIONS
Advise and post warning to employees where product is used,handled or stored Follow existing OSHA standards or hereafter amended, modified or adopted.

Prepared by	Date	Address	Phone
David Parry	10-1-86	219 Church St., Chillicothe, OH 45601	(614 774-132

Updates:
Revision 1 (10-1-86)

THE PARRY COMPANY

ADDENDUM TO MATERIAL SAFETY SHEETS

RESPIRATORY PROTECTION FOR CRYSTALLINE SILICA

Condition	Minimum Respiratory Protection* Required Above X** mg/m³
Particulate Concentration	
5X** mg/m³ or less	Any dust respirator.
10X** mg/m³ or less	Any dust respirator, except single-use or quarter-mask respirator. Any fume respirator or high efficiency particulate filter respirator. Any supplied-air respirator. Any self-contained breathing apparatus.
50X** mg/m³ or less	A high efficiency particulate filter respirator with a full facepiece. Any supplied-air respirator with a full facepiece, helmet, or hood. Any self-contained breathing apparatus with a full facepiece.
500X** mg/m³ or less	A powered air-purifying respirator with a high efficiency particulate filter. A Type C supplied-air respirator operated in pressure-demand or other positive pressure or continuous-flow mode.
Greater than 500X** mg/m³ or entry and escape from unknown concentrations	Self-contained breathing apparatus with a full facepiece operated in pressure-demand or other positive pressure mode. A combination respirator which includes a Type C supplied-air respirator with a full facepiece operated in pressure-demand or other positive pressure or continuous-flow mode and an auxiliary self-contained breathing apparatus operated in pressure-demand or other positive pressure mode.
Fire Fighting	Self-contained breathing apparatus with a full facepiece operated in pressure-demand or other positive mode.

*Only NIOSH-approved or MSHA-approved equipment should be used.

**X indicates the permissible exposure as defined above.

SUPPLEMENTAL INFORMATION:

A. If crystalline silica dust gets into the eyes, wash eyes immediately with large amounts of water, lifting lower and upper lids occasionally. If irritation is present after washing, seek medical attention.

B. Persons having symptoms of respiratory disease or pulmonary functional impairment should not work in or near areas of exposure to silica dust. The employee should be fully evaluated by a qualified physician on whether they should continue working in a dusty trade. Workers should be advised of the increased risk of impaired health due to the combination of smoking and free silica dust.

Material Safety Data Sheet
May be used to comply with
OSHA's Hazard Communication Standard
29 CFR 1910.1200. Standard must be
consulted for specific requirements.

U.S. Department of Labor
Occupational Safety and Health Administration
(Non-Mandatory Form)
Form Approved
OMB No. 1218-0072

IDENTITY (As Used on Label and List)
Manganese Greensand

Note: Blank spaces are not permitted. If any item is not applicable, or no information is available, the space must be marked to indicate that.

Section I

Manufacturer's Name
Inversand Company

Emergency Telephone Number
609-881-2345

Telephone Number for Information
609-881-2345

Address (Number, Street, City, State, and ZIP Code)
PO #4 Box 169
Dilksboro Rd.
Sewell, NJ 08080

Date Prepared
6/3/91

Signature of Preparer (optional)

Section II — Hazardous Ingredients/Identity Information

Hazardous Components (Specific Chemical Identity; Common Name(s))	OSHA PEL	ACGIH TLV	Other Limits Recommended	% (optional)
Manganese oxide (as Mn)	N/A	N/A	N/A	0.5%

Section III — Physical/Chemical Characteristics

Boiling Point	None	Specific Gravity (H2O = 1)	2.4
Vapor Pressure (mm Hg.)	N/A	Melting Point	None
Vapor Density (AIR = 1)	N/A	Evaporation Rate (Butyl Acetate = 1)	0%

Solubility in Water
0%

Appearance and Odor
Black nodular granules, sand-like in appearance; no odor

Section IV — Fire and Explosion Hazard Data

Flash Point (Method Used)	Flammable Limits	LEL	UEL
N/A	N/A	N/A	N/A

Extinguishing Media
N/A (no fire hazard)

Special Fire Fighting Procedures
N/A

Unusual Fire and Explosion Hazards
N/A

OSHA 174, Sept. 1985

(Reproduce locally)

Section V — Reactivity Data

Stability	Unstable		Conditions to Avoid: None
	Stable	X	

Incompatibility (Materials to Avoid): Contact with concentrated hydrochloric acid--gaseous chlorine would be produced

Hazardous Decomposition or Byproducts: Normally none

Hazardous Polymerization	May Occur		Conditions to Avoid: N/A
	Will Not Occur	X	

Section VI — Health Hazard Data

Route(s) of Entry: Inhalation? Yes Skin? Yes Ingestion? Yes

Health Hazards (Acute and Chronic): Inhalation--normal dust symptoms Ingestion--NOT TOXIC

Eye contact--will act as irritant Skin contact--no acute effects

Carcinogenicity: NTP? No IARC Monographs? No OSHA Regulated? No

Signs and Symptoms of Exposure: Inhalation--normal dust symptoms Ingestion--NOT TOXIC

Eye contact--will act as irritant Skin contact--no acute effects

Medical Conditions Generally Aggravated by Exposure: N/A

Emergency and First Aid Procedures: Eye contact--flush eye with running water; seek medical attention if required.

Section VII — Precautions for Safe Handling and Use

Steps to Be Taken in Case Material is Released or Spilled: Sweep up. See below for waste disposal.

Waste Disposal Method: Bury in licensed landfill according to local, state, and federal regulations.

Precautions to Be Taken in Handling and Storing: Keep away from HCl

Other Precautions: None

Section VIII — Control Measures

Respiratory Protection (Specify Type): "Dust and mist not more toxic than lead" USBM 21B-23, 21B-92, 21B-63, T.C. 21C-132

Ventilation	Local Exhaust	Special
	Mechanical (General)	Other: None required other than for dust

Protective Gloves: None required Eye Protection: Conventional dust protection

Other Protective Clothing or Equipment: None required

Work/Hygienic Practices: Conventional dust protection

F 6

OPERATING AND INSTRUCTION MANUAL

perox-pure™ MODEL LSBD-90/180RA
ULTRAVIOLET LIGHT/HYDROGEN PEROXIDE TREATMENT SYSTEM

Prepared for

BRUNSWICK NAVAL AIR STATION
BRUNSWICK, MAINE

by

VULCAN PEROXIDATION SYSTEMS INC.
5151 E. Broadway, Ste. 600
Tucson, Arizona 85711
(602) 790-8383

The information contained in this manual includes descriptions and procedures which are confidential to Vulcan Peroxidation Systems Inc. The manual shall not be copied nor released to third parties without prior approval from Vulcan Peroxidation Systems Inc.

Issue Date: 02/16/95

Manual No.: 10 of 10

WARNING: THE WATER BEING TREATED BY THE **perox-pure™** SYSTEM MAY BE CONSIDERED A HAZARDOUS WASTE. AS SUCH, ANY SPILL OR DRAINAGE MUST BE HANDLED IN ACCORDANCE WITH ALL APPLICABLE LOCAL AND FEDERAL REGULATIONS. VPSI ASSUMES NO LIABILITY FOR IMPROPER HANDLING.

TABLE OF CONTENTS

	Page
1.0 **INTRODUCTION**	1-1
1.1 Equipment Modifications	1-1
1.2 System Operation	1-1
2.0 **PROCESS DESCRIPTION**	2-1
2.1 The **perox-pure™** Process	2-1
2.2 **perox-pure™** Process Variables	2-1
2.3 Process Considerations	2-1
3.0 **perox-pure™ SYSTEM DESCRIPTION**	3-1
3.1 General Description	3-1
3.1.1 **perox-pure™** Module	3-1
3.1.2 Hydrogen Peroxide	3-2
3.2 Process Flow Path	3-2
3.3 Operating Conditions	3-2
3.4 Alarm Conditions	3-2
3.5 Additional Capacity	3-3
4.0 **SAFETY**	4-1
5.0 **RECEIVING AND INSTALLATION**	5-1
5.1 Receiving	5-1
5.2 Handling	5-1
5.3 Installation - **perox-pure™** Components	5-1
6.0 **OPERATING PROCEDURE**	6-1
6.1 Initial Start-up	6-1
6.2 Start-up Restrictions	6-1
6.3 Start-up Preparations	6-1
6.4 Normal Start-up	6-1
6.5 Normal Shutdowns	6-3
6.6 Hydrogen Peroxide Splitter	6-3
6.7 Monitoring	6-4
6.7.1 Operations/Electrical Log	6-4
6.7.2 Process	6-4
6.7.3 Monitoring Check List	6-4

TABLE OF CONTENTS
(CONTINUED)

	Page
6.8 **perox-pure™** Equipment Maintenance	6-6
6.8.1 Frequency of Service	6-6
6.8.2 Lamp Replacement	6-6
6.8.3 Tube Replacement	6-8
6.8.4 Ballast Replacement	6-9
6.8.5 **perox-pure™** Equipment Cleaning Instructions	6-10
6.9 Recommended Spare Parts List	6-10
6.10 Mechanical Equipment Warranty	6-11
7.0 **TROUBLESHOOTING**	7-1
7.1 General	7-1
7.2 Electrical	7-1
7.3 Low Water Flow	7-1
7.4 Peroxide System Failure	7-2
7.5 Lamp End Enclosure Moisture	7-2
7.6 Lamp End Enclosure Doors	7-3
7.7 Overpressure Relief Flow	7-3
7.8 Lamp Current	7-4
7.9 Lamp Drive	7-4
7.10 Lamp Drive Enclosure Temperature	7-4
7.11 High Water Temperature in Oxidation Chamber	7-4
7.12 Remote	7-4
7.13 Main Breaker Trip	7-5
7.14 Flow Reverser Valve Out of Position	7-5
7.15 Oxidation Chamber Low Water Level	7-5
8.0 **RECORDS**	8-1
8.1 General	8-1
8.2 Log	8-1
8.3 Files	8-1
8.3.1 Correspondence	8-1
8.3.2 Regulatory Agency Reports	8-1
8.3.3 Laboratory Reports	8-1
8.3.4 Purchasing	8-1

1.0 INTRODUCTION

This manual provides a description of the **perox-pure™** Process, equipment, safety, installation, and operating procedures as provided by Vulcan Peroxidation Systems Inc. (VPSI).

The procedures set forth herein represent the best information currently available for this system. In the event that additional information is developed in the future, such information will be issued for incorporation in this manual.

1.1 Equipment Modifications

This equipment is designed and furnished for a specific application. Before use of this equipment for any other than the original application, contact VPSI. Do not modify the equipment or its method of use without approval by VPSI.

1.2 System Operation

Any deviation from operations as described in this manual without prior approval from VPSI shall void all warranty.

2.0 PROCESS DESCRIPTION

2.1 The perox-pure™ Process

The **perox-pure™** Process utilizes a patented application of high intensity ultraviolet (UV) lamps with hydrogen peroxide (H_2O_2) for the oxidation of dissolved organic materials. The equipment is compact and is designed so that UV light emitted by the **perox-pure™** lamps acts on both the H_2O_2 and any organic molecules present. Under these conditions, the H_2O_2 is converted to hydroxyl radicals, which are extremely powerful oxidizers. In addition, the organic molecules absorb energy from the UV light, making them more receptive to the oxidation process. Thus, the UV light and the hydroxyl radicals synergistically promote the rapid breakdown of organic molecules present. When the reaction is carried to completion, hydrocarbon contaminants are converted to carbon dioxide and water. Halogens present in the organic molecule are converted to halides. THERE ARE NO AIR EMISSIONS OR WASTE BY-PRODUCTS FROM **perox-pure™** TREATMENT.

2.2 perox-pure™ Process Variables

The **perox-pure™** Process is dependent upon process variables which are related to the type and concentration of organic contaminants present in the water. The more important process conditions include H_2O_2 dose, UV dose, pH, temperature, and catalysts. The **perox-pure™** Process efficiency can be controlled by equipment design and operational procedures.

If your system process variables have been evaluated in a bench-scale treatability test, the results of these tests are available in the test report previously delivered. This data will be used by the VPSI Service Engineer as an aid in the selection of operating parameters during initial start-up.

2.3 Process Considerations

When the UV lamps are turned on, water flowing through the system is heated. The maximum operating temperature in the **perox-pure™** Equipment is 150°F. A water temperature rise per minute of contact is experienced in the oxidation chamber. See Table 1 below for the approximated temperature rise per minute of contact time. The chamber type is designated by the second letter in the model number. Therefore, the influent water temperature or flow rate must be maintained such that the maximum operating temperature will not be exceeded.

Table 1

Chamber Type	Temperature Rise (°F/min)
V	4
W	4
S	12
SX	24
E	24

3.0 perox-pure™ SYSTEM DESCRIPTION

3.1 General Description

The **perox-pure™** System installed at your location is designed for the chemical oxidation of dissolved organic materials in aqueous solution.

The equipment for the **perox-pure™** System consists of a **perox-pure™** Module. This module is shop-mounted on a skid with piping and wiring. Interconnecting pipe and wiring for this component is provided as indicated on the Piping and Instrumentation Diagram (see Appendix C).

3.1.1 perox-pure™ Module

The **perox-pure™** Module includes oxidation chamber(s), control panel(s) and lamp drive enclosure(s) with controls and piping. The oxidation chamber on the **perox-pure™** Module is lined aluminum or welded stainless steel. The vessel is not an ASME coded vessel and therefore is unsuitable for water pressure in excess of 15 psig. It contains UV lamps mounted horizontally inside quartz tubes. Space may be provided for additional UV lamps.

The **perox-pure™** unit is equipped with a self-cleaning system, the process flow is altered during the cleaning cycle. At a preset time, valves located exterior to the oxidation chamber will direct the influent stream into the top of the oxidation chamber and the effluent is discharged from the bottom. The normal flow path is reinstated after the cleaning cycle is completed.

During normal operation the oxidation chamber is closed to the atmosphere. An over pressure relief system (OPRS) is provided to protect the equipment in the event of an upset condition. The OPRS consists of a rupture disc designed to burst at 20 psig, a flow switch for alarm and shut down when this occurs, and pipe connections for routing of the relief flow. A drain pipe with manual valve is provided from the bottom of each oxidation chamber. Appropriate valves, and temperature and pressure indicators are provided.

The control panel features the process monitoring equipment, system control switches, and alarms. The process monitoring equipment consists of a flow meter, a flow accumulator, an hour meter, and ammeters for each UV lamp. The supplied switches control the system start-up, H_2O_2 system monitoring, and individual UV lamp start-up. A system power cut-off button is also provided in case of emergency. Alarm annunciators are mounted in the control panel to inform the user of the cause of a system shut-down, if one occurs. Acknowledge, reset, and test buttons are provided to control the alarm annunciators.

The lamp drive enclosure houses the high-voltage ballasts which drive each UV lamp. There are no external controls on this enclosure. The enclosure is locked and the enclosure door is supplied with a system shut-down switch to prevent accidental injury of personnel.

3.1.2 Hydrogen Peroxide

Operating instructions for the H_2O_2 splitter system are found in Section 6.6.

3.2 Process Flow Path

Water to be treated flows to the oxidation chamber at the design flow rate and 3 to 15 psig. H_2O_2 solution is injected into the process stream at the entrance to the oxidation chamber and at a point after three (3) lamps.

The process stream enters the bottom of the oxidation chamber, and is directed over the UV lamps. The water then discharges from the top of the oxidation chamber.

3.3 Operating Conditions

The **perox-pure™** System design operating conditions for the Brunswick Naval Air Station, Brunswick, Maine installation are as follows:

Process Flow Rate	130 gpm
Process Temperature	60°F; Influent
Operating Pressure	3 to 15 psig
Power Requirements	90 kW (Refer to Appendix B)

To prevent possible injury and damage to the equipment, the **perox-pure™** system must not be used for treating other waste streams or types of waste without pre-testing by VPSI. If such additional use is desired, contact the VPSI representative.

3.4 Alarm Conditions

Switches/sensors are provided at key points in the **perox-pure™** and peroxide modules to monitor operation. These will shut down the system and indicate the "first out" cause on the alarm panel for the following:

- Low Water Flow
- Peroxide System Failure
- Lamp End Enclosure Moisture - Chamber #1
- Lamp End Enclosure Moisture - Chamber #2
- Lamp End Enclosure Door Open - Chamber #1
- Lamp End Enclosure Door Open - Chamber #2
- Overpressure Relief Flow
- Lamp Drive Enclosure High Temperature
- High Water Temperature in Oxidation Chamber
- Remote Shut Down
- Flow Reversal Valve Out of Position
- Oxidation Chamber Low Water Level

NOTE: Chamber #2 alarms are for future expansion of equiment.

NOTE: The last two alarm conditions are identified by red indicator lights, separate from the annunciator.

See Section 7.0 (Troubleshooting) for a functional description of these alarm conditions and corrective action.

3.5 Additional Capacity

The capacity of the **perox-pure™** System provided for this installation may be increased by the addition of lamps and lamp accessories and the use of appropriate additional quantities of hydrogen peroxide. To protect employees and the equipment, VPSI must be contacted before any modification of the equipment or its operation are implemented.

4.0 SAFETY

To prevent injury, operating and maintenance personnel must be properly trained, alert and must exercise caution when working with the **perox-pure™** System. The following specific safety requirements are presented to insure the safety of operating and maintenance personnel.

4.1 The **perox-pure™** Process operates at up to 3,000 volts. THE MAIN DISCONNECT MUST BE IN THE OFF POSITION BEFORE OPENING THE LAMP DRIVE OR LAMP END ENCLOSURE DOORS FOR MAINTENANCE.

4.2 Exposure to ultraviolet light will cause damage to eyes and burns to unprotected skin. All UV emitting parts are shielded for safety. Nevertheless, it is good policy to always wear plastic, UV-filtering safety glasses when operating the unit. The lamp end enclosure doors at each end of the oxidation chamber must be closed whenever the **perox-pure™** Process is operating.

ANTI-INTRUSION (LIMIT) SWITCHES ARE PROVIDED TO PREVENT OPERATION WHEN LAMP END ENCLOSURE DOORS ARE OPEN. DO NOT INTERFERE WITH OPERATION OF THESE SWITCHES.

4.3 The **perox-pure™** System is designed to oxidize dissolved organics contained in the untreated water. These organics may include carcinogens and toxics. Therefore, maintenance personnel should wear suitable protective clothing, eye protection and breathing apparatus whenever any portion of the process piping or pump must be disassembled for repair, or when the oxidation chamber access panels are opened.

4.4 Sight ports are provided for viewing of each lamp and quartz tube. The sight port glass consists of two parts, a quartz window covered by a blue plastic shield. The plastic shield filters out UV light to allow visual inspection without injury.

DO NOT REMOVE BLUE PLASTIC SHIELD FROM SIGHT PORT. EYE DAMAGE MAY RESULT. USE UV-FILTERING SAFETY GLASSES WHEN OPERATING UNIT.

4.5 <u>EXTREME CARE</u> is to be taken when inserting or removing quartz tubes. Quartz is very resistant to stresses, but the tube end is the most likely part to facilitate tube failure. Broken tubes may cause severe injury.

5.0 RECEIVING AND INSTALLATION

5.1 Receiving

When the equipment arrives at the project site, immediately inspect for missing parts or damage and note in detail on shipping documents any damage or shortage found. VPSI must be notified within ten (10) days of any damage or shortage. The unit must be carefully lifted from the truck and placed on a pad as shown on the **perox-pure™** System Arrangement Drawings (see Appendix C).

5.2 Handling

The VPSI equipment is mounted on a rigid steel skid for ease in handling. DO NOT LIFT FROM ANY POINT EXCEPT THE SKID. Fork lift slots are provided in the web of the skid frame. Lifting holes are provided at each corner of the skid. These may be used with slings and hooks or shackles. Depending upon the length of the slings, a spreader bar may be required. A nylon sling will avoid damage to the skid mounted components. If chain or cable slings are used, place pads beneath the slings where in contact with any skid mounted components.

Note the module weight from the equipment Arrangement Drawing in Appendix C. Use fork lift or crane of proper capacity. Note that the **perox-pure™** Module weight will be concentrated in the area of the lamp drive enclosure. Adjust pickup points accordingly.

5.3 Installation - perox-pure™

Refer to the **perox-pure™** System Arrangement Drawing in Appendix C for location of components and anchor bolt details. Note clearance requirements shown on the drawings. These are required for maintenance and National Electric Code (NEC) compliance.

1. Level the unit by shimming and bolt securely to the pad. It is recommended that the base channel be grouted approximately 1" above the foundation surface. Grout should be placed in 1 foot lengths at the base corners and at the quarter points along each side. Gaps in the grout are necessary to allow drainage from within the base.

2. Connect influent, to oxidation chamber, to pipe section with flow sensor. Connect effluent to other remaining pipe. Both connects are on vertical pipe, flanged, 3" CPVC.

3. Install appropriate drainage piping to both the oxidation chamber drain valve(s), and the over pressure relief.

4. The remaining installation work within the **perox-pure™** Module skid and the H_2O_2 monitoring system will be performed by the VPSI Field Engineer prior to start-up.

5. Install 1/4" stainless steel tubing from hydrogen peroxide pumps to chemical injection (located underneath the peroxide splitter).

6. Termination of interconnecting peroxide pressure monitoring wires will be performed by VPSI Field Engineers.

7. Install compressed air line to valve (V102 Print P1823A1-251).

8. Connect 480/V/3PH/60HZ electrical service of appropriate capacity to the circuit breaker in the panel mounted on the exterior of the **perox-pure™** Module. (See Print P182070-251). Note power requirements and select proper wire sizes. Connect and wire in accord with appropriate electrical codes. If the power supplied is other than specified, contact VPSI.

6.0 OPERATING PROCEDURE

6.1 Initial Start-up

DO NOT ATTEMPT INITIAL START-UP OF THE **perox-pure™** SYSTEM WITHOUT THE PRESENCE OF VPSI PERSONNEL.

Initial start-up of the **perox-pure™** System requires completion of the system assembly, wiring terminations, safety and leak checks, calibrations, and measurements to be performed by a VPSI field engineer. Installation steps as described in Section 5.3 should be completed prior to arrival of the VPSI Field Engineer. Coordinate this completion with the VPSI Field Operations Department.

6.2 Start-up Restrictions

When the **perox-pure™** System starts, a time delay relay in the low flow shut off circuit is energized. This permits the system flow to exceed the low flow shutdown levels during start-up. The relay is adjustable in the range of 0-300 seconds and is pre-set to 120 seconds. If flow does not reach the minimum setpoint within that time, the system will shutdown.

The oxidation chamber has a low level monitor with, a time delay, preset to a maximum of 60 seconds. The chamber has to be flooded within that time frame or the system will shutdown.

Also, at start-up, a time delay relay in the H_2O_2 pressure switch shutdown circuit is energized. The relay is adjustable in the range of 0-300 seconds and is pre-set to 120 seconds. If the H_2O_2 system is not properly operating, the system will shutdown.

At the initial start-up, the flow time delay relays will be set by the VPSI Field Engineer to the minimum required to avoid shutdown.

6.3 Start-up Preparations

Before the **perox-pure™** System is started, the following preparations must be made.

1. The electrical power at the main disconnect and the circuit breaker on the **perox-pure™** Equipment must be in the ON position.

2. All valves must be in the proper position. ANY EFFLUENT VALVES DOWNSTREAM OF THE SYSTEM MUST BE IN THE FULLY OPEN POSITION. Verify that the adjustable orifice plates are aligned properly.

3. The chemical pumps should be set to achieve the required chemical dosages.

6.4 Normal Start-up

To start-up the system, the following steps should be completed in order.

1. Turn the selector switches, for hydrogen peroxide and for the splitter pump, to ON. Selection of these circuits will activate hydrogen peroxide monitoring systems when control power is activated.

2. Turn the main control power switch, located on the control panel, to the ON position.

3. Establish a water flow through the oxidation chamber. The water may be either contaminated, or fresh, depending upon the local effluent regulations. (Note: Contaminated water will not be organic-free until the start-up operations have been completed). The water flow must be set at a minimum of 20% of the maximum rate on the flow meter, in order to avoid a low flow shutdown.

4. DO NOT START THE LAMPS UNTIL THE OXIDATION CHAMBER IS FULL TO AVOID OVERHEATING AND/OR CHAMBER DAMAGE. A full oxidation chamber is indicated by flow from sample port #3 (Valve V125; Print P1823A1-251). With the lamp control switch in the OFF position, position the switch for each lamp to be used to ON, then turn on the lamp control switch. Activating lamps in a group of three (3), (1,2,3) or (4,5,6) will help to hold a balanced load on the supply line during the initial start-up line surge. After the initial selection and activation, remaining lamps can be staged on. The ammeter for each lamp should jump to a start-up amperage and drop to an operating amperage after approximately 2 minutes of operation.

   The following chart specifies the start-up and operating amperage based on lamp type.

Start-up Amperage	Operating Amperage	Chamber Type
8	6	SSB-30
10	7-8	V
10	7-8	W
10	7-8	S
20-22	20-21	SX
20-22	20-21	EX

5. Initially adjust the splitter rotometer to mid-point. Check the H_2O_2 dosage using a graduated cylinder to measure the rate of H_2O_2 flow through the pump. If it is not at the design dosage, adjust the pump.

6. If the system is started up on clean water, begin the changeover to contaminated water by increasing this flow and decreasing the clean water flow. Be careful not to drop the total water flow to below the low flow cutoff setting.

Once the above steps have been completed, the system is fully operational. However, the appropriate switches must remain in the operating positions.

When initial start-up and operator training are completed, normal operation and monitoring of the **perox-pure™** System may begin.

6.5 Normal Shutdowns

To shut the system down, the following steps should be accomplished in order.

1. Stop the H_2O_2 flow.

2. Turn off each of the lamps, then turn off the master switch for UV lamp power.

3. Turn off the main control power at the control panel.

5. If shutdown is for quartz tube replacement, overnight in freezing locations or for a long period, drain the oxidation chamber to an appropriate location.

6. Shut off the main electrical disconnect and lock it out, after the lamp drive enclosure fan has timed out.

6.5.1 Freeze Protection

The oxidation chamber is equipped with a freeze relief drain valve with a temperature set point of 35°F.

6.6 Hydrogen Peroxide Splitter

1. Set the H_2O_2 pump for the appropriate stroke and frequency.

2. The **perox-pure™** unit should be on-line with lamps burning and the chambers full.

3. Start feeding the H_2O_2 at the desired feed rate. Allow about 15 minutes for the system to stabilize. Take H_2O_2 residuals after reactor #3 (V109) and effluent (V125). (See Print P1823A1-251.)

4. Based on H_2O_2 residuals, adjust flow to each injection point up or down with needle valve to increase or decrease feed to obtain the desired H_2O_2 residual. Rotometer readings are only indicators of how H_2O_2 is being proportioned. Do not rely on the reading of the rotometer. The H_2O_2 residual is the only criteria of importance. You may need to increase or decrease total flow of 50% H_2O_2 being fed if desired residuals can not be obtained with splitter.

5. Once the residuals are set to the appropriate concentration(s), flow variations, contaminant concentrations, tube coating, and lamp output are some items that can change the residual(s). The splitter rotometer readings may change for various reasons, however do not readjust rotometer if proportional without first confirming that the desired residual is not as originally set.

Notes: System should be operating with a differential pressure. The recycle line should be wide open and the pressure to the splitter pump should be greater than the pressure on

the discharge line where the recycle line is coupled. This is accomplished with valving and/or an orifice plate. There should be about 5-10 psi back pressure on the **perox-pure™** unit.

Problems: Flow sensor, needle valves, injectors, and rotometers can all get debris from pipe dope or from the water being treated. A clogged y-strainer or elevated water temperature can also cause the splitter not to function. If the splitter does not function, look for restrictions in any of these items.

6.7 Monitoring

6.7.1 Operations/Electrical Log

VPSI has provided an OPERATIONS and ELECTRICAL LOG forms (Section 8.0) for recording system operation data. This information is extremely helpful in optimization of system operation and correction of operating problems, and should be recorded regularly.

The **perox-pure™** System has automatic controls and safety shut-offs such that constant attention is not required. If the system is run continuously, it should be visited once per day with readings taken and recorded in the OPERATION LOG form (Refer to Check List Section 6.6.3).

If the system is started and stopped periodically, check ammeters approximately five (5) minutes after start-up and just before shutdown and record in the ELECTRICAL LOG.

6.7.2 Process

System performance in terms of effluent treatment objectives should be checked at regular intervals and recorded on the OPERATION LOG form provided in Section 8.0. Performance may deteriorate over time due to reduction in UV output from the lamps and possible fouling of the quartz tubes. If uncorrected, performance could fall below treatment objectives. If a VPSI Service Contract has been purchased, VPSI will monitor the lamps and replace lamps and/or clean tubes as required. If a VPSI Service Contract has not been purchased, the lamps should be replaced after 3,000 hours of operation.

6.7.3 Monitoring Check List

During operation of the **perox-pure™** System, monitoring checks should be made regularly to determine that the system is performing properly. Record readings as described below on the OPERATION LOG form enclosed in Section 8.0.

6.7.3.1 Flow Rate. The flow meter should indicate approximate design flow. A valve or other flow control device at the supply pump discharge may be used to adjust the flow rate.

NOTE: DO NOT THROTTLE DOWNSTREAM OF THE OXIDATION CHAMBER.

Record any flow changes made. Record flow at least daily.

6.7.3.2 Oxidation Chamber Pressure. Oxidation chamber pressure must be below 15 psig. Higher pressure indicates a restriction which must be corrected. Refer to Section 7.0 (Troubleshooting) if high pressure occurs. Record pressure after any flow change. Record pressure at least daily.

6.7.3.3 Oxidation Chamber Temperature. As the process proceeds, the water temperature will increase in the oxidation chamber due to heat radiation from the lamps. Water flow at the design rate should limit the oxidation chamber temperature to below 150°F. Refer to Section 7.0 (Troubleshooting) if problems occur. Record temperature after any flow change. Record the influent and effluent temperature at least daily.

6.7.3.4 UV Lamps. The current for each lamp is measured by an ammeter mounted in the control panel. When a lamp becomes inoperative, the ammeter will indicate no current. Lamp deterioration will often be marked by progressive change in lamp current. To aid in system analysis, read and record lamp current after start-up and just before shutdown, or at least daily on continuously run systems.

6.7.3.5 H_2O_2 Concentration. In order for the **perox-pure™** Process to proceed, there must be sufficient H_2O_2 concentration in the influent to the oxidation chamber. This is monitored by measuring the H_2O_2 concentration after operation has stabilized using the Peroxide "Quant Strips." Read and record H_2O_2 concentration after each flow change.

6.7.3.6 Sampling. Valves are provided on the influent and effluent spool pieces as well as one location in the oxidation chamber. Use these valves for sampling to determine contaminant concentrations and to confirm that performance meets treatment objectives. Sample frequency is determined by plant policy or regulatory agency requirements. VPSI will perform this function if contracted to do so.

6.7.3.7 Lamp Drive Enclosure Temperature. The lamp drive system life will be shortened by operation above 140°F. Cooling fan(s) are provided to keep the lamp drive enclosure below this temperature. A dial thermometer is provided in the side of the enclosure. Read and record this temperature at least daily, during the hottest part of the day. A steady upward temperature trend may indicate fan intake filter blockage. A sudden increase in enclosure temperature indicates fan failure (Refer to Troubleshooting Section 7.0).

6.8 perox-pure™ Equipment Maintenance

6.8.1 Frequency of Service

		Frequency of Service
1.	Physical inspection of the electrical and mechanical components of the **perox-pure™** equipment to insure proper function.	Daily
2.	Record in an operational log book, operating parameters and measurements such as: a. flow indicator and cumulative flow measurements b. individual lamp current readings c. operational hour meter reading d. temperature and pressure indicator measurements e. H_2O_2 residual	Daily
3.	Lamp, quartz tube and component cleaning and replacement to maintain optimum performance.	As req'd
4.	Periodic calibration of all meters, pumps and gauges.	As req'd
5.	Lamp replacement	3,000 hrs.
6.	Lubrication	NA
7.	Check lamp drive enclosure air filter and replace if necessary.	Monthly

6.8.2 Lamp Replacement

1. Turn off and lock out main power to unit as required by plant policy or local regulations.

2. Wait two (2) minutes for capacitors to discharge then open both lamp end enclosures to allow cooling of the lamps. Test circuits for voltage to verify being unenergized.

3. Remove terminal block cover to the outed lamp lead and disconnect lamp lead. NOTE: REACTORS ARE NUMBERED 1 THROUGH 6 FROM BOTTOM TO TOP RESPECTIVELY.

4. Remove phenolic end cap. Gently pull lamp lead to remove aluminum lamp end support.

5. Repeat steps 3 and 4 for other end.

6. Remove lamp from end of reactor with 8' clearance. DO NOT TOUCH LAMPS WITH BARE HANDS WHEN HANDLING. A pair of jersey liner gloves will give adequate protection from body oils. Support lamp length when removing and inserting. Maneuver lamps with care as they are mercury vapor (Log lamp serial number and corresponding position).

7. To insert lamp, fold leading lamp lead back onto lamp while guiding into tube.

8. With lamp fully inserted, thread aluminum support along lamp lead and nestle the lamp ceramic end into the support.

9. While keeping slight tension on lead, insert support into tube and move lamp and support into tube with a non-threatening device (e.g. a 12" X 0.25" dowel rod) until approximately 2" of lamp end projects from far end of tube.

10. With gloved hand, grasp the lamp body behind the ceramic end. While holding to minimize any movement, gently pull lamp lead out of tube.

11. Thread onto lamp lead, aluminum support.

12. Push lamp and support into tube.

13. If lamp is still supported on each end by each aluminum support, the support ends should just about match the length of the tube. If the ends do not match, the lamp has probably come out of a support.

14. Reinstall the phenolic end caps. Orient the weep holes to drain.

15. Re-connect lamp leads to correct circuit. Install terminal block cover.

16. Check to see that lamp lead will not catch in any pinch points.

17. Close lamp end doors.

18. Power up unit.

6.8.3 Tube Replacement

1. Turn off the main power to the equipment.

2. Open both lamp end enclosures and allow the lamps to cool.

3. Drain the oxidation chamber while opening an effluent valve for vacuum break. (V103 for Vacuum, V107 for Drainage; Print P1823A-251).

4. Remove the lamp from the damaged tube by following steps 1 through 6 in Section 6.9.2.

5. Unscrew the two nuts holding the o-ring assembly using the lamp-end wrench. Remove the assembly noting the order of removal for each piece; compression plate, compression washer, lamp o-ring and o-ring retainer, and gasket.

6. Discard the o-rings and replace with new ones.

7. Repeat steps 5 and 6 at the other end of the same tube.

8. Begin removal of hand hole covers by loosening all four (4) retaining nuts and breaking the seal between the gasket and the manifold. NOTE: BREAKING OF SEAL WILL EXPOSE PERSONNEL TO RESIDUAL PROCESS FLUIDS. EXERCISE PROPERTY SAFETY PROCEDURES.

9. With seal broken, remove three (3) of the four (4) retaining nuts and clips. While holding onto one (1) stud, remove the fourth nut and clip. DO NOT LET COVER FALL INTO MANIFOLD AS TUBE DAMAGE CAN OCCUR.

10. Lean cover against tube.

11. Slide cover up into manifold, above tube, so as to be able to remove it diagonally. If there is a shuttle remaining behind the cover, it needs to be moved into the reactor. Relocating the shuttle will greatly enhance cover removal.

12. Remove the tube carefully since support is at the ends of the chamber. If the equipment is fitted with tube cleaners, care must be exercised to insure the tube is removed from the shuttle. Back the tube out of one end of the shuttle. Remove cleaning device(s), continue tube removal from shuttle and chamber. Clean with sponge and window cleaner, or non-abrasive cleanser or non-abrasive scouring pad.

13. On replacement tube, install tube cleaner installation tool into one end of tube, insert into chamber and through one end of shuttle. With tool half-way through shuttle, install cleaning device(s) over tool end and ramp up

and onto tube. Continue tube installation through other end of shuttle and out of chamber. Attention must be given to lagging tube end so as not to pull into chamber and allow to drop into manifold and damage tube.

14. Grasp the tube with one hand to steady and push shuttle as far as possible into the chamber. Place under both ends of tube an alignment tool (just inside the chamber). The alignment tool places the tube concentrically in reactor. Adjust tube to have a projection of approximately equal distance into each lamp end. Install sealing assembly in reverse order of removal.

15. On reactors #1 and #6 that have only one access hole, on installing a tube, the shuttle needs to be driven approximately 80% of the length to the other end. The shuttle will then serve as the alignment tool.

16. When tightening assembly, make sure that neither the compression plate nor washer are touching the tube. If either are resting on the tube, then the accompanying sealing pressure can fracture the tube.

17. Remove alignment tools, install hand hole covers.

18. Dry the bottom of the lamp end enclosures. Complete the drying by use of a hot airgun if available, paying special attention to the moisture sensor. DO NOT DISABLE OR ATTEMPT TO OPERATE THE SYSTEM WITHOUT A MOISTURE SENSOR INSTALLED IN EACH LAMP ENCLOSURE. Use spare as necessary.

19. Fill chamber and check for leaks, correct if necessary.

20. Install lamps following steps 7 through 18 in Section 6.9.2.

6.8.4 Ballast Replacement

1. Turn off and lock out main power to unit as required by plant policy or local regulations. NOTE; MAKE SURE THAT THERE IS ADEQUATE PHYSICAL OR MECHANICAL HELP AVAILABLE TO MAKE EXCHANGE. A 15 KW BALLAST WEIGHS APPROXIMATELY 200 POUNDS.

2. Wait two (2) minutes for capacitors to discharge.

3. Open ballast chamber door. NOTE: IF LAMP CIRCUIT WAS ACTIVE, BALLAST WILL BE HOT TO THE TOUCH.

4. Identify ballast to be replaced. Test circuit for voltage to verify being unenergized.

5. Remove clear plastic angular guard. NOTE WIRE NUMBERS AND TERMINALS ON WHICH THEY RESIDE. DISCONNECT WIRES. THERE MAY BE A COUPLE OF WIRE TIES THAT NEED TO BE REMOVED TO SITUATE WIRES OUT OF THE WAY.

6. Remove the four (4) mounting bolts from the base of the ballast.

7. With help, walk/slide the ballast out of position and out of the chamber.

8. Install replacement ballast by reversing steps 5 through 7.

9. Close ballast chamber door and secure.

10. Ready for re-start.

6.8.5 **perox-pure™** Equipment Cleaning Instructions

1. Perform normal shutdown according to Section 6.5.

2. Lock out pump(s) or install blind flanges(s) as required by plant policy or local regulations.

3. Remove lamps(s) according to Section 6.9.2.

4. Remove tube(s) according to Section 6.9.3.

5. Clean tubes with the least abrasive cleaner and/or scrubbing pad that will remove deposits. For some scale problems acetic acid (vinegar) does an adequate job of removal. Stratches on tubes are excellent nucleating sites for future deposits, be careful in cleaning.

6. Return to service according to Section 6.4.

6.9 Recommended Spare Parts List

perox-pure™ Model (LSBD-90/180RA)

The parts listed below are recommended for stocking by the user to avoid unnecessary delays in process operation. The pricing is current as of September 1, 1994 and is subject to change.

PART NO.	DESCRIPTION	STOCK QTY.	UNIT PRICE
SDS-180-03	Quartz Tube Assembly, 96"	3	$ 286.09
EL270223	UV Lamps, 15 kW	2	$ 646.80
MY000139	O-ring, Viton	12	$ 3.26
MY000124	Lamp End Gaskets, Viton	6	$ 6.05
MR000107	Rupture Disk 2.5", 20 psi	2	177.76
ET156410	Ballast, 15 kW	1	$ 2,710.40
ET300175	Capacitor 3000V, 1.75 μF	2	$ 51.30
MF000200	Air Filter, 15X15X2	2	$ 4.44
SDS-267-01	Gasket, Hand Hole Cover Type "S"	2	$ 39.60
SDS-464-01	Shuttle 6"	1	
SDS-449-01	Tube Wiper	12	$ 27.41

Ordering Information:

Vulcan Peroxidation Systems Inc.
5151 E. Broadway, Suite 600
Tucson, Arizona 85711
Attn: Field Operations Department
(602) 790-8383

6.10 Mechanical Equipment Warranty

Equipment must be operated and maintained in accord with the Operation and Maintenance Manual or warranty is void. If a VPSI Full Service Agreement has been purchased, the equipment will be maintained free of charge and the following warranty conditions do not apply.

UV Lamps. Lamp drives and lamp temperatures must remain in accord with manufacturer's specifications. The supplier warrants useful lamp output to be maintained for a minimum 3,000 hours of operation with no more than 3 on-off cycles per day.

Should lamp performance not be in accordance with above, cost of replacement will be prorated proportional to actual performance.

Lamp Drives. Lamp drives are warranted for one (1) year from date of installation, or eighteen (18) months after the date of shipment, provided power supply is according to manufacturer's specifications. Should lamp drive performance not be in accord with above, cost of replacement lamp drive will be prorated proportional to actual performance.

Quartz Tubes. At the anticipated operating temperatures, quartz is unreactive to any chemical except hydrofluoric acid. Expected life of the quartz tubes is dependent upon water quality, frequency of cleaning, stresses, and amount of transmitted UV. Tubes will be supported to

resist normal stresses but cannot be guaranteed against breakage from careless handling or unforeseen flow or pressure fluctuations. Any breakage occurring during start-up will be presumed to be due to design or manufacturing defect and will be replaced at no charge. Any replacement required after start-up will not be covered by warranty.

Tube O-Rings. It is recommended that tube seals be replaced each time a quartz tube is removed for any reason. This is considered normal maintenance and is not covered by warranty.

Other. Material and workmanship other than listed above are warranted for one (1) year from date of shipment to be free of defects in design or manufacture other than normal wear and tear.

7.0 TROUBLESHOOTING

7.1 General

In the case of unusual operating situations, the annunciator panel will indicate the initial shutdown cause by blinking the appropriate indicator light. Subsequent alarm conditions (which may or may not be due to the first cause) will be indicated by a steady light. Potential system malfunctions are provided with interlocks for shutting down the oxidation process. These include:

- Low Water Flow
- Peroxide System Failure
- Lamp End Enclosure Moisture - Chamber #1
- Lamp End Enclosure Moisture - Chamber #2
- Lamp End Enclosure Door Open - Chamber #1
- Lamp End Enclosure Door Open - Chamber #2
- Overpressure Relief Flow
- Lamp Drive Enclosure High Temperature
- High Water Temperature in Oxidation Chamber
- Remote Shut Down
- Flow Reversal Valve Out of Position
- Oxidation Chamber Low Water Level

NOTE: Chamber #2 alarms are for future expansion of equipment.

NOTE: The last two alarm conditions are identified by red indicator lights, separate from the annunciator.

A contact is also provided to allow system start-up or shutdown from a remote location. Additional contacts are provided for outside alarm relays to be wired by the user.

Once the cause of the alarm is corrected, push the acknowledge button and then the reset button on the control panel. Then turn on the control power to restart the system.

7.2 Electrical

Potential electrical problems which may occur include:

- Main service feeder dead
- Bad disconnect fuse
- Main power circuit breaker in **perox-pure™** panel open
- Shunt trip in **perox-pure™** control cabinet closed
- Loose wires

7.3 Low Water Flow

Low water flow may be caused by supply line plugging or supply pump failure. The supply pump should be checked for proper operation. Reset the flow rate at the pump discharge valve

to maintain the flow above the minimum set point as indicated in Appendix B. Throttling valves downstream of the oxidation chamber is not recommended.

7.4 Peroxide System Failure

Peroxide System Failure is the result of a low H_2O_2 feed line pressure or a low H_2O_2 splitter flow. Low H_2O splitter flow can be a result of several factors.

- Rotometer Valve Closed
- Splitter Pump Failure
- Line Blockage
- Power Failure

Check each of these in the order listed. A flow sensor is located in the splitter pump discharge line. Low flow will initiate a shutdown.

7.5 Lamp End Enclosure Moisture

Leakage of water from the oxidation chamber (seal leakage or quartz tube failure) will cause water to flow to a moisture detection sensor at the bottom of the lamp end enclosure(s) thereby shutting down the system. The source of water leakage must be determined (after the main power is off) and corrected before the system can be restarted. If the moisture in the lamp end chamber is due to seal leakage, drain the reactor and replace the seal. If the leak is caused by a quartz tube failure, proceed as shown in Section 6.9.3, Tube Replacement, for both.

7.6 Lamp End Enclosure Doors

This alarm condition indicates an open door on a lamp end enclosure. If doors appear closed, check for tightness. If doors are tight, switch action may be adjusted by means of a screw at the end of the plunger.

7.7 Overpressure Relief Flow

A rupture disc is provided in an upper manifold of the oxidation chamber, opposite end of discharge from the chamber, to prevent overpressure of the oxidation chamber. This disc is designed to rupture at 20 psig pressure. When this occurs, the flow through the ruptured disc will trip a switch downstream, shutting down the **perox-pure™** Module.

The rupture disc is made of graphite and will fracture into small pieces upon rupture. With the overpressure relief piping removed for disc replacement, inspect the pipe interior and flush with water until the disc pieces are removed. Drain the tee containing the flow sensors and wipe the probes dry before reassembly. Exercise proper safety procedures.

To restart, determine the cause of the overpressure and eliminate. Remove the ruptured disc (it is not repairable) and replace with a spare disc. Spare discs should be kept in the spare parts inventory.

7.8 Lamp Current

Most lamp failures are accompanied by a rise in electrical current in the lamp. If lamp ammeter shows a sudden decrease in current (approximately 25% reduction) that indicates a lamp circuit problem. Daily logging of the reading of each ammeter will usually detect a pattern of deterioration indicating service required on the lamp or drive. The VPSI Service Technician can use this data during the scheduled service visit as preventative maintenance.

7.9 Lamp Drive

Lamp drive failure will be accompanied by an abnormal reading on the lamp ammeter. The most likely reason for no reading on the lamp ammeter is lamp failure (see Item 7.8). Check for this condition first. If the lamp is not faulty, contact VPSI.

7.10 Lamp Drive Enclosure Temperature

The lamp drive enclosure is designed with cooling fans to operate below 140°F. A temperature gauge is provided in the side of the lamp drive enclosure. If this temperature rises above 140°F, check cooling fan operation. If fan is operating, check intake filter and clean or replace. Contact VPSI for replacement filters. If operation does not improve, consult VPSI.

7.11 High Water Temperature in Oxidation Chamber

The oxidation chamber temperature will normally operate in the range of 80 to 150°F depending upon the influent water temperature. If oxidation chamber temperature exceeds 150°F, the complete system will shut down including all lamps. To restart, allow the system to cool to below 140°F and check the influent water temperature to see if it is abnormal. A high temperature shutdown may also be caused by low water flow. Check for pump problems or line restrictions.

7.12 Remote

A contact is provided to allow system start and stop from a remote location. If shutdown is due to signal from this contact, the "remote" light on the alarm panel will be lit. Check the feed system (not by VPSI) or other control for the cause of this shutdown.

7.13 Main Breaker Trip

The lamp drive enclosure is equipped with a plunger type switch, which will trip the main circuit breaker on the **perox-pure™** Module if the enclosure door is opened. Check the door for tight closure and adjust the switch if necessary.

Primary and secondary ground fault detectors are located in the **perox-pure™** Module and the emergency stop switch on the control panel door. Any one of these four (4) circuits will activate the shunt trip to open the main circuit breaker. Identify the cause, make necessary repairs and reset. If the shunt trip is immediately activated upon restarting the **perox-pure™** Module contact a VPSI representatives.

7.14 Flow Reverser Valve Out of Position

Flow reverser systems are operated either pneumatically or electrically. In the event of flow reverser valve failures, the system will shut down.

For pneumatic systems, check the supply air pressure. Insufficient pressure will cause the valves to center. Check air supply lines for crimps or breaks.

For electrical systems, turn the flow reverser control panel know to automatic and visually inspect the valve indicating travel. Debris may collect within the valve seat. Contact a VPSI representative for further repair.

7.15 Oxidation Chamber Low Water Level

In the event that the water level drops within the chamber, the system will shut down after the preset time delay. Check the influent piping for obstructions to the water flow. Open an effluent sample port to allow any air collected within the chamber to escape.

8.0 RECORDS

8.1 General

Keeping good records is important. As a maintenance tool, it allows the operator to monitor progressive changes in performance and to schedule preventive maintenance. Good records also allow for better diagnosis of problems should such occur. Records will be required by regulatory agencies. Careful records can be invaluable.

8.2 Log

Process monitoring requirements are described in Section 6.6.3. Items to be recorded are summarized in the OPERATIONS and ELECTRICAL LOG forms at the end of this section. Keep these forms as a "master," copy before use.

> EACH ITEM SHOULD BE READ AND RECORDED BEFORE AND AFTER ANY FLOW CHANGE OR SHUTDOWN AND START-UP, BUT AT LEAST ONCE A DAY.

8.3 Files

8.3.1 Correspondence

Retain copies of all correspondence pertaining to the treatment system in chronological order.

8.3.2 Regulatory Agency Reports

Maintain a file of copies of all reports received from governmental regulatory agencies pertaining to the treatment systems.

8.3.3 Laboratory Reports

Maintain a chronological file of all reports of influent and effluent conditions received from the testing laboratory. This is especially important if testing is done by an outside laboratory.

8.3.4 Purchasing

Maintain a file on purchase of power, chemicals, and replacement parts. This is desirable as a check on overall system performance and as an aid in calculating required future purchases.

For the Month ____________________   OPERATIONS - perox-pure™   operate.log kts020796

LOCATION:				MODEL:				SERIAL NO.:		
DATE	TIME	HOUR METER	FLOW TOTALIZER	FLOW (GPM)	EFF. PSIG	TEMP. (°F) INF.	EFF.	EFF H_2O_2 (mg/L)	H_2O_2 INVENT. (GALS.)	REMARKS

ORIGINAL MASTER -- COPY BEFORE USE

For the Week _____

ELECTRICAL OPERATIONS LOG - perox-pure™

operate.log kts020795

LOCATION:	MODEL:	SERIAL NO.:	LAMP SIZE:

DATE	TIME	HOUR METER	DRIVE ENCLOSURE TEMP. (°F)	NO. OF LAMPS - AVAILABLE	NO. OF LAMPS - ACTIVE	AMP. DRAW/LAMP POSITION						REMARKS
						1	2	3	4	5	6	
						7	8	9	10	11	12	
						13	14	15	16	17	18	
						19	20	21	22	23	24	
						1	2	3	4	5	6	
						7	8	9	10	11	12	
						13	14	15	16	17	18	
						19	20	21	22	23	24	
						1	2	3	4	5	6	
						7	8	9	10	11	12	
						13	14	15	16	17	18	
						19	20	21	22	23	24	
						1	2	3	4	5	6	
						7	8	9	10	11	12	
						13	14	15	16	17	18	
						19	20	21	22	23	24	
						1	2	3	4	5	6	
						7	8	9	10	11	12	
						13	14	15	16	17	18	
						19	20	21	22	23	24	
						1	2	3	4	5	6	
						7	8	9	10	11	12	
						13	14	15	16	17	18	
						19	20	21	22	23	24	
						1	2	3	4	5	6	
						7	8	9	10	11	12	
						13	14	15	16	17	18	
						19	20	21	22	23	24	

ORIGINAL MASTER -- COPY BEFORE USE

A. SERIAL NUMBERS

Project: Brunswick Naval Air Station

Location: Brunswick, Maine

Equipment:

Description	Model No.	Serial No.	Delivery Date
perox-pure™ Module	LSBD-90/180RA	251	02/21/95

B. SYSTEM SPECIFICATIONS

perox-pure™ Module

Model No.	LSBD-90/180RA
Flow Rate:	130 gpm
Power Requirements:	90 kW
(3/60/480V):	100 kVa

Note:

1. Present requirements are 90 kW.
2. Upgrade requirements are 180 kW, 200 kVa.

Treatment Criteria

Sites 1 & 3
Organic Contaminants & Treatment Objective

	Concentration (μg/l)	
Contaminant	Max. Detected Value	Treatment Objective (Max. Value)
Vinyl Chloride	180	2
1,2-Dichloroethylene (cis)	140	70
1,2-Dichloroethylene (trans)	140	100

Other VOCs include Benzene, Toluene, Ethylbenzene, m,p-Xylene and o-Xylene, all below MCL. This groundwater will be pretreated for metals removal with potassium permanganate, caustic soda, clarification and greensand filtration.

Eastern Plume Site
Organic Contaminants & Treatment Objective

	Concentration (μg/l)	
Contaminant	Max. Detected Value	Treatment Objective (Max. Value)
1,1-Dichloroethylene (DCE)	110	7
cis-1,2-DCE	680	70
trans-1,2-DCE11	Included above	100
1,1,1-Trichloroethane	2,300	700
Tetrachloroethylene	42	5
Trichloroethylene	1,200	5

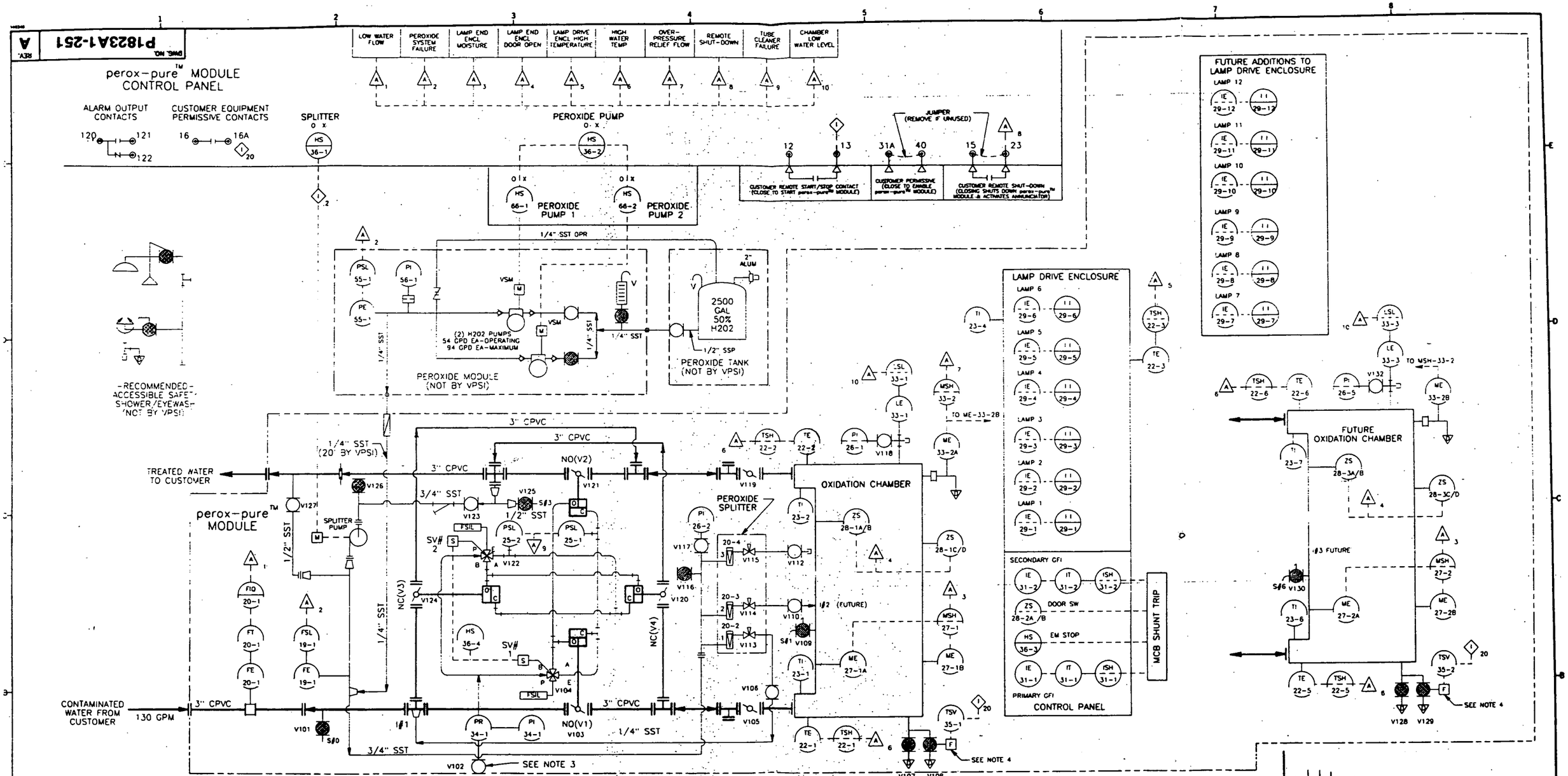

MECHANICAL SYMBOLS

- Y STRAINER
- PLUG
- 150# FLANGE JOINT
- OVERPRESSURE RELIEF (RUPTURE DISC)
- BALL VALVE
- CHEMICAL INJECTOR
- TOGGLE VALVE
- SOLENOID
- LOCAL MOUNTED
- PANEL MOUNTED
- BACK PANEL MOUNTED
- ORIFICE PLATE
- ROTOMETER
- 4-WAY VALVE
- CALIBRATION CYLINDER
- ALARM INTERLOCK
- PUMP
- UNION
- REDUCER
- FREEZE RELEASE VALVE
- PIPE TO DRAIN
- BALL CHECK
- ELECTRIC MOTOR
- NORMALLY OPEN PATH
- NORMALLY CLOSED PATH
- FILTER/SILENCER
- DIAPHRAGM VALVE
- FLOW CONTROL
- FLOW OF CONTROL IN perox-pure™ CONTROL PANEL
- PNEUMATIC VALVE OPERATOR AIR-TO-OPEN AIR-TO-CLOSE
- BUTTERFLY VALVE
- INTERLOCK
- FLUSH TEE W/CAP
- NEEDLE VALVE
- SPRING CHECK VALVE
- QUICK-DISCONNECT HOSE FITTING
- METERING PUMP
- TERMINAL IN perox-pure™ CONTROL PANEL
- SNUBBER

INSTRUMENT LEGEND AND ABBREVIATIONS

ALUM	ALUMINUM
CPVC	CHLORINATED POLYVINYL CHLORIDE
FE	FLOW ELEMENT
FIQ	FLOW INDICATING TOTALIZER
FSL	FLOW SWITCH (LOW)
FT	FLOW TRANSMITTER
HS	HAND SWITCH
I	INJECTION POINT
IE	CURRENT SENSOR
II	CURRENT INDICATOR
ISH	CURRENT SWITCH (HIGH)
IS	CURRENT SWITCH
IT	CURRENT TRANSMITTER
LE	LEVEL SENSOR
LSL	LEVEL SWITCH (LOW)
ME	MOISTURE SENSOR
MS	MOISTURE SWITCH
MSH	MOISTURE SWITCH (HIGH)
NC	NORMALLY CLOSED
NO	NORMALLY OPEN
OPR	OVER PRESSURE RELIEF
OX	ON/OFF
PE	PRESSURE ELEMENT
PI	PRESSURE INDICATOR
PRV	PRESSURE REGULATOR
PSL	PRESSURE SWITCH (LOW)
S	SAMPLE
SSP	STAINLESS STEEL PIPE (316)
SST	STAINLESS STEEL TUBING (316)
SV	SOLENOID VALVE
TE	TEMPERATURE SENSOR
TI	TEMPERATURE INDICATOR
TSH	TEMPERATURE SWITCH (HIGH)
TSV	FREEZE RELEASE VALVE
V	VENT
VSM	VARIABLE STROKE MANUAL
ZS	LIMIT SWITCH
V#	VALVE NUMBER

NOTES:

1. ——— DENOTES BATTERY LIMITS. ALL ITEMS WITHIN ——— WILL BE FURNISHED BY VPSI.
2. 20 PSIG MAX TO perox-pure™ UNIT.
3. 80-120 PSIG CLEAN AND DRY AIR REQ'D. COMPRESSED AIR SUPPLIED BY CUSTOMER.
4. FREEZE RELEASE VALVE TSV-35-1 IS HEAT TRACED. HEAT TRACING IS ENERGIZED WHEN MACHINE IS RUNNING. THIS WILL PREVENT CHAMBER DRAINAGE DURING COLD WEATHER.

REV.	DATE	DR.	CHK.	APPR.	DESCRIPTION
A	10/31/96	SSP	SW	MAG	RELOCATED OHO, SH3. DELETED TI 23-3 @ OHO

Peroxidation Systems Inc.
WATER TREATMENT THROUGH INNOVATIVE TECHNOLOGY

PROJECT: BRUNSWICK SN 251A

DR. SSP
CHK. SW
APPR. MAG
DATE 10/31/96
SCALE NONE

PIPING AND INSTRUMENTATION DIAGRAM

DRAWING NUMBER P1823A1-251

REV. A

DWG. NO. P1823S0-251 REV. A

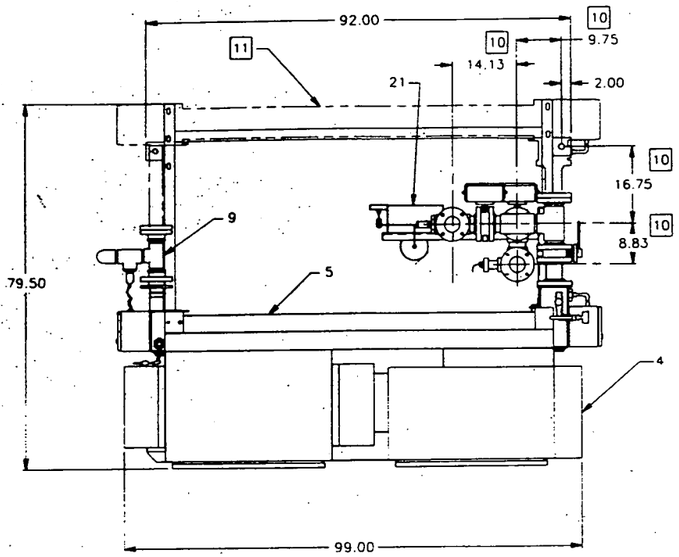

PLAN

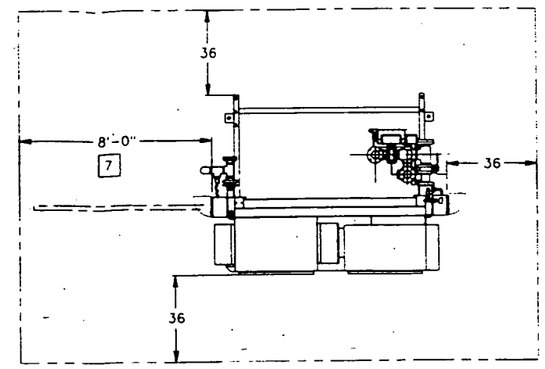

SPACE REQUIREMENTS

NOTES:

1. ALTERNATE INLET & OUTLET ARRANGEMENTS AVAILABLE. CONSULT PEROXIDATION SYSTEMS, INC.
2. OPERATING PRESSURE: 15 PSIG MAX
3. POWER SUPPLY: 3/60/480V, 90KW (180KW FUTURE)
4. OPERATING WEIGHT: 3000 LBS
   SHIPPING WEIGHT: 3400 LBS
5. ELECTRICAL ENCLOSURES ARE WEATHERPROOF
6. (4) ANCHOR BOLTS REQUIRED, 5/8 DIA X 2 IN MIN PROJECTION. NOT BY PSI.
7. CLEAR SPACE REQUIRED FOR LAMP REMOVAL REQUIRED AT ONE END ONLY.
8. TUBE CLEANING CYCLE IS CONTROLLED BY CONTROL PANEL TIMER. FACTORY SETTING IS TWO CYCLES PER DAY. ADJUST AS NEEDED FOR PROPER CLEANING.
9. COMPRESSED AIR REQUIRED: 4 ACFM, 80-120 PSIG. (DURING CLEANING CYCLE ONLY)
10. PIPING CONNECTION LOCATIONS MAY VARY FROM LOCATIONS SHOWN .5 INCH IN ANY DIRECTION.
11. FUTURE OXIDATION CHAMBER.

1. SKID
2. CONTROL ENCLOSURE
3. LAMP DRIVE ENCLOSURE
4. POWER DISTRIBUTION PANEL
5. OXIDATION CHAMBER
6. LAMP END ENCLOSURE
7. INLET (3"-150#)
8. OUTLET (3"-150#)
9. OVERPRESSURE RELIEF OUTLET (2"-150#)
10. TUBE CLEANER PIPING
11. FLOW SENSOR
12. PEROXIDE INJECTION CONNECTION (1/4" TUBE UNION)
13. EMERGENCY STOP BUTTON
14. ALARM PANEL
15. AIR INTAKE HOOD
16. AIR EXHAUST
17. 3/4" NFPT DRAIN
18. 1/2" NMPT COMPRESSED AIR
19. 1/2" NFPT INLET SAMPLE
20. 1/2" NFPT OUTLET SAMPLE
21. SPLITTER PANEL

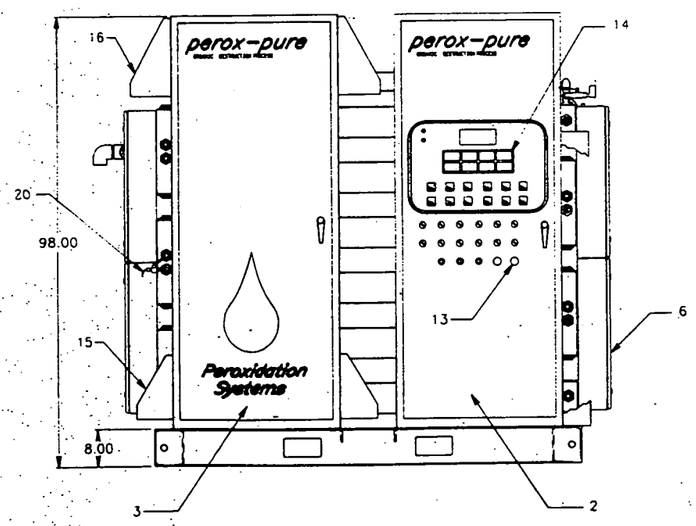

ELEVATION

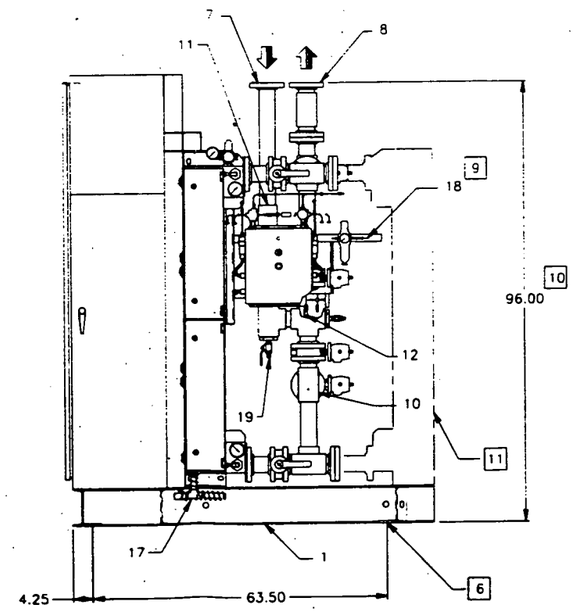

SIDE VIEW

Project Title and Location:	Brunswick Pond Water Reclamation Brunswick, ME
Construction Contract Number:	[illegible]
Specification:	Series [illegible]
Submittal Description Number:	SD-04
Vendor: Name / Address / Telephone Number:	Peroxidation Systems Inc. 2632 E. Broadway, #600, Tucson, AZ 85711 (800) 793-2352
Location within project:	Site 1,2,3,4,5 and Storm Plant

A REVISED PIPING 96.00 HAS 90, TUBE CLEANER PIPING

THIS INFORMATION, INCLUDING REFERENCE TO HIGH TECHNICAL SKILL EXPERTISE OF PEROXIDATION SYSTEMS, INC. WHO HAS PROVIDED IT IS RELIABLE AND IS CURRENTLY CONSTRUCTED AND ALL REASONABLE EFFORTS BY REPRESENTATIVES OF PEROXIDATION SYSTEMS, INC. TO ASSURE ADHERENCE TO SAME HAS BEEN MADE. PEROXIDATION SYSTEMS, INC. MAKES NO WARRANTIES OR GUARANTEES OF ANY KIND AS TO THE SUFFICIENCY OF THEIR ACT OF PUBLICATION OR ANY ENHANCEMENTS OF ANY KIND ALL RIGHTS RESERVED. PEROXIDATION SYSTEMS, INC. ASSUMES NO LIABILITY FOR ANY DAMAGES RESULTING FROM ANY APPLICATION OF OTHER INFORMATION NOT AS IS CURRENTLY AUTHORIZED IN WRITING BY PEROXIDATION SYSTEMS, INC.

Peroxidation Systems Inc.
WATER TREATMENT THROUGH INNOVATIVE TECHNOLOGY

PROJECT:	BRUNSWICK — SN 251A
DR.	SSP
CHK.	MAG
APPR.	MAG
DATE	11/1/94
SCALE	1:16
RC	

MODEL LSBD-90/180RPA ARRANGEMENT

DRAWING NUMBER: P1823S0-251

REV. A

DWG. NO. P182070-251 REV.

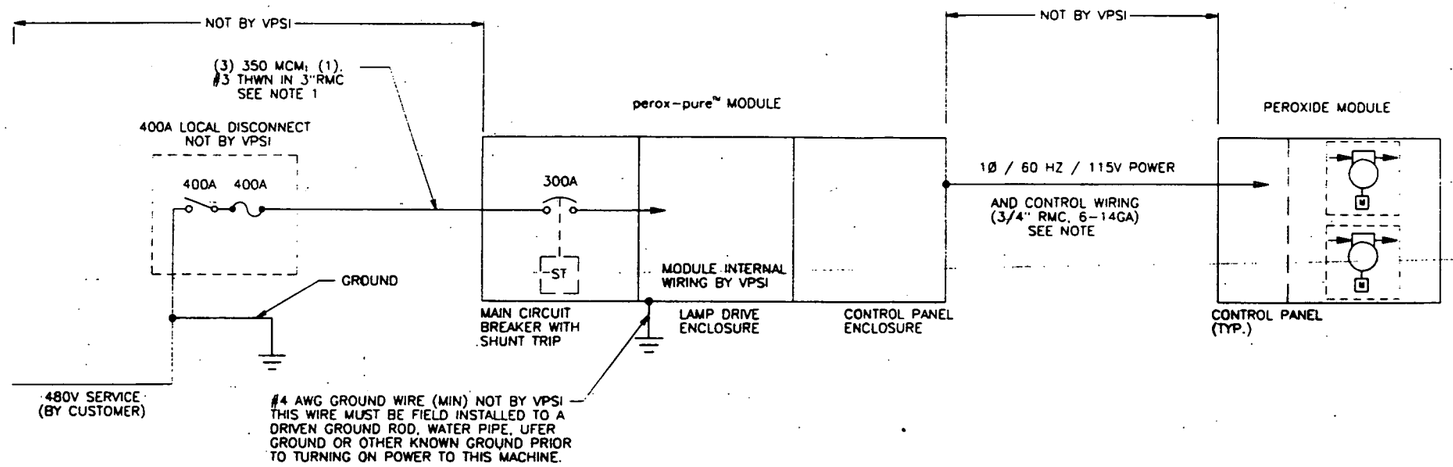

NOTE:

1. INTERCONNECTING CONDUIT, WIRE & INSTALLATION NOT BY VPSI.
2. INTERNAL WIRING OF THE perox-pure™ MODULE IS SUCH THAT IF ANY ACCESS PANEL, OTHER THAN THE CONTROL PANEL DOOR, IS OPENED, THE MACHINE WILL BE STOPPED AND THE APPROPRIATE ANNUNCIATOR WINDOW ILLUMINATED. THE ACCESS PANEL MUST BE CLOSED AND ANNUNCIATOR ACKNOWLEDGED AND RESET BEFORE THE MACHINE CAN BE RE-STARTED.

   IF THE LAMP DRIVE ENCLOSURE IS OPENED, THE MAIN SHUNT-TRIP CIRCUIT BREAKER IS TRIPPED, TURNING OFF ALL POWER TO THE INTERIOR OF THE MACHINE. THE LAMP DRIVE ENCLOSURE DOOR MUST BE CLOSED AND THE MAIN CIRCUIT BREAKER RESET BEFORE THE MACHINE CAN BE RE-STARTED.

   90 KW LOAD CALCULATION
   FULL POWER=90KW
   90 KW @ .90 POWER FACTOR = 100 KVA
   100 KVA @ 480 VOLTS, 3 PHASE BALANCED = 120 AMPERES
   120 AMPERES x 250% = 300 AMPERES

   180 KW LOAD CALCULATION
   FULL POWER=180KW
   180 KW @ .90 POWER FACTOR = 200 KVA
   200 KVA @ 480 VOLTS, 3 PHASE BALANCED = 240 AMPERES
   240 AMPERES x 125% = 300 AMPERES

Project Title and Location	Brunswick Pond Station Dechlorination Brunswick, ME
Construction Contract Number	[illegible]
Specification	Section [illegible]
Submittal Description Number	[illegible]
Vendor: Name / Address / Telephone Number	Water Peroxidation Systems Inc. 5131 S. Broadway, [illegible], Tucson, AZ 85711 (602) 792-[illegible]
Location within project	Site L.S.S.S.P and Station Plans

THE INFORMATION TRANSMITTED HEREWITH IS NOT PUBLIC, BUT BELONGS TO PEROXIDATION SYSTEMS, INC. WHO HAS PROPRIETARY RIGHTS. IT SHALL NOT BE REPRODUCED, DISTRIBUTED, PUBLISHED OR DISPLAYED WITHOUT PRIOR WRITTEN CONSENT. THOSE WHO RECEIVE THIS INFORMATION SHALL BE DEEMED BY THEIR ACT OF RECEIVING SUCH INFO TO HAVE AGREED TO SUCH RESTRICTIONS. ANY REPRODUCTION OR OTHER DISCLOSURE OR USE WHATSOEVER OF ANY OR ALL SUCH INFO WITHOUT EXPRESS PRIOR WRITTEN CONSENT OF PEROXIDATION SYSTEMS, INC.

REV. NO.	BY	CHK	APPR.	DATE

Peroxidation Systems Inc
WATER TREATMENT THROUGH INNOVATIVE TECHNOLOGY

PROJECT: BRUNSWICK N.S. SN 251A

DR. AVS
CHK. RL
APPR. RCP
DATE 10.27.94
SCALE NONE
QC BLK

180KW
ELECTRICAL SERVICE DIAGRAM

DRAWING NUMBER P182070-251

REV.

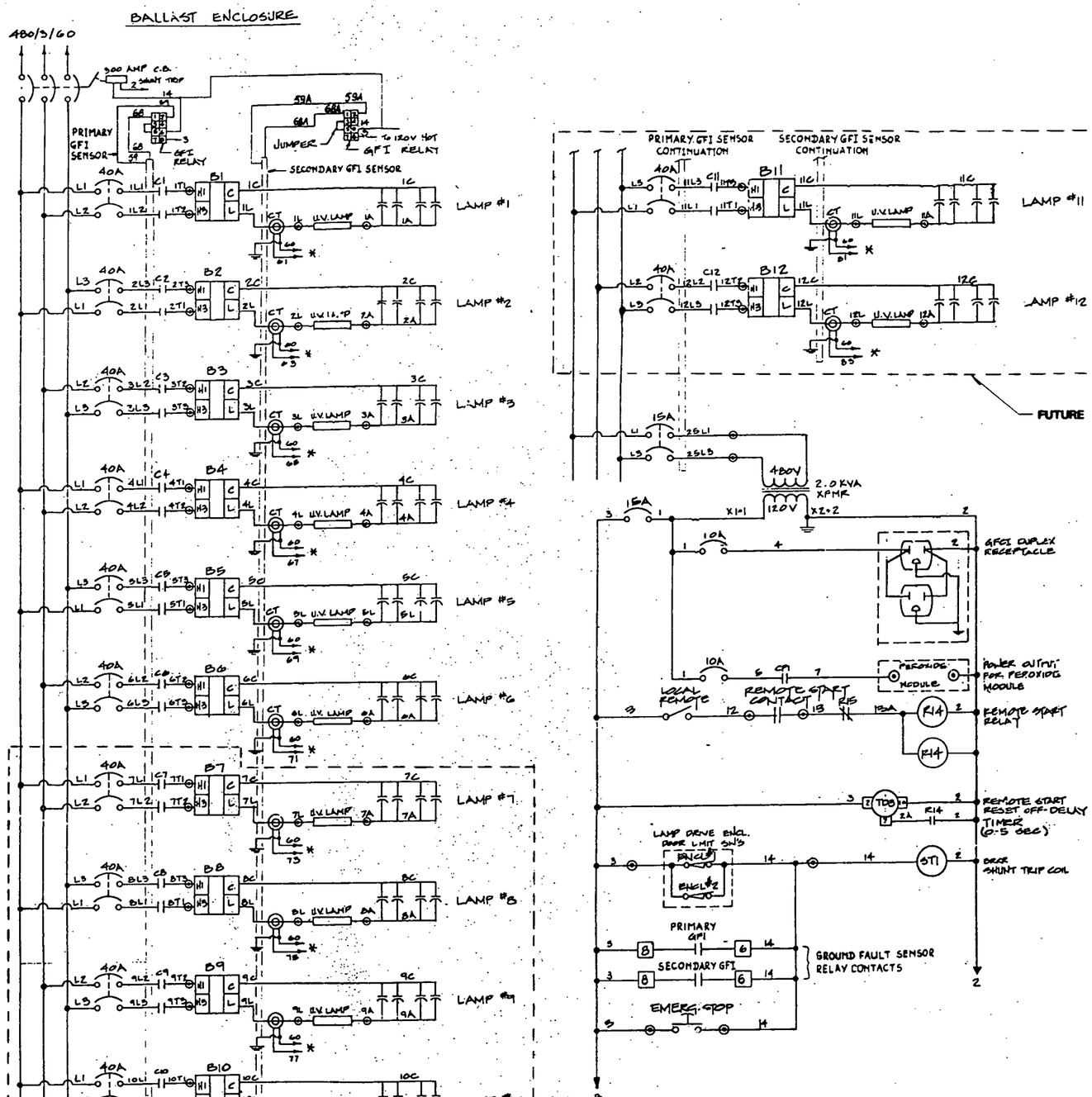

REV. NO.	BY	CHK	APPR.	DATE	REVISED PER SCR 268
B					REVISED PER SCR 268
A					ADDED PRIMARY GFI & IDENTIFIED PRIMARY & SECONDARY GFI CONTACTS

THE INFORMATION, PROGRAMMING MEDIUMS, OR ART WORK, NOT RELATED TO PEROXIDATION SYSTEMS, INC. IS PROPRIETARY AND CONFIDENTIAL IN NATURE. FOR AN EXPRESSLY RESTRICTED USE. ALL RECEIVING PARTIES OR ANY ORGANIZATIONS THAT RECEIVE SUCH INFORMATION SHALL BE ALL RIGHTS OF THEIR ACT OF DISCLOSING SUCH INFORMATION WITHOUT WRITTEN PERMISSION OF PEROXIDATION SYSTEMS, INC.

Peroxidation Systems, Inc.

POLLUTION ABATEMENT SERVICES AND EQUIPMENT

PROJECT:	BRUNSWICK N.S. 251A
DR. GL/AS	WIRING DIAGRAM
CHK. RL/SW	
APPR. MBF	
DATE 11-4-94	DRAWING NUMBER SHT 1 OF 4
SCALE NONE	P182330-251
QA	REV. B

Project Title and Location:	Brunswick Naval Station Demilitarization Brunswick, ME
Construction Contract Number:	N62472-94-C-0884/0003-0
Specification:	Section 13245
Submittal Description Number:	[illegible]
Vendor - Phone Address Telephone Number:	Peroxidation Systems Inc. 3131 E. Broadway, #600, Tucson, AZ 85711 (602) 318-0383
Location within project:	Sites 1, 1.1, 1.4.1 and Beacon Pines

DWG. NO. P182330-251 SHT 1 OF 4 REV. B

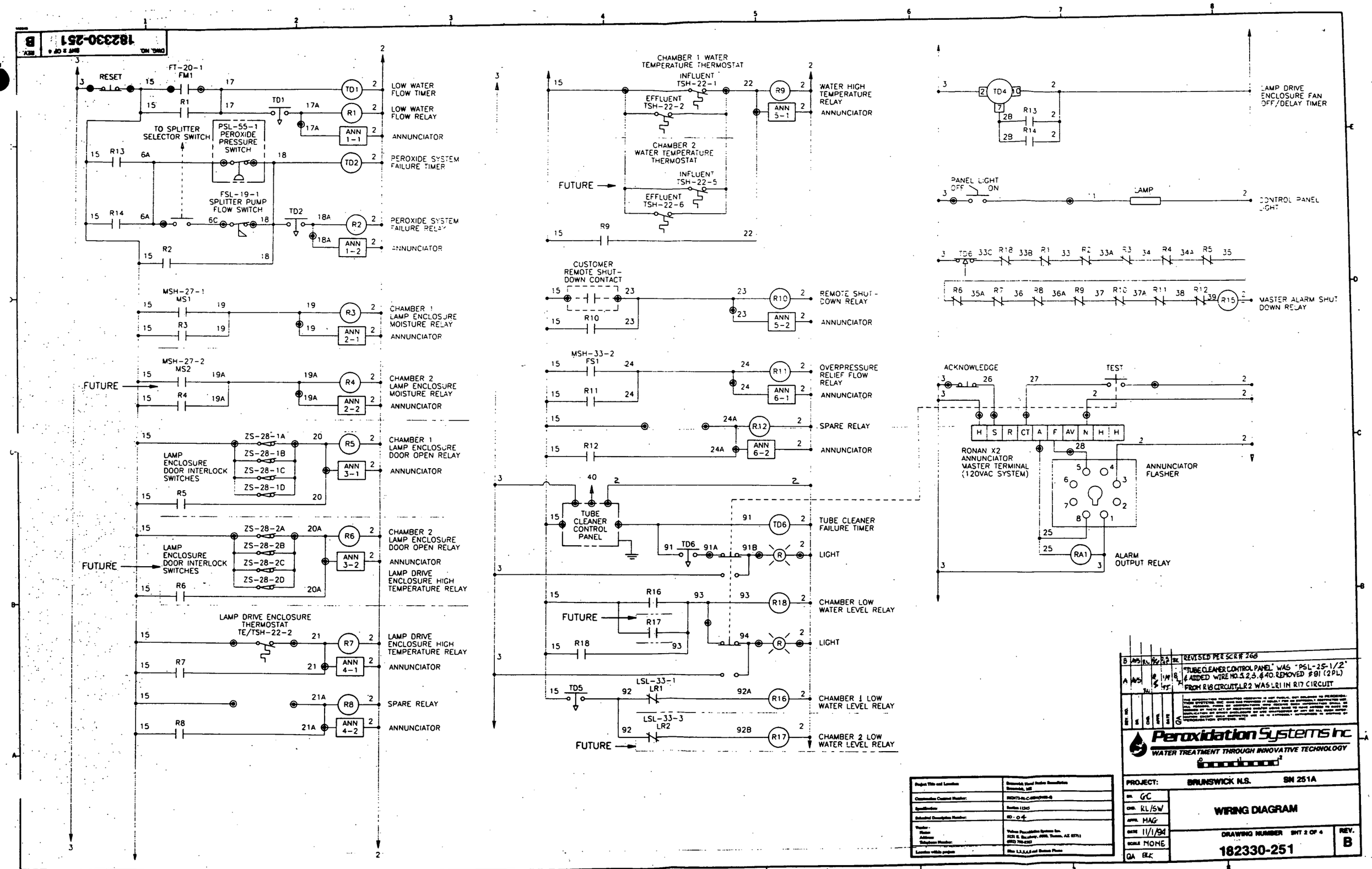
RESET
FT-20-1
FM1
TD1
LOW WATER FLOW TIMER
R1
LOW WATER FLOW RELAY
ANN 1-1
ANNUNCIATOR
TO SPLITTER SELECTOR SWITCH
PSL-55-1 PEROXIDE PRESSURE SWITCH
TD2
PEROXIDE SYSTEM FAILURE TIMER
FSL-19-1 SPLITTER PUMP FLOW SWITCH
R2
PEROXIDE SYSTEM FAILURE RELAY
ANN 1-2
ANNUNCIATOR
MSH-27-1
MS1
R3
CHAMBER 1 LAMP ENCLOSURE MOISTURE RELAY
ANN 2-1
ANNUNCIATOR
FUTURE
MSH-27-2
MS2
R4
CHAMBER 2 LAMP ENCLOSURE MOISTURE RELAY
ANN 2-2
ANNUNCIATOR
ZS-28-1A
ZS-28-1B
ZS-28-1C
ZS-28-1D
LAMP ENCLOSURE DOOR INTERLOCK SWITCHES
R5
CHAMBER 1 LAMP ENCLOSURE DOOR OPEN RELAY
ANN 3-1
ANNUNCIATOR
ZS-28-2A
ZS-28-2B
ZS-28-2C
ZS-28-2D
LAMP ENCLOSURE DOOR INTERLOCK SWITCHES
R6
CHAMBER 2 LAMP ENCLOSURE DOOR OPEN RELAY
ANN 3-2
ANNUNCIATOR
LAMP DRIVE ENCLOSURE HIGH TEMPERATURE RELAY
LAMP DRIVE ENCLOSURE THERMOSTAT TE/TSH-22-2
R7
LAMP DRIVE ENCLOSURE HIGH TEMPERATURE RELAY
ANN 4-1
ANNUNCIATOR
R8
SPARE RELAY
ANN 4-2
ANNUNCIATOR
CHAMBER 1 WATER TEMPERATURE THERMOSTAT
INFLUENT TSH-22-1
EFFLUENT TSH-22-2
R9
WATER HIGH TEMPERATURE RELAY
ANN 5-1
ANNUNCIATOR
CHAMBER 2 WATER TEMPERATURE THERMOSTAT
INFLUENT TSH-22-5
EFFLUENT TSH-22-6
FUTURE
CUSTOMER REMOTE SHUT-DOWN CONTACT
R10
REMOTE SHUT-DOWN RELAY
ANN 5-2
ANNUNCIATOR
MSH-33-2
FS1
R11
OVERPRESSURE RELIEF FLOW RELAY
ANN 6-1
ANNUNCIATOR
R12
SPARE RELAY
ANN 6-2
ANNUNCIATOR
TUBE CLEANER CONTROL PANEL
TD6
TUBE CLEANER FAILURE TIMER
LIGHT
R16
R17
R18
CHAMBER LOW WATER LEVEL RELAY
LIGHT
TD5
LSL-33-1
LR1
CHAMBER 1 LOW WATER LEVEL RELAY
LSL-33-3
LR2
CHAMBER 2 LOW WATER LEVEL RELAY
TD4
LAMP DRIVE ENCLOSURE FAN OFF/DELAY TIMER
PANEL LIGHT
OFF
ON
LAMP
CONTROL PANEL LIGHT
R15
MASTER ALARM SHUT DOWN RELAY
ACKNOWLEDGE
TEST
RONAN X2 ANNUNCIATOR MASTER TERMINAL (120VAC SYSTEM)
ANNUNCIATOR FLASHER
RA1
ALARM OUTPUT RELAY
Peroxidation Systems Inc.
WATER TREATMENT THROUGH INNOVATIVE TECHNOLOGY
REVISED PER SCR # 268
"TUBE CLEANER CONTROL PANEL" WAS "PSL-25-1/2" & ADDED WIRE NO.S 2,3,4&40. REMOVED #81 (2PL) FROM R18 CIRCUIT, LR2 WAS LR1 IN R17 CIRCUIT
PROJECT: BRUNSWICK N.S. SN 251A
WIRING DIAGRAM
DRAWING NUMBER SHT 2 OF 4
182330-251
REV. B
DATE 11/1/94
SCALE NONE
182330-251
B

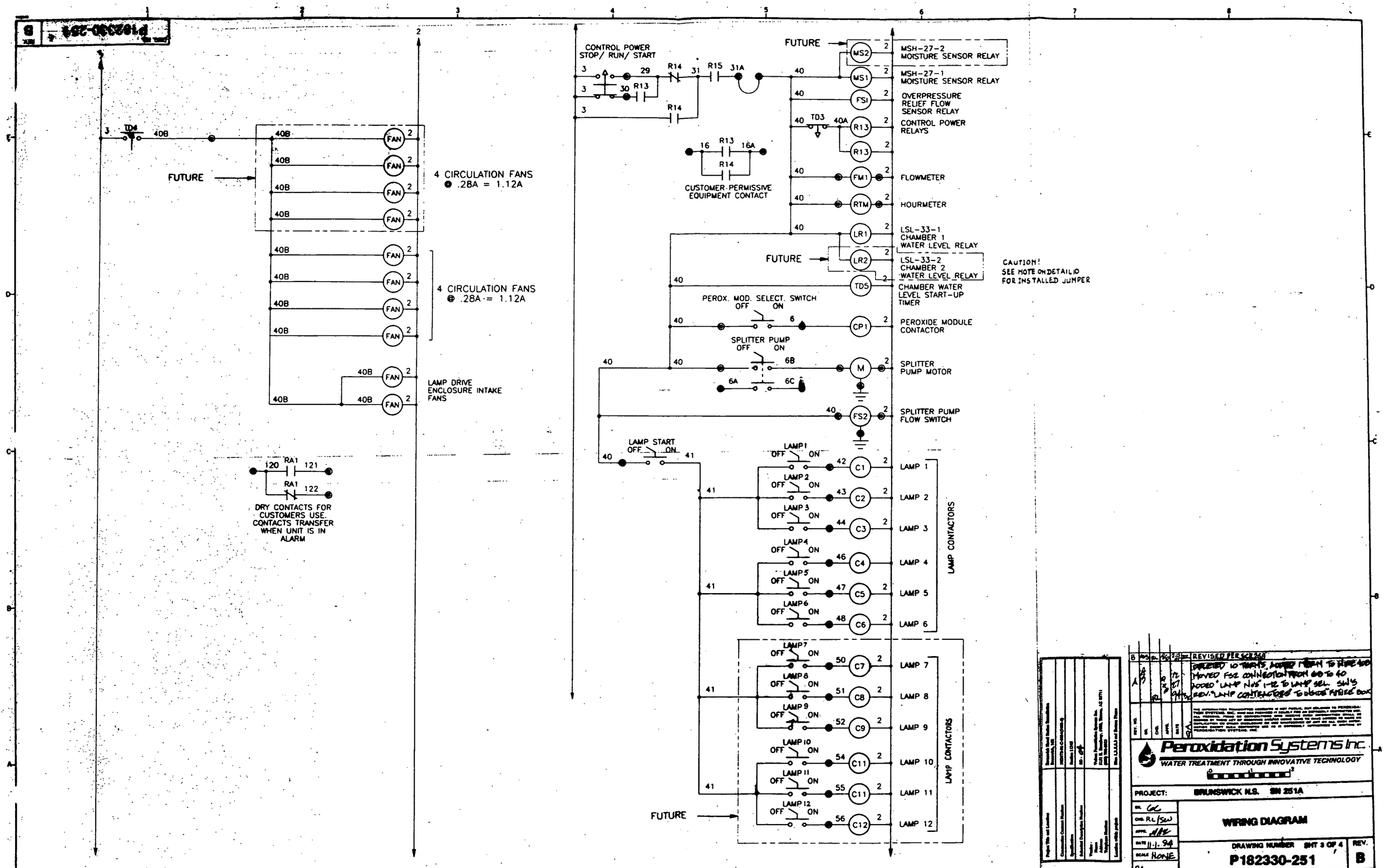
CONTROL POWER STOP/ RUN/ START
FUTURE
MSH-27-2 MOISTURE SENSOR RELAY
MSH-27-1 MOISTURE SENSOR RELAY
OVERPRESSURE RELIEF FLOW SENSOR RELAY
CONTROL POWER RELAYS
CUSTOMER PERMISSIVE EQUIPMENT CONTACT
FLOWMETER
HOURMETER
LSL-33-1 CHAMBER 1 WATER LEVEL RELAY
LSL-33-2 CHAMBER 2 WATER LEVEL RELAY
CAUTION! SEE NOTE ON DETAIL 10 FOR INSTALLED JUMPER
CHAMBER WATER LEVEL START-UP TIMER
PEROX. MOD. SELECT. SWITCH OFF ON
PEROXIDE MODULE CONTACTOR
SPLITTER PUMP OFF ON
SPLITTER PUMP MOTOR
SPLITTER PUMP FLOW SWITCH
LAMP START OFF ON
LAMP 1 OFF ON
LAMP 2 OFF ON
LAMP 3 OFF ON
LAMP 4 OFF ON
LAMP 5 OFF ON
LAMP 6 OFF ON
LAMP 7 OFF ON
LAMP 8 OFF ON
LAMP 9 OFF ON
LAMP 10 OFF ON
LAMP 11 OFF ON
LAMP 12 OFF ON
LAMP CONTACTORS
4 CIRCULATION FANS @ .28A = 1.12A
4 CIRCULATION FANS @ .28A = 1.12A
LAMP DRIVE ENCLOSURE INTAKE FANS
DRY CONTACTS FOR CUSTOMERS USE. CONTACTS TRANSFER WHEN UNIT IS IN ALARM
REVISED PER SCR 260
Peroxidation Systems Inc.
WATER TREATMENT THROUGH INNOVATIVE TECHNOLOGY
PROJECT: BRUNSWICK N.S. SN 251A
WIRING DIAGRAM
DRAWING NUMBER SHT 2 OF 4
P182330-251
REV. B
SCALE NONE
11-1-94

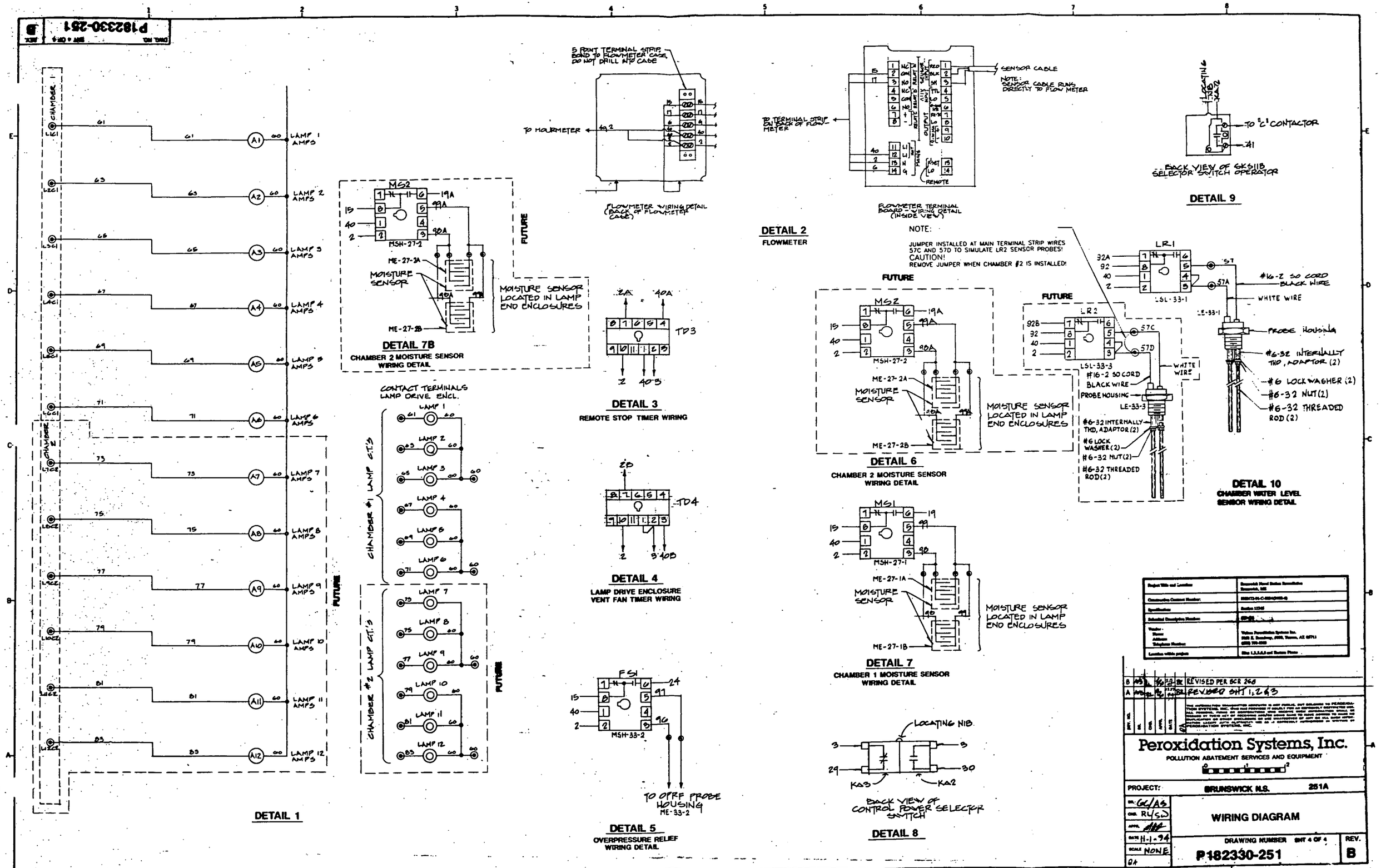

P182330-251
DETAIL 1
CHAMBER 1
CHAMBER 2
LAMP 1 AMPS
LAMP 2 AMPS
LAMP 3 AMPS
LAMP 4 AMPS
LAMP 5 AMPS
LAMP 6 AMPS
LAMP 7 AMPS
LAMP 8 AMPS
LAMP 9 AMPS
LAMP 10 AMPS
LAMP 11 AMPS
LAMP 12 AMPS
FUTURE
DETAIL 7B
CHAMBER 2 MOISTURE SENSOR WIRING DETAIL
MS2
MSH-27-2
ME-27-2A
ME-27-2B
MOISTURE SENSOR
MOISTURE SENSOR LOCATED IN LAMP END ENCLOSURES
CONTACT TERMINALS LAMP DRIVE ENCL.
CHAMBER #1 LAMP C.T.'S
CHAMBER #2 LAMP C.T.'S
DETAIL 3
REMOTE STOP TIMER WIRING
TD3
DETAIL 4
LAMP DRIVE ENCLOSURE VENT FAN TIMER WIRING
TD4
DETAIL 5
OVERPRESSURE RELIEF WIRING DETAIL
FS1
MSH-33-2
TO OPRF PROBE HOUSING ME-33-2
5 POINT TERMINAL STRIP BOND TO FLOWMETER CASE, DO NOT DRILL INTO CASE
TO HOURMETER
FLOWMETER WIRING DETAIL (BACK OF FLOWMETER CASE)
DETAIL 2
FLOWMETER
TO TERMINAL STRIP ON BACK OF FLOWMETER
SENSOR CABLE
NOTE: SENSOR CABLE RUNS DIRECTLY TO FLOW METER
FLOWMETER TERMINAL BOARD - WIRING DETAIL (INSIDE VIEW)
REMOTE
NOTE:
JUMPER INSTALLED AT MAIN TERMINAL STRIP WIRES 57C AND 57D TO SIMULATE LR2 SENSOR PROBES!
CAUTION!
REMOVE JUMPER WHEN CHAMBER #2 IS INSTALLED!
DETAIL 6
CHAMBER 2 MOISTURE SENSOR WIRING DETAIL
MS1
MSH-27-1
ME-27-1A
ME-27-1B
DETAIL 7
CHAMBER 1 MOISTURE SENSOR WIRING DETAIL
LOCATING NIB
KA3
KA2
BACK VIEW OF CONTROL POWER SELECTOR SWITCH
DETAIL 8
LR1
LSL-33-1
LR2
LSL-33-3
#16-2 SO CORD BLACK WIRE
WHITE WIRE
PROBE HOUSING
LE-33-3
#6-32 INTERNALLY THD, ADAPTOR (2)
#6 LOCK WASHER (2)
#6-32 NUT (2)
#6-32 THREADED ROD (2)
DETAIL 9
TO "C" CONTACTOR
BACK VIEW OF SKS11B SELECTOR SWITCH OPERATOR
DETAIL 10
CHAMBER WATER LEVEL SENSOR WIRING DETAIL
REVISED PER SCR 268
REVISED SHT 1,2 & 3
Peroxidation Systems, Inc.
POLLUTION ABATEMENT SERVICES AND EQUIPMENT
PROJECT: BRUNSWICK N.S. 251A
WIRING DIAGRAM
DRAWING NUMBER SHT 4 OF 4
P182330-251
REV. B
SCALE NONE

DWG. NO. P182340-251 REV. A

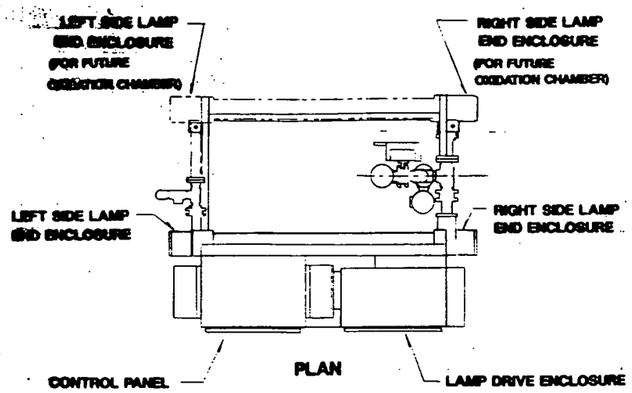

PLAN

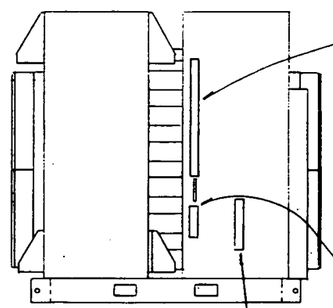

ELEVATION

SER. NO. 251A
FIELD WIRING
TERMINAL STRIP

TO PEROXIDE MODULE TERMINAL 2	2	TO TERMINAL 2 ABOVE
TO PEROXIDE MODULE TERMINAL 1	7	TO CP1
TO PEROXIDE MODULE TERMINAL GND	GND	TO GROUND BUS
TO PEROXIDE MODULE TERMINAL 5	6A	TO SPLITTER SEL. SW., R13 & R14
TO PEROXIDE MODULE TERMINAL 6	16	TO SPLITTER FLOW SW., TD2 & R2
TO CUSTOMER'S "REMOTE START" CONTACT	12	TO TERMINAL 12 ABOVE
TO CUSTOMER'S "REMOTE START" CONTACT	13	TO R15
TO CUSTOMER'S "REMOTE SHUT-DOWN" CONTACT	15	TO TERMINAL 15 ABOVE & BELOW
TO CUSTOMER'S "REMOTE SHUT-DOWN" CONTACT	23	TO TERMINAL 23 ABOVE
RUN PERMISSIVE TO CUSTOMER'S EQUIPMENT	16	TO R13 & R14
RUN PERMISSIVE TO CUSTOMER'S EQUIPMENT	16A	TO R13 & R14
RO RESET SWITCH	16	TO TERMINAL 16 ABOVE & BELOW
ANNUNCIATOR INPUT (SPARE)	21A	TO TERMINAL 21A ABOVE
ANNUNCIATOR INPUT (SPARE)	15	TO TERMINAL 15 ABOVE
ANNUNCIATOR INPUT (SPARE)	24A	TO TERMINAL 24A ABOVE
RUN PERMISSIVE FROM CUSTOMER	31A *	TO R15
RUN PERMISSIVE FROM CUSTOMER	40 *	TO TERMINAL 40 ABOVE
ALARM OUTPUT COMMON	120	TO RA1 COMMON
ALARM OUTPUT NORMALLY OPEN	121	TO RA1 NORMALLY OPEN
ALARM OUTPUT NORMALLY CLOSED	122	TO RA1 NORMALLY CLOSED

* FACTORY INSTALLED JUMPER BETWEEN 31A & 40.
REMOVE TO ALLOW CUSTOMER CONTROL.

3S7

SER. NO. 251A
MAIN
TERMINAL STRIP

	2	TO 3 KVA TRANSFORMER NEUTRAL & GROUND BUS
	2	TO LAMP CONTACTORS C1-C8 (BC7-C12 FUTURE) & CP1
	2	TO UTILITY OUTLET
TO PANEL LIGHT	2	TO R1-R18, TD1-TD8, UR1, UR2, MS1, MS2, FS1
TO SHUNT TRIP COIL	2	TO ANNUNCIATOR FLASHER
TO LAMP DRIVE ENCLOSURE VENT & CIRCULATION FANS	2	TO TERMINAL 2 BELOW
TO TEST PUSHBUTTON	2	
TO LOCAL-REMOTE TOGGLE SWITCH	3	TO 15 AMP CONTROL POWER CIRCUIT BREAKER
TO LAMP DRIVE ENCLOSURE DOOR SWITCHES	3	TO TERMINAL 6, PRIMARY & SECONDARY GFI RELAYS
TO EMER STOP, TEST, RESET, CONTROL POWER, PANEL LIGHT & ACK SWITCHES	3	TO TD3, TD4, TD5, SA1, R1-R6 AND FLASHER
	3	TO TERMINAL 3 BELOW
TO PEROXIDE MODULE SELECTOR SWITCH	6	TO CP1
TO SPLITTER PUMP SELECTOR SWITCH	6B	TO SPLITTER PUMP MOTOR
TO SPLITTER PUMP SELECTOR SWITCH	6C	TO SPLITTER PUMP FLOW SWITCH FS2
TO PANEL LIGHT SELECTOR SWITCH	11	TO PANEL LIGHT
TO LOCAL-REMOTE TOGGLE SWITCH	12	TO FIELD WIRING TERMINAL STRIP, TERMINAL 12
TO SHUNT TRIP COIL	14	TO PRIMARY & SECONDARY GFI RELAYS
TO LAMP DRIVE ENCL. DOOR SW.'S & EMER STOP PB	14	
TO RESET PUSHBUTTON & LAMP DRIVE ENCLOSURE THERMOSTAT	15	TO R1-R14, R16-R18, TD6, MS1, MS2, & FS1
TO FLOWMETER FT-3D-1	15	TO TERMINAL 15 BELOW
TO FLOWMETER FT-3D-1	17	TO R1 & TD1
TO LAMP DRIVE ENCLOSURE THERMOSTAT	21	TO TERMINAL 21 BELOW
TO CONTROL POWER SELECTOR SWITCH	29	TO R13 & R14
TO CONTROL POWER SELECTOR SWITCH	30	TO R13
TO FLOWMETER & HOURMETER	40	TO MS1, MS2 (F), UR1, UR2 (F), FS1, TD3, & TD5
TO CONTROL POWER, PEROX. MOD.,SPLITTER PUMP, & LAMP START SEL. SW.'S	40	TO SPLITTER PUMP FLOW SWITCH FS2 & TERMINAL 40 BELOW
TO LAMP DRIVE ENCLOSURE VENT & CIRCULATION FANS	40B	TO TD4
TO LAMP 1 SELECTOR SWITCH	42	TO C1
TO LAMP 2 SELECTOR SWITCH	43	TO C2
TO LAMP 3 SELECTOR SWITCH	44	TO C3
TO LAMP 4 SELECTOR SWITCH	46	TO C4
TO LAMP 5 SELECTOR SWITCH	47	TO C5
TO LAMP 6 SELECTOR SWITCH	48	TO C6
TO LAMP 7 SELECTOR SWITCH (FUTURE)	50	TO C7 (FUTURE)
TO LAMP 8 SELECTOR SWITCH (FUTURE)	51	TO C8 (FUTURE)
TO LAMP 9 SELECTOR SWITCH (FUTURE)	52	TO C9 (FUTURE)
TO LAMP 10 SELECTOR SWITCH (FUTURE)	54	TO C10 (FUTURE)
TO LAMP 11 SELECTOR SWITCH (FUTURE)	95	TO C11 (FUTURE)
TO LAMP 12 SELECTOR SWITCH (FUTURE)	96	TO C12 (FUTURE)
TO CHAMBER 2, CABLES C & D, YELLOW/BLACK WIRES	57C	TO UR2 (FUTURE)
TO CHAMBER 2, CABLES C & D, BROWN WIRES	57D	TO UR2 (FUTURE)
TO LAMPS 1 & 2 CT	60	TO LAMPS 1 & 2 AMMETER
TO LAMPS 3 & 4 CT	60	TO LAMPS 3 & 4 AMMETER
TO LAMPS 5 & 6 CT	60	TO LAMPS 5 & 6 AMMETER
TO LAMPS 7 & 8 CT (FUTURE)	60	TO LAMPS 7 & 8 AMMETER (FUTURE)
TO LAMPS 9 & 10 CT (FUTURE)	60	TO LAMPS 9 & 10 AMMETER (FUTURE)
TO LAMPS 11 & 12 CT (FUTURE)	60	TO LAMPS 11 & 12 AMMETER (FUTURE)
TO LAMP 1 CT	61	TO LAMP 1 AMMETER
TO LAMP 2 CT	63	TO LAMP 2 AMMETER
TO LAMP 3 CT	65	TO LAMP 3 AMMETER
TO LAMP 4 CT	67	TO LAMP 4 AMMETER
TO LAMP 5 CT	69	TO LAMP 5 AMMETER
TO LAMP 6 CT	71	TO LAMP 6 AMMETER
TO LAMP 7 CT (FUTURE)	73	TO LAMP 7 AMMETER (FUTURE)
TO LAMP 8 CT (FUTURE)	75	TO LAMP 8 AMMETER (FUTURE)
TO LAMP 9 CT (FUTURE)	77	TO LAMP 9 AMMETER (FUTURE)
TO LAMP 10 CT (FUTURE)	79	TO LAMP 10 AMMETER (FUTURE)
TO LAMP 11 CT (FUTURE)	81	TO LAMP 11 AMMETER (FUTURE)
TO LAMP 12 CT (FUTURE)	83	TO LAMP 12 AMMETER (FUTURE)
TO CHAMBER 1, CABLES A & B, YELLOW/BLACK WIRES	57	TO UR1
TO CHAMBER 1, CABLES A & B, BROWN WIRES	57A	TO UR1
TO CHAMBER 1, CABLES A & B, BLACK WIRES	15	TO TERMINAL 15 ABOVE & BELOW
TO CHAMBER 1, CABLES A & B, RED WIRES	30	TO TERMINAL 20 BELOW
TO CHAMBER 2, CABLES C & D, BLACK WIRES (FUTURE)	15	TO TERMINAL 15 ABOVE & BELOW
TO CHAMBER 2, CABLES C & D, RED WIRES (FUTURE)	30A	TO TERMINAL 30A BELOW
TO CHAMBER 1, RH & LH LAMP END GND, GREEN/YELLOW WIRES	GND	TO GROUND BUS
TO CHAMBER 1, CABLES A & B, YELLOW WIRES	2	TO TERMINAL 2 ABOVE & BELOW
TO CHAMBER 2, CABLES C & D, YELLOW WIRES (FUTURE)	2	TO TERMINAL 2 ABOVE & BELOW
TO CHAMBER 1, CABLES A & B, RED/BLACK WIRES	22	TO TERMINAL 22 BELOW
TO CHAMBER 1, CABLES A & B, BROWN/BLACK WIRES	40	TO TERMINAL 40 ABOVE & BELOW
TO CHAMBER 1, CABLES A & B, ORANGE WIRES	98	TO FS1 & TERMINAL 98 BELOW
TO CHAMBER 1, CABLES A & B, ORANGE/BLACK WIRES	97	TO FS1 & TERMINAL 97 BELOW
TO CHAMBER 2, RH & LH LAMP END GND, GREEN/YELLOW WIRES (FUTURE)	GND	TO GROUND BUS
TO CHAMBER 1, CABLES A & B, BLUE WIRES	89	TO MS1
TO CHAMBER 1, CABLES A & B, BLUE/BLACK WIRES	89	TO MS1
TO CHAMBER 2, CABLES C & D, BLUE WIRES (FUTURE)	89A	TO MS2 (FUTURE)
TO CHAMBER 2, CABLES C & D, BLUE/BLACK WIRES (FUTURE)	89A	TO MS2 (FUTURE)
TO CHAMBER 2, CABLES C & D, RED/BLACK WIRES (FUTURE)	22	TO TERMINAL 22 ABOVE & BELOW (FUTURE)
TO CHAMBER 2, CABLES C & D, BROWN/BLACK WIRES (FUTURE)	40	TO TERMINAL 40 ABOVE & BELOW (FUTURE)
TO CHAMBER 2, CABLES C & D, ORANGE WIRES (FUTURE)	98	TO TERMINAL 98 ABOVE (FUTURE)
TO CHAMBER 2, CABLES C & D, ORANGE/BLACK WIRES (FUTURE)	97	TO TERMINAL 97 ABOVE (FUTURE)
TO ANNUNCIATOR MASTER TERMINAL STRIP "N"	2	TO TERMINAL 2 ABOVE
TO ANNUNCIATOR MASTER TERMINAL STRIP "N"	3	TO TERMINAL 3 ABOVE
TO ANNUNCIATOR 1-1, "LOW WATER FLOW"	17A	TO R1 & TD1
TO ANNUNCIATOR 1-2, "PEROXIDE SYSTEM FAILURE"	18A	TO R2 & TD2
TO ANNUNCIATOR 3-1, "CHAMBER 1 LAMP ENCL. MOISTURE"	19	TO R3 & MS1
TO ANNUNCIATOR 3-2, "CHAMBER 2 LAMP ENCL. MOISTURE" (FUTURE)	19A	TO R4 & MS2 (FUTURE)
TO ANNUNCIATOR 3-1, "CHAMBER 1 LAMP ENCL. DOOR OPEN"	20	TO TERMINAL 20 ABOVE & R5
TO ANNUNCIATOR 3-2, "CHAMBER 2 LAMP ENCL. DOOR OPEN" (FUTURE)	20A	TO TERMINAL 20A ABOVE & R6 (FUTURE)
TO ANNUNCIATOR 4-4, "LAMP DRIVE ENCL. HIGH TEMP"	21	TO TERMINAL 21 ABOVE & R7
TO ANNUNCIATOR 4-2, (SPARE)	21A	TO TERMINAL 21A BELOW & R8
TO ANNUNCIATOR 5-4, "HIGH WATER TEMP"	22	TO TERMINAL 22 ABOVE & R9
TO ANNUNCIATOR 5-2, "REMOTE SHUT-DOWN"	23	TO TERMINAL 23 ABOVE & R10
TO ANNUNCIATOR 6-4, "OVERPRESSURE RELIEF FLOW"	24	TO R11 & FS1
TO ANNUNCIATOR 6-2, (SPARE)	24A	TO TERMINAL 24A BELOW & R12
TO ANNUNCIATOR MASTER TERMINAL STRIP "A"	25	TO RA1 & PUSHER SOCKET TERMINAL 8
TO ANNUNCIATOR MASTER TERMINAL STRIP "S"	26	TO ACK PUSHBUTTON
TO ANNUNCIATOR MASTER TERMINAL STRIP "CT"	27	TO TEST PUSHBUTTON
TO ANNUNCIATOR MASTER TERMINAL STRIP "F"	28	TO PUSHER SOCKET TERMINAL 6

3S7

ASX TERMINAL STRIP

TO TUBE CLEANER TERMINAL 2	2	TO TERMINAL 2 ABOVE & BELOW
TO TUBE CLEANER TERMINAL 3	3	TO TERMINAL 3 ABOVE & BELOW
TO TUBE CLEANER TERMINAL 15	15	TO TERMINAL 15 ABOVE & BELOW
TO TUBE CLEANER TERMINAL 40	40	TO TERMINAL 40 ABOVE & BELOW
TO TUBE CLEANER TERMINAL 91	91	TO TD6
TO TEST PUSHBUTTON	91A	TO TD6
TO TEST PUSHBUTTON	91B	TO "TUBE CLEANER FAILURE" PILOT LIGHT
TO TEST PUSHBUTTON	93	TO R16, R17, & R18
TO TEST PUSHBUTTON	94	TO "CHAMBER LOW WATER LEVEL" PILOT LIGHT
TO TUBE CLEANER GROUND	GND	TO GROUND BUS
TO PRIMARY GFI SENSOR	89	TO PRIMARY GFI RELAY
TO PRIMARY GFI SENSOR	89	TO PRIMARY GFI RELAY
TO SECONDARY GFI SENSOR	89A	TO SECONDARY GFI RELAY
TO SECONDARY GFI SENSOR	89A	TO SECONDARY GFI RELAY

3S7

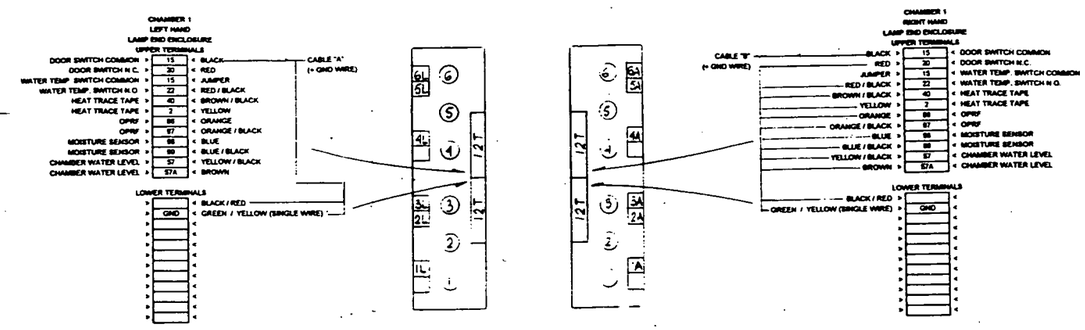

FUTURE

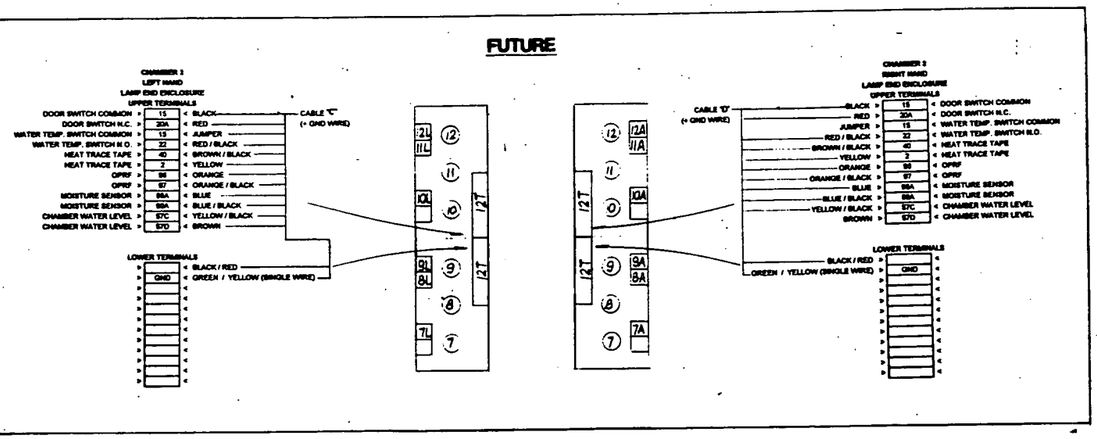

Project Title and Location	Brunswick Naval Rubber Reclamation Brunswick, ME
Construction Contract Number	N62472-93-C-0490/0020-0
Specification	Section 11345
Submittal Description Number	SD - 0 4
Vendor - Name Address Telephone Number	Peroxidation Systems Inc. 3131 E. Cambridge, #100, Tucson, AZ 85711 (520) 745-0555
Location within project	Blue 1,2,3,4,5,6 and Bottom Plenum

REV. NO.	BY	CHK	APPR.	DATE	QC
A	AVS	RL	PLT	4/6/94	BK

A REVISED PER SCR 268

THIS INFORMATION THEREIN IS NOT FINAL, BUT DELIVERED TO PERIOXIDATION SYSTEMS, INC. AND HAS PROVIDED IT SOLELY FOR AN EXPERIMENT & DEMONSTRATION PERIOXIDATION SYSTEMS, INC. AND HAS PROVIDED IT SOLELY FOR AN EXPERIMENT & DEMONSTRATION PURPOSE. OR ANY REPRODUCTION OF THIS DRAWING OR ANY PART THEREOF, OR ANY DISCLOSURE OF THE CONTENTS TO THIRD PARTIES WITHOUT THE PRIOR WRITTEN CONSENT OF PERIOXIDATION SYSTEMS, INC. IS PROHIBITED. ANY SUCH DISCLOSURE OR REPRODUCTION BY ANY ON ALL SUCH INFORMATION CONSTITUTES A VIOLATION OF THE ABOVE AND AS A EXPRESSLY REPRESENTED TO WRITTEN BY PERIOXIDATION SYSTEMS, INC.

Peroxidation Systems Inc
WATER TREATMENT THROUGH INNOVATIVE TECHNOLOGY

PROJECT: BRUNSWICK SN 251A

DR. AVS
CHK. RL
APPR. PLT
DATE 2.28.94
SCALE NONE
QC BK

TERMINAL IDENTIFICATION

DRAWING NUMBER
P182340-251

REV.

DWG. NO. P002060-251 SHT 1 OF 2 REV.

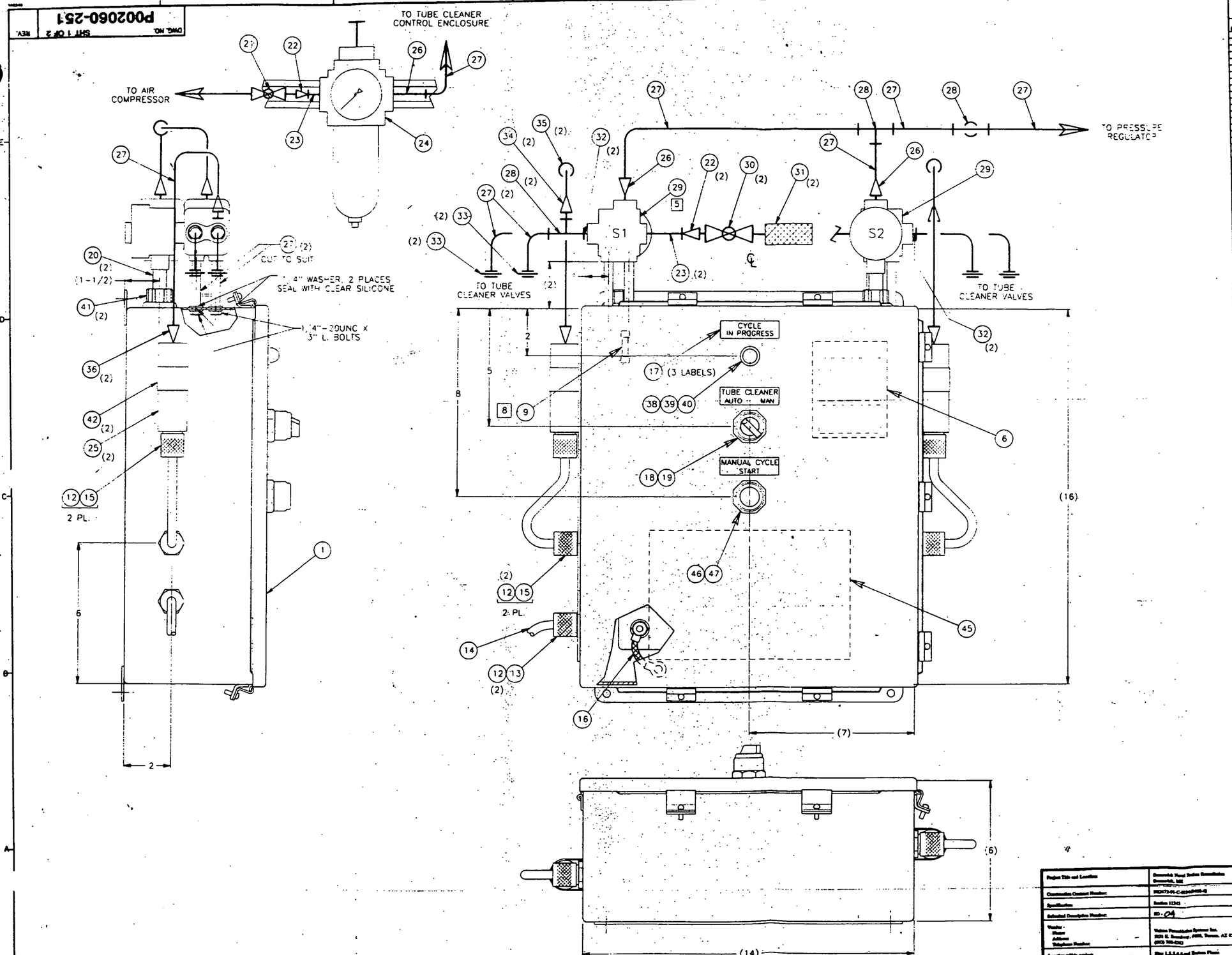

PARENT ITEM P002060-251-01
TUBE CLEANER CONTROL PANEL ASSEMBLY FOR BER NO SPIA

P002060-254

QTY (-01A)	QTY (-01)	FIND NO.	PART NO.	DESCRIPTION	REMARKS
	1	1	EE000174	ENCLOSURE, HOFF, 8A-1614CHNF NEMA 4	
	35	2	EH000318	TERMINAL BLOCK SECTIONAL WAGO 280-601	
	1	3	EH000319	END PLATE WAGO 280-308 FOR EH000318	
	1.5	4	ER000116	TRACK RELAY MOUNTING IDEC BHO-1000	
	4	5	EH000321	END STOP TRACK WAGO 209-101 FOR EH000318	
	1	6	EH000324	LABEL INSTRUCTION WAGO 210-186 FOR EH000318	
	1	7	EH000325	MARKER CARD WAGO 209-501 FOR EH000318	
	4	8	EH000337	TERMINAL BLOCK FUSED WAGO 282-128	
	5	9	EB000138	FUSE 1 AMP 250V 1/4"X1-1/4" BUSS #AGC-1	
	1	10	EE000139	BACK PANEL HOFF, A-16P14	
	1	11	EY000400	CONTROLLER,PLC,MICRO MODICONMAEG 110CPU311-01	
	8	12	EH000233	LOCKNUT 5 IN TB141SL (SELF-SEALING)	
	1	13	EF001024	CORD CONNECTOR,8 5 IN (5-.62) KELLEMS # SHC1024 BROWN	
	25	14	EV000150	CABLE SO CORD #18-8	
	4	15	EF001014	CORD CONNECTOR, 5" HUB 25-.31 DIA BLK HUBBELL #SHC-1016	
	1	16	SDS-193-03	DOOR GROUND STRAP	
	1	17	SDS-140-33	ENGRAVED LABEL SET FOR MINIPLC LOCAL PANEL	
1	1	18	ES000134	SWITCH SELECTOR OPERATOR,2 POS NEMA 4X SQD # 9001-SKS11B	
1	1	19	ES000133	CONTACT BLOCK SQD # 9001-KA3 N.C. SERIES G	
	1	20	EZ000284	NIPPLE CONDUIT 5 IN X CLOSE	
	1	21	MV000005	VALVE BALL 1/2 IN FPT CRANE # 9502 (OR EQUAL)	
	3	22	MP036075	BUSHING REDUCING 1/2 IN MPT X 3/8 IN FPT, 316SS MATL	
	3	23	MP880375	NIPPLE 3/8 X 1.5" 316SS	
	1	24	MC000411	FILTER/REG COMBO,3/8" W/ AUTO DRN,NORGREN# B08-307-A3MA	
	2	25	ES000184	SWITCH PRESSURE NC 15-150 PSIG ADJ STABLE UNITED ELEC 10-E11	
	3	26	MC000115	CONN MALE .375 IN T.U. X .375 IN MPT GYROLOK # 6CMM-316	
	5	27	MC000447	TUBING 3/8 IN DIA X .035 WALL 316SS WELDED	
	4	28	MC000294	TEE UNION .375 IN TUBE GYROLOK # 6TTT-316	
	2	29	ES000172	VALVE,SOLENOID,4-WAY,120VSRLASS BUNA,NYL,3/8"FPT,ASCOREF83420	
	2	30	MV811010	VALVE NEEDLE 5 IN FPT X 5 IN FPT 316SS HOKE # 3812 F8Y	
	2	31	MV000200	SILENCER MOTT#4004710-SS,0.5" MPT -OBSOLETE USE MV000201 !!!	
	4	32	MC000325	ADAPTER MALE .375 IN TUBE X .375 IN MPT GYRO # 6AMM-316	
	4	33	MC000240	ELBOW UNION .375 IN TUBE GYROLOK # 6LU-316	
	2	34	MC000213	REDUCER TUBE .25 IN T.U. X .375 IN GYROLOK # 4RR-316	
	2	35	MC000446	TUBING 1/4 IN DIA X .035 WALL 316 STAINLESS STEEL WELDED	
	2	36	MC000139	CONNECTOR FEM .25 IN T.U. X .125 IN FPT GYRO # 4CT3-316	
		37			
	1	38	EL000122	LAMP PILOT LIGHT SYLVANIA 120 PSB (MINIATURE LAMPS)	
	1	39	EL000123	BODY, PILOT LIGHT, SLIDE BASE SYLVANIA #30089	
	1	40	EL000124	LENS, GREEN, PILOT LIGHT SYLVANIA #30112	
	2	41	EZ000229	HUB MYERS 311 5 IN	
	2	42	MH000007	PIPE CLAMP, PVC, 3/4" NOMINAL HARRINGTON # 25CUC	
1	1	43	ES000226	SWITCH, DIP, 10 CONTROL DESIGN #RS-10	
1	1	44	ER000140	SOCKET, DIP SWITCH W/TERMINALS WEDMULLER #RI-20 DIP	
1	1	45	SDS-033-01	INSTRUCTION CARD, TUBE CLEANER CONTROL PANEL WITH MINI PLC	
1	1	46	ES000123	PUSHBUTTON OPERATOR NEMA 4X SQD #9001-SKR11J	
1	1	47	ES000132	CONTACT BLOCK SQD # 9001-KA2 N.O. SERIES J	
		48			
		49	0		

Project Title and Location	Brunswick Flood Stolon Remediation, Brunswick, NC
Construction Contract Number	DE-AC73-94-C-92040-0-0
Specification	Section 11240
Industrial Description Number	ID-04
Vendor - Name - Address - Telephone Number	Peroxidation Systems Inc. 2020 E. Broadway, Ariz. Tucson, AZ 85711 (602) 795-0202
Location within project	Site 1,2,3,4,5 and Station Plants

PEROXIDATION SYSTEMS, INC. WHO HAS PROVIDED IT HERE, IS NOT FRAUD, NOT COLLUSION IN PERSONAL TORT SYSTEMS, INC. WHO HAS PROVIDED IT HERE, IS FREE AND EXPRESSLY CONTRACTED WITH ALL PERSONS, FIRMS OR CORPORATIONS WHO RECEIVE THEIR CONTRACTS, SHALL BE BOUND BY THIS ACT OF RECEIPTING UNDER SAME SHALL BE NOT ASSIGNED TO ANY OTHER PERSONS OR FIRMS WHOSOEVER OR ANY ONE ELSE, NOR SHALL ANY PERSONS OR FIRMS WHOSOEVER OR ANY ONE ELSE, WHO HAVE RECEIVED IT, DUPLICATE OR EXPRESS REPRODUCE IT OR ANY PORTION THEREOF, EXCEPT FOR PERSONAL USE AS AN EMPLOYEE OF PEROXIDATION SYSTEMS, INC.

REV. NO.	BY	CHK	APPR.	DATE

Peroxidation Systems Inc.
WATER TREATMENT THROUGH INNOVATIVE TECHNOLOGY

PROJECT: BRUNSWICK NS SN 251

DR. GLC
CHK. RL/SW
APPR. RJP
DATE 1-9-94
SCALE 1:2
QC BLK

TUBE CLEANER CONTROL PANEL ASSEMBLY

DRAWING NUMBER SHT 1 OF 2 REV.

P002060-251

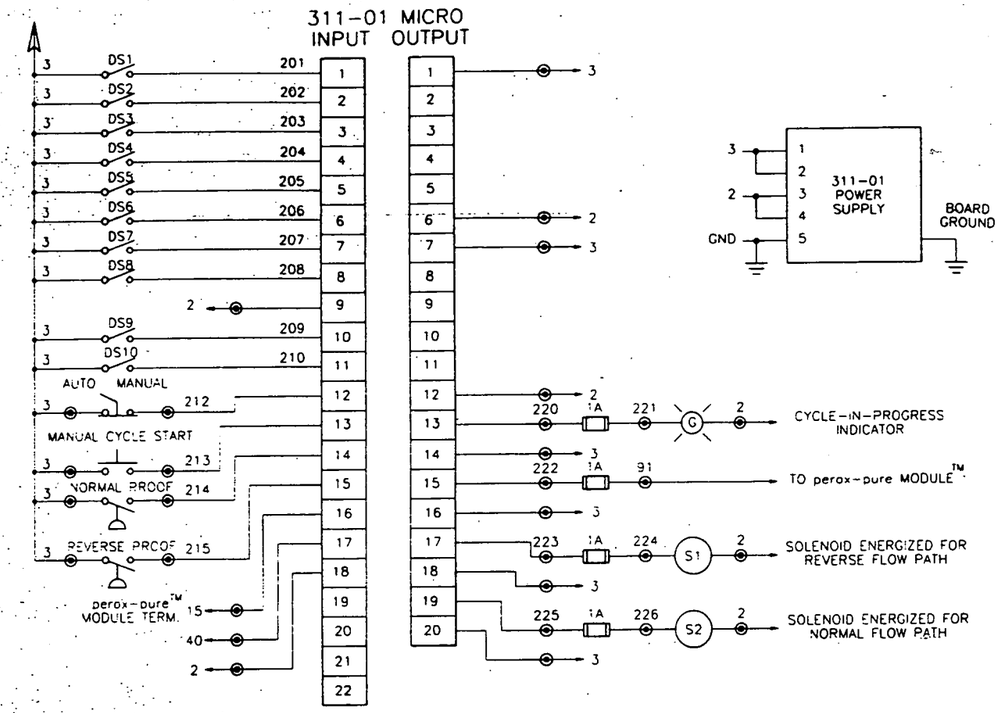

NOTES:

1. ASSEMBLE AS SHOWN USING STANDARD NON-CONTROLLED HARDWARE AS REQD.
2. WIRE PER STANDARD SHOP PRACTICES AND WIRING SCHEMATIC SHOWN.
3. UNLESS OTHERWISE NOTED, ALL DIMENSIONS ±1/4 IN.
4. SEE PIPING ASSEMBLY DRAWING FOR LOCATION OF FIND NO .24 (FILTER/REGULATOR) AND ASSOCIATED PIPING.
5. LOCATION MAY VARY. REFER TO INSTALLATION REQUIREMENTS AND LOCATE ACCORDINGLY.
6. USE PERMANENT STICKERS OR MARKING TO IDENTIFY SOLENOIDS AND PNEUMATIC CONNECTIONS AS SHOWN. (EX. S1, S2, A1 AND A2)
7. SET PRESSURE SWITCHES TO 70 PSIG
8. ONE EACH FIND NO. 9 INCLUDED AS A SPARE. TAPE TO INSIDE OF FIND NO. 1 DOOR APPROXIMATELY WHERE AS SHOWN.
9. PRIOR TO MOUNTING CONTROLLER, CONSULT ENGINEERING FOR PROGRAM INSTALLATION.
10. TUBE CLEANER CONTROL PANEL IS DESIGNED FOR USE AS FOLLOWS:

    SOLENOID S1 IS NORMALLY DE-ENERGIZED:
    PORT A1-NORMALLY TO VENT
    PORT B1-NORMALLY PRESSURIZED

    SOLENOID S2 IS NORMALLY ENERGIZED:
    PORT A2-NORMALLY PRESSURIZED
    PORT B2-NORMALLY TO VENT

11. SET DIP SWITCH (FIND NO. 43) WITH SWITCHES 1, 4 AND 10 IN THE ON POSITION. SET ALL OTHER SWITCHES TO THE OFF POSITION. CONSULT INSTRUCTION CARD (FIND NO. 45) FOR SETTING INTERPRETATION.

TERMINAL STRIP		
TO PEROX-PURE MAIN TERMINAL 2	2	TO SOLENOID S1 (WHITE WIRE)
TO PLC POWER SUPPLY TERMINALS 3 & 4	2	TO SOLENOID S2 (WHITE WIRE)
TO PLC INPUT TERMINALS 9 & 10	2	TO CYCLE IN PROGESS INDICATOR
TO PLC OUTPUT TERMINALS 6 & 12	2	
TO PEROX-PURE MAIN TERMINAL 3	3	TO PLC OUTPUT TERMINALS 1, 7, 14, 16, 18, 20
TO DIPSWITCH SOCKET, TERMINALS 11 THRU 20	3	TO NORMAL PROOF AIR PRESSURE SWITCH
TO PLC POWER SUPPLY TERMINALS 1 & 2	3	TO REVERSE PROOF AIR PRESSURE SWITCH
TO SELECTOR SWITCH & PUSHBUTTON	3	
TO PEROX-PURE MAIN TERMINAL 15	15	TO PLC INPUT TERMINAL 16
TO PEROX-PURE MAIN TERMINAL 40	40	TO PLC INPUT TERMINAL 17
TO PEROX-PURE MAIN TERMINAL 91	91	TO FUSED TERMINAL BLOCK TERMINAL 91
TO SELECTOR SWITCH	212	TO PLC INPUT, TERMINAL 12
TO PUSHBUTTON	213	TO PLC INPUT TERMINAL 13
TO PLC INPUT TERMINAL 14	214	TO NORMAL PROOF AIR PRESSURE SWITCH
TO PLC INPUT TERMINAL 15	215	TO REVERSE PROOF AIR PRESSURE SWITCH
TO PEROX-PURE MAIN GROUND	GND	TO PLC POWER SUPPLY TERMINAL 5
TO ENCLOSURE GROUND STUD	GND	TO SOLENOID S1 (GREEN WIRE)
TO PLC BOARD GROUND	GND	TO SOLENOID S2 (GREEN WIRE)

DIP SWITCH SOCKET SEE DETAIL 1				
TO PLC OUTPUT TERMINAL 13	220	1A	221	TO CYCLE IN PROGRESS INDICATOR
TO PLC OUTPUT TERMINAL 15	222	1A	91	TO TERMINAL 91 ABOVE
TO PLC OUTPUT TERMINAL 17	223	1A	224	TO SOLENOID S1 (BLACK WIRE)
TO PLC OUTPUT TERMINAL 19	225	1A	226	TO SOLENOID S2 (BLACK WIRE)

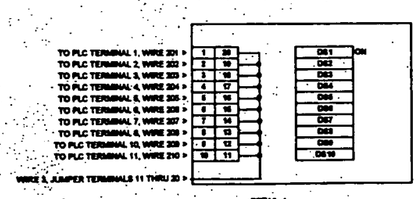

DETAIL 1
DIP SWITCH SOCKET

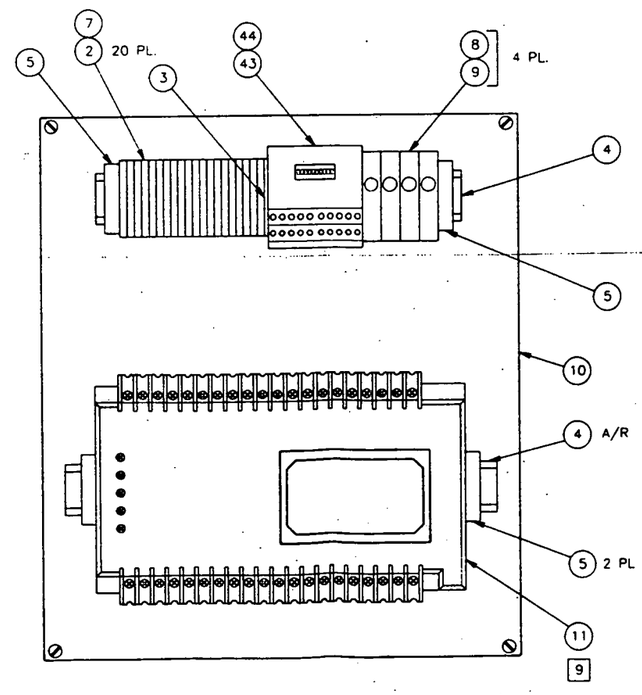

Project Title and Location	Brunswick Naval Sulfur Demulfation Brunswick, MS
Construction Contract Number:	N62472-91-C-0894/0002-0
Specification:	Section 11242
Submittal Description Number:	SD-04
Vendor: Shape Address Telephone Number:	Peroxidation Systems Inc. 3620 E. Broadway, AVE, Tucson, AZ 85711 (602) 790-5362
Location within project	Blue 1,2,3,4,5,6 and Bottom Plans

THE INFORMATION CONTAINED HEREWITH IS NOT FINAL, BUT SUBJECT TO PEROXIDATION SYSTEMS, INC. RIGHT AND PROTECTION IT SOLELY FOR AN EXPRESSLY RESTRICTED USE. ALL PERSONS WHO RECEIVE SUCH INFORMATION SHALL BE ALL PERSONS WHO ACT OF RECEIVING HEREOF WHO SHALL BE TO HAVE AGREED TO SUCH USE. REPRODUCTION, IN WHOLE OR PARTS, OR OTHER DISCLOSURE OR USE WHATSOEVER OF ANY AND ALL SUCH INFORMATION EXCEPT SUCH RESTRICTED USE AS IS EXPRESSLY AUTHORIZED IN WRITING BY PEROXIDATION SYSTEMS, INC.

REV. NO.	BY	CHK	APPR.	DATE

Peroxidation Systems Inc
WATER TREATMENT THROUGH INNOVATIVE TECHNOLOGY

PROJECT: BRUNSWICK NS SN 251

DR. GLC
CHK. RL/SW
APPR. RJS
DATE 1-9-94
SCALE 1:2
QC BK

TUBE CLEANER CONTROL PANEL ASSEMBLY

DRAWING NUMBER SHT 2 OF 2 — **P002060-251** — REV.

WILDEN®

AIR OPERATED DOUBLE DIAPHRAGM PUMPS

M1 Engineering Operation and Maintenance

MODEL M1 METAL
MODEL M1 CHAMP
MODEL M1 FOOD PROCESSING
MODEL M1 SOLENOID-OPERATED
MODEL M1 ULTRAPURE III

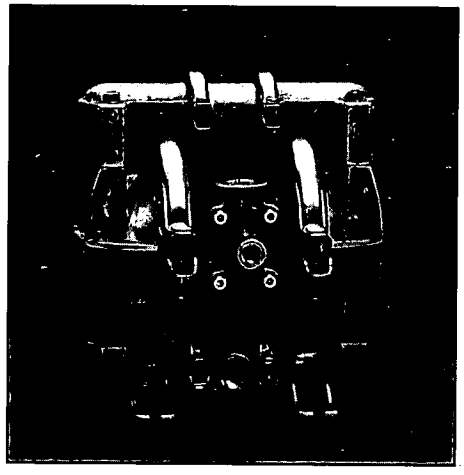

M1 METAL *LUBED AND LUBE-FREE*

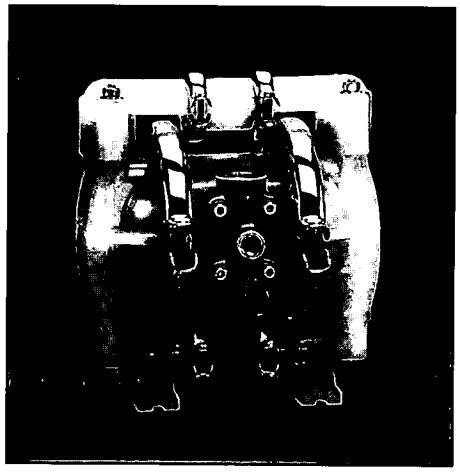

M1 CHAMP *LUBED AND LUBE-FREE*

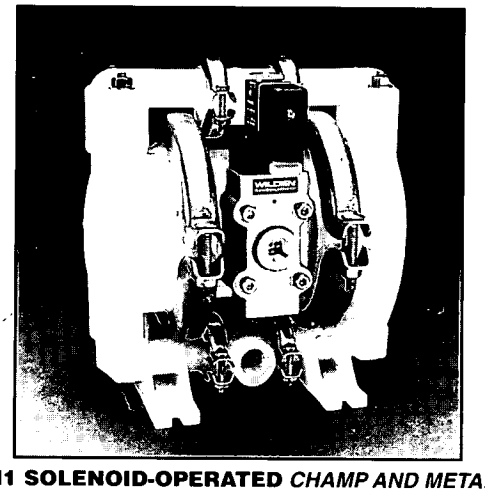

M1 SOLENOID-OPERATED *CHAMP AND METAL*

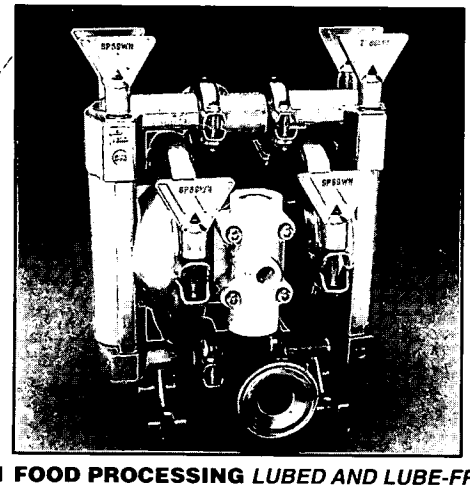

M1 FOOD PROCESSING *LUBED AND LUBE-FREE*

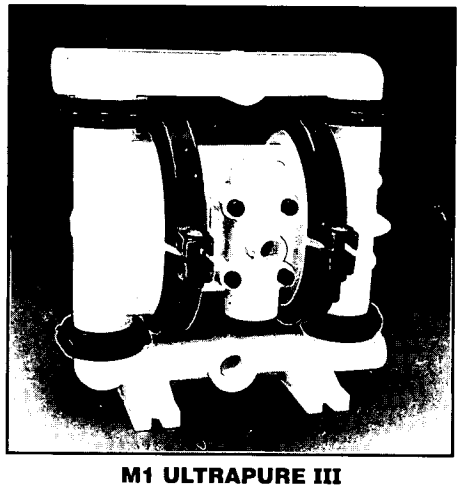

M1 ULTRAPURE III

COPYRIGHT 1994 WILDEN PUMP & ENGINEERING CO.

RBG P/S-01 8/94
REPLACES 5/94

THE WILDEN PUMP — HOW IT WORKS

The Wilden diaphragm pump is an air-operated, positive displacement, self-priming pump. These drawings show flow pattern through the pump upon its initial stroke. It is assumed the pump has no fluid in it prior to its initial stroke.

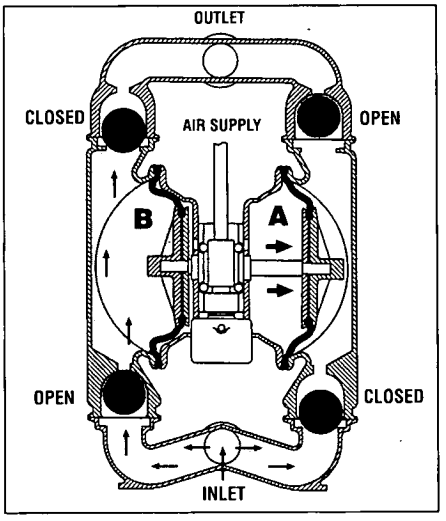

FIGURE 1 The air valve directs pressurized air to the back side of diaphragm A. The compressed air is applied directly to the liquid column separated by elastomer diaphragms. The diaphragm acts as a separation membrane between the compressed air and liquid, balancing the load and removing mechanical stress from the diaphragm which allows for millions of flex cycles. The compressed air moves the diaphragm away from the center block of the pump. The opposite diaphragm is pulled in by the shaft connected to the pressurized diaphragm. Diaphragm B is now on its suction stroke; air behind the diaphragm has been forced out to the atmosphere through the exhaust port of the pump. Diaphragm A is working against atmospheric air pressure. The movement of diaphragm B toward the center block of the pump creates a vacuum within chamber B. Atmospheric pressure forces fluid into the inlet manifold forcing the inlet valve ball off its seat. Liquid is free to move past the inlet valve ball and fill the liquid chamber.

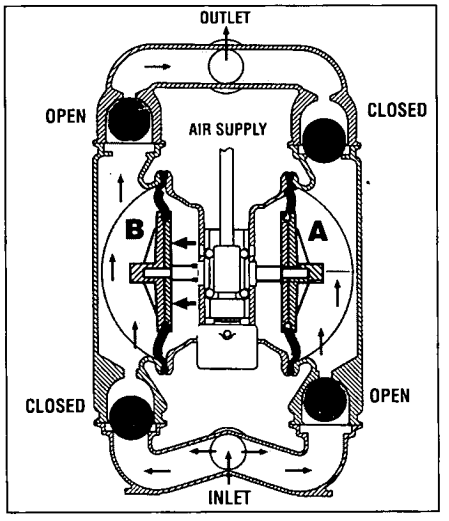

FIGURE 2 When the pressurized diaphragm, diaphragm A, reaches the limit of its discharge stroke, the air valve redirects pressurized air to the back side of diaphragm B. The pressurized air forces diaphragm B away from the center block while pulling diaphragm A to the center block. Diaphragm B is now on its discharge stroke. Diaphragm B forces the inlet valve ball onto its seat due to the hydraulic forces developed in the liquid chamber and manifold of the pump. These same hydraulic forces lift the discharge valve ball off its seat, while the opposite discharge valve ball is forced onto its seat, forcing fluid to flow through the pump discharge. The movement of diaphragm A to the center block of the pump creates a vacuum within liquid chamber A. Atmospheric pressure forces fluid into the inlet manifold of the pump. The inlet valve ball is forced off its seat allowing the fluid being pumped to fill the liquid chamber.

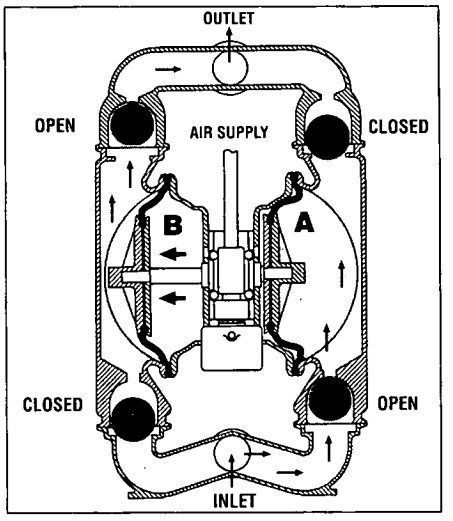

FIGURE 3 At completion of the stroke, the air valve again redirects air to the back side of diaphragm A, which starts diaphragm B on its exhaust stroke. As the pump reaches its original starting point, each diaphragm has gone through one exhaust and one discharge stroke. This constitutes one complete pumping cycle. The pump may take several cycles to completely prime depending on the conditions of the application.

WILDEN PUMP DESIGNATION SYSTEM

XX / XX / XX / XX / XX / LF
1 2 3 4 5 6 7

1 MODEL (SIZE)
2 WETTED CONSTRUCTION
3 NON-WETTED CONSTRUCTION
4 DIAPHRAGMS
5 VALVE BALLS
6 VALVE SEATS (O-RINGS)
7 LUBE-FREE MODEL

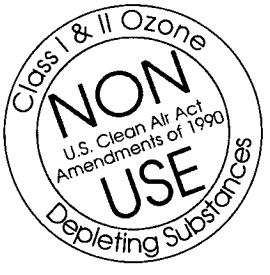

Temperature Limits:

Polypropylene	**+32°F to 175°F**	**(0°C to 79.4°C)**
PVDF	**+10°F to +225°F**	**(–12.2°C to 107.2°C)**
Teflon® PFA	**–20°F to 300°F**	**(–28.9°C to 148.9°C)**

CAUTION: Maximum temperature limits are based upon mechanical stress only. Certain chemicals will significantly reduce maximum safe operating temperatures. Consult engineering guide for chemical compatibility and temperature limits.

SUGGESTED INSTALLATION

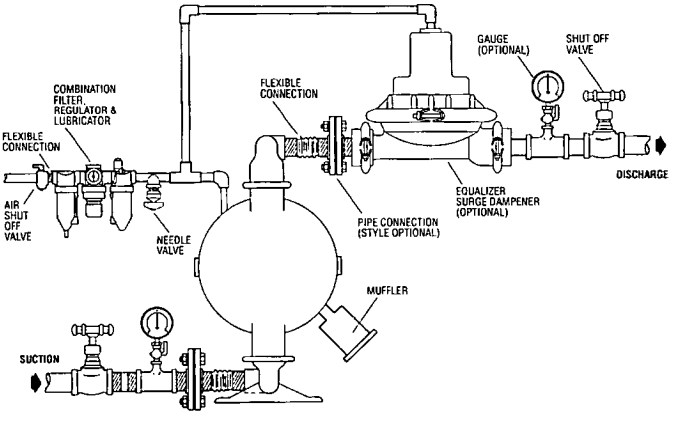

CAUTION: WEAR SAFETY GLASS. WHEN DIAPHRAGM RUPTURE OCCURS, MATERIAL BEING PUMPED MAY BE FORCED OUT AIR EXHAUST.

"Champ" series pumps are made of virgin plastic and are not UV stabilized. Direct sunlight for prolonged periods can cause deterioration of plastics.

NOTE: Lubed pumps must be lubricated. Wilden suggests an arctic 5 weight oil (ISO grade 15).

WARNING: Prevention of static sparking — If static sparking occurs, fire or explosion could result. Pump, valves, and containers must be grounded when handling flammable fluids and whenever discharge of static electricity is a hazard. To ground the Wilden "Champ," all clamp bands must be grounded to a proper grounding point.

®TEFLON IS A REGISTERED TRADEMARK OF E.I. DUPONT CORP.

TABLE OF CONTENTS

PAGE #

SECTION 1 — DIMENSIONAL DRAWINGS

A. Air-operated METAL M1 2
B. Solenoid-operated METAL M1 2
C. Air-operated FOOD PROCESSING M1 3
D. Solenoid-operated FOOD PROCESSING M1 3
E. Air-operated CHAMP M1 (plastic construction) 4
F. Solenoid-operated CHAMP M1 (plastic construction) 4
G. ULTRAPURE III (air-operated) 5

SECTION #2 — PERFORMANCE CURVES / TECHNICAL DATA

A. METAL M1 (Rubber/TPE-fitted) 6
B. METAL M1 (Teflon-fitted) 6
C. CHAMP M1 (Rubber/TPE-fitted) 7
D. CHAMP M1 (Teflon-fitted) 7

SECTION #3 — INSTALLATION

A. Air-operated METAL and CHAMP M1 8
B. Solenoid-operated METAL and CHAMP M1 8–9
C. ULTRAPURE III (air-operated) 10

SECTION #4 — SUGGESTED OPERATION AND MAINTENANCE

A. Air-operated METAL, CHAMP, and ULTRAPURE III 11
B. Solenoid-operated METAL and CHAMP 12

SECTION #5 — TROUBLESHOOTING

A. Air-operated METAL, CHAMP, and ULTRAPURE III 13
B. Solenoid-operated METAL and CHAMP 13

SECTION #6 — DIRECTIONS FOR DISASSEMBLY / REASSEMBLY

A. Air-operated and solenoid-operated METAL and CHAMP M1 15–23
B. Air-operated ULTRAPURE III 24–30

SECTION #7 — EXPLODED VIEW / PARTS LISTING

A. Air-operated METAL M1 (Lubed and lube-free) 32–33
B. Air-operated CHAMP M1 (Lubed and lube-free) 34–36
C. Solenoid-operated METAL M1 38–39
D. Solenoid-operated CHAMP M1 40–42
E. Elastomer options for METAL and CHAMP M1 43
F. Air-operated ULTRAPURE III 44–45

SECTION 1A — DIMENSIONAL DRAWING MODEL M1 METAL PUMP

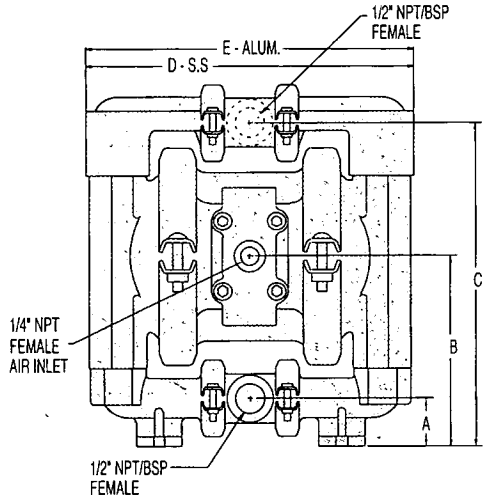

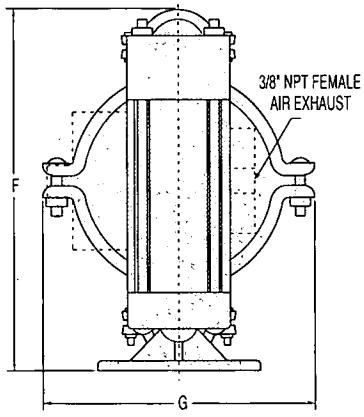

DIMENSIONS – M1 (METAL)		
ITEM	STANDARD (inch)	METRIC (mm)
A	1 1/8	28.6
B	4 9/16	115.9
C	7 13/16	198.5
D	8	203.2
E	8 5/32	207.2
F	8 3/4	222.3
G	6 7/8	174.6
H	5 1/2	139.7
J	4 13/32	111.9
K	3 1/4	82.6
L	4	101.6
M	1 3/16	30.2
N	1 3/16	30.2
P	9/32	7.1

BSP threads available.

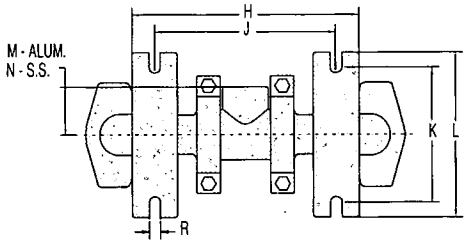

SECTION 1B — DIMENSIONAL DRAWING MODEL M1 METAL SOLENOID-OPERATED PUMP

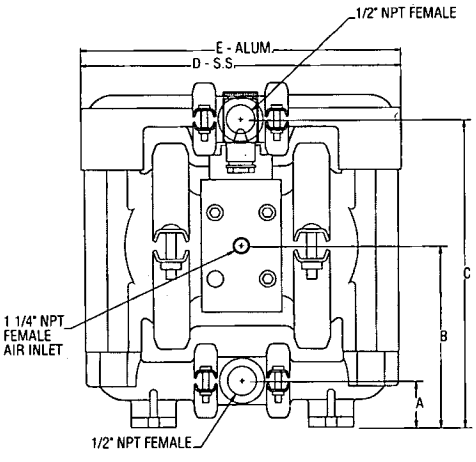

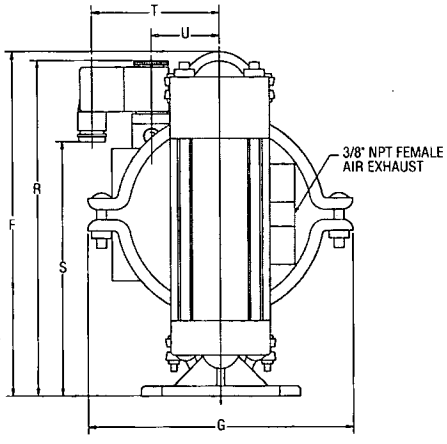

DIMENSIONS – M1 SOLENOID OPERATED (METAL)		
ITEM	STANDARD (inch)	METRIC (mm)
A	1 1/4	31.8
B	4 5/8	117.5
C	7 3/4	196.9
D	8	203.2
E	8 3/16	208
F	8 3/4	222.3
G	6 3/4	171.4
H	5 9/16	141.3
J	4 7/16	112.7
K	3 1/4	82.6
L	4	101.6
M	1 5/32	29.4
N	1 3/16	30.2
P	9/32	7.1
R	8 7/8	225.4
S	6 3/8	161.9
T	3 7/32	81.8
U	1 3/4	44.5

*BSP threads available.

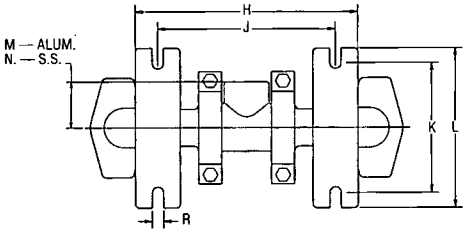

SECTION 1C — DIMENSIONAL DRAWING MODEL M1 FOOD PROCESSING PUMP

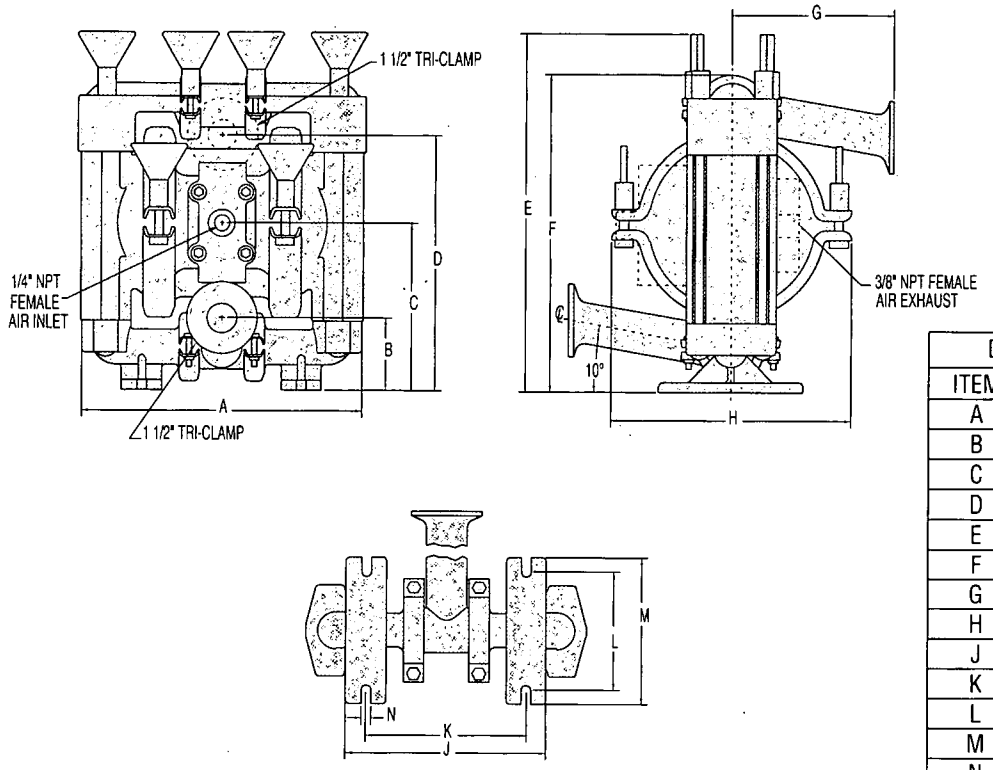

DIMENSIONS – M1 (FOOD PROCESSING)		
ITEM	STANDARD (inch)	METRIC (mm)
A	8 1/32	204.0
B	1 29/32	48.4
C	4 21/32	118.3
D	6 7/8	174.6
E	10 1/32	254.8
F	8 3/4	222.3
G	4 17/32	115.1
H	6 13/16	173.0
J	5 5/8	142.9
K	4 15/32	113.5
L	3 1/4	82.6
M	4	101.6
N	9/32	7.1

SECTION 1D — DIMENSIONAL DRAWING MODEL M1 FOOD PROCESSING SOLENOID-OPERATED PUMP

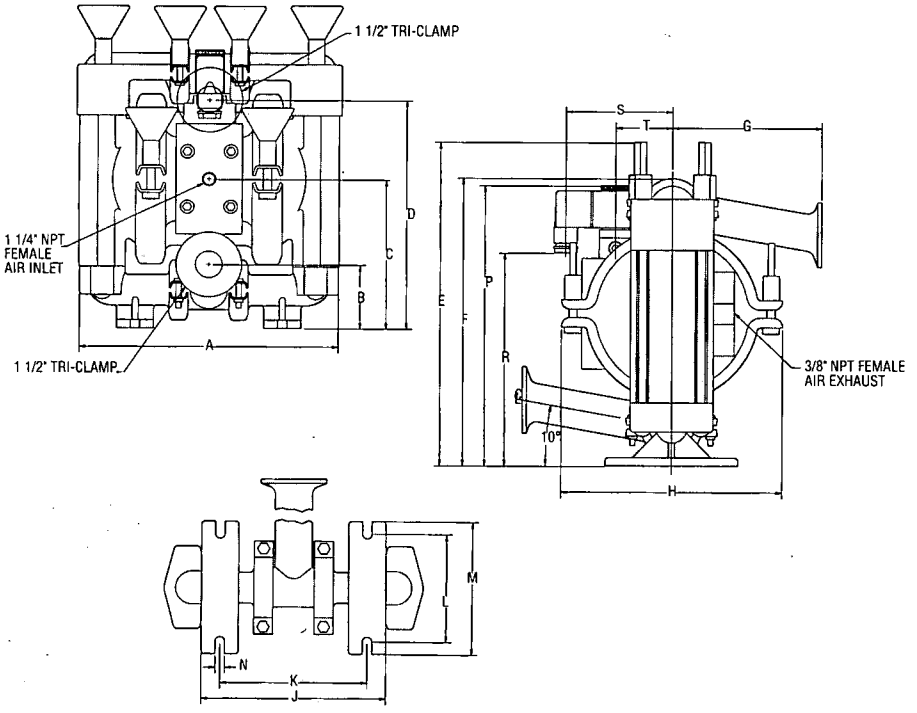

DIMENSIONS – M1 SOLENOID OPERATED (FOOD GRADE)		
ITEM	STANDARD (inch)	METRIC (mm)
A	8	203.2
B	1 15/16	49.2
C	4 5/8	117.5
D	7	177.8
E	9 7/8	250.8
F	8 3/4	222.3
G	4 1/2	114.3
H	6 3/4	171.5
J	5 9/16	141.3
K	4 7/16	112.7
L	3 1/4	82.6
M	4	101.6
N	9/32	7.1
P	8 15/32	215.1
R	6 13/32	162.7
S	8 7/32	81.8
T	1 3/4	44.5

SECTION 1E — DIMENSIONAL DRAWING MODEL M1 CHAMP PUMP (Plastic)

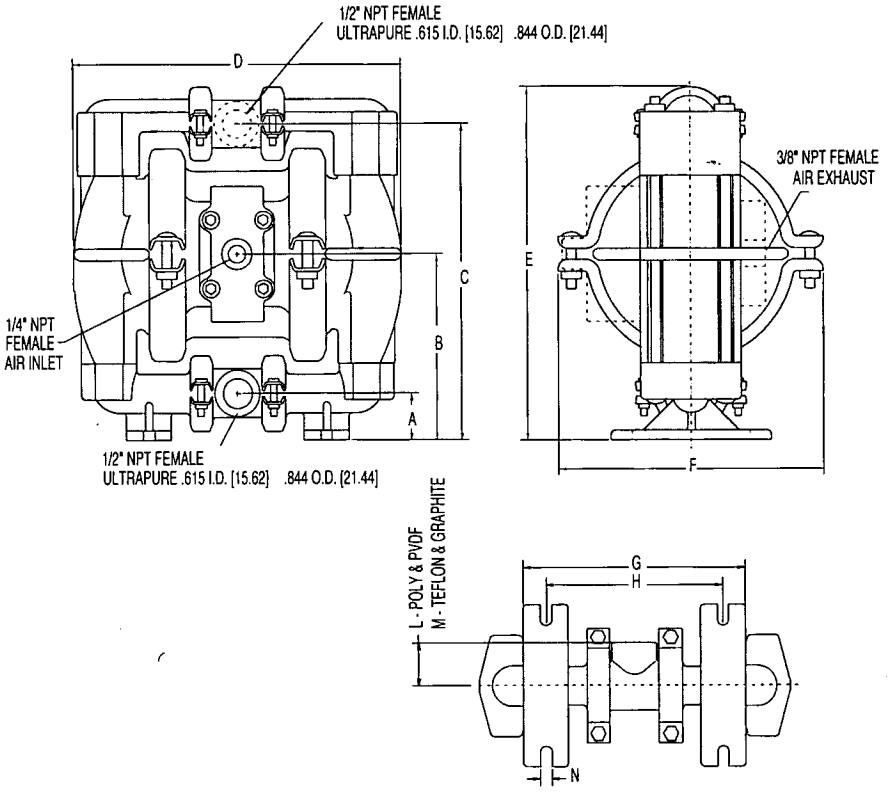

DIMENSIONS – M1 (PLASTIC)		
ITEM	STANDARD (inch)	METRIC (mm)
A	1 5/32	29.3
B	4 1/2	114.2
C	7 11/16	195.3
D	8 3/16	207.8
E	8 5/8	219.1
F	7	177.8
G	5 21/32	143.7
H	4 1/2	114.2
J	3 1/2	88.8
K	4	101.5
L	1 3/32	27.8
M	27/32	21.4
N	9/32	7.1

SECTION 1F — DIMENSIONAL DRAWING MODEL M1 CHAMP (Plastic) SOLENOID-OPERATED PUMP

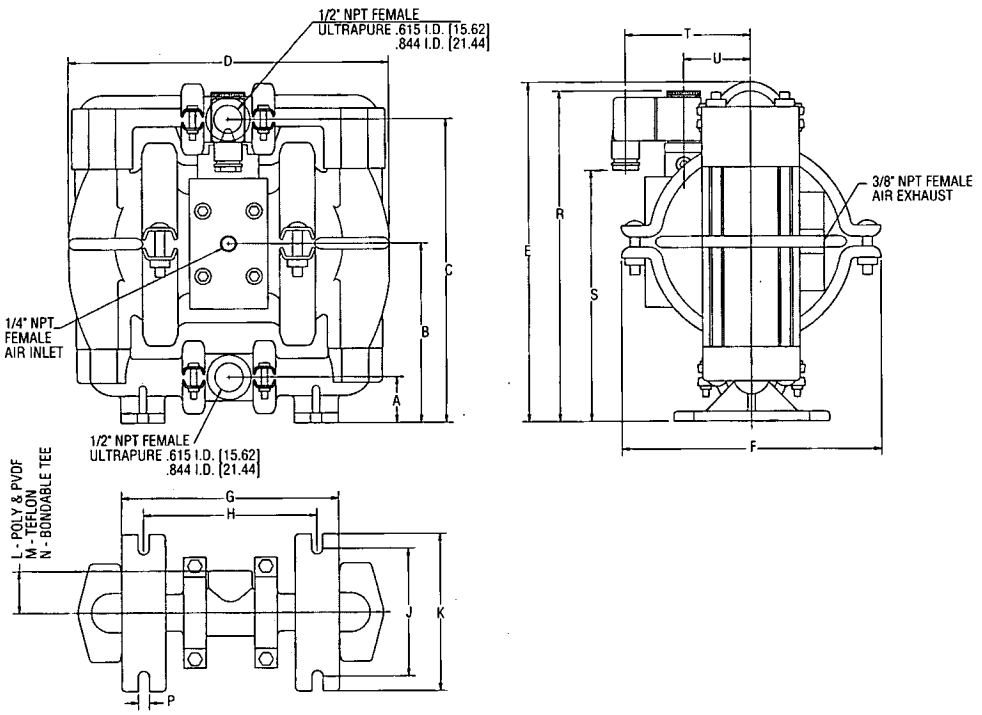

DIMENSIONS – M1 SOLENOID OPERATED (PLASTIC)		
ITEM	STANDARD (inch)	METRIC (mm)
A	1 5/32	29.4
B	4 1/2	114.2
C	7 3/4	196.9
D	8 3/16	208
E	8 3/4	222.3
F	6 3/4	171.5
G	5 9/16	141.3
H	4 7/16	112.7
J	3 1/4	82.6
K	4	101.6
L	1 5/32	29.4
M	1 3/16	30.2
N	3 5/16	83.4
P	9/32	7.1
R	8 3/8	212.7
S	6 5/16	160.3
T	3 7/32	81.8
U	1 3/4	44.5

SECTION 1G — DIMENSIONAL DRAWING
MODEL M1 ULTRAPURE III PUMP (Teflon® PFA)

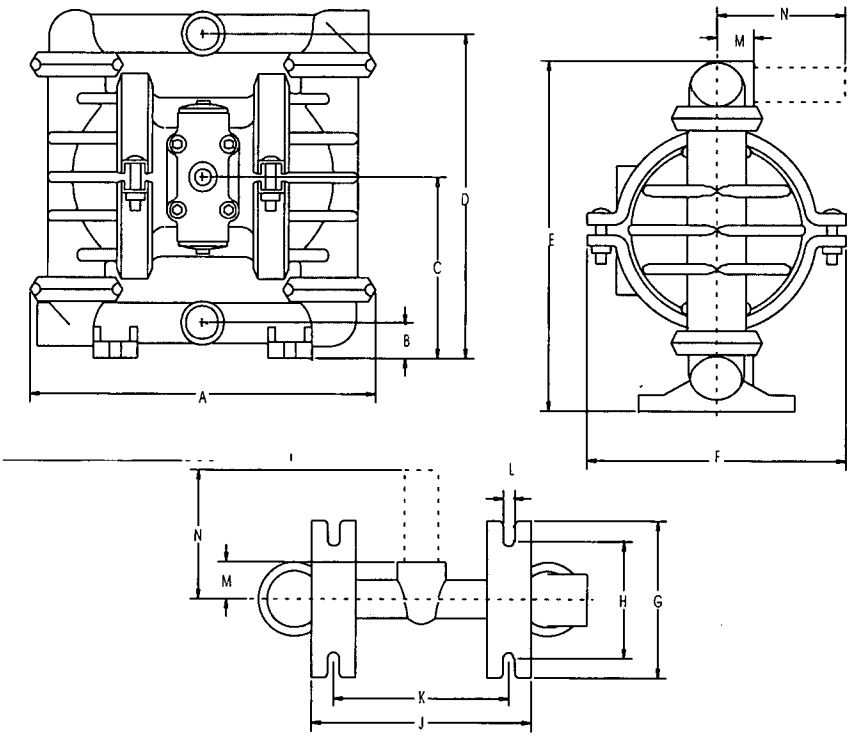

DIMENSIONS – M1 (ULTRAPURE III)		
ITEM	STANDARD (inch)	METRIC (mm)
A	8 7/8	223.6
B	15/16	23.6
C	4 3/4	119.7
D	8 3/8	211
E	9	226.7
F	6 3/4	170.0
G	4	100.8
H	3	75.6
J	5 5/8	141.7
K	4 1/2	113.4
L	1/4	6.3
M	1	25.2
FOR BONDABLE TEE SECTION		
N	3 5/16	83.5

SECTION 2A — MODEL M1 METAL (Rubber/TPE-Fitted) Pump Performance Curve

Weight.....Aluminum 12 lbs.
Stainless Steel 19.5 lbs.
Air Inlet.....¼" Female NPT
Inlet.....½" Female NPT[1]
Outlet.....½" Female NPT[1]
Suction Lift.....**Rubber 10' Dry**
25' Wet
TPE 7' Dry
25' Wet
Displacement per Stroke.... .026 gal.[2]
Max. Size Solids.....1/16" Dia.

Example: To pump 5 gpm against a discharge pressure of 40 psig requires 50 psig and 3 scfm air consumption. (See dot on chart.)

[1]BSP threads available.
[2]Displacement per stroke calculated at 70 psig air inlet against 30 psig discharge head pressure.

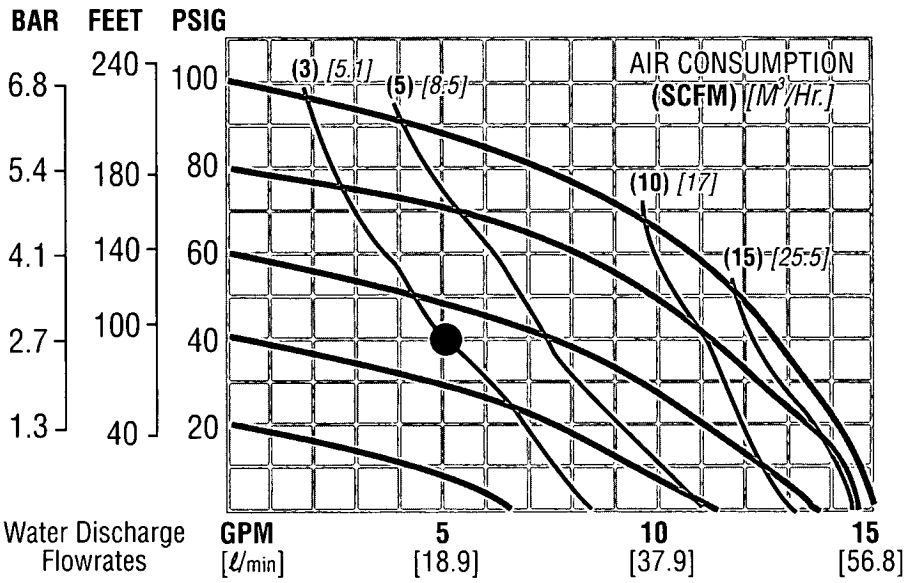

Volumes indicated on chart were determined by actually pumping water in calibrated tanks.

SECTION 2B — MODEL M1 METAL (Teflon®-Fitted) Pump Performance Curve

Weight.....Aluminum 12 lbs.
Stainless Steel 19.5 lbs.
Air Inlet.....¼" Female NPT
Inlet.....½" Female NPT[1]
Outlet.....½" Female NPT[1]
Suction Lift.....**8' Dry**
25' Wet
Displacement per stroke..... .02 gal.[2]
Max. Size Solids.....1/16" Dia.

Example: To pump 5 gpm against a discharge pressure of 40 psig requires 57 psig and 3.8 scfm air consumption. (See dot on chart.)

[1]BSP threads available.
[2]Displacement per stroke calculated at 70 psig air inlet against 30 psig discharge head pressure.

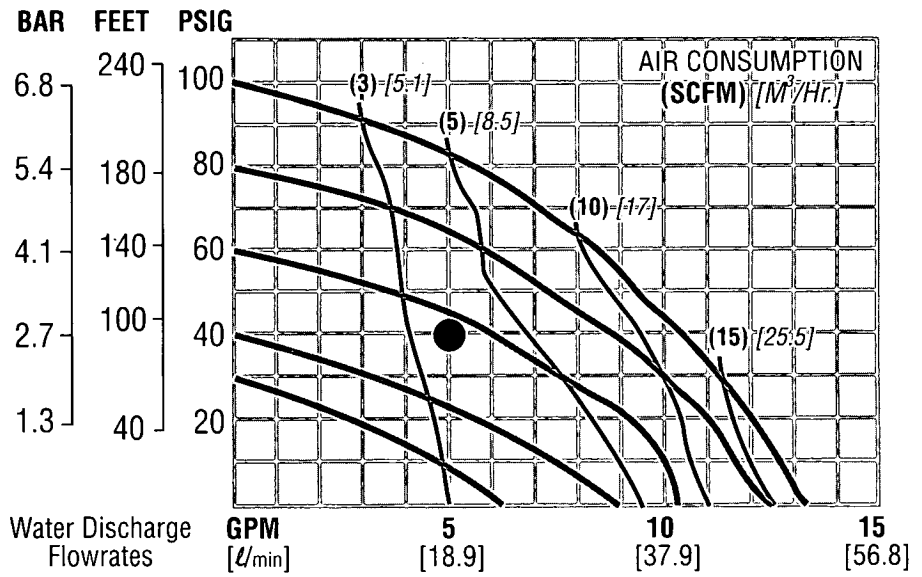

Volumes indicated on chart were determined by actually pumping water in calibrated tanks.

SECTION 2C — MODEL M1 CHAMP (Rubber/TPE-Fitted) Pump Performance Curve

Weight .....Polypropylene 9.25 lbs.
PVDF 10.75 lbs.
Air Inlet .....¼" Female NPT
Inlet.....½" Female NPT
Outlet .....½" Female NPT
Suction Lift .....**Rubber 10' Dry**
25' Wet
TPE 8'Dry
25' Wet
Displacement per stroke..... .018 gal.[1]
Lube-free .027 gal.[1]
Solenoid-operated .01 gal.[1]
Max. Size Solids .....1/16" Dia.

Example: To pump 5 gpm against a discharge pressure of 40 psig requires 50 psig and 3.2 scfm air consumption. (See dot on chart.)

[1]Displacement per stroke calculated at 70 psig air inlet against 30 psig discharge head pressure.

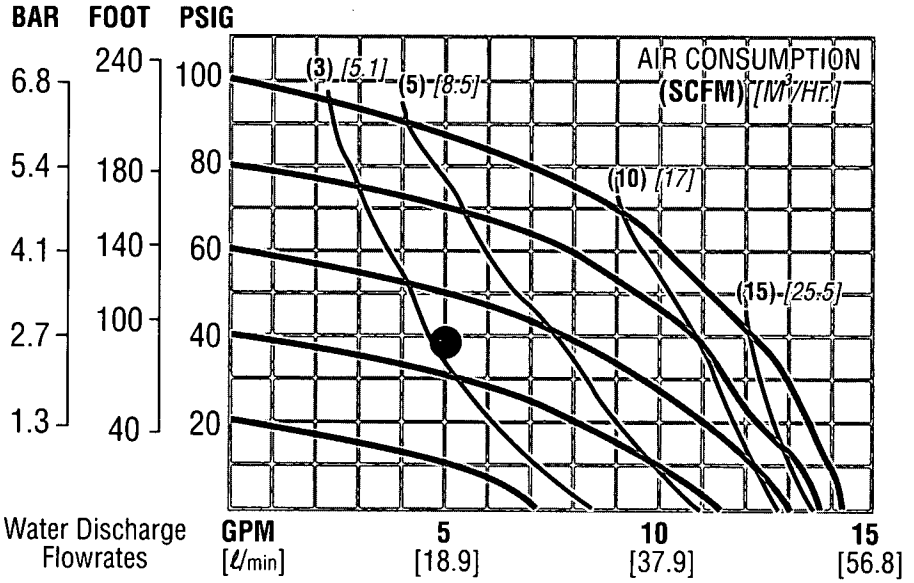

Volumes indicated on chart were determined by actually pumping water in calibrated tanks.

SECTION 2D — MODEL M1 CHAMP (Teflon®-Fitted) Pump Performance Curve

Weight .....PVDF 10.75 lbs.
Polypropylene 9.25 lbs.
Teflon® PFA 11.6 lbs.
Air Inlet .....¼" Female NPT
Inlet.....½" Female NPT
Outlet .....½" Female NPT
Suction Lift.....**7' Dry**[1]
25' Wet
Displacement per stroke..... .015 gal.[2]
Lube-free .021 gal.[2]
Solenoid-operated .011 gal.[2]
Max. Size Solids .....1/16" Dia.

Example: To pump 5 gpm against a discharge pressure of 40 psig requires 52 psig and 3.7 scfm air consumption. (See dot on chart.)

[1]M1 pumps with wetted construction of Teflon® and Teflon® valve seats have a dry suction lift of 6'.

[2]Displacement per stroke calculated at 70 psig air inlet against 30 psig discharge head pressure.

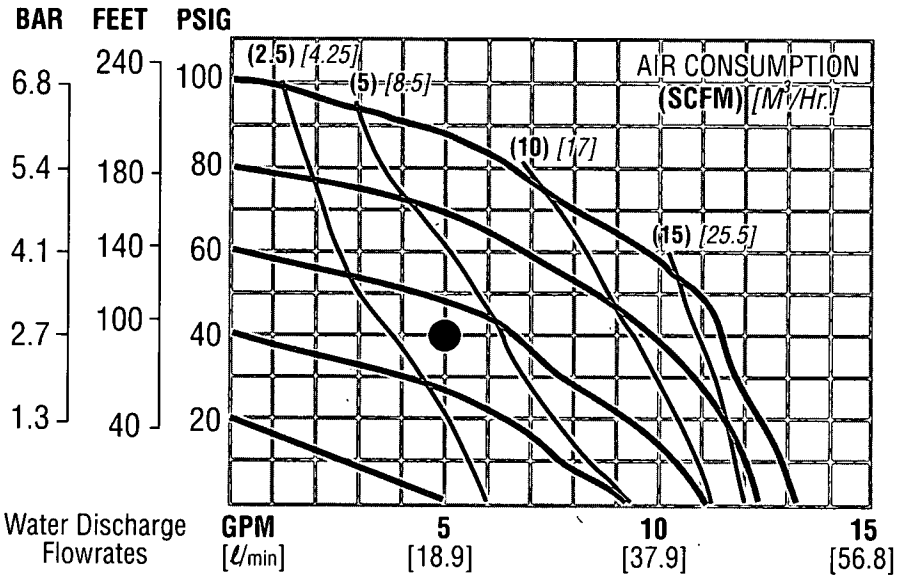

Volumes indicated on chart were determined by actually pumping water in calibrated tanks.

SECTION 3A

INSTALLATION — M1 AIR-OPERATED PUMPS

The Model M1 has a 1/2" inlet and 1/2" outlet and is designed for flows to 14 gpm. The **M1 Metal** pump is manufactured with wetted parts of aluminum or stainless steel. The center section of the **M1 Metal** pump is of nylon construction. The **M1 Champ** pump is manufactured with wetted parts of PVDF, polypropylene, graphite-filled polypropylene, or Teflon® PFA. The center section of the **M1 Champ** is constructed of polypropylene or graphite-filled polypropylene. Two types of air distribution systems are available: *LUBED AND LUBE-FREE.* The Lubed air distribution system consists of a brass air valve body, aluminum air valve piston, Buna-N O-rings and a bronze center section bushing. The LUBE-FREE air distribution system is constructed solely of high-tech, engineered thermoplastics which function together without lubrication. The encircled letters "LF" stamped on the top of the pump's center section denotes that the pump is LUBE-FREE. The lube-free air valve body is off-white in color and also has "LF" molded into the valve body. A variety of diaphragms, valve balls, valve seats, and O-rings are available to satisfy temperature, chemical compatibility, abrasion and flex concerns.

The suction pipe size should be at least 1/2" diameter or larger if highly viscous material is being pumped. The suction hose must be non-collapsible, reinforced type as the M1 is capable of pulling a high vacuum. Discharge piping should be at least 1/2"; larger diameter can be used to reduce friction losses. It is critical that all fittings and connections are airtight or a reduction or loss of pump suction capability will result.

The M1 can be used in submersible applications only when both wetted and non-wetted portions are compatible with the material being pumped. If the pump is to be used in a submersible application, a hose should be attached to the pump's air exhaust and the exhaust air piped above the liquid level.

If the pump is to be used in a self-priming application, be sure that all connections are airtight and that the suction lift is within the pump's ability. Note: Materials of construction and elastomer material have an effect on suction lift parameters. Please consult Wilden distributor's for specifics.

Pumps in service with a positive suction head are most efficient when inlet pressure is limited to 7–10 psig. Premature diaphragm failure may occur if positive suction is 11 psig and higher.

THE MODEL M1 WILL PASS 1/16" SOLIDS. WHENEVER THE POSSIBILITY EXISTS THAT LARGER SOLID OBJECTS MAY BE SUCKED INTO THE PUMP, A STRAINER SHOULD BE USED ON THE SUCTION LINE.

CAUTION: DO NOT EXCEED 110 PSIG AIR SUPPLY PRESSURE.

BLOW OUT AIR LINE FOR 10 TO 20 SECONDS BEFORE ATTACHING TO PUMP TO MAKE SURE ALL PIPE LINE DEBRIS IS CLEAR.

SECTION 3B

INSTALLATION — M1 SOLENOID-OPERATED PUMPS

The solenoid-operated Model M1 has a ½" inlet and ½" outlet and is designed for flows to 8.5 gpm. This maximum flow rate was calculated at 550 strokes per minute with 100 psig air inlet against 0 psig discharge head. The **M1 Champ** pump is manufactured with wetted parts of pure, unpigmented PVDF, polypropylene or Teflon® PFA. The center section of the **M1 Champ** is constructed of polypropylene. The **M1 Metal** pump is manufactured with wetted parts of aluminum or 316 stainless steel. The center section of the **M1 Metal** pump is of nylon construction. A variety of diaphragms, valve balls, and O-rings are available to satisfy temperature, chemical compatibility, abrasion and flex concerns.

In the solenoid-operated pump models, the standard air valve is replaced with a two position, four-way solenoid valve that has a single operator and spring return. The valve is internally air piloted for longer coil and operator life.

When the solenoid is unpowered, one air chamber is pressurized with air, while the opposite chamber is exhausted. When electric power is applied, the solenoid shifts, and the pressurized air chamber is exhausted while the opposite chamber is pressurized. By alternately applying and removing power, the solenoid-operated pump runs like a standard Wilden pump.

The speed of the pump is controlled electrically. Since each stroke is controlled by an electrical signal, the pump is ideal for batching and other electrically controlled dispensing applications.

Although the speed of the pump is controlled electrically, the air pressure is important. Air pressure displaces the fluid, and if the pressure is insufficient to complete the physical stroke before an electronic impulse signals the pump to shift, the stroke will not be completed, and the displacement per stroke will be reduced. This does not harm the unit in any way, but it may cause inaccuracy when attempting to batch specific quantities with high precision if this effect is not taken into account.

The suction pipe size should be at least ½" diameter or larger if highly viscous material is being pumped. The suction hose must be non-collapsible, reinforced type as the M1 is capable of pulling a high vacuum. Discharge piping should be at least ½"; larger diameter can be used to reduce friction losses. It is critical that all fittings and connections are airtight or a reduction or loss of pump suction capability will result.

All wiring used to operate the pump should be placed and connected according to the proper electrical codes. It is

important that the wiring is of adequate gauge to carry the current required to operate the pump. In addition, it is necessary that the electrical power supply is large enough to supply the current required to operate the pump. Wiring should be above ground level if possible (in case of fluid spill or leakage), and all wiring and connections which could become wet or damp should be made watertight.

If the pump is to be used in a self-priming application, be sure that all connections are airtight and that the suction lift is within the pump's ability. Note: Materials of construction and elastomer material have an effect on suction lift parameters. Please consult authorized Wilden distributors for specifics.

Pumps in service with a positive suction head are most efficient when inlet pressure is limited to 7–10 psig. Premature diaphragm failure may occur if positive suction head is 11 psig and higher.

The solenoid valve is rated for continuous duty; however, stopping on an even number stroke count insures that the electrical power is off when pump is stopped. This practice is safer and also eliminates unwanted strokes when the system is shut down and electrical power is off.

THE MODEL M1 WILL PASS 1/16" SOLIDS. WHENEVER THE POSSIBILITY EXISTS THAT LARGER SOLID OBJECTS MAY BE SUCKED INTO THE PUMP, A STRAINER SHOULD BE USED ON THE SUCTION LINE.

CAUTION: DO NOT EXCEED 110 PSIG AIR SUPPLY PRESSURE.

BLOW OUT AIR LINE FOR 10 TO 20 SECONDS BEFORE ATTACHING TO PUMP TO MAKE SURE ALL PIPE LINE DEBRIS IS CLEAR.

WARNING: The solenoid valve should not be used in an area where explosion proof equipment is required.

There are two coil options available. One coil allows for 24V DC operation while the other coil option allows for operation with either 12V DC or 24V AC at 60 Hz.

SOLENOID ELECTRICAL INFO:

PART NO.	AC VOLTS +/-10%	CURRENT (AMP) INRUSH	CURRENT (AMP) HOLDING	RESISTIVITY OHMS
00-2110-99	22/50 24/60	.445	.34	26
	DC VOLTS			
00-2110-99	12V DC	.445	.445	26
00-2120-99	24V DC	.25	.25	96

ELECTRICAL CONNECTIONS

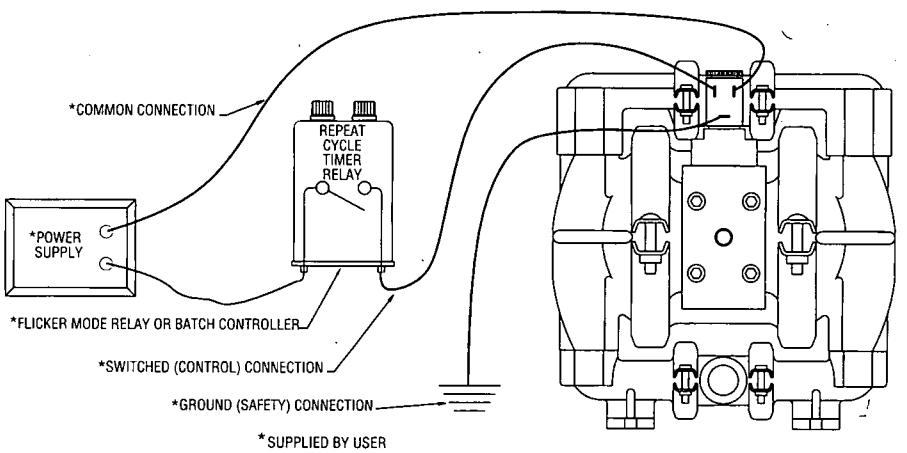

PLUMBING CONNECTIONS

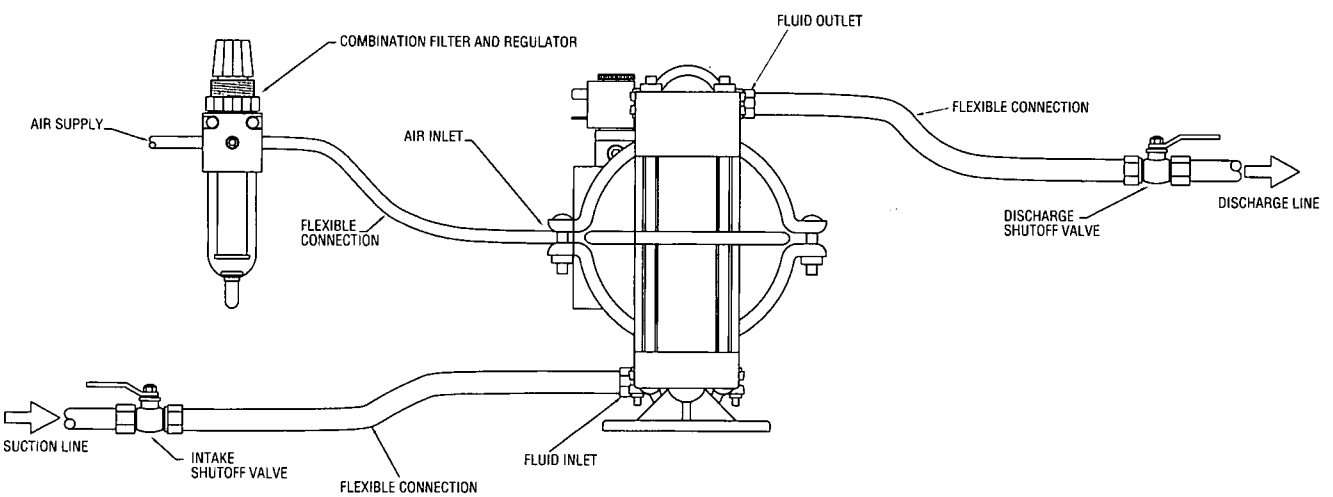

SECTION 3C

INSTALLATION — MODEL M1 ULTRAPURE II AND III

The M1 Ultrapure III was engineered in response to your request for a reliable, lube-free, sealless pump constructed of the purest materials available to industry. This ½" pump is constructed of Teflon PFA® wetted parts, Teflon PTFE® diaphragms, and Chemraz® O-rings. A specially engineered WIL-SEAL O-ring configuration, combined with "wrap-around" clamp bands apply uniform pressure to all sealing surfaces. The LUBE-FREE air valve constructed solely of plastic composites in conjunction with a newly designed center section, enhances reliability and pump performance. These selected plastic composites have the ability to function together without lubrication, which reduces contamination and fugitive emissions via the air exhaust port.

The Ultrapure II utilizes Teflon® encapsulated Viton O-rings and is available with a lubed air distribution system.

The suction pipe size should be at least ½" diameter or larger if highly viscous material is being pumped. The suction hose must be non-collapsible, reinforced type as the M1 is capable of pulling a high vacuum. Discharge piping should be at least ½"; larger diameter can be used to reduce friction losses. It is critical that all fittings and connections are airtight or a reduction or loss of pump suction capability will result.

The M1 can be used in submersible applications only when both wetted and non-wetted portions are compatible with the material being pumped. If the pump is to be used in a submersible application, a hose should be attached to the pump's air exhaust and the exhaust air piped above the liquid level.

If the pump is to be used in a self-priming application, be sure that all connections are airtight and that the suction lift is within the pump's ability. The M1 Ultrapure III has a dry suction lift of 6 feet.

Pumps in service with a positive suction head are most efficient when inlet pressure is limited to 7–10 psig. Premature diaphragm failure may occur if positive suction is 11 psig and higher.

THE MODEL M1 WILL PASS 1/16" SOLIDS. WHENEVER THE POSSIBILITY EXISTS THAT LARGER SOLID OBJECTS MAY BE SUCKED INTO THE PUMP, A STRAINER SHOULD BE USED ON THE SUCTION LINE.

CAUTION: DO NOT EXCEED 110 PSIG AIR SUPPLY PRESSURE.

BLOW OUT AIR LINE FOR 10 TO 20 SECONDS BEFORE ATTACHING TO PUMP TO MAKE SURE ALL PIPE LINE DEBRIS IS CLEAR.

TEMPERATURE LIMITS: +40°F to +300°F (4.4°C to 148.9°C)

SECTION 4A

SUGGESTED OPERATION AND MAINTENANCE INSTRUCTIONS — AIR-OPERATED M1 PUMPS

INSTALLATION: Months of careful planning, study, and selection efforts can result in unsatisfactory pump performance if installation details are left to chance.

Premature failure and long term dissatisfaction can be avoided if reasonable care is exercised throughout the installation process.

LOCATION: Noise, safety, and other logistical factors usually dictate that "utility" equipment be situated away from the production floor. Multiple installations with conflicting requirements can result in congestion of utility areas, leaving few choices for siting of additional pumps.

Within the framework of these and other existing conditions, every pump should be located in such a way that four key factors are balanced against each other to maximum advantage.

1. ACCESS: First of all, the location should be accessible. If it's easy to reach the pump, maintenance personnel will have an easier time carrying out routine inspections and adjustments. Should major repairs become necessary, ease of access can play a key role in speeding the repair process and reducing total downtime.

2. AIR SUPPLY: Every pump location should have an air line large enough to supply the volume of air necessary to achieve the desired pumping rate (see pump performance chart). Use air pressure up to a maximum of 110 psi depending upon pumping requirements.The use of an air filter before the pump will insure that the majority of any pipeline contaminants will be eliminated.

FOR LUBED PUMPS: For best results, the pumps should use an air filter, regulator, and lubricator system. The use of a lubricant, suitable for the application, helps perform a number of functions. Lubricants reduce friction to minimize required shifting forces and reduce wear. Lubricants provide a protective coating against some forms of corrosion and contaminants. **Wilden suggests a hydraulic oil with arctic characteristics (ISO 15-5Wt.) This oil is chemically compatible with the center block O-rings and has a low pour point to guard against problems associated with low temperatures.** The amount of lubrication required is directly related to the amount of oil introduced from the factory air system. We therefore suggest that the lowest setting on the lubricator be utilized and then increased as necessary.

FOR LUBE-FREE PUMPS: Lube-free pump models do not require lubrication during assembly or while in operation. Pump discharge rate can be controlled by limiting the volume and/or pressure of the air supply to the pump (preferred method). The use of a needle valve installed at the air inlet to the pump is suggested for this purpose. Pump discharge rate can also be controlled by throttling the pump discharge by installing a valve in the discharge line of the pump when the need to control the pump from a remote location exists. When the pump discharge pressure equals or exceeds the air supply pressure, the pump will stall out; no bypass or pressure relief valve is needed, and pump damage will not occur. When operation is controlled by a solenoid valve in the air line, a three-way valve should be used. Pumping volume can be set by counting the number of strokes per minute.

A muffler installed on the pump's air exhaust will give quiet exhaust. Sound levels are reduced below OSHA specifications using a Wilden muffler.

3. ELEVATION: Selecting a site that is well within the pump's dynamic lift capability will assure that loss-of-prime troubles will be eliminated. In addition, pump efficiency can be adversely affected if proper attention is not given to elevation (see pump performance chart).

4. PIPING: Final determination of the pump site should not be made until the piping problems of each possible location have been evaluated. The impact of current and future installations should be considered ahead of time to make sure that inadvertent restrictions are not created for any remaining sites.

The best choice possible will be site involving the shortest and the straightest hook-up of suction and discharge piping. Unnecessary elbows, bends, and fittings should be avoided. Pipe sizes should be selected so as to keep friction losses within practical limits. All piping should be supported independently of the pump. In addition, it should line up without placing stress on the pump fittings.

Expansion joints can be installed to aid in absorbing the forces created by the natural reciprocating action of the pump. If the pump is to be bolted down to a solid foundation, a mounting pad placed between the pump and foundation will assist in minimizing pump vibration. Flexible connections between the pump and rigid piping will also assist in minimizing pump vibration. If quick-closing valves are installed at any point in the discharge system, or if pulsation within a system becomes a problem, a surge suppressor should be installed to protect the pump, piping and gauges from surges and water hammer.

When pumps are installed in applications involving flooded suction or suction head pressures, a gate valve should be installed in the suction line to permit closing of the line for pump service.

INSPECTIONS: Periodic inspections have been found to offer the best means for preventing unscheduled pump downtime.

Individuals responsible for checking and maintaining lubrication levels in the pumps should also check for any abnormal noise or leakage. Personnel familiar with the pumps' construction and service should be informed of any abnormalities that are detected.

RECORDS: When service is required, a record should be made of all necessary repairs and replacements. Over a period of time, such records can become a valuable tool for predicting and preventing future maintenance problems and unscheduled downtime. In addition, accurate records make it possible to identify pump that are poorly suited to their applications.

SECTION 4B

SUGGESTED OPERATION AND MAINTENANCE INSTRUCTIONS — SOLENOID-OPERATED M1 PUMPS

INSTALLATION: Months of careful planning, study, and selection efforts can result in unsatisfactory pump performance if installation details are left to chance.

Premature failure and long term dissatisfaction can be avoided if reasonable care is exercised throughout the installation process.

LOCATION: Noise, safety, and other logistical factors usually dictate that "utility" equipment be situated away from the production floor. Multiple installations with conflicting requirements can result in congestion of utility areas, leaving few choices for siting of additional pumps.

Within the framework of these and other existing conditions, every pump should be located in such a way that five key factors are balanced against each other to maximum advantage.

1. ACCESS: First of all, the location should be accessible. If it's easier to reach the pump, maintenance personnel will have an easier time carrying out routine inspections and adjustments. Should major repairs become necessary, ease of access can play a key role in speeding the repair process and reducing total downtime.

2. AIR SUPPLY: Every pump location should have an air line large enough to supply the volume of air necessary to achieve the desired pumping rate (see pump performance chart). Use air pressure up to a maximum of 110 psi depending upon pumping requirements.

For best results, the pumps should use an air filter and a regulator. The use of an air filter before the pump inlet will insure that the majority of pipeline contaminants will be eliminated. The solenoid operated pump is permanently lubricated during assembly, and requires no additional lubrication under normal operation. If the unit runs under extreme conditions (continuous operation at high speeds), it may be necessary to relubricate center block with a **buna compatible NLGI Grade 2 grease** every 50 million cycles. Continuous lubrication with a compatible oil is not harmful, and will provide longer seal life, but it may flush all grease out of the unit.

Pump discharge rate is controlled electrically by varying the rate of alternation of the stroke signals. The pump will continue to shift if the liquid discharge line is closed, however no media will be pumped. This will not harm the pump in any way, but it is wasteful of the pressurized air. The pump will not shift until the air inlet pressure exceeds the minimum supply pressure requirement of approximately 40 psig. A minimum of 45 psi is recommended to ensure reliable operation.

A muffler can be installed to reduce the amount of noise generated by the pump. Use of the specified Wilden muffler will reduce noise levels below OSHA specifications.

3. ELEVATION: Selecting a site that is well within the pump's dynamic lift capability will assure that loss-of-prime troubles will be eliminated. In addition, pump efficiency can be adversely affected if proper attention is not given to elevation (see pump performance chart).

4. PIPING: Final determination of the pump site should not be made until the piping problems of each possible location have been evaluated. The impact of current and future installations should be considered ahead of time to make sure that inadvertent restrictions are not created for any remaining sites.

The best choice possible will be a site involving the shortest and the straightest hook-up of suction and discharge piping. Unnecessary elbows, bends, and fittings should be avoided. Pipe sizes should be selected so as to keep friction losses within practical limits. All piping should be supported independently of the pump. In addition, it should line up without placing stress on the pump fittings.

Expansion joints can be installed to aid in absorbing the forces created by the natural reciprocating action of the pump. If the pump is to be bolted down to a solid foundation, a mounting pad placed between the pump and foundation will assist in minimizing pump vibration. Flexible connections between the pump and rigid piping will also assist in minimizing pump vibration. If quick-closing valves are installed at any point in the discharge system, or if pulsation within a system becomes a problem, a surge suppressor should be installed to protect the pump, piping and gauges from surges and water hammer.

When pumps are installed in applications involving flooded suction or suction head pressures, a gate valve should be installed in the suction line to permit closing of the line for pump service.

INSPECTIONS: Periodic inspections have been found to offer the best means for preventing unscheduled pump downtime.

Individuals responsible for checking and maintaining lubrication levels in the pumps should also check for any abnormal noise or leakage. Personnel familiar with the pumps' construction and service should be informed of any abnormalities that are detected.

RECORDS: When service is required, a record should be made of all necessary repairs and replacements. Over a period of time, such records can become a valuable tool for predicting and preventing future maintenance problems and unscheduled downtime. In addition, accurate records make it possible to identify pumps that are poorly suited to their applications.

SECTION 5A

TROUBLESHOOTING — AIR-OPERATED M1 PUMPS

Pump will not run or runs slowly.

1. Check air inlet screen and air filter for debris.
2. Check for sticking air valve, flush air valve in solvent.
3. Check for worn out air valve. If piston face in air valve is shiny instead of dull, air valve is probably worn beyond working tolerances and must be rebuilt by Wilden or replaced.
4. Check center block O-rings. If worn excessively, they will not seal and air will simply flow through pump and out air exhaust. Use only Wilden O-rings as they are of special construction and ISO 15-wt oil with arctic characteristics.
5. Check for rotating piston in air valve.
6. Check for over-torquing of air valve (lube-free only). Over-torquing may cause air valve piston to stick.

Pump runs but little or no product flows.

1. Check for pump cavitation; slow pump speed down to match thickness of material being pumped.
2. Check for sticking ball checks. If material being pumped is not compatible with pump elastomers, swelling may occur. Replace ball checks and seal with proper elastomers.
3. Check to make sure all suction connections are air tight, especially clamp bands around intake balls.

Pump air valves freezes.

Check for excessive moisture in compressed air. Either install dryer or hot air generator for compressed air.

Air bubbles in pump discharge.

1. Check for ruptured diaphragm.
2. Check tightness of clamp bands, especially at intake manifold.

Product comes out air exhaust.

1. Check for diaphragm rupture.
2. Check tightness of piston plates to shaft.

SECTION 5B

TROUBLESHOOTING — SOLENOID-OPERATED M1 PUMPS

Pump will not run.

1. Check for pressurized air at the inlet. (Min. 45 psig.)
2. Check air inlet and filter for debris.
3. Connect a test lamp to the two wires which run to pump and ensure that the lamp cycles on and off.
4. Make sure that the air valve manual override (small red knob on front of valve) is switched to the "0" position.
5. Check pilot pressure vent at the top of the operator/coil assembly to ensure that it is not clogged.
6. Check for a worn out air valve. If air continually blows out the exhaust in very large quantities, the air valve seals may be worn beyond their ability to function. In this case, the valve must be replaced.

NOTE: Before the valve is scrapped, it is possible that it may be saved by completely disassembling the valve, cleaning all components and relubricating the valve.

Pump runs but little or no fluid comes out.

1. Check that the discharge isolation valve is not closed.
2. Check that the electronic signal is slow enough that the pump is able to complete each physical stroke before it is signaled to change direction. The time required to complete the stroke is determined by a variety of factors which include fluid viscosity and head pressure. The shaft can be viewed if the muffler is removed to verify that the pump is stroking.
3. Check for pump cavitation; slow pump speed down to match the thickness of the material being pumped.
4. Check for sticking ball check valves. If the material being pumped is not compatible with the pump elastomers, swelling may occur. Replace ball check valves and O-ring with the proper elastomers.
5. Check to make sure that all suction connections are air tight, and that the clamp bands are properly tightened.

Pump air passages blocked with ice.

Check for excessive moisture in compressed air line. As the air expands out the exhaust during the operation of the pump, water vapor entrapped in the compressed air can freeze and block the air passageways in the pump. If this occurs, it may be necessary to install a coalescing filter, an air dryer, or a hot air generator for the compressed air.

Air bubbles in pump discharge.

1. Check for ruptured diaphragm.
2. Check tightness of clamp bands, and the integrity of the O-rings, especially at intake manifold.

Product comes out of the air exhaust.

1. Check for diaphragm rupture.
2. Check tightness of piston plates to shaft.

MAINTENANCE RECORD

DATE	SERVICE RENDERED	SERVICED BY

SECTION 6A

DIRECTIONS FOR DISASSEMBLY/REASSEMBLY
AIR-OPERATED AND SOLENOID-OPERATED M1 METAL AND M1 CHAMP (PLASTIC)

CAUTION: Before any maintenance or repair is attempted, the compressed air line to the pump should be disconnected and all air pressure allowed to bleed from pump. Disconnect all intake, discharge, and air lines. Drain the pump by turning it upside down and allowing any fluid to flow into a suitable container.

The Wilden® M1 has a 1/2" inlet and a 1/2" outlet and is designed for flows up to 14 gpm. The single-piece center section, consisting of center block and air chambers, is molded from glass-filled polypropylene on the Champ, or nylon on the Metal pump. All fasteners and hardware are stainless steel and the air valve is manufactured of brass or high-tech, engineered thermoplastics. All O-rings used in the pump are of a special material and shore hardness which should only be replaced with factory-supplied parts.

Tools required to perform maintenance on the Model M1 pumps are 3/16 inch Allen wrench, 7/16 inch, 5/16 inch, and 3/8 inch wrenches, two open end adjustable wrenches, and an O-ring pick.

PLEASE read all directions before starting disassembly.

NOTE: The following directions for disassembly and reassembly pertain to both metal and plastic constructed Wilden pumps. There are a few differences which are discussed in the text.The procedures for the solenoid-operated M1 are the same except for the air distribution system.

DISASSEMBLY

Step 1.

Before actual disassembly is started, turn pump upside down and drain all liquid trapped in the pump into a suitable container. Be sure to use proper caution if liquid is corrosive or toxic. Mark each liquid chamber to its respective air chamber for easy alignment during reassembly.

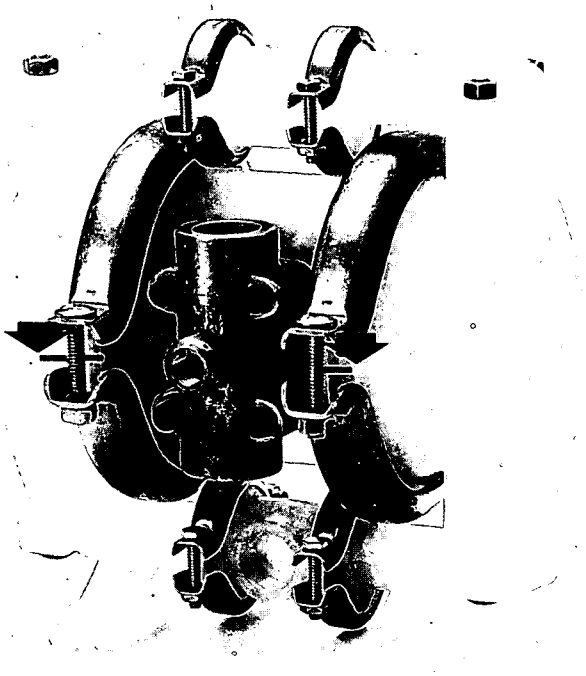

Figure 1

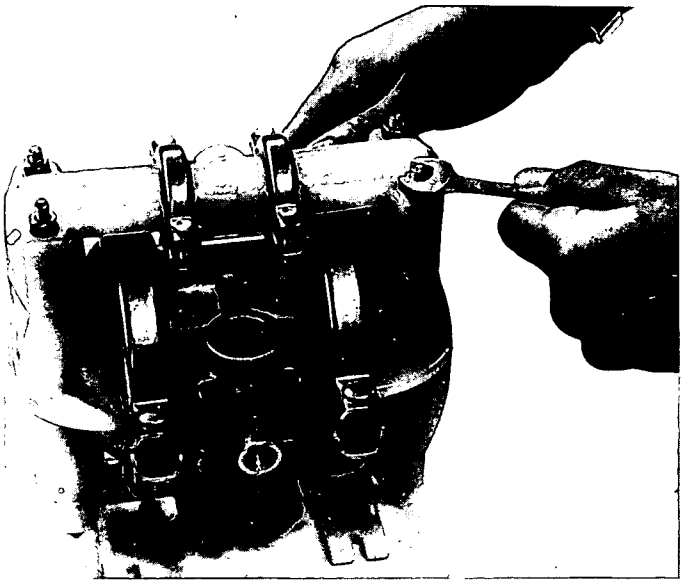

Figure 2

Start by removing the nuts from the four long bolts that hold the top and bottom manifold to the center section.

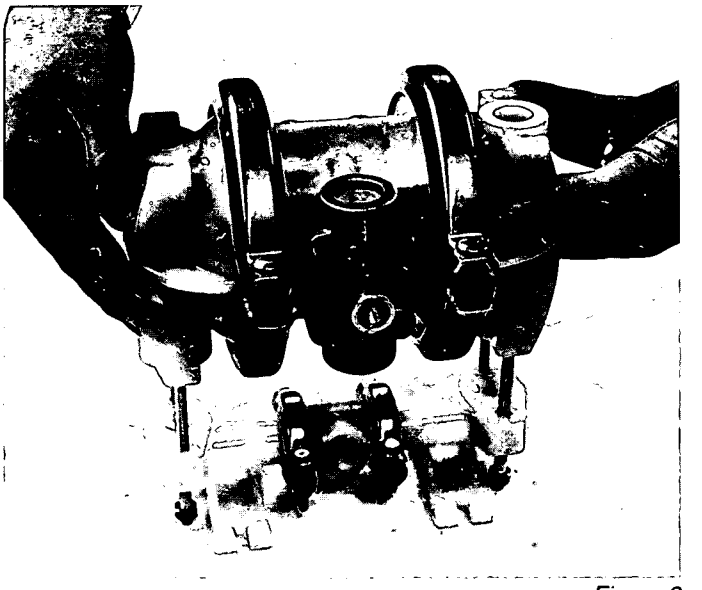

Figure 3

Remove the top manifold and lift the center section off the inlet manifold.

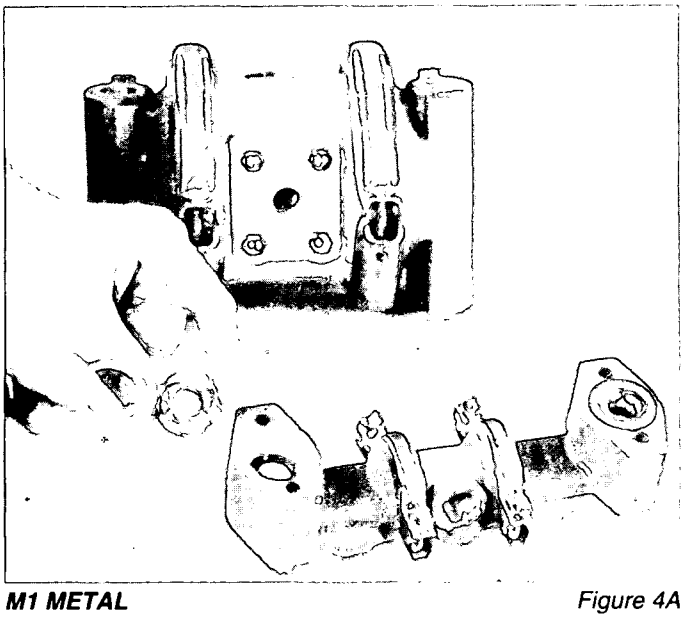

M1 METAL *Figure 4A*

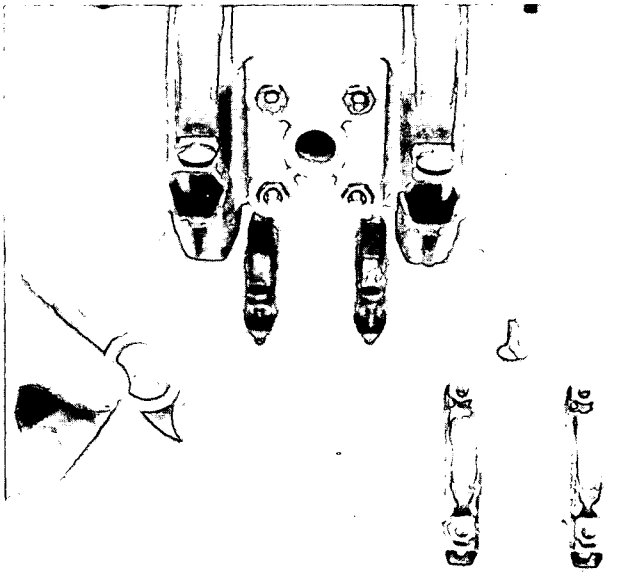

M1 PLASTIC *Figure 4B*

Step 2.

Set the center section aside and inspect the discharge manifold. The discharge valve ball, seat, and sealing O-rings should now be inspected for wear and chemical attack. If the ball is round and not deeply scratched, it is still serviceable. Inspect the seat area where the ball valve rests. It should be smooth with no cuts. If this area is damaged, poor vacuum will result.

METAL PUMPS are constructed with a single valve seat O-ring configuration. Solid Teflon® PTFE O-rings are utilized when pump is Teflon®-fitted. These Teflon® O-rings should be replaced when reassembled. *(Figure 4A.)*

PLASTIC PUMPS are constructed with a double valve seat O-ring configuration. Teflon® encapsulated O-rings are utiilized when pump is Teflon®-fitted. These O-rings may be reused. *(Figure 4B.)*

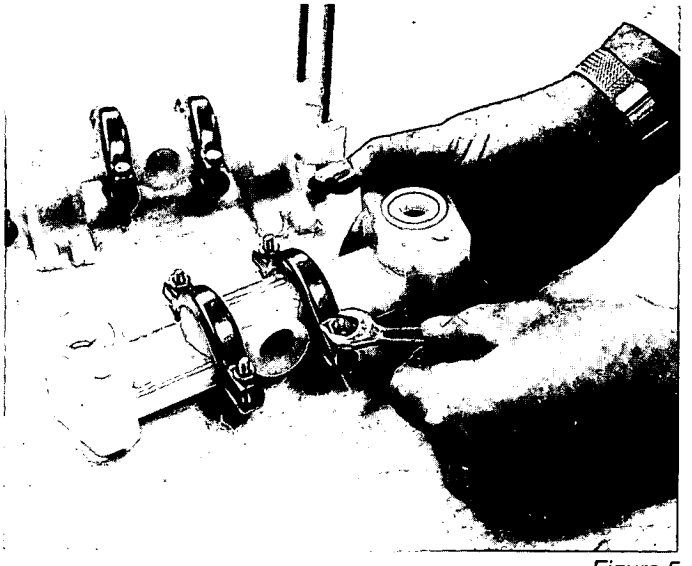

Figure 5

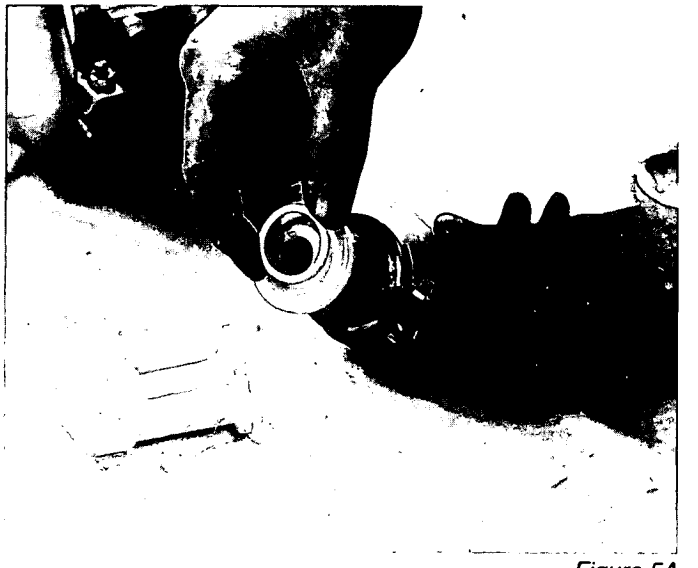

Figure 5A

Step 3.

Normally the inlet or discharge manifold should not be disassembled during pump maintenance or repair. However, if this is necessary, or if the angle of the discharge or inlet opening needs to be changed, the clamp bands should be completely removed and the band itself should be disassembled. Taking the bands apart is necessary to simplify manifold reassembly. Set the manifold and bands aside.

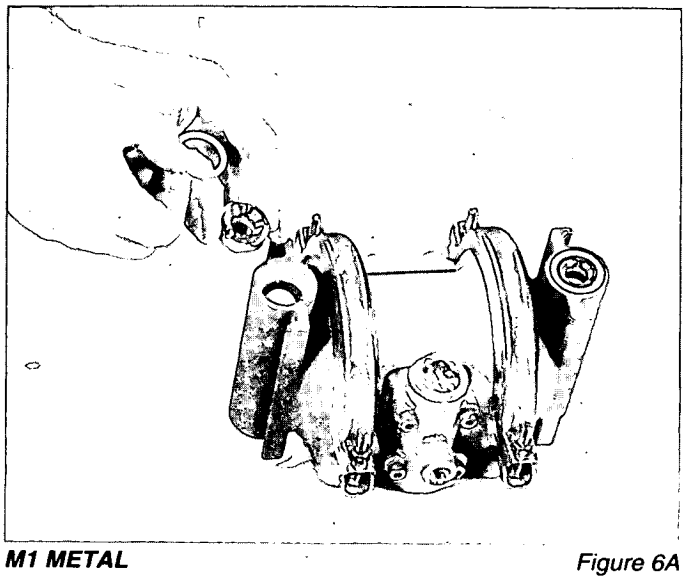

M1 METAL *Figure 6A*

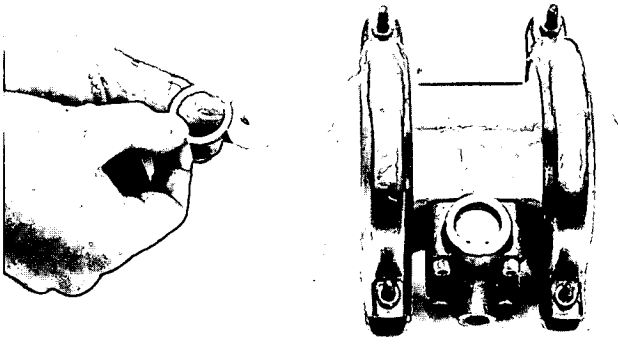

M1 PLASTIC *Figure 6B*

Step 4.

Turn the pump center section upside down and remove and inspect the inlet valve balls, seats, and sealing O-rings. If damage is apparent, or swelling or cracking of the valve balls is observed, these parts should be replaced upon pump reassembly.

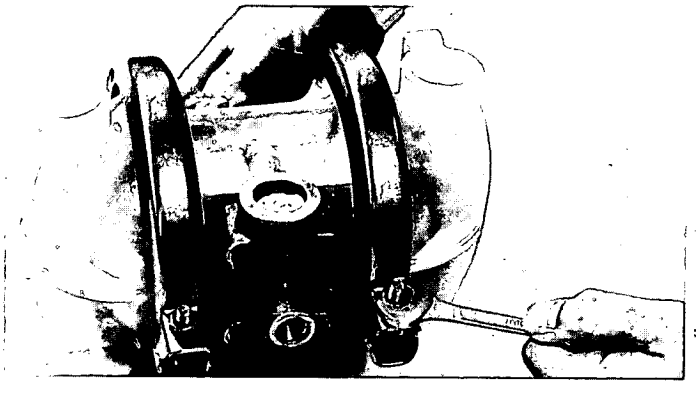

Figure 7

Use a 7/16-inch wrench to remove the clamp bands that hold the liquid chambers to the one-piece center section.

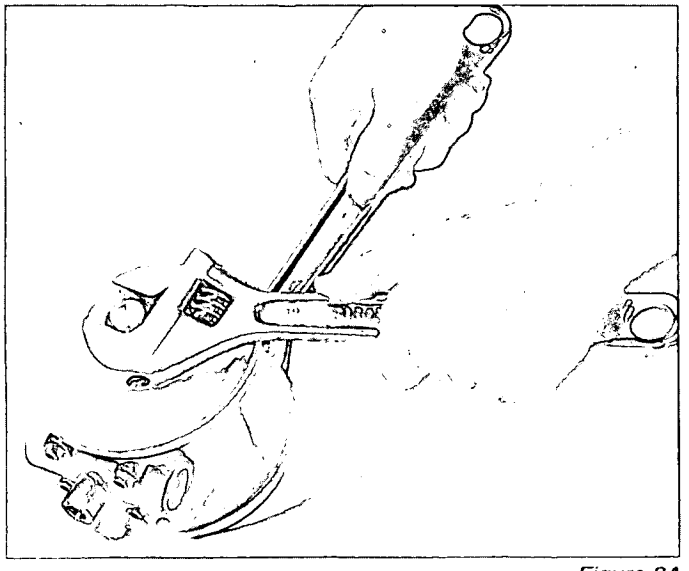

Figure 8A

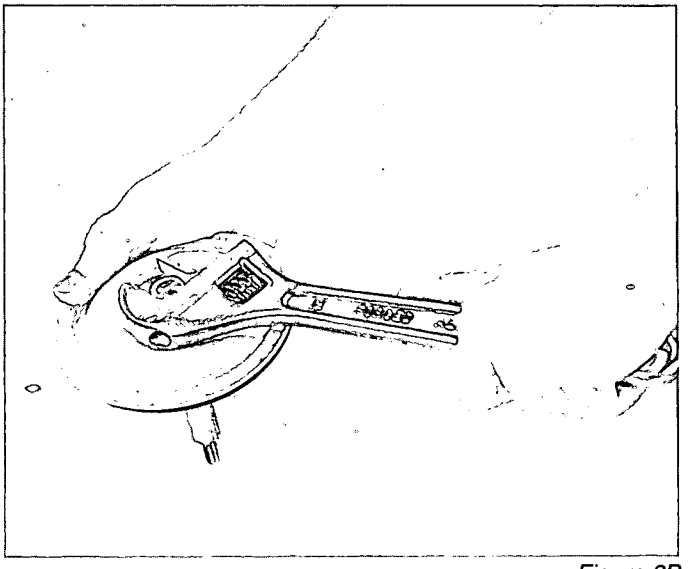

Figure 8B

Step 5.

Use the two adjustable wrenches to loosen the diaphragm piston plate from the connecting shaft. Only one piston plate will loosen. Remove it and the diaphragm. Remove the shaft and attached diaphragm from the center block. To remove the diaphragm from the shaft, hold the outer rim of the diaphragm and loosen the diaphragm piston plate with the adjustable wrench. If the plate will not loosen, the shaft must be placed in a vise. **Protect the shaft from damage by using wood blocks or soft jaws in the vise.** The plate can now be easily removed with the adjustable wrench.

At this point of disassembly, all wetted parts of the pump are available for inspection or repair.

If inspection, and/or servicing, of the non-wetted air section is necessary, please see Section 2.

REASSEMBLY

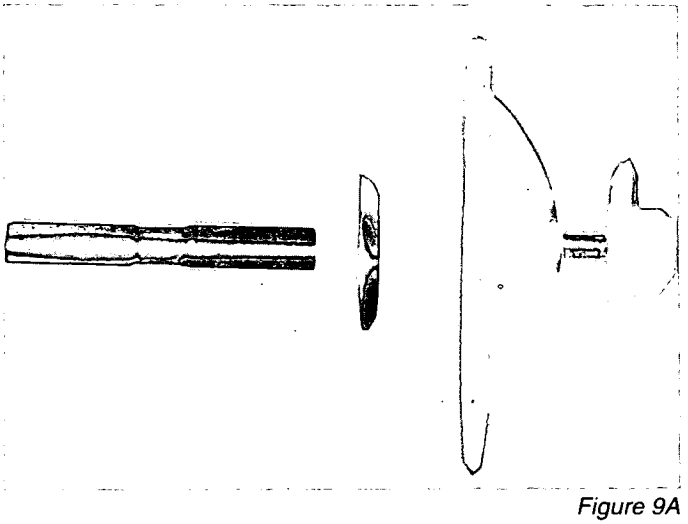

Figure 9A

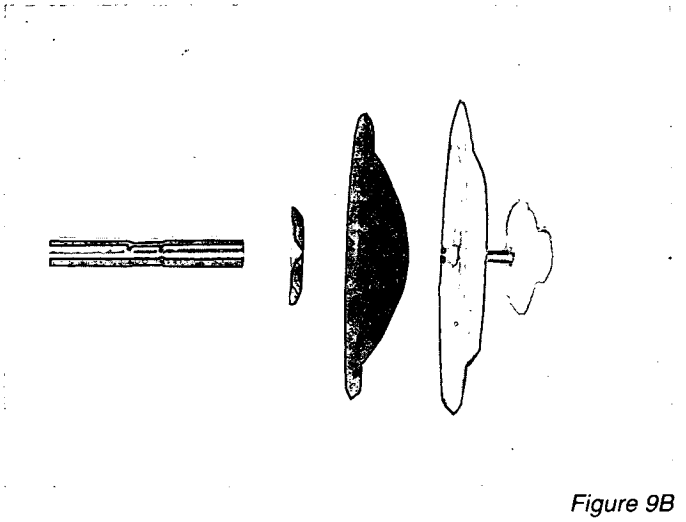

Figure 9B

Step 1.

First, install diaphragm and inner and outer piston on shaft. Observe **this side out** markings on diaphragm. Hand tighten only at this time, the outer piston to the shaft. Note: Pumps equipped with Teflon® diaphragms require that back-up diaphragm (P/N TF93B be used. See *Figure 9B*. O-rings and/or slipper seals may need to be replaced.

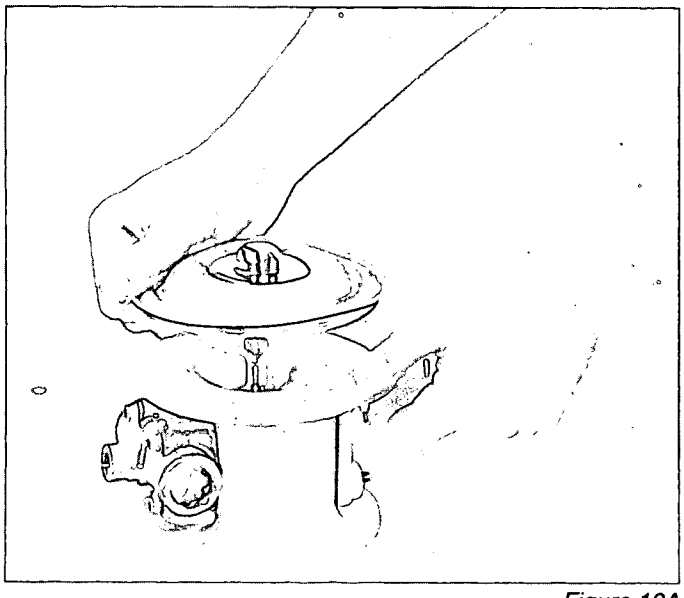

Figure 10A

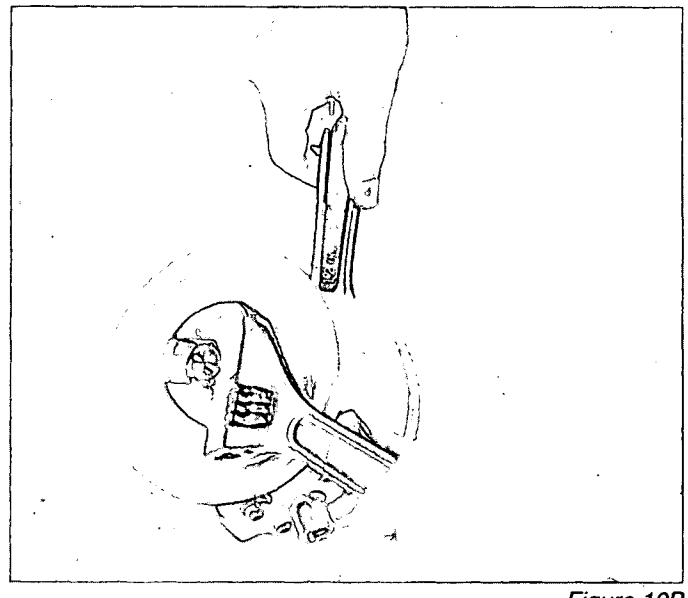

Figure 10B

Step 2.

Insert the shaft through the center block bushing. Install the opposite outer piston, diaphragm(s) and inner piston and tighten per the torque specifications* (Item #4). **NOTE:** For lubed models, Wilden suggests an oil with arctic characteristics (ISO 15-5 wt.) to lubricate bushing prior to inserting shaft. Lube-free models do not require any lubrication during assembly or while in operation.

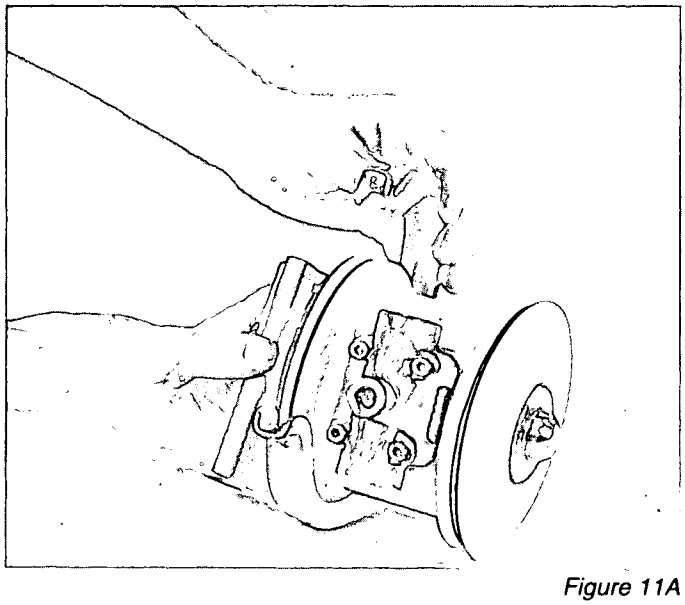

Figure 11A

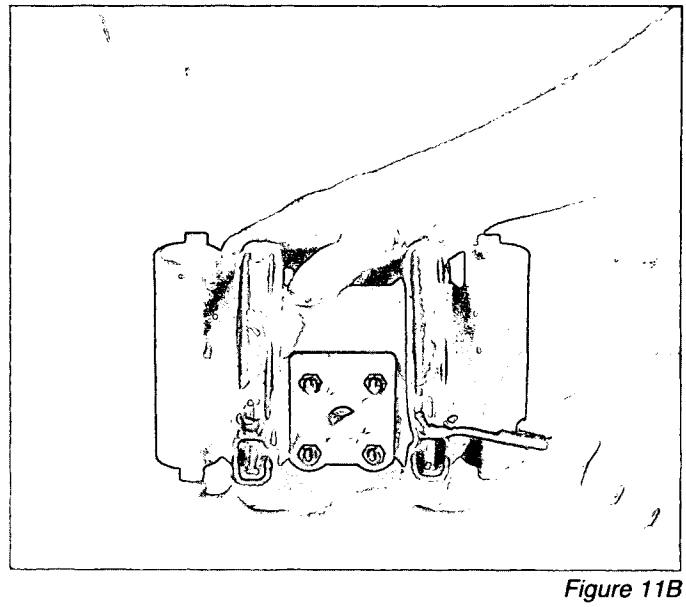

Figure 11B

St p 3.

Rubber/TPE Diaphragms. Locate one diaphragm so that its outer bead gently rests in the groove provided for it in the center section. Place the water chamber on the diaphragm using the alignment marks previously made during disassembly. Install and tighten the clamp band per the torque specifications* (Item #8 or #9).

Install the second water chamber as above. Note: It may be necessary to adjust the diaphragm position slightly so that the bead gently rests in its groove in the center section.

*Refer to page 43 for torque specifications.

Step 3A.

Teflon® Diaphragms. M1 Plastic Pumps fitted with Teflon® diaphragms require the use of a Teflon® gasket kit, P/N TF1GK. The Teflon® gasket material in this kit is an expanded type of Teflon® which is very strong but soft. Its use assures a positive seal between the Teflon® diaphragm outer bead and its corresponding groove in the water chamber. This gasket material should be replaced each time the pump is disassembled. No gasket material is needed in the assembly of metal pumps.

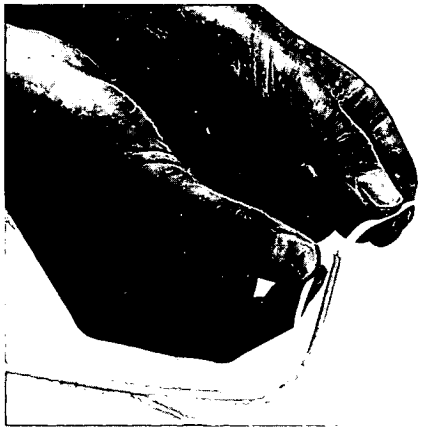

Figure 12A

Select a strip of 1/4" wide material approximately 15 inches in length and carefully remove the covering from the adhesive strip (see *Figure 12A).* Ensure that the adhesive remains attached to the gasket material.

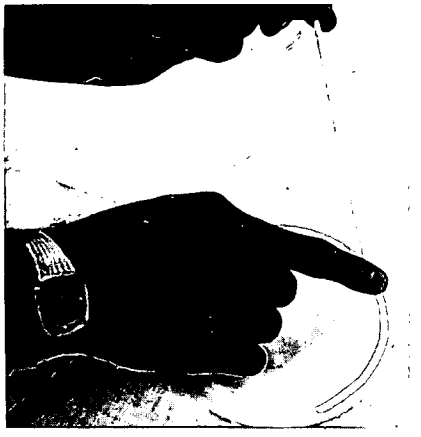

Figure 12B

Starting at any point, place the gasket strip in the center of the diaphragm bead groove on the water chamber and press lightly on the gasket to ensure that the adhesive holds it in place during assembly (see *Figure 12B).*

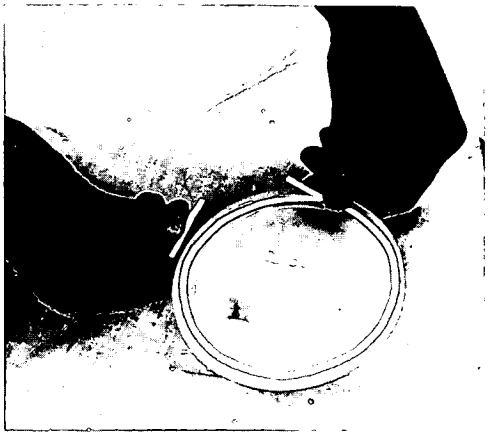

Figure 12C

The ends of the gasket strip should overlap approximately 1/2 inch (see *Figure 12C).*

After the gasket material is installed, proceed as in Step 3.

*Refer to page 43 for torque specifications.

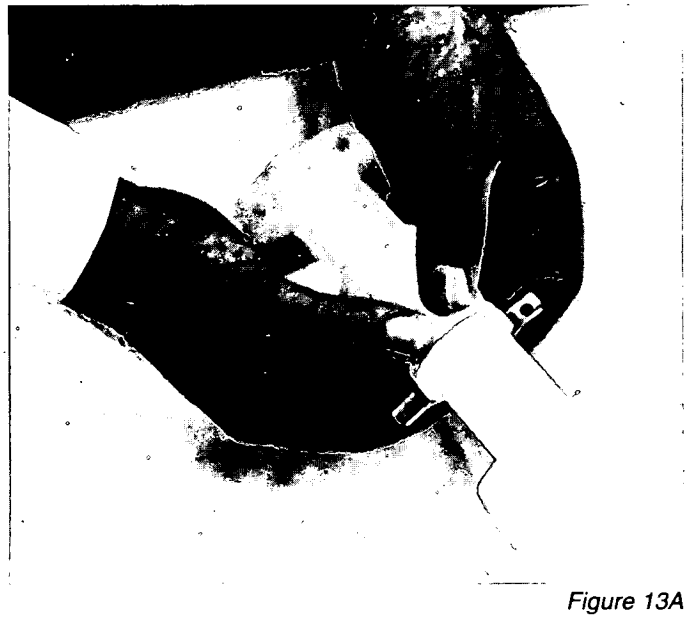

Figure 13A

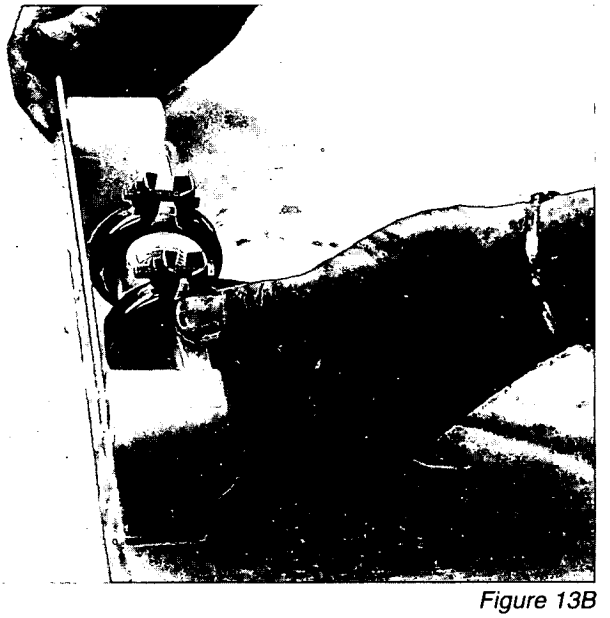

Figure 13B

Step 4.

Manifold Assembly. If the inlet and/or discharge manifold was taken apart, it should be reassembled now. The easiest way to do this is to take one half clamp band and wedge it onto the flanges of the elbow and center T-section. (See *Figure 13A).* This holds the two parts together while the second half band is installed and the bolts are hand-tightened. Attach the other elbow to the center T-section as above. Align the manifold parts as in *Figure 13B,* and tighten the clamps per the torque specifications* (Item #6). Note: All PVDF and Teflon® pumps fitted with Teflon® elastomers, utilize gasket material around the seat area as well. If sealing is a concern, the gasket material can be used with the polypropylene pumps as well.

Step 5.

If the pump is equipped with optional Teflon® diaphragms, valve balls, and sealing rings around the valve seats, new Teflon® gaskets must be installed. The small flange manifold connections of the M1 "Champ" PVDF and Teflon® pumps are sealed with a Teflon® O-ring and a circular gasket. The gaskets are held in place during assembly by two adhesive strips. After installing the valve balls, valve seats and O-rings in the bottom of each water chamber and discharge manifold elbow place a circular gasket in position. No gasket material is needed for metal construction.

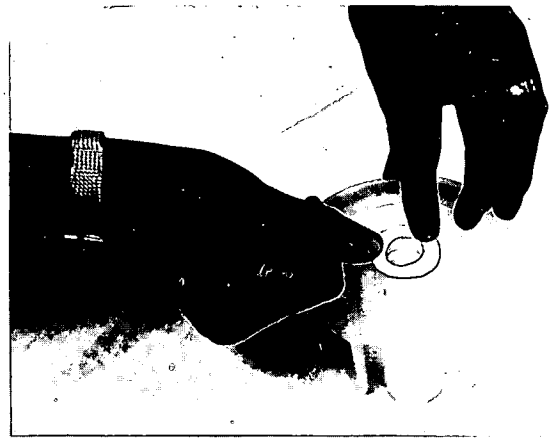

Figure 13B

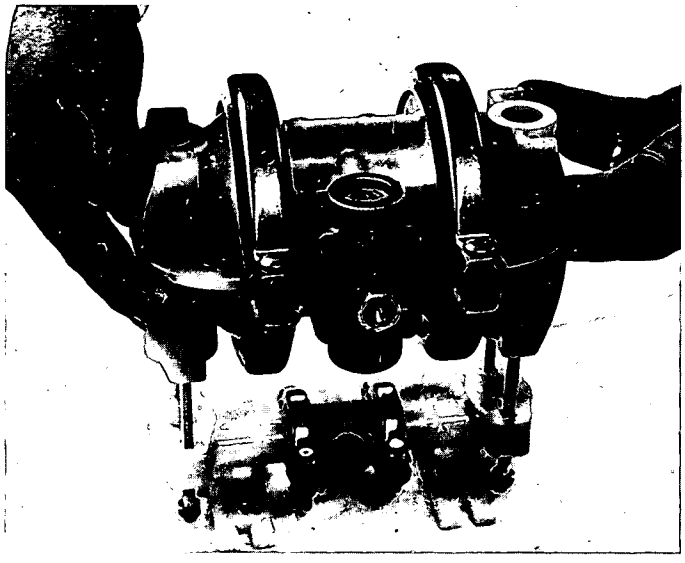

Figure 14A

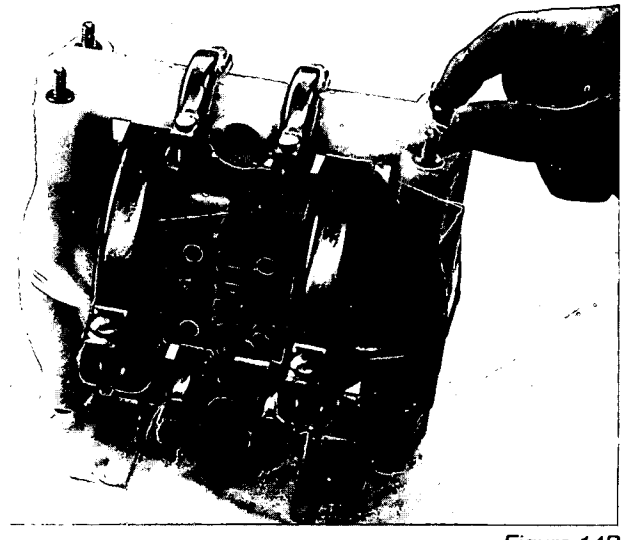

Figure 14B

Step 6.

Make sure the valve balls, valve seats, sealing O-rings, and Teflon® gaskets, if needed, are installed. Install the four long body bolts into the inlet manifold and place the main body of the pump onto the inlet housing. Place the discharge manifold on the center section. Put the washers and nuts on the bolts and tighten per the torque specifications (Item #10 or #11).

Step 7.

Retighten all clamp bands. When all maintenance and/or repairs are accomplished, an air line should be connected to the pump's air valve and the pump run dry. Be sure to blow out air line for 10 to 20 seconds before reinstalling pump in service. Good suction should be observed at the pump inlet. Approximately 10 inches of vacuum, should be observed with pumps fitted with rubber diaphragms and 7 inches with pumps fitted with Teflon® diaphragms. If pump does not operate or pull sufficient vacuum, refer to troubleshooting section.

*Refer to page 43 for torque specifications.

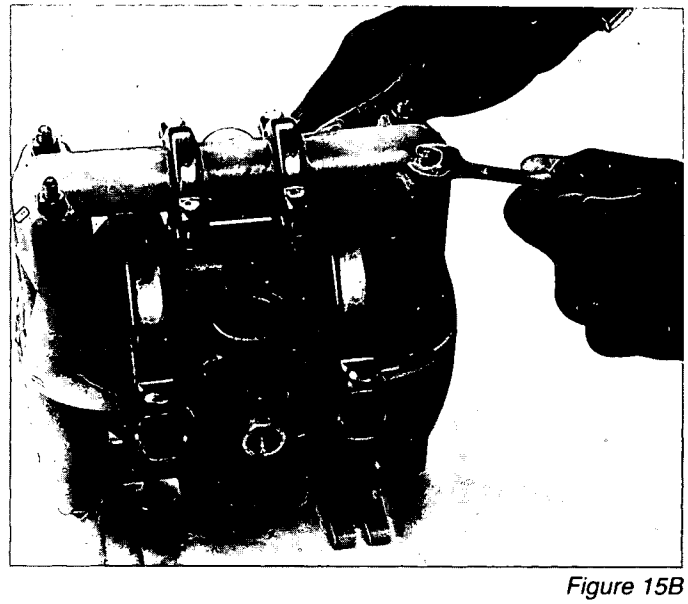

Figure 15B

LUBED PUMPS
AIR VALVE / CENTER SECTION REPAIR / MAINTENANCE

The center section assembly consists of both the air valve body and piston and the center section. The unique design of the air valve relies only on differential pressure to cause the air valve to shfit. It is reliable and simple to maintain. The bushing in the center block, along with the diaphragm shaft, provides the signal to tell the air valve to shift. The following procedure will ensure that the air valve on your Wilden pump will provide long trouble-free service.

AIR VALVE BODY AND PISTON ASSEMBLY AND DISASSEMBLY

The air valve body and piston (P/N 01-2000-07) can be disconnected from the pump by removing the four socket-head cap screws which attach it to the center section. The piston in the air valve is aluminum with a dark gray anodized coating. The piston should move freely and the ports in the piston should line up with the ports on the face of the air valve body. The piston should also appear to be a dull, dark gray color. If the piston appears to be a shiny aluminum color, the air valve is probably worn beyond working tolerances and should be replaced.

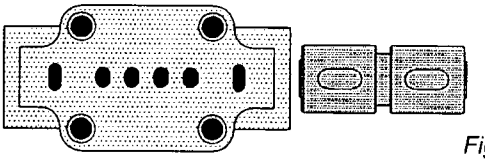

Figure A

If the piston does not move freely in the air valve, the entire air valve should be immersed in a cleaning solution. (NOTE: Do not force the piston by inserting a metal object.) This soaking should remove any accumulation of sludge and grit which is preventing the air valve piston from moving freely. If the air valve piston does not move freely after the above cleaning, the air valve should be disassembled as follows: Remove the snap ring from the top end of the air valve cylinder and apply an air jet to the 1/8-inch hole on the opposite end of the air valve face. **[CAUTION:** The air valve end cap (P/N 01-2350-23 may come out with considerable force.] Inspect the piston and cylinder bore for nicks and scoring.

Inspect the air valve side of the center section for flatness and to insure no nicks or other damage exists that would prevent the air valve from sealing when installed. Inspect the two channels and their ports to make sure they are clean and the ports are open to the bushing. The air valve will not shift if these ports are plugged or an O-ring is in the wrong groove of the center section closing off a port. Inspect the air valve gasket and muffler plate gasket and replace if damaged. **Attach the air valve to the center section and tighten per the torque specifications* (Item #1 or Item #2).**

O-RING REPLACEMENT/ CENTER SECTION

The pump's center section consists of a molded housing with a bronze bushing. (Bushing is not removable.) This bushing has grooves cut into the inside diameter. O-rings are installed in these grooves. When the O-rings become worn or flat, they will no longer seal and must be replaced. This is most easily accomplished by using a tool called an O-ring pick, available through most industrial supply companies.

There are two versions of center sections: PRE-ENHANCED and ENHANCED. An encircled letter "E" stamped on the top of the center section denotes the ENHANCED type center section *(Figure C).*

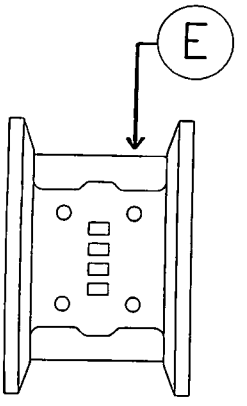

Figure C

If the encircled "E" is not present, a pre-enhanced shaft (101A) must be utilized. An enhanced (non-dented) shaft will not function correctly in the pre-enhanced center section. The center section O-rings (01-3200-52) must be installed in the appropriate grooves as shown (1, 3, 4, 6).

PRE-ENHANCED SHAFT PRE-ENHANCED CONFIGURATION

If the encircled "E" is present, an enhanced (01-4000-09) shaft should be utilized to maximize performance. The center section O-rings (01-3200-52) must be installed in the appropriate grooves as shown (1, 3, 6, 8).

ENHANCED SHAFT ENHANCED CONFIGURATION

LUBE-FREE PUMPS
AIR VALVE / CENTER SECTION REPAIR / MAINTENANCE

AIR VALVE/CENTER SECTION REPAIR/MAINTENANCE

The center section assembly consists of both the air valve body and piston, and the center section. The lube-free design utilizes high-tech, engineered thermoplastics in place of the brass air valve, aluminum piston, and bronze bushing. This new system also includes slipper seals to reduce the coefficient of friction between the shaft and center section. This lube-free design includes the straight shaft and altered exhaust port configuration utilized in the enhanced M1 air distribution system. Low start-up pressure, on/off reliability, and increased sealing in a dead-head condition are a few of the advantages of the lube-free air distribution system. The selected thermoplastics have the ability to function together without lubrication making the M1 Wilden pump truly lube-free. ***The M1 lube-free pumps are not pre-lubed with oil or grease.***

AIR VALVE BODY AND PISTON ASSEMBLY AND DISASSEMBLY

The air valve body and piston (P/N 01-2000-65-200) is externally serviceable by removing the four socket-head cap screws which attach it to the center section. The lube-free air valve body is off-white in color and has an encircled "LF" molded into the exterior. The thermoplastic air valve piston is gray in color like the aluminum lubed style, but is differentiated by a "D-shaped hole" in the top of the piston, and two small holes in the annular groove. (See *Figure B.)*

The piston should move freely and the ports in the piston must line-up with the ports on the face of the air valve body (see *Figure B).* If the piston does not move freely in the valve body, the entire air valve assembly should be immersed in a mild soap solution to remove any accumulation of sludge and/or grit. If the air valve does not move freely after the above cleaning, the air valve should be disassembled as follows: Remove the snap ring from the top of the air valve cylinder and apply an air jet to the 1/8" hole on the opposite end of the air valve face. Caution: The end cap may come out with considerable force. Verify that the guide pin molded into one of the end caps (P/N 01-2310-23-200) is straight and smooth to allow the piston to shift properly. Inspect the piston and cylinder bore for nicks and scoring. Small nicks can be dressed with fine sandpaper and the piston returned to service. Clean and reassemble. **Install air valve to center section and tighten per the torque specifications* (Item #3).**

O-RING REPLACEMENT/CENTER SECTION

The M1 lube-free Champ series pumps are constructed with a polypropylene center section with a thermoplastic bushing. The M1 lube-free Metal pumps are constructed with a nylon center section with a thermoplastic bushing. These center sections are easily distinguished by the encircled letter "LF" stamped on the top of the center section. These bushings are not removable. This bushing has grooves cut into the inside diameter where back-up O-rings and slipper seals are installed. It is important that the correct O-ring is utilized. The back-up O-ring for the lube-free model has a bigger diameter and smaller cross-section in comparison to the "Lubed" model. The straight shaft (P/N 01-4000-09) must be utilized in the lube-free pump.

The back-up O-ring is installed first. This is most easily accomplished by using a tool called an O-ring pick, available through most industrial supply companies. The O-rings must be installed in the appropriate grooves as shown in *Figure C* (1, 3, 6, 8). Upon completion of the O-ring installation, the slipper seals (P/N 01-3210-55-200) must be installed in the same grooves (1, 3, 6, 8). This task is accomplished by utilizing long nose pliers and a flat head screw driver. Please see *Figures D, E,* and *F.*

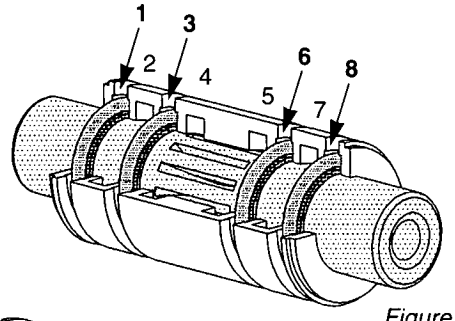

Figure C

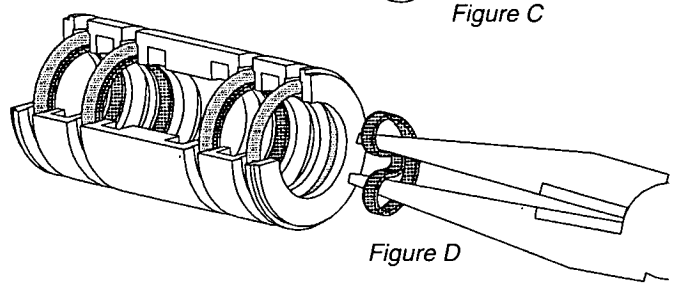
Figure D

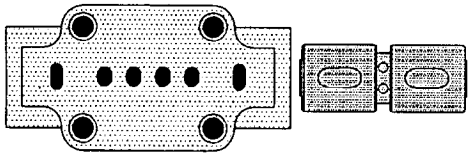
Figure B

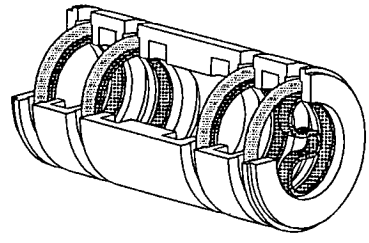
Figure E

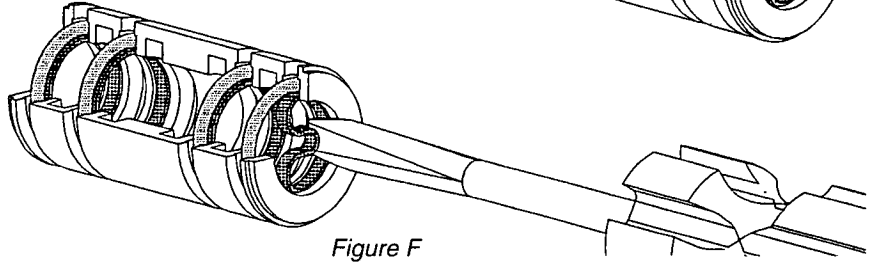
Figure F

*Refer to page 43 for torque specifications.

SECTION 6B

DIRECTIONS FOR DISASSEMBLY/REASSEMBLY
M1 ULTRAPURE II AND III

CAUTION: Before any maintenance or repair is attempted, the compressed air line to the pump should be disconnected and all air pressure allowed to bleed from pump. Disconnect all intake, discharge, and air lines. Drain the pump by turning it upside down and allowing any fluid to flow into a suitable container.

The Wilden® Ultrapure III pump model is an air-operated, double-diaphragm pump with all wetted parts molded in pure **Teflon® PFA.** The single-piece center section, consisting of center block and air chambers, is molded from glass-filled Polypropylene. All fasteners and hardware are Teflon®-coated or stainless steel. The primary diaphragm is constructed of Teflon® PTFE. All wetted sealing O-rings are Chemraz®. The air distribution system is made solely of plastic composites and is lube-free. All O-rings used in the pump are of a special material, and should only be replaced with Wilden factory-supplied parts.

Tools required to perform maintenance on the Model M1 pump are: 3/16-inch and 9/64-inch Allen wrench, 7/16-inch wrench, two open end adjustable wrenches, and an O-ring pick.

PLEASE read all directions before starting disassembly.

DISASSEMBLY

Step 1.

Before actual disassembly is started, turn pump upside down and drain all liquid trapped in the pump into a suitable container. Be sure to use proper caution if liquid is corrosive or toxic. Mark each liquid chamber to its respective air chamber for easy alignment during reassembly.

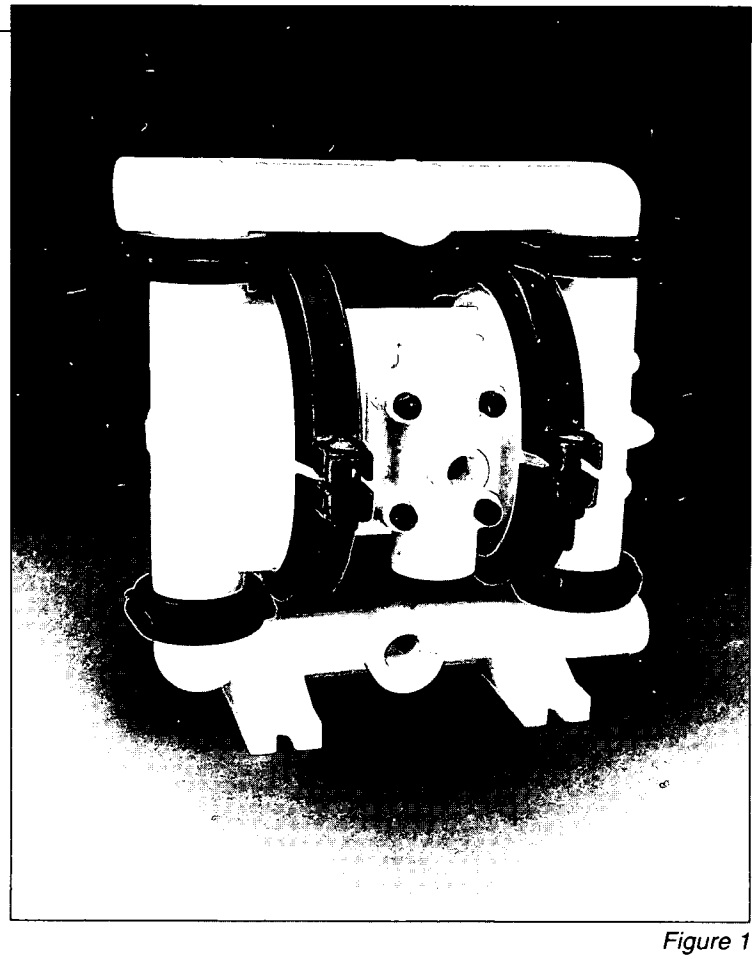

Figure 1

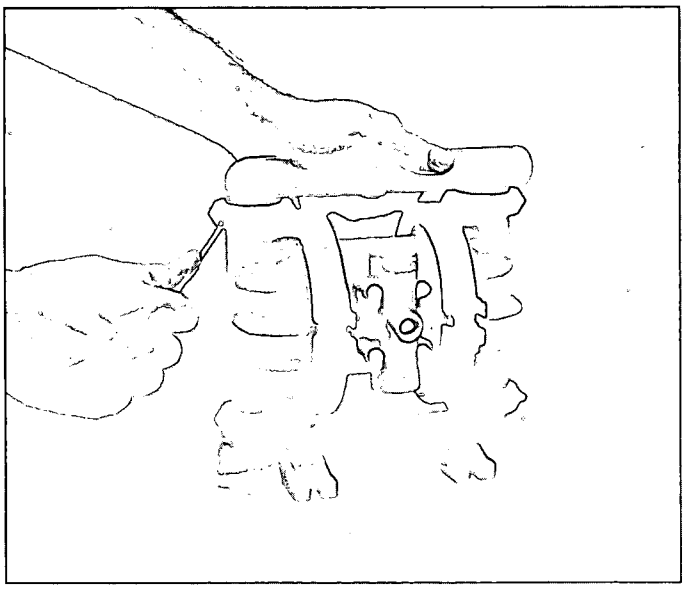

Figure 2

Step 1.

Using a 9/64-inch Allen wrench, remove clamp bands that hold the discharge manifold to the water chamber.

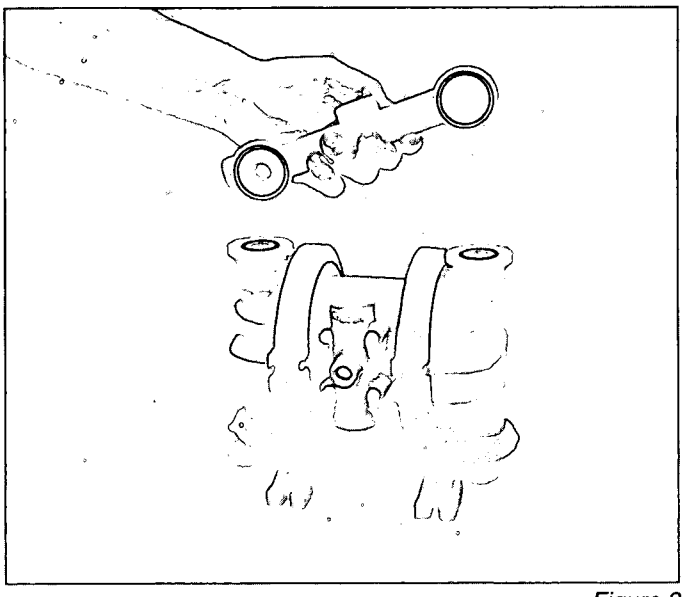

Figure 3

Step 2.

Remove discharge manifold. It is now possible to inspect the Chemraz® outboard O-rings.

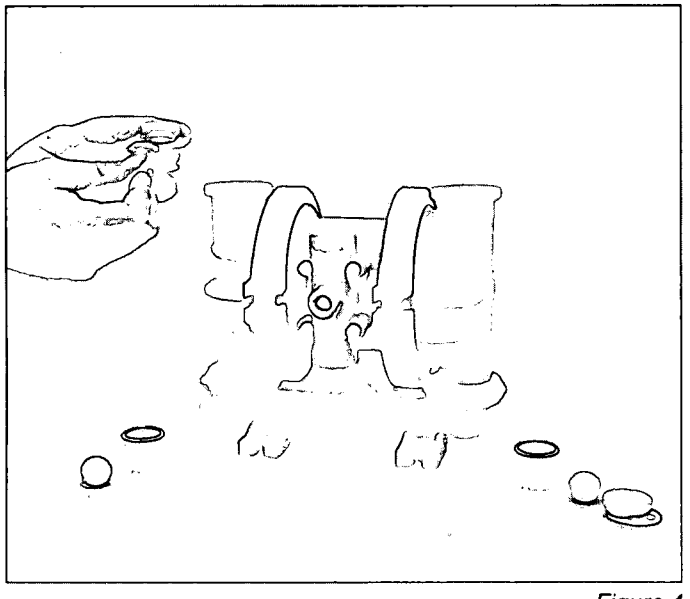

Figure 4

Step 3.

Remove the O-ring, ball cage and ball valve from the water chamber. It is now possible to inspect these parts (see *Figure 4).* Using the O-ring pick, remove the seat and seat O-ring from the water chamber for further inspection. If swelling, cracking or other damage is apparent, these parts must be replaced.

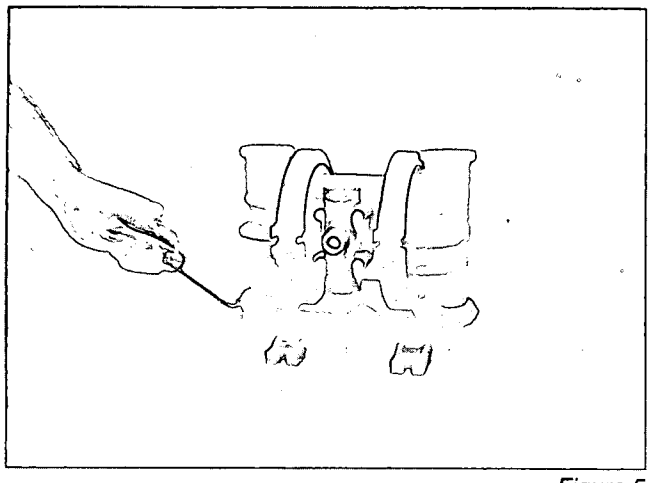

Figure 5

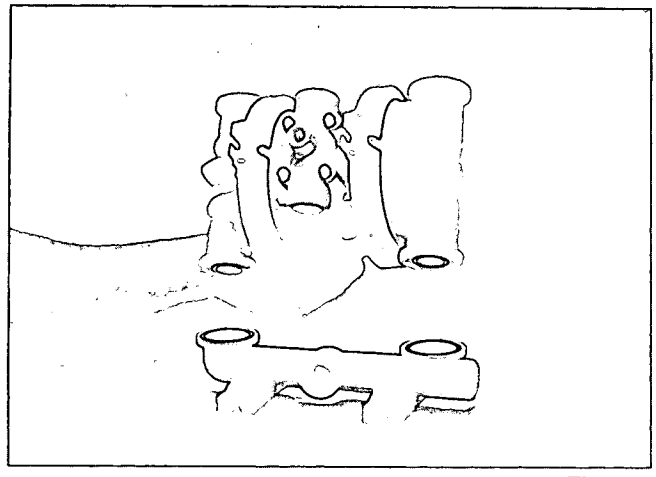

Figure 6

Step 4.

Loosen and remove clamp bands from around the inlet manifold (see *Figure 5).* Lift center section off of the inlet manifold (see *Figure 6).* It is now possible to inspect the Chemraz® outboard O-rings on the inlet manifold.

Step 5.

Place center section upside-down on a flat surface. Remove the O-ring, seat and valve ball from the bottom of the water chamber. It is now possible to inspect these parts. If swelling, cracking or other damage is apparent these parts must be replaced (see *Figure 7).*

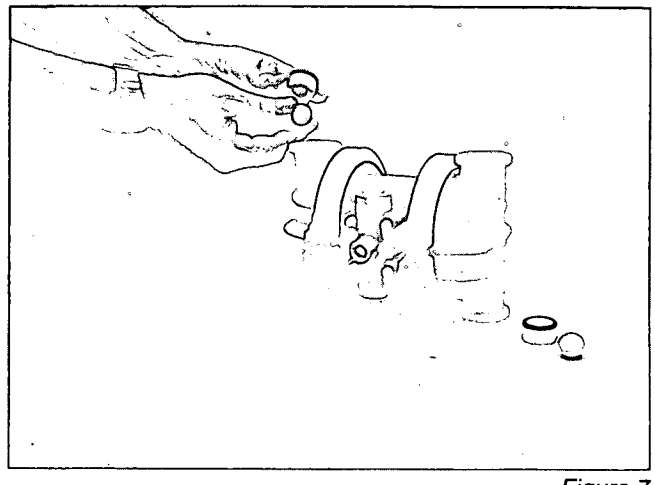

Figure 7

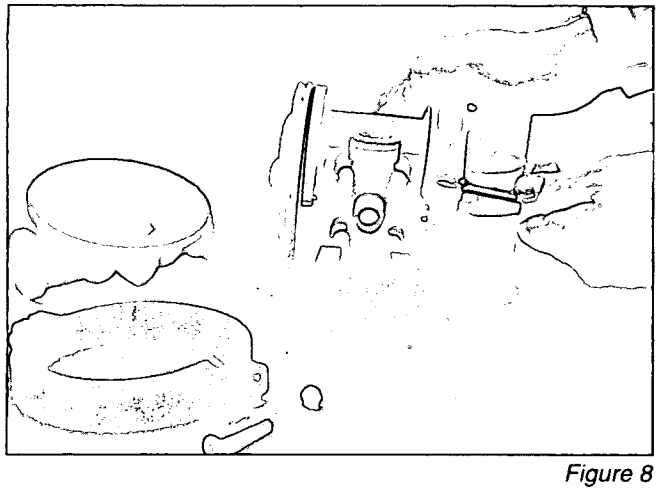

Figure 8

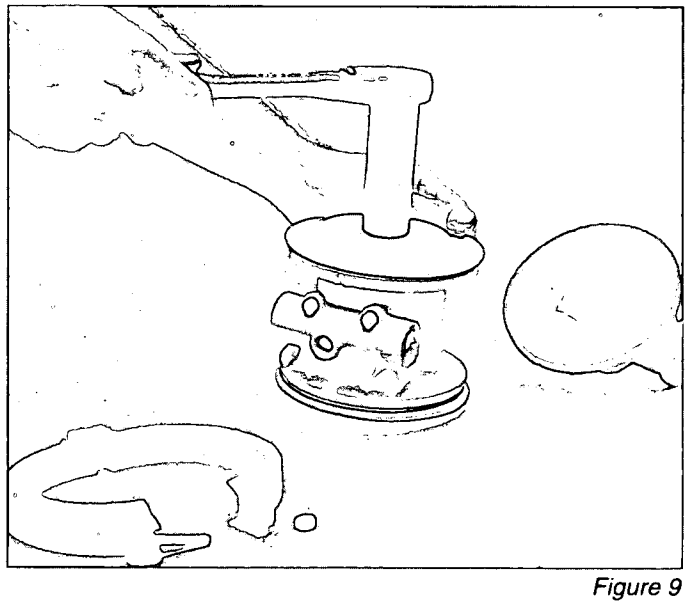

Figure 9

Step 6.

Loosen and remove clamp bands from around the water chambers (see *Figure 8).* This allows for inspection of the primary Teflon® PTFE and Buna-N back-up diaphragms. Use the six point box wrench to loosen the diaphragm outer piston plate from the connecting shaft.

Figure 10

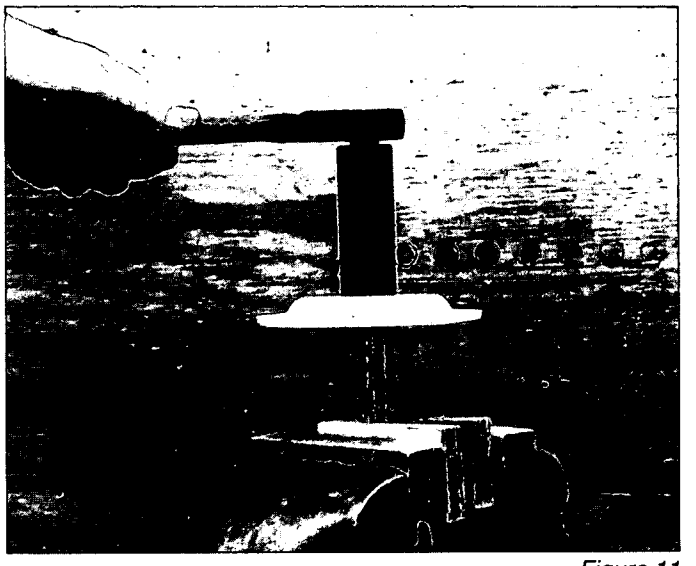

Figure 11

Step 7.

Only one piston plate will loosen in Step 6. Remove it and the diaphragms. Remove the shaft and attached diaphragm from the center block. Set back-up O-ring aside. To remove the diaphragm from the shaft, hold the outer rim of the diaphragm and loosen the diaphragm piston plate with the box wrench. If the plate will not loosen, the shaft must be placed in a vise. **Protect the shaft from damage by using wood blocks or soft jaws in the vise.** The plate can now be easily removed with the box wrench.

At this point of disassembly, all wetted parts of the pump are available for inspection or repair.

If inspection and/or servicing of the non-wetted air section is necessary, please see page 30.

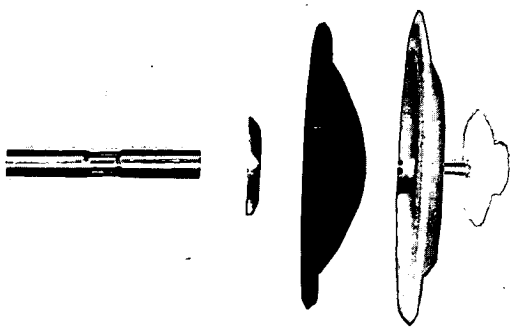

Figure 11

REASSEMBLY

Step 1.

Insert the outer piston stud through the Teflon® diaphragm, Buna-N back-up diaphragm, and inner piston. Hand-tighten this assembly onto the shaft (see *Figure 11).*

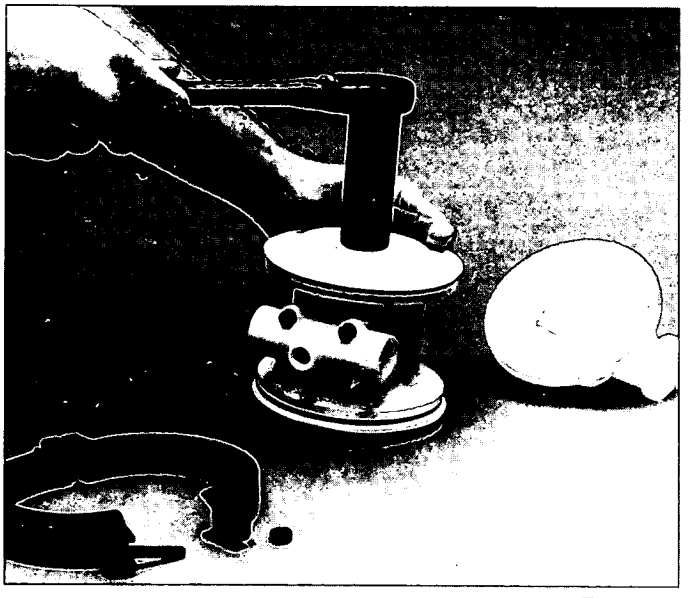

Figure 15

Step 2.

Insert the shaft through the center section bushing. Install the opposite inner piston, diaphragms, and outer piston and tighten per the torque specifications* (Item #5). (See *Figure 12).*

*Refer to page 43 for torque specifications.

Step 3.

Teflon® Diaphragms. M1 pumps fitted with Teflon® diaphragms require the use of a Teflon® gasket kit, P/N TF1GK. The Teflon® gasket material in this kit is an expanded type of Teflon® which is very strong but soft. Its use assures a positive seal between the Teflon® diaphragm outer bead and its corresponding groove in the water chamber. This gasket material should be replaced each time the pump is disassembled.

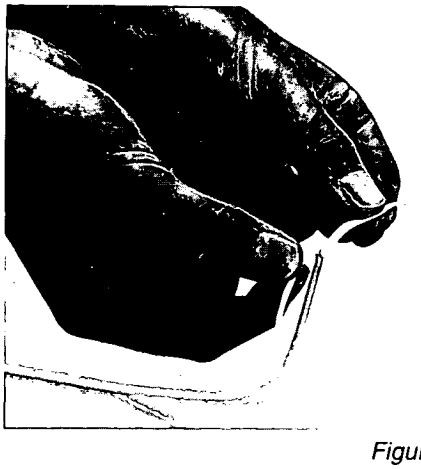

Figure 16

Select a strip of 1/4" wide material approximately 15 inches in length and carefully remove the covering from the adhesive strip (see *Figure 16).* Ensure that the adhesive remains attached to the gasket material.

Figure 17

Starting at any point, place the gasket strip in the center of the diaphragm bead groove on the water chamber and press lightly on the gasket to ensure that the adhesive holds it in place during assembly (see *Figure 17).*

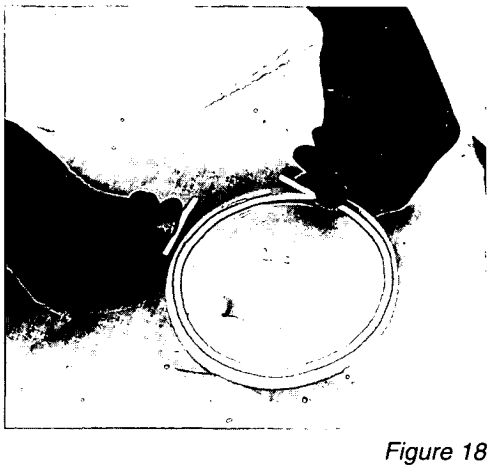

Figure 18

The ends of the gasket strip should overlap approximately 1/2 inch (see *Figure 18).*

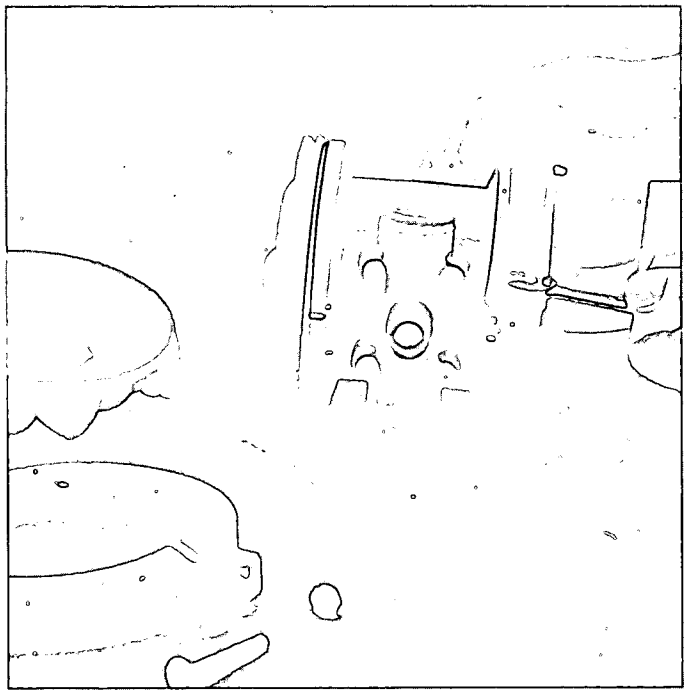

Figure 19

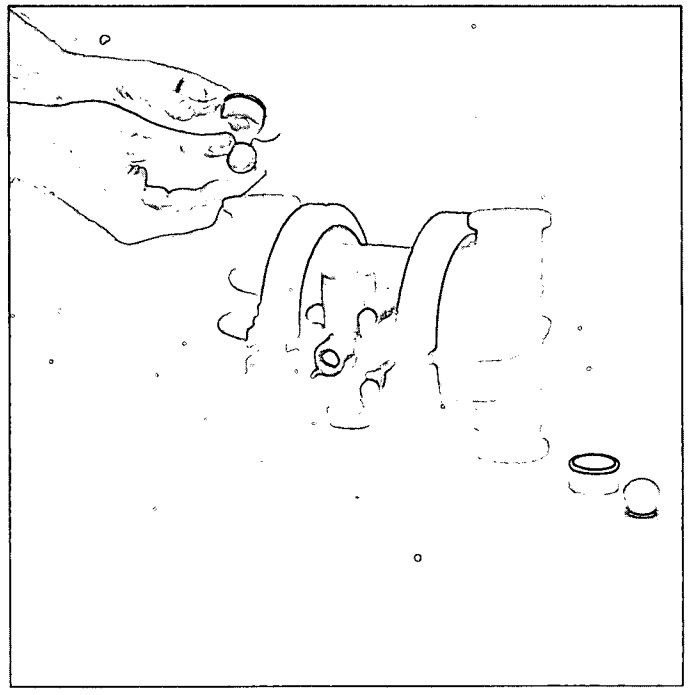

Figure 20

Step 4.

Attach water chambers to the center block making certain to realign your marks (see *Figure 16).* Replace large clamp bands and tighten per the torque specifications* (Item #9).

Step 5.

With center section upside-down, insert valve balls, seat and O-rings into the bottom of the water chambers. Install outboard Chemraz® O-rings in inlet manifold. Realign the inlet manifold (see *Figure 17)* and attach clamp bands. Tighten per the torque specifications* (Item #7). The inlet should be facing the same direction as the air valve.

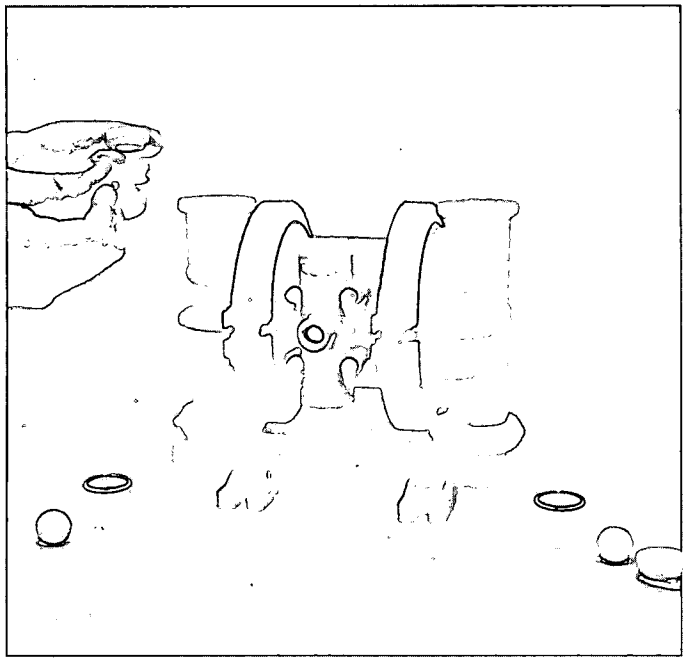

Figure 21

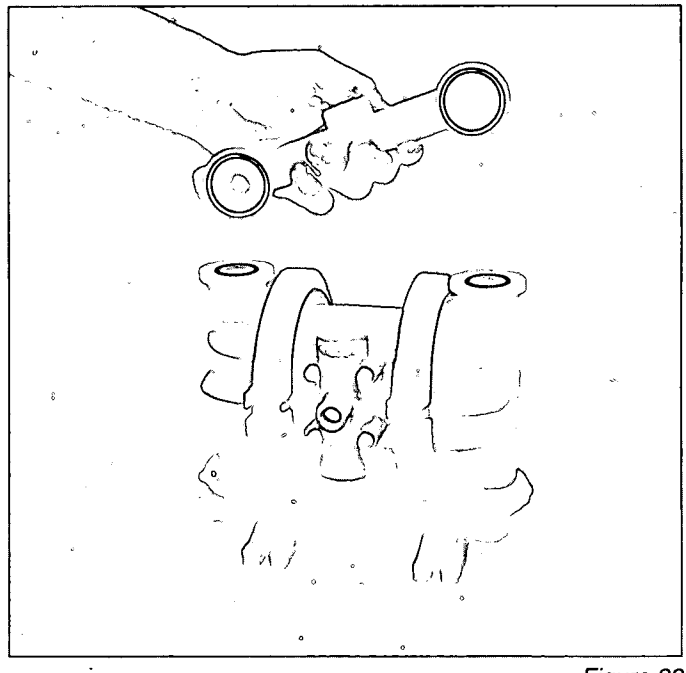

Figure 22

Step 6.

Turn the pump right-side-up. Insert the seat with O-ring installed in bottom groove, ball valve, ball cage and O-ring in the top of the water chamber. Install outboard Chemraz® O-rings in discharge manifold. Realign the discharge manifold with the discharge facing toward the air valve. Attach clamp bands (see *Figure 18).* Tighten per the torque specifications* (Item #7).

*Refer to page 43 for torque specifications.

ULTRAPURE III LUBE-FREE PUMPS
AIR VALVE / CENTER SECTION REPAIR / MAINTENANCE

AIR VALVE/CENTER SECTION REPAIR/MAINTENANCE

The center section assembly consists of the air valve body, piston, and the center section. The lube-free design utilizes high-tech, engineered thermoplastics as well as slipper seals to reduce the coefficient of friction between the shaft and center section. This lube-free design includes the straight shaft and altered exhaust port configuration utilized in the enhanced M1 air distribution system. Low start-up pressure, on/off reliability, and increased sealing in a dead-head condition are a few of the advantages of the lube-free air distribution system. The selected thermoplastics have the ability to function together without lubrication making the M1 Wilden pump truly lube-free. ***The M1 lube-free pumps are not pre-lubed with oil or grease.***

AIR VALVE BODY AND PISTON ASSEMBLY AND DISASSEMBLY

The air valve body and piston (P/N 01-2000-65-200) is externally serviceable by removing the four socket-head cap screws which attach it to the center section. The lube-free air valve body is off-white in color and has an encircled "LF" molded into the exterior.

The piston should move freely and the ports in the piston must line-up with the ports on the face of the air valve body (see *Figure A).* If the piston does not move freely in the valve body, the entire air valve assembly should be immersed in a mild soap solution to remove any accumulation of sludge and/or grit. If the air valve does not move freely after the above cleaning, the air valve should be disassembled as follows: Remove the snap ring from the top of the air valve cylinder and apply an air jet to the hole on the opposite end of the air valve face. Caution: The end cap may come out with considerable force. Verify that the guide pin molded into one of the end caps (P/N 01-2310-23-200) is straight and smooth to allow the piston to shift properly. Inspect the piston and cylinder bore for nicks and scoring. Small nicks can be dressed with fine sandpaper and the piston returned to service. Clean and reassemble. **Install air valve to center section and tighten per the torque specifications* (Item #2).**

O-RING REPLACEMENT/CENTER SECTION

The M1 lube-free Ultrapure III pumps are constructed with a polypropylene center section with a thermoplastic bushing. This bushing is not removable and has grooves cut into the inside diameter where back-up O-rings and slipper seals are installed. It is important that the correct O-ring is utilized. The back-up O-ring for the lube-free model has a bigger diameter and smaller cross-section in comparison to the "Lubed" model. The straight shaft (P/N 01-4000-09) must be utilized in the lube-free pump.

The back-up O-ring is installed first. This is most easily accomplished by using a tool called an O-ring pick, available through most industrial supply companies. The O-rings must be installed in the appropriate grooves as shown in *Figure B* (1, 3, 6, 8). Upon completion of the O-ring installation, the slipper seals (P/N 01-3210-55-200) must be installed in the same grooves (1, 3, 6, 8). This task is accomplished by utilizing long nose pliers and a flat head screw driver. Please see *Figures C, D,* and *E.*

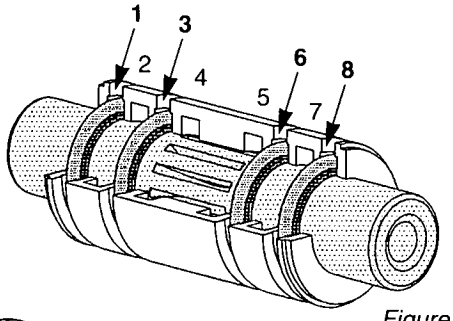

Figure B

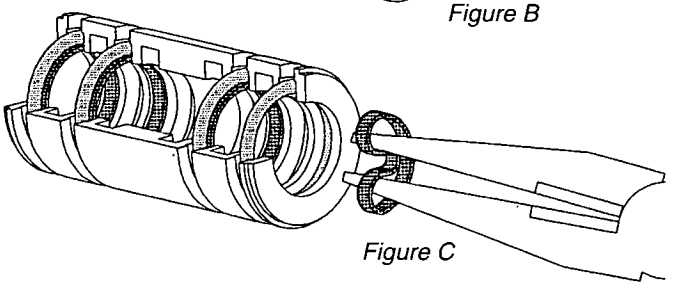
Figure C

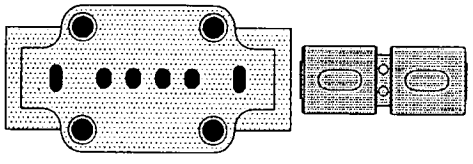
Figure A

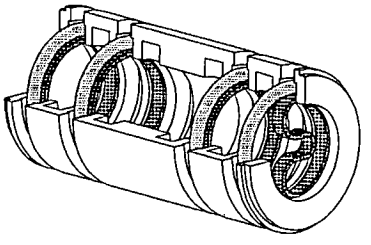
Figure D

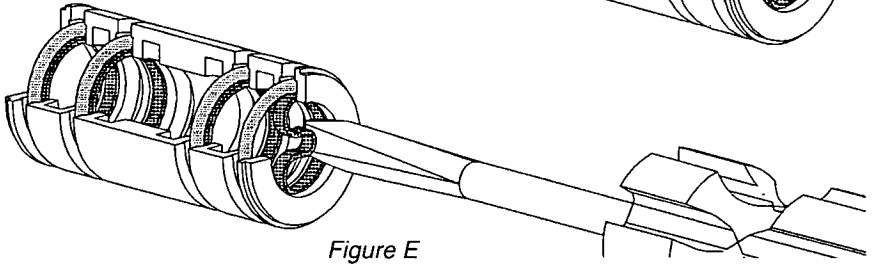
Figure E

*Refer to page 43 for torque specifications.

SECTIONS 7A, 7B

EXPLODED VIEWS

M1 METAL AIR-OPERATED
M1 CHAMP AIR-OPERATED

M1 METAL AIR-OPERATED

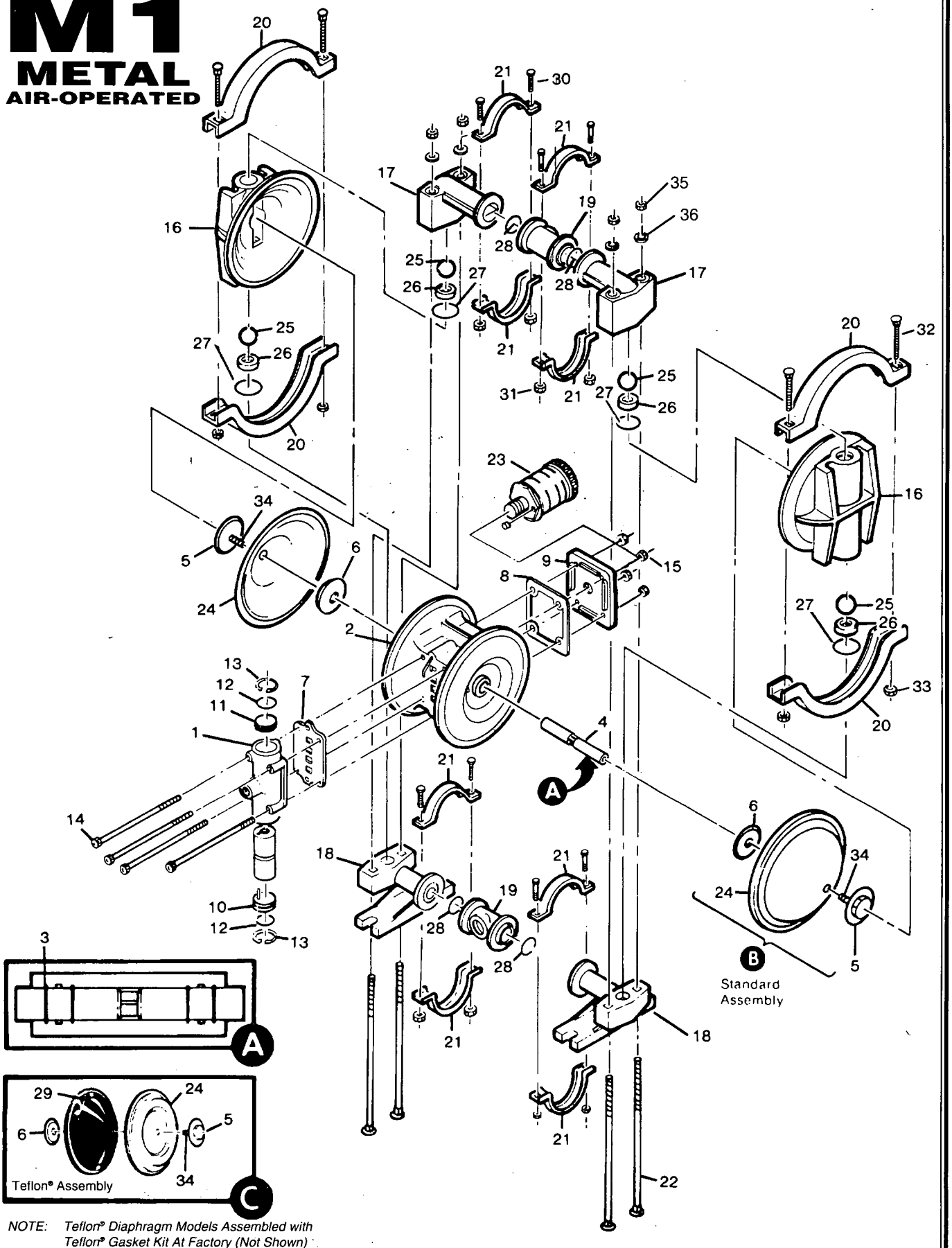

NOTE: Teflon® Diaphragm Models Assembled with Teflon® Gasket Kit At Factory (Not Shown)

MODEL M1 METAL

Food Processing

Item	Part Description	Qty. Per Pump	M1/OO P/N	M1/TO P/N	M1/SO P/N	M1/ST P/N	M1/SG P/N	M1/SN P/N
1	Air Valve Assembly[1]	1	01-2000-07	01-2000-07	01-2000-07	01-2000-07	01-2000-06	01-2000-06
2	Center Section[2]	1	01-3151-23[2]	01-3151-23[2]	01-3151-23[2]	01-3151-23[2]	01-3151-23[2]	01-3151-23[2]
3	Center Block O-Ring	4	01-3200-52	10-3200-52	10-3200-52	10-3200-52	01-3200-52	01-3200-52
4	Shaft[2]	1	01-4000-09[2]	01-4000-09[2]	01-4000-09[2]	01-4000-09[2]	01-4000-09[2]	01-4000-09[2]
5	Pistons/Outer	2	99B	99B	S99B	S99B	S99B	S99B
6	Pistons/Inner	2	P99C	P99C	P99C	P99C	P99C	P99C
7	Air Valve Gasket	1	01-2600-30	01-2600-30	01-2600-30	01-2600-30	01-2600-30	01-2600-30
8	Muffler Plate Gasket	1	P92MG	P92MG	P92MG	P92MG	P92MG	P92MG
9	Muffler Plate	1	P92MN	P92MN	P92MN	P92MN	P92MN	P92MN
10	End Cap w/Guide	1	01-2340-23	01-2340-23	01-2340-23	01-2340-23	01-2340-23	01-2340-23
11	End Cap w/o Guide	1	01-2350-23	01-2350-23	01-2350-23	01-2350-23	01-2350-23	01-2350-23
12	Buna O-Ring - 115 70 Shore	2	100U	100U	100U	100U	100U	100U
13	End Cap Snap Ring	2	S90T	S90T	S90T	S90T	S90T	S90T
14	Air Valve Cap Screw	4	101AS	101AS	101AS	101AS	101AS	101AS
15	Air Valve Cap Screw Nut	4	S62C	S62C	S62C	S62C	S62C	S62C
16	Water Chamber	2	95	95	S95	S95	S95	S95
17	Discharge Manifold Elbow	2	96	96	S96	S96	S96	S96
18	Inlet Manifold Elbow	2	97	97	S97	S97	S97	S97
19	Manifold "T" Section	2	98	98	S98	S98	01-6170-03	01-6170-03
20	Clamp Band (Large)	2	P94	P94	P94	P94	P94	P94
21	Clamp Band (Small)	4	P98D	P98D	P98D	P98D	P98D	P98D
22	Vertical Bolt	4	104A	104A	104A	104A	104A	104A
23	Muffler	1	70D	70D	70D	70D	70D	70D
24	Diaphragm	2	*	TF93	*	TF93	01-1010-56	TF93
25	Valve Ball	4	*	TF111	*	TF111	01-1080-56	TF111
26	Valve Seat	4	A110	A110	S110	S110	S110	S110
27	Valve Seat O-Ring	4	*	PT110B	*	PT110B	01-1200-56	PT110B
28	Manifold O-Ring	4	*	PT98B	*	PT98B	01-6320-56	PT98B
29	Back-up Diaphragm	2	N/R	TF93B	N/R	TF93B	N/R	TF93B
30	Small Clamp Band Bolt	8	S98B	S98B	S98B	S98B	S98B	S98B
31	Small Clamp Band Nut	8	S98C	S98C	S98C	S98C	S98C	S98C
32	Large Clamp Band Bolt	4	S94B	S94B	S94B	S94B	S94B	S94B
33	Large Clamp Band Nut	4	S62C	S62C	S62C	S62C	SP69WN	SP69WN
34	Shaft Stud	2	101F	101F	101F	101F	101F	101F
35	Vertical Bolt Nut	4	S62C	S62C	S62C	S62C	S62C	S62C
36	Vertical Bolt Washer	4	104C	104C	104C	104C	104C	104C

LUBE-FREE MODEL M1 METAL

Food Processing

Item	Part Description	Qty. Per Pump	M1/OO *LF* P/N	M1/TO *LF* P/N	M1/SO *LF* P/N	M1/ST *LF* P/N	M1/SG *LF* P/N	M1/SN *LF* P/N
1	Air Valve Assembly — Lube-Free[1]	1	01-2000-65-200	01-2000-65-200	01-2000-65-200	01-2000-65-200	01-2000-65-200	01-2000-65-200
2	Nylon Center Section — Lube-Free[2]	1	01-3150-23-200	01-3150-23-200	01-3150-23-200	01-3150-23-200	01-3150-23-200	01-3150-23-200
3	Buna O-Ring - 115 70 Shore	4	100U	100U	100U	100U	100U	100U
	Slipper Seal (Not shown)	4	01-3210-55-200	01-3210-55-200	01-3210-55-200	01-3210-55-200	01-3210-55-200	01-3210-55-200
4	Shaft[2]	1	01-4000-09[2]	01-4000-09[2]	01-4000-09[2]	01-4000-09[2]	01-4000-09[2]	01-4000-09[2]
5	Pistons/Outer	2	99B	99B	S99B	S99B	S99B	S99B
6	Pistons/Inner	2	P99C	P99C	P99C	P99C	P99C	P99C
7	Air Valve Gasket	1	01-2600-30	01-2600-30	01-2600-30	01-2600-30	01-2600-30	01-2600-30
8	Muffler Plate Gasket	1	P92MG	P92MG	P92MG	P92MG	P92MG	P92MG
9	Muffler Plate	1	P92MN	P92MN	P92MN	P92MN	P92MN	P92MN
10	End Cap w/Plastic Guide	1	01-2310-23-200	01-2310-23-200	01-2310-23-200	01-2310-23-200	01-2310-23-200	01-2310-23-200
11	End Cap w/o Guide	1	01-2350-23	01-2350-23	01-2350-23	01-2350-23	01-2350-23	01-2350-23
12	Buna O-Ring - 115 70 Shore	2	100U	100U	100U	100U	100U	100U
13	End Cap Snap Ring	2	S90T	S90T	S90T	S90T	S90T	S90T
14	Air Valve Cap Screw	4	101AS	101AS	101AS	101AS	101AS	101AS
15	Air Valve Cap Screw Nut	4	S62C	S62C	S62C	S62C	S62C	S62C
16	Water Chamber	2	95	95	S95	S95	S95	S95
17	Discharge Manifold Elbow	2	96	96	S96	S96	S96	S96
18	Inlet Manifold Elbow	2	97	97	S97	S97	S97	S97
19	Manifold "T" Section	2	98	98	S98	S98	01-6170-03	01-6170-03
20	Clamp Band (Large)	2	P94	P94	P94	P94	P94	P94
21	Clamp Band (Small)	4	P98D	P98D	P98D	P98D	P98D	P98D
22	Vertical Bolt	4	P104	P104	P104	P104	104A	104A
23	Muffler	1	70D	70D	70D	70D	70D	70D
24	Diaphragm	2	*	TF93	*	TF93	01-1010-56	TF93
25	Valve Ball	4	*	TF111	*	TF111	01-1080-56	TF111
26	Valve Seat	4	A110	A110	S110	S110	S110	S110
27	Valve Seat O-Ring	4	*	PT110B	*	PT110B	01-1200-56	PT110B
28	Manifold O-Ring	4	*	PT98B	*	PT98B	01-6320-56	PT98B
29	Back-up Diaphragm	2	N/R	TF93B	N/R	TF93B	N/R	TF93B
30	Small Clamp Band Bolt	8	S98B	S98B	S98B	S98B	S98B	S98B
31	Small Clamp Band Nut	8	S98C	S98C	S98C	S98C	S98C	S98C
32	Large Clamp Band Bolt	4	S94B	S94B	S94B	S94B	S94B	S94B
33	Large Clamp Band Nut	4	S62C	S62C	S62C	S62C	SP69WN	SP69WN
34	Shaft Stud	2	101F	101F	101F	101F	101F	101F
35	Vertical Bolt Nut	4	S62C	S62C	S62C	S62C	S62C	S62C
36	Vertical Bolt Washer	4	104C	104C	104C	104C	104C	104C

[1]Air Valve Assembly includes items 10, 11, 12, 13.
[2]Refer to page 22-23 prior to ordering these parts.
*Refer to corresponding elastomer chart on page 43.

M1 CHAMP AIR-OPERATED

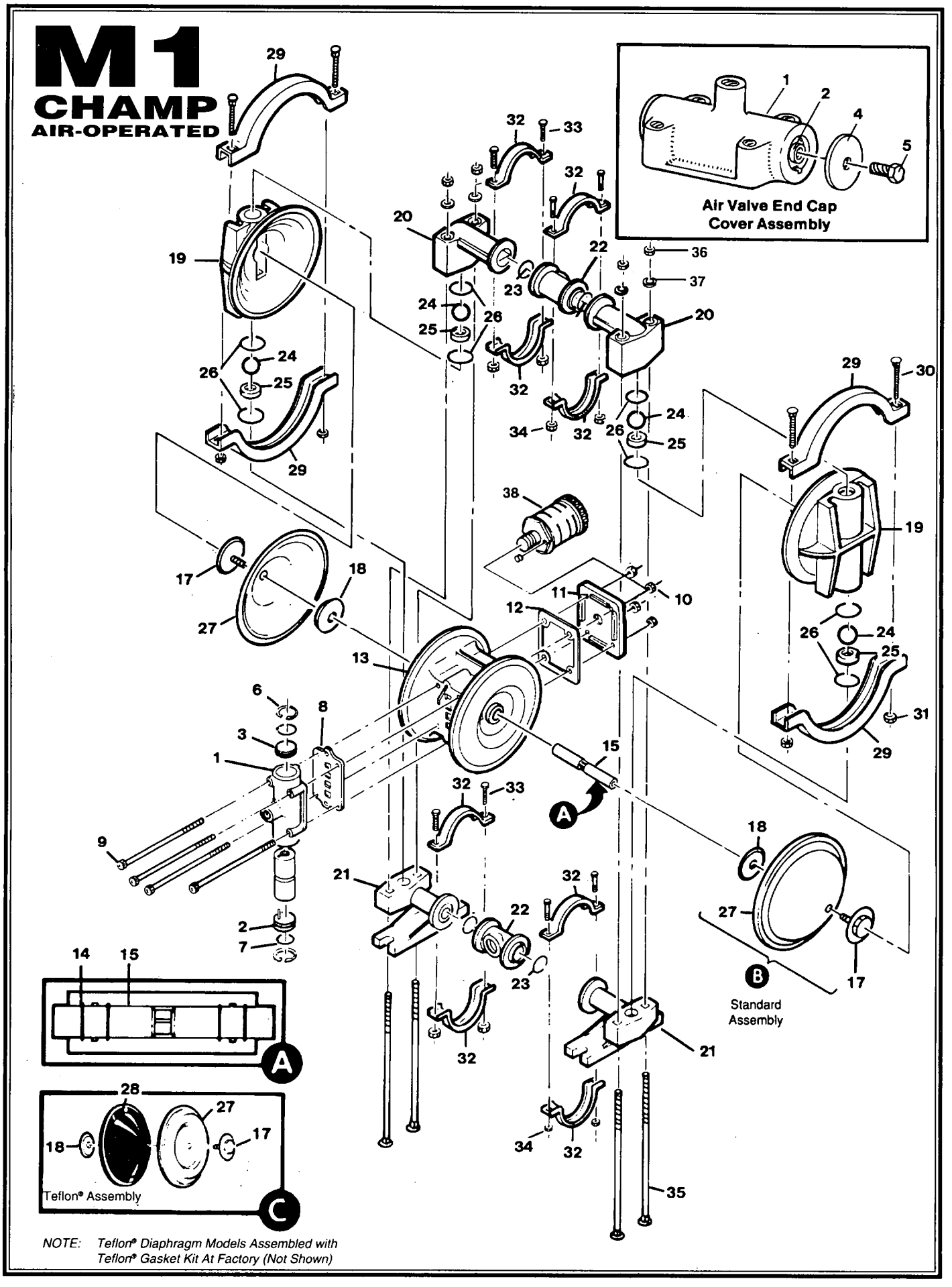

NOTE: *Teflon® Diaphragm Models Assembled with Teflon® Gasket Kit At Factory (Not Shown)*

MODEL M1 CHAMP RUBBER/TPE-FITTED

Item	Part Description	Qty. Per Pump	M1/PO P/N	M1/KO P/N	M1/PC P/N	M1/KC P/N	M1/GO P/N
1	Air Valve Assembly[1]	1	01-2000-07	01-2000-07	01-2000-05	01-2000-05	01-2000-07
2	Air Valve End Cap w/Guide (Top)	1	01-2340-23	01-2340-23	01-2340-23	01-2340-23	01-2340-23
3	Air Valve End Cap w/o Guide (Bottom)	1	01-2350-23	01-2350-23	01-2350-23	01-2350-23	01-2350-23
4	Air Valve End Cap Cover	2	N/A	N/A	01-2420-55	01-2420-55	N/A
5	Air Valve End Cap Bolt	2	N/A	N/A	01-2450-22	01-2450-22	N/A
6	Snap Ring	2	S90T	S90T	S90T	S90T	S90T
7	Buna O-Ring - 115 70 Shore	2	100U	100U	100U	100U	100U
8	Air Valve Gasket	1	01-2600-30	01-2600-30	01-2600-30	01-2600-30	01-2600-30
9	Air Valve Screw	4	101AS	101AS	PC101AS	PC101AS	101AS
10	Air Valve Screw Nut	4	S62C	S62C	PCS62C	PCS62C	S62C
11	Muffler Plate	1	P92M	P92M	P92M	P92M	01-3180-25
12	Muffler Plate Gasket	1	P92MG	P92MG	P92MG	P92MG	P92MG
13	Center Section[2]	1	01-3151-20[2]	01-3151-20[2]	01-3151-20[2]	01-3151-20[2]	01-3152-25[2]
14	Center Block O-Ring	4	01-3200-52	01-3200-52	01-3200-52	01-3200-52	01-3200-52
15	Shaft[2]	1	01-4000-09[2]	01-4000-09[2]	01-4000-09[2]	01-4000-09[2]	01-4000-09[2]
16	Shaft Stud[1]	2	N/A	N/A	N/A	N/A	N/A
17	Piston, Outer	2	P99B	K99B	P99B	K99B	P99B
18	Piston, Inner	2	P99C	P99C	P99C	P99C	P99C
19	Liquid Chamber	2	P95	K95	P95	K95	GP95
20	Discharge Manifold Elbow	2	P96	K96	P96	K96	GP96
21	Inlet Manifold Elbow	2	P97	K97	P97	K97	GP97
22	Manifold Tee Section (Female, Threaded)	2	P98	K98	P98	K98	GP98
23	Manifold O-Ring	4	*	*	*	*	*
24	Valve Ball	4	*	*	*	*	*
25	Valve Seats	4	KT110	KT110	KT110	KT110	KT110
26	Valve Seat O-Ring	8	*	*	*	*	*
27	Diaphragm	2	*	*	*	*	*
28	Back-up Diaphragm	2	N/A	N/A	N/A	N/A	N/A
29	Large Clamp Band	2	P94	P94	PC94	PC94	P94
30	Large ClampBand Bolt	4	S94B	S94B	PCS94B	PCS94B	S94B
31	Large Clamp Band Nut	4	S62C	S62C	PCS62C	PCS62C	S62C
32	Small Clamp Band	4	P98D	P98D	PC98D	PC98D	P98D
33	Small Clamp Band Bolt	8	S98B	S98B	PCS98B	PCS98B	S98B
34	Small Clamp Band Nut	8	S98C	S98C	PCS98C	PCS98C	S98C
35	Vertical Bolt	4	104A	104A	PC104A	PC104A	P104A
36	Vertical Bolt Nut	4	S62C	S62C	PCS62C	PCS62C	S62C
37	Vertical Bolt Washer	4	104C	104C	PC104C	PC104C	PC104C
38	Muffler	1	70D	70D	70D	70D	70D

LUBE-FREE MODEL M1 CHAMP RUBBER/TPE-FITTED

Item	Part Description	Qty. Per Pump	M1/PO *LF* P/N	M1/KO *LF* P/N	M1/PC *LF* P/N	M1/KC *LF* P/N
1	Air Valve Assembly[1]. — Lube-free	1	01-2000-65-200	01-2000-65-200	01-2000-65-200	01-2000-65-200
2	Air Valve End Cap w/Plastic Guide (Top)	1	01-2310-23-200	01-2310-23-200	01-2310-23-200	01-2310-23-200
3	Air Valve End Cap w/o Guide (Bottom)	1	01-2350-23	01-2350-23	01-2350-23	01-2350-23
4	Air Valve End Cap Cover	2	N/A	N/A	01-2420-55	01-2420-55
5	Air Valve End Cap Bolt — Lube-free	2	N/A	N/A	01-2450-22-200	01-2450-22-200
6	Snap Ring	2	S90T	S90T	S90T	S90T
7	Buna O-Ring - 115 70 Shore	2	100U	100U	100U	100U
8	Air Valve Gasket	1	01-2600-30	01-2600-30	01-2600-30	01-2600-30
9	Air Valve Screw	4	101AS	101AS	PC101AS	PC101AS
10	Air Valve Screw Nut	4	S62C	S62C	PCS62C	PCS62C
11	Muffler Plate	1	P92M	P92M	P92M	P92M
12	Muffler Plate Gasket	1	P92MG	P92MG	P92MG	P92MG
13	Polypropylene Center Section[2] — Lube-free	1	01-3150-20-200	01-3150-20-200	01-3150-20-200	01-3150-20-200
14	Buna O-Ring - 115 70 Shore	4	100U	100U	100U	100U
	Slipper Seal (Not shown)	4	01-3210-55-200	01-3210-55-200	01-3210-55-200	01-3210-55-200
15	Shaft[2]	1	01-4000-09[2]	01-4000-09[2]	01-4000-09[2]	01-4000-09[2]
16	Shaft Stud[1]	2	N/A	N/A	N/A	N/A
17	Piston, Outer	2	P99B	K99B	P99B	K99B
18	Piston, Inner	2	P99C	P99C	P99C	P99C
19	Liquid Chamber	2	P95	K95	P95	K95
20	Discharge Manifold Elbow	2	P96	K96	P96	K96
21	Inlet Manifold Elbow	2	P97	K97	P97	K97
22	Manifold Tee Section (Female, Threaded)	2	P98	K98	P98	K98
23	Manifold O-Ring	4	*	*	*	*
24	Valve Ball	4	*	*	*	*
25	Valve Seats	4	KT110	KT110	KT110	KT110
26	Valve Seat O-Ring	8	*	*	*	*
27	Diaphragm	2	*	*	*	*
28	Back-up Diaphragm	2	N/A	N/A	N/A	N/A
29	Large Clamp Band	2	P94	P94	PC94	PC94
30	Large ClampBand Bolt	4	S94B	S94B	PCS94B	PCS94B
31	Large Clamp Band Nut	4	S62C	S62C	PCS62C	PCS62C
32	Small Clamp Band	4	P98D	P98D	PC98D	PC98D
33	Small Clamp Band Bolt	8	S98B	S98B	PCS98B	PCS98B
34	Small Clamp Band Nut	8	S98C	S98C	PCS98C	PCS98C
35	Vertical Bolt	4	104A	104A	PC104A	PC104A
36	Vertical Bolt Nut	4	S62C	S62C	PCS62C	PCS62C
37	Vertical Bolt Washer	4	104C	104C	PC104C	PC104C
38	Muffler	1	70D	70D	70D	70D

[1]Shaft stud is molded into outer piston on all plastic pumps.
[2]Refer to pages 22-23 prior to ordering these parts.
*Refer to corresponding elastomer chart on page 43.

MODEL M1 CHAMP TEFLON®-FITTED

Item	Part Description	Qty. Per Pump	M1/PT P/N	M1/KT P/N	M1/PP P/N	M1/KK P/N	M1/UO P/N	M1/UP P/N	M1/UH P/N	M1/UC P/N	M1/GT P/N
1	Air Valve Assembly[1]	1	01-2000-07	01-2000-07	01-2000-05	01-2000-05	01-2000-07	01-2000-05	01-2000-07	01-2000-05	01-2000-07
2	Air Valve End Cap w/Guide (Top)	1	01-2340-23	01-2340-23	01-2340-23	01-2340-23	01-2340-23	01-2340-23	01-2340-23	01-2340-23	01-2340-23
3	Air Valve End Cap w/o Guide (Bottom)	1	01-2350-23	01-2350-23	01-2350-23	01-2350-23	01-2350-23	01-2350-23	01-2350-23	01-2350-23	01-2350-23
4	Air Valve End Cap Cover	2	N/A	N/A	01-2420-55	01-2420-55	N/A	01-2420-55	N/A	01-2420-55	N/A
5	Air Valve End Cap Bolt	2	N/A	N/A	01-2450-22	01-2450-22	N/A	01-2450-22	N/A	01-2450-22	N/A
6	Snap Ring	2	S90T	S90T	S90T	S90T	S90T	S90T	S90T	S90T	S90T
7	Buna O-Ring - 115 70 Shore	2	100U	100U	100U	100U	100U	100U	100U	100U	100U
8	Air Valve Gasket	1	01-2600-30	01-2600-30	01-2600-30	01-2600-30	01-2600-55	01-2600-55	01-2600-55	01-2600-55	01-2600-30
9	Air Valve Screw	4	101AS	101AS	PC101AS	PC101AS	101AS	PC101AS	101AS	PC101AS	101AS
10	Air Valve Screw Nut	4	S62C	S62C	PCS62C	PCS62C	S62C	PCS62C	S62C	PCS62C	S62C
11	Muffler Plate	1	P92M	P92M	P92M	P92M	P92M	P92M	P92M	P92M	01-3180-25
12	Muffler Plate Gasket	1	P92MG	P92MG	P92MG	P92MG	TF92MG	TF92MG	TF92MG	TF92MG	P92MG
13	Center Section[2]	1	01-3151-20[2]	01-3151-20[2]	01-3151-20[2]	01-3151-20[2]	01-3151-20[2]	01-3151-20[2]	01-3151-20[2]	01-3151-20[2]	01-3152-25[2]
14	Center Block O-Ring	4	01-3200-52	01-3200-52	01-3200-52	01-3200-52	01-3200-52	01-3200-52	01-3200-52	01-3200-52	01-3200-52
15	Shaft[2]	1	01-4000-09[2]	01-4000-09[2]	01-4000-09[2]	01-4000-09[2]	01-4000-09[2]	01-4000-09[2]	01-4000-09[2]	01-4000-09[2]	01-4000-09[2]
16	Shaft Stud[1]	2	N/A	N/A	N/A	N/A	N/A	N/A	N/A	N/A	N/A
17	Piston, Outer	2	P99B	K99B	P99B	K99B	PF99B	PF99B	PF99B	PF99B	P99B
18	Piston, Inner	2	P99C	P99C	P99C	P99C	P99C	P99C	P99C	P99C	P99C
19	Liquid Chamber	2	P95	K95	P95	K95	PF95	PF95	PF95	PF95	GP95
20	Discharge Manifold Elbow	2	P96	K96	P96	K96	PF96	PF96	PF96	PF96	GP96
21	Inlet Manifold Elbow	2	P97	K97	P97	K97	PF97	PF97	PF97	PF97	GP97
22	Manifold Tee Section (Female, Threaded)	2	P98	K98	P98	K98	PF98	PF98	PFT98	PFT98	GP98
23	Manifold O-Ring	4	TFE98B	TFE98BV	TFE98B	TFE98BV	TFE98BV	TFE98BV	TFE98BV	TFE98BV	TFE98B
24	Valve Ball	4	TF111	TF111	TF111	TF111	TF111	TF111	TF111	TF111	TF111
25	Valve Seats	4	KT110	KT110	KT110	KT110	PF110	PF110	PF110	PF110	KT110
26	Valve Seat O-Ring	8	TFE110B	TFE110BV	TFE110B	TFE110BV	TFE110BV	TFE110BV	TFE110BV	TFE110BV	TFE110B
27	Diaphragm	2	TF93	TF93	TF93	TF93	TF93	TF93	TF93	TF93	TF93
28	Back-up Diaphragm	2	TF93B	TF93B	TF93B	TF93B	TF93B	TF93B	TF93B	TF93B	TF93B
29	Large Clamp Band	2	P94	P94	PC94	-PC94	P94	PC94	P94	PC94	P94
30	Large Clamp Band Bolt	4	S94B	S94B	PCS94B	PCS94B	S94B	PCS94B	S94B	PCS94B	S94B
31	Large Clamp Band Nut	4	S62C	S62C	PCS62C	PCS62C	S62C	PCS62C	S62C	PCS62C	S62C
32	Small Clamp Band	4	P98D	P98D	PC98D	PC98D	P98D	PC98D	P98D	PC98D	P98D
33	Small Clamp Band Bolt	8	S98B	S98B	PCS98B	PCS98B	S98B	PCS98B	S98B	PCS98B	S98B
34	Small Clamp Band Nut	8	S98C	S98C	PCS98C	PCS98C	S98C	PCS98C	S98C	PCS98C	S98C
35	Vertical Bolt	4	104A	104A	PC104A	PC104A	104A	PC104A	104A	PC104A	104A
36	Vertical Bolt Nut	4	S62C	S62C	PCS62C	PCS62C	S62C	PCS62C	S62C	PCS62C	S62C
37	Vertical Bolt Washer	4	104C	104C	PC104C	PC104C	104C	PC104C	104C	PC104C	104C
38	Muffler	1	70D	70D	70D	70D	70D	70D	70D	70D	70D

LUBE-FREE MODEL M1 CHAMP TEFLON®-FITTED

Item	Part Description	Qty. Per Pump	M1/PT *LF* P/N	M1/KT *LF* P/N	M1/PP *LF* P/N	M1/KK *LF* P/N	M1/UO *LF* P/N	M1/UP *LF* P/N	M1/UH *LF* P/N	M1/UC *LF* P/N
1	Air Valve Assembly[1] — Lube-free	1	01-2000-65-200	01-2000-65-200	01-2000-65-200	01-2000-65-200	01-2000-65-200	01-2000-65-200	01-2000-65-200	01-2000-65-200
2	Air Valve End Cap w/Plastic Guide (Top)	1	01-2310-23-200	01-2310-23-200	01-2310-23-200	01-2310-23-200	01-2310-23-200	01-2310-23-200	01-2310-23-200	01-2310-23-200
3	Air Valve End Cap w/o Guide (Bottom)	1	01-2350-23	01-2350-23	01-2350-23	01-2350-23	01-2350-23	01-2350-23	01-2350-23	01-2350-23
4	Air Valve End Cap Cover	2	N/A	N/A	01-2420-55	01-2420-55	N/A	01-2420-55	N/A	01-2420-55
5	Air Valve End Cap Bolt — Lube-free	2	N/A	N/A	01-2450-22-200	01-2450-22-200	N/A	01-2450-22-200	N/A	01-2450-22-200
6	Snap Ring	2	S90T	S90T	S90T	S90T	S90T	S90T	S90T	S90T
7	Buna O-Ring - 115 70 Shore	2	100U	100U	100U	100U	100U	100U	100U	100U
8	Air Valve Gasket	1	01-2600-30	01-2600-30	01-2600-30	01-2600-30	01-2600-48	01-2600-48	01-2600-48	01-2600-48
9	Air Valve Screw	4	101AS	101AS	PC101AS	PC101AS	101AS	PC101AS	101AS	PC101AS
10	Air Valve Screw Nut	4	S62C	S62C	PCS62C	PCS62C	S62C	PCS62C	S62C	PCS62C
11	Muffler Plate	1	P92M	P92M	P92M	P92M	P92M	P92M	P92M	P92M
12	Muffler Plate Gasket	1	01-3500-52	01-3500-52	01-3500-52	01-3500-52	TF92MG	TF92MG	TF92MG	TF92MG
13	Polypropylene Center Section[2] — Lube-free	1	01-3150-20-200	01-3150-20-200	01-3150-20-200	01-3150-20-200	01-3150-20-200	01-3150-20-200	01-3150-20-200	01-3150-20-200
14	Buna O-Ring - 115 70 Shore	4	100U	100U	100U	100U	100U	100U	100U	100U
	Slipper Seal (Not shown)	4	01-3210-55-200	01-3210-55-200	01-3210-55-200	01-3210-55-200	01-3210-55-200	01-3210-55-200	01-3210-55-200	01-3210-55-200
15	Shaft[2]	1	01-4000-09[2]	01-4000-09[2]	01-4000-09[2]	01-4000-09[2]	01-4000-09[2]	01-4000-09[2]	01-4000-09[2]	01-4000-09[2]
16	Shaft Stud[1]	2	N/A	N/A	N/A	N/A	N/A	N/A	N/A	N/A
17	Piston, Outer	2	P99B	K99B	P99B	K99B	PF99B	PF99B	PF99B	PF99B
18	Piston, Inner	2	P99C	P99C	P99C	P99C	P99C	P99C	P99C	P99C
19	Liquid Chamber	2	P95	K95	P95	K95	PF95	PF95	PF95	PF95
20	Discharge Manifold Elbow	2	P96	K96	P96	K96	PF96	PF96	PF96	PF96
21	Inlet Manifold Elbow	2	P97	K97	P97	K97	PF97	PF97	PF97	PF97
22	Manifold Tee Section (Female, Threaded)	2	P98	K98	P98	K98	PF98	PF98	PFT98	PFT98
23	Manifold O-Ring	4	TFE98B	TFE98BV	TFE98B	TFE98BV	TFE98BV	TFE98BV	TFE98BV	TFE98BV
24	Valve Ball	4	TF111	TF111	TF111	TF111	TF111	TF111	TF111	TF111
25	Valve Seats	4	KT110	KT110	KT110	KT110	PF110	PF110	PF110	PF110
26	Valve Seat O-Ring	8	TFE110B	TFE110BV	TFE110B	TFE110BV	TFE110BV	TFE110BV	TFE110BV	TFE110BV
27	Diaphragm	2	TF93	TF93	TF93	TF93	TF93	TF93	TF93	TF93
28	Back-up Diaphragm	2	TF93B	TF93B	TF93B	TF93B	TF93B	TF93B	TF93B	TF93B
29	Large Clamp Band	2	P94	P94	PC94	PC94	P94	PC94	P94	PC94
30	Large Clamp Band Bolt	4	S94B	S94B	PCS94B	PCS94B	S94B	PCS94B	S94B	PCS94B
31	Large Clamp Band Nut	4	S62C	S62C	PCS62C	PCS62C	S62C	PCS62C	S62C	PCS62C
32	Small Clamp Band	4	P98D	P98D	PC98D	PC98D	P98D	PC98D	P98D	PC98D
33	Small Clamp Band Bolt	8	S98B	S98B	PCS98B	PCS98B	S98B	PCS98B	S98B	PCS98B
34	Small Clamp Band Nut	8	S98C	S98C	PCS98C	PCS98C	S98C	PCS98C	S98C	PCS98C
35	Vertical Bolt	4	104A	104A	PC104A	PC104A	104A	PC104A	104A	PC104A
36	Vertical Bolt Nut	4	S62C	S62C	PCS62C	PCS62C	S62C	PCS62C	S62C	PCS62C
37	Vertical Bolt Washer	4	104C	104C	PC104C	PC104C	104C	PC104C	104C	PC104C
38	Muffler	1	70D	70D	70D	70D	70D	70D	70D	70D

*Refer to corresponding elastomer chart for correct part numbers.
[1]Shaft stud is molded into outer piston on all plastic pumps.
[2]Refer to pages 22-23 prior to ordering these parts.

SECTIONS 7C, 7D, 7E, 7F

EXPLODED VIEWS

M1 METAL — SOLENOID-OPERATED
M1 CHAMP — SOLENOID-OPERATED
M1 ELASTOMER OPTIONS
M1 ULTRAPURE III

M1 METAL SOLENOID-OPERATED

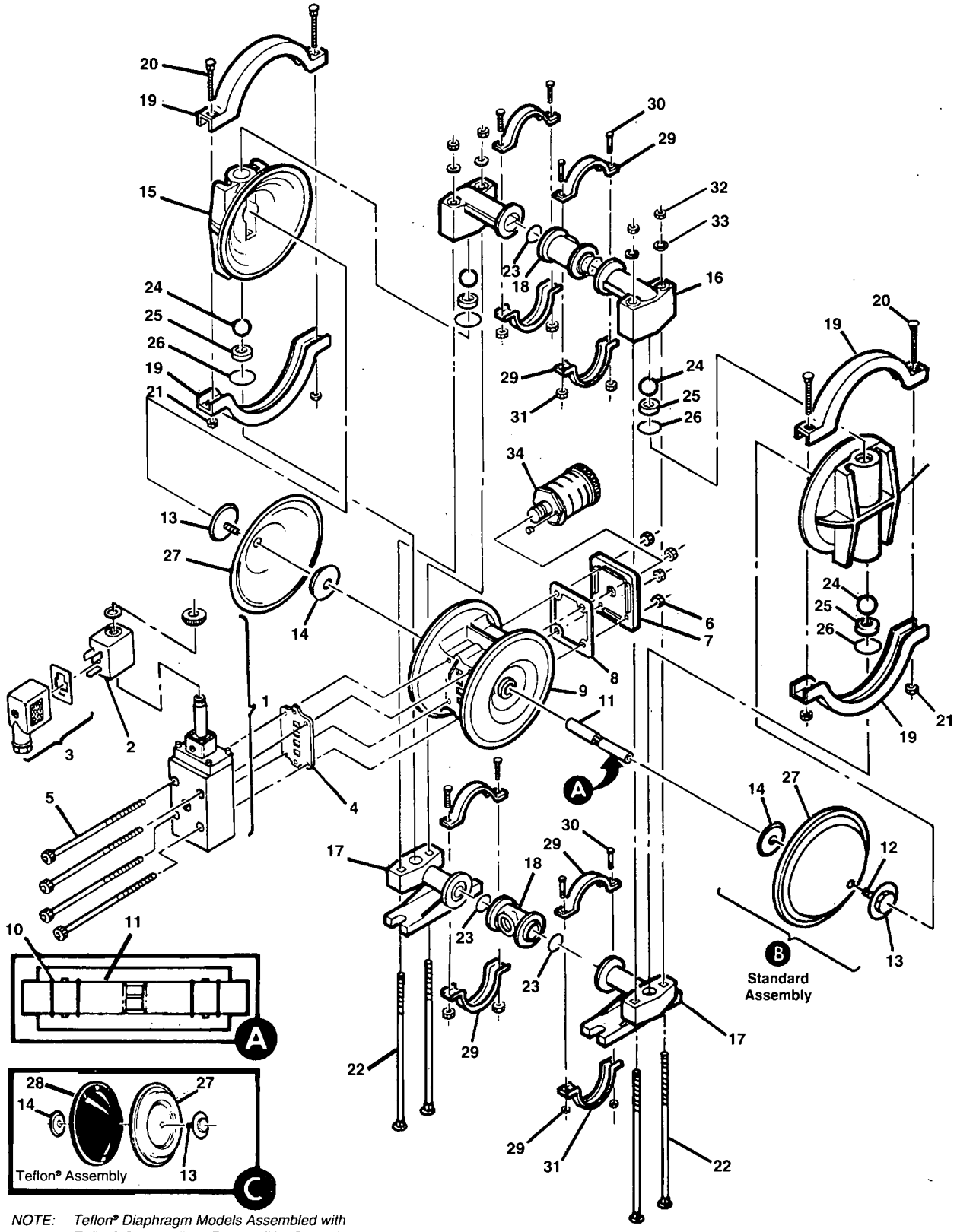

NOTE: Teflon® Diaphragm Models Assembled with Teflon® Gasket Kit At Factory (Not Shown)

METAL MODEL M1 SOLENOID-OPERATED — DC

Food Processing

Item	Part Description	Qty. Per Pump	M1/OOE P/N	M1/TOE P/N	M1/SOE P/N	M1/STE P/N	M1/SGE P/N	M1/SNE P/N
	24 Volt DC Valve Assembly	1	01-2040-99	01-2040-99	01-2040-99	01-2040-99	01-2040-99	01-2040-99
1	Main Valve Body	1	01-2040-01	01-2040-01	01-2040-01	01-2040-01	01-2040-01	01-2040-01
2	24 Volt DC Coil	1	00-2120-99	00-2120-99	00-2120-99	00-2120-99	00-2120-99	00-2120-99
3	Terminal Connector	1	00-2130-99	00-2130-99	00-2130-99	00-2130-99	00-2130-99	00-2130-99
4	Air Valve Gasket	1	01-2600-30	01-2600-30	01-2600-30	01-2600-30	01-2600-30	01-2600-30
5	Air Valve Cap Screw	4	101AS	101AS	101AS	101AS	101AS	101AS
6	Air Valve Cap Screw Nut	4	S62C	S62C	S62C	S62C	S62C	S62C
7	Muffler Plate	1	P92MN	P92MN	P92MN	P92MN	P92MN	P92MN
8	Muffler Plate Gasket	1	P92MG	P92MG	P92MG	P92MG	P92MG	P92MG
9	Center Section	1	01-3151-23	01-3151-23	01-3151-23	01-3151-23	01-3151-23	01-3151-23
10	Center Block O-Ring	4	01-3200-52	10-3200-52	10-3200-52	10-3200-52	01-3200-52	01-3200-52
11	Shaft	1	01-4000-09	01-4000-09	01-4000-09	01-4000-09	01-4000-09	01-4000-09
12	Shaft Stud	2	101F	101F	101F	101F	101F	101F
13	Pistons/Outer	2	99B	99B	S99B	S99B	S99B	S99B
14	Pistons/Inner	2	01-3710-01-100	01-3710-01-100	01-3710-01-100	01-3710-01-100	01-3710-01-100	01-3710-01-100
15	Water Chamber	2	95	95	S95	S95	S95	S95
16	Discharge Manifold Elbow	2	96	96	S96	S96	S96	S96
17	Inlet Manifold Elbow	2	97	97	S97	S97	S97	S97
18	Manifold "T" Section	2	98	98	S98	S98	01-6170-03	01-6170-03
19	Clamp Band (Large)	2	P94	P94	P94	P94	SG94	SG94
20	Large Clamp Band Bolt	4	S94B	S94B	S94B	S94B	S94B	S94B
21	Large Clamp Band Nut	4	S62C	S62C	S62C	S62C	SP69WN	SP69WN
22	Vertical Bolt	4	104A	104A	104A	104A	104A	104A
23	Manifold O-Ring	4	*	PT98B	*	PT98B	01-6320-56	PT98B
24	Valve Ball	4	*	TF111	*	TF111	01-1080-56	TF111
25	Valve Seat	4	A110	A110	S110	S110	S110	S110
26	Valve Seat O-Ring	4	*	PT110B	*	PT110B	01-1200-56	PT110B
27	Diaphragm	2	*	TF93	*	TF93	01-1010-56	TF93
28	Back-up Diaphragm	2	N/R	TF93B	N/R	TF93B	N/R	TF93B
29	Clamp Band (Small)	4	P98D	P98D	P98D	P98D	P98D	P98D
30	Small Clamp Band Bolt	8	S98B	S98B	S98B	S98B	S98B	S98B
31	Small Clamp Band Nut	8	S98C	S98C	S98C	S98C	S98C	S98C
32	Vertical Bolt Nut	4	S62C	S62C	S62C	S62C	S62C	S62C
33	Vertical Bolt Washer	4	104C	104C	104C	104C	104C	104C
34	Muffler	1	70D	70D	70D	70D	70D	70D

*Refer to page 43 for elastomer options.

METAL MODEL M1 SOLENOID-OPERATED — AC

Food Processing

Item	Part Description	Qty. Per Pump	M1/OOI P/N	M1/TOI P/N	M1/SOI P/N	M1/STI P/N	M1/SGI P/N	M1/SNI P/N
	24 Volt AC Valve Assembly	1	01-2060-99	01-2060-99	01-2060-99	01-2060-99	01-2060-99	01-2060-99
1	Main Valve Body	1	01-2040-01	01-2040-01	01-2040-01	01-2040-01	01-2040-01	01-2040-01
2	24 Volt AC Coil	1	00-2110-99	00-2110-99	00-2110-99	00-2110-99	00-2110-99	00-2110-99
3	Terminal Connector	1	00-2130-99	00-2130-99	00-2130-99	00-2130-99	00-2130-99	00-2130-99
4	Air Valve Gasket	1	01-2600-30	01-2600-30	01-2600-30	01-2600-30	01-2600-30	01-2600-30
5	Air Valve Cap Screw	4	101AS	101AS	101AS	101AS	101AS	101AS
6	Air Valve Cap Screw Nut	4	S62C	S62C	S62C	S62C	S62C	S62C
7	Muffler Plate	1	P92MN	P92MN	P92MN	P92MN	P92MN	P92MN
8	Muffler Plate Gasket	1	P92MG	P92MG	P92MG	P92MG	P92MG	P92MG
9	Center Section	1	01-3151-23	01-3151-23	01-3151-23	01-3151-23	01-3151-23	01-3151-23
10	Center Block O-Ring	4	01-3200-52	10-3200-52	10-3200-52	10-3200-52	01-3200-52	01-3200-52
11	Shaft	1	01-4000-09	01-4000-09	01-4000-09	01-4000-09	01-4000-09	01-4000-09
12	Shaft Stud	2	101F	101F	101F	101F	101F	101F
13	Pistons/Outer	2	99B	99B	S99B	S99B	S99B	S99B
14	Pistons/Inner	2	01-3710-01-100	01-3710-01-100	01-3710-01-100	01-3710-01-100	01-3710-01-100	01-3710-01-100
15	Water Chamber	2	95	95	S95	S95	S95	S95
16	Discharge Manifold Elbow	2	96	96	S96	S96	S96	S96
17	Inlet Manifold Elbow	2	97	97	S97	S97	S97	S97
18	Manifold "T" Section	2	98	98	S98	S98	01-6170-03	01-6170-03
19	Clamp Band (Large)	2	P94	P94	P94	P94	SG94	SG94
20	Large Clamp Band Bolt	4	S94B	S94B	S94B	S94B	S94B	S94B
21	Large Clamp Band Nut	4	S62C	S62C	S62C	S62C	SP69WN	SP69WN
22	Vertical Bolt	4	104A	104A	104A	104A	104A	104A
23	Manifold O-Ring	4	*	PT98B	*	PT98B	01-6320-56	PT98B
24	Valve Ball	4	*	TF111	*	TF111	01-1080-56	TF111
25	Valve Seat	4	A110	A110	S110	S110	S110	S110
26	Valve Seat O-Ring	4	*	PT110B	*	PT110B	01-1200-56	PT110B
27	Diaphragm	2	*	TF93	*	TF93	01-1010-56	TF93
28	Back-up Diaphragm	2	N/R	TF93B	N/R	TF93B	N/R	TF93B
29	Clamp Band (Small)	4	P98D	P98D	P98D	P98D	P98D	P98D
30	Small Clamp Band Bolt	8	S98B	S98B	S98B	S98B	S98B	S98B
31	Small Clamp Band Nut	8	S98C	S98C	S98C	S98C	S98C	S98C
32	Vertical Bolt Nut	4	S62C	S62C	S62C	S62C	S62C	S62C
33	Vertical Bolt Washer	4	104C	104C	104C	104C	104C	104C
34	Muffler	1	70D	70D	70D	70D	70D	70D

*Refer to page 43 for elastomer options.

M1 CHAMP SOLENOID-OPERATED

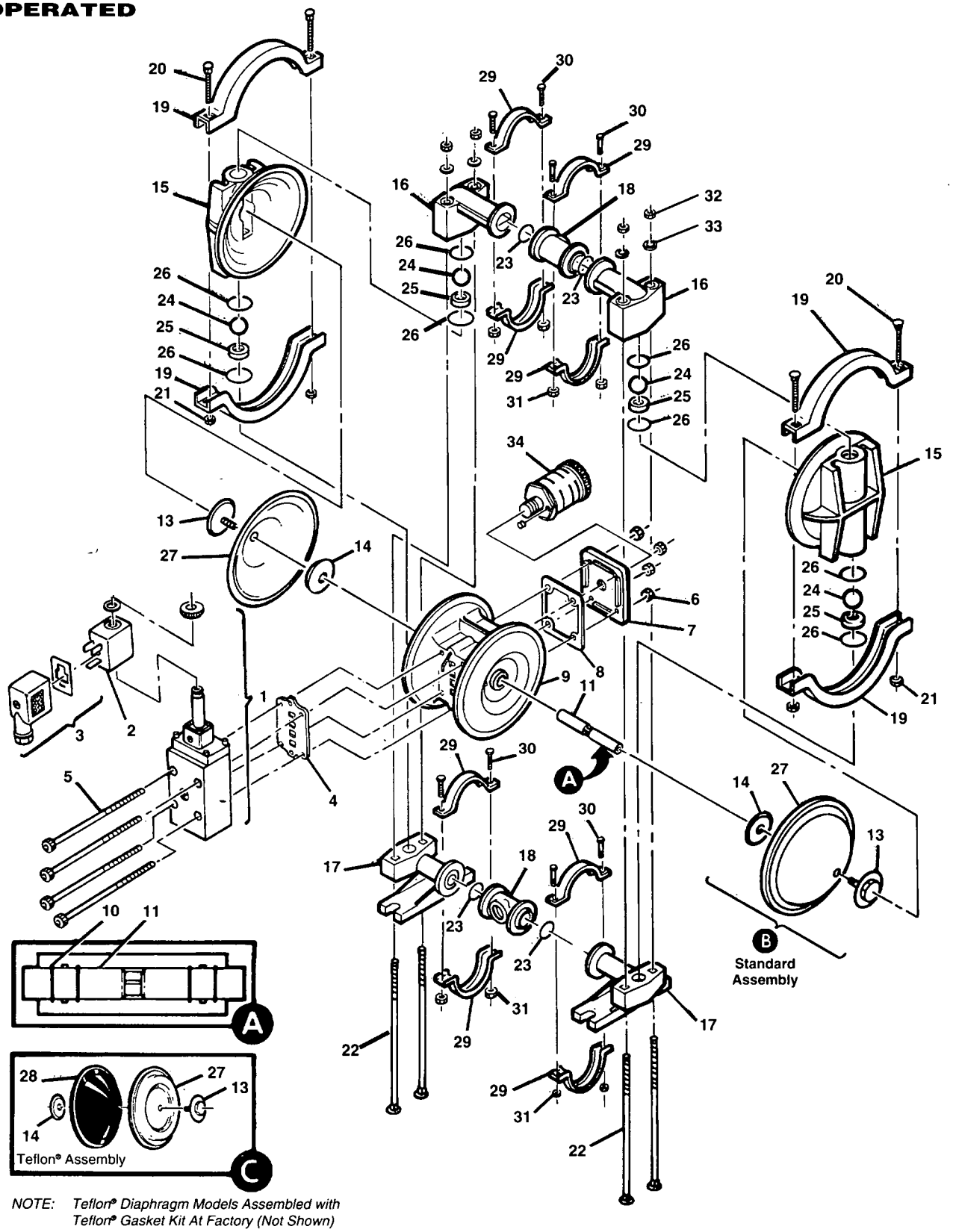

NOTE: Teflon® Diaphragm Models Assembled with Teflon® Gasket Kit At Factory (Not Shown)

PLASTIC MODEL M1 SOLENOID-OPERATED — DC (RUBBER/TPE-FITTED)

Item	Part Description	Qty. Per Pump	M1/POE P/N	M1/KOE P/N
	24 Volt DC Valve Assembly	1	01-2040-99	01-2040-99
1	Main Valve Body	1	01-2040-01	01-2040-01
2	24 Volt DC Coil	1	00-2120-99	00-2120-99
3	Terminal Connector	1	00-2130-99	00-2130-99
4	Air Valve Gasket	1	01-2600-30	01-2600-30
5	Air Valve Screw	4	101AS	101AS
6	Air Valve Screw Nut	4	S62C	S62C
7	Muffler Plate	1	P92M	P92M
8	Muffler Plate Gasket	1	P92MG	P92MG
9	Center Section	1	01-3151-20	01-3151-20
10	Center Block O-Ring	4	01-3200-52	01-3200-52
11	Shaft	1	01-4000-09	01-4000-09
12	Shaft Stud	2	N/A	N/A
13	Piston, Outer	2	P99B	K99B
14	Piston, Inner	2	01-3710-01-100	01-3710-01-100
15	Liquid Chamber	2	P95	K95
16	Discharge Manifold Elbow	2	P96	K96
17	Inlet Manifold Elbow	2	P97	K97
18	Manifold Tee Section (Female, Threaded)	2	P98	K98
19	Large Clamp Band	2	P94	P94
20	Large ClampBand Bolt	4	S94B	S94B
21	Large Clamp Band Nut	4	S62C	S62C
22	Vertical Bolt	4	104A	104A
23	Manifold O-Ring	4	*	*
24	Valve Ball	4	*	*
25	Valve Seats	4	KT110	KT110
26	Valve Seat O-Ring	8	*	*
27	Diaphragm	2	*	*
28	Back-up Diaphragm	2	N/A	N/A
29	Small Clamp Band	4	P98D	P98D
30	Small Clamp Band Bolt	8	S98B	S98B
31	Small Clamp Band Nut	8	S98C	S98C
32	Vertical Bolt Nut	4	S62C	S62C
33	Vertical Bolt Washer	4	104C	104C
34	Muffler	1	70D	70D

PLASTIC MODEL M1 SOLENOID-OPERATED — AC (RUBBER/TPE-FITTED)

Item	Part Description	Qty. Per Pump	M1/POI P/N	M1/KOI P/N
	24 Volt AC Valve Assembly	1	01-2060-99	01-2060-99
1	Main Valve Body	1	01-2040-01	01-2040-01
2	24 Volt AC Coil	1	00-2110-99	01-2110-99
3	Terminal Connector	1	00-2130-99	01-2130-99
4	Air Valve Gasket	1	01-2600-30	01-2600-30
5	Air Valve Screw	4	101AS	101AS
6	Air Valve Screw Nut	4	S62C	S62C
7	Muffler Plate	1	P92M	P92M
8	Muffler Plate Gasket	1	P92MG	P92MG
9	Center Section	1	01-3151-20	01-3151-20
10	Center Block O-Ring	4	01-3200-52	01-3200-52
11	Shaft	1	01-4000-09	01-4000-09
12	Shaft Stud	2	N/A	N/A
13	Piston, Outer	2	P99B	K99B
14	Piston, Inner	2	01-3710-01-100	01-3710-01-100
15	Liquid Chamber	2	P95	K95
16	Discharge Manifold Elbow	2	P96	K96
17	Inlet Manifold Elbow	2	P97	K97
18	Manifold Tee Section (Female, Threaded)	2	P98	K98
19	Large Clamp Band	2	P94	P94
20	Large ClampBand Bolt	4	S94B	S94B
21	Large Clamp Band Nut	4	S62C	S62C
22	Vertical Bolt	4	104A	104A
23	Manifold O-Ring	4	*	*
24	Valve Ball	4	*	*
25	Valve Seats	4	KT110	KT110
26	Valve Seat O-Ring	8	*	*
27	Diaphragm	2	*	*
28	Back-up Diaphragm	2	N/A	N/A
29	Small Clamp Band	4	P98D	P98D
30	Small Clamp Band Bolt	8	S98B	S98B
31	Small Clamp Band Nut	8	S98C	S98C
32	Vertical Bolt Nut	4	S62C	S62C
33	Vertical Bolt Washer	4	104C	104C
34	Muffler	1	70D	70D

*Refer to page 43 for elastomer options.

PLASTIC MODEL M1 SOLENOID-OPERATED — DC (TEFLON®-FITTED)

Item	Part Description	Qty. Per Pump	M1/PTE P/N	M1/KTE P/N	M1/UOE P/N	M1/UPE P/N
	24 Volt DC Valve Assembly	1	01-2040-99	01-2040-99	01-2040-99	01-2040-99
1	Main Valve Body	1	01-2040-01	01-2040-01	01-2040-01	01-2040-01
2	24 Volt DC Coil	1	00-2120-99	00-2120-99	00-2120-99	00-2120-99
3	Terminal Connector	1	00-2130-99	00-2130-99	00-2130-99	00-2130-99
4	Air Valve Gasket	1	01-2600-30	01-2600-30	01-2600-30	01-2600-30
5	Air Valve Screw	4	101AS	101AS	101AS	PC101AS
6	Air Valve Screw Nut	4	S62C	S62C	S62C	PCS62C
7	Muffler Plate	1	P92M	P92M	P92M	P92M
8	Muffler Plate Gasket	1	P92MG	P92MG	P92MG	P92MG
9	Center Section	1	01-3151-20	01-3151-20	01-3151-20	01-3151-20
10	Center Block O-Ring	4	01-3200-52	01-3200-52	01-3200-52	01-3200-52
11	Shaft	1	01-4000-09	01-4000-09	01-4000-09	01-4000-09
12	Shaft Stud	2	N/A	N/A	N/A	N/A
13	Piston, Outer	2	P99B	K99B	PF99B	PF99B
14	Piston, Inner	2	01-3710-01-100	01-3710-01-100	01-3710-01-100	01-3710-01-100
15	Liquid Chamber	2	P95	K95	PF95	PF95
16	Discharge Manifold Elbow	2	P96	K96	PF96	PF96
17	Inlet Manifold Elbow	2	P97	K97	PF97	PF97
18	Manifold Tee Section (Female, Threaded)	2	P98	K98	PF98	PF98
19	Large Clamp Band	2	P94	P94	P94	PC94
20	Large Clamp Band Bolt	4	S94B	S94B	S94B	PCS94B
21	Large Clamp Band Nut	4	S62C	S62C	S62C	PCS62C
22	Vertical Bolt	4	104A	104A	104A	PC104A
23	Manifold O-Ring	4	TFE98B	TFE98BV	TFE98BV	TFE98BV
24	Valve Ball	4	TF111	TF111	TF111	TF111
25	Valve Seats	4	KT110	KT110	PF110	PF110
26	Valve Seat O-Ring	8	TFE110B	TFE110BV	TFE110BV	TFE110BV
27	Diaphragm	2	TF93	TF93	TF93	TF93
28	Back-up Diaphragm	2	TF93B	TF93B	TF93B	TF93B
29	Small Clamp Band	4	P98D	P98D	P98D	PC98D
30	Small Clamp Band Bolt	8	S98B	S98B	S98B	PCS98B
31	Small Clamp Band Nut	8	S98C	S98C	S98C	PCS98C
32	Vertical Bolt Nut	4	S62C	S62C	S62C	PCS62C
33	Vertical Bolt Washer	4	104C	104C	104C	PC104C
34	Muffler	1	70D	70D	70D	70D

PLASTIC MODEL M1 SOLENOID-OPERATED — AC (TEFLON®-FITTED)

Item	Part Description	Qty. Per Pump	M1/PTI P/N	M1/KTI P/N	M1/UOI P/N	M1/UPI P/N
	24 Volt AC Valve Assembly	1	01-2060-99	01-2060-99	01-2060-99	01-2060-99
1	Main Valve Body	1	01-2040-01	01-2040-01	01-2040-01	01-2040-01
2	24 Volt AC Coil	1	01-2110-99	01-2110-99	01-2110-99	01-2110-99
3	Terminal Connector	1	01-2130-99	01-2130-99	01-2130-99	01-2130-99
4	Air Valve Gasket	1	01-2600-30	01-2600-30	01-2600-48	01-2600-48
5	Air Valve Screw	4	101AS	101AS	101AS	PC101AS
6	Air Valve Screw Nut	4	S62C	S62C	S62C	PCS62C
7	Muffler Plate	1	P92M	P92M	P92M	P92M
8	Muffler Plate Gasket	1	P92MG	P92MG	01-3500-48	01-3500-48
9	Center Section	1	01-3151-20	01-3151-20	01-3151-20	01-3151-20
10	Center Block O-Ring	4	01-3200-52	01-3200-52	01-3200-52	01-3200-52
11	Shaft	1	01-4000-09	01-4000-09	01-4000-09	01-4000-09
12	Shaft Stud	2	N/A	N/A	N/A	N/A
13	Piston, Outer	2	P99B	K99B	PF99B	PF99B
14	Piston, Inner	2	01-3710-01-100	01-3710-01-100	01-3710-01-100	01-3710-01-100
15	Liquid Chamber	2	P95	K95	PF95	PF95
16	Discharge Manifold Elbow	2	P96	K96	PF96	PF96
17	Inlet Manifold Elbow	2	P97	K97	PF97	PF97
18	Manifold Tee Section (Female, Threaded)	2	P98	K98	PF98	PF98
19	Large Clamp Band	2	P94	P94	P94	PC94
20	Large Clamp Band Bolt	4	S94B	S94B	S94B	PCS94B
21	Large Clamp Band Nut	4	S62C	S62C	S62C	PCS62C
22	Vertical Bolt	4	104A	104A	104A	PC104A
23	Manifold O-Ring	4	TFE98B	TFE98BV	TFE98BV	TFE98BV
24	Valve Ball	4	TF111	TF111	TF111	TF111
25	Valve Seats	4	KT110	KT110	PF110	PF110
26	Valve Seat O-Ring	8	TFE110B	TFE110BV	TFE110BV	TFE110BV
27	Diaphragm	2	TF93	TF93	TF93	TF93
28	Back-up Diaphragm	2	TF93B	TF93B	TF93B	TF93B
29	Small Clamp Band	4	P98D	P98D	P98D	PC98D
30	Small Clamp Band Bolt	8	S98B	S98B	S98B	PCS98B
31	Small Clamp Band Nut	8	S98C	S98C	S98C	PCS98C
32	Vertivcal Bolt Nut	4	S62C	S62C	S62C	PCS62C
33	Vertical Bolt Washer	4	104C	104C	104C	PC104C
34	Muffler	1	70D	70D	70D	70D

SECTION 7E

ELASTOMERS FOR M1 CHAMP MODELS

MATERIAL	MANIFOLD O-RINGS (4) ITEM #23	VALVE BALLS (4) ITEM #24	VALVE SEATS (4) ITEM #25	VALVE SEAT O-RINGS (8) ITEM #26	DIAPHRAGMS (2) ITEM #27
Polyurethane	01-6320-50	01-1080-50	N/A	01-1200-50	PU93
Buna N	BN98B	BN111	N/A	BN110B	BN93
Viton	N/A	VT111	VT110/110KR	N/A	01-1010-53
Wil-Flex™	01-6320-58	01-1080-58	N/A	01-1200-58	01-1010-58
Saniflex	01-6320-56	01-1080-56	N/A	01-1200-56	01-1010-56
Teflon® PTFE	N/A	TF111	PF110	N/A	TF93
PVDF	N/A	N/A	KT110	N/A	N/A
Teflon® Encapsulated/ Silicon	TFE98B	N/A	N/A	TFE110B	N/A
Teflon® Encapsulated/ Viton	TFE98BV	N/A	N/A	TFE110BV	N/A

ELASTOMERS FOR M1 METAL MODELS

MATERIAL	MANIFOLD O-RINGS (4) ITEM #28	VALVE BALLS (4) ITEM #25	VALVE SEATS (4) ITEM #26	VALVE SEAT O-RINGS (8) ITEM #27	DIAPHRAGMS (2) ITEM #24
Polyurethane	01-6320-50	01-1080-50	N/A	01-1200-50	PU93
Buna N	BN98B	BN111	N/A	BN110B	BN93
Viton	N/A	VT111		N/A	01-1010-53
Wil-Flex™	01-6320-58	01-1080-58	N/A	01-1200-58	01-1010-58
Saniflex	01-6320-56	01-1080-56	N/A	01-1200-56	01-1010-56
Teflon® PTFE	PT98B	TF111	N/A	PT110	TF93
Stainless Steel	N/A	N/A	S110	N/A	N/A
Aluminum	N/A	N/A	A110	N/A	N/A

TORQUE SPECIFICATIONS FOR MODEL M1 (PLASTIC AND METAL)

ITEM #	DESCRIPTION OF PART	MAXIMUM TORQUE
1	Air Valve, Lubed & Solenoid	20 in.-lbs. [2.3 m-N]
2	Air Valve — Lubed (UPI & UPII, PFA pumps only)	30 in.-lbs. [3.4 m-N]
3	Air Valve — Lube-Free	10 in.-lbs. [1.1 m-N]
4	Outer Piston	75 in.-lbs. [8.7 m-N]
5	Outer Piston (PFA only)	50 in.-lbs. [5.6 m-N]
6	Small Clamp Band	15 in.-lbs. [1.7 m-N]
7	Small Clamp Bands (All PFA pumps)	30 in.-lbs. [3.4 m-N]
8	Large Clamp Band (Rubber-Fitted)	65 in.-lbs. [7.4 m-N]
9	Large Clamp Band (Teflon-Fitted)	85 in.-lbs. [9.6 m-N]
10	Vertical Bolts (Metal Pump)	125 in.-lbs. [14.1 m-N]
11	Vertical Bolts (Kynar [rubber only], all poly)	50 in.-lbs. [5.6 m-N]
12	Vertical Bolts (Kynar and PFA — Teflon-Fitted)	25 in.-lbs. [2.8 m-N]

M1
ULTRAPURE III

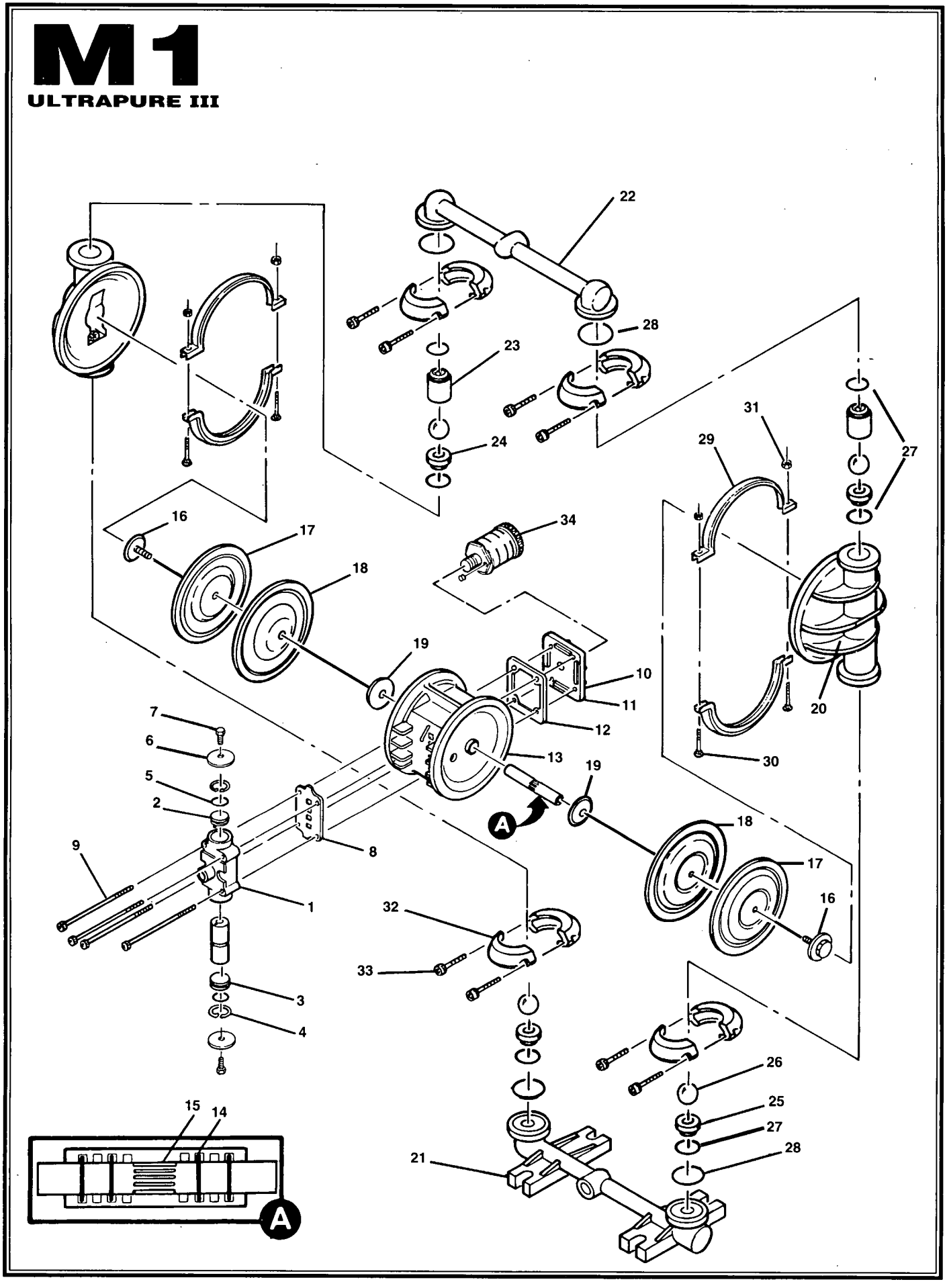

MODEL M1 ULTRAPURE III TEFLON®-FITTED

Item	Part Description	Qty. Per Pump	M1/UOIII *LF* P/N	M1/UPIII *LF* P/N	M1/UHIII *LF* P/N	M1/UCIII *LF* P/N
1	Air Valve Assembly — Lube-free	1	01-2000-65-200	01-2000-65-200	01-2000-65-200	01-2000-65-200
2	Air Valve End Cap w/Plastic Guide	1	01-2310-23-200	01-2310-23-200	01-2310-23-200	01-2310-23-200
3	Air Valve End Cap w/o Guide	1	01-2350-23	01-2350-23	01-2350-23	01-2350-23
4	Snap Ring	2	S90T	S90T	S90T	S90T
5	Buna O-Ring - 115 70 Shore	2	100U	100U	100U	100U
6	End Cap Cover	2	N/A	01-2420-55	N/A	01-2420-55
7	End Cap Bolt	2	N/A	01-2450-22-200	N/A	01-2450-22-200
8	Air Valve Gasket	1	01-2600-48	01-2600-48	01-2600-48	01-2600-48
9	Air Valve Cap Screws	4	101AS	PC101AS	101AS	PC101AS
10	Air Valve Nut	4	S62C	PCS62C	S62C	PCS62C
11	Muffler Plate	1	P92M	P92M	P92M	P92M
12	Muffler Plate Gasket	1	TF92MG	TF92MG	TF92MG	TF92MG
13	Polypropylene Center Section — Lube-free	11	01-3150-20-200	01-3150-20-200	01-3150-20-200	01-3150-20-200
	Slipper Seal (Not shown)	4	01-3210-55-200	01-3210-55-200	01-3210-55-200	01-3210-55-200
14	Buna O-Ring - 115 70 Shore	4	100U	100U	100U	100U
15	Shaft	1	01-4000-09	01-4000-09	01-4000-09	01-4000-09
16	Outer Piston	2	PF99B	PF99B	PF99B	PF99B
17	Teflon® PTFE Primary Diaphragm	2	TF93	TF93	TF93	TF93
18	Buna-N Back-up Diaphragm	2	01-1060-61	01-1060-61	01-1060-61	01-1060-61
19	Inner Piston	2	P99C	P99C	P99C	P99C
20	Water Chamber	2	01-6010-22	01-6010-22	01-6010-22	01-6010-22
21	Inlet Manifold	1	01-6090-22	01-6090-22	01-6140-22	01-6140-22
22	Discharge Manifold	1	01-6020-22	01-6020-22	01-6050-22	01-6050-22
23	Ball Cage	2	01-6400-22	01-6400-22	01-6400-22	01-6400-22
24	Valve Seat (Top)	2	01-1140-55	01-1140-55	01-1140-55	01-1140-55
25	Valve Seat (Bottom)	2	01-1160-55	01-1160-55	01-1160-55	01-1160-55
26	Valve Ball	4	TF111	TF111	TF111	TF111
27	Chemraz® Valve Seat O-Ring	6	01-1240-33	01-1240-33	01-1240-33	01-1240-33
28	Chemraz® Outboard O-Ring	4	01-1370-33	01-1370-33	01-1370-33	01-1370-33
29	Large Clamp Band	2	01-7390-03	01-7390-05	01-7390-03	01-7390-05
30	Large Carriage Bolt	4	S94B	PCS94B	S94B	PCS94B
31	Large Hex Nut	4	S62C	PCS62C	S62C	PCS62C
32	Small Clamp Band	4	01-7350-03	01-7350-05	01-7350-03	01-7350-05
33	Small Cap Screw	8	01-7370-03	01-7370-05	01-7370-03	01-7370-05
34	Muffler	1	70D	70D	70D	70D

M1/UOIII — Teflon® PFA with Teflon® PTFE elastomers, female threaded inlet/discharge connections and standard hardware.
M1/UPIII — Teflon® PFA with Teflon® PTFE elastomers, female threaded inlet/discharge connections and Teflon®-coated hardware.
M1/UHIII — Teflon® PFA with Teflon® PTFE elastomers, male non-threaded inlet/discharge connections and standard hardware.
M1/UCIII — Teflon® PFA with Teflon® PTFE elastomers, male non-threaded inlet/discharge connections and Teflon®-coated hardware.

WILDEN'S SPECIALTY PUMPS

M8 STALLION

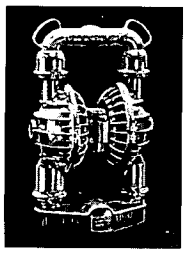

2" inlet. Solids clearance up to ¾". Built to handle rough treatment: cast-in handles for easy portability, reinforced shaft and high impact polyurethane base.

SOLENOID-OPERATED

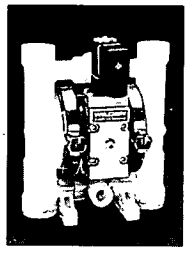

Each stroke of this pump is controlled by electrical impulses making it ideal for batching, metering, and other electrically controlled dispensing applications.

M1 ULTRAPURE III

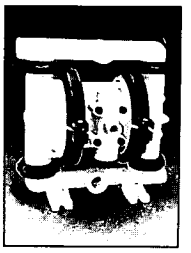

½" inlet. Teflon® PFA construction, temperatures to 300°F. Up to 14 GPM. Materials of construction have been selected to reduce contamination while providing a safer work environment.

FOOD PROCESSING

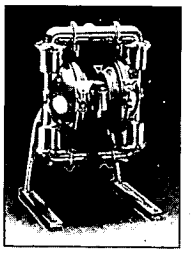

Constructed with FDA approved materials: bead blasted 316 Stainless Steel construction with tri-clamp porting and wing-nut fasteners. Foodmaster™ (pictured) is USDA accepted.

THE WILDEN PUMP LINE

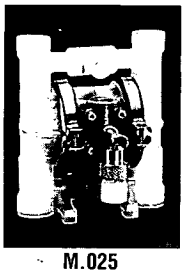

M.025
(CHAMP SERIES)

MODEL M.025

- ¼" Inlet
- 125 Max. PSIG
- Up To 4.5 GPM
- Max. Particle Size: 1/64"

Materials of Construction:
PVDF, Acetal, Polypropylene, Carbon-filled Acetal

Suction Lift:

(Rubber)	Dry: 4.5'
	Wet: 25'
(Teflon®)	Dry: 4.5'
	Wet: 25'

LUBE-FREE AVAILABLE

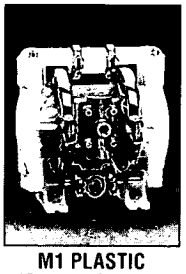

M1 PLASTIC
(CHAMP SERIES)

MODEL M1

- ½" Inlet
- 110 Max. PSIG
- Up To 14 GPM
- Max. Particle Size: 1/16"

Materials of Construction:
Polypropylene, PVDF, Teflon®, Graphite-filled Polypropylene, Aluminum, Stainless Steel

Suction Lift:	Plastic	Metal
(Rubber)	Dry: 10'	10'
	Wet: 25'	25'
(Teflon®)	Dry: 7'	8'
	Wet: 25'	25'

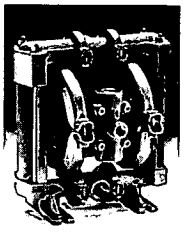

M1 METAL

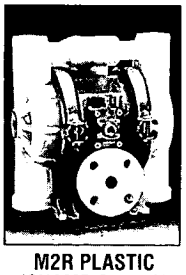

M2R PLASTIC
(CHAMP SERIES)

MODEL M2

- 1" Inlet
- 125 Max. PSIG
- Up To 37 GPM
- Max. Particle Size: ⅛"

Materials of Construction:
Aluminum, Stainless Steel, Hastelloy, Polypropylene, PVDF

Suction Lift:	Plastic	Metal
(Rubber)	Dry: 17'	19'
	Wet: 25'	25'
(Teflon®)	Dry: 7'	8'
	Wet: 25'	25'

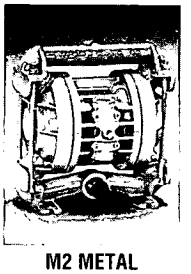

M2 METAL

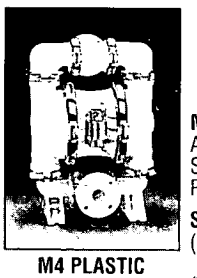

M4 PLASTIC
(CHAMP SERIES)

MODEL M4

- 1½" Inlet
- 125 Max. PSIG
- Up To 73 GPM
- Max. Particle Size: 3/16"

Materials of Construction:
Aluminum, Cast Iron, Stainless Steel, Hastelloy, Polypropylene, PVDF, Teflon® PFA

Suction Lift:	Plastic	Metal
(Rubber)	Dry: 17'	21'
	Wet: 25'	25'
(Teflon®)	Dry: 7'	7'
	Wet: 25'	25'

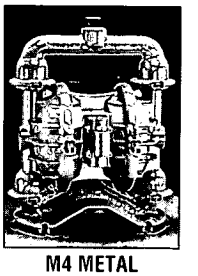

M4 METAL

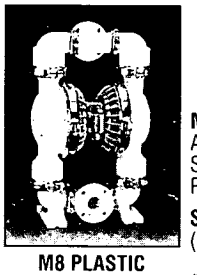

M8 PLASTIC
(CHAMP SERIES)

MODEL M8

- 2" Inlet
- 125 Max. PSIG
- Up To 155 GPM
- Max. Particle Size: ¼"

Materials of Construction:
Aluminum, Cast Iron, Stainless Steel, Hastelloy, PVDF, Polypropylene

Suction Lift:	Plastic	Metal
(Rubber)	Dry: 17'	20'
	Wet: 25'	25'
(Teflon®)	Dry: 8'	8'
	Wet: 25'	25'

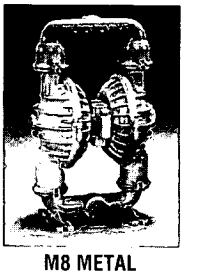

M8 METAL

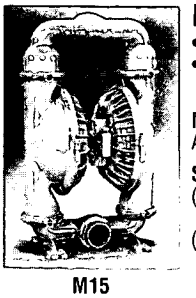

M15

MODEL M15

- 3" Inlet
- 125 Max. PSIG
- Up To 230 GPM
- Max. Particle Size: ⅜"

Materials of Construction:
Aluminum, Cast Iron, Stainless Steel, Hastelloy

Suction Lift:	
(Rubber)	Dry: 17'
	Wet: 25'
(Teflon®)	Dry: 14'
	Wet: 25'

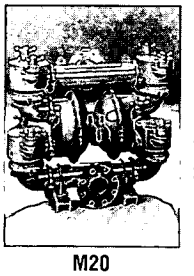

M20

MODEL M20

- 4" Inlet
- 125 Max. PSIG
- Up To 304 GPM
- Max. Particle Size: 1⅜"

Materials of Construction:
Cast Iron

Suction Lift:
Dry: 13'
Wet: 25'

Compressors, dryers and pumps
systems and service

For fu

Kentrol Inc
compressor and pump division
Post Office Box 219, Waterville, Maine 04903-0219
207 873-7741 FAX 207 873-2945

THE INSCO GROUP
Quality Starts Here

WILDEN PUMP & ENGINEERING COMPANY
22069 Van Buren St., Grand Terrace, CA 92313
(909) 422-1730 • FAX (909) 783-3440

WILDEN®

AIR OPERATED DOUBLE DIAPHRAGM PUMPS

M15 Engineering Operation and Maintenance

MODEL M15 METAL

MODEL M15 FOOD PROCESSING

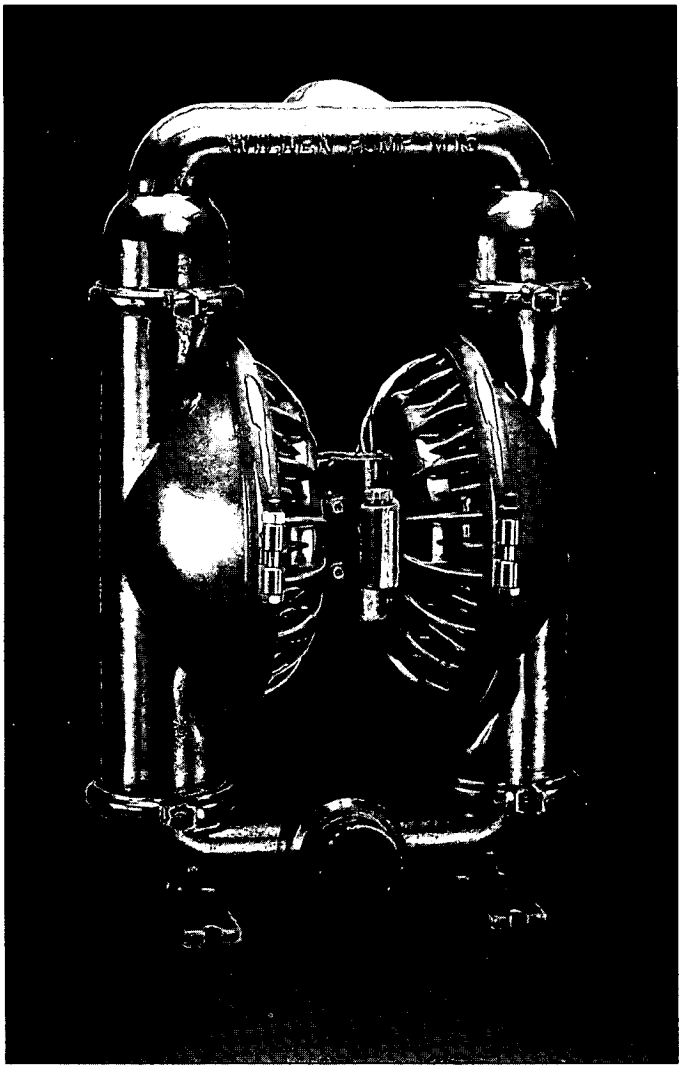

M15 METAL

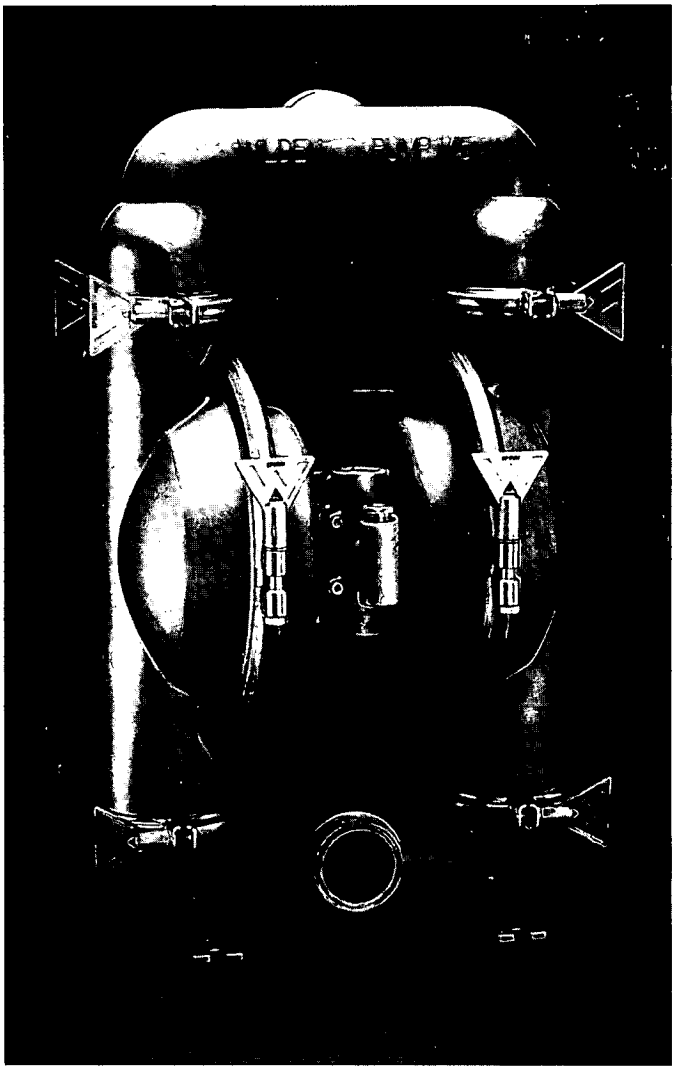

M15 FOOD PROCESSING

COPYRIGHT 1994 WILDEN PUMP & ENGINEERING CO.

RBG P/S-05 9/94
REPLACES 3/94

THE WILDEN PUMP — HOW IT WORKS

The Wilden diaphragm pump is an air-operated, positive displacement, self-priming pump. These drawings show flow pattern through the pump upon its initial stroke. It is assumed the pump has no fluid in it prior to its initial stroke.

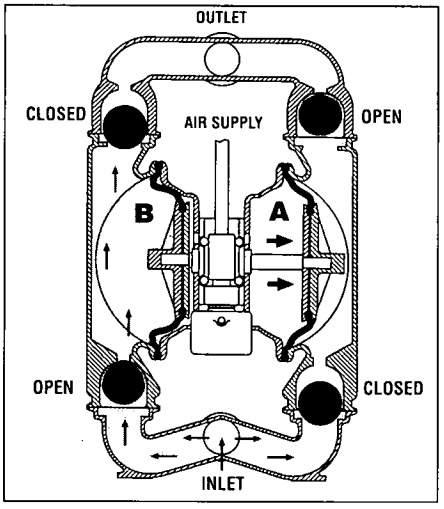

FIGURE 1 The air valve directs pressurized air to the back side of diaphragm A. The compressed air is applied directly to the liquid column separated by elastomer diaphragms. The diaphragm acts as a separation membrane between the compressed air and liquid, balancing the load and removing mechanical stress from the diaphragm which allows for millions of flex cycles. The compressed air moves the diaphragm away from the center block of the pump. The opposite diaphragm is pulled in by the shaft connected to the pressurized diaphragm. Diaphragm B is now on its suction stroke; air behind the diaphragm has been forced out to the atmosphere through the exhaust port of the pump. Diaphragm A is working against atmospheric air pressure. The movement of diaphragm B toward the center block of the pump creates a vacuum within chamber B. Atmospheric pressure forces fluid into the inlet manifold forcing the inlet valve ball off its seat. Liquid is free to move past the inlet valve ball and fill the liquid chamber.

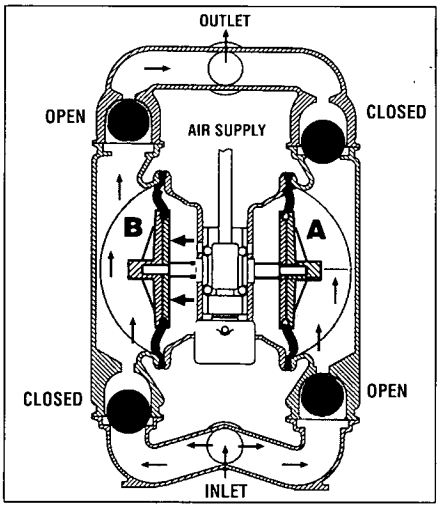

FIGURE 2 When the pressurized diaphragm, diaphragm A, reaches the limit of its discharge stroke, the air valve redirects pressurized air to the back side of diaphragm B. The pressurized air forces diaphragm B away from the center block while pulling diaphragm A to the center block. Diaphragm B is now on its discharge stroke. Diaphragm B forces the inlet valve ball onto its seat due to the hydraulic forces developed in the liquid chamber and manifold of the pump. These same hydraulic forces lift the discharge valve ball off its seat, while the opposite discharge valve ball is forced onto its seat, forcing fluid to flow through the pump discharge. The movement of diaphragm A to the center block of the pump creates a vacuum within liquid chamber A. Atmospheric pressure forces fluid into the inlet manifold of the pump. The inlet valve ball is forced off its seat allowing the fluid being pumped to fill the liquid chamber.

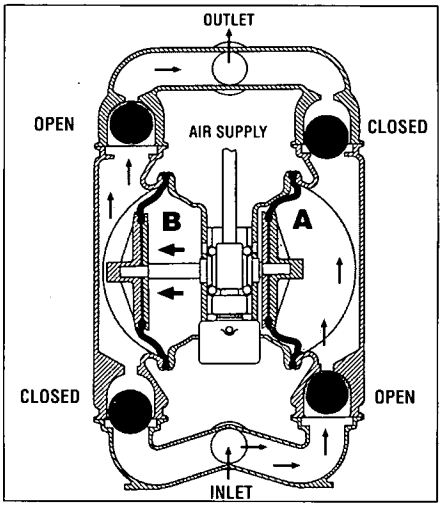

FIGURE 3 At completion of the stroke, the air valve again redirects air to the back side of diaphragm A, which starts diaphragm B on its exhaust stroke. As the pump reaches its original starting point, each diaphragm has gone through one exhaust and one discharge stroke. This constitutes one complete pumping cycle. The pump may take several cycles to completely prime depending on the conditions of the application.

WILDEN PUMP DESIGNATION SYSTEM

XX / XX / XX / XX / XX
1 2 3 4 5 6

1 MODEL (SIZE)
2 WETTED CONSTRUCTION
3 NON-WETTED CONSTRUCTION
4 DIAPHRAGMS
5 VALVE BALLS
6 VALVE SEATS (O-RINGS)

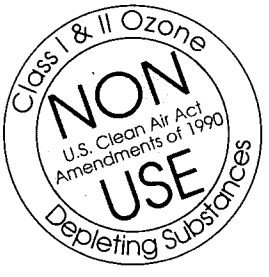

NOTE: UL-listed pumps must not exceed 50 psig air supply pressure.

WARNING: Possible explosion can result from Halogenated Hydrocarbon solvents when used in pressurized fluid systems having aluminum or galvanized wetted parts.

SUGGESTED INSTALLATION

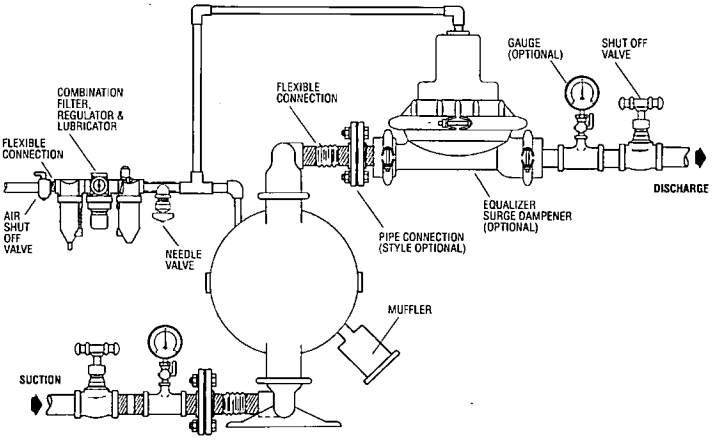

CAUTION: WEAR SAFETY GLASS. WHEN DIAPHRAGM RUPTURE OCCURS, MATERIAL BEING PUMPED MAY BE FORCED OUT AIR EXHAUST.

NOTE: Pump must be lubricated. Wilden suggests an arctic 5 weight oil (ISO grade 15).

WARNING: Prevention of static sparking — If static sparking occurs, fire or explosion could result. Pump, valves, and containers must be grounded when handling flammable fluids and whenever discharge of static electricity is a hazard.

®TEFLON IS A REGISTERED TRADEMARK OF E.I. DUPONT CORP.

DIMENSIONAL DRAWING
MODEL M15 METAL

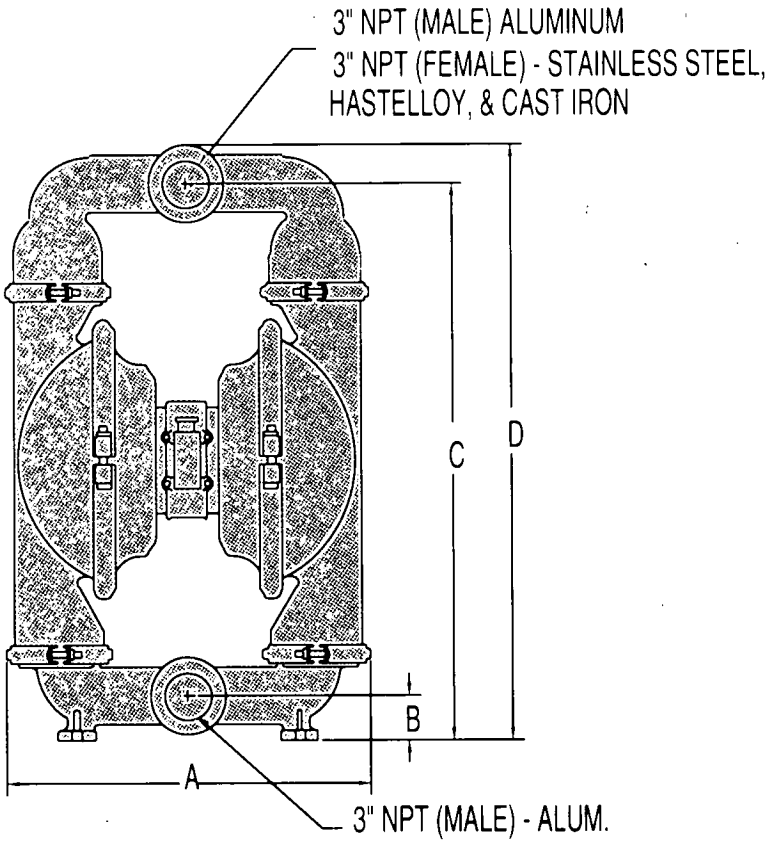

DIMENSIONS – M15 METAL		
ITEM	STANDARD (inch)	METRIC (mm)
A	19 29/32	505.2
B	2 13/32	61.1
C	29 31/32	760.6
D	32 3/8	821.7
E	17	431.5
F	2 23/32	69.0
G	3 15/16	100.0
H	12 5/16	312.5
J	16 3/4	425.5
K	14 3/16	360.4
L	12 1/16	306.2
M	10 5/32	257.8
N	11 3/32	281.8
P	5/8	15.9
R	2 3/4 (N/A)	69.8
S	2 19/32	65.8
T	12 1/32	305.4
U	4	101.6
V	12 1/32	305.4
W	18 3/4	475.9
X	Ø9/16	Ø14.3

BSP threads available.

Standard aluminum pumps are manufactured with mild steel nipples. Stainless steel nipples are available.

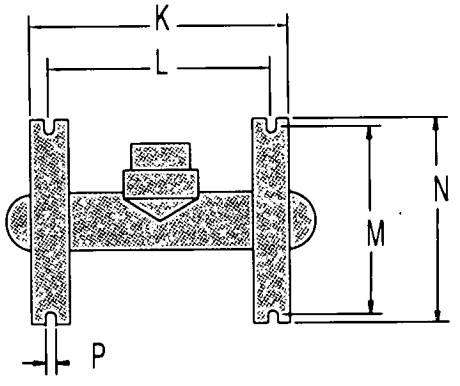

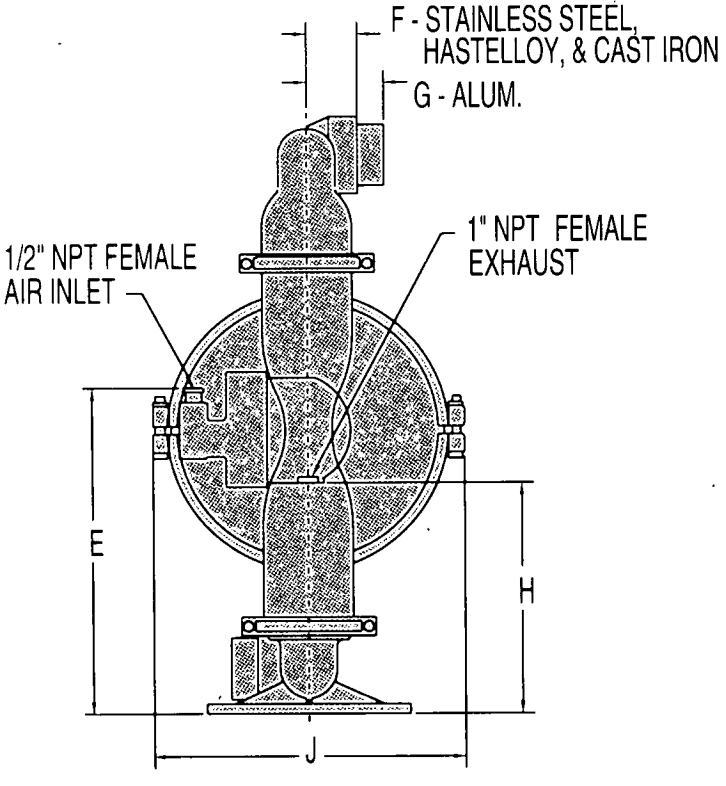

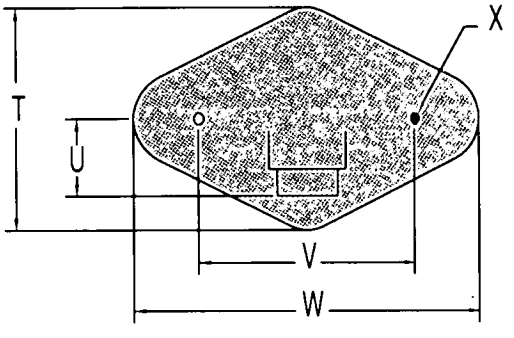

ALUMINUM BASE SCREEN MODEL

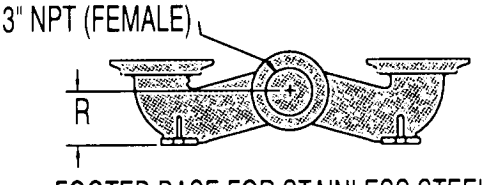

FOOTED BASE FOR STAINLESS STEEL & HASTELLOY MODELS

DIMENSIONAL DRAWING
MODEL M15 FOOD PROCESSING

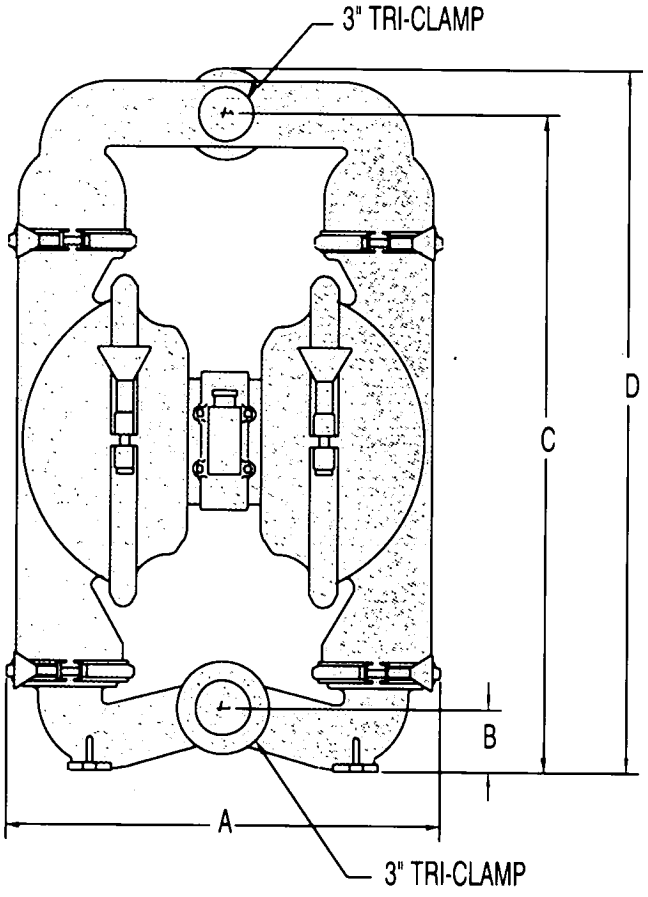

DIMENSIONS – M15 FOOD GRADE		
ITEM	STANDARD (inch)	METRIC (mm)
A	20 1/2	520.3
B	3	76.2
C	30 5/32	766.0
D	31 15/16	810.6
E	17 1/32	432.2
F	3 1/2	88.9
G	12 9/32	311.7
H	17	431.8
J	14	355.3
K	11 31/32	303.8
L	10	253.8
M	10 31/32	278.4
N	9/16	14.3

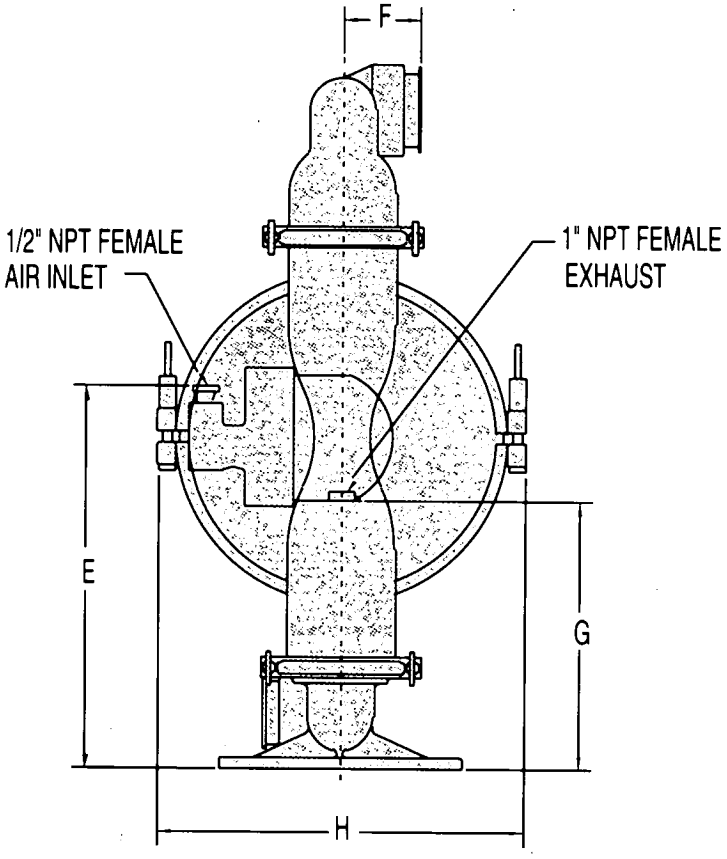

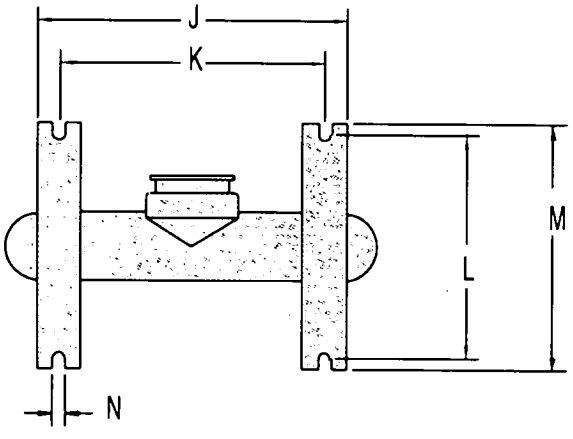

PUMP PERFORMANCE CURVES

MODEL M15 (Rubber/TPE-Fitted)

Weight.....Aluminum 110 lbs.
Cast Iron 181 lbs.
Stainless Steel 165 lbs.
Hastelloy 218 lbs.
Air Inlet.....½" Female NPT
Inlet.....3" Male NPT[1]
Outlet.....3" Male NPT[1]
Suction Lift.....**Rubber 17' Dry**
25' Wet
TPE 14' Dry
25' Wet
Displacement per Stroke.... 1.36 gal.[2]
Max. Size Solids.....⅜" Dia.

Example: To pump 90 gpm against a discharge head of 55 psig requires 70 psig and 87 scfm air consumption. (See dot on chart.)

[1]BSP threads available.
[2]Displacement per stroke was calculated at 70 psig air inlet against 30 psig discharge head pressure.

Caution: Do not exceed 125 psig air supply pressure.

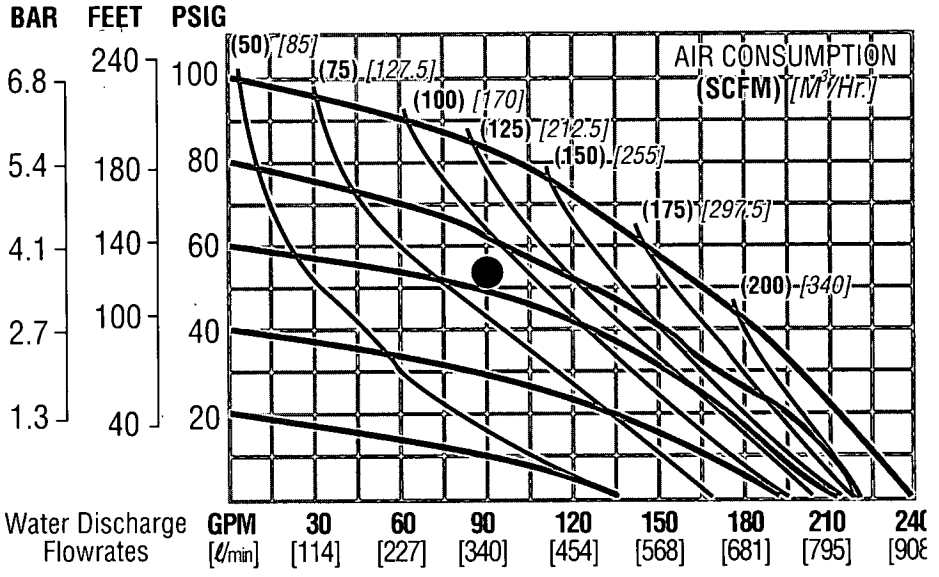

Volumes indicated on chart were determined by actually pumping water in calibrated tanks.

MODEL M15 (Teflon®-Fitted)

Weight.....Aluminum 110 lbs.
Cast Iron 181 lbs.
Stainless Steel 165 lbs.
Hastelloy 218 lbs.
Air Inlet.....½" Female NPT
Inlet.....3" Male NPT[1]
Outlet.....3" Male NPT[1]
Suction Lift.....14' Dry
25' Wet
Displacement per Stroke.... .926 gal.[2]
Max. Size Solids.....⅜" Dia.

Example: To pump 90 gpm against a discharge head of 55 psig requires 83 psig and 125 scfm air consumption. (See dot on chart.)

[1]BSP threads available.
[2]Displacement per stroke was calculated at 70 psig air inlet against 30 psig discharge head pressure.

Caution: Do not exceed 125 psig air supply pressure.

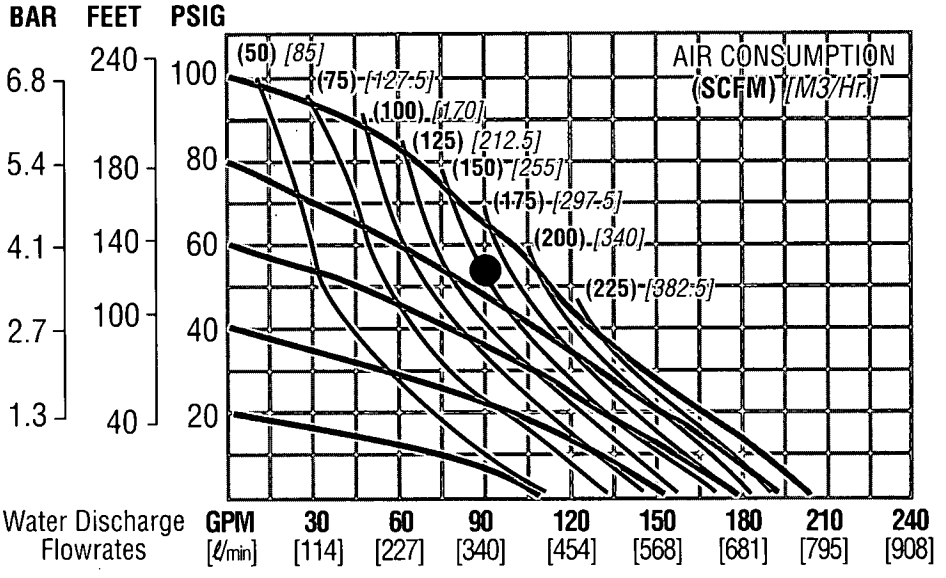

Volumes indicated on chart were determined by actually pumping water in calibrated tanks.

*BSP threads available.

SECTION I
INSTALLATION

The Model M15 has a 3" inlet and 3" outlet and is designed for flows to 230 gpm. The **M15 Metal** pump is manufactured with wetted parts of aluminum, cast iron, 316 Stainless Steel, or Hastelloy. The center block of the **M15 Metal** is constructed of glass-filled polypropylene. A variety of diaphragms, valve balls, and O-rings are available to satisfy temperature, chemical compatibility, abrasion and flex concerns.

The suction pipe size should be at least 3" diameter or larger if highly viscous material is being pumped. The suction hose must be non-collapsible, reinforced type as the M15 is capable of pulling a high vacuum. Discharge piping should be at least 3"; larger diameter can be used to reduce friction losses. It is critical that all fittings and connections are airtight or a reduction or loss of pump suction capability will result.

The M15 can be used in submersible applications only when both wetted and non-wetted portions are compatible with the material being pumped. If the pump is to be used in a submersible application, a hose should be attached to the pump's air exhaust and the exhaust air piped above the liquid level.

If the pump is to be used in a self-priming application, be sure that all connections are airtight and that the suction lift is within the pump's ability. Note: Materials of construction and elastomer material have an effect on suction lift parameters. Please consult Wilden distributor's for specifics.

Pumps in service with a positive suction head are most efficient when inlet pressure is limited to 7–10 psig. Premature diaphragm failure may occur if positive suction is 11 psig and higher.

THE MODEL M15 WILL PASS 3/8" SOLIDS. WHENEVER THE POSSIBILITY EXISTS THAT LARGER SOLID OBJECTS MAY BE SUCKED INTO THE PUMP, A STRAINER SHOULD BE USED ON THE SUCTION LINE.

CAUTION: DO NOT EXCEED 125 PSIG AIR SUPPLY PRESSURE.

BLOW OUT AIR LINE FOR 10 TO 20 SECONDS BEFORE ATTACHING TO PUMP TO MAKE SURE ALL PIPE LINE DEBRIS IS CLEAR.

SECTION II
SUGGESTED OPERATION AND MAINTENANCE INSTRUCTIONS

INSTALLATION: Months of careful planning, study, and selection efforts can result in unsatisfactory pump performance if installation details are left to chance.

Premature failure and long term dissatisfaction can be avoided if reasonable care is exercised throughout the installation process.

LOCATION: Noise, safety, and other logistical factors usually dictate that "utility" equipment be situated away from the production floor. Multiple installations with conflicting requirements can result in congestion of utility areas, leaving few choices for siting of additional pumps.

Within the framework of these and other existing conditions, every pump should be located in such a way that four key factors are balanced against each other to maximum advantage.

1. ACCESS: First of all, the location should be accessible. If it's easy to reach the pump, maintenance personnel will have an easier time carrying out routine inspections and adjustments. Should major repairs become necessary, ease of access can play a key role in speeding the repair process and reducing total downtime.

2. AIR SUPPLY: Every pump location should have an air line large enough to supply the volume of air necessary to achieve the desired pumping rate (see pump performance chart). Use air pressure up to a maximum of 125 psi depending upon pumping requirements.

For best results, the pumps should use an air filter, regulator, and lubricator system. The use of an air filter before the pump will insure that the majority of any pipeline contaminants will be eliminated. The use of a lubricant, suitable for the application, helps perform a number of functions. Lubricants reduce friction to minimize required shifting forces and reduce wear. Lubricants provide a protective coating against some forms of corrosion and contaminants. **Wilden suggests an oil with arctic characteristics (ISO 15-5Wt.) This oil is chemically compatible with the center block O-rings and has a low pour point to guard against problems associated with low temperatures.** The amount of lubrication required is directly related to the amount of oil introduced from the factory air system. We therefore suggest that the lowest setting on the lubricator be utilized and then increased as necessary.

Pump discharge rate can be controlled by limiting the volume and/or pressure of the air supply to the pump (preferred method). The use of a needle valve installed at the air inlet to the pump is suggested for this purpose. Pump discharge rate can also be controlled by throttling the pump discharge by installing a valve in the discharge line of the pump when the need to control the pump from a remote location exists. When the pump discharge pressure equals or exceeds the air supply pressure, the pump will stop; no bypass or pressure relief valve is needed, and pump damage will not occur. When operation is controlled by a solenoid valve in the air line, a three-way valve should be used. Pumping volume can be set by counting the number of strokes per minute.

A muffler installed on the pump's air exhaust will give quiet exhaust. Sound levels are reduced below OSHA specifications using a Wilden muffler.

3. ELEVATION: Selecting a site that is well within the pump's dynamic lift capability will assure that loss-of-prime troubles will be eliminated. In addition, pump efficiency can be adversely affected if proper attention is not given to elevation (see pump performance chart).

4. PIPING: Final determination of the pump site should not be made until the piping problems of each possible location have been evaluated. The impact of current and future installations should be considered ahead of time to make sure that inadvertent restrictions are not created for any remaining sites.

The best choice possible will be a site involving the shortest and the straightest hook-up of suction and discharge piping. Unnecessary elbows, bends, and fittings should be avoided. Pipe sizes should be selected so as to keep friction losses within practical limits. All piping should be supported independently of the pump. In addition, it should line up without placing stress on the pump fittings.

Expansion joints can be installed to aid in absorbing the forces created by the natural reciprocating action of the pump. If the pump is to be bolted down to a solid foundation, a mounting pad placed between the pump and foundation will assist in minimizing pump vibration. Flexible connections between the pump and rigid piping will also assist in minimizing pump vibration. If quick-closing valves are installed at any point in the discharge system, or if pulsation within a system becomes a problem, a surge suppressor should be installed to protect the pump, piping and gauges from surges and water hammer.

When pumps are installed in applications involving flooded suction or suction head pressures, a gate valve should be installed in the suction line to permit closing of the line for pump service.

INSPECTIONS: Periodic inspections have been found to offer the best means for preventing unscheduled pump downtime.

Individuals responsible for checking and maintaining lubrication levels in the pumps should also check for any abnormal noise or leakage. Personnel familiar with the pumps' construction and service should be informed of any abnormalities that are detected.

RECORDS: When service is required, a record should be made of all necessary repairs and replacements. Over a period of time, such records can become a valuable tool for predicting and preventing future maintenance problems and unscheduled downtime. In addition, accurate records make it possible to identify pumps that are poorly suited to their applications.

SECTION III
TROUBLESHOOTING

Pump will not run or runs slowly.

1. Check air inlet screen and air filter for debris.
2. Check for sticking air valve, flush air valve in solvent.
3. Check for worn out air valve. If piston face in air valve is shiny instead of dull, air valve is probably worn beyond working tolerances and must be replaced.
4. Check center block O-rings. If worn excessively, they will not seal and air will simply flow through pump and out air exhaust. Use only Wilden O-rings as they are of special construction.
5. Check for rotating piston in air valve.
6. Check type of lubricant being used. A higher viscosity oil than suggested may cause the piston to stick or run erratically. Wilden suggests the use of a hydraulic oil with arctic characteristics (ISO 15-5 wt.).

Pump runs but little or no product flows.

1. Check for pump cavitation; slow pump speed down to match thickness of material being pumped.
2. Check for sticking ball checks. If material being pumped is not compatible with pump elastomers, swelling may occur. Replace ball checks and seal with proper elastomers.
3. Check to make sure all suction connections are air tight, especially clamp bands around intake balls.

Pump air valves freezes.

Check for excessive moisture in compressed air. Either install dryer or hot air generator for compressed air.

Air bubbles in pump discharge.

1. Check for ruptured diaphragm.
2. Check tightness of clamp bands, especially at intake manifold.

Product comes out air exhaust.

1. Check for diaphragm rupture.
2. Check tightness of piston plates to shaft.

TORQUE SPECIFICATIONS FOR MODEL M15		
Item #	**Description of Part**	**Maximum Torque**
1	Air Valve — Lubed	80 in.-lbs. [9.0 m-N]
2	Outer Piston	78 ft.-lbs. [105.8 m-N]
3	Small Clamp Band — Rubber	50 in.-lbs. [5.6 m-N]
4	Small Clamp Band — Teflon	137 in.-lbs. [15.5 m-N]
5	Large Clamp Band — All	45 ft.-lbs. [61.0 m-N]
6	Air Chambers and Center Block Assembly	23 ft.-lbs. [31.2 m-N]
7	2C-Ring and Outer Piston Assembly	18 ft.-lbs. [24.4 m-N]
8	Screen and Inlet Cover	80 in.-lbs. [9.0 m-N]

SECTION IV

DISASSEMBLY/REASSEMBLY INSTRUCTIONS

CAUTION: Before any maintenance or repair is attempted, the compressed air line to the pump should be disconnected and all air pressure allowed to bleed from pump. Disconnect all intake, discharge and air lines. Drain the pump by turning it upside down and allowing any fluid to flow into a suitable container.

The M15 has a 3" inlet and 3" outlet and is designed for flows up to 240 gpm. Its air distribution system is based upon design simplicity and proven efficiency. The model M15 is available in aluminum, cast iron, 316 Stainless Steel, or Hastelloy "C" wetted parts. It is available with optional screened base for submersible applications (aluminum only).

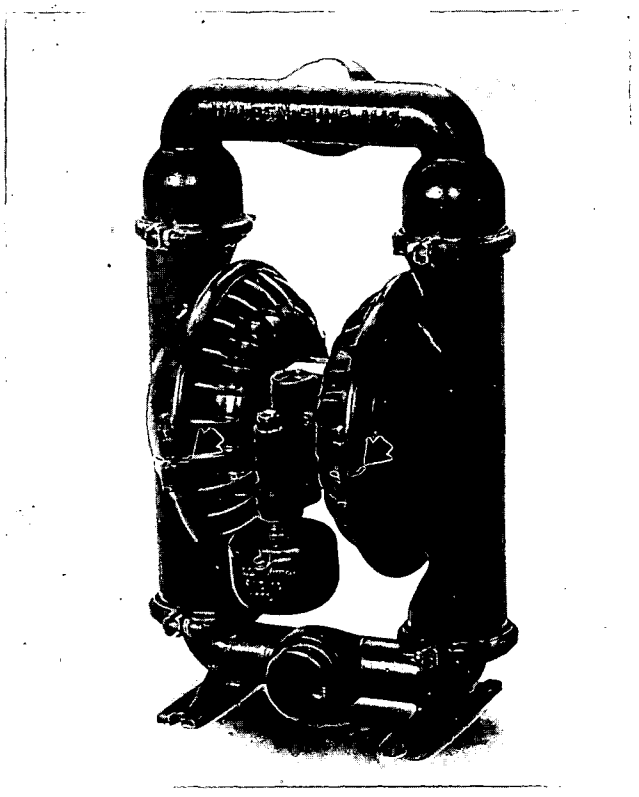

NOTE: Before starting disassembly, mark a line from each liquid chamber to its corresponding air chamber. This line will assist in proper alignment during reassembly.

NOTE: Model used for these instructions incorporates rubber diaphragms, balls, and seats. Models with Teflon® diaphragms, balls and metallic seats are the same except where noted.

Start by removing the two clamp bands that fasten the discharge manifold to the main body of the pump. *(Figures 1A and 1B)* The discharge valve balls and seats are now available for inspection.

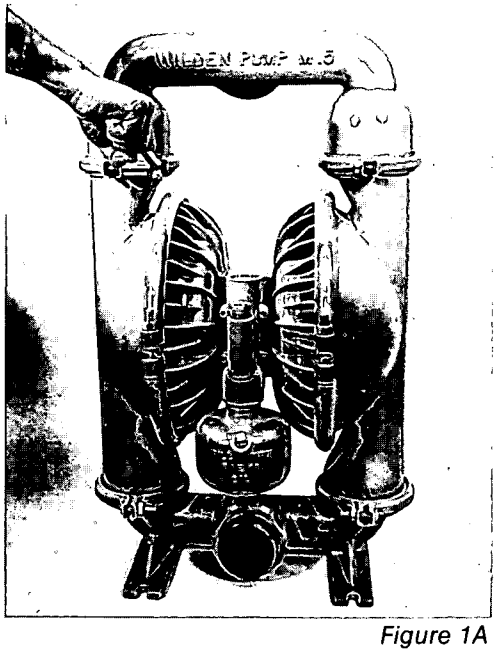

Figure 1A

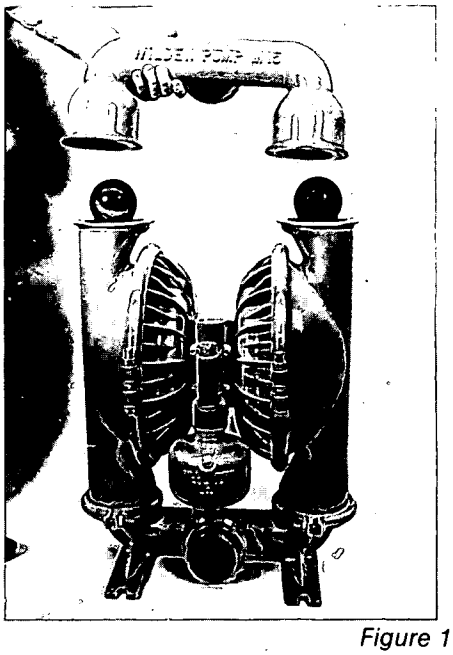

Figure 1B

STEP 2

Remove the two clamp bands that hold the inlet manifold to the main body of the pump. Lift the main body of the pump from the inlet manifold and set it to one side. The inlet ball valves and seats are now available for examination. (See *Figure 2A)* Next, remove large clamp band which attaches water chamber to the center section of the pump. (See *Figure 2B)*

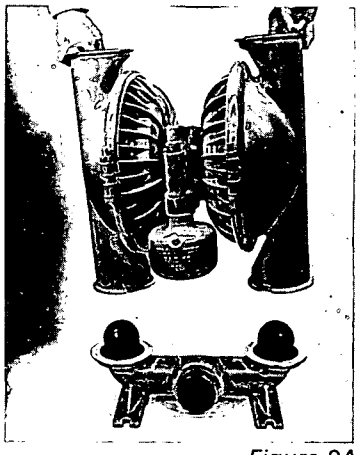

Figure 2A

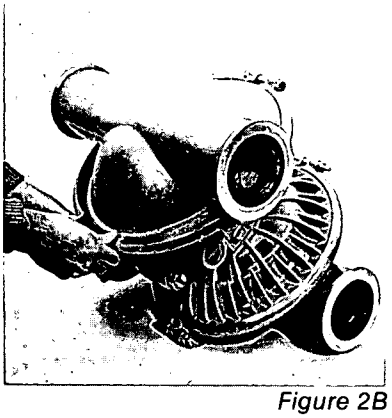

Figure 2B

Remove only one liquid chamber from the center section. This will expose the diaphragm and its piston plate. (See *Figure 2C)* The diaphragm and the piston plate can be removed by unscrewing them from the connecting air shaft with an adjustable wrench. The opposite diaphragm will be held tight by the opposite liquid chamber. (See *Figure 2D)*

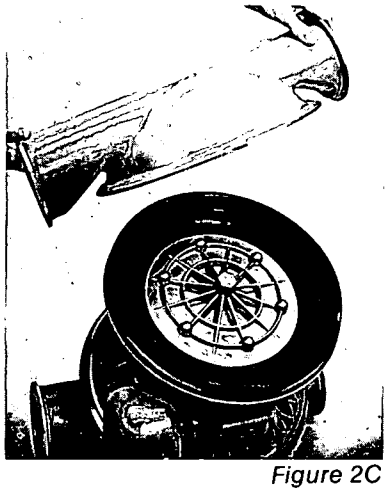

Figure 2C

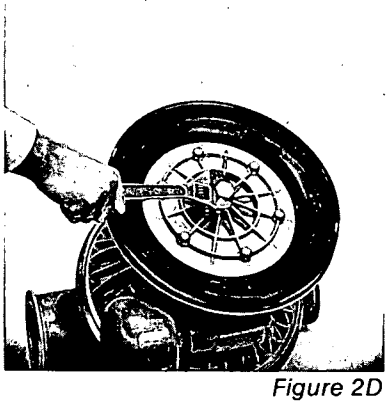

Figure 2D

Now remove the opposite liquid chamber. The second diaphragm is now available for inspection and cleaning. (See *Figure 2E)* A vise with wood blocks is suggested as a method of securing the shaft while removing the second diaphragm. **It is important not to score or mark the chrome-plated shaft.**

Figure 2E

Upon removing the outer piston from the shaft, the inner piston and the shaft are now exposed and available for inspection.

ASSEMBLY:

STEP 1 *(RUBBER DIAPHRAGMS)* *Exploded View Figure 3A*

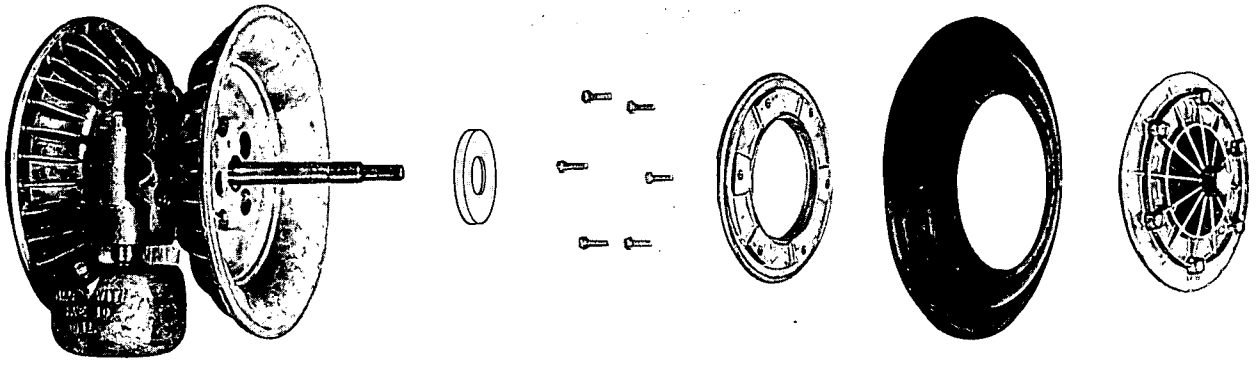

Inner piston ring maximum torque rating: refer to page 6, Item #7.

(TEFLON® DIAPHRAGMS) *Exploded View Figure 3B*

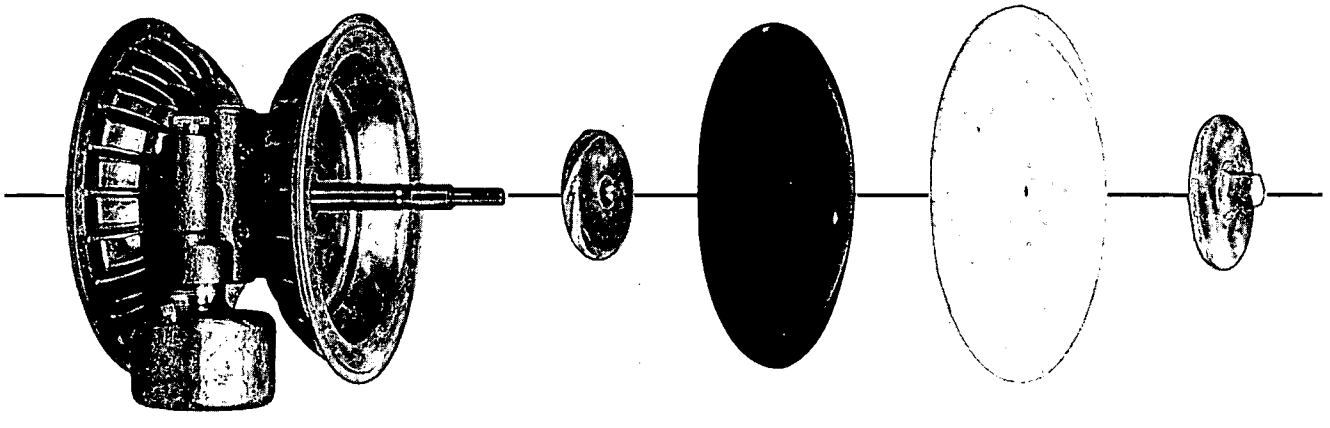

Expanded Teflon® gasket material is installed during factory assembly of all plastic Wilden pumps fitted with Teflon® diaphragms to assure seal integrity with minimum flange pressures. Because this material is highly compressable and not reusable, these gaskets must be replaced whenever a plastic Teflon® diaphragm fitted pump is disassembled.

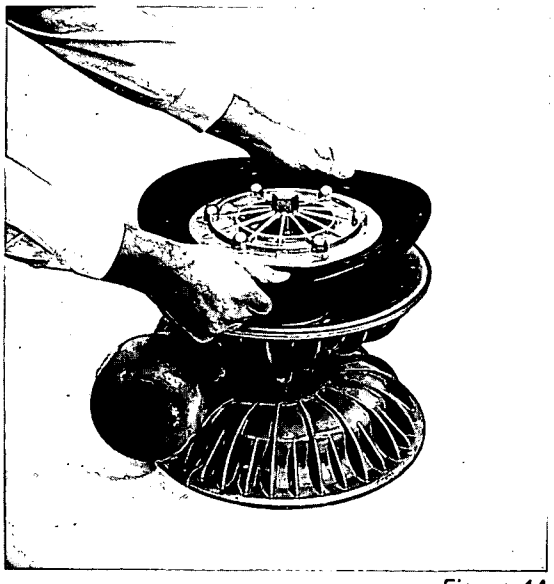

Figure 4A

Figure 4B

STEP 2

Before assembly, remove O-rings from center block bushing and flush center block, removing grit and contaminants. Install new O-rings in center block. (See page 13.) To install shaft, push shaft firmly through the bushing in the center block. Be sure to lubricate bushing with 5 weight arctic oil (ISO grade 15) so that shaft may pass by the O-rings. (See *Figure 4A.)* Next, pull diaphragm down so that it fits into the lip of the air chamber. Then, turn center section over and push diaphragm from full stroke position to exhaust position, thus exposing shaft so that other diaphragm can be positioned. *(Figure 4B.)* Next, place inner piston and opposite diaphragm in position for assembly. *(Figure 4C.)* Once diaphragms are installed, it is important to tighten outer piston simultaneously (turning in opposite direction) to ensure a tight, secure fit. *(Figure 4D.)* Tighten outer piston per the torque specifications* (Item #2).

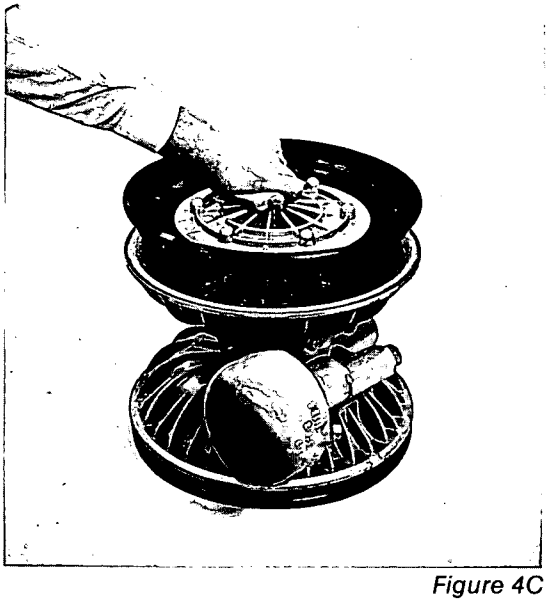

Figure 4C

*Refer to page 6 for torque specifications.

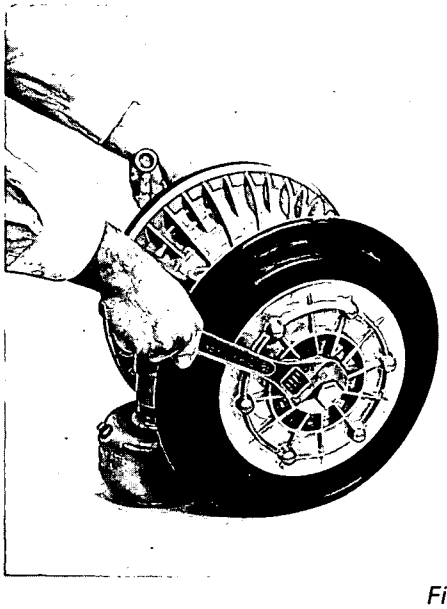

Figure 4D

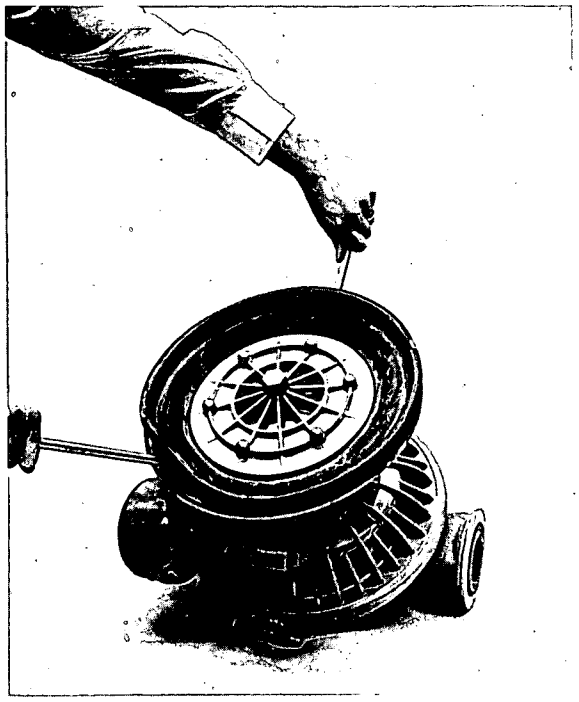

Figure 4E

Figure 4F

Now install water chamber with large clamp band on one side. Center section should then be turned over so that diaphragm can be pushed up with pry bars to full stroke position so that opposite water chamber can be installed. *(Figure 4E* and *Figure 4F)* **CAUTION:** Both the top and bottom flange surfaces of the water chambers must be aligned so that they are level and in the same planes to prevent leakage. Tighten large clamp band per the torque specifications* (Item #5).

*Refer to page 6 for torque specifications.

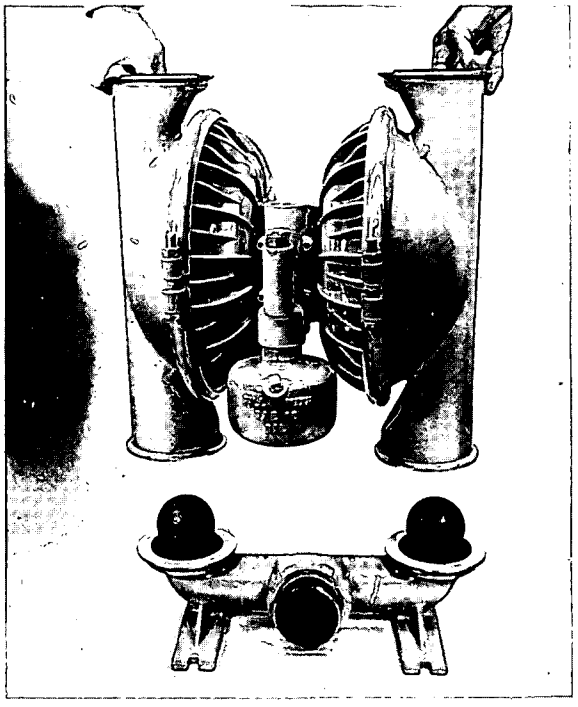

Figure 4G

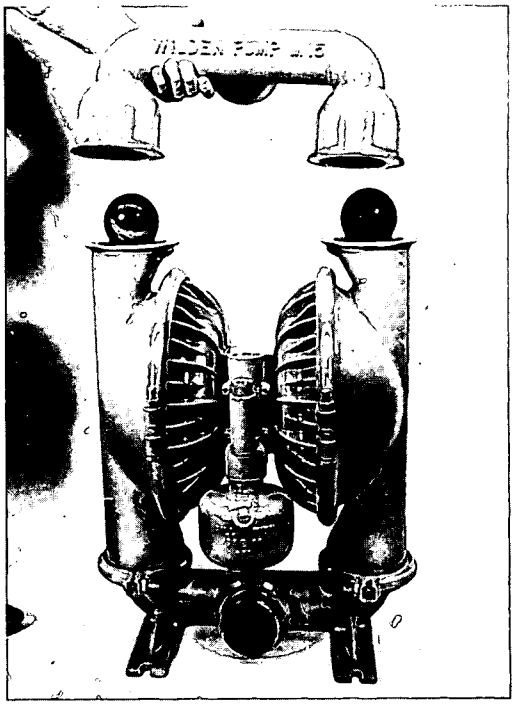

Figure 4H

Install the valve seats in the water chambers and inlet manifold with the molded seat O-ring down inside the seat recess. Next, securely tighten small clamp bands around inlet manifold and water chambers. *(Figure 4G)* Finally, place discharge manifold over assembled center section *(Figure 4H)* and secure clamp bands per the torque specifications* (Item #3 or #4).

SECTION V
AIR VALVE/CENTER BLOCK DISASSEMBLY/REASSEMBLY

The air valve assembly consists of both the air valve body and piston and the center block. The unique design of the air valve relies only on differential pressure to effect the diaphragm shift. It is reliable and simple to maintain. The bushing in the center block, along with the diaphragm shaft, provides the "trigger" to tell the air valve to shift. The following procedure will ensure that the air valve on your Wilden pump will provide long trouble-free service.

AIR VALVE BODY AND PISTON ASSEMBLY AND DISASSEMBLY:

The air valve body and piston can be disconnected from the pump by removing the four socket-head cap screws which attach it to the center block. The piston should move freely and the ports in the piston should line up with the ports on the face of the air valve body (see *Figure D)*. The piston should also appear to be a dull dark gray in color. If the piston appears to be a shiny sluminum color, the air valve is probably worn beyond working tolerances and should be replaced.

NOTE: Lubricate air valve with a 5 weight arctic oil (ISO grade 15).

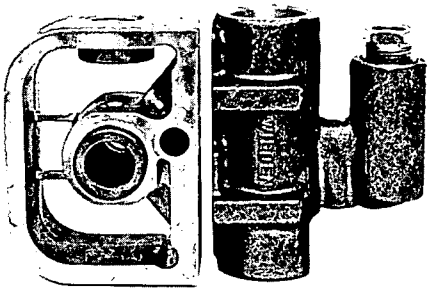

CENTER SECTION ASSEMBLY

Figure A

If the piston does not move freely in the air valve, the entire air valve should be immersed in a cleaning solution (**NOTE:** Do not force the piston by inserting a metal object.) This soaking should remove any accumulation of sludge and grit which is preventing the air valve piston from moving freely. Also, remove and clean the air valve screen (P/N 20E). If the air valve piston does not move freely after the above cleaning, the air valve should be dissassembled as follows: remove the snap ring from the top end of the air valve cylinder and apply an air jet to the 3/16-inch hole on the opposite end of the air valve face (see *Figure C)*. **CAUTION:** The air valve end cap may come out with considerable force. Inspect the piston and cylinder bore for nicks and scoring.

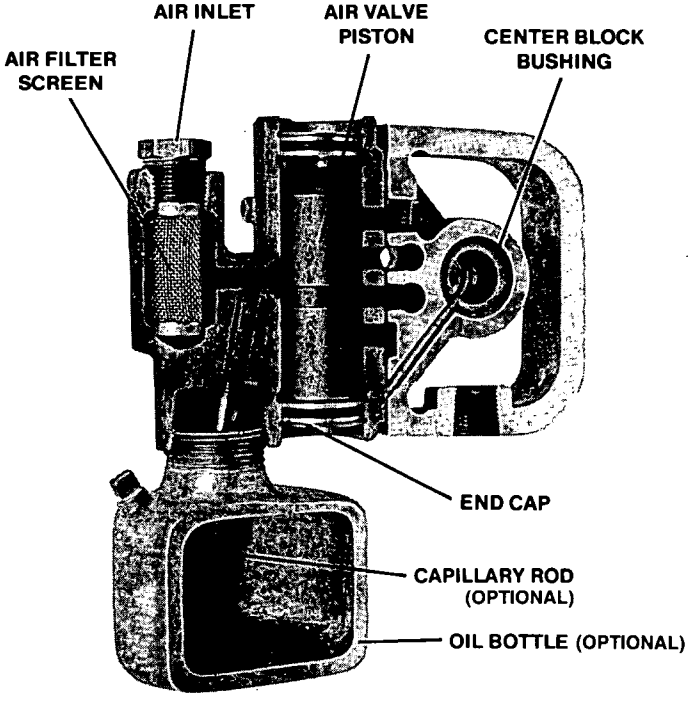

Figure B

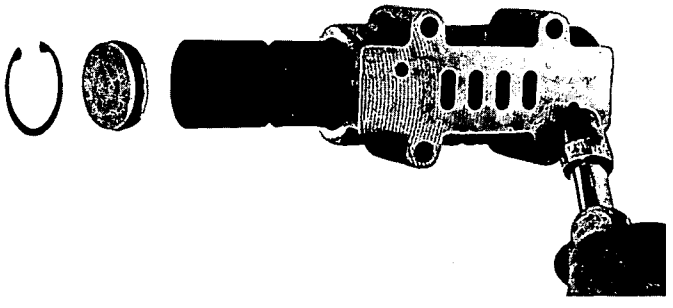

Figure C

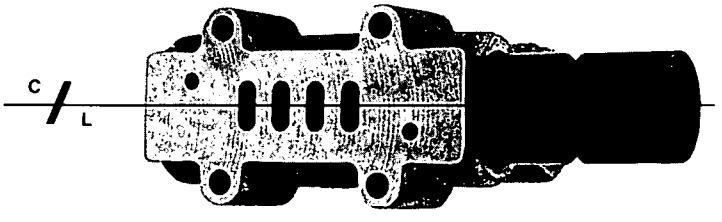

Figure D

Small nicks can usually be dressed out and the piston returned to service. Inspect the cylinder end caps. Make sure that the guide pin is straight and smooth or the piston will not move freely in the cylinder. New O-rings should be installed on the end caps, assuring that proper alignment of the piston and cylinder ports is maintained. (See *Figure D.)* Reinstall air valve to center block of pump and tighten per the torque specifications* (Item #1).

O-RING REPLACEMENT:

When the O-rings become worn or flat, they will no longer seal and must be replaced. This is most easily accomplished by using a tool called an O-ring pick, available through most industrial supply companies.

CENTER BLOCK ASSEMBLY (P/N P1H):

The pump's center block consists of an injection-molded polypropylene housing with a cast-in bronze bushing. The bushing has eleven grooves cut on the inside diameter. There are seven O-rings that fit in these grooves (see *Figure E).* Since these O-rings form a part of the shifting function of the pump, it is necessary that they be located in the proper grooves. When bushing wear becomes excessive, a new center block must be used. Attach air chambers to center block and tighten per the torque specifications* (Item #6).

NOTE: When attaching air valve to center block, align bleed-off ports in center block to air valve gasket.

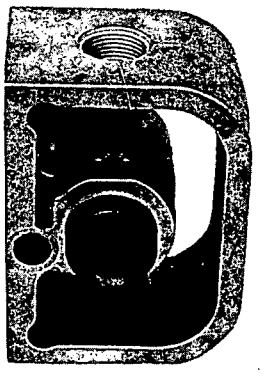

Figure F (Side View)

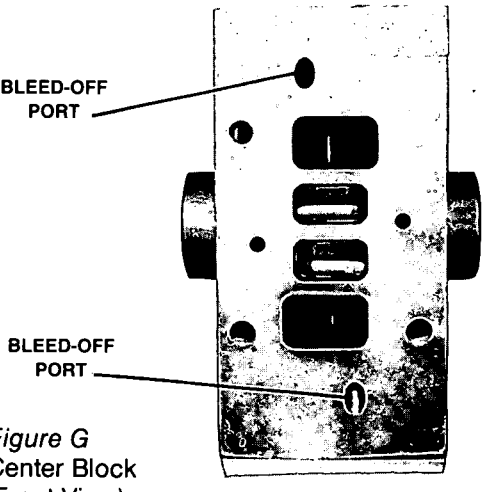

Figure G
Center Block
(Front View)

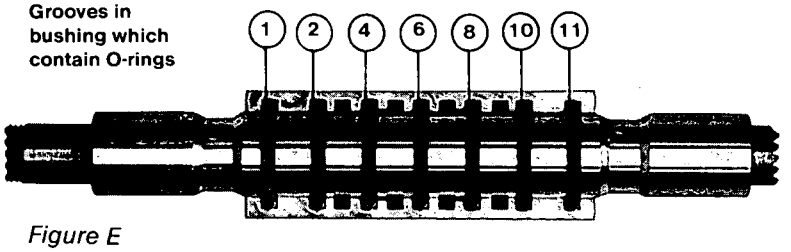

Figure E

*Refer to page 6 for torque specifications.

WILDEN MODEL M15 w/RUBBER ELASTOMERS

Item	Description	Qty.	M15 /OO P/N	M15 /FO P/N	M15 /BO P/N	M15 /BF P/N	M15 /OA P/N	M15 /OB P/N	M15 /OF P/N	M15 /FB P/N	M15 /HO P/N	M15 /HJ P/N	M15 /HS P/N
1	Air Valve Assembly[1]	1	1A	1A	1A	1A	1A	1A	1A	1A	1A	SG1A	1A
2	Air Valve Screen	1	20E	20E	20E	20E	20E	20E	20E	20E	20E	20E	20E
3	Air Valve End Cap with Guide (top)	1	15-2340-23	15-2340-23	15-2340-23	15-2340-23	15-2340-23	15-2340-23	15-2340-23	15-2340-23	15-2340-23	15-2340-23	15-2340-23
4	Air Valve End Cap without Guide (bottom)	1	15-2350-23	15-2350-23	15-2350-23	15-2350-23	15-2350-23	15-2350-23	15-2350-23	15-2350-23	15-2350-23	15-2350-23	15-2350-23
5	Air Valve Snap Ring	2	S1T	S1T	S1T	S1T	S1T	S1T	S1T	S1T	S1T	S1T	S1T
6	Air Valve Bushing	1	30AP	30AP	30AP	30AP	30AP	30AP	30AP	30AP	30AP	S20AP	S20AP
7	Air Valve Cap O-Ring	2	1U	1U	1U	1U	1U	1U	1U	1U	1U	1U	1U
8	Oil Bottle (Optional)	1	1D	1D	1D	1D	1D	1D	1D	1D	1D	SG1D	1D
9	Plug (Optional)	1	1DP	1DP	11DP	11DP	1DP	11DP	1DP	11DP	11DP	S1DP	11DP
10	Capillary Rod (Optional)	1	1C	1C	1C	1C	1C	1C	1C	1C	1C	1C	1C
11	Air Valve Gasket — Buna N	1	15-2600-52	15-2600-52	15-2600-52	15-2600-52	15-2600-52	15-2600-52	15-2600-52	15-2600-52	15-2600-52	15-2600-52	15-2600-52
12	Air Valve Screw	4	20AS	20AS	30AS	30AS	20AS	30AS	20AS	30AS	30AS	30AS	30AS
13	Center Block	1	P1H	P1H	P1H	P1H	1H	1H	1H	1H	P1H	SG1H	S1H
14	Center Block O-Ring	7	1JH	1JH	1JH	1JH	1JH	1JH	1JH	1JH	1JH	1JH	1JH
15	Check Body	1	1K1	N/R	1K1	N/R	1K1	1K1	N/R	N/R	N/R	N/R	N/R
16	Nipple	1	1F	N/R	1FS	N/R	1F	1FS	N/R	N/R	N/R	N/R	N/R
17	Check Ball	1	1M	N/R	1M	N/R	1M	1M	N/R	N/R	N/R	N/R	N/R
18	Block Gasket — Buna N	2	15-3520-52	15-3520-52	15-3520-52	15-3520-52	15-3520-52	15-3520-52	15-3520-52	15-3520-52	15-3520-52	15-3520-52	15-3520-52
19	Shaft	1	2A	2A	2A	2A	2A	2A	2A	2A	2A	2A	2A
20	Piston, Outer	2	B2B	B2B	B2B	B2B	B2B	B2B	B2B	B2B	H2B	H2B	H2B
21	Piston, Inner	2	2C	2C	2C	2C	2C	2C	2C	2C	2C	2C	S2C
22	Washer, Inner Piston Back-up	2	2EE	2EE	2EE	2EE	2EE	2EE	2EE	2EE	2EE	2EE	2EE
23	Piston Assembly — Bolt & Washer	12	2G/68B	2G/68B	2G/68B	2G/68B	2G/68B	2G/68B	2G/68B	2G/68B	2G/68B	2G/68B	2G/68B
24	Air Chamber, Counter Sunk	2	3B	3B	3B	3B	3B	3B	3B	3B	3B	SG3B	S3B
25	Air Chamber Screw	4	3C	3C	3C	3C	3C	3C	3C	3C	3C	S3C	S3C
26	Air Chamber Cone Nut	4	22D	22D	22D	22D	22D	22D	22D	22D	22D	S22D	S22D
27	Water Chamber	2	50	50	50	50	50	50	50	50	H50	H50	H50
28	Discharge Manifold	1	51	51	B51	B51	51	B51	51	B51	H51	H51	H51
29	Inlet Housing — Screened	1	52	N/R	B52	N/R	52	B52	N/R	N/R	N/R	N/R	N/R
30	Inlet Housing for Footed Base	1	N/R	52F	N/R	B52F	N/R	N/R	52F	B52F	H52	H52	H52
31	Screen (for P/N 52 & B52)	1	53	N/R	53	N/R	53	53	N/R	N/R	N/R	N/R	N/R
32	Suction Hook-up Cover	1	57	N/R	57	N/R	57	57	N/R	N/R	N/R	N/R	N/R
33	Hex Head Machine Screw	3	38A	N/R	38AS	N/R	38A	38AS	N/R	N/R	N/R	N/R	N/R
34	Diaphragm	2	*	*	*	*	*	*	*	*	*	*	*
35	Valve Ball	4	*	*	*	*	*	*	*	*	*	*	*
36	Valve Seat	4	*	*	*	*	*	*	*	*	*	*	*
37	Large Clamp Band	2	11	11	S11	S11	11	S11	11	S11	S11	S11	S11
38	Large Carriage Bolt	4	11C	11C	S11C	S11C	11C	S11C	11C	S11C	S11C	S11C	S11C
39	Large Hex Nut	4	11D	11D	S11D	S11D	11D	S11D	11D	S11D	S11D	S11D	S11D
40	Small Clamp Band	4	54	54	S54	S54	54	S54	54	S54	S54	S54	S54
41	Small Carriage Bolt	8	54B	54B	S54B	S54B	54B	S54B	54B	S54B	S54B	S54B	S54B
42	Small Hex Nut	8	30D	30D	S30D	S30D	30D	S30D	30D	S30D	S30D	S30D	S30D
43	Muffler (Optional; not shown)	1	70B	70B	70B	70B	70B	70B	70B	70B	70B	70B	70B

Item	Description	Qty.	M15 /HW P/N	M15 /SO P/N	M15 /SJ P/N	M15 /SS P/N	M15 /SW P/N	M15 /SX P/N	M15 /WO P/N	M15 /WS P/N	M15 /WW P/N	M15 /SGR P/N
1	Air Valve Assembly[1]	1	1A	1A	SG1A	1A	1A	S1A	1A	1A	1A	SG1A
2	Air Valve Screen	1	20E	20E	20E	20E	20E	20E	20E	20E	20E	20E
3	Air Valve End Cap with Guide (top)	1	15-2340-23	15-2340-23	15-2340-23	15-2340-23	15-2340-23	15-2340-23	15-2340-23	15-2340-23	15-2340-23	15-2340-23
4	Air Valve End Cap without Guide (bottom)	1	15-2350-23	15-2350-23	15-2350-23	15-2350-23	15-2350-23	15-2350-23	15-2350-23	15-2350-23	15-2350-23	15-2350-23
5	Air Valve Snap Ring	2	S1T	S1T	S1T	S1T	S1T	S1T	S1T	S1T	S1T	S1T
6	Air Valve Bushing	1	30AP	30AP	S20AP	30AP	30AP	S20AP	30AP	30AP	30AP	S20AP
7	Air Valve Cap O-Ring	2	1U	1U	1U	1U	1U	1U	1U	1U	1U	1U
8	Oil Bottle (Optional)	1	1D	1D	1D	1D	1D	1D	1D	1D	1D	1D
9	Plug (Optional)	1	11D	11D	11D	11D	11D	11DP	11D	11D	11D	11D
10	Capillary Rod (Optional)	1	1C	1C	1C	1C	1C	1C	1C	1C	1C	1C
11	Air Valve Gasket — Buna N	1	15-2600-52	15-2600-52	15-2600-52	15-2600-52	15-2600-52	15-2600-52	15-2600-52	15-2600-52	15-2600-52	15-2600-52
12	Air Valve Screw	4	30AS	30AS	30AS	30AS	30AS	30AS	30AS	30AS	30AS	30AS
13	Center Block	1	P1H	P1H	SG1H	S1H	P1H	S1H	P1H	P1H	P1H	S1H
14	Center Block O-Ring	7	1JH	1JH	1JH	1JH	1JH	1JH	1JH	1JH	1JH	1JH
15	Check Body	1	N/R	N/R	N/R	N/R	N/R	N/R	N/R	N/R	N/R	N/R
16	Nipple	1	N/R	N/R	N/R	N/R	N/R	N/R	N/R	N/R	N/R	N/R
17	Check Ball	1	N/R	N/R	N/R	N/R	N/R	N/R	N/R	N/R	N/R	N/R
18	Block Gasket — Buna N	2	15-3520-52	15-3520-52	15-3520-52	15-3520-52	15-3520-52	15-3520-52	15-3520-52	15-3520-52	15-3520-52	15-3520-52
19	Shaft	1	2A	2A	2A	2A	2A	2A	2A	2A	2A	2A
20	Piston, Outer	2	H2B	S2B	S2B	S2B	S2B	S2B	W2B	W2B	W2B	S2B
21	Piston, Inner	2	2C	2C	2C	2C	2C	2C	2C	2C	2C	2C
22	Washer, Inner Piston Back-up	2	2EE	2EE	2EE	2EE	2EE	2EE	2EE	2EE	2EE	2E
23	Piston Assembly — Bolt & Washer	12	2G/68B	2G/68B	2G/68B	2G/68B	2G/68B	2G/68B	2G/68B	2G/68B	2G/68B	2G/68B
24	Air Chamber, Counter Sunk	2	W3B	3B	SG3B	S3B	W3B	S3B	3B	3B	W3B	S3B
25	Air Chamber Screw	4	3C	3C	S3C	S3C	3C	S3C	3C	3C	3C	S3C
26	Air Chamber Cone Nut	4	22D	22D	S22D	S22D	22D	22D	22D	22D	22D	S22D
27	Water Chamber	2	H50	S50	S50	S50	S50	S50	W50	W50	W50	S50
28	Discharge Manifold	1	H51	S51	S51	S51	S51	W51	W51	W51	W51	SG51
29	Inlet Housing — Screened	1	N/R	N/R	N/R	N/R	N/R	N/R	N/R	N/R	N/R	N/R
30	Inlet Housing for Footed Base	1	H52	S52	S52	S52	S52	S52	W52	W52	W52	SG52
31	Screen (for P/N 52 & B52)	1	N/R	N/R	N/R	N/R	N/R	N/R	N/R	N/R	N/R	N/R
32	Suction Hook-up Cover	1	N/R	N/R	N/R	N/R	N/R	N/R	N/R	N/R	N/R	N/R
33	Hex Head Machine Screw	3	N/R	N/R	N/R	N/R	N/R	N/R	N/R	N/R	N/R	N/R
34	Diaphragm	2	*	*	*	*	*	*	*	*	*	FG5
35	Valve Ball	4	*	*	*	*	*	*	*	*	*	FG55
36	Valve Seat	4	*	*	*	*	*	*	*	*	*	FB56
37	Large Clamp Band	2	S11	S11	S11	S11	S11	S11	11	S11	S11	SG11
38	Large Carriage Bolt	4	S11C	S11C	S11C	S11C	S11C	S11C	11C	S11C	S11C	S11C
39	Large Hex Nut	4	S11D	S11D	S11D	S11D	S11D	S11D	11D	S11D	S11D	N/A
40	Small Clamp Band	4	S54	S54	S54	S54	S54	S54	54	S54	S54	SG54
41	Small Carriage Bolt	8	S54B	S54B	S54B	S54B	S54B	S54B	54B	S54B	S54B	S54B
42	Small Hex Nut	8	S30D	S30D	S30D	S30D	S30D	S30D	30D	S30D	S30D	N/A
43	Muffler (Optional; not shown)	1	70B	70B	70B	70B	70B	70B	70B	70B	70B	70B

[1]Air Valve Assembly includes parts thru 1U.
[2]Optional elastomers available. See page 16.
[3]SGR pump large clamp band comes with SP11WN wing nut and SP11C washer.
[4]SGR pump small clamp band comes with SP30WN wing nut and SP30C washer.

***Refer to page 16 for elastomer options.**

M15

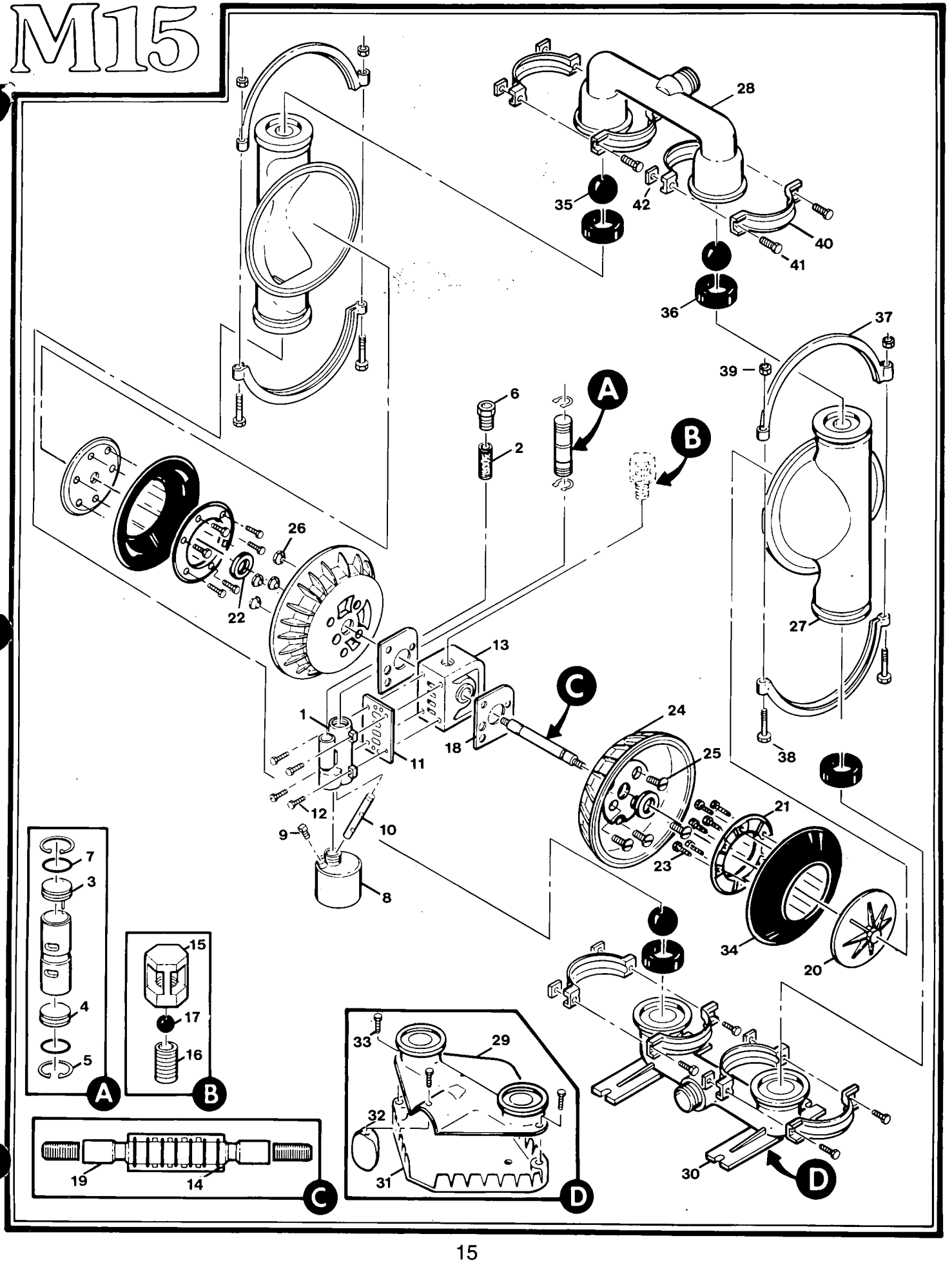
28
35
42
40
41
36
37
39
6
2
A
B
26
22
27
13
C
1
24
18
11
25
38
12
21
9
10
23
7
3
8
34
20
15
4
17
16
5
33
29
32
31
30
19
14
D

WILDEN MODEL M15 w/TEFLON® ELASTOMERS

Item	Description	Qty.	M15 /TO P/N	M15 /OT P/N	M15 /BT P/N	M15 /TB P/N	M15 /HT P/N	M15 /HV P/N	M15 /HY P/N	M15 /ST P/N	M15 /SV P/N	M15 /SY P/N	M15 /SZ P/N	M15 /WT P/N	M15 /WY P/N	M15 /SNR P/N
1	Air Valve Assembly[1]	1	1A	1A	1A	1A	1A	1A	1A	1A	1A	1A	S1A	1A	1A	SG1A
2	Air Valve Screen	1	20E	20E	20E	20E	20E	20E	20E	20E	20E	20E	20E	20E	20E	20E
3	Air Valve End Cap w/Guide (top)	1	15-2340-23	15-2340-23	15-2340-23	15-2340-23	15-2340-23	15-2340-23	15-2340-23	15-2340-23	15-2340-23	15-2340-23	S1RA	15-2340-23	15-2340-23	15-2340-23
4	Air Valve End Cap without Guide (bottom)	1	15-2350-23	15-2350-23	15-2350-23	15-2350-23	15-2350-23	15-2350-23	15-2350-23	15-2350-23	15-2350-23	15-2350-23	S1S	15-2350-23	15-2350-23	15-2350-23
5	Air Valve Snap Ring	2	S1T	S1T	S1T	S1T	S1T	S1T	S1T	S1T	S1T	S1T	S1T	S1T	S1T	S1T
6	Air Valve Bushing	1	30AP	30AP	30AP	30AP	30AP	S20AP	30AP	30AP	30AP	30AP	S20AP	30AP	30AP	S20AP
7	Air Valve Cap O-Ring	2	1U	1U	1U	1U	1U	1U	1U	1U	1U	1U	1U	1U	1U	1U
8	Oil Bottle (Optional)	1	1D	1D	1D	1D	1D	1D	1D	1D	1D	1D	1D	1D	1D	1D
9	Plug (Optional)	1	11D	11D	11D	11D	11D	11D	11D	11D	11D	11D	11D	11D	11D	11D
10	Capillary Rod (Optional)	1	1C	1C	1C	1C	1C	1C	1C	1C	1C	1C	1C	1C	1C	1C
11	Air Valve Gasket — Buna N	1	15-2600-52	15-2600-52	15-2600-52	15-2600-52	15-2600-52	15-2600-52	15-2600-52	15-2600-52	15-2600-52	15-2600-52	15-2600-52	15-2600-52	15-2600-52	15-2600-52
12	Air Valve Screw	4	30AS	30AS	30AS	30AS	30AS	30AS	30AS	30AS	30AS	30AS	30AS	30AS	30AS	30AS
13	Center Block	1	P1H	1H	P1H	1H	P1H	S1H	P1H	P1H	S1H	P1H	S1H	P1H	P1H	S1H
14	Center Block O-Ring	7	1JH	1JH	1JH	1JH	1JH	1JH	1JH	1JH	1JH	1JH	1JH	1JH	1JH	1JH
15	Block Gasket — Buna N	2	15-3520-52	15-3520-52	15-3520-52	15-3520-52	15-3520-52	15-3520-52	15-3520-52	15-3520-52	15-3520-52	15-3520-52	15-3520-52	15-3520-52	15-3520-52	15-3520-52
16	Shaft	1	2A	2A	2A	2A	2A	2A	2A	2A	2A	2A	2A	2A	2A	2A
17	Piston, Outer	2	ST2B	ST2B	ST2B	ST2B	HT2B	HT2B	HT2B	ST2B	ST2B	ST2B	ST2B	ST2B	ST2B	ST2B
18	Piston, Inner	2	ST2C	ST2C	ST2C	ST2C	ST2C	ST2C	ST2C	ST2C	ST2C	ST2C	ST2C	ST2C	ST2C	ST2C
19	Air Chamber, Counter Sunk	2	3B	3B	3B	3B	3B	S3B	W3B	3B	S3B	W3B	S3B	3B	W3B	S3B
20	Air Chamber Screw	4	3C	3C	S3CV	S3C	3C	S3C	3C	3C	S3C	3C	S3C	3C	3C	3C
21	Air Chamber Cone Nut	4	22D	22D	S22D	S22D	22D	S22D	22D	22D	S22D	22D	S22D	22D	22D	22D
22	Water Chamber	2	50	50	50	50	H50	H50	H50	S560	S50	S50	S50	W50	W50	S50
23	Discharge Manifold	1	51	51	B51	B51	H51	H51	H51	S51	S51	S51	S51	W51	W51	SG51
24	Inlet Manifold	1	52F	52F	B52F	B52F	H52	H52	H52	S52	S52	S52	S52	W52	W52	SG52
25	Diaphragm	2	TF5	TF5	TF5	TF5	TF5	TF5	TF5	TF5	TF5	TF5	TF5	TF5	TF5	TF5
26	Back-up Diaphragm[4]	2	15-1060-56	15-1060-56	15-1060-56	15-1060-56	15-1060-56	15-1060-56	15-1060-56	15-1060-56	15-1060-56	15-1060-56	15-1060-56	15-1060-56	15-1060-56	15-1060-56
27	Valve Ball	4	TF55	TF55	TF55	TF55	TF55	TF55	TF55	TF55	TF55	TF55	TF55	TF55	TF55	TF55
28	Valve Seat	4	A56	A56	A56	A56	H56	H56	H56	S56	S56	S56	S56	CS56	CS56	S56
29	Large Clamp Band	2	S11	S11	S11	S11	S11	S11	S11	S11	S11	S11	S11	S11	S11	SG11
30	Large Carriage Bolt	4	S11C	S11C	S11C	S11C	S11C	S11C	S11C	S11C	S11C	S11C	S11C	S11C	S11C	S11C
31	Large Hex Nut[2]	4	S11D	S11D	S11D	S11D	S11D	S11D	S11D	S11D	S11D	S11D	S11D	S11D	S11D	N/A
32	Small Clamp Band	4	S54	S54	S54	S54	S54	S54	S54	S54	S54	S54	S54	S54	S54	S54B
33	Small Carriage Bolt	8	S54B	S54B	S54B	S54B	S54B	S54B	S54B	S54B	S54B	S54B	S54B	S54B	S54B	S54B
34	Small Hex Nut[3]	8	S30D	S30D	S30D	S30D	S30D	S30D	S30D	S30D	S30D	S30D	S30D	S30D	S30D	N/A
35	Teflon® Valve Seat O-Ring	4	56T	56T	56T	56T	56T	56T	56T	56T	56T	56T	56T	56T	56T	SP30C
36	Muffler (optional)	1	70B	70B	70B	70B	70B	70B	70B	70B	70B	70B	70B	70B	70B	70B

[1]Air Valve Assembly includes parts thru 1U.
[2]SNR pump large clamp band comes with SP11WN wing nut and SP11C washer.
[3]SNR pump small clamp band comes with SP30WN wing nut and SP30C washer.
[4]Neoprene back-up diaphragm, P/N TF5B, is available upon request. Please consult your local distributor.

Teflon — Registered Trademark E.I. DuPont de Nemours & Co.

ELASTOMER OPTIONS FOR MODEL M15

MATERIAL	DIAPHRAGMS (2) PER PUMP (ITEM #34)	VALVE BALLS (4) PER PUMP (ITEM #35)	VALVE SEATS (4) PER PUMP
Buna-N	BN5	BN55	BN56
Neoprene	5	55	56
Nordel (EPDM)	ND5	ND55	ND56
Polyurethane	PU5	15-1080-50	15-1120-50
Saniflex™	FG5	FG55	FB56
Teflon® PTFE	TF5[1]	TF55	N/A
Viton	VT5	VT55	VT56
Wil-Flex™	15-1010-58	15-1080-58	15-1120-58
Aluminum	N/A	N/A	A56[2]
Carbon Steel	N/A	N/A	CS56[2]
Hastelloy	N/A	N/A	H56[2]
Stainless Steel	N/A	N/A	S56[2]

NOTES:

[1]Teflon® diaphragms utilize a Saniflex™ back-up diaphragm (P/N 15-1060-56). Neoprene back-up diaphragm, P/N TF5B, is available upon request. Please consult your local distributor.

[2]Metallic valve seats utilize a Teflon® O-ring, P/N 56T.

M15

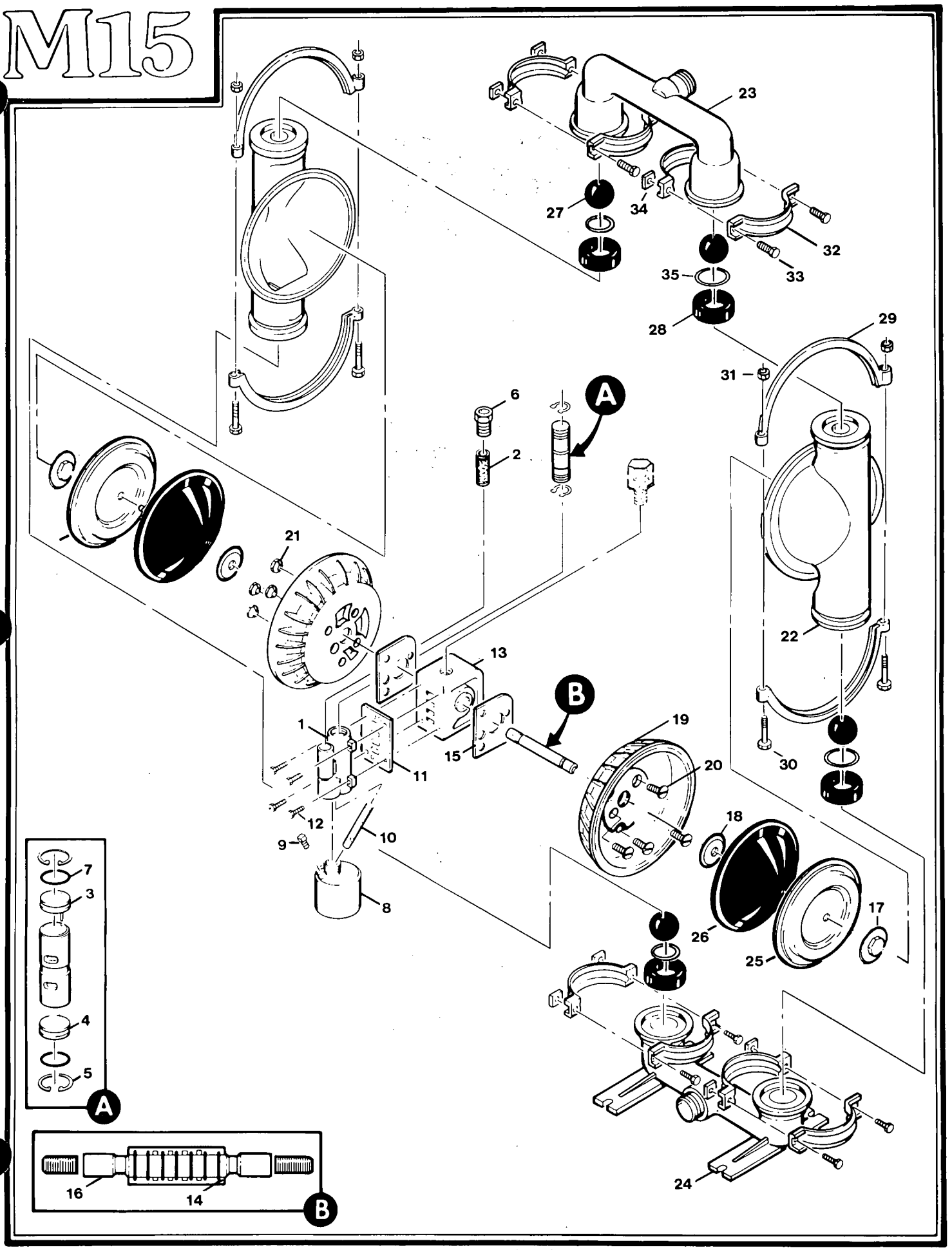

23
27
34
32
33
35
28
29
31
6
A
2
21
22
13
B
1
19
15
20
11
30
12
18
9
10
7
3
8
17
26
25
4
5
A
24
16
14
B

WILDEN'S SPECIALTY PUMPS

M8 STALLION

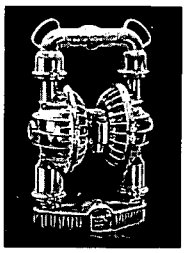

2" inlet. Solids clearance up to ¾". Built to handle rough treatment: cast-in handles for easy portability, reinforced shaft and high impact polyurethane base.

SOLENOID-OPERATED

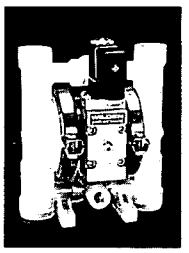

Each stroke of this pump is controlled by electrical impulses making it ideal for batching, metering, and other electrically controlled dispensing applications.

M1 ULTRAPURE III

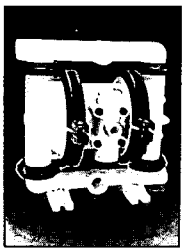

½" inlet. Teflon® PFA construction, temperatures to 300°F. Up to 14 GPM. Materials of construction have been selected to reduce contamination while providing a safer work environment.

FOOD PROCESSING

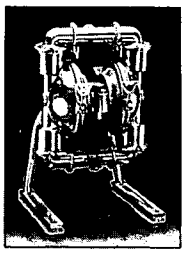

Constructed with FDA approved materials: bead blasted 316 Stainless Steel construction with tri-clamp porting and wing-nut fasteners. Foodmaster™ (pictured) is USDA accepted.

THE WILDEN PUMP LINE

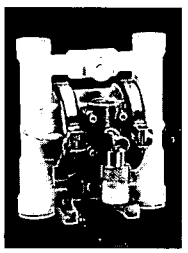

M.025 (CHAMP SERIES)

MODEL M.025

- ¼" Inlet
- 125 Max. PSIG
- Up To 4.5 GPM
- Max. Particle Size: 1/64"

Materials of Construction: PVDF, Acetal, Polypropylene, Carbon-filled Acetal

Suction Lift:

(Rubber)	Dry: 4.5'
	Wet: 25'
(Teflon®)	Dry: 4.5'
	Wet: 25'

LUBE-FREE AVAILABLE

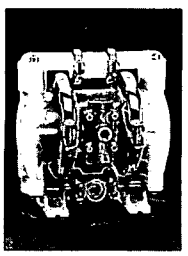

M1 PLASTIC (CHAMP SERIES)

MODEL M1

- ½" Inlet
- 110 Max. PSIG
- Up To 14 GPM
- Max. Particle Size: 1/16"

Materials of Construction: Polypropylene, PVDF, Teflon®, Graphite-filled Polypropylene, Aluminum, Stainless Steel

Suction Lift:	Plastic	Metal
(Rubber)	Dry: 10'	10'
	Wet: 25'	25'
(Teflon®)	Dry: 7'	8'
	Wet: 25'	25'

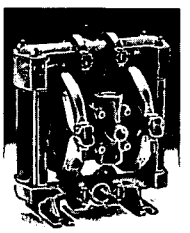

M1 METAL

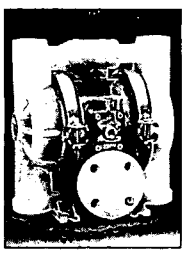

M2R PLASTIC (CHAMP SERIES)

MODEL M2

- 1" Inlet
- 125 Max. PSIG
- Up To 37 GPM
- Max. Particle Size: ⅛"

Materials of Construction: Aluminum, Stainless Steel, Hastelloy, Polypropylene, PVDF

Suction Lift:	Plastic	Metal
(Rubber)	Dry: 17'	19'
	Wet: 25'	25'
(Teflon®)	Dry: 7'	8'
	Wet: 25'	25'

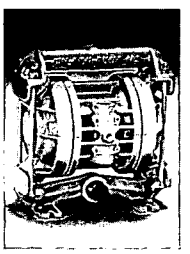

M2 METAL

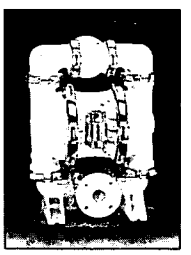

M4 PLASTIC (CHAMP SERIES)

MODEL M4

- 1½" Inlet
- 125 Max. PSIG
- Up To 73 GPM
- Max. Particle Size: 3/16"

Materials of Construction: Aluminum, Cast Iron, Stainless Steel, Hastelloy, Polypropylene, PVDF, Teflon® PFA

Suction Lift:	Plastic	Metal
(Rubber)	Dry: 17'	21'
	Wet: 25'	25'
(Teflon®)	Dry: 7'	7'
	Wet: 25'	25'

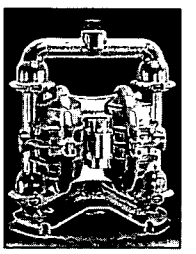

M4 METAL

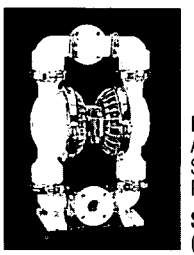

M8 PLASTIC (CHAMP SERIES)

MODEL M8

- 2" Inlet
- 125 Max. PSIG
- Up To 155 GPM
- Max. Particle Size: ¼"

Materials of Construction: Aluminum, Cast Iron, Stainless Steel, Hastelloy, PVDF, Polypropylene

Suction Lift:	Plastic	Metal
(Rubber)	Dry: 17'	20'
	Wet: 25'	25'
(Teflon®)	Dry: 8'	8'
	Wet: 25'	25'

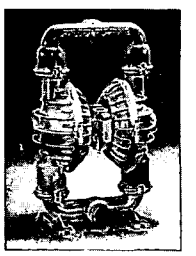

M8 METAL

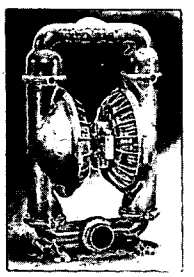

M15

MODEL M15

- 3" Inlet
- 125 Max. PSIG
- Up To 230 GPM
- Max. Particle Size: ⅜"

Materials of Construction: Aluminum, Cast Iron, Stainless Steel, Hastelloy

Suction Lift:

(Rubber)	Dry: 17'
	Wet: 25'
(Teflon®)	Dry: 14'
	Wet: 25'

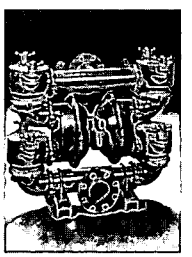

M20

MODEL M20

- 4" Inlet
- 125 Max. PSIG
- Up To 304 GPM
- Max. Particle Size: 1⅜"

Materials of Construction: Cast Iron

Suction Lift:
Dry: 13'
Wet: 25'

Compressors, dryers and pumps
systems and service

Kentrol Inc
compressor and pump division
Post Office Box 219, Waterville, Maine 04903-0219
207 873-7741 FAX 207 873-2945

THE INSCO GROUP
Quality Starts Here

WILDEN PUMP & ENGINEERING COMPANY
22069 Van Buren St., Grand Terrace, CA 92313
(909) 422-1730 • FAX (909) 783-3440

ZEKS TECHNICAL MANUAL

REFRIGERATED AIR DRYERS

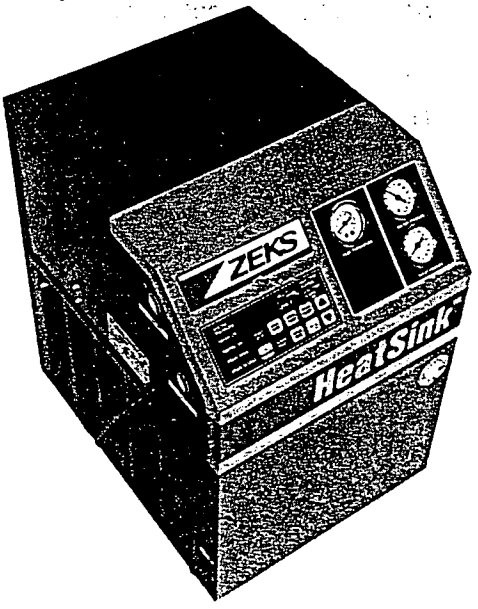

MODELS 10 THRU 50 HEATSINK

TABLE OF CONTENTS

		PAGE
1.	INTRODUCTION	1
2.	ABBREVIATED WARRANTY	1
3.	UNIT SPECIFICATIONS	2
4.	RECEIVING AND INSPECTION	2
5.	SAFETY AND OPERATION PRECAUTIONS	3
6.	PRINCIPLES OF OPERATION	4
7.	INSTALLATION/INITIAL START-UP	6
8.	SCHEDULED MAINTENANCE	7
9.	TROUBLESHOOTING	9
10.	PARTS LIST	13

ZEKS AIR DRIER CORPORATION
Malvern Industrial Park, Box 396
Malvern, Pennsylvania 19355
610-647-1600 800-888-2323
FAX 610-647-9199

1. INTRODUCTION

The Zeks Heatsink refrigerated air dryer removes moisture, oil vapor, and other contaminants from the compressed air. These contaminants are detrimental to pneumatically operated appliances, controls, instruments, machinery and tools. This process is accomplished by cooling the air with a refrigeration unit to a temperature at which moisture in the air is condensed and separated from the airstream. The temperature the air is cooled to, normally between 36 and 50°F, is known as dewpoint. This dryer can be easily installed into various pneumatic systems in which dry air is required or desired. Please refer to Principles of Operation for complete operating details.

2. ABBREVIATED WARRANTY

Zeks refrigerated dryers are warranted to be free from defects in material and workmanship for a period of 18 months from date of shipment, provided the equipment is used according to Zeks recommended usage. Zeks' liability is limited to repair of, replacement, or refund of purchase price paid for, in kind for 18 months from date of shipment. Zeks offers an additional 42 months of prorated warranty for the replacement of the refrigerant compressor in accordance with the following schedule. Zeks will not pay labor on any unit older than 18 months.

Pro-rate charges of list prices:	18 months	No charge
	2nd year (6 months)	30%
	3rd year	50%
	4th year	70%
	5th year	90%

To validate warranty, the warranty registration card must be completed and returned at the time of unit start up. IN NO EVENT SHALL ZEKS BE LIABLE OR RESPONSIBLE FOR INCIDENTAL OR CONSEQUENTIAL DAMAGES, even if the possibility of such incidental or consequential damages has been made known to Zeks Air Drier Corporation. In addition, the usual maintenance and replacement type products are not covered by this warranty. For units sold internationally, warranty will be as follows:

18 months from date of shipment, parts and labor Mexico and Canada
18 months from date of shipment, parts only outside the North American continent

The warranties expressed above are in lieu of and exclusive of all other warranties. There are no other warranties, expressed or implied, except as stated herein. There is no implied warranties of merchantability or fitness for a particular purpose, which are specifically disclaimed.

3. UNIT SPECIFICATIONS

REFRIGERATED DRYERS NOMENCLATURE

NOMINAL FLOW SCFM	TYPE	DESIGN SERIES	CONDENSER TYPE	POWER	OPTIONS
10, 18, 24, 35 & 50	HS=Heatsink	B, C, D	A=Air Cooled	1=115-1-60	

O = STANDARD
D = NEMA 12 (35 & 50)
H = NEMA 4 (35 & 50)
G = GAUGE PACKAGE
W = WEATHERPROOF
F = D + G
K = H + G
L = W + G

O = STANDARD
C = COMPUSTAT
D = DATALINK W/COMPUSTAT
T = TIME DRAIN
Z = NON-STANDARD
A = HIGH TEMP INDICATOR LIGHT

FOR GENERIC MANUALS

SEE ENGINEERING SPECIFICATIONS

ON THE BACK COVER OF THIS MANUAL

4. RECEIVING AND INSPECTION

4.1 INSPECTION

Upon receiving your Zeks air dryer please inspect the unit closely. All Zeks products are shipped in packages or crates that have a SHOCKWATCH® protection label attached to them. The instructions are clearly indicated on this label and indicate any potential rough handling by the carrier. If rough handling has been noticed, please note it on your delivery receipt, especially if the dryer will not be immediately uncrated. Obtaining the delivery person's signed agreement to any noted damages will facilitate any insurance claims.

4.2 UNPACKING AND HANDLING

WARNING

Under no circumstances should any person attemp to lift heavy objects without proper lifting equipment (i.e., crane, hoist, slings or fork truck). Lifting any unit without proper lifting equipment, can cause serious injury.

5. SAFETY AND OPERTION PRECAUTIONS

Because an air dryer is pressurized and contains rotating parts, the same precautions should be observed as with any piece of machinery of this type where carelessness in operation or maintanance is hazardous to personnel. In addition to the many obvious safety rules that should be followed with this type of machinery, the safety precautions as listed below must be observed:

1. Only qualified personnel shall be permitted to adjust, perform maintenance or repair this air dryer.
2. Read all instructions completely before operating unit.
3. Pull main electrical disconnect switch and disconnect any separate control lines, if used, before attempting to work or perform maintenance on the unit.
4. Do not attempt to service any part while macine is in an operational mode.
5. Do not attempt to remove any parts without first relieving the entire air system of pressure.
6. Do not attempt to remove any part of the refrigeration system without removing and containing refrigerant in accordance with the EPA and local regulations.
7. Do not operate the dryer at pressures in excess of its rating.
8. Do not operate the dryer without guards, shields and screen in place.
9. Inspect unit daily to observe and correct any unsafe operating conditions.

OSHA Heading Descriptions

DANGER

"Danger" is used to indicate a hazardous situation which has a high probability of death or severe injury. Danger should not be considered for property damage accidents unless personal injury risk is present.

WARNING

"Warning" is used to indicate a hazardous situation which has some probability of death or severe injury. Warning should not be considered for property damage accidents unless personal injury risk is present.

CAUTION

"Caution" is used to indicate a hazardous situation which may result in minor or moderate injury.

NOTICE

"Notice" is used to indicate a statement of company policy as the message relates directly or indirectly to the safety of personnel or protection of property. Notice should not be associated directly with a hazard or hazardous situation and must not be used in place of "DANGER," "WARNING," or "CAUTION."

NOTICE

The user of any air dryer manufactured by Zeks Air Drier Corporation, is hereby warned that failure to follow the preceding Safety and Operation Precautions can result in personnel injuries or equipment damage. However, Zeks Air Drier Corporation, does not state as fact nor does it mean to imply that the preceding list of Safety and Operating Precautions is all inclusive, and further that the observance of this list will prevent all personnel injuries or equipment damage.

6. PRINCIPLES OF OPERATION

NOTICE

For all models with optional Compustat feature, refer to addendum.

6.1 INTRODUCTION

Zeks HeatSink dryers remove water vapor from compressed air by cooling the air temperature to approximately 36 and 50°F. This causes water vapor to condense into water droplets which can then be easily removed from the air. The major systems of the dryer which contribute to its operation are: the Air System, Moisture Removal System, Refrigeration System and the Controls. The following paragraphs describe each of the systems in greater detail.

6.2 AIR SYSTEM

This system consists of the dryer components which are in contact with the compressed air. Referring to Figure 1 and following the bold "air line," saturated air from the compressor enters the dryer at the inlet fitting, moves through the chiller where it is cooled and the water vapor is caused to condense, then through the moisture separator in which the water droplets are removed from the air stream, finally leaving the dryer through the air out fitting as dry air ready for use. The chiller section consists of the air cooling heat exchanger and the refrigerant system evaporator heat exchanger (cooler) which are both immersed in a reservoir filled with heat transfer fluid. The evaporator cools the fluid which in turn cools the air.

6.3 MOISTURE REMOVAL SYSTEM

Water droplets are removed from the air stream in the separator. As the air goes through the separator it is caused to spin, slow down and then change direction. This causes the water droplets to fall out of the air stream and collect in the bottom of the separator. The collected water is removed from the separator by an automatic trap/drain with a float valve or by an optional solenoid valve. For the Automatic Float Drain, no adjustment is required. The internal float rises as the moisture level increases. As the float rises to a predetermined level, the valve opens to release all discharged moisture.

The solenoid valve is operated by a solid state timer or the optional *Compustat controller. For adjustment please note the following:

- To obtain the optimum time values for operation of the solenoid drain valve, set the off-time adjustment knob to 30 minutes and the on-time adjustment knob to 8 seconds.
- After running the unit under full rated flow for approximately 30 minutes verify that when the solenoid drain opens, all of the water is discharged plus a small burst of air.
- If a small amount of water and a large amount of air is discharged, decrease the on-time setting or increase the off-time setting. If there is all water and no air has been discharged, increase the on-time setting or decrease the off-time setting.
- The on/off time settings will vary according to seasonal conditions. During the summer, when more moisture is present in the air system, a shorter on-time increasing the valve opening frequency is required. A longer valve off-time may be used during winter months, when moisture levels are lower.

FLOW DIAGRAM
FIGURE 1

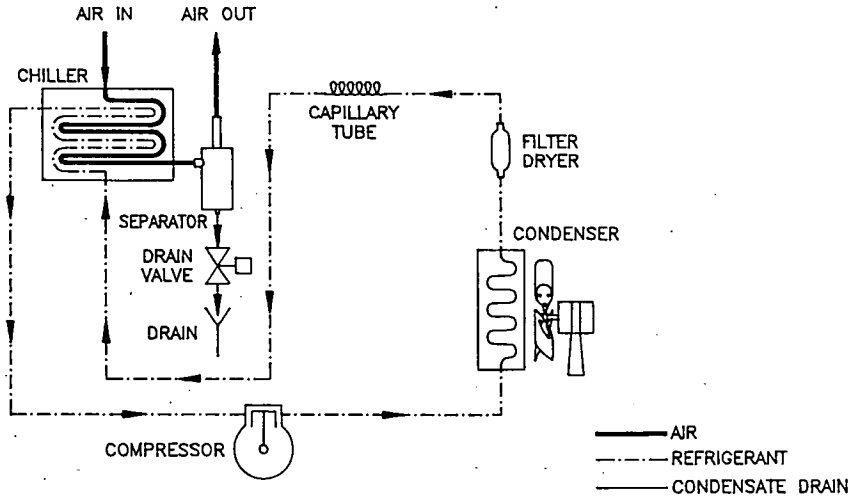

6.4 REFRIGERATION SYSTEM

The Refrigeration System consists of all the components which handle (R-22). This is a hermetically sealed closed loop system. Referring to Figure 1 and following the dot-dash "refrigerant line," refrigerant is shown leaving the chiller evaporator section where in the process of removing heat it is changed from a low pressure liquid into a low pressure gas. This gas enters the suction side of the compressor where it is compressed into a high pressure gas. The high pressure gas is cooled in the air cooled condenser section until it becomes a high pressure liquid. It then goes through a permanent filter dryer that insures the refrigerant system is free of contaminants. A small diameter capillary tube meters the refrigerant for introduction into the chiller evaporator. The pressure is reduced upon entering the chiller evaporator where it removes heat from the heat transfer fluid.

6.5 CONTROLS

The ZEKS HeatSink dryer incorporates automatic controls for proper operation. A constant temperature of the heat transfer fluid is maintained by the cycling of the refrigerant compressor in response to varying air flow and temperature. The primary control is a thermostat which operates the compressor. Upon an increase in the temperature of the heat transfer fluid, the compressor is cycled on. When the fluid is cooled to its predetermined set point, the compressor is cycled off. The heat transfer fluid functions as a thermal storage mass in the "HeatSink" dryer.

All dryer controls are preset at the factory. A refrigerant suction pressure gauge is supplied as standard. When the refrigeration system is running the pressure reading will pull down to 40 psig or lower. After the heat transfer fluid has been cooled and the refrigeration system is shut off, the system pressure will equalize with a gauge reading typically between 65 and 100 psig depending on ambient temperature.

When the optional gauge package is included, inlet air temperature and outlet air pressure gauges are supplied in addition to the standard suction pressure gauge.

- The inlet air temperature gauge monitors the compressed air temperture entering the dryer. During normal dryer operation, the temperature reading should be 100°F or lower.

- The outlet air pressure gauge monitors the exiting compressed air pressure. During normal operation, the outlet air pressure should be within 5 psig of the compressed air pressure entering the dryer (no gauge supplied).

The optional high temp light monitors the air temperature exiting the outlet side of the heat exchanger. During normal operation, the outlet air should be 40°F or lower. If the outlet air should reach a temp of 53°F ±2°F the high temp light will be activated.

7. INSTALLATION START-UP

7.1 LOCATING AND MOUNTING

The dryer should not be located in an area where ambient temperature is likely to exceed 113°F (45°C) or be less than 50°F (10°C). On installations with a relatively steady flow rate, the dryer is normally connected after the air receiver. If loads fluctuate widely, then the dryer should be ahead of the receiver and sufficient storage capacity downstream of the dryer should then be available to prevent excessive air flow through the dryer.

The dryer must be located in an area that provides sufficient clearance from walls and other adjoining equipment to allow easy access for servicing and maintenance requirements. A minimum of 18 inches is required to allow free air flow to the condenser inlet.

NOTICE

Failure to comply to the above instructions may result in equipment malfunction and will void warranty.

7.2 PIPING AND VALVES

Install piping, fittings and accessory items as indicated in Figure 2. For bypass and isolating purposes, valves (A), (B), and (C) must be installed (not furnished). In order to test and isolate the drain trap without depressurizing the dryer, service valves (D) and (E) must be installed (not furnished).

To operate dryer, all valves shown in Figure 2 are to be closed except valves (B), (C), and (D). Valve (A) is used for bypass purposes and valve (E) is for test and manual drain purposes.

TYPICAL PIPING ARRANGEMENT

FIGURE 2

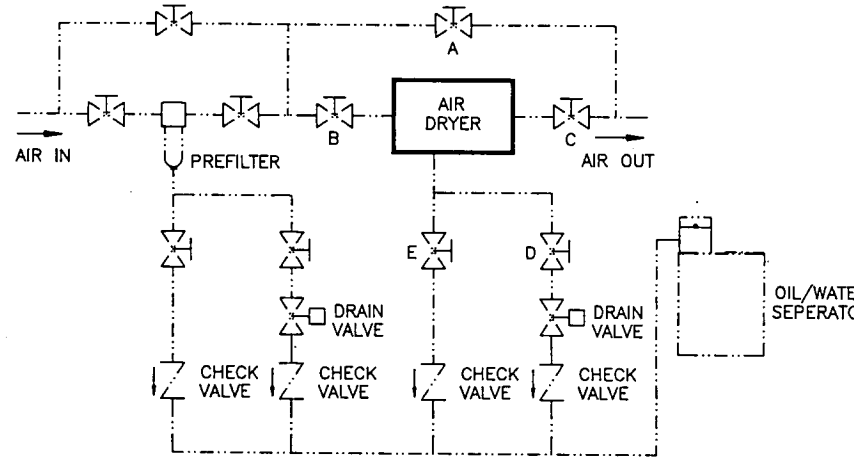

UNIT AS DELIVERED
OPTIONAL ACCESSORY ITEMS

NOTE : DRAIN TUBE MUST NOT RISE OR BE CONNECTED TO EXCESSIVELY LONG PIPE WHICH MAY CREATE BACK PRESSURE. A CONNECTION TO OPEN FLOOR DRAIN IS RECOMMENED.

7.3 FILTRATION

To protect the air dryer from residual compressor oil and insure maximum dryer performance, a prefilter is recommended. Highly efficient prefilters and afterfilters sized to your drying application can be provided by Zeks, available factory installed. Call your local distributor to select the filter that best suits your filtration requirements. In addition to air filtration, condensate discharge oil/water separators are also available to address the stringent EPA regulations.

7.4 ELECTRICAL CONNECTION

Models 10 thru 24 are supplied with a three wire, 115V cord assembly as standard and the only connection required is to plug this into a suitable 115V/1/60HZ power outlet.

For all Zeks equipment, a suitable fused disconnect switch in accordance with national and local code requirements is recommended. See Section 3 for voltage requirements and load data.

NOTICE

Never wire directly or connect any additional wires to the compressor junction box. This will cause severe system malfunction.

NOTICE

Care must be used when choosing the circuit of single phase machines to ensure that no excessive voltage variations occur. This may affect the starting of the compressor and in extreme cases may cause a compressor burn out. Maximum allowable voltage variation is +15% and −10% from rated voltage. Voltage variations exceeding the specified tolerances will void warranty.

7.5 INITIAL STARTUP

NOTICE

For all models with optional Compustat feature refer to addendum.

After installation or a prolonged shutdown, start the dryer with no air load (no air flow). This enables the dryer to reach its proper operating temperature in the shortest time possible (typically within 30 minutes). The following conditions should be observed during startup:

- The suction pressure gauge will typically pull down between 30 and 50 psig.

For Models 35 and 50:

- The "Power On" light should be on.
- The "Refrig On" light should be on.

After the refrigeration system shuts off, airflow may be introduced to the dryer.

8. SCHEDULED MAINTENANCE

8.1 INTRODUCTION

The Zeks HeatSink refrigerated air dryer requires little maintenance. These dryers utilize hermetically sealed compressors and do not require any lubrication. Fan motor bearings are prepacked and sealed. However, it is recommended to inspect and service your dryer at regular intervals to obtain maximum performance out of your dryer.

8.2 REFRIGERANT CONDENSER

For proper operation, it is essential that the condenser fins are free of dirt and dust. Regular cleaning is therefore required. If the dryer is located in an area where dust is excessive, a condenser ambient air filter should be fitted.

8.3 CONDENSATE DISCHARGE SYSTEM

Occasionally, on a minimum of a monthly basis, the operation of the automatic drain should be checked, as well as removed and cleaned to ensure no debris from the system is trapped inside. A block and bypass valve arrangement, as described in Figure 2, shows how this can be achieved for proper servicing, without shutting off air to the dryer.

WARNING

If your dryer is installed without drain isolation valves, failure to depressurize the dryer may result in serious injury. You must not remove the trap without depressurizing the units

Should these valves not be in your system, ensure that the air has been shut off to the dryer and that the pressure has been discharged from the unit. The automatic trap has a schrader type valve in the black outlet nipple. Pressing this up will allow you to check that the air has been discharged. See Figure 5 for detailed instruction on the trap.

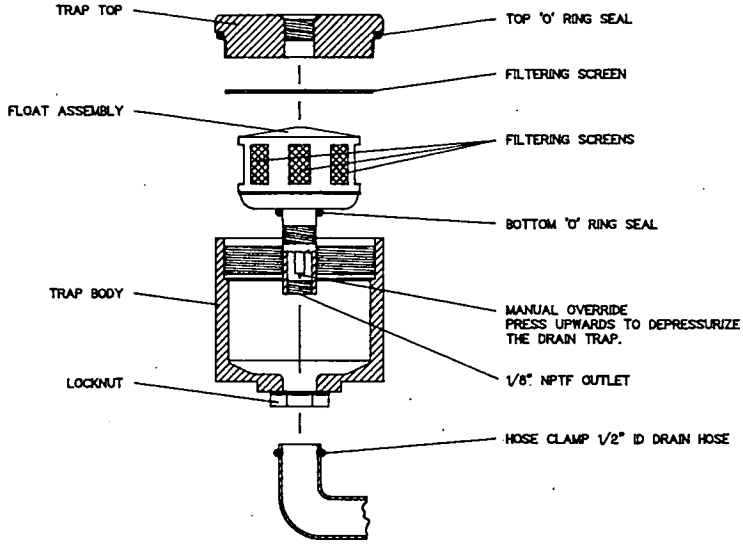

DRAINTRAP DETAILS

FIGURE 5

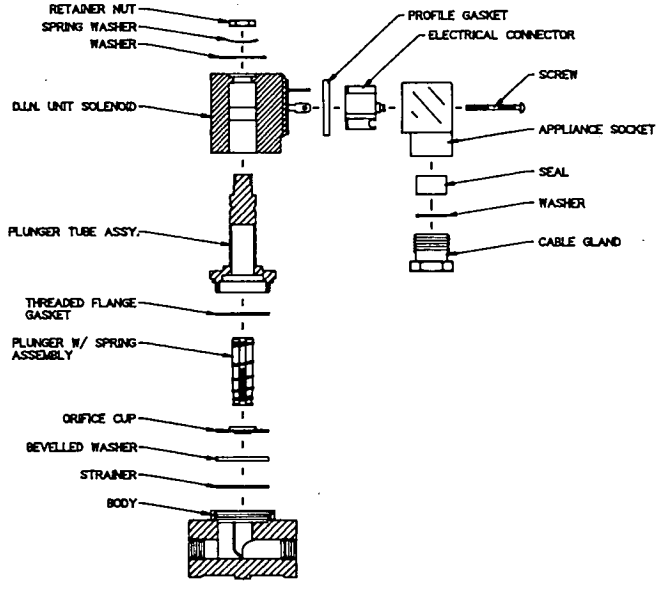

SOLENOID VALVE

9. TROUBLESHOOTING

9.1 INTRODUCTION

The ZEKS HeatSink dryer is designed for reliable, trouble free operation. In the event of any dryer malfunction, the guide on the next page has been developed to facilitate problem identification and corrective actions.

WARNING

An air dryer always operates under pressure. Before any maintenance item that requires disassembly of any piping, fittings, valves or other components is performed, the dryer must be isolated from the compressed air stream and fully depressurized.

WARNING

Prior to working on the unit, make sure that all circuit breakers or disconnect switches are tagged off "OUT OF SERVICE".

9.2 TROUBLESHOOTING

PROBLEM	SYMPTOM	POSSIBLE CAUSE	CORRECTIVE ACTION
Moisture down stream	Dryer cooling airstream (Outlet substantially cooler than inlet)	Drain valve failure	Dismantle and clean, repair or replace as required
		Excessive flow	Check inlet and outlet pressures and system design capacity. Correct cause of excessive flow
	Inlet and outlet temperatures are the same	Dryer by-pass valve not closed	Close by-pass valve
		No power to the dryer	Check power supply and fuses/circuit breakers
		High suction pressure	Clean condenser fins
		Refrigerant leak	Check suction pressure gauge and if 0 psig, turn dryer off and contact your distributor
		Compressor not running	Clean condenser fins
			Check ambient temperature and reduce below 120°F
			Check fan motor if not running, check your local distributor
			Contact your local distributor for further assistance
High pressure drop across dryer	Outlet pressure substantially lower than inlet pressure	Inlet and outlet valves not completely open	Open valves
		Inlet and outlet filters blocked up	Change filter elements
		No dryer prefilter, and heat exchanger has become clogged	Flush air system as required, check your local distributor
		System operating temperature is below 32°F	Consult your local distributor for further assistance

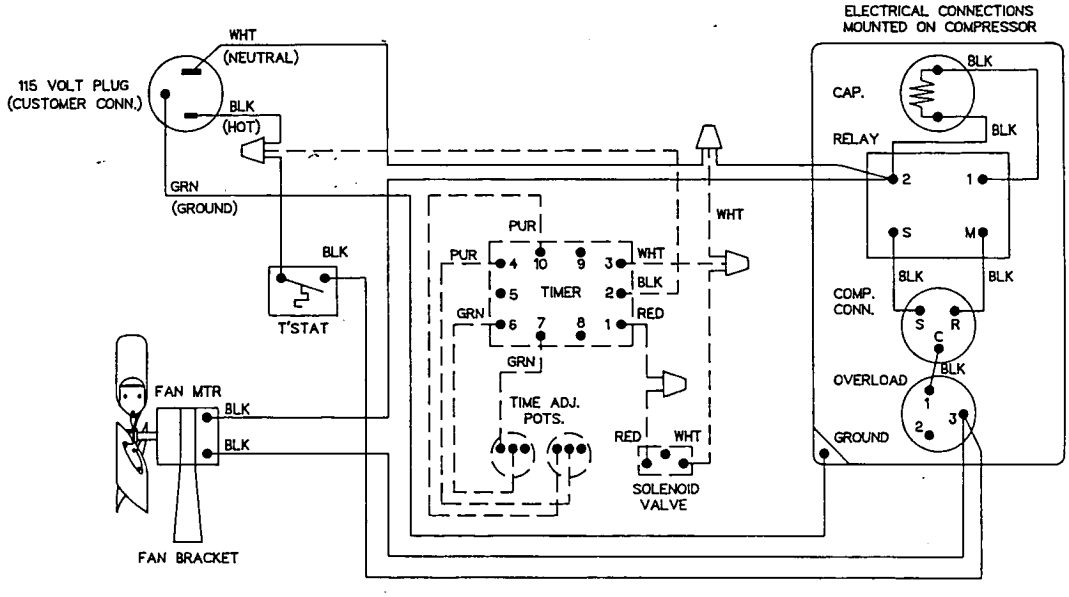

NOTE:

1. - - - OPTIONAL EQUIPMENT SEE SECTION #3 FOR SPECIFIC OPTIONS ON YOUR DRYER.

WIRING DIAGRAM 10/18/24 HS

115/1/60 VOLT

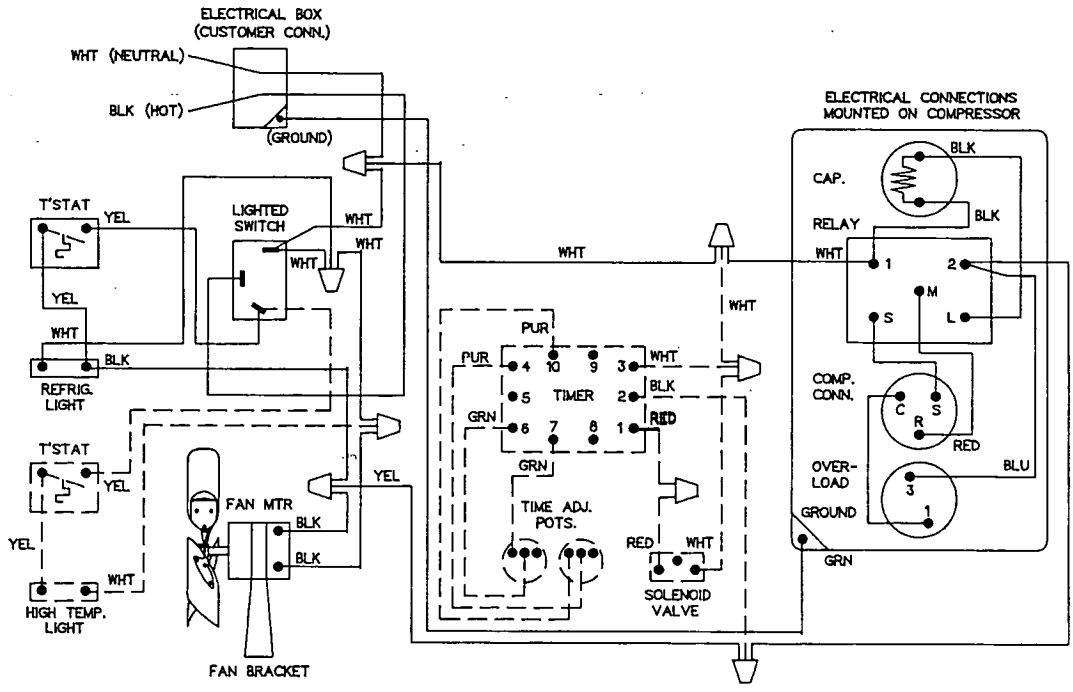

NOTE:

1. - - - OPTIONAL EQUIPMENT SEE SECTION #3 FOR SPECIFIC OPTIONS ON YOUR DRYER.

WIRING DIAGRAM 35 & 50 HS

115/1/60 VOLT

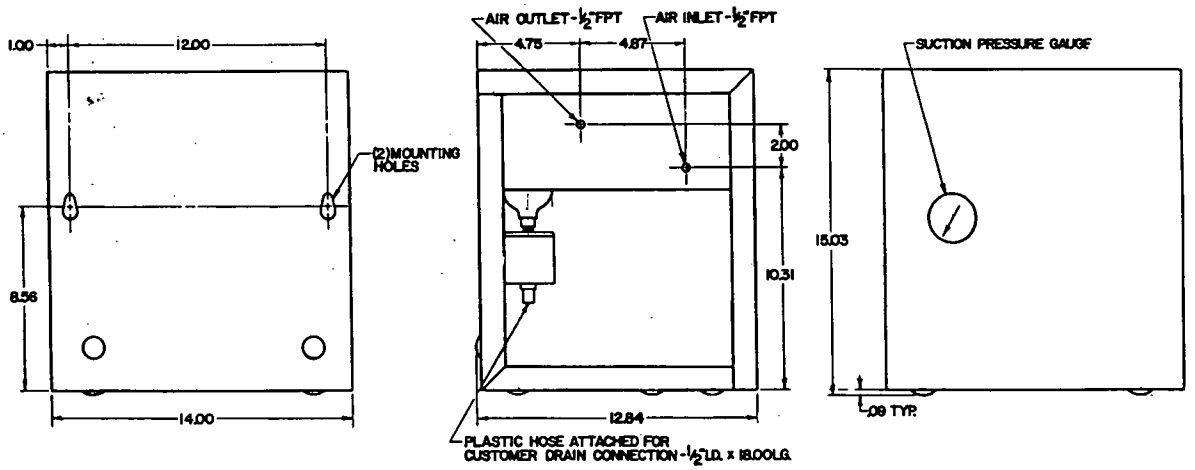

OUTLINE DIMENSIONS 10/18/24

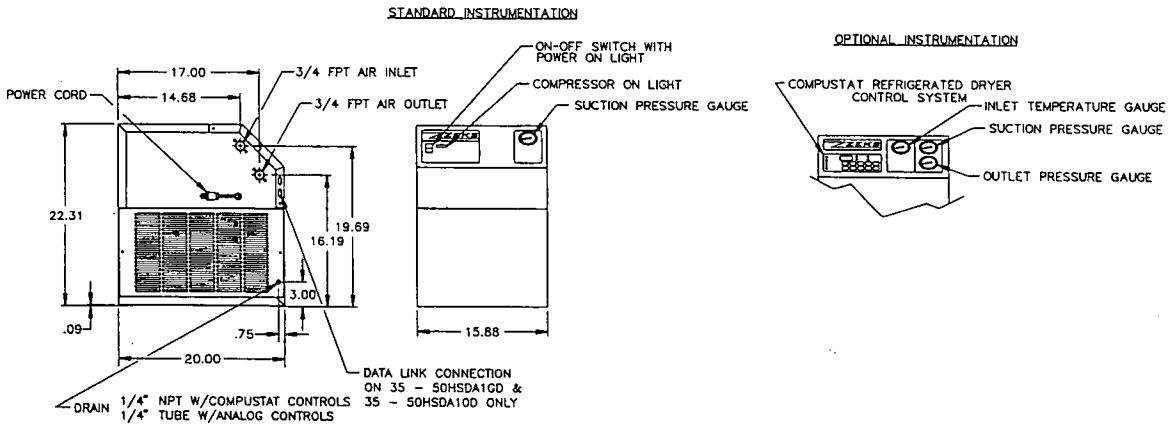

OUTLINE DIMENSIONS 35/50

10. PARTS LIST

NOTES: 1.) Items 10, 11, 14 and 15 may not be included dependent on model size, voltage and optional features.
2.) Item 8 may be located differently among units 10 thru 50.
3.) Compressor and drain locations are reversed on model 10 thru 24.

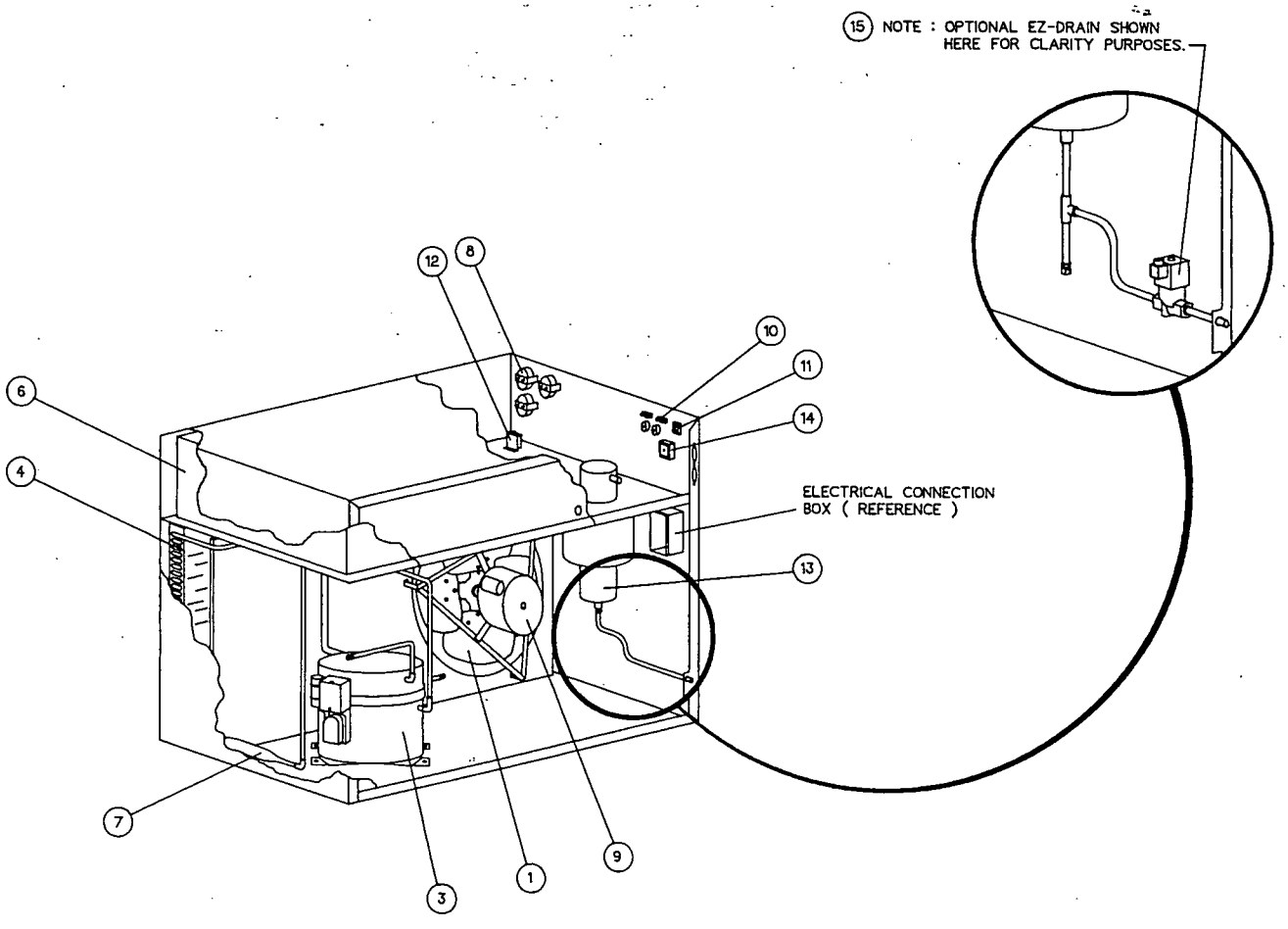

PARTS DIAGRAM

FOR GENERIC MANUALS

SEE RECOMMENDED SPARE PARTS LIST

ON THE INSIDE BACK COVER OF THIS MANUAL

RECOMMENDED SPARE PARTS LIST

FOR 10-50 HS, AIR-COOLED

AIR-COOLED ONLY						
ITEM	PARTS & DESCRIPTION	10HSBA100	18HSBA100	24HSBA100	35HSDA100	50HSDA100
1	BLADE, FAN	698303	698303	698459	697186	697186
2	BRACKET, WALL MOUNTING	702789	702789	702789	—	—
3	COMPRESSOR	699842	699842	699841	699826	699827
4	CONDENSER	698304	698304	698401	697172	697172
5	CORD ASSEMBLY	600135	600135	600135	600135	681532
6	EXCHANGER	704083	704083	704084	707010	707010
7	FILTER-DRYER	698044	698044	698044	698044	698044
8	GAUGE, SUCTION PRESSURE	697306	697306	697306	697306	697306
9	MOTOR, FAN	698302	698302	698302	697304	697304
10	REFRIGERATION ON/OFF LIGHT	—	—	—	697298	697298
11	SWITCH, ON/OFF W/LIGHT	—	—	—	699611	699611
12	THERMOSTAT	697277	697277	697277	697277	697277
13	T-O TRAP	697360	697360	697360	697360	697360
14	TIMER	—	—	—	699270	699270
15	VALVE, SOLENOID	—	—	—	699324	699324

ENGINEERING SPECIFICATIONS

10-50 HS, AIR-COOLED

COMPRESSORS		RATINGS			FANS	RATINGS			MAX. FUSE SIZE	MIN. CIRCUIT AMPACITY	REFRIGERANT		WEIGHT	
MODEL NO.	VOLTS/PH/HZ	RLA	HP	LRA	NO. OF FANS	FLA	HP	LRA			TYPE	CHARGE OZ.	LBS.	KG.
10HSBA100	115/1/60 110/1/50	4.4	1/5	27.0	1	0.5	6 Watts	.7	15	6.0 Amp	R22	5 oz.	75	34
18HSBA100	115/1/60 110/1/50	4.4	1/5	27.0	1	0.5	6 Watts	.7	15	6.0 Amp	R22	5 oz.	75	34
24HSBA100	115/1/60 110/1/50	7.0	1/3	29.0	1	0.5	6 Watts	.7	20	9.25 Amp	R22	5 oz.	90	41
35HSDA100	115/1/60 110/1/50	7.3	1/3	48.0	1	1.8	1/18	2.3	20	10.92 Amp	R22	16 oz.	165	75
50HSDA100	115/1/60 110/1/50	8.8	1/2	58.8	1	1.8	1/18	2.3	25	12.80 Amp	R22	20 oz.	165	75

REV. 6/94

ZEKS ADDENDUM

REFRIGERATED AIR DRYERS

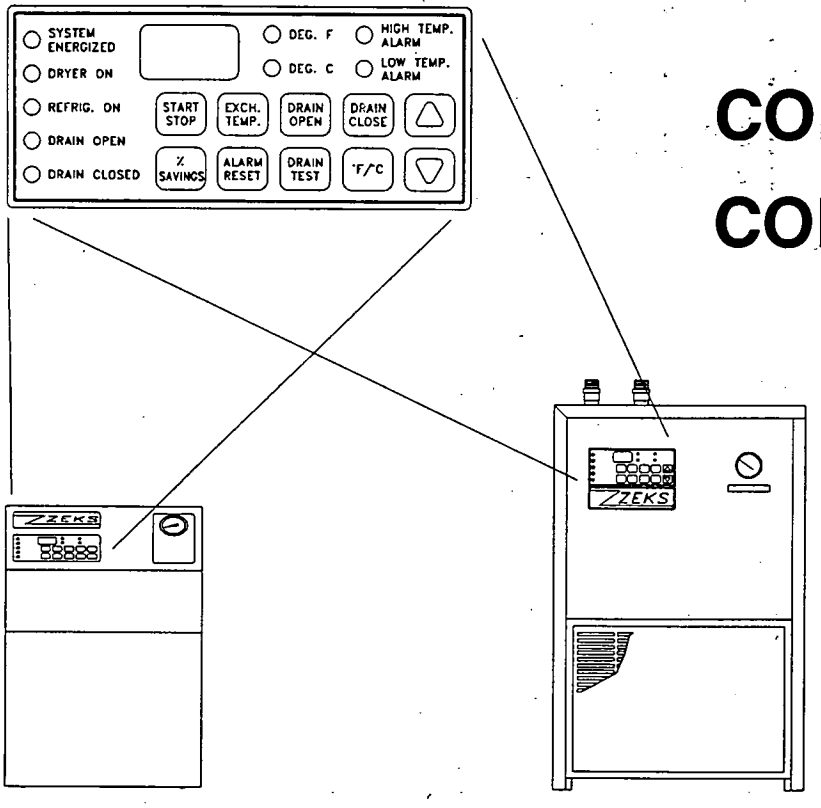

COMPUSTAT CONTROLLER

INTRODUCTION

The ZEKS compustat controller continuously monitors your dryers chiller temperature. The Compustats digital display allows the operator to monitor the dryer by a touch on the command board. Visual alarms alert undesireable conditions and the energy savings mode is able to provide real time savings on the ZEKS Heatsink cycling dryers.

ZEKS AIR DRIER CORPORATION
Malvern Industrial Park, Box 396
Malvern, Pennsylvania 19355
610-647-1600
(800) 888-2322
FAX 610-647-9199

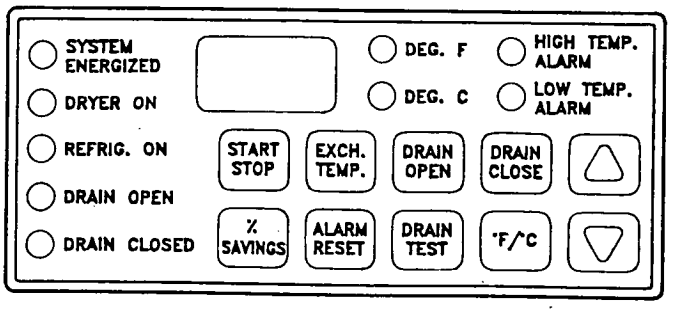

BUTTONS

- START/STOP
  Pressing this button will start or stop the unit. It toggles the unit between on and off.
- EXCH. TEMP
  Press this button to set the exchanger set point for the unit. On HeatSink units this controls the temperature at which the cycling of the refrigerant compressor cycles on and off. On Non-Cycle units this establishes the High Temp. Alarm point.
- DRAIN OPEN
  Press this button to set the length of time in seconds that the condensate drain will be open. This is adjustable from one (1) to thirty (30) seconds.
- DRAIN CLOSED
  Press this button to set the amount of time in minutes that the condensate drain will be closed. This is adjustable from one (1) to thirty (30) minutes.
- % SAVINGS
  Press this button to view the percent of time the compressor has been running while the unit was energized and the unit was in the DRYER ON condition. On Non-Cycle units, this will always be 0%.
- ALARM RESET
  Press this button to open the optional relay for the remote alarm. This does not correct the alarm condition which is indicated by the flashing alarm light.
- DRAIN TEST
  Press this button to open the drain to verify operation.
- °F/°C
  This key will select Fahrenheit or Celcius temperature scale for the display window. The appropriate light will indicate which scale is selected.

LIGHTS

- SYSTEM ENERGIZED
  Indicates when power is applied to unit.
- DRYER ON
  This will be on when the START/STOP switch has been pressed to place the unit in operation. The refrigerant system may start at any time when the light is on.
- REFRIG. ON
  This light comes on when the refrigeration compressor is operating.
- DRAIN OPEN
  This light comes on when power is applied to open the time solenoid drain.
- DRAIN CLOSED
  This light indicates that the drain should be closed because no power is being applied.
- DEG. F
  This is on when readings are in degrees fahrenheit.
- DEG. C
  This is on when readings are in degrees celsius.
- HIGH TEMP. ALARM
  When this light is on, it indicates that the exchanger temperature has risen to 12°F or 7°C above the exchanger temperature set point on HeatSink units.

  It indicates that the exchanger has exceeded the exchanger temperature setpoint on Non-cycling units.
- LOW TEMP. ALARM
  When the light is on, it indicates that the exchanger temperature has dropped below 29°F or −2°C. This condition stops the compressor and it will not restart until the temperature has risen two degrees above exchanger setpoint.

DISPLAY

The display is composed of two ¾" letters. These are used to display temperatures in the −9 to +99°F or +15 to 99°C range. Temperatures outside this range will be displayed as "EE". The display also informs you of fault or delay conditions.

- **PF** Indicates a probe failure. This is usually caused by a probe being unplugged, damage to the probe lead or defective probe.
- **CD** Indicates that the refrigerant compressor will not start until the end of a (3) three minute safety delay. The display of "cd" is immediately followed by the number of minutes left in the delay.
- **CH** Indicates that the refrigerant compressor has a crankcase heater. This heater must be energized for (8) eight hours prior to starting the unit. Therefore, there is a built in delay on units larger than 400 scfm from the time you energize the unit until the compressor will start.

OPERATION

The microprocessor control on Zeks HeatSink refrigerated dryer controls the refrigerant compressor to maintain a constant exchanger temperature and protect the equipment. This results in energy savings by cycling the refrigerant compressor off in response to the compressed air drying load while still maintaing the desired exiting dewpoint.

The mircroprocessor monitors the exchanger temperature for Zeks NonCycle dryers but does not cycle the compressor. Thus the energy savings feature will display 0%.

The controller also cycles the drain valve open for preset intervals to dispose of the water condensed from the compressed air.

The controller will display a visual alarm in the event the exchanger temperature becomes too high or too low. The alarm conditions can be signaled to a remote location through an optional alarm relay.

INITIAL STARTUP

1. Provide power to the unit. (check to be sure that the power matches the unit nameplate.)
2. Verify that the **System Energized** light is lit. If not have a qualified electrician to check the power supply.
3. Press the **Start/Stop** button. The **Dryer On** light should now be lit.
4. The unit will not start immediately due to the built in three minute compressor restart delay. This is indicated by a blinking of the **Refrig. On** light at one second intervals. Also, the display will show the exchanger temperature followed by "cd" indicating compressor delay followed by the remaining minutes of the delay.
5. At the end of the three minute delay, the refrigerant compressor will start if the exchanger temperature is at least 2° above the exchanger set point. On HeatSink cycling units the factory setting is 38°F. On Non-Cycling units this factory set point of 50° is the High Temp Alarm point.
6. All set points for Exchanger Temperature, Drain Open, Drain Closed and Alarm Trip Points have been factory set and do not require adjustment under normal circumstances. However, you may change these at any time even while the unit is running. The process is quite simple. Press the button of the item you wish to set ie. Exchanger Temperature. The corresponding "Refrig On" light will flash rapidly. Use the up and down arrow keys to adjust the set point shown on the display. Five seconds of no button activity will cause the unit to accept the new setting. The light will stop flashing.
7. Your dryer operation is completely automatic and requires no adjustments. On HeatSink cycling units the compressor will cycle based on exchanger temperature as it responds to system demand. You may wish to set the Automatic Drain by adjusting the Drain Open and Drain Close settings to match your systems requirements. Follow the same procedure as described below.

TROUBLESHOOTING

PROBLEM	SYMPTOM	POSSIBLE CAUSE	CORRECTIVE ACTION
Probe	"PF" on LED Display	Probe loose or off the connection	Inspect probe cable and plug in connection
		Defective probe terminals	Replace probe
	Erratic or inaccurate readings	Probe not completely in thermal well	Inspect probe and check readings against independent source (eg. temperature analyzer/pyrometer) both in exchanger well and to ambient.
		Defective probe	Replace probe
Overlay	Unit on but cannot access functions/setup	Overlay connecor loose or broken ribbon cable	Inspect ribbon and check the connection on the board
			Replace overlay
Control Board	High temperature reading but refrigeration system will not run	Probe problem	See "Probe" sympton above
		Board lockout	Disconnect power source and reinitiate start up procedures
		Compressor relay bad	Check for power from control board terminal
		Defective control board	Replace board

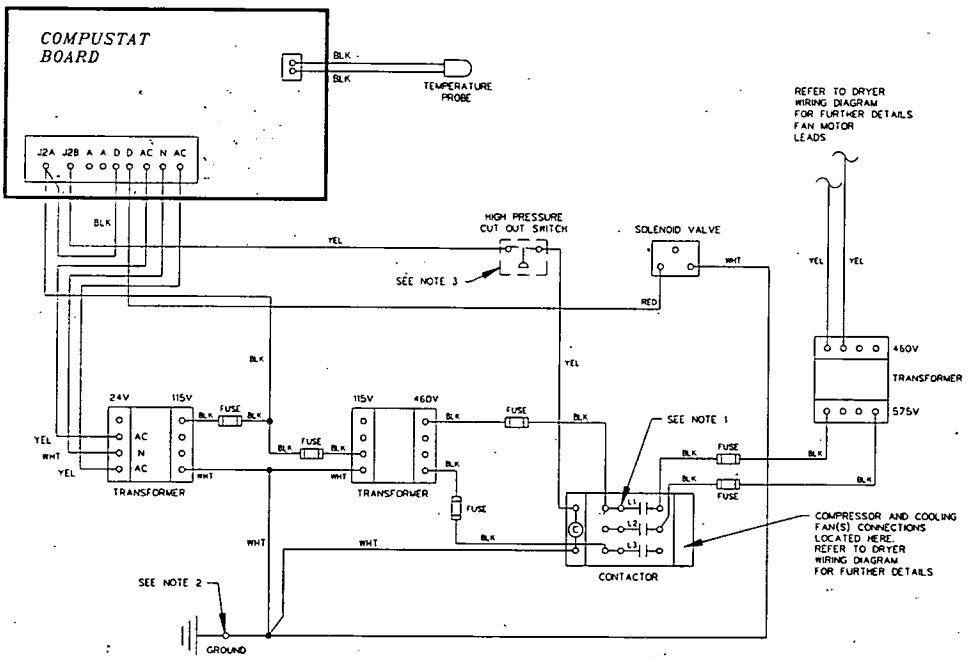

NOTES:

1. CUSTOMER POWER HOOK UP AT THE CONTACTOR ON L1, L2, L3.
2. CUSTOMER GROUND HOOK UP AT THE GROUND LUG.
3. - - - FOR WATER COOLED UNITS ONLY.

COMPUSTAT WIRING DIAGRAM

575/3/60 VOLT

FORM ADCOMP V0694 R

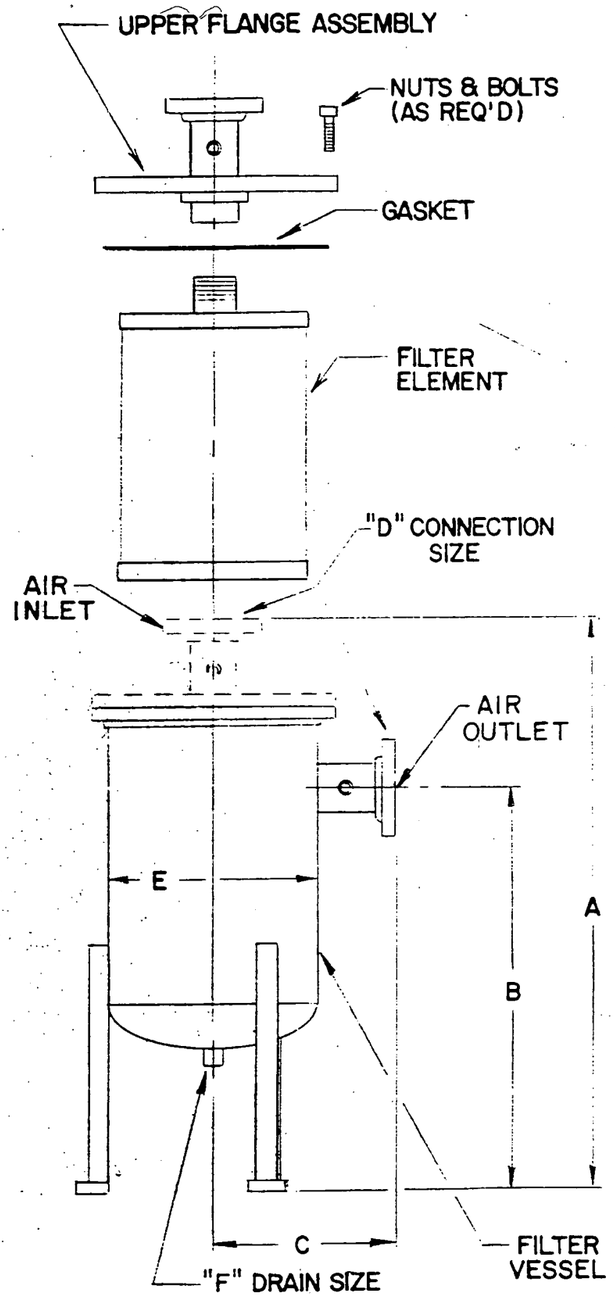

MODEL	A	B	C	D	E	F	ELM.	SHIPPING WT. (LBS) FLTR.	SHIPPING WT. (LBS) ELM.
125HDF	42.25	27.75	13	2" MPT	14	1" FPT	M125	200	20
250HDF	42.25	27.75	13	2" MPT	14	1" FPT	M250	200	20
500HDF	54.25	39.75	13	3" MPT	14	1" FPT	M500	220	35
1100HDF	72.37	56.87	14	3" MPT	16	1" FPT	M1100	350	60
1500HDF	72.50	56.87	15	4" FLG	18	1" FPT	M1500	390	80
1900HDF	75.75	58.75	18	4" FLG	24	1" FPT	M1900	680	90
2400HDF	75.75	58.75	18	4" FLG	24	1" FPT	M2400	700	120
3000HDF	88.75	71.75	18	4" FLG	24	1" FPT	M3000	730	150
4500HDF	153	135	18	6" FLG	24	1½" FLG	M4500	970	235
6000HDF	155	137	21	8" FLG	30	2" FLG	M6000	1100	400
8000HDF	181	162	21	8" FLG	30	2" FLG	M8000	1200	460

(ALL DIMENSIONS ARE IN INCHES)

WARNING: VESSELS MUST NOT BE SUBJECTED TO HIGHER PRESSURES AND TEMPERATURES THAN RATED. THE NAMEPLATE ON EACH FILTER VESSEL INDICATES THE MAXIMUM PRESSURE AND TEMPERATURE ALLOWED. ACCESSORIES MAY REDUCE THESE MAXIMUM VALUES. CHECK THE INDIVIDUAL ACCESSORY MAXIMUM VALUES. IF ACCESSORIES ARE INSTALLED AT THE FACTORY, THE NAMEPLATE WILL SHOW THE MAXIMUM RATINGS WITH THOSE ACCESSORIES INSTALLED.

HDF FILTER ELEMENT:
1) 99.98% EFFICIENT AT 0.1 MICRON RETENTION
2) FLOW PATH IS FROM INSIDE FILTER ELEMENT TO OUTSIDE
3) MAXIMUM WORKING TEMPERATURE: 300°F.
4) PRESSURE DROP 0.5 TO 1.0PSI AT RATED PERFORMANCE
5) REPLACE ELEMENT WHEN PRESSURE DROP IS 3PSI DIFFERENTIAL

INSTALLING OR CHANGING THE FILTER ELEMENT:

1) BEFORE STARTING ANY WORK ON THE FILTER, MAKE SURE THAT THE LINE IT IS CONNECTED TO IS COMPLETELY DEPRESSURIZED. A BYPASS LINE IS RECOMMENDED IF THE SYSTEM CANNOT BE SHUT DOWN.
2) AFTER DEPRESSURIZATION IS COMPLETE, REMOVE THE BOLTS THAT HOLD THE TOP FLANGE IN PLACE AND LIFT THE FLANGE OUT OF THE WAY. WARNING! THE ELEMENT IS DIRECTLY CONNECTED TO THIS FLANGE. CARE SHOULD BE TAKEN TO ENSURE NO DAMAGE TO THE ELEMENT.
3) UNSCREW OR UNBOLT THE OLD ELEMENT FROM THE TOP FLANGE AND REPLACE IT WITH THE NEW ELEMENT.
4) REINSTALL THE TOP FLANGE AND CHECK FOR LEAKS BEFORE BRINGING THE FILTER BACK ON LINE.

NOTES:
1) FILTER IS DESIGNED FOR AIR SERVICE ONLY. DO NOT ATTEMPT TO FILTER OTHER GASES OR AIR CONTAINING SUBSTANCES WHICH MIGHT DAMAGE THE ELEMENT, GASKETS, OR HOUSING.
2) DRAINS ARE OPTIONAL.

MAX. VESSEL DESIGN PRESSURE: 150PSIG (10.2 BARS)
MAX. VESSEL DESIGN TEMPERATURE: 300°F. (149°C)
NOTE: NORMAL WORKING TEMPERATURE IS 100°F. TO 150°F. ABOVE THIS LEVEL CONSULT FACTORY FOR DETAILS ON PERFORMANCE

DIMENSIONAL TOLERANCE UNLESS OTHERWISE SPECIFIED	
Castings & Weldments	±
Other Fractions	±
Decimal .XXX	±
Decimal .XX	±
Angularity	±

NOTE: DIMENSIONS AND DESIGN CRITERIA ARE SUBJECT TO CHANGE WITHOUT NOTICE.

NOTICE: THIS DRAWING EMBODIES A CONFIDENTIAL PROPRIETARY DESIGN OWNED BY PERMEA AND ALL PATENT RIGHTS AND DESIGN, MANUFACTURING THE SAME ARE EXPRESSLY RESERVED TO PERMEA. THIS DRAWING IS SUBMITTED UNDER A CONFIDENTIAL RELATIONSHIP FOR A SPECIFIED PERPOSE AND THE RECIPIENT HEREOF BY ACCEPTING THIS DRAWING ASSUMES CUSTODY THEREOF AND AGREES NOT TO DISCLOSE ANY INFORMATION REGARDING IT TO ANY UNAUTHORIZED PERSON, OR TO INCORPORATE THIS PROPRIETARY DESIGN OR THE SUBSTANCE OF IT EITHER IN WHOLE OR IN PART IN ANY EQUIPMENT, NOR USE IT FOR THE MANUFACTURE OF ANY PARTS.

ITEM	PART NO	REQ'D	DESCRIPTION

ZEKS AIR DRIER CORP.
MALVERN, PA.

SUBJECT: **HDF SERIES FILTERS**
INSTRUCTION SHEET

TOLERANCES: FRAC. DIMENSIONS ± 1/64 UNLESS OTHERWISE SPECIFIED

f. ROUGH MCH. FIN. | f. SMOOTH FIN. | f. GRIND OR LAP | f. POLISH

MATERIAL

DRAWN S.J. LEWIS | CHECKED CF.J | DRWG. & PART NO. 225974-C

DATE 1-12-89 | SCALE NONE

REQ'D. | NEXT ASSEM. | MODEL

ECO: 3066, 3243

143343