N60087.AR.000894
NAS BRUNSWICK
5090.3a

Bi-Annual Progress Report on Soil Vapor Extraction/Aquifer Air Sparging Remedial System Operations for the Period 1 January through 30 June 1999 Old Navy Fuel Farm, Naval Air Station, Brunswick, Maine

Contract No. N62472-92-D-1296
Contract Task Order No. 0035

U.S. NAVAL AIR STATION
BRUNSWICK, MAINE

Prepared for

Department of the Navy
Northern Division
Naval Facilities Engineering Command
10 Industrial Highway
Mail Stop No. 82
Lester, Pennsylvania 19113-2090

Prepared by

EA Engineering, Science, and Technology
The Maple Building
3 Washington Center
Newburgh, New York 12550

February 2000
FINAL
296.0035

Bi-Annual Progress Report on Soil Vapor Extraction/Aquifer Air Sparging Remedial System Operations for the Period 1 January through 30 June 1999 Old Navy Fuel Farm, Naval Air Station, Brunswick, Maine

Contract No. N62472-92-D-1296
Contract Task Order No. 0035

U.S. NAVAL AIR STATION
BRUNSWICK, MAINE

Prepared for

Department of the Navy
Northern Division
Naval Facilities Engineering Command
10 Industrial Highway
Mail Stop No. 82
Lester, Pennsylvania 19113-2090

Prepared by

EA Engineering, Science, and Technology
The Maple Building
3 Washington Center
Newburgh, New York 12550

February 2000
FINAL
296.0035

Bi-Annual Progress Report on Soil Vapor Extraction/Aquifer Air Sparging Remedial System Operations for the Period 1 January through 30 June 1999 Old Navy Fuel Farm, Naval Air Station, Brunswick, Maine

Contract No. N62472-92-D-1296
Contract Task Order No. 0035

Charles E. McLeod, Jr., P.E.
CTO Manager

2/22/2000
Date

Robert S. Pace
Acting Program Manager

2/22/00
Date

February 2000
FINAL
Project No. 296.0035

QUALITY REVIEW STATEMENT

Contract No. N62472-92-D-1296
Contract Task Order No. 0035
Activity: Naval Air Station, Brunswick, Maine

EA Project Number: 29600.35.7250

Description of Report/Deliverable:

Final Bi-Annual Progress Report on Soil Vapor Extraction/Aquifer Air Sparging Remedial System Operations for the Period 1 January through 30 June 1999, Old Navy Fuel Farm, Naval Air Station, Brunswick, Maine

EA CTO Manager: Charles E. McLeod, Jr., P.E.

In compliance with EA's Quality Procedures for review of deliverables outlined in the Quality Management Plan, and as per State of Maine Law, this final deliverable has been reviewed for quality by the undersigned Senior Technical Reviewer and reviewed for its technical content by the undersigned State of Maine Certified Professional. The information presented in this report/deliverable has been prepared in accordance with the approved Implementation Plan for the Contract Task Order (CTO) and reflects a proper presentation of the data and/or the conclusions drawn and/or the analyses or design completed during the conduct of the work. This statement is based upon the standards identified in the CTO and/or the standard of care existing at the time of preparation.

Senior Technical Reviewer(s)

2/22/2000

Richard W. Waterman
Senior Technical Reviewer

(Date)

STATE OF MAINE
PAUL W. HIGGINS
No. 350
CERTIFIED GEOLOGIST

2-23-00

Paul W. Higgins, C.G.
State of Maine Certified Geologist (No. 350)

(Date)

Bi-Annual Progress Report on Soil Vapor Extraction/Aquifer Air Sparging Remedial System Operations for the Period 1 January through 30 June 1999 Old Navy Fuel Farm, Naval Air Station, Brunswick, Maine

Contract No. N62472-92-D-1296
Contract Task Order No. 0035

Charles E. McLeod, Jr., P.E.
CTO Manager

2/22/2000
Date

Robert S. Pace
Acting Program Manager

2/22/00
Date

February 2000
FINAL
Project No. 296.0035

QUALITY REVIEW STATEMENT

Contract No. N62472-92-D-1296
Contract Task Order No. 0035
Activity: Naval Air Station, Brunswick, Maine

EA Project Number: 29600.35.7250

Description of Report/Deliverable:

Final Bi-Annual Progress Report on Soil Vapor Extraction/Aquifer Air Sparging Remedial System Operations for the Period 1 January through 30 June 1999, Old Navy Fuel Farm, Naval Air Station, Brunswick, Maine

EA CTO Manager: Charles E. McLeod, Jr., P.E.

In compliance with EA's Quality Procedures for review of deliverables outlined in the Quality Management Plan, and as per State of Maine Law, this final deliverable has been reviewed for quality by the undersigned Senior Technical Reviewer and reviewed for its technical content by the undersigned State of Maine Certified Professional. The information presented in this report/deliverable has been prepared in accordance with the approved Implementation Plan for the Contract Task Order (CTO) and reflects a proper presentation of the data and/or the conclusions drawn and/or the analyses or design completed during the conduct of the work. This statement is based upon the standards identified in the CTO and/or the standard of care existing at the time of preparation.

Senior Technical Reviewer(s)

2/22/2000

Richard W. Waterman
Senior Technical Reviewer

(Date)

STATE OF MAINE
PAUL W. HIGGINS
No. 350
CERTIFIED GEOLOGIST

2-23-00

Paul W. Higgins, C.G.
State of Maine Certified Geologist (No. 350)

(Date)

CONTENTS

Page

LIST OF FIGURES

1. SOIL VAPOR EXTRACTION/AQUIFER AIR SPARGING OPERATIONS SUMMARY 1

   1.1 De-Watering Pilot and Full-Scale Study 1
   1.2 Soil Vapor Extraction/Aquifer Air Sparging System Expansion 1

2. MONITORING AND SAMPLING PROCEDURES AND RESULTS 2

   2.1 Well Gauging and Water Quality Monitoring Program 2
   2.2 Well Point Air Quality Monitoring Program 3
   2.3 Ground-Water Sampling Program 4
   2.4 Soil Vapor Extraction System Process Water Sampling 6

3. ASSESSMENT OF SYSTEM PERFORMANCE 6

4. CONCLUSIONS AND RECOMMENDATIONS 7

APPENDIX A: SUMMARY TABLES
APPENDIX B: FIELD RECORD OF WATER QUALITY ANALYSIS FORMS
APPENDIX C: FIELD RECORD OF AIR SPARGING WELL POINT MONITORING FORMS
APPENDIX D: FIELD RECORD OF WELL GAUGING, PURGING, AND SAMPLING FORMS
APPENDIX E: LABORATORY REPORT, CHEMICAL ANALYSIS OF GROUND WATER
APPENDIX F: MOISTURE SEPARATION TANK ANALYTICAL RESULTS
APPENDIX G: WATER LEVEL GAUGING DATA
APPENDIX H: VAPOR SAMPLE ANALYTICAL DATA
APPENDIX I: FIELD RECORD OF AIR SPARGING SYSTEM OPERATIONS FORMS

LIST OF FIGURES

Number	Title
1	Air sparging injection well and soil vapor extraction line layouts, Old Navy Fuel Farm, Naval Air Station, Brunswick, Maine.
2	General soil vapor extraction and air sparging system schematic, Old Navy Fuel Farm, Naval Air Station, Brunswick, Maine.
3	Process flow and instrumentation diagram, Old Navy Fuel Farm, Naval Air Station, Brunswick, Maine.
4	Shallow well points and ground-water monitoring well locations, Old Navy Fuel Farm, Naval Air Station, Brunswick, Maine.
5	Interpreted ground-water elevation contour map based on data collected 28 June 1999, Old Navy Fuel Farm, Naval Air Station, Brunswick, Maine.
6	Interpreted dissolved-phase BTEX concentration isopleth map, ground-water samples collected 15-18 June 1999, Old Navy Fuel Farm, Naval Air Station, Brunswick, Maine.
7	Interpreted dissolved-phase TPH-GRO concentration isopleth map, ground-water samples collected 15-18 June 1999, Old Navy Fuel Farm, Naval Air Station, Brunswick, Maine.
8	Interpreted dissolved-phase TPH-DRO concentration isopleth map, ground-water samples collected 15-18 June 1999, Old Navy Fuel Farm, Naval Air Station, Brunswick, Maine.
9	Soil vapor extraction/aquifer air sparging treatment system intake.
10	Soil vapor extraction/aquifer air sparging treatment system emissions.

1. SOIL VAPOR EXTRACTION/AQUIFER AIR SPARGING OPERATIONS SUMMARY

The primary purpose of the remediation system is to reduce volatile organic compound (VOC) concentrations in site soil and ground water. To accomplish the stated objective, a network of soil vapor extraction (SVE) lateral trenches was constructed to remove soil vapor from the unsaturated zone, and an aquifer air sparging (AAS) system incorporating air sparge wells was designed and installed to deliver ambient air to the site ground water (Figure 1). Associated air delivery and vapor extraction return pipes are directed to a single treatment building housing the SVE and AAS mechanical and control equipment. A generic schematic of the SVE/AAS process is shown on Figure 2. However, due to the shallow depth of ground water at the referenced site, normal SVE/AAS activities could not be accomplished. Therefore, the system was modified to accommodate biosparging to promote degradation of the VOC through biological activity. This activity was performed through December 1998. Modifications to the system, including dual-phase extraction and separation, were performed to allow normal SVE/AAS operations. The SVE system, along with carbon adsorption off-gas treatment, was activated.

1.1 DE-WATERING PILOT AND FULL-SCALE STUDY

In order to effectively utilize the SVE system, a de-watering pilot study was conceived to de-water the subsurface surrounding the SVE process piping in an effort to allow capture of the VOC released during sparging efforts as per the original design. A 2,000-gal moisture separation tank is buried to the north of the existing treatment building. The three existing SVE blowers and the SVE lines from the collection system are connected to the flanges at the top of the tank. When the SVE blowers are started, vacuum conditions are applied to the tank and the collection system. The water in the SVE laterals and the surrounding gravel pack is pulled through the lines and dropped out into the 2,000-gal moisture separation tank. De-watering of the SVE lines and surrounding formation must be performed prior to vapor collection. Collected vapor is processed through a 5,000-lb carbon vessel located outside the treatment building to reduce VOC emissions as required. The extracted ground water is pumped out of the moisture separation tank, discharged into the sanitary sewer, and directed to the treatment facility operated by the Brunswick Sewer District. A process flow and instrumentation diagram is shown on Figure 3. Installation of the system was completed by the end of February 1999, and the SVE blowers were activated in March 1999. The prove-out period for the system was conducted in March and April 1999.

It was demonstrated that the de-watering pilot study achieves the intended purpose of depressing the ground-water table to operate the SVE/AAS system as designed. Modifications were made to the existing system for full-scale operation and the system is currently active.

1.2 SOIL VAPOR EXTRACTION/AQUIFER AIR SPARGING SYSTEM EXPANSION

Six additional sparge points were installed in October 1998 to expand the remedial system to the north of the western portion of the system (Figure 1). This is an area of elevated benzene,

toluene, ethylbenzene, and total xylenes (BTEX); total petroleum hydrocarbon (TPH) diesel range organics (DRO); and TPH gasoline range organics (GRO) that was not actively remediated by the existing SVE/AAS system. Each point was drilled to a depth of 10-15 ft with the screened interval penetrating 4-8 ft into the saturated zone. Two additional SVE lines were installed to collect the VOC vapors generated by the additional sparge wells. The piping to connect the air sparge points and the additional SVE lines to the existing SVE/AAS system was installed in Spring 1999.

2. MONITORING AND SAMPLING PROCEDURES AND RESULTS

In addition to the SVE and AAS systems, a total of 21 shallow well points and 11 ground-water monitoring wells exist in the general vicinity of the system (Figure 4). These points are used to determine ground-water quality and evaluate system performance.

2.1 WELL GAUGING AND WATER QUALITY MONITORING PROGRAM

Well gauging and water quality indicator parameter data were collected during each of 12 site operations and monitoring visits during the 1 January – 30 June 1999 operational period. Field personnel gauged 11 monitoring wells and 19 well points located within the vicinity of the Old Navy Fuel Farm to determine depth to ground water and absence/presence of light, non-aqueous phase liquid. Immediately following well gauging, water quality indicator parameter data were recorded at these locations. Monitoring well and well point locations are shown on Figure 4.

A summary of the well gauging data for the 6-month reporting period is provided in Appendix Table A-1. Review of the gauging data indicates that the water table exhibited a slight decrease in elevation during the period of January-June 1999. Some larger isolated decreases in water table elevations are due to SVE operations. The remaining decreases are probably due to seasonal ground-water fluctuations. Light, non-aqueous phase liquid was not detected in any monitoring well or well point during the reporting period.

Field measurements of water quality indicator parameters were obtained from January through June 1999 to assess the variation in water quality among well points and monitoring wells. Indicator parameters, including temperature, pH, conductivity, dissolved oxygen, and redox, were measured *in situ* using a Yellow Springs Instrument Model 600D multiparameter water quality meter. The manufacturer-recommended instrument calibration procedures were conducted prior to the start of each day's field effort and after potentially erroneous readings. Field measurements were then obtained by immersing the instrument sonde below the water level at each test location. *In situ* water quality indicator parameter data were recorded on the Field Record of Water Quality Analysis forms provided in Appendix B.

As suggested by the Maine Department of Environmental Protection, *in situ* measurements of water quality indicator parameters without prior well purging may not provide data fully representative of actual field conditions (particularly dissolved oxygen and redox) due to the

potential for ground-water equilibration with air within the riser headspace. It should be noted that purging at the well points was impractical due to extremely low recharge rates. Thus, *in situ* water quality parameter data were collected with procedural consistency at well points and monitoring wells, while recognizing a potential for reduction in representativeness.

As previously noted, water quality indicator parameter measurements may not be entirely representative of ground-water conditions since the well points and monitoring wells were not purged prior to data collection. Since the dissolved oxygen and redox measurements are especially sensitive to equilibration with the well point riser headspace, these parameters are not evaluated further. A summary of water quality indicator parameter data (excluding dissolved oxygen and redox measurements) collected during the operation and maintenance visits is provided in Appendix Table A-2.

To improve water quality parameter representativeness and usability, the 21 well points will be removed from service and replaced by 6 additional monitoring wells. Installation of the monitoring wells is scheduled to be performed during the July-December 1999 operational period. Subsequently, the 17 monitoring wells will be the data collection points for monitoring the ground-water plume, and to provide more accurate water quality indicator parameter measurement. The collection frequency will be modified during the next period to a monthly frequency, and will include dissolved oxygen, pH, and temperature via low flow sampling techniques.

2.2 WELL POINT AIR QUALITY MONITORING PROGRAM

From January through June 1999, bi-monthly field monitoring was performed at 19 well points and SVE intake and emission locations for total volatile hydrocarbons (TVH) using a Foxboro TVA-1000 photoionization detector/flame ionization detector (PID/FID) and for methane, oxygen, and carbon dioxide concentrations using a LandTec Model GA-90 analyzer. TVH concentrations were measured to assess the potential effects of active sparging on partitioning/volatilization of hydrocarbons from ground water to the well point headspace. Increases in TVH concentration in well point riser headspace may be interpreted as excessive aeration of the saturated zone and may further indicate persistent conditions of elevated hydrocarbon concentrations. The presence of methane and/or depleted oxygen conditions within the well point riser headspace may be indicative of anaerobic locations requiring increased sparging rates. Elevated carbon dioxide measurements may indicate increased microbial activity. Data were recorded on the Field Record of Air Sparging Well Point Monitoring forms provided in Appendix C.

Well point headspace vapor measurements were conducted on 30 January, 25 February, 15 April, 28 May, and 14 June 1999. The PID data collected on 30 January 1999 were not retained for analysis due to equipment failure. No data were collected on 24 March 1999 due to rain. The presence of methane and/or depleted oxygen conditions within the well point riser headspace may be indicative of anaerobic locations requiring increased sparging rates. Therefore, elevated FID responses observed without corresponding PID responses were assumed to be indicative of the presence of aliphatic hydrocarbons (i.e., methane-based compounds). These instrument

responses were correlated against actual methane measurements performed with the LandTec GA-90 methane detector. During the reporting period, TVH concentrations greater than 10 ppm_v (PID) were observed in 8 of the 19 well point risers. A summary of the well point headspace TVH measurements is provided in Appendix Table A-3.

During the January-June 1999 reporting period, methane was not detected throughout the sparging remedial area, except for the June monitoring event. Percent methane measurements ranged from 0.1 to 0.2 percent on 14 June 1999. Percent carbon dioxide measurements ranged from non-detect to 0.2 percent. Percent oxygen measurements were at ambient concentrations (i.e., approximately 21 percent) at all locations. Well point riser headspace methane, carbon dioxide, and oxygen data for the reporting period are summarized in Appendix Table A-4.

2.3 GROUND-WATER SAMPLING PROGRAM

The effectiveness of the air sparging system is assessed through verification of long-term reduction in dissolved-phase hydrocarbon concentrations in site ground water.

The fifth interim ground-water sampling event was conducted on 15-18 June 1999 at 10 of 19 well points, and 9 ground-water monitoring wells located within the remediation zone. The 10 well points sampled during the ground-water sampling program included: WP-1 through WP-3, WP-6, WP-7, WP-10, WP-16R, WP-17R, WP-21, and WP-22. Well points WP-13, WP-19, and WP-20 were destroyed during Naval Air Station, Brunswick base activities in early December 1998, and were unavailable for the ground-water sampling event. The remaining well points were not sampled due to insufficient water volume. The monitoring wells included in the ground-water sampling event were: MW-NASB-044, MW-NASB-046, MW-NASB-049, MW-NASB-051, MW-NASB-054, MW-NASB-058, MW-NASB-061R, MW-NASB-062, and MW-NASB-213. An insufficient volume of ground water was available for sampling at monitoring wells MW-NASB-043 and MW-NASB-211. Monitoring well MW-NASB-056R was obstructed during this reporting period and could not be sampled. Sampling methodologies performed in the field are discussed below.

A complete round of well gauging and measurement of water quality indicator parameters was performed on 14 June 1999 to determine the absence/presence of light, non-aqueous phase liquid; depth to ground water; and depth to bottom using a Solinst Model 121 interface meter graduated at 0.01-ft intervals. Following the gauging event, monitoring wells and well points were sampled. Monitoring wells were sampled using "low flow" techniques consistent with those employed during the base-wide Long-Term Monitoring Program. The standard operating procedures performed for this program were based on draft guidance prepared by the U.S. Environmental Protection Agency, Region I (1994[1]) which is in conformance with the procedures described in the Long-Term Monitoring Plan (ABB-ES 1994[2]). This procedure

1. U.S. Environmental Protection Agency (U.S. EPA). 1994. National Primary Drinking Water Standards. Office of Water, Washington, D.C. EPA 610-P-94-001. February.

2. ABB Environmental Services, Inc. (ABB-ES). 1994. Final Long-Term Monitoring Plan for Building 95, Sites 1 and 3 and Eastern Plume, Naval Air Station, Brunswick, Maine. August.

incorporates the use of variable-speed submersible pumps (Grundfos Rediflo for monitoring wells) or a peristaltic pump (ISCO Model 2700 for well points) and clean, dedicated polyethylene discharge tubing. Following the gauging task, well purging was initiated at a low flow pumping rate. As low flow purging proceeded, water quality indicator parameters, flow rate, and drawdown were monitored and recorded at 3- to 5-minute intervals until water quality parameter stabilization was achieved.

Well points were purged using new, dedicated polyethylene tubing and an ISCO Model 2700 peristaltic pump with dedicated Masterflex Silicone C-Flex® tubing. The pumping system was operated until all well points were purged dry. The well points were then allowed to recharge and were sampled within 24 hours of purging. Well point ground-water sampling was performed using the ISCO peristaltic pump and polyethylene tubing as described for well point purging operations. Due to the very limited yield/recharge exhibited in many of the well points, low flow techniques are not used.

Well gauging confirmed the absence of measurable light, non-aqueous phase liquid at all locations. The ground-water elevation in the monitoring wells ranged from 60.1 ft mean sea level in MW-NASB-049 to 74.4 ft mean sea level in MW-NASB-062. Monitoring well MW-NASB-043 was observed to be dry during most of the period. Appendix Table A-5 provides a summary of Old Navy Fuel Farm gauging and water quality data collected on 14 June 1999 before sampling. The Field Record of Well Gauging, Purging, and Sampling forms completed during the sampling event are provided in Appendix D.

Figure 5 provides the interpreted water table elevations for the 28 June 1999 gauging event. Ground-water flow is interpreted to be to the south-southeast. The overall ground-water flow direction observed during the 28 June 1999 gauging event, when the AAS/SVE system was active, was similar to that observed during the August 1996 gauging event (prior to system activation) and during subsequent periods of active sparging.

Ground-water samples for 10 of 19 well points were analyzed onsite on 18 June 1999 for ferrous iron and manganese using a Hach Model DR-2000 spectrometer. All iron samples were diluted 100 times. The results are summarized in Appendix Table A-6. Future sampling events will not include iron and manganese testing since active AAS/SVE operations are ongoing and monitoring of biological activity is not a primary concern.

Samples from the monitoring wells and well points were shipped to Katahdin Analytical Services and analyzed for BTEX plus methyl tertiary-butyl ether by U.S. Environmental Protection Agency Method 602, TPH-GRO by Maine Department of Human Services Health and Environmental Testing Laboratory Method 4.2.17, and TPH-DRO by Maine Department of Human Services Health and Environmental Testing Laboratory Method 4.1.25. Analytical results for the 15-18 June 1999 ground-water sampling event are summarized in Appendix Table A-7 with laboratory results provided in Appendix E. Figures 6 through 8 provide interpreted concentration isopleths for total BTEX, TPH-GRO, and TPH-DRO, respectively.

A summary of analytical results for ground-water samples collected at the Old Navy Fuel Farm during the period of 10 June 1996 – 18 June 1999 is provided in Appendix Table A-8. To provide a comparison to historical analytical data for dissolved-phase BTEX, total BTEX calculations for the well point and monitoring well samples collected during 15-18 June 1999 included all data as reported, regardless of the laboratory reported trip blank and/or rinsate blank detections.

2.4 SOIL VAPOR EXTRACTION SYSTEM PROCESS WATER SAMPLING

Process water samples were collected monthly (starting in March 1999) from the sampling port in the metering vault located northwest of the moisture separation tank. The data collected from the monthly grab samples include the effluent flow rate and laboratory analyses necessary to determine the quality of water discharged to the Brunswick Sewer District. The samples were analyzed for BTEX, TPH-GRO, and TPH-DRO using the following methods: U.S. Environmental Protection Agency Method 602, Maine Department of Human Services Health and Environmental Testing Laboratory Method 4.2.17, and Maine Department of Human Services Health and Environmental Testing Laboratory Method 4.2.25, respectively. Analytical results for the monthly sampling events are summarized in Appendix Table A-9 with laboratory results in Appendix F. Flow and water quality data from monitoring of collection tank effluent, as well as monitoring and sampling parameters, are included in the monthly ground-water extraction and treatment system reports to Brunswick Sewer District. No discharge violations were recorded during this report period. A criteria of 100 mg/L of total TPH-DRO and TPH-GRO was established by the Brunswick Sewer District.

3. ASSESSMENT OF SYSTEM PERFORMANCE

The SVE system was activated on 9 March 1999 with one blower. In order to optimize the air sparging efforts, the subsurface surrounding the SVE process piping was allowed to de-water for approximately 34 days during which time a second SVE blower was brought on-line to increase system vacuum. Water level gauging data of monitoring wells and well points are provided as Appendix G. Significant PID readings were not observed while operating the SVE blowers alone. Therefore, after dewatering 222,200 gal of water from the SVE lines, trenches, and surrounding formation, a single air sparge blower was brought on-line on 12 April 1999. Aqueous samples were collected from the moisture separation tank sampling port on a monthly basis and analyzed for BTEX, TPH-DRO, and TPH-GRO to ensure that discharge levels to the sanitary sewer did not exceed base-wide permitted levels for these constituents. A summary of the analytical data is included as Appendix F. The pressure and flow rate from the single AAS blower was increased on 23 April 1999 with a corresponding increase in TVH influent concentration from 9.5 ppm to a maximum of 17 ppm on 11 May 1999. During May 1999, the western portion of the SVE/AAS system was expanded into an area that had exhibited elevated dissolved-phase concentrations of BTEX, TPH-DRO, and TPH-GRO. The SVE expansion was brought on-line on 28 May 1999, and the new AAS wells were activated on 3 June 1999. An increase in TVH capture was initially observed which returned to previous levels 5 days later. However, significant TVH influent concentrations were observed following activation of a

second AAS blower on 8 June 1999. On 13 June 1999, vapor samples were collected of the influent and analyzed for BTEX and molecular weight to refine emissions calculations. A summary of the analytical data is included as Appendix H. On 16 June 1999, a 5,000-lb vapor-phase carbon vessel was added to the system to reduce emissions. However, by 16 July 1999, the system was shut down due to saturation of the carbon.

As part of the operations and maintenance of the SVE system, PID readings were collected at the emission stack to characterize system performance and ensure emissions that remained below permitted levels. These data are summarized in Appendix Table A-10. For calculation of the daily TVH removal rate, it was assumed that the total SVE system flow rate (two blowers operating) of 1,500 scfm remained constant (600 scfm from SVE laterals, 900 scfm from dilution air). SVE field data collected at the stack and the intake of the SVE blowers prior to the addition of dilution air are provided in Appendix I. The intake and emissions calculation is as follows:

$$\text{Intake/emissions rate (lb/day)} = (\text{stack flow rate}) \times (\text{stack PID reading in ppm}) \times (\text{molecular weight}) \times (\text{conversion factor}) \times (24 \text{ hours})$$

The installation of 4-in. flowmeters and the collection of vapor samples to obtain more accurate flow rates and molecular weight enabled the refining of the emission rate calculation.

Figure 9 presents daily and cumulative TVH intake rates based on historical treatment system performance; Figure 10 presents daily and cumulative TVH emission rates. Notable operational milestones, including system additions/enhancements, operational interruptions, and unusually high TVH recovery intervals, are included on the figures.

Analytical data collected during the August 1996 (baseline), December 1996, June and December 1997, June and December 1998, and June 1999 ground-water sampling events at the Old Navy Fuel Farm indicate that progressive reductions in both the spatial distribution and localized concentrations of dissolved-phase BTEX, methyl tertiary-butyl ether, TPH-GRO, and TPH-DRO have occurred since activation of the remedial system. Appendix Table A-8 provides a historical summary of analytical results for these sampling events. Concentration isopleths for the 15-18 June 1999 sampling event are provided on Figures 6 through 8.

Analysis of historical data trends indicate that for the 5 ground-water sampling events performed since system activation, the overall area affected by dissolved-phase hydrocarbons has been steadily decreasing.

4. CONCLUSIONS AND RECOMMENDATIONS

Although reductions in the extent and concentrations of dissolved-phase hydrocarbons have been demonstrated since the commencement of remedial activities in August 1996, in an effort to increase the TVH removal rates, system modifications were completed during this report period to increase the rate of reduction in the dissolved phase plume.

As noted in the section above, a significant increase in the intake rate of hydrocarbons was noted after the system was modified. This increase was greater than anticipated and has led to an increase in carbon consumption. Based upon the new intake rate, the activated carbon vessel will not provide adequate removal of petroleum hydrocarbons from the off-gas. Breakthrough of the vessel occurred after approximately 1 month. Based upon observations during system expansion (visual observation of petroleum-contaminated soils), and the increased intake rate of petroleum hydrocarbons, it is recommended to perform a direct-push investigation to delineate the extent of source soil. Delineation will provide the necessary information to determine if additional removal actions must be taken to achieve the desired closure date. After delineation has occurred, alternate remedial technologies to address fuel-saturated soil and dissolved-phase ground-water contamination will be evaluated for cost effectiveness, implementability, and technical merit.

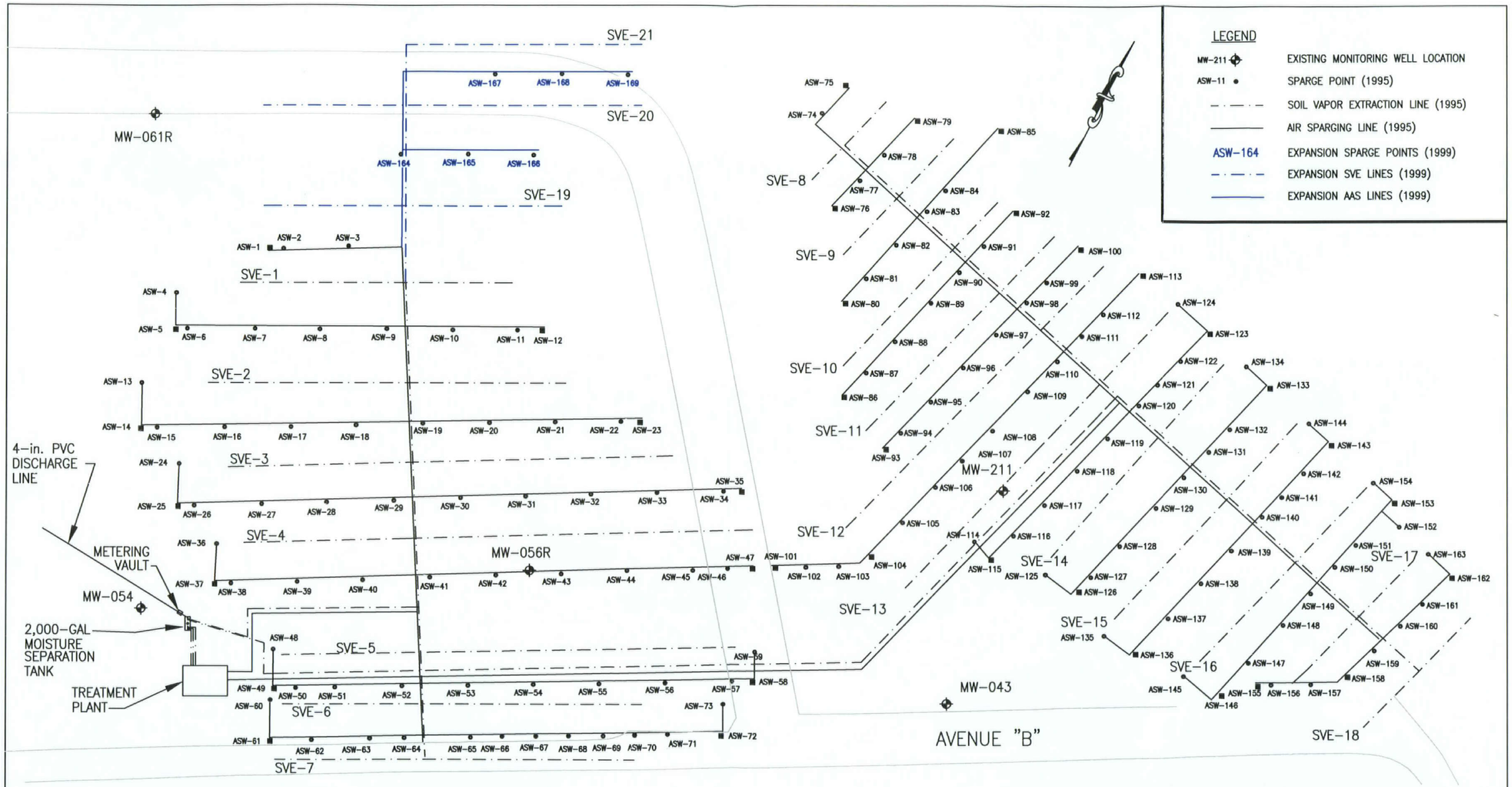

ADAPTED FROM PRELIMINARY OPERATIONS AND MAINTENANCE PLAN (OHM 1995)

DWG. FILE No. F:\FEDERAL\DOD\NAVY\2960035\CAD\FFO&M\JANJUN99\FIG1.DWG

AIR SPARGING INJECTION WELL AND SOIL VAPOR EXTRACTION LINE LAYOUTS
OLD NAVY FUEL FARM, NAS BRUNSWICK, MAINE

FIGURE 1

DESIGN	CEM
DRAWN	BT
CHECKED	DSS
PROJECT MANAGER	JAC

EA ENGINEERING, SCIENCE, AND TECHNOLOGY, INC.
BALTIMORE CHICAGO LINCOLN NEW YORK NEW JERSEY ATLANTA DALLAS LOS ANGELES SAN FRANCISCO
3 WASHINGTON CENTER NEWBURGH, NEW YORK 12550 (914) 565-6100

DATE	18 JANUARY 2000
SCALE	AS SHOWN
PROJECT NO.	29600.35
FILE NAME:	FIG1.DWG

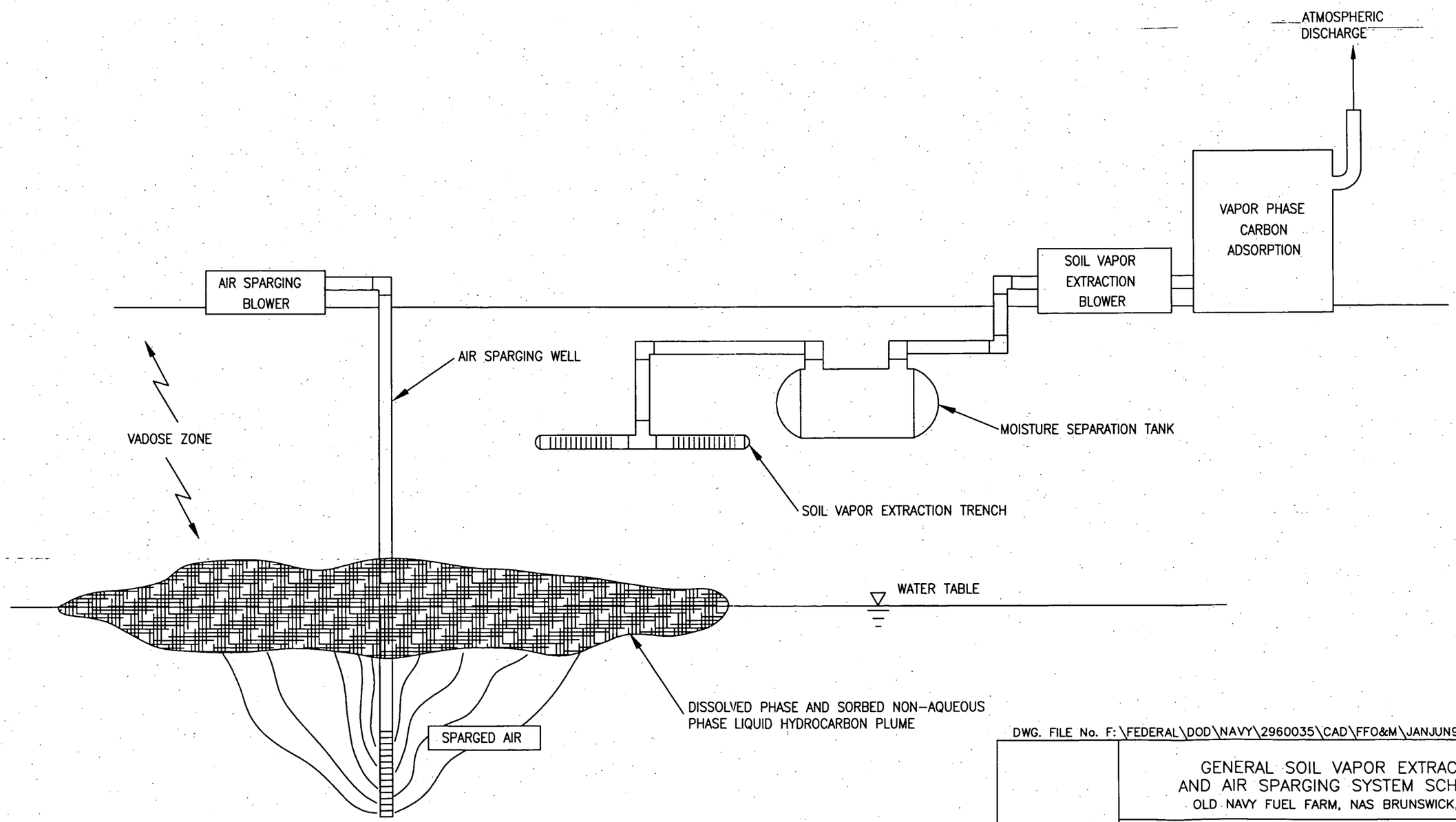

DWG. FILE No. F:\FEDERAL\DOD\NAVY\2960035\CAD\FFO&M\JANJUN99\FIG2.DWG

GENERAL SOIL VAPOR EXTRACTION AND AIR SPARGING SYSTEM SCHEMATIC
OLD NAVY FUEL FARM, NAS BRUNSWICK, MAINE

FIGURE 2

DESIGN: CEM	EA ENGINEERING, SCIENCE, AND TECHNOLOGY, INC.	DATE: 11 AUGUST 1999
DRAWN: SAP	BALTIMORE, CHICAGO, LINCOLN, NEW YORK, NEW JERSEY, ATLANTA, DALLAS, LOS ANGELES, SAN FRANCISCO	SCALE: AS SHOWN
CHECKED: DSS	3 WASHINGTON CENTER, NEWBURGH, NEW YORK 12550, (914) 565-8100	PROJECT NO.: 29600.35
PROJECT MANAGER: JAC		FILE NAME: FIG2.DWG

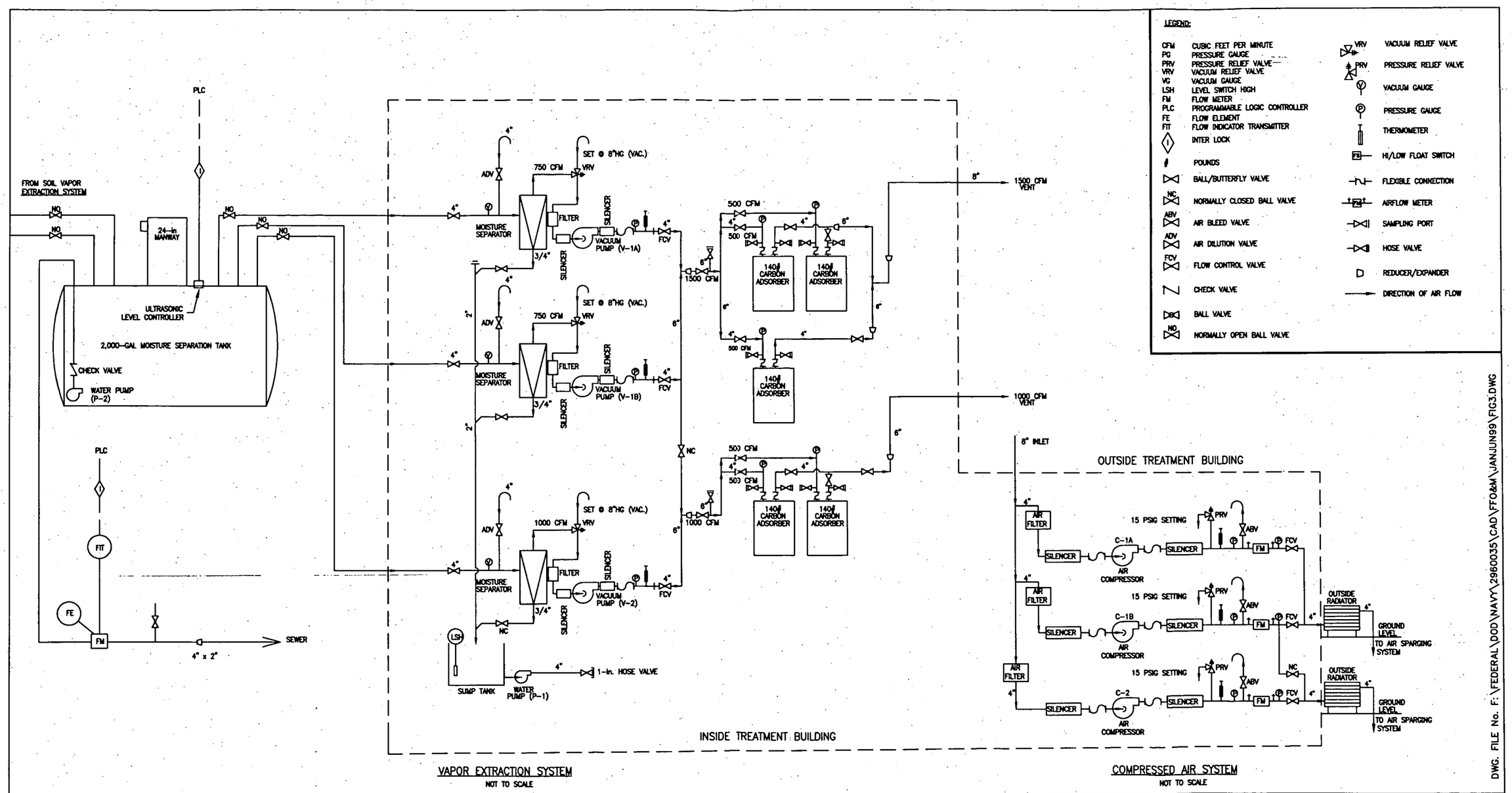

NOTES:

1. DIAGRAMS/SCHEMATICS NOT TO SCALE.
2. DIAGRAMMATIC LAYOUT MAY NOT REPRESENT ACTUAL PIPING ARRANGEMENTS.
3. COMPRESSOR AND VACUUM FLOW RATES SHOWN ARE MAXIMUM REQUIRED RATES OF THE EQUIPMENT.
4. DEVELOPED FROM FIGURE 2-3 PROCESS FLOW AND INSTRUMENTATION DIAGRAM BY OHM REMEDIATION SERVICES CORP. DATED 11/7/95 (DRAWING NO. 16261-D13).
5. ADAPTED FROM PRELIMINARY OPERATIONS AND MAINTENANCE PLAN (OHM 1995)

PROCESS FLOW
AND INSTRUMENTATION DIAGRAM
OLD NAVY FUEL FARM, NAS BRUNSWICK, MAINE

FIGURE 3

DESIGN	CEM
DRAWN	SAP
CHECKED	DSS
PROJECT MANAGER	JAC

EA ENGINEERING, SCIENCE, AND TECHNOLOGY, INC.
BALTIMORE CHICAGO LINCOLN NEW YORK NEW JERSEY ATLANTA DALLAS LOS ANGELES SAN FRANCISCO
3 WASHINGTON CENTER
NEWBURGH, NEW YORK 12550
(914) 565-8100

DATE	11 AUGUST 1999
SCALE	AS SHOWN
PROJECT NO.	29600.35
FILE NAME:	FIG3.DWG

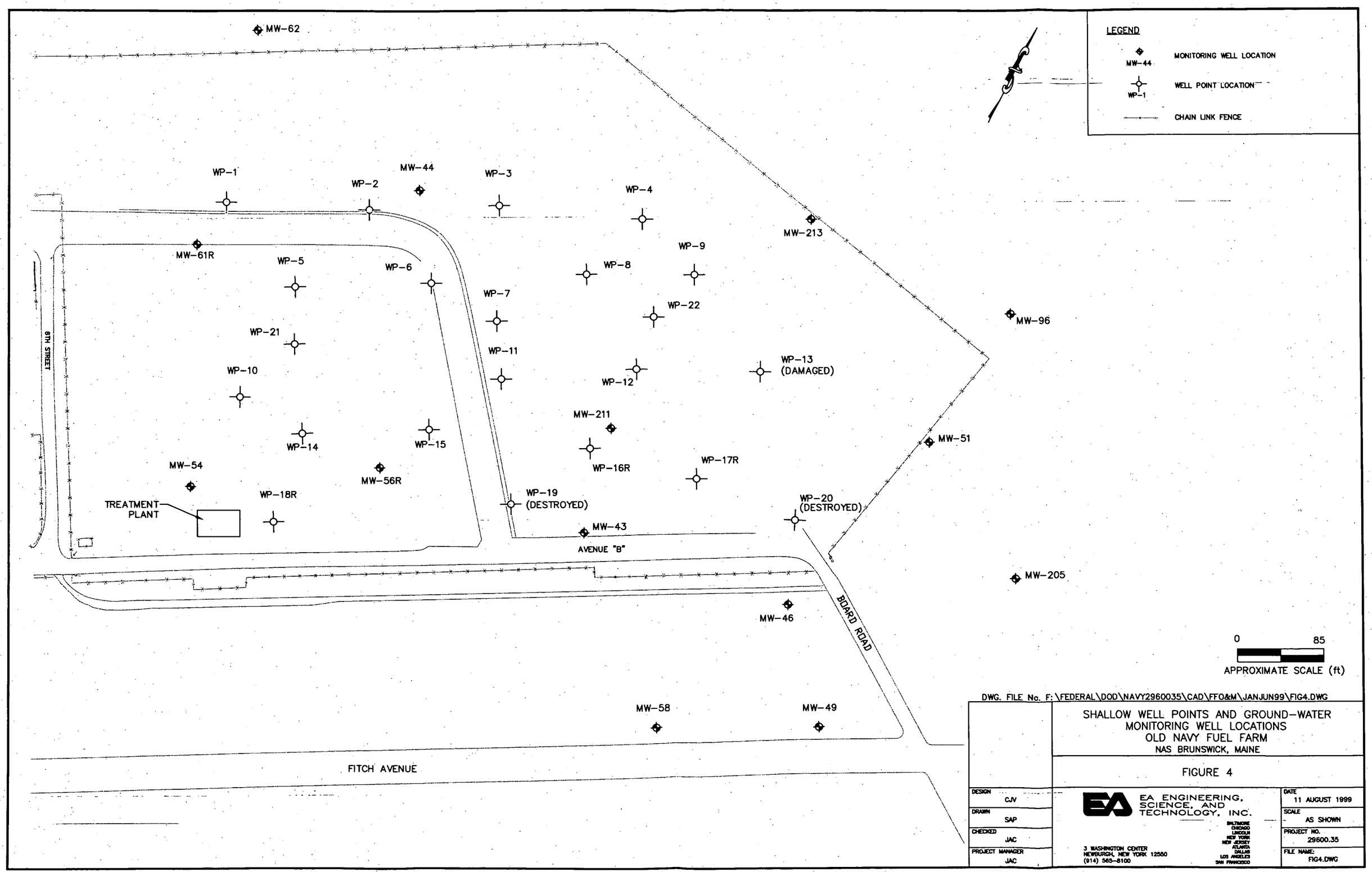

DWG. FILE No. F:\FEDERAL\DOD\NAVY2960035\CAD\FFO&M\JANJUN99\FIG4.DWG

SHALLOW WELL POINTS AND GROUND-WATER MONITORING WELL LOCATIONS
OLD NAVY FUEL FARM
NAS BRUNSWICK, MAINE

FIGURE 4

DESIGN	CJV
DRAWN	SAP
CHECKED	JAC
PROJECT MANAGER	JAC

EA ENGINEERING, SCIENCE, AND TECHNOLOGY, INC.
BALTIMORE CHICAGO LINCOLN NEW YORK NEW JERSEY ATLANTA DALLAS LOS ANGELES SAN FRANCISCO
3 WASHINGTON CENTER
NEWBURGH, NEW YORK 12550
(914) 565-8100

DATE	11 AUGUST 1999
SCALE	AS SHOWN
PROJECT NO.	29600.35
FILE NAME:	FIG4.DWG

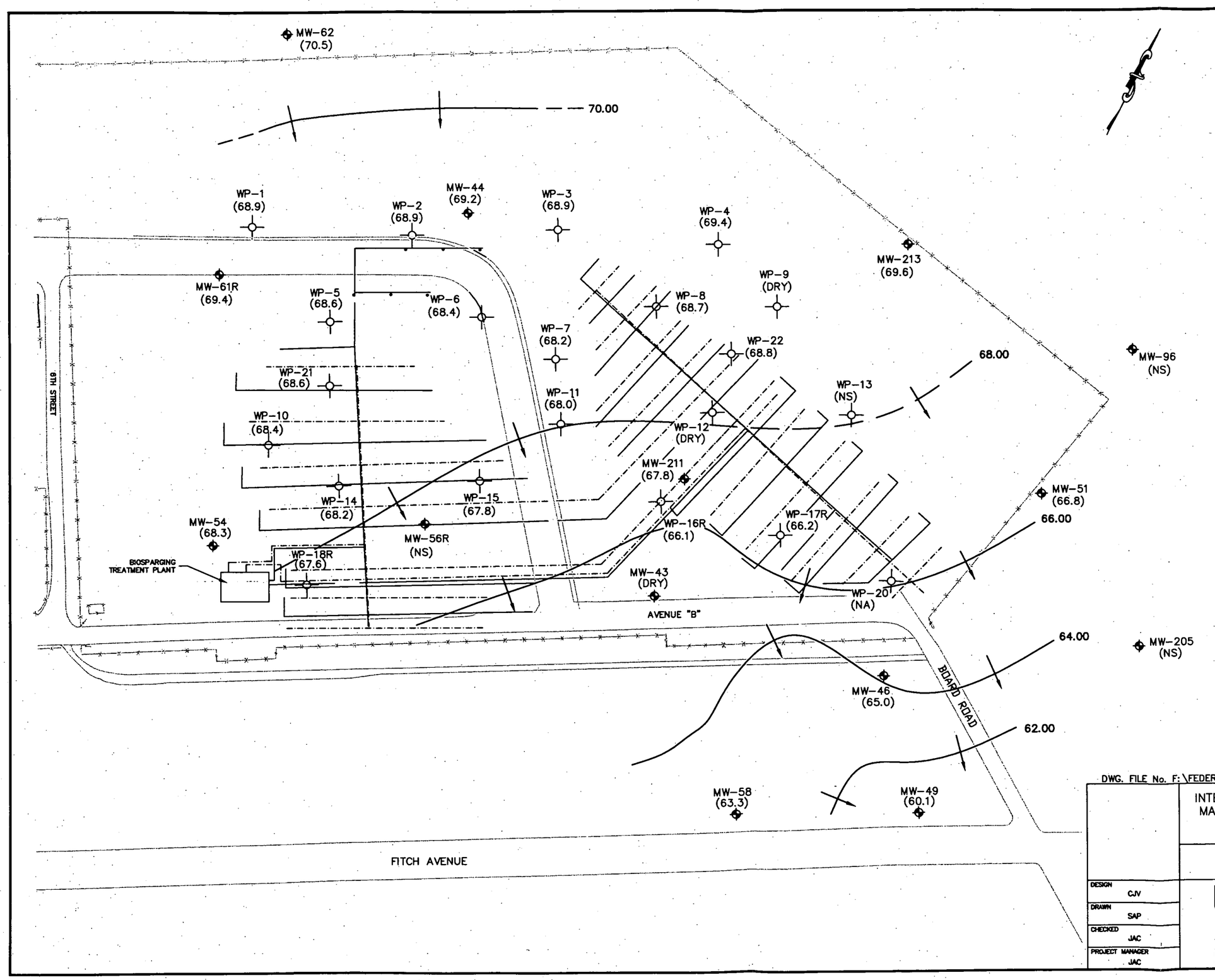

LEGEND

MW-44 (69.2)	MONITORING WELL LOCATION WATER TABLE ELEVATION (FT, MSL) NS = LOCATION NOT GAUGED. DRY = WELL DRY DURING GAUGING EVENT
WP-1 (68.9)	WELL POINT LOCATION WATER TABLE ELEVATION (FT, MSL) NS = LOCATION NOT GAUGED. DRY = WELL POINT DRY DURING GAUGING EVENT
	CHAIN LINK FENCE
	SOIL VAPOR EXTRACTION LINE
	AIR SPARGING LINE
	INTERPRETED DIRECTION OF GROUND-WATER FLOW
62.00	WATER TABLE ELEVATION CONTOUR (FT, MSL); DASHED WHERE INFERRED
	CONTOUR INTERVAL = 2.0 FT

NOTE:

1. BIOSPARGING SYSTEM WAS NOT ACTIVE DURING 3 DECEMBER 1998 GAUGING EVENT.
2. CONTOURS SHOWN REPRESENT EA'S EVALUATION OF THE PROBABLE CONDITIONS BASED UPON INTERPRETATION OF THE PRESENTLY AVAILABLE DATA. SOME VARIATIONS FROM THESE CONDITIONS COULD BE EXPECTED.

0 85
APPROXIMATE SCALE (ft)

DWG. FILE No. F:\FEDERAL\DOD\NAVY2960035\CAD\FFO&M\JANJUN99\FIG5.DWG

INTERPRETED GROUND-WATER ELEVATION CONTOUR MAP BASED ON DATA COLLECTED 28 JUNE 1999
OLD NAVY FUEL FARM
NAS BRUNSWICK, MAINE

FIGURE 5

DESIGN	CJV
DRAWN	SAP
CHECKED	JAC
PROJECT MANAGER	JAC

EA ENGINEERING, SCIENCE, AND TECHNOLOGY, INC.
BALTIMORE CHICAGO LINCOLN NEW YORK NEW JERSEY ATLANTA DALLAS LOS ANGELES SAN FRANCISCO
3 WASHINGTON CENTER
NEWBURGH, NEW YORK 12550
(914) 565-6100

DATE	1 AUGUST 1999
SCALE	AS SHOWN
PROJECT NO.	29600.35
FILE NAME:	FIG5.DWG

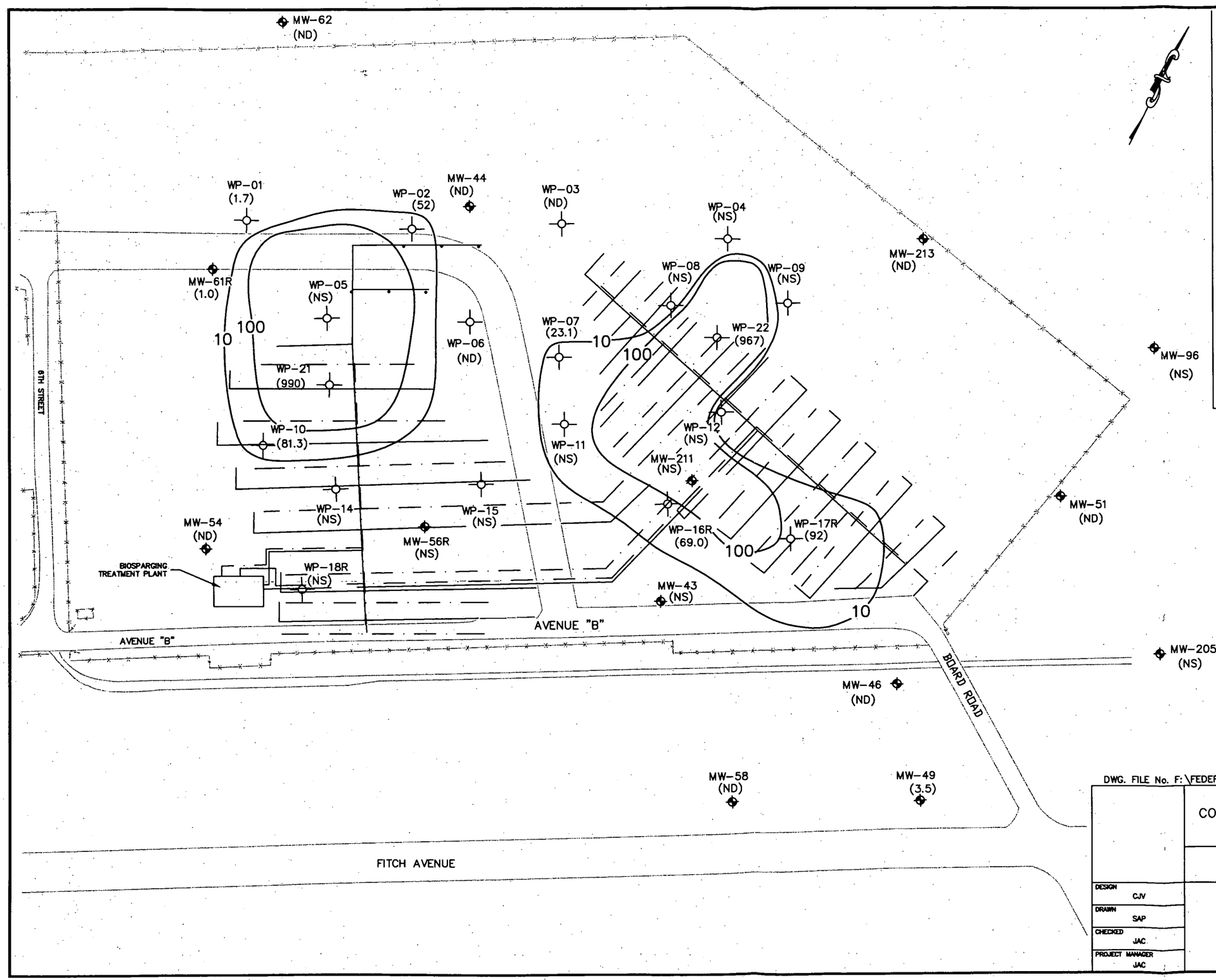

DWG. FILE No. F:\FEDERAL\DOD\NAVY\2960035\CAD\FFO&M\JANJUN99\FIG6.DWG

INTERPRETED DISSOLVED-PHASE BTEX CONCENTRATION ISOPLETH MAP, GROUND-WATER SAMPLES COLLECTED 15-18 JUNE 1999
OLD NAVY FUEL FARM, NAS BRUNSWICK, MAINE

FIGURE 6

DESIGN	CJV
DRAWN	SAP
CHECKED	JAC
PROJECT MANAGER	JAC

EA ENGINEERING, SCIENCE, AND TECHNOLOGY, INC.
BALTIMORE CHICAGO LINCOLN NEW YORK NEW JERSEY ATLANTA DALLAS LOS ANGELES SAN FRANCISCO
3 WASHINGTON CENTER
NEWBURGH, NEW YORK 12550
(914) 565-8100

DATE	13 OCTOBER 1999
SCALE	AS SHOWN
PROJECT NO.	29600.35
FILE NAME:	FIG6.DWG

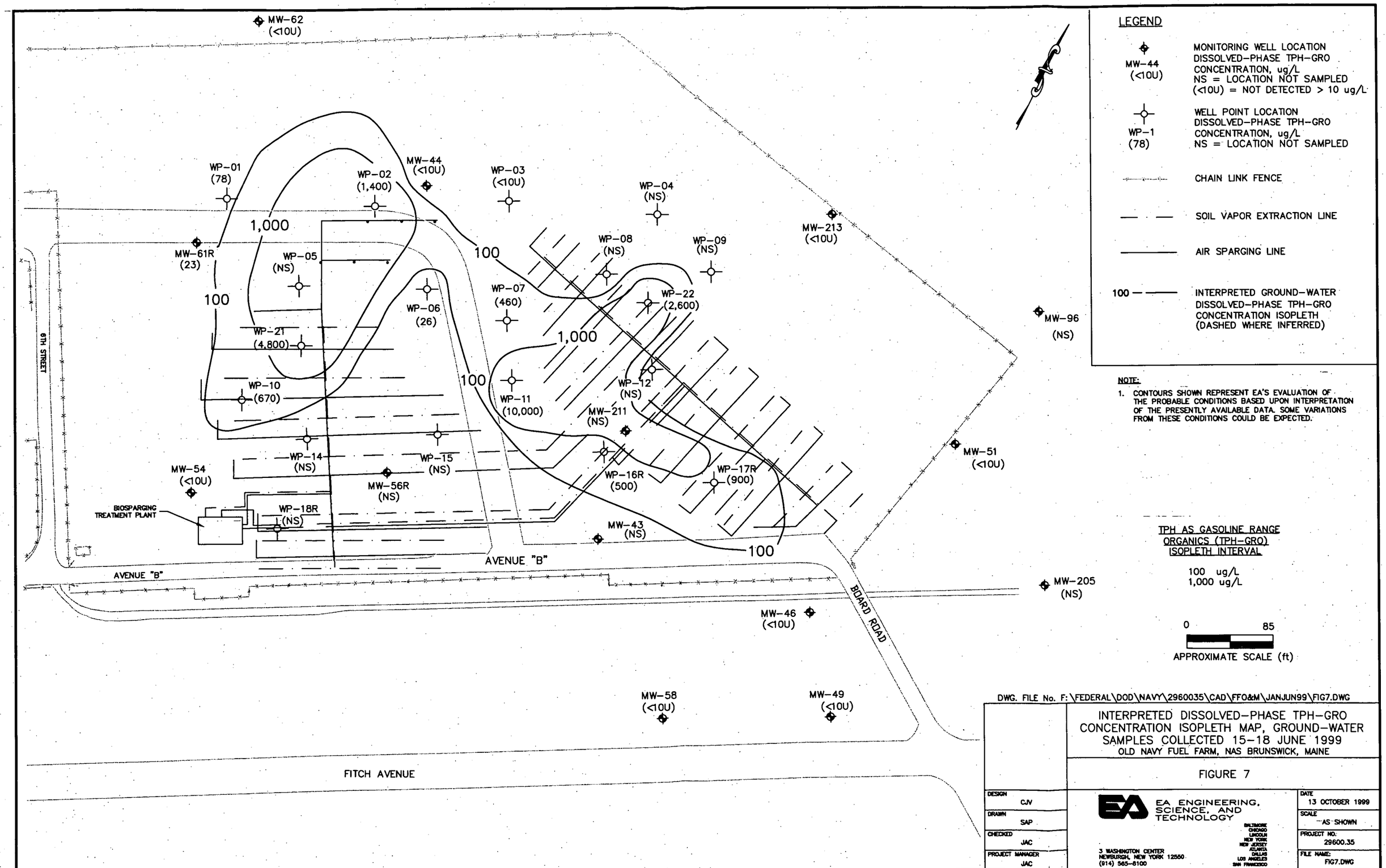
MW-62 (<10U)
WP-01 (78)
WP-02 (1,400)
MW-44 (<10U)
WP-03 (<10U)
WP-04 (NS)
MW-213 (<10U)
MW-61R (23)
WP-05 (NS)
WP-08 (NS)
WP-09 (NS)
WP-07 (460)
WP-06 (26)
WP-22 (2,600)
MW-96 (NS)
WP-21 (4,800)
WP-10 (670)
WP-11 (10,000)
WP-12 (NS)
MW-211 (NS)
MW-51 (<10U)
WP-14 (NS)
WP-15 (NS)
MW-54 (<10U)
MW-56R (NS)
WP-16R (500)
WP-17R (900)
BIOSPARGING TREATMENT PLANT
WP-18R (NS)
MW-43 (NS)
MW-205 (NS)
MW-46 (<10U)
MW-58 (<10U)
MW-49 (<10U)
1,000
100
6TH STREET
AVENUE "B"
BOARD ROAD
FITCH AVENUE
LEGEND
MW-44 (<10U)
MONITORING WELL LOCATION
DISSOLVED-PHASE TPH-GRO CONCENTRATION, ug/L
NS = LOCATION NOT SAMPLED
(<10U) = NOT DETECTED > 10 ug/L
WP-1 (78)
WELL POINT LOCATION
DISSOLVED-PHASE TPH-GRO CONCENTRATION, ug/L
NS = LOCATION NOT SAMPLED
CHAIN LINK FENCE
SOIL VAPOR EXTRACTION LINE
AIR SPARGING LINE
100
INTERPRETED GROUND-WATER DISSOLVED-PHASE TPH-GRO CONCENTRATION ISOPLETH (DASHED WHERE INFERRED)
NOTE:
1. CONTOURS SHOWN REPRESENT EA'S EVALUATION OF THE PROBABLE CONDITIONS BASED UPON INTERPRETATION OF THE PRESENTLY AVAILABLE DATA. SOME VARIATIONS FROM THESE CONDITIONS COULD BE EXPECTED.
TPH AS GASOLINE RANGE ORGANICS (TPH-GRO) ISOPLETH INTERVAL
100 ug/L
1,000 ug/L
0
85
APPROXIMATE SCALE (ft)
DWG. FILE No. F:\FEDERAL\DOD\NAVY\2960035\CAD\FFO&M\JANJUN99\FIG7.DWG
INTERPRETED DISSOLVED-PHASE TPH-GRO CONCENTRATION ISOPLETH MAP, GROUND-WATER SAMPLES COLLECTED 15-18 JUNE 1999
OLD NAVY FUEL FARM, NAS BRUNSWICK, MAINE
FIGURE 7
DESIGN CJV
DRAWN SAP
CHECKED JAC
PROJECT MANAGER JAC
EA ENGINEERING, SCIENCE, AND TECHNOLOGY
3 WASHINGTON CENTER NEWBURGH, NEW YORK 12550 (914) 565-8100
BALTIMORE CHICAGO LINCOLN NEW YORK NEW JERSEY ATLANTA DALLAS LOS ANGELES SAN FRANCISCO
DATE 13 OCTOBER 1999
SCALE AS SHOWN
PROJECT NO. 29600.35
FILE NAME: FIG7.DWG

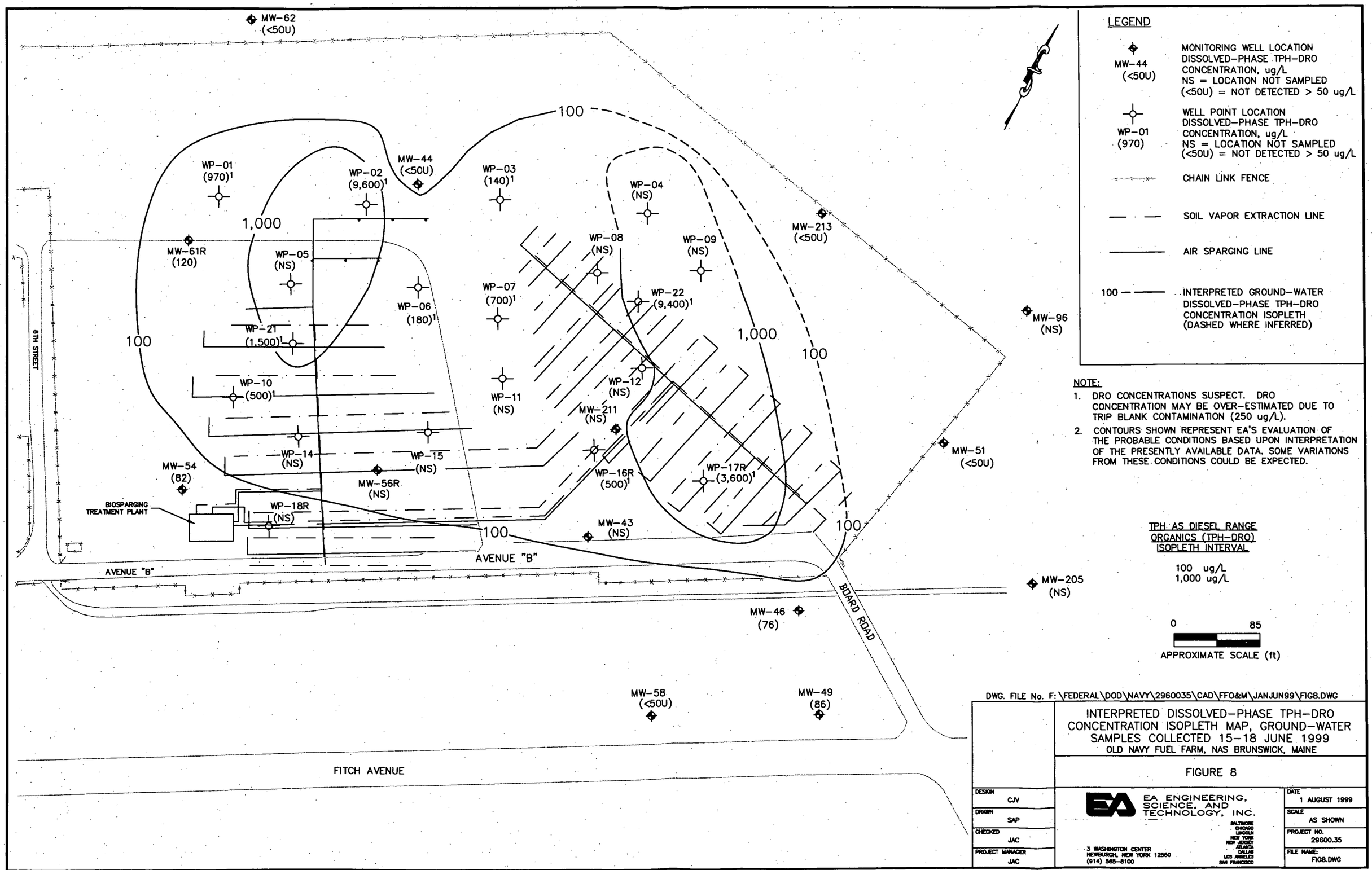
MW-62 (<50U)
MW-44 (<50U)
WP-01 (970)1
WP-02 (9,600)1
WP-03 (140)1
WP-04 (NS)
MW-213 (<50U)
MW-61R (120)
WP-05 (NS)
WP-06 (180)1
WP-07 (700)1
WP-08 (NS)
WP-09 (NS)
WP-22 (9,400)1
MW-96 (NS)
WP-21 (1,500)1
WP-10 (500)1
WP-11 (NS)
WP-12 (NS)
MW-211 (NS)
MW-51 (<50U)
WP-14 (NS)
WP-15 (NS)
MW-54 (82)
MW-56R (NS)
WP-16R (500)1
WP-17R (3,600)1
BIOSPARGING TREATMENT PLANT
WP-18R (NS)
MW-43 (NS)
MW-205 (NS)
MW-46 (76)
MW-58 (<50U)
MW-49 (86)
100
1,000
6TH STREET
AVENUE "B"
BOARD ROAD
FITCH AVENUE
LEGEND
MW-44 (<50U) MONITORING WELL LOCATION DISSOLVED-PHASE TPH-DRO CONCENTRATION, ug/L NS = LOCATION NOT SAMPLED (<50U) = NOT DETECTED > 50 ug/L
WP-01 (970) WELL POINT LOCATION DISSOLVED-PHASE TPH-DRO CONCENTRATION, ug/L NS = LOCATION NOT SAMPLED (<50U) = NOT DETECTED > 50 ug/L
CHAIN LINK FENCE
SOIL VAPOR EXTRACTION LINE
AIR SPARGING LINE
100 INTERPRETED GROUND-WATER DISSOLVED-PHASE TPH-DRO CONCENTRATION ISOPLETH (DASHED WHERE INFERRED)
NOTE:
1. DRO CONCENTRATIONS SUSPECT. DRO CONCENTRATION MAY BE OVER-ESTIMATED DUE TO TRIP BLANK CONTAMINATION (250 ug/L).
2. CONTOURS SHOWN REPRESENT EA'S EVALUATION OF THE PROBABLE CONDITIONS BASED UPON INTERPRETATION OF THE PRESENTLY AVAILABLE DATA. SOME VARIATIONS FROM THESE CONDITIONS COULD BE EXPECTED.
TPH AS DIESEL RANGE ORGANICS (TPH-DRO) ISOPLETH INTERVAL
100 ug/L
1,000 ug/L
0
85
APPROXIMATE SCALE (ft)
DWG. FILE No. F:\FEDERAL\DOD\NAVY\2960035\CAD\FFO&M\JANJUN99\FIG8.DWG
INTERPRETED DISSOLVED-PHASE TPH-DRO CONCENTRATION ISOPLETH MAP, GROUND-WATER SAMPLES COLLECTED 15-18 JUNE 1999
OLD NAVY FUEL FARM, NAS BRUNSWICK, MAINE
FIGURE 8
DESIGN CJV
DRAWN SAP
CHECKED JAC
PROJECT MANAGER JAC
EA ENGINEERING, SCIENCE, AND TECHNOLOGY, INC.
BALTIMORE CHICAGO LINCOLN NEW YORK NEW JERSEY ATLANTA DALLAS LOS ANGELES SAN FRANCISCO
3 WASHINGTON CENTER NEWBURGH, NEW YORK 12550 (914) 565-8100
DATE 1 AUGUST 1999
SCALE AS SHOWN
PROJECT NO. 29600.35
FILE NAME: FIG8.DWG

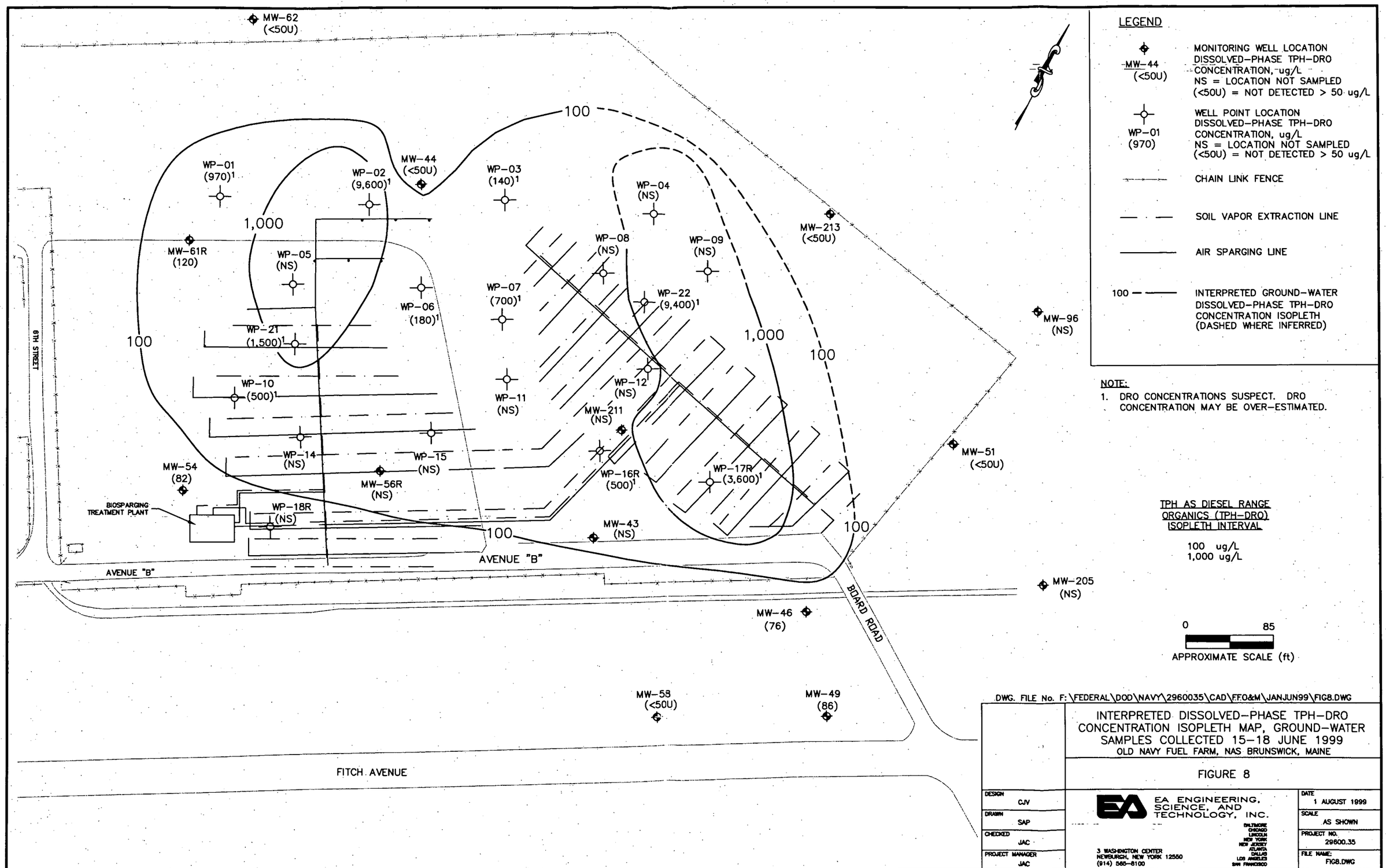
MW-62 (<50U)
MW-44 (<50U)
WP-01 (970)1
WP-02 (9,600)1
WP-03 (140)1
WP-04 (NS)
MW-213 (<50U)
MW-61R (120)
WP-05 (NS)
WP-08 (NS)
WP-09 (NS)
WP-07 (700)1
WP-06 (180)1
WP-22 (9,400)1
MW-96 (NS)
WP-21 (1,500)1
WP-10 (500)1
WP-11 (NS)
WP-12 (NS)
MW-211 (NS)
WP-14 (NS)
WP-15 (NS)
MW-51 (<50U)
MW-54 (82)
MW-56R (NS)
WP-16R (500)1
WP-17R (3,600)1
BIOSPARGING TREATMENT PLANT
WP-18R (NS)
MW-43 (NS)
100
1,000
AVENUE "B"
MW-205 (NS)
MW-46 (76)
BEARD ROAD
6TH STREET
MW-58 (<50U)
MW-49 (86)
FITCH AVENUE
LEGEND
MW-44 (<50U) MONITORING WELL LOCATION DISSOLVED-PHASE TPH-DRO CONCENTRATION, ug/L NS = LOCATION NOT SAMPLED (<50U) = NOT DETECTED > 50 ug/L
WP-01 (970) WELL POINT LOCATION DISSOLVED-PHASE TPH-DRO CONCENTRATION, ug/L NS = LOCATION NOT SAMPLED (<50U) = NOT DETECTED > 50 ug/L
CHAIN LINK FENCE
SOIL VAPOR EXTRACTION LINE
AIR SPARGING LINE
100 INTERPRETED GROUND-WATER DISSOLVED-PHASE TPH-DRO CONCENTRATION ISOPLETH (DASHED WHERE INFERRED)
NOTE:
1. DRO CONCENTRATIONS SUSPECT. DRO CONCENTRATION MAY BE OVER-ESTIMATED.
TPH AS DIESEL RANGE ORGANICS (TPH-DRO) ISOPLETH INTERVAL
100 ug/L
1,000 ug/L
0 85
APPROXIMATE SCALE (ft)
DWG. FILE No. F:\FEDERAL\DOD\NAVY\2960035\CAD\FFO&M\JANJUN99\FIG8.DWG
INTERPRETED DISSOLVED-PHASE TPH-DRO CONCENTRATION ISOPLETH MAP, GROUND-WATER SAMPLES COLLECTED 15-18 JUNE 1999
OLD NAVY FUEL FARM, NAS BRUNSWICK, MAINE
FIGURE 8
DESIGN CJV
DRAWN SAP
CHECKED JAC
PROJECT MANAGER JAC
EA ENGINEERING, SCIENCE, AND TECHNOLOGY, INC.
BALTIMORE CHICAGO LINCOLN NEW YORK NEW JERSEY ATLANTA DALLAS LOS ANGELES SAN FRANCISCO
3 WASHINGTON CENTER NEWBURGH, NEW YORK 12550 (914) 565-8100
DATE 1 AUGUST 1999
SCALE AS SHOWN
PROJECT NO. 29600.35
FILE NAME: FIG8.DWG

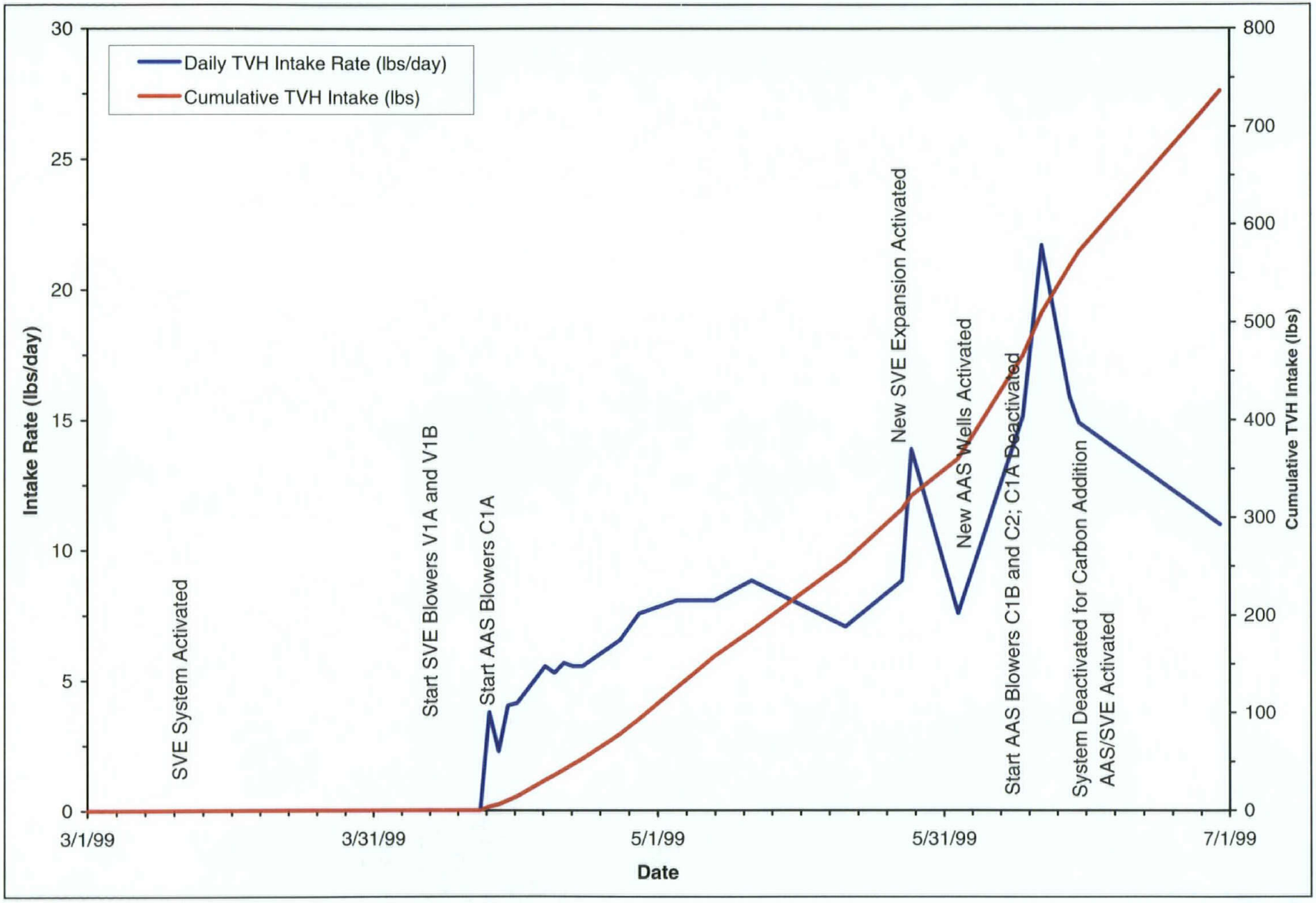

Figure 9. Soil vapor extraction/aquifier air sparging treatment system intake.

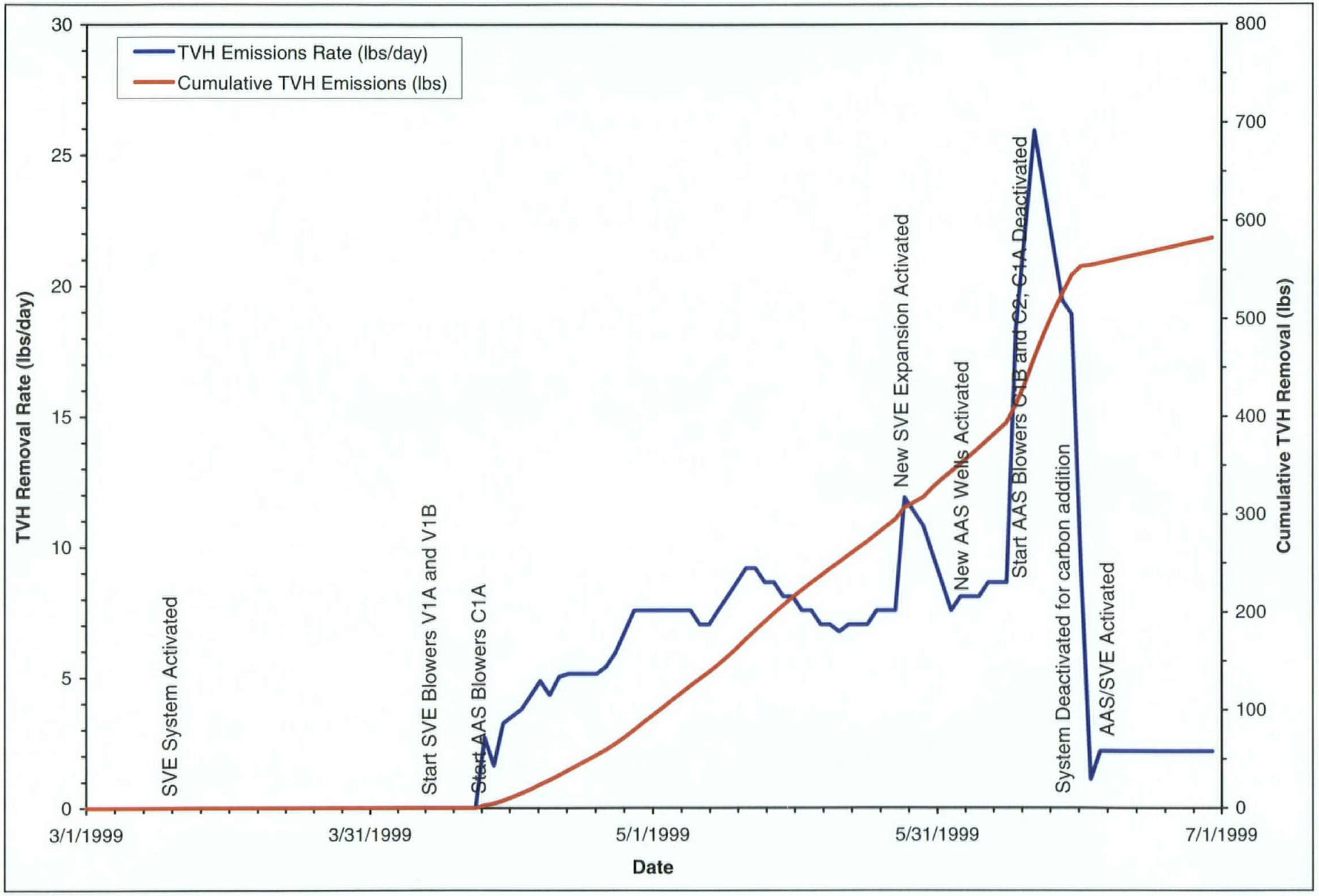

Figure 10. Soil vapor extraction/aquifier air sparging treatment system performance.

Appendix A

Summary Tables

TABLE A-1 SUMMARY OF WELL GAUGING DATA COLLECTED
FROM 1 JANUARY THROUGH 30 JUNE 1999
OLD NAVY FUEL FARM, NAVAL AIR STATION, BRUNSWICK, MAINE

Gauging Date	Well Elevation (ft MSL)	Depth to Water (ft)	Depth to LNAPL (ft)	LNAPL Thickness (ft)	Water Elevation (ft)
MW-43					
30 Jan 1999	73.88		---	---	
15 Feb 1999	73.88		---	---	
25 Feb 1999	73.88		---	---	
03 Mar 1999	73.88	4.82	---	---	69.1
24 Mar 1999	73.88	5.43	---	---	68.4
15 Apr 1999	73.88		---	---	
30 Apr 1999	73.88		---	---	
14 May 1999	73.88	7.01	---	---	66.9
28 May 1999	73.88	6.62	---	---	67.3
14 Jun 1999	73.88		---	---	
28 Jun 1999	73.88		---	---	
MW-44					
30 Jan 1999	73.18	3.05	---	---	70.1
15 Feb 1999	73.18	2.78	---	---	70.4
25 Feb 1999	73.18	2.95	---	---	70.2
03 Mar 1999	73.18	2.11	---	---	71.1
24 Mar 1999	73.18	2.05	---	---	71.1
15 Apr 1999	73.18	2.83	---	---	70.3
30 Apr 1999	73.18	3.18	---	---	70.0
14 May 1999	73.18	3.46	---	---	69.7
28 May 1999	73.18	3.07	---	---	70.1
14 Jun 1999	73.18	3.61	---	---	69.6
28 Jun 1999	73.18	4.01	---	---	69.2
MW-46					
30 Jan 1999	71.02	4.3	---	---	66.7
15 Feb 1999	71.02	4.42	---	---	66.6
25 Feb 1999	71.02	4.77	---	---	66.3
03 Mar 1999	71.02	4.08	---	---	66.9
24 Mar 1999	71.02	3.38	---	---	67.6
15 Apr 1999	71.02	4.37	---	---	66.6
30 Apr 1999	71.02	5.21	---	---	65.8
14 May 1999	71.02	5.15	---	---	65.9
28 May 1999	71.02	4.66	---	---	66.4
14 Jun 1999	71.02	5.52	---	---	65.5
28 Jun 1999	71.02	5.98	---	---	65.0
MW-49					
30 Jan 1999	66.97	4.6	---	---	62.4
15 Feb 1999	66.97	4.48	---	---	62.5
25 Feb 1999	66.97	5.7	---	---	61.3
03 Mar 1999	66.97	5.14	---	---	61.8
24 Mar 1999	66.97	5.1	---	---	61.9
15 Apr 1999	66.97	5.55	---	---	61.4
30 Apr 1999	66.97	5.81	---	---	61.2
14 May 1999	66.97	5.74	---	---	61.2
28 May 1999	66.97	5.52	---	---	61.5
14 Jun 1999	66.97	5.52	---	---	61.5
28 Jun 1999	66.97	6.85	---	---	60.1

TABLE A-1 (Continued)

Gauging Date	Well Elevation (ft MSL)	Depth to Water (ft)	Depth to LNAPL (ft)	LNAPL Thickness (ft)	Water Elevation (ft)
MW-51					
30 Jan 1999	73.2	4.1	---	---	69.1
15 Feb 1999	73.2	4.05	---	---	69.1
25 Feb 1999	73.2	4.4	---	---	68.8
03 Mar 1999	73.2	3.51	---	---	69.7
24 Mar 1999	73.2	3.65	---	---	69.5
15 Apr 1999	73.2	4.06	---	---	69.1
30 Apr 1999	73.2	4.35	---	---	68.8
14 May 1999	73.2	4.46	---	---	68.7
28 May 1999	73.2	4.16	---	---	69.0
14 Jun 1999	73.2	5.65	---	---	67.5
28 Jun 1999	73.2	6.43	---	---	66.8
MW-54					
30 Jan 1999	75.49	5.57	---	---	69.9
15 Feb 1999	75.49	5.9	---	---	69.6
25 Feb 1999	75.49	6.02	---	---	69.5
03 Mar 1999	75.49	5.2	---	---	70.3
24 Mar 1999	75.49	4.25	---	---	71.2
15 Apr 1999	75.49	6.8	---	---	68.7
30 Apr 1999	75.49	6.22	---	---	69.3
14 May 1999	75.49	6.17	---	---	69.3
28 May 1999	75.49	5.75	---	---	69.7
14 Jun 1999	75.49	7.74	---	---	67.8
28 Jun 1999	75.49	7.18	---	---	68.3
MW-58					
30 Jan 1999	69.8	5.89	---	---	63.9
15 Feb 1999	69.8	5.9	---	---	63.9
25 Feb 1999	69.8	5.96	---	---	63.8
03 Mar 1999	69.8	7.82	---	---	62.0
24 Mar 1999	69.8	5.5	---	---	64.3
15 Apr 1999	69.8	5.9	---	---	63.9
30 Apr 1999	69.8	6.11	---	---	63.7
14 May 1999	69.8	6.18	---	---	63.6
28 May 1999	69.8	6.08	---	---	63.7
14 Jun 1999	69.8	6.22	---	---	63.6
28 Jun 1999	69.8	6.47	---	---	63.3
MW-61R					
30 Jan 1999	75.52	5	---	---	70.5
15 Feb 1999	75.52	4.7	---	---	70.8
25 Feb 1999	75.52	5.07	---	---	70.4
03 Mar 1999	75.52	3.84	---	---	71.7
24 Mar 1999	75.52	3.56	---	---	72.0
15 Apr 1999	75.52	4.7	---	---	70.8
30 Apr 1999	75.52	5.26	---	---	70.3
14 May 1999	75.52	5.2	---	---	70.3
28 May 1999	75.52	4.62	---	---	70.9
14 Jun 1999	75.52	5.75	---	---	69.8
28 Jun 1999	75.52	6.1	---	---	69.4

TABLE A-1 (Continued)

Gauging Date	Well Elevation (ft MSL)	Depth to Water (ft)	Depth to LNAPL (ft)	LNAPL Thickness (ft)	Water Elevation (ft)
MW-62					
30 Jan 1999	80.78	8.05	---	---	72.7
15 Feb 1999	80.78	8.08	---	---	72.7
25 Feb 1999	80.78	8.25	---	---	72.5
03 Mar 1999	80.78	7.79	---	---	73.0
24 Mar 1999	80.78	7.84	---	---	72.9
15 Apr 1999	80.78	6.41	---	---	74.4
30 Apr 1999	80.78	8.91	---	---	71.9
14 May 1999	80.78	8.85	---	---	71.9
28 May 1999	80.78	8.5	---	---	72.3
14 Jun 1999	80.78	9.61	---	---	71.2
28 Jun 1999	80.78	10.31	---	---	70.5
MW-NASB-211					
30 Jan 1999	75.55	6.07	---	---	69.5
15 Feb 1999	75.55	6.48	---	---	69.1
25 Feb 1999	75.55	6.12	---	---	69.4
03 Mar 1999	75.55	7.97	---	---	67.6
24 Mar 1999	75.55	5.07	---	---	70.5
15 Apr 1999	75.55	6.57	---	---	69.0
30 Apr 1999	75.55	7.02	---	---	68.5
14 May 1999	75.55	7.18	---	---	68.4
28 May 1999	75.55	6.57	---	---	69.0
14 Jun 1999	75.55	7.19	---	---	68.4
28 Jun 1999	75.55	7.78	---	---	67.8
MW-NASB-213					
30 Jan 1999	76.81	4.55	---	---	72.3
15 Feb 1999	76.81	4.71	---	---	72.1
25 Feb 1999	76.81	4.99	---	---	71.8
03 Mar 1999	76.81	4.17	---	---	72.6
24 Mar 1999	76.81	4.12	---	---	72.7
15 Apr 1999	76.81	4.71	---	---	72.1
30 Apr 1999	76.81	6.66	---	---	70.1
14 May 1999	76.81	5.79	---	---	71.0
28 May 1999	76.81	5.6	---	---	71.2
14 Jun 1999	76.81	6.45	---	---	70.4
28 Jun 1999	76.81	7.2	---	---	69.6
WP-01					
30 Jan 1999	74.84	4.75	---	---	70.1
15 Feb 1999	74.84	4.37	---	---	70.5
25 Feb 1999	74.84	4.97	---	---	69.9
03 Mar 1999	74.84	3.71	---	---	71.1
24 Mar 1999	74.84	3.39	---	---	71.4
15 Apr 1999	74.84	4.55	---	---	70.3
30 Apr 1999	74.84	5.08	---	---	69.8
14 May 1999	74.84	5.07	---	---	69.8
28 May 1999	74.84	4.65	---	---	70.2
14 Jun 1999	74.84	5.62	---	---	69.2
28 Jun 1999	74.84	5.9	---	---	68.9

TABLE A-1 (Continued)

Gauging Date	Well Elevation (ft MSL)	Depth to Water (ft)	Depth to LNAPL (ft)	LNAPL Thickness (ft)	Water Elevation (ft)
WP-02					
30 Jan 1999	75.25	5.57	---	---	69.7
15 Feb 1999	75.25	5.25	---	---	70.0
25 Feb 1999	75.25	5.52	---	---	69.7
03 Mar 1999	75.25	4.42	---	---	70.8
24 Mar 1999	75.25	4.47	---	---	70.8
15 Apr 1999	75.25	5.27	---	---	70.0
30 Apr 1999	75.25	5.74	---	---	69.5
14 May 1999	75.25	6.92	---	---	68.3
28 May 1999	75.25	5.62	---	---	69.6
14 Jun 1999	75.25	6.07	---	---	69.2
28 Jun 1999	75.25	6.38	---	---	68.9
WP-03					
30 Jan 1999	74.16	3.93	---	---	70.2
15 Feb 1999	74.16	3.82	---	---	70.3
25 Feb 1999	74.16	4.02	---	---	70.1
03 Mar 1999	74.16	3.5	---	---	70.7
24 Mar 1999	74.16	3.1	---	---	71.1
15 Apr 1999	74.16	4.16	---	---	70.0
30 Apr 1999	74.16	4.32	---	---	69.8
14 May 1999	74.16	4.31	---	---	69.9
28 May 1999	74.16	4.04	---	---	70.1
14 Jun 1999	74.16	4.81	---	---	69.4
28 Jun 1999	74.16	5.22	---	---	68.9
WP-04					
30 Jan 1999	76.18	5.1	---	---	71.1
15 Feb 1999	76.18	5.21	---	---	71.0
25 Feb 1999	76.18	5.25	---	---	70.9
03 Mar 1999	76.18	4.18	---	---	72.0
24 Mar 1999	76.18	3.5	---	---	72.7
15 Apr 1999	76.18	5.08	---	---	71.1
30 Apr 1999	76.18	5.71	---	---	70.5
14 May 1999	76.18	5.7	---	---	70.5
28 May 1999	76.18	4.74	---	---	71.4
14 Jun 1999	76.18	6.09	---	---	70.1
28 Jun 1999	76.18	6.8	---	---	69.4
WP-05					
30 Jan 1999	74.64	5.27	---	---	69.4
15 Feb 1999	74.64	5.26	---	---	69.4
25 Feb 1999	74.64	5.37	---	---	69.3
03 Mar 1999	74.64	3.92	---	---	70.7
24 Mar 1999	74.64	4.56	---	---	70.1
15 Apr 1999	74.64	5.38	---	---	69.3
30 Apr 1999	74.64	5.61	---	---	69.0
14 May 1999	74.64	5.57	---	---	69.1
28 May 1999	74.64	5.51	---	---	69.1
14 Jun 1999	74.64	5.84	---	---	68.8
28 Jun 1999	74.64	6.03	---	---	68.6

TABLE A-1 (Continued)

Gauging Date	Well Elevation (ft MSL)	Depth to Water (ft)	Depth to LNAPL (ft)	LNAPL Thickness (ft)	Water Elevation (ft)
WP-06					
30 Jan 1999	73.72	4.3	---	---	69.4
15 Feb 1999	73.72	4.17	---	---	69.6
25 Feb 1999	73.72	4.22	---	---	69.5
03 Mar 1999	73.72	3.83	---	---	69.9
24 Mar 1999	73.72	3.33	---	---	70.4
15 Apr 1999	73.72	4.53	---	---	69.2
30 Apr 1999	73.72	4.76	---	---	69.0
14 May 1999	73.72	4.76	---	---	69.0
28 May 1999	73.72	4.35	---	---	69.4
14 Jun 1999	73.72	4.93	---	---	68.8
28 Jun 1999	73.72	5.29	---	---	68.4
WP-07					
30 Jan 1999	73.92	4.7	---	---	69.2
15 Feb 1999	73.92	4.57	---	---	69.3
25 Feb 1999	73.92	4.59	---	---	69.3
03 Mar 1999	73.92	4.24	---	---	69.7
24 Mar 1999	73.92	3.4	---	---	70.5
15 Apr 1999	73.92	5.02	---	---	68.9
30 Apr 1999	73.92	5.15	---	---	68.8
14 May 1999	73.92	5.14	---	---	68.8
28 May 1999	73.92	4.6	---	---	69.3
14 Jun 1999	73.92	5.3	---	---	68.6
28 Jun 1999	73.92	5.71	---	---	68.2
WP-08					
30 Jan 1999	74.99	4.68	---	---	70.3
15 Feb 1999	74.99	4.52	---	---	70.5
25 Feb 1999	74.99	4.56	---	---	70.4
03 Mar 1999	74.99	3.6	---	---	71.4
24 Mar 1999	74.99	3.57	---	---	71.4
15 Apr 1999	74.99	6.28	---	---	68.7
30 Apr 1999	74.99	5.6	---	---	69.4
14 May 1999	74.99	5.61	---	---	69.4
28 May 1999	74.99	5.07	---	---	69.9
14 Jun 1999	74.99	5.75	---	---	69.2
28 Jun 1999	74.99	6.27	---	---	68.7
WP-09					
30 Jan 1999	75.46	7	---	---	68.5
15 Feb 1999	75.46	7.03	---	---	68.4
25 Feb 1999	75.46	7.67	---	---	67.8
03 Mar 1999	75.46	6.64	---	---	68.8
24 Mar 1999	75.46	4.56	---	---	70.9
15 Apr 1999	75.46	5.49	---	---	70.0
30 Apr 1999	75.46	6.55	---	---	68.9
14 May 1999	75.46	7.07	---	---	68.4
28 May 1999	75.46	6.76	---	---	68.7
14 Jun 1999	75.46		---	---	
28 Jun 1999	75.46		---	---	

TABLE A-1 (Continued)

Gauging Date	Well Elevation (ft MSL)	Depth to Water (ft)	Depth to LNAPL (ft)	LNAPL Thickness (ft)	Water Elevation (ft)
WP-10					
30 Jan 1999	74.83	5.1	---	---	69.7
15 Feb 1999	74.83	5.22	---	---	69.6
25 Feb 1999	74.83	5.3	---	---	69.5
03 Mar 1999	74.83	4.53	---	---	70.3
24 Mar 1999	74.83	3.57	---	---	71.3
15 Apr 1999	74.83	5.09	---	---	69.7
30 Apr 1999	74.83	5.63	---	---	69.2
14 May 1999	74.83	5.52	---	---	69.3
28 May 1999	74.83	4.75	---	---	70.1
14 Jun 1999	74.83	6.01	---	---	68.8
28 Jun 1999	74.83	6.45	---	---	68.4
WP-11					
30 Jan 1999	74.06	5.05	---	---	69.0
15 Feb 1999	74.06	5.01	---	---	69.0
25 Feb 1999	74.06	4.99	---	---	69.1
03 Mar 1999	74.06	4.78	---	---	69.3
24 Mar 1999	74.06	4.05	---	---	70.0
15 Apr 1999	74.06	5.44	---	---	68.6
30 Apr 1999	74.06	5.56	---	---	68.5
14 May 1999	74.06	5.52	---	---	68.5
28 May 1999	74.06	5.05	---	---	69.0
14 Jun 1999	74.06	5.69	---	---	68.4
28 Jun 1999	74.06	6.07	---	---	68.0
WP-12					
30 Jan 1999	75.12	6.15	---	---	69.0
15 Feb 1999	75.12	6.4	---	---	68.7
25 Feb 1999	75.12	6.5	---	---	68.6
03 Mar 1999	75.12	5.28	---	---	69.8
24 Mar 1999	75.12	5	---	---	70.1
15 Apr 1999	75.12	6.38	---	---	68.7
30 Apr 1999	75.12	7.05	---	---	68.1
14 May 1999	75.12	7.24	---	---	67.9
28 May 1999	75.12	6.7	---	---	68.4
14 Jun 1999	75.12	7.23	---	---	67.9
28 Jun 1999	75.12		---	---	
WP-13					
30 Jan 1999	74.34		---	---	
15 Feb 1999	74.34		---	---	
25 Feb 1999	74.34		---	---	
03 Mar 1999	74.34		---	---	
24 Mar 1999	74.34	2.83	---	---	71.5
15 Apr 1999	74.34		---	---	
30 Apr 1999	74.34		---	---	
14 May 1999	74.34	6.15	---	---	68.2
28 May 1999	74.34	4.8	---	---	69.5
14 Jun 1999	74.34		---	---	

TABLE A-1 (Continued)

Gauging Date	Well Elevation (ft MSL)	Depth to Water (ft)	Depth to LNAPL (ft)	LNAPL Thickness (ft)	Water Elevation (ft)
WP-14					
30 Jan 1999	75.18	5.5	---	---	69.7
15 Feb 1999	75.18	5.75	---	---	69.4
25 Feb 1999	75.18	5.66	---	---	69.5
03 Mar 1999	75.18	5.44	---	---	69.7
24 Mar 1999	75.18	4.36	---	---	70.8
15 Apr 1999	75.18	5.91	---	---	69.3
30 Apr 1999	75.18	6.2	---	---	69.0
14 May 1999	75.18	6.1	---	---	69.1
28 May 1999	75.18	5.61	---	---	69.6
14 Jun 1999	75.18	6.52	---	---	68.7
28 Jun 1999	75.18	6.98	---	---	68.2
WP-15					
30 Jan 1999	74.54	5.43	---	---	69.1
15 Feb 1999	74.54	5.61	---	---	68.9
25 Feb 1999	74.54	4.87	---	---	69.7
03 Mar 1999	74.54	5.4	---	---	69.1
24 Mar 1999	74.54	4.3	---	---	70.2
15 Apr 1999	74.54	5.86	---	---	68.7
30 Apr 1999	74.54	6.15	---	---	68.4
14 May 1999	74.54	6	---	---	68.5
28 May 1999	74.54	5.41	---	---	69.1
14 Jun 1999	74.54	6.27	---	---	68.3
28 Jun 1999	74.54	6.7	---	---	67.8
WP-16R					
30 Jan 1999	73.33		---	---	
15 Feb 1999	73.33		---	---	
25 Feb 1999	73.33	7.11	---	---	66.2
03 Mar 1999	73.33	6.96	---	---	66.4
24 Mar 1999	73.33	5.21	---	---	68.1
15 Apr 1999	73.33	6.34	---	---	67.0
30 Apr 1999	73.33	7.2	---	---	66.1
14 May 1999	73.33	7.69	---	---	65.6
28 May 1999	73.33	7.66	---	---	65.7
14 Jun 1999	73.33		---	---	
28 Jun 1999	73.33	7.19	---	---	66.1
WP-17R					
30 Jan 1999	74.74		---	---	
15 Feb 1999	74.74		---	---	
25 Feb 1999	74.74	7.2	---	---	67.5
03 Mar 1999	74.74	6.39	---	---	68.3
24 Mar 1999	74.74	5.25	---	---	69.5
15 Apr 1999	74.74	7.01	---	---	67.7
30 Apr 1999	74.74	7.61	---	---	67.1
14 May 1999	74.74	7.98	---	---	66.8
28 May 1999	74.74	7.65	---	---	67.1
14 Jun 1999	74.74	8.14	---	---	66.6
28 Jun 1999	74.74	8.5	---	---	66.2

TABLE A-1 (Continued)

Gauging Date	Well Elevation (ft MSL)	Depth to Water (ft)	Depth to LNAPL (ft)	LNAPL Thickness (ft)	Water Elevation (ft)
WP-18R					
30 Jan 1999	74.81		---	---	
15 Feb 1999	74.81		---	---	
25 Feb 1999	74.81	6.29	---	---	68.5
03 Mar 1999	74.81	5.44	---	---	69.4
24 Mar 1999	74.81	4.21	---	---	70.6
15 Apr 1999	74.81	5.74	---	---	69.1
30 Apr 1999	74.81	6.04	---	---	68.8
14 May 1999	74.81	6	---	---	68.8
28 May 1999	74.81	5.71	---	---	69.1
14 Jun 1999	74.81	6.76	---	---	68.0
28 Jun 1999	74.81	7.17	---	---	67.6
WP-20					
30 Jan 1999	72.67		---	---	
15 Feb 1999	72.67		---	---	
25 Feb 1999	72.67		---	---	
03 Mar 1999	72.67		---	---	
24 Mar 1999	72.67		---	---	
15 Apr 1999	72.67		---	---	
WP-21					
30 Jan 1999	75.77		---	---	
15 Feb 1999	75.77		---	---	
25 Feb 1999	75.77	5.97	---	---	69.8
03 Mar 1999	75.77	5.72	---	---	70.0
24 Mar 1999	75.77	4.65	---	---	71.1
15 Apr 1999	75.77	6.15	---	---	69.6
30 Apr 1999	75.77	6.5	---	---	69.3
14 May 1999	75.77	6.54	---	---	69.2
28 May 1999	75.77	5.9	---	---	69.9
14 Jun 1999	75.77	6.83	---	---	68.9
28 Jun 1999	75.77	7.17	---	---	68.6
WP-22					
30 Jan 1999	76.1		---	---	
15 Feb 1999	76.1		---	---	
25 Feb 1999	76.1	5.41	---	---	70.7
03 Mar 1999	76.1	5.05	---	---	71.0
24 Mar 1999	76.1	4.65	---	---	71.4
15 Apr 1999	76.1	6.72	---	---	69.4
30 Apr 1999	76.1	6.62	---	---	69.5
14 May 1999	76.1	6.7	---	---	69.4
28 May 1999	76.1	6.14	---	---	70.0
14 Jun 1999	76.1	6.9	---	---	69.2
28 Jun 1999	76.1	7.33	---	---	68.8

NOTE: LNAPL = Light, non-aqueous phase liquid. Dashes (---) indicate LNAPL not detected.
MSL = Mean sea level.

TABLE A-2 SUMMARY OF WATER QUALITY INDICATOR PARAMETER MEASUREMENTS COLLECTED FROM 1 JANUARY THROUGH 30 JUNE 1999 OLD NAVY FUEL FARM, NAVAL AIR STATION, BRUNSWICK, MAINE

Gauging Date	pH	Temperature (C)	Conductivity (umhos)
MW-43			
30 Jan 1999	---	---	---
15 Feb 1999	---	---	---
25 Feb 1999	---	---	---
03 Mar 1999	6.96	2.4	28
24 Mar 1999	6.69	1.7	12
15 Apr 1999	---	---	---
30 Apr 1999	---	---	---
14 May 1999	---	---	---
28 May 1999	---	---	---
14 Jun 1999	---	---	---
28 Jun 1999	---	---	---
MW-44			
30 Jan 1999	6.20	5.7	66
15 Feb 1999	6.30	5.9	69
25 Feb 1999	6.11	3.7	62
03 Mar 1999	6.53	2.1	61
24 Mar 1999	6.70	1.6	41
15 Apr 1999	7.02	6.4	43
30 Apr 1999	8.61	11.3	46
14 May 1999	6.70	11.6	45
28 May 1999	6.36	14.0	42
14 Jun 1999	6.23	15.9	43
28 Jun 1999	6.64	14.9	39
MW-46			
30 Jan 1999	5.90	6.7	247
15 Feb 1999	5.80	6.5	260
25 Feb 1999	6.82	5.5	231
03 Mar 1999	7.07	5.6	226
24 Mar 1999	6.23	2.5	134
15 Apr 1999	7.37	4.3	139
30 Apr 1999	8.26	7.8	153
14 May 1999	6.33	9.6	160
28 May 1999	7.30	12.7	177
14 Jun 1999	7.80	14.0	192
28 Jun 1999	6.13	13.2	363
MW-49			
30 Jan 1999	6.10	6.2	80
15 Feb 1999	6.20	6.3	91
25 Feb 1999	6.99	6.0	80
03 Mar 1999	6.83	5.9	82
24 Mar 1999	6.40	2.7	56
15 Apr 1999	7.10	5.0	98
30 Apr 1999	8.09	7.9	90
14 May 1999	6.21	9.1	103
28 May 1999	6.89	11.2	109
14 Jun 1999	6.81	12.1	90
28 Jun 1999	6.34	11.7	104

TABLE A-2 (Continued)

Gauging Date	pH	Temperature (C)	Conductivity (umhos)
MW-51			
30 Jan 1999	6.00	4.0	54
15 Feb 1999	6.20	3.9	65
25 Feb 1999	7.04	3.0	48
03 Mar 1999	6.97	3.3	43
24 Mar 1999	6.58	2.1	25
15 Apr 1999	8.00	5.5	28
30 Apr 1999	8.22	9.3	31
14 May 1999	6.69	11.4	33
28 May 1999	7.72	12.9	45
14 Jun 1999	6.97	12.6	38
28 Jun 1999	6.63	11.8	58
MW-54			
30 Jan 1999	7.30	7.0	60
15 Feb 1999	7.10	7.0	70
25 Feb 1999	6.86	5.0	84
03 Mar 1999	5.84	5.6	74
24 Mar 1999	7.56	3.9	50
15 Apr 1999	6.10	5.4	84
30 Apr 1999	7.27	7.3	65
14 May 1999	7.78	9.6	75
28 May 1999	6.33	13.5	89
14 Jun 1999	5.80	12.4	96
28 Jun 1999	6.92	11.0	201
MW-58			
30 Jan 1999	6.10	6.6	51
15 Feb 1999	6.10	6.7	55
25 Feb 1999	7.60	7.1	54
03 Mar 1999	7.28	6.7	52
24 Mar 1999	6.10	6.5	52
15 Apr 1999	7.13	6.2	52
30 Apr 1999	8.42	8.1	56
14 May 1999	6.29	8.6	58
28 May 1999	7.00	11.2	66
14 Jun 1999	7.50	11.9	67
28 Jun 1999	6.36	11.9	66
MW-61R			
30 Jan 1999	6.40	7.1	56
15 Feb 1999	6.50	2.3	62
25 Feb 1999	6.08	2.3	77
03 Mar 1999	6.73	3.3	83
24 Mar 1999	6.94	1.7	73
15 Apr 1999	6.79	6.4	89
30 Apr 1999	6.91	12.1	95
14 May 1999	6.57	12.8	100
28 May 1999	6.20	15.3	108
14 Jun 1999	6.05	17.3	122
28 Jun 1999	5.98	16.2	149

TABLE A-2 (Continued)

Gauging Date	pH	Temperature (C)	Conductivity (umhos)
MW-62			
30 Jan 1999	6.30	6.1	61
15 Feb 1999	6.10	6.3	70
25 Feb 1999	6.27	6.3	65
03 Mar 1999	6.83	7.7	66
24 Mar 1999	6.95	6.8	63
15 Apr 1999	8.14	6.7	65
30 Apr 1999	8.59	7.4	59
14 May 1999	6.64	7.8	55
28 May 1999	6.18	9.3	69
14 Jun 1999	5.94	9.0	39
28 Jun 1999	6.46	9.4	49
MW-NASB-211			
30 Jan 1999	5.80	4.6	176
15 Feb 1999	6.00	4.9	190
25 Feb 1999	5.94	3.9	124
03 Mar 1999	5.98	4.8	131
24 Mar 1999	6.17	2.0	134
15 Apr 1999	5.83	5.7	140
30 Apr 1999	7.70	8.3	131
14 May 1999	6.10	9.0	112
28 May 1999	6.33	13.1	133
14 Jun 1999	5.69	12.6	124
28 Jun 1999	6.05	13.5	270
MW-NASB-213			
30 Jan 1999	6.20	5.0	40
15 Feb 1999	6.30	5.2	55
25 Feb 1999	6.35	5.3	34
03 Mar 1999	6.47	4.1	21
24 Mar 1999	6.64	4.5	21
15 Apr 1999	7.38	7.6	22
30 Apr 1999	8.44	11.1	30
14 May 1999	6.76	11.5	29
28 May 1999	8.01	13.6	33
14 Jun 1999	6.01	14.2	33
28 Jun 1999	6.61	13.6	33
WP-01			
30 Jan 1999	6.00	4.2	297
15 Feb 1999	6.10	4.5	312
25 Feb 1999	6.05	3.0	241
03 Mar 1999	---	---	---
24 Mar 1999	6.67	.7	196
15 Apr 1999	5.40	6.2	243
30 Apr 1999	8.13	13.3	227
14 May 1999	6.25	12.3	191
28 May 1999	6.06	15.2	115
14 Jun 1999	5.58	13.9	386
28 Jun 1999	5.81	14.4	413

TABLE A-2 (Continued)

Gauging Date	pH	Temperature (C)	Conductivity (umhos)
WP-02			
30 Jan 1999	6.20	3.3	108
15 Feb 1999	6.20	3.5	115
25 Feb 1999	6.01	3.0	106
03 Mar 1999	6.58	1.9	56
24 Mar 1999	6.75	2.0	80
15 Apr 1999	5.73	5.9	212
30 Apr 1999	8.57	11.3	145
14 May 1999	6.14	11.0	114
28 May 1999	6.04	14.6	187
14 Jun 1999	5.84	17.4	148
28 Jun 1999	6.20	17.0	143
WP-03			
30 Jan 1999	6.00	5.0	39
15 Feb 1999	6.00	5.1	25
25 Feb 1999	6.10	3.8	29
03 Mar 1999	6.40	4.5	31
24 Mar 1999	6.57	1.2	30
15 Apr 1999	6.14	5.8	33
30 Apr 1999	8.54	10.7	39
14 May 1999	6.25	10.7	44
28 May 1999	6.23	14.3	46
14 Jun 1999	5.82	14.6	40
28 Jun 1999	6.29	13.1	39
WP-04			
30 Jan 1999	6.40	3.9	20
15 Feb 1999	6.30	3.8	21
25 Feb 1999	6.23	2.7	63
03 Mar 1999	6.16	3.4	54
24 Mar 1999	6.34	3.1	44
15 Apr 1999	5.89	6.3	103
30 Apr 1999	8.07	10.1	167
14 May 1999	6.17	11.1	122
28 May 1999	7.70	14.4	109
14 Jun 1999	5.64	13.6	163
28 Jun 1999	6.08	15.0	196
WP-05			
30 Jan 1999	5.70	5.2	64
15 Feb 1999	5.60	5.3	60
25 Feb 1999	6.09	4.5	57
03 Mar 1999	6.54	5.3	47
24 Mar 1999	6.91	4.3	61
15 Apr 1999	5.73	6.1	61
30 Apr 1999	6.95	9.0	66
14 May 1999	6.34	10.2	69
28 May 1999	5.87	12.7	57
14 Jun 1999	5.60	13.9	74
28 Jun 1999	6.06	13.8	76

TABLE A-2 (Continued)

Gauging Date	pH	Temperature (C)	Conductivity (umhos)
WP-06			
30 Jan 1999	6.20	4.0	24
15 Feb 1999	6.20	4.1	29
25 Feb 1999	5.90	3.4	65
03 Mar 1999	6.21	4.1	71
24 Mar 1999	6.35	.9	41
15 Apr 1999	6.15	4.9	45
30 Apr 1999	7.59	8.7	61
14 May 1999	6.01	9.3	60
28 May 1999	5.89	13.2	44
14 Jun 1999	5.70	12.9	86
28 Jun 1999	6.15	12.1	96
WP-07			
30 Jan 1999	5.90	3.5	177
15 Feb 1999	5.90	3.7	179
25 Feb 1999	5.81	2.2	124
03 Mar 1999	6.06	3.3	127
24 Mar 1999	6.30	.7	86
15 Apr 1999	5.76	5.6	190
30 Apr 1999	7.47	9.9	163
14 May 1999	6.01	11.0	240
28 May 1999	6.03	14.4	135
14 Jun 1999	5.61	15.6	207
28 Jun 1999	5.98	13.8	178
WP-08			
30 Jan 1999	6.00	3.6	160
15 Feb 1999	6.10	3.8	168
25 Feb 1999	6.08	3.0	252
03 Mar 1999	6.14	2.7	69
24 Mar 1999	6.13	2.4	92
15 Apr 1999	5.90	5.7	225
30 Apr 1999	7.63	9.1	183
14 May 1999	6.10	10.6	215
28 May 1999	7.72	13.3	273
14 Jun 1999	6.05	14.8	313
28 Jun 1999	5.89	14.9	345
WP-09			
30 Jan 1999	---	---	---
15 Feb 1999	---	---	---
25 Feb 1999	---	---	---
03 Mar 1999	6.02	4.2	122
24 Mar 1999	6.34	3.3	54
15 Apr 1999	6.18	6.5	94
30 Apr 1999	7.66	9.1	145
14 May 1999	6.21	10.3	175
28 May 1999	---	---	---
14 Jun 1999	---	---	---
28 Jun 1999	---	---	---

TABLE A-2 (Continued)

Gauging Date	pH	Temperature (C)	Conductivity (umhos)
WP-10			
30 Jan 1999	6.20	5.8	92
15 Feb 1999	6.10	5.9	102
25 Feb 1999	5.79	5.2	87
03 Mar 1999	6.08	5.4	81
24 Mar 1999	7.38	2.0	33
15 Apr 1999	5.43	5.8	94
30 Apr 1999	7.01	7.6	84
14 May 1999	7.04	9.1	91
28 May 1999	5.65	12.5	97
14 Jun 1999	5.52	11.6	98
28 Jun 1999	6.59	11.0	103
WP-11			
30 Jan 1999	6.00	4.0	39
15 Feb 1999	6.10	4.5	45
25 Feb 1999	5.95	2.5	78
03 Mar 1999	6.00	3.8	94
24 Mar 1999	6.28	1.0	80
15 Apr 1999	5.86	5.3	79
30 Apr 1999	7.71	8.9	93
14 May 1999	6.13	10.6	99
28 May 1999	5.81	12.9	92
14 Jun 1999	5.68	14.3	113
28 Jun 1999	6.06	13.7	128
WP-12			
30 Jan 1999	5.90	3.5	112
15 Feb 1999	5.90	3.8	110
25 Feb 1999	5.94	2.7	73
03 Mar 1999	6.16	1.6	34
24 Mar 1999	6.11	2.1	57
15 Apr 1999	6.18	5.5	77
30 Apr 1999	8.15	8.7	76
14 May 1999	6.20	10.4	89
28 May 1999	6.35	12.8	63
14 Jun 1999	5.97	14.3	133
28 Jun 1999	---	---	---
WP-13			
30 Jan 1999	---	---	---
15 Feb 1999	---	---	---
25 Feb 1999	---	---	---
03 Mar 1999	---	---	---
24 Mar 1999	---	---	---
15 Apr 1999	---	---	---
30 Apr 1999	---	---	---
14 May 1999	---	---	---
28 May 1999	---	---	---
14 Jun 1999	---	---	---

TABLE A-2 (Continued)

Gauging Date	pH	Temperature (C)	Conductivity (umhos)
WP-14			
30 Jan 1999	5.60	4.5	75
15 Feb 1999	5.60	4.9	79
25 Feb 1999	6.67	3.2	62
03 Mar 1999	6.51	4.6	82
24 Mar 1999	6.28	2.9	54
15 Apr 1999	5.53	6.8	80
30 Apr 1999	7.31	9.1	94
14 May 1999	5.79	10.4	80
28 May 1999	6.59	13.0	76
14 Jun 1999	5.34	13.5	127
28 Jun 1999	6.23	14.3	154
WP-15			
30 Jan 1999	6.20	3.6	15
15 Feb 1999	6.10	3.6	25
25 Feb 1999	6.10	3.7	39
03 Mar 1999	9.15	4.3	58
24 Mar 1999	6.34	1.2	41
15 Apr 1999	5.91	5.6	62
30 Apr 1999	7.48	9.4	76
14 May 1999	6.04	10.7	68
28 May 1999	6.58	13.7	73
14 Jun 1999	5.67	13.1	60
28 Jun 1999	6.31	14.5	76
WP-16R			
30 Jan 1999	---	---	---
15 Feb 1999	---	---	---
25 Feb 1999	6.28	5.3	353
03 Mar 1999	6.96	9.3	413
24 Mar 1999	6.96	2.5	390
15 Apr 1999	5.77	7.4	300
30 Apr 1999	9.37	11.9	387
14 May 1999	6.21	10.6	110
28 May 1999	6.11	16.9	422
14 Jun 1999	11.28	17.8	2,546
28 Jun 1999	6.43	14.4	88
WP-17R			
30 Jan 1999	---	---	---
15 Feb 1999	---	---	---
25 Feb 1999	6.32	5.5	176
03 Mar 1999	6.63	9.1	220
24 Mar 1999	6.61	3.2	215
15 Apr 1999	6.13	6.6	154
30 Apr 1999	10.17	10.1	152
14 May 1999	6.05	10.5	85
28 May 1999	7.49	16.6	200
14 Jun 1999	10.34	16.4	269
28 Jun 1999	6.12	14.6	53

TABLE A-2 (Continued)

Gauging Date	pH	Temperature (C)	Conductivity (umhos)
WP-18R			
30 Jan 1999	---	---	---
15 Feb 1999	---	---	---
25 Feb 1999	8.70	3.4	107
03 Mar 1999	6.96	7.6	70
24 Mar 1999	6.95	5.2	60
15 Apr 1999	10.10	7.2	142
30 Apr 1999	9.16	11.7	154
14 May 1999	6.10	10.4	90
28 May 1999	6.40	17.2	177
14 Jun 1999	7.99	18.0	161
28 Jun 1999	---	---	---
WP-20			
30 Jan 1999	---	---	---
15 Feb 1999	---	---	---
25 Feb 1999	---	---	---
03 Mar 1999	---	---	---
24 Mar 1999	---	---	---
15 Apr 1999	---	---	---
WP-21			
30 Jan 1999	---	---	---
15 Feb 1999	---	---	---
25 Feb 1999	8.84	5.6	127
03 Mar 1999	6.41	8.0	137
24 Mar 1999	6.39	6.2	125
15 Apr 1999	5.28	7.3	162
30 Apr 1999	8.41	10.0	161
14 May 1999	6.52	11.6	177
28 May 1999	5.61	15.5	174
14 Jun 1999	8.07	16.2	236
28 Jun 1999	6.51	14.1	168
WP-22			
30 Jan 1999	---	---	---
15 Feb 1999	---	---	---
25 Feb 1999	10.96	4.9	456
03 Mar 1999	10.28	6.4	114
24 Mar 1999	6.50	4.2	110
15 Apr 1999	10.66	6.8	1,069
30 Apr 1999	8.29	10.5	432
14 May 1999	6.20	10.9	100
28 May 1999	8.05	18.4	249
14 Jun 1999	10.70	15.8	288
28 Jun 1999	6.08	14.3	101

Dashes (---) indicate data not available.

TABLE A-3 SUMMARY OF FIELD MEASUREMENTS OF TOTAL VOLATILE HYDROCARBONS AT WELL POINT RISERS FROM 1 JANUARY THROUGH 30 JUNE 1999 AT THE OLD NAVY FUEL FARM, NAVAL AIR STATION, BRUNSWICK, MAINE

Location	1 JAN 1999		25 FEB 1999		15 APR 1999		28 MAY 1999		14 JUN 1999	
	FID TVH (ppm)	PID TVH (ppm)	FID TVH (ppm)	PID TVH (ppm)	FID TVH (ppm)	PID TVH (ppm)	FID TVH (ppm)	PID TVH (ppm)	FID TVH (ppm)	PID TVH (ppm)
WP-11	0	0	2.0	0	1.3	0	1.0	0	0	16.8
WP-02	69.0	17.0	103.0	26.0	6.3	3.0	100.0	8.0	80.0	13.0
WP-03	93.0	0	167.0	0	0.7	0.2	5.0	0	5.3	16.4
WP-04	3.0	0	43.0	14.0	8.3	3.7	0	0	44.2	24.3
WP-05	3,250.0	375.0	78.0	8.0	35.4	3.0	0	0	0	0
WP-06	1.0	0	2.0	1.0	1.5	0	0	0	2.5	10.4
WP-07	25.0	5.0	42.0	8.0	5.7	0.6	85.0	3.0	21.4	3.0
WP-08	0	0	20.0	0	1,500.9	4.6	1,000.0	5.0	0	3.2
WP-01	0.5	0	43.0	0	3.0	0.3	3.0	0	113.0	7.6
WP-10	1,000.0	20.0	120.0	4.0	1.2	0.1	0	0	0.8	4.3
WP-22	---	---	---	---	2.0	0	0	0	760.0	1.5
WP-12	11.0	0	0	0	34.9	1.3	35.0	1.0	0	8.1
WP-13	0	0	0	0	---	---	0	0	14.7	0
WP-14	0	0	0	0	0	0	0	0	0	12.6
WP-15	0	0	0	0	0.9	0	0	0	2.0	4.7
WP-16R	---	---	0	0	36.1	0	36.0	0	0	24.2
WP-17R	---	---	0	0	2.0	0	5.0	0	0.9	0
WP-18R	---	---	1.0	0	1.8	0	150.0	0	0	23.0
WP-21	---	---	---	---	30.1	0.1	0	0	161.0	0
WP-09	0	0	0	0	1.6	0	2.0	0	0.8	0.3

NOTE: FID = Flame ionization detector; PID = Photoionization detector; TVH = Total volatile hydrocarbons.
24 March 1999 data not collected due to rain.
Dashes (---) indicate well point damaged or destroyed.

TABLE A-4 SUMMARY OF FIELD MEASUREMENTS OF METHANE, CARBON DIOXIDE, AND OXYGEN IN WELL POINT RISER HEADSPACE FROM 1 JANUARY THROUGH 30 JUNE 1999
OLD NAVY FUEL FARM, NAVAL AIR STATION, BRUNSWICK, MAINE

Location	25 FEB 1999			15 APR 1999			28 MAY 1999			14 JUN 1999		
	CH4	CO2	O2	CH4	CO2	O2	CH4	CO2	O2	CH4	CO2	O2
WP-01	0	0	20.6	0	0	20.4	0	0	20.5	0.2	0	20.7
WP-02	0	0	20.6	0	0	20.4	0	0	20.4	0.2	0	20.8
WP-03	0	0	20.6	0	0	20.5	0	0	20.5	0.2	0	20.8
WP-04	0	0	20.6	0	0	20.4	0	0	20.7	0.2	0.2	20.7
WP-05	0	0	20.6	0	0	20.4	0	0	20.6	0.2	0	20.7
WP-06	0	0	20.6	0	0	20.7	0	0	20.6	0.2	0	20.8
WP-07	0	0	20.6	0	0	20.6	0	0	20.8	0.2	0	20.8
WP-08	0	0	20.6	0	0	20.8	0	0	20.5	0.2	0	21.1
WP-09	0	0	20.5	0	0	20.6	0	0	20.6	0.2	0.1	20.8
WP-10	0	0	20.6	0	0	20.5	0	0	20.7	0.1	0.1	21.1
WP-11	0	0	20.6	0	0	20.6	0	0	20.7	0.2	0.6	20.4
WP-12	0	0	20.5	0	0	20.8	0	0	20.6	0.2	0	21.1
WP-13	0	0	20.6	---	---	---	0	0	20.7	0.2	0.1	20.8
WP-14	0	0	20.6	0	0	20.6	0	0	20.6	0.2	0	20.6
WP-15	0	0	20.5	0	0	20.6	0	0	20.6	0.1	0.2	21.0
WP-16R	0	0	20.6	0	0	20.7	0	0	20.7	0.2	0	20.8
WP-17R	0	0	20.6	0	0	20.7	0	0	20.1	0.2	0	21.3
WP-18R	0	0	20.6	0	0	20.6	0	0	20.6	0.2	0	20.7
WP-21	---	---	---	0	0	20.4	0	0	20.4	0.2	0	20.7
WP-22	---	---	---	0	0	20.6	0	0	20.6	0.2	0	21.1

NOTE: Measurements collected with a Landtec GA-90 multi-gas analyzer.
All values expressed as % air.
Dashes (---) indicate data not available.

TABLE A-5 WELL GAUGING DATA AND WATER QUALITY INDICATOR PARAMETER MEASUREMENTS COLLECTED DURING SAMPLING 14-15 JUNE 1999
OLD NAVY FUEL FARM, NAVAL AIR STATION, BRUNSWICK, MAINE

Well	Depth to Water (ft)	Water Table Elevation (ft)	pH	Temperature (C)	Conductivity (umhos)	DO (mg/L)	Redox (mV)
MW-43	---	---	---	---	---	---	---
MW-44	3.6	69.6	6.2	15.9	43	5.8	177
MW-46	5.5	65.5	7.8	14.0	192	11.3	155
MW-49	5.5	61.5	6.8	12.1	90	4.2	180
MW-51	5.7	67.5	7.0	12.6	38	8.9	171
MW-54	7.7	67.8	5.8	12.4	96	4.8	208
MW-58	6.2	63.6	7.5	11.9	67	5.7	161
MW-61R	5.8	69.8	6.1	17.3	122	7.5	190
MW-62	9.6	71.2	5.9	9.0	39	6.3	195
MW-NASB-211	7.2	68.4	5.7	12.6	124	4.0	200
MW-NASB-213	6.4	70.4	6.0	14.2	33	7.5	178
WP-01	5.6	69.2	5.6	13.9	386	11.4	166
WP-02	6.1	69.2	5.8	17.4	148	6.6	132
WP-03	4.8	69.4	5.8	14.6	40	4.1	174
WP-04	6.1	70.1	5.6	13.6	163	9.4	138
WP-05	5.8	68.8	5.6	13.9	74	4.2	146
WP-06	4.9	68.8	5.7	12.9	86	5.5	134
WP-07	5.3	68.6	5.6	15.6	207	8.1	131
WP-08	5.8	69.2	6.1	14.8	313	11.2	117
WP-09	---	---	---	---	---	---	---
WP-10	6.0	68.8	5.5	11.6	98	6.5	167
WP-11	5.7	68.4	5.7	14.3	113	6.1	130
WP-12	7.2	67.9	6.0	14.3	133	4.9	128
WP-13	---	---	---	---	---	---	---
WP-14	6.5	68.7	5.3	13.5	127	5.0	143
WP-15	6.3	68.3	5.7	13.1	60	3.9	135
WP-16R	---	---	11.3	17.8	2,546	8.5	-71
WP-17R	8.1	66.6	10.3	16.4	269	10.3	-47
WP-18R	6.8	68.0	8.0	18.0	161	12.3	58
WP-21	6.8	68.9	8.1	16.2	236	13.5	40
WP-22	6.9	69.2	10.7	15.8	288	11.5	-50

NOTE: Dashes (---) indicate data not available.

TABLE A-6 SUMMARY OF ANALYTICAL RESULTS FOR FERROUS IRON AND MANGANESE CONCENTRATIONS IN GROUND-WATER SAMPLES COLLECTED 14 JUNE 1999, OLD NAVY FUEL FARM, NAVAL AIR STATION, BRUNSWICK, MAINE

Well	Iron (mg/L)[a]	Manganese (mg/L)
WP-01	12	1.1
WP-02	3	0
WP-03	1	0.1
WP-04	---	---
WP-05	---	---
WP-06	2	0.4
WP-07	6	0.3
WP-08	---	---
WP-09	---	---
WP-10	6	1
WP-11	---	---
WP-12	---	---
WP-13	---	---
WP-14	---	---
WP-15	---	---
WP-16R	1	0
WP-17R	4	0.4
WP-18R	---	---
WP-21	29	0.2
WP-22	1	0

[a] All iron samples diluted 100X. Missing data (---) due to insufficient water in wells.

TABLE A-7 SUMMARY OF ANALYTICAL RESULTS FOR GROUND-WATER SAMPLES COLLECTED 15-16 JUNE 1999, OLD NAVY FUEL FARM, NAVAL AIR STATION, BRUNSWICK, MAINE

Compound	Sample Location											MEDEP Cleanup Goal	MEDEP Drinking Water Guidelines
	WP-01	WP-02	WP-03	WP-06	WP-07	WP-10	WP-16R	WP-17R	WP-21	WP-21-DUP	WP-22		
VOLATILE ORGANIC COMPUNDS BY EPA METHOD 602 (µg/L)													
Benzene	(<1U)	(<1U)	(<1U)	(<1U)	(<1U)	29	8	45	35	30	150	5	5
Toluene	2	12	(<1U)	(<1U)	21	2	45	47	85	67	410	---	1,400
Ethylbenzene	(<1U)	(<1U)	(<1U)	(<1U)	(<1U)	16	7	(<10U)	120	100	67	---	700
Xylenes, total	(<2U)	40	(<2U)	(<2U)	2	34	10	(<15U)	750	630	340	---	600
Total BTEX	2	52	0	0	23	81	69	92	827	990	967	---	---
MTBE	1	(<1U)	(<1U)	(<1U)	(<1U)	2	7	(<5U)	(<13U)	(<5U)	(<10U)	35	50
TPH BY DHS-HETL METHOD 4.2.17 (µg/L)													
TPH-GRO	78	1,400	<10U)	26	460	670	500	900	4,600	4,800	2,600	50	50
TPH BY DHS-HETL METHOD 4.1.25 (µg/L)													
TPH-DRO	970	9,600	140	180	700	500	500	3,600	1,500	1,400	9,400	50	50

1. MEDEP cleanup goals taken from Procedural Guidelines for Establishing Standards for the Remediation of Oil Contaminated Soil and Ground Water in Maine, MEDEP (1995). Dashes indicate no goal established for this compound.
2. Toluene, ethylbenzene, mp-xylene, and o-xylene each reported at 2 µg/L in the trip blank. Toluene and mp-xylene reported at 2 µg/L in the rinsate blank. Reported concentrations for toluene, ethylbenzene, and total xylenes @ 2 µg/L not included in total BTEX calculation.
3. MTBE MEDEP Cleanup Goal taken from Maine State Legislature Office of Policy and Legal Analysis memo dated 3 June 1998 addressed to members of the Natural Resources Committee and Health and Human Services Committee.
4. Well points WP-13, WP-19, and WP-20 were destroyed; thus, no samples were collected.
5. Well point 18R and monitoring well MW-NASB-043 were dry and could not be sampled.
6. Monitoring well MW-56R was obstructed and could not be sampled.

NOTE:
MEDEP = Maine Department of Environmental Protection.
EPA = U.S. Environmental Protection Agency.
U = Not detected. Sample quantitation limits are shown as (<___U)
BTEX = Benzene, toluene, ethylbenzene, and total xylenes.
MTBE = Methyl tertiary-butyl ether.
TPH = Total petroleum hydrocarbons.
GRO = Gasoline range organics:
DRO = Diesel range organics.
DHS-HETL = State of Maine Department of Human Services Health and Environmental Testing Laboratory.

TABLE A-8 SUMMARY OF ANALYTICAL RESULTS FOR GROUND-WATER SAMPLES COLLECTED FROM 10 JUNE 1996 TO 17 JUNE 1999, OLD NAVY FUEL FARM, NAVAL AIR STATION, BRUNSWICK, MAINE

Date	Parameter						
	Benzene	Toluene	Ethylbenzene	Total Xylenes	Total BTEX	TPH GRO	TPH DRO
MW-44							
10 Jul 1996	(<1U)	(<1U)	(<1U)	(<1U)	ND	(<50U)	(<100U)
07 Aug 1996	(<1U)	3	(<1U)	1	4	16	(<50U)
04 Dec 1996	(<1U)	(<1U)	(<1U)	(<1U)	ND	110	290
24 Jun 1997	(<1U)	(<1U)	(<1U)	(<1U)	ND	(<25U)	56
10 Dec 1997	(<1U)	(<1U)	(<1U)	(<1U)	ND	(<10U)	84
17 Jun 1998	(<1U)	(<1U)	(<1U)	(<1U)	ND	(<10U)	110
08 Dec 1998	(<1U)	2	2	2	6	14	87
16 Jun 1999	(<1U)	(<1U)	(<1U)	(<2U)	ND	(<10U)	(<50U)
MW-44-DUP							
08 Aug 1996	(<1U)	3	(<1U)	2	5	(<10U)	(<50U)
MW-46							
08 Dec 1998	(<1U)	3	(<1U)	4	7	19	99
15 Jun 1999	(<1U)	(<1U)	(<1U)	(<2U)	ND	(<10U)	76
MW-49							
10 Jul 1996	(<1U)	(<1U)	(<1U)	(<1U)	ND	(<50U)	(<50U)
04 Dec 1996	(<1U)	(<1U)	(<1U)	(<1U)	ND	(<10U)	110
24 Jun 1997	(<1U)	2	(<1U)	(<1U)	2	(<25U)	140
10 Dec 1997	(<1U)	2	(<1U)	(<1U)	2	(<10U)	190
17 Jun 1998	(<1U)	(<1U)	(<1U)	(<1U)	ND	(<10U)	130
08 Dec 1998	(<1U)	3	(<1U)	4	7	16	150
15 Jun 1999	(<1U)	4	(<1U)	(<2U)	4	(<10U)	86
MW-49-DUP							
04 Dec 1996	(<1U)	(<1U)	2	(<1U)		(<10U)	150
MW-51							
10 Jul 1996	(<1U)	(<1U)	(<1U)	(<1U)	ND	(<50U)	(<100U)
07 Aug 1996	(<1U)	1	(<1U)	(<1U)	1	14	(<50U)
04 Dec 1996	(<1U)	(<1U)	(<1U)	(<1U)	ND	(<10U)	(<50U)
24 Jun 1997	(<1U)	(<1U)	(<1U)	(<1U)	ND	(<25U)	52
10 Dec 1997	(<1U)	(<1U)	(<1U)	(<1U)	ND	(<10U)	93
17 Jun 1998	(<1U)	1	(<1U)	1	2	21	64
08 Dec 1998	(<1U)	3	(<1U)	2	5	14	80
15 Jun 1999	(<1U)	(<1U)	(<1U)	(<2U)	ND	(<10U)	(<50U)
MW-54							
10 Jul 1996	(<1U)	(<1U)	(<1U)	(<1U)	ND	(<50U)	(<100U)
04 Dec 1996	(<1U)	1	1	(<1U)	2	15	260
24 Jun 1997	(<1U)	(<1U)	(<1U)	(<1U)	ND	(<25U)	230
10 Dec 1997	1	(<1U)	(<1U)	(<1U)	1	150	310
17 Jun 1998	(<1U)	(<1U)	(<1U)	2	2	32	160
08 Dec 1998	3	3	2	4	12	18	160
16 Jun 1999		(<1U)	(<1U)	(<2U)	ND	(<10U)	67
MW-54-DUP							
16 Jun 1999	(<1U)	(<1U)	(<1U)	(<2U)	ND	(<10U)	82
MW-56							
10 Jul 1996	(<1U)	2	(<1U)	1	3	44	56
07 Aug 1996	(<1U)	2	(<1U)	1		44	56

TABLE A-8 (Continued)

Date	Parameter						
	Benzene	Toluene	Ethylbenzene	Total Xylenes	Total BTEX	TPH GRO	TPH DRO
MW-58							
10 Jul 1996	(<1U)	(<1U)		(<1U)	ND	(<50U)	(<100U)
04 Dec 1996	(<1U)	(<1U)	(<1U)	(<1U)	ND	(<10U)	230
24 Jun 1997	(<1U)	(<1U)	(<1U)	(<1U)	ND	(<25U)	100
10 Dec 1997	(<1U)	(<1U)	(<1U)	(<1U)	ND	(<10U)	98
17 Jun 1998	(<1U)	(<1U)	1	1	2	(<10U)	(<50U)
08 Dec 1998	(<1U)	3	(<1U)	5	8	20	75
15 Jun 1999	(<1U)	(<1U)	(<1U)	(<2U)	ND	(<10U)	(<50U)
MW-61R							
24 Jun 1997	(<1U)	1	(<1U)	(<1U)	1	32	320
10 Dec 1997	(<1U)	(<1U)	(<1U)	(<1U)	ND	75	210
17 Jun 1998	(<1U)	(<1U)	(<1U)	(<1U)	ND	(<10U)	86
08 Dec 1998	3	2	2	3	10	36	180
16 Jun 1999	(<1U)	1	(<1U)	(<2U)	1	23	120
MW-62							
10 Jul 1996	(<1U)	(<1U)	(<1U)	(<1U)	ND	(<50U)	(<100U)
04 Dec 1996	(<1U)	(<1U)	(<1U)	(<1U)	ND	11	52
24 Jun 1997	(<1U)	(<1U)	(<1U)	(<1U)	ND	(<25U)	58
10 Dec 1997	(<1U)	(<1U)	(<1U)	(<1U)	ND	(<10U)	64
17 Jun 1998	(<1U)	(<1U)	(<1U)	(<1U)	ND	(<10U)	76
08 Dec 1998	(<1U)	2	(<1U)	4	6	13	56
15 Jun 1999	(<1U)	(<1U)	(<1U)	(<2U)	ND	(<10U)	(<50U)
MW-I							
04 Dec 1996	(<1U)	2	(<1U)	(<1U)		100	66
MW-J							
04 Dec 1996	1,100D	27,000D	250	2,570D		30,000	6,700
MW-NASB-211							
24 Jun 1997	510	20,000D	200	950	21,660D	24,000	3,000D
10 Dec 1997	110	5,800D	56	335	6,301D	19,000D	1,700
17 Jun 1998	(<1U)	2,500D	58	190	2,748D	4,400	900
08 Dec 1998	7	11,000D	450D	1,290D	12,747	15,000D	960
MW-NASB-211-DUP							
08 Dec 1998	7	10,000D	480D	1,300D	11,787	2,190	1,000
MW-NASB-213							
24 Jun 1997	(<1U)	(<1U)	(<1U)	(<1U)	ND	(<25U)	180
10 Dec 1997	(<1U)	(<1U)	(<1U)	(<1U)	ND	52	79
17 Jun 1998	(<1U)	(<1U)	(<1U)	(<1U)	ND	(<10U)	61
08 Dec 1998	(<1U)	3	(<1U)	3	6	13	(<50U)
16 Jun 1999	(<1U)	(<1U)	(<1U)	(<2U)	ND	(<10U)	(<50U)
WP-01							
07 Aug 1996	(<1U)	2	(<1U)	12	14	77	1,000
04 Dec 1996	(<1U)	(<1U)	(<1U)	2	2	3,300	750
24 Jun 1997	(<1U)	(<1U)	(<1U)	(<1U)	ND	260	1,800
10 Dec 1997	(<1U)	(<1U)	(<1U)	1	1	140	640
17 Jun 1998	(<1U)	1	(<1U)	5	6	45	320
08 Dec 1998	(<1U)	2	(<1U)	2	4	19	690
17 Jun 1999	(<1U)	2	(<1U)	(<2U)	2	78	970
WP-01-DUP							
08 Aug 1996	(<1U)	2	(<1U)	16	18	54	1,100

TABLE A-8 (Continued)

Date	Parameter						
	Benzene	Toluene	Ethylbenzene	Total Xylenes	Total BTEX	TPH GRO	TPH DRO
WP-02							
07 Aug 1996	6	34	94	490	624	4,200	16,000
24 Jun 1997	3	13	81	450	547	4,200	23,000D
10 Dec 1997	(<1U)	(<1U)	2	12	14	18,000D	5,900D
17 Jun 1998	(<1U)	(<1U)	2	14	16	2,400E	4,700D
08 Dec 1998	3	2	3	5	13	8,500D	5,300D
18 Jun 1999	(<1U)	12	(<1U)	40	52	1,400	9,600
WP-02-DUP							
08 Dec 1998	5	8	2	7	22	13,000D	7,400D
WP-03							
07 Aug 1996	17	72	1	3	93	140	410
04 Dec 1996	(<1U)	3	(<1U)	5	8	4,100	670
24 Jun 1997	(<1U)	(<1U)	(<1U)	(<1U)	ND	130	440
10 Dec 1997	(<1U)	(<1U)	(<1U)	(<1U)	ND	200	170
17 Jun 1998	(<1U)	2	(<1U)	3	5	40	150
08 Dec 1998	(<1U)	2	(<1U)	3	5	63	150
17 Jun 1999	(<1U)	(<1U)	(<1U)	(<2U)	ND	(<10U)	140
WP-03-DUP							
04 Dec 1996	(<1U)	1	(<1U)	5		160	400
WP-04							
07 Aug 1996	2	4	8	16	28	890	1,300
24 Jun 1997	3	10	94	530	637	16,000	2,000,000D
10 Dec 1997	(<1U)	(<1U)	(<1U)	(<1U)	ND	6,800D	49,000D
17 Jun 1998	(<1U)	3	(<1U)	1	4	180	2,000
08 Dec 1998	3	3	2	4	12	610	5,000D
WP-05							
07 Aug 1996	12	640D	580D	4,000D	5,230D	9,000	1,000
04 Dec 1996	17	240	350	2,420	3,027	4,800	(<50U)
24 Jun 1997	55	1,700D	1,100D	8,500D	11,355D	15,000	2,700D
10 Dec 1997	1	10	6	178	195	890	760
17 Jun 1998	52	710D	890D	6,700D	8,352D	15,000E	1,600
08 Dec 1998	32	370D	190	3,900D	4,492	14,000D	2,500D
WP-06							
07 Aug 1996	(<1U)	4	(<1U)	4	8	31	150
04 Dec 1996	(<1U)	3	(<1U)	1	4	20	(<50U)
24 Jun 1997	(<1U)	(<1U)	(<1U)	(<1U)	ND	210	450
10 Dec 1997	(<1U)	(<1U)	(<1U)	1	1	200	220
17 Jun 1998	(<1U)	1	(<1U)	2	3	150	360
08 Dec 1998	(<1U)	2	2	3	7	17	250
17 Jun 1999	(<1U)	(<1U)	(<1U)	(<2U)	ND	26	180
WP-07							
07 Aug 1996	(<1U)	12	6	49	67	2,500	680
24 Jun 1997	(<1U)	(<1U)	(<1U)	(<1U)	ND	4,000	1,200
10 Dec 1997	(<1U)	(<1U)	(<1U)	(<1U)	ND	11,000	1,300
17 Jun 1998	(<1U)	(<1U)	14	37	51	1,800	660
08 Dec 1998	(<1U)	3	2	8	13	750	650
17 Jun 1999	(<1U)	21	(<1U)	2	23	460	700
WP-07-DUP							
08 Dec 1998	3	27	3	7	40	1,100D	800

TABLE A-8 (Continued)

Date	Parameter						
	Benzene	Toluene	Ethylbenzene	Total Xylenes	Total BTEX	TPH GRO	TPH DRO
WP-08							
07 Aug 1996	15	6	2	6	29	220	480
04 Dec 1996	(<1U)	(<1U)	(<1U)	1	1	270	150
24 Jun 1997	(<1U)	(<1U)	(<1U)	(<1U)	ND	1,600	2,400D
10 Dec 1997	(<1U)	(<1U)	(<1U)	(<1U)	ND	560	730
17 Jun 1998	(<1U)	(<1U)	(<1U)	1	1	70	66
08 Dec 1998	5	27	2	4	38	140	370
WP-09							
07 Aug 1996	1	5	1	9	16	93	89
04 Dec 1996	(<1U)	(<1U)	(<1U)	1	1	730	(<50U)
24 Jun 1997	(<1U)	(<1U)	(<1U)	(<1U)	ND	110	NA
17 Jun 1998	(<1U)	1	(<1U)	1	2	49	150
08 Dec 1998	(<1U)	2	(<1U)	3	5	23	
WP-10							
07 Aug 1996	31	46	17	72	166	550	420
04 Dec 1996	(<1U)	4	2	14	20	130	(<50U)
24 Jun 1997	34	26	9	41	110	310	470
10 Dec 1997	(<1U)	(<1U)	(<1U)	(<1U)	ND	25	240
17 Jun 1998	(<1U)	(<1U)	(<1U)	(<1U)	ND	78	310
08 Dec 1998	(<U)	(<U)	(<U)	(<U)	5	(<U)	(<U)
17 Jun 1999	29	2	16	34	81	670	500
WP-11							
07 Aug 1996	78	3,400D	170	750	4,398D	5,500	3,600
04 Dec 1996	10	220	2	38	270	3,400	220
24 Jun 1997	320	6,700D	72	335	7,427D	9,100	12,000D
10 Dec 1997	(<1U)	5	(<1U)	2	7	490	1,200
17 Jun 1998	(<1U)	(<1U)	(<1U)	1	1	180	420
08 Dec 1998	11	46	2	4	63	56	300
WP-11-DUP							
08 Aug 1996	75	3,000D	220	980	4,275		3,000
WP-12							
04 Dec 1996	(<1U)	190	9	392	591	870	390
17 Jun 1998	(<1U)	2	(<1U)	2	4	(<10U)	550
08 Dec 1998	3	4	2	1	10	28D	320
WP-13							
07 Aug 1996	15	380	56	315	766	2,200	580
04 Dec 1996	(<1U)	(<1U)	(<1U)	57	57	950	3,100
24 Jun 1997	12	270	3	15	300	430	290
10 Dec 1997	(<1U)	(<1U)	(<1U)	(<1U)	ND	470	NA
WP-14							
07 Aug 1996	(<1U)	10	(<1U)	5	15	34	140
04 Dec 1996	(<1U)	(<1U)	(<1U)	(<1U)	ND	15	62
24 Jun 1997	(<1U)	1	(<1U)	(<1U)	1	(<25U)	280
10 Dec 1997	(<1U)	(<1U)	(<1U)	(<1U)	ND	38	280
17 Jun 1998	(<1U)	(<1U)	(<1U)	(<1U)	ND	(<10U)	280
08 Dec 1998	(<1U)	2	(<1U)	3	5	(<10U)	140
WP-15							
07 Aug 1996	6	19	2	8	34	47	500
04 Dec 1996	(<1U)	(<1U)	(<1U)	(<1U)	ND	(<10U)	66
24 Jun 1997	(<1U)	1	(<1U)	(<1U)	1	160	570
10 Dec 1997	(<1U)	(<1U)	(<1U)	(<1U)	ND	160	570
17 Jun 1998	(<1U)	2	(<1U)	3	5	43	340
08 Dec 1998	(<1U)	2	(<1U)	3	5	51	510

TABLE A-8 (Continued)

Date	Parameter						
	Benzene	Toluene	Ethylbenzene	Total Xylenes	Total BTEX	TPH GRO	TPH DRO
WP-16							
04 Dec 1996	(<1U)	1	(<1U)	1	3	11	(<50U)
WP-16R							
17 Jun 1998	(<1U)	2	(<1U)	2	4	85	630
08 Dec 1998	3	3	2	4	12	30D	
17 Jun 1999	8	45	7	10	69	500	500
WP-17R							
17 Jun 1998	42	100	7	40	189	1,900E	2,500D
08 Dec 1998	17	36	9	56	118	2,400	18,000D
17 Jun 1999	45	47	(<10U)	(<15U)	92	900	3,600
WP-18							
07 Aug 1996	(<1U)	8	(<1U)	4	12	22	75
04 Dec 1996	(<1U)	2	(<1U)	2	3	35	(<50U)
WP-18R							
10 Dec 1997	(<1U)	(<1U)	(<1U)	(<1U)	ND	(<10U)	330
17 Jun 1998	(<1U)	2	(<1U)	1	3	24	100
WP-19							
07 Aug 1996	(<1U)	3	(<1U)	1	5	260	100
04 Dec 1996	(<1U)	1	(<1U)	3	4	1,100	210
24 Jun 1997	(<1U)	4	(<1U)	(<1U)	4	1,000	400
WP-20							
07 Aug 1996	1	7	1	6	16	320	73
04 Dec 1996	(<1U)	1	(<1U)	4	5	14	(<50U)
24 Jun 1997	(<1U)	2	(<1U)	(<1U)	2	(<25U)	370
10 Dec 1997	(<1U)	(<1U)	(<1U)	(<1U)	ND	(<10U)	200
WP-21							
10 Dec 1997	68	90	120	540	818	8,500D	3,700D
17 Jun 1998	41	30	96	380	547	3,800E	1,200
08 Dec 1998	11	75	150D	820D	1,056	2,900D	2,700D
18 Jun 1999	35	85	120	750	827	4,600	1,500
WP-21-DUP							
18 Jun 1999	30	67	100	630	990	4,800	1,400
WP-22							
10 Dec 1997	52	180	12	138	382	3,400D	5,200D
17 Jun 1998	150	570D	110	450	1,280D	3,900E	10,000D
08 Dec 1998	91	450D	71	532D	1,144	8,900D	16,000D
17 Jun 1999	150	410	67	340	967	2,600	9,400

BTEX = Benzene, toluene, ethylbenzene, and total xylenes.
MTBE = Methyl tertiary-butyl ether. TPH = Total petroleum hydrocarbons
GRO = Gasoline range organics; DRO = Diesel range organics.
(<__U) = Compound not detected above method detection limit shown. Results reported in ug/L.
ND = Not detected, D = Indicates compound identified at secondary dilution factor.
Values for August and December 1996 rounded to nearest integer.
Total BTEX calculations for 8-9 December 1998 analytical results are likely over-represented due to detection of toluene, ethylbenzene, and total xylenes in the trip and rinsate blanks.
Biosparging system was inactive during 8-9 December 1998 sampling event.
Results reported in µg/L.

TABLE A-9 SUMMARY OF ANALYTICAL RESULTS FOR SOIL VAPOR EXTRACTION SAMPLES COLLECTED FROM 1 JANUARY 1999 TO 1 JULY 1999, OLD NAVY FUEL FARM, NAVAL AIR STATION, BRUNSWICK, MAINE

Date	Parameter							
	Benzene	Toluene	Ethylbenzene	Total Xylenes	Total BTEX	MTBE	TPH GRO	TPH DRO
10 Mar 1999	(<0.5U)	1.2	(<1.0U)	(<1.5U)	1.2	--	100	(<110U)
19 Mar 1999	(<0.5U)	(<1.0U)	(<1.0U)	(<1.5U)	ND	--	100	110
01 Apr 1999	(<25U)	1,100	(<50U)	130	1,230	--	1,100	450
03 May 1999	(<0.5U)	3.4	(<1.0U)	(<1.5U)	3.4	--	27	310
01 Jun 1999	(<0.5U)	3.0	1.1	11	15	--	88	660
01 Jul 1999	(<0.5U)	(<1.0U)	(<1.0U)	(<1.5U)	ND	--	21	(<50U)

NOTE: BTEX = Benzene, toluene, ethylbenzene, and total xylenes.
MTBE = Methyl tertiary-butyl ether.
TPH = Total petroleum hydrocarbons
GRO = Gasoline range organics
DRO = Diesel range organics.
(<__U) = Compound not detected above method detection limit shown.
ND = Not detected
Results reported in µg/L.

TABLE A-10 SUMMARY OF SOIL VAPOR EXTRACTION SYSTEM PERFORMANCE DATA RECORDED FROM APRIL THROUGH JUNE 1999 AT THE OLD NAVY FUEL FARM, NAVAL AIR STATION, BRUNSWICK, MAINE

Sample Date	System Status	Total Volatile Hydrocarbons (ppmv)[1]	Flow Rate (cfm)	Daily Total Volatile Hydrocarbon Removal Rate[2] (lb/day)
SVE Composite Intake				
15 Apr 19	SVE/AAS	6	700	1.5
30 Apr 19	SVE/AAS	14	700	3.5
14 May 19	SVE/AAS	16	700	4.0
28 May 19	SVE/AAS	22	700	5.5
14 Jun 19	SVE/AAS	36	700	9.1
28 Jun 19	SVE/AAS	4	700	1.0
SVE Composite Emissions				
15 Apr 19	SVE/AAS	16	1,500	8.6
28 May 19	SVE/AAS	55	1,500	29.7
14 Jun 19	SVE/AAS	63	1,500	34.0

1. Based on measurements taken with photoionization detector. Photoionization detector measurements considered a conservative approximation of total volatile hydrocarbon concentrations at sample location due to instrument response limitations.
2. Loading rate calculated using formula provided by EPA (1989): ER = Q x C x MW x 1.58x10-7 x 24, where:

ER = Emissions rate (lb/day)
Q = Flow rate, cubic feet per minute (cfm)
C = Total volatile hydrocarbon concentration in influent, parts per million by volume (ppmv)
MW = Molecular weight (average) of vapor phase weathered gasoline (92.14 g/mole).

NOTE: AAS = active air sparging.
SVE = soil vapor extraction.

Appendix B

Field Record of Water Quality Analysis Forms

EA Engineering, Science, and Technology

FIELD RECORD OF WATER QUALITY PARAMETER ANALYSIS

Biosparging System, Old Navy Fuel Farm, Naval Air Station, Brunswick Maine

EA Personnel: BCB, MC	Date: 1/30/99	Time: 0830
Weather: SUNNY 6°F	Equipment: YSI 600XL, INTERFACE PROBE	

FOXBORO TVA 1000A

Location	Depth to Water (ft)	'Depth to Product (ft)	pH	Temperature (°C)	Dissolved Oxygen (mg/L)	Conductivity (μhmos)	Redox (mV)
WP-1	5.75	—	6.0	4.2	4.5	297	338
WP-2	5.57	—	6.2	3.3	4.0	108	300
WP-3	3.93	—	6.0	5.0	3.8	39	281
WP-4	5.10		6.4	3.9	5.6	20	279
WP-5	5.27	—	5.7	5.2	4.2	64	341
WP-6	4.30	—	6.2	4.0	2.7	24	265
WP-7	4.70		5.9	3.5	3.0	171	282
WP-8	4.68	—	6.0	3.6	3.9	160	257
WP-9	7.0	—	INSUFFICIENT	WATER			
WP-10	~~4.10~~ 5.10	—	6.2	5.8	5.6	92	315
WP-11	5.05	—	6.0	4.0	3.5	39	328
WP-12	6.15	—	5.9	3.5	3.1	112	318
WP-13	WATER	IN WELL	FROZEN				
WP-14	5.50	—	5.6	4.5	4.0	75	326
WP-15	5.43	—	6.2	3.6	4.1	15	314
WP-16R				FROZEN	(RH) AS PER B. BOOZE		
WP-17R							
WP-18R							
WP-20							
WP-21							
WP-22							

EA 5120 0794-7

EA Engineering, Science, and Technology

FIELD RECORD OF WATER QUALITY PARAMETER ANALYSIS

Biosparging System, Old Navy Fuel Farm, Naval Air Station, Brunswick Maine

EA Personnel:	BCB, MC	Date: 1/30/99	Time: 0830
Weather:	SUNNY 6°F	Equipment: YSI 600XL, INTERFACE PROBE	

FOXBORO TVA 1000A

Location	Depth to Water (ft)	Depth to Product (ft)	pH	Temperature (°C)	Dissolved Oxygen (mg/L)	Conductivity (μhmos)	Redox (mV)
54	5.57	–	7.3	7	4.5	60	332
61R	5.00	–	6.4	7.1	5.5	56	359
62	8.05	–	6.3	6.1	4.8	61	356
44	3.05	–	6.2	5.7	3.9	66	277
211	6.07	–	5.8	4.6	3.9	176	323
213	4.55	–	6.2	5.0	6.0	40	293
46	4.30	–	5.9	6.7	4.8	247	325
58	5.89	–	6.1	6.6	4.4	51	324
49	4.60	–	6.1	6.2	3.7	80	322
51	4.10	–	6.0	4.0	3.7	54	307
43	LOCK	D.24					

Comments:

EA Engineering, Science, and Technology

FIELD RECORD OF WATER QUALITY PARAMETER ANALYSIS

Biosparging System, Old Navy Fuel Farm, Naval Air Station, Brunswick Maine

EA Personnel: BCB	Date: 2/15/99	Time: 1300
Weather: SUNNY 25°F	Equipment: YSI 600XL, INTERFACE PROBE	

Location	Depth to Water (ft)	'Depth to Product (ft)	pH	Temperature (°C)	Dissolved Oxygen (mg/L)	Conductivity (μhmos)	Redox (mV)
WP-1	4.37	—	6.1	4.5	4.8	312	345
WP-2	5.25	—	6.2	3.5	4.5	115	310
WP-3	3.82	—	6.0	5.1	4.0	25	275
WP-4	5.21	—	6.3	3.8	5.9	21	285
WP-5	5.26	—	5.6	5.3	4.8	60	335
WP-6	4.17	—	6.2	4.1	2.9	29	240
WP-7	4.57	—	5.9	3.7	3.5	179	300
WP-8	4.52	—	6.1	3.8	3.7	168	295
WP-9	7.03	—	INSUFFICIENT		WATER	—	—
WP-10	5.22	—	6.1	5.9	5.5	102	355
WP-11	5.01	—	6.1	4.5	3.2	45	340
WP-12	6.40	—	5.9	3.8	3.0	110	325
WP-13	BLOCKED	—	~~5.5~~ BCB	~~4.9~~ BCB	—	—	—
WP-14	5.75	—	5.6	4.9	4.5	79	329
WP-15	5.61	—	6.1	3.6	4.1	25	330
WP-16R				FROZEN	(RH)	AS PER	BART BOZE
WP-17R							
WP-18R							
WP-20							
WP-21							
WP-22							

EA 5120 0794-7

EA Engineering, Science, and Technology

FIELD RECORD OF WATER QUALITY PARAMETER ANALYSIS

Biosparging System, Old Navy Fuel Farm, Naval Air Station, Brunswick Maine

EA Personnel: BCB, MC	Date: 2/15/99	Time: 1300
Weather: SUNNY 25°F	Equipment: YSI 600XL, INTERFACE PROBE	

Location	Depth to Water (ft)	Depth to Product (ft)	pH	Temperature (°C)	Dissolved Oxygen (mg/L)	Conductivity (μhmos)	Redox (mV)
43	DRY	—					
211	6.48	—	6.0	4.9	4.2	190	335
213	4.71	—	6.3	5.2	6.2	55	301
54	5.90	—	7.1	7.0	4.6	70	340
44	2.78	—	6.3	5.9	3.8	69	282
61R	4.70	—	6.5	2.3	5.9	62	365
62	8.08	—	6.1	6.3	5.0	70	370
51	4.05	—	6.2	3.9	3.5	65	325
58	5.90	—	6.1	6.7	4.3	55	330
49	4.48	—	6.2	6.3	4.0	91	342
46	4.42	—	5.8	6.5	4.9	260	321

Comments:

EA 5120 0794-7

EA Engineering, Science, and Technology

FIELD RECORD OF WATER QUALITY PARAMETER ANALYSIS

Biosparging System, Old Navy Fuel Farm, Naval Air Station, Brunswick Maine

EA Personnel: BDA	Date: 2/25/99	Time:
Weather: overcast 30° NW	Equipment: YSI / oil interface	

Location	Depth to Water (ft)	Depth to Product (ft)	pH	Temperature (°C)	Dissolved Oxygen (mg/L)	Conductivity (µhmos)	Redox (mV)
WP-1	4.97	—	6.05	3.01	5.56	241	382
WP-2	5.52	—	6.01	2.99	4.55	106	370
WP-3	4.02	—	6.10	3.75	4.10	29	387
WP-4	5.25	—	6.23	2.72	3.76	63	350
WP-5	5.37	—	6.09	4.49	4.82	57	379
WP-6	4.22	—	5.90	3.38	3.55	65	363
WP-7	4.59	—	5.81	2.17	5.59	124	370
WP-8	4.56	—	6.08	3.05	4.35	252	362
(a) WP-9	7.67	—	insufficient water →				
WP-10	5.30	—	5.79	5.19	5.95	87	421
WP-11	4.99	—	5.95	2.55	12.27*	78	364
WP-12	6.50	—	5.94	2.72	6.93	73	363
WP-13	← Bent casing — Blocked →						
WP-14	5.66	—	6.64	3.15	16.11*	62	366
WP-15	4.87	—	6.10	3.67	6.43	39	357
WP-16R	7.11	—	6.28	5.34	17.58 (b)	353	363
WP-17R	7.20	—	6.32	5.52	17.13 (b)	176	361
WP-18R	6.29		8.70	3.36	20.01 (b)	107	201
WP-20	Broken →						
WP-21	5.77	—	8.84	5.58	14.73 (b)	127	186
WP-22	5.41	10.96	9.69	4.92	12.60 (b)	456	211

EA 5120 0794-7

* active sparging (heavy bubbling).

(a) - only .07" water

(b) - pumped water not in situ.

EA Engineering, Science, and Technology

FIELD RECORD OF WATER QUALITY PARAMETER ANALYSIS

Biosparging System, Old Navy Fuel Farm, Naval Air Station, Brunswick Maine

EA Personnel: B. Anderson	Date: 2/25/99	Time:
Weather: overcast, 30° snow expected	Equipment: YSI 610D - oil interface probe.	

Location	Depth to Water (ft)	Depth to Product (ft)	pH	Temperature (°C)	Dissolved Oxygen (mg/L)	Conductivity (µhmos)	Redox (mV)
58	5.96	—	7.60	7.13	5.63	54	321
49	5.70	—6.99	~~6.05~~	6.04	4.88	80	354
46	4.77	—	6.82	5.46	7.82	231	363
51	4.40	—	7.04	2.96	7.79	48	347
54	6.02	—	6.86	5.02	5.83	84	349
61R	5.07	—	6.08	2.28	4.81	77	383
62	8.25	—	6.27	6.35	4.61	65	372
44	2.95	—	6.11	3.65	3.76	62	362
211	6.12	—	5.94	3.92	6.74	124	367
213	4.99	—	6.35	5.26	10.56	34	337
43	←	DRY	→				

Comments: FF system on.

EA 5120 0794-7

EA Engineering, Science, and Technology

FIELD RECORD OF WATER QUALITY PARAMETER ANALYSIS

Biosparging System, Old Navy Fuel Farm, Naval Air Station, Brunswick Maine

EA Personnel: JG/BDA	Date: 3/3/99	Time:
Weather: WINDY, 40°F, PC	Equipment: YSI 610MD	

Location	Depth to Water (ft)	Depth to Product (ft)	pH	Temperature (°C)	Dissolved Oxygen (mg/L)	Conductivity (μhmos)	Redox (mV)
WP-1	3.71	—	BLOCKED →				
WP-2	4.42	—	6.58	1.89	13.24	56	205
WP-3	3.50	—	6.40	4.53	4.29	31	274
WP-4	4.18	—	6.16	3.39	11.43	54	280
WP-5	3.92	—	6.54	5.27	3.93	47	269
WP-6	3.83	—	6.21	4.11	4.08	71	285
WP-7	4.24	—	6.06	3.29	3.89	127	296
WP-8	3.60	—	6.14	2.66	8.17	69	283
WP-9	6.64	—	6.02	4.17	12.04	122	284
WP-10	4.53	—	6.08	5.43	8.95	81	241
WP-11	4.78	—	6.00	3.78	7.75	94	295
WP-12	5.28	—	6.16	1.58	9.56	34	277
WP-13	BLOCKED ←						→
WP-14	5.44	—	6.51	4.64	6.83	82	202
WP-15	5.40	—	9.15	4.25	4.17	58	135
WP-16R	6.96	—	6.96	9.28	8.70	413	168
WP-17R	6.39	—	6.63	9.12	10.09	220	184
WP-18R	5.44	—	6.96	7.62	15.69	70	178
WP-20	DESTROYED →						
WP-21	5.72	—	6.41	8.00	10.10	131	212
WP-22	5.05	—	10.28	6.31	5.68	714	100.4

EA 5120 0794-7

EA Engineering, Science, and Technology

FIELD RECORD OF WATER QUALITY PARAMETER ANALYSIS

Biosparging System, Old Navy Fuel Farm, Naval Air Station, Brunswick Maine

EA Personnel: JG / BDA	Date: 3/8/99	Time:
Weather: WINDY / 40°F / PC	Equipment: YSI 610MD	

Location	Depth to Water (ft)	Depth to Product (ft)	pH	Temperature (°C)	Dissolved Oxygen (mg/L)	Conductivity (μhmos)	Redox (mV)
MW 46	4.08	—	7.07	5.62	4.70	226	254
58	2.82	—	7.28	6.72	4.04	52	236
49	5.14	—	6.53	5.95	2.56	82	261
51	3.51	—	6.97	3.31	3.91	43	255
43	4.82	—	6.96	2.36	7.55	28	252
62	7.79	—	6.83	7.72	4.12	66	258
62R	3.84	—	6.73	3.29	3.37	83	269
	~~3.71~~ x	—					
44	2.11	—	6.53	2.08	5.36	61	273
211	7.97	—	5.98	4.77	7.43	131	293
213	4.17	—	6.47	4.13	13.58	21	258
54	5.20	—	5.84	5.59	5.58	74	246

Comments:

EA Engineering, Science, and Technology

FIELD RECORD OF WATER QUALITY PARAMETER ANALYSIS

Biosparging System, Old Navy Fuel Farm, Naval Air Station, Brunswick Maine

EA Personnel: BCB	Date: 3/24/99	Time: 1300
Weather: 45°F, RAINING	Equipment: YSI, INTERFACE PROBE	

Location	Depth to Water (ft)	Depth to Product (ft)	pH	Temperature (°C)	Dissolved Oxygen (mg/L)	Conductivity (μhmos)	Redox (mV)
WP-1	3.39	–	6.67	0.74	9.0	196	304
WP-2	4.47	–	6.75	2.04	6.0	80	294
WP-3	3.10	–	6.57	1.23	8.0	30	300
WP-4	3.37	–	6.34	3.06	9.4	44	298
WP-5	4.56	–	6.91	4.28	7.00	61	288
WP-6	3.33	–	6.35	0.85	6.3	41	301
WP-7	3.40	–	6.30	0.73	8.1	86	309
WP-8	3.57	–	6.13	2.43	7.4	92	311
WP-9	4.56	–	6.34	3.30	13.0	54	298
WP-10	3.57	–	7.38	1.97	7.81	33	269
WP-11	4.05	–	6.28	1.00	7.0	80	310
WP-12	5.00	–	6.11	2.1	7.3	57	309
WP-13	2.83	COULDN'T TAKE YSI READINGS; BLOCKED					
WP-14	4.36	–	6.28	2.89	12.5	54	301
WP-15	4.30	–	6.74	1.18	8.6	41	312
WP-16R	5.21	–	6.96	2.50	8.2	390	165
WP-17R	5.25	–	6.61	3.20	9.10	215	153
WP-18R	4.21	–	6.95	5.20	12.2	60	160
WP-20	DESTROYED						
WP-21	4.65	–	6.39	6.21	9.5	125	210
WP-22	4.65	–	6.5	4.21	4.5	110	115

EA 5120 0794-7

EA Engineering, Science, and Technology

FIELD RECORD OF WATER QUALITY PARAMETER ANALYSIS

Biosparging System, Old Navy Fuel Farm, Naval Air Station, Brunswick Maine

EA Personnel: BCB	Date: 3/24/99	Time: 1300
Weather: 45°F RAINING	Equipment: YSI, INTERFACE PROBE	

Location	Depth to Water (ft)	Depth to Product (ft)	pH	Temperature (°C)	Dissolved Oxygen (mg/L)	Conductivity (μhmos)	Redox (mV)
MW-46	3.38	--	6.33	2.49	9.0	134	308
58	5.50	—	6.1	6.5	5.2	52	324
49	5.10	—	6.40	2.67	10.90	56	298
51	3.65	—	6.58	2.09	10.6	25	291
43	5.43	—	6.69	1.69	12.2	12	286
62	7.84	—	6.95	6.84	6.4	63	280
61R	3.56	—	6.94	1.7	9.9	73	290
44	2.05	—	6.70	1.6	5.1	41	288
211	5.07	—	6.17	2.0	9.4	134	312
213	4.12	—	6.64	4.5	13	21	283
54	4.25	—	9.56	3.9	9.98	50	254

Comments:

EA 5120.0794-7

EA Engineering, Science, and Technology

FIELD RECORD OF WATER QUALITY PARAMETER ANALYSIS

Biosparging System, Old Navy Fuel Farm, Naval Air Station, Brunswick Maine

EA Personnel: KS/JG	Date: 4/15/99	Time:
Weather: Cloudy, Calm, 50°	Equipment: YSI and Slope Indicator	

	Location	Depth to Water (ft)	'Depth to Product (ft)	pH	Temperature (°C)	Dissolved Oxygen (mg/L)	Conductivity (μhmos)	Redox (mV)
	WP-1	4.55	—	5.40	6.22	10.47	243	383
	WP-2	5.27	—	5.73	5.95	7.43	212	363
	WP-3	4.16	—	6.14	5.75	8.71	33	344
	WP-4	5.08	—	5.89	6.28	9.83	103	354
	WP-5	5.38	—	5.73	6.08	12.41	61	371
	WP-6	4.53	—	6.15	4.87	9.37	45	287
	WP-7	5.02	—	5.76	5.61	11.39	190	295
	WP-8	6.28	—	5.90	5.65	10.99	225	306
	WP-9	5.49	—	6.18	6.47	11.77	94	322
	WP-10	5.09	—	5.43	5.84	6.38	94	403
	WP-11	5.44	—	5.86	5.31	7.06	79	281
	WP-12	6.38	—	6.18	5.51	9.06	77	302
	WP-13							
	WP-14	5.91	—	5.53	6.76	7.21	80	250
	WP-15	5.86	—	5.91	5.56	9.69	62	267
P	WP-16R	6.54	—	5.77	7.39	10.88	300	327
P	WP-17R	7.01	—	6.13	6.60	7.94	154	324
P	WP-18R	5.74	—	10.10	7.24	10.34	142	125
	~~WP-20~~ Destroyed							
P	WP-21	6.15	—	5.28	7.27	8.43	162	398
	WP-22	6.72	—	10.66	6.80	5.05	1069	107

EA 5120 0794-7

EA Engineering, Science, and Technology

FIELD RECORD OF WATER QUALITY PARAMETER ANALYSIS

Biosparging System, Old Navy Fuel Farm, Naval Air Station, Brunswick Maine

EA Personnel: KS/JG	Date: 4/15/99	Time: 1035-
Weather: Cloudy, Calm, 45°F	Equipment: YSI and Slope Indicator	

Location	Depth to Water (ft)	Depth to Product (ft)	pH	Temperature (°C)	Dissolved Oxygen (mg/L)	Conductivity (μhmos)	Redox (mV)
MW-46	4.37	—	7.37	4.25	11.49	139	300
58	5.90	—	7.13	6.21	11.49	52	307
49	5.55	—	7.10	5.03	11.97	98	308
51	4.06	—	8.00	5.51	14.38	28	278
43	DRY						
62	6.41	—	8.14	6.74	5.48	65	251
61R	4.70	—	6.79	6.36	11.61	89	334
44	2.83	—	7.02	6.44	11.82	43	319
211	6.57	—	5.83	5.68	10.49	140	320
213	4.71	—	7.38	7.63	11.50	22	299
54	6.80	—	6.10	5.38	3.52	84	367

Comments:

EA 5120 0794-7

EA Engineering, Science, and Technology

FIELD RECORD OF WATER QUALITY PARAMETER ANALYSIS

Project Name: OLD FUEL FARM	Project No: 2960035	Date: 4/30/99
Weather/Temperature/Barometric Pressure/Humidity: CLOUDY 60°F		
EA Personnel: JG	Equipment: YSI, SLOPE INDICATOR	

Location	Time (0000 hr)	Depth To Water (ft)	Depth to Product	pH	Temperature (°C)	Dissolved Oxygen (mg/L)	Conductivity (μhmos)	Redox (mV)
WF-1		5.08		8.13	13.26	5.91	227	-65
-2		5.74		8.57	11.30	7.05	145	-85
-3		4.32		8.54	10.66	8.13	39	-64
-4		5.71		8.07	10.06	5.80	167	-46
-5		5.61		6.95	9.03	7.41	66	57
-6		4.76		7.59	8.71	6.36	61	11
-7		5.15		7.47	9.94	6.26	163	14
-8		5.60		7.63	9.05	7.43	183	7
-9		6.55		7.66	9.07	7.76	145	1
-10		5.63		7.01	7.59	7.17	84	50
-11		5.56		7.71	8.93	6.28	93	6
-12		7.05		8.15	8.68	6.91	76	-34
-13		~~6.0~~	BENT					
-14		6.20		7.31	9.11	4.81	94	25
-15		6.15		7.48	9.42	6.37	76	16
-16R		7.20		9.37	11.88	7.88	387	-34
-17R		7.61		10.17	10.07	7.79	152	-84
-18R		6.04		9.16	11.68	7.78	154	-23
-21		6.50		8.41	9.98	6.71	161	21

Comments:

EA 5120 0794-7

EA Engineering, Science, and Technology

FIELD RECORD OF WATER QUALITY PARAMETER ANALYSIS

Project Name: OLD FUEL FARM	Project No: 2960035	Date: 4/30/99
Weather/Temperature/Barometric Pressure/Humidity: CLOUDY, 60°F		
EA Personnel: JG	Equipment: YSI, SLOPE INDICATOR	

Location	Time (0000 hr)	Depth To Water (ft)	Depth to Product	pH	Temperature (°C)	Dissolved Oxygen (mg/L)	Conductivity (μhmos)	Redox (mV)
-22		6.62		8.29	10.54	8.18	432	-109

Comments:

EA 5120 0794-7

EA Engineering, Science, and Technology

FIELD RECORD OF WATER QUALITY PARAMETER ANALYSIS

Project Name:	Project No: 2960035	Date: 4/30/99
Weather/Temperature/Barometric Pressure/Humidity:		
EA Personnel: CLOUDY, 60°F SG	Equipment: YSI AND SLOPE INDICATOR	

Location	Time (0000 hr)	Depth To Water (ft)	Depth to Product	pH	Temperature (°C)	Dissolved Oxygen (mg/L)	Conductivity (µhmos)	Redox (mV)
MW-46		5.21	—	8.26	7.83	9.47	153	34
-58		6.11	—	8.42	8.11	9.13	56	26
-49		5.81	—	8.09	7.88	7.54	90	42
-51		4.35	—	8.22	9.32	10.26	31	36
-43		~~7.08~~ 7.87						
-62		8.91		8.59	7.38	6.85	59	15
-61R		5.26		6.91	12.05	7.33	95	56
-44		3.18		8.61	11.26	6.72	46	-82
-211		7.02		7.70	8.26	8.25	131	Ø
-213		~~6.66~~		8.44	11.06	9.41	30	-52
~~-54~~		~~6.22~~		~~7.27~~	~~7.25~~	~~8.15~~	~~65~~	32

Comments:

EA 5120 0794-7

EA Engineering, Science, and Technology

FIELD RECORD OF WATER QUALITY PARAMETER ANALYSIS

Project Name: OLD FUEL FARM	Project No: 2960035	Date: 5/14/99
Weather/Temperature/Barometric Pressure/Humidity: SUNNY, 70°F		
EA Personnel: BCB	Equipment: YSI 600XL, SLOPE INDICATOR	

Location	Time (0000 hr)	Depth To Water (ft)	Depth to Product	pH	Temperature (°C)	Dissolved Oxygen (mg/L)	Conductivity (μhmos)	Redox (mV)
WP-1		5.07	–	6.25	12.3	4.73	191	315
2		6.92	–	6.14	11.0	1.72	114	310
3		4.31	–	6.26	10.7	3.96	44	298
4		5.70	–	6.17	11.1	2.96	122	298
5		5.57	–	6.34	10.2	3.30	69	317
6		4.76	–	6.01	9.3	3.98	60	316
7		5.14	–	6.01	11.0	2.60	240	314
8		5.61	–	6.10	10.57	3.80	215	301
9		7.07	–	6.21	10.3	7.23	175	299
10		5.52	–	7.04	9.1	6.21	91	265
11		5.52	–	6.13	10.6	4.46	99	308
12		7.24	–	6.20	10.4	3.40	89	302
13		6.15	WELL	OBSTRUCTED				
14		6.10	–	5.79	10.4	2.65	80	325
15		6.00	–	6.04	10.7	2.85	68	314
16R		7.69	–	6.21	10.6	3.50	110	299
17R		7.98	–	6.05	10.5	3.85	85	298
18R		6.00	–	6.10	10.4	3.01	90	299
21		6.54	–	6.52	11.6	6.22	177	316

VERY LITTLE WATER IN WP

Comments:

EA 5120 0794-7

EA Engineering, Science, and Technology

FIELD RECORD OF WATER QUALITY PARAMETER ANALYSIS

Project Name: OLD FUEL FARM	Project No: 2960035	Date: 5/14/99
Weather/Temperature/Barometric Pressure/Humidity: SUNNY, 70°F		
EA Personnel: BCB	Equipment: YSI 600XL, SLOPE INDICATOR	

Location	Time (0000 hr)	Depth To Water (ft)	Depth to Product	pH	Temperature (°C)	Dissolved Oxygen (mg/L)	Conductivity (µhmos)	Redox (mV)
-22		6.70	–	6.20	10.9	4.50	100	298

Comments: _____

EA 5120 0794-7

Page __ of __

EA Engineering, Science, and Technology

FIELD RECORD OF WATER QUALITY PARAMETER ANALYSIS

Project Name: OLD FUEL FARM	Project No: 2960035	Date: 5/14/99
Weather/Temperature/Barometric Pressure/Humidity: SUNNY, 70°F		
EA Personnel: BCB	Equipment: YSI 600XL, SLOPE INDICATOR	

Location	Time (0000 hr)	Depth To Water (ft)	Depth to Product	pH	Temperature (°C)	Dissolved Oxygen (mg/L)	Conductivity (µhmos)	Redox (mV)
MW-46		5.15	–	6.33	9.65	9.20	160	295
58		6.18	–	6.29	8.55	3.8	58	301
49		5.74	–	6.21	9.14	2.9	103	304
51		4.46	–	6.69	11.4	8.7	33	277
43		7.01	WELL	OBSTRUCTED				
62		8.85	–	6.64	7.8	3.00	55	292
61R		5.20	–	6.57	12.8	7.58	100	295
44		3.46	–	6.70	11.6	5.29	45	275
211		7.18	–	6.10	9.0	3.60	112	311
213		5.79	–	6.76	11.5	9.07	29	270
54		6.17	–	7.78	9.6	7.16	75	217

Comments: _____

EA 5120 0794-7

EA Engineering, Science, and Technology

FIELD RECORD OF WATER QUALITY PARAMETER ANALYSIS

Project Name: OLD FUEL FARM	Project No: 29600.35	Date: 5/28/99
Weather/Temperature/Barometric Pressure/Humidity: SUNNY 70°F		
EA Personnel: BCB	Equipment: YSI 600XL, SLOPE INDICATOR	

Location	Time (0000 hr)	Depth To Water (ft)	Depth to Product	pH	Temperature (°C)	Dissolved Oxygen (mg/L)	Conductivity (μhmos)	Redox (mV)
WP-1		4.65	–	6.06	15.17	4.00	115	162
2		5.02	–	6.04	14.56	1.74	187	136
3		4.04	–	6.23	14.31	5.27	46	165
4		4.74	–	7.70	14.38	3.00	109	166
5		5.51	–	5.87	12.69	2.60	57	164
6		4.35	–	5.89	13.20	4.87	44	176
7		4.60	–	6.03	14.36	4.20	135	190
8		5.07	–	7.72	13.33	1.72	273	160
9		6.76	INSUFFICIENT WATER					
10		4.75	–	5.65	12.51	6.66	97	270
11		5.05	–	5.81	12.94	2.56	92	171
12		6.70	–	6.35	12.84	7.72	63	198
13		4.80	–	OBSTRUCTED				
14		5.61	–	6.59	13.04	2.80	76	251
15		5.41	–	6.58	13.70	4.20	73	250
16R		7.66	–	6.11	16.86	5.71	422	190
17R		7.65	–	7.49	16.60	6.48	200	201
18R		5.71	–	6.40	17.24	7.00	~~266~~ 177	266
21		5.90	–	5.61	15.54	6.15	174	200

Comments: _____

EA 5120 0794-7

EA Engineering, Science, and Technology

FIELD RECORD OF WATER QUALITY PARAMETER ANALYSIS

Project Name: OLD FUEL FARM	Project No: 29600.35	Date: 5/28/99
Weather/Temperature/Barometric Pressure/Humidity: SUNNY 70°F		
EA Personnel: BLB	Equipment: YSI 600XL, SLOPE INDICATOR	

Location	Time (0000 hr)	Depth To Water (ft)	Depth to Product	pH	Temperature (°C)	Dissolved Oxygen (mg/L)	Conductivity (μhmos)	Redox (mV)
22		6.14	–	8.05	18.43	5.09	249	150

Comments: _____

EA 5120 0794-7

EA Engineering, Science, and Technology

FIELD RECORD OF WATER QUALITY PARAMETER ANALYSIS

Project Name: OLD FUEL FARM	Project No: 29600.35	Date: 5/28/99
Weather/Temperature/Barometric Pressure/Humidity: SUNNY, 70°F		
EA Personnel: BCB	Equipment: YSI 600XL, SLOPE INDICATOR	

Location	Time (0000 hr)	Depth To Water (ft)	Depth to Product	pH	Temperature (°C)	Dissolved Oxygen (mg/L)	Conductivity (μhmos)	Redox (mV)
MW-46		4.66	–	7.30	12.68	6.90	177	217
58		6.08	–	7.00	11.18	4.10	66	224
49		5.52	–	6.89	11.19	2.30	109	230
51		4.16	–	7.72	12.93	7.90	45	192
43		6.62	WELL OBSTRUCTED					
62		8.50	–	6.18	9.30	1.99	69	149
61R		4.62	–	6.20	15.25	6.14	108	157
44		8.07	–	6.36	14.03	5.30	42	138
211		6.57	–	6.33	13.09	4.20	133	210
213		5.60	–	8.01	13.63	8.69	33	166
54		5.75	–	6.33	13.48	8.82	89	211

Comments: _____

EA 5120 0794-7

EA Engineering, Science, and Technology

FIELD RECORD OF WATER QUALITY PARAMETER ANALYSIS

Project Name: Fuel Farm O&M	Project No: 29600 55	Date: 6/14/99
Weather/Temperature/Barometric Pressure/Humidity: Cloudy, Humid 70°F		
EA Personnel: JG	Equipment: YSI, Interface Probe	

	Location	Time (0000 hr)	Depth To Water (ft)	Depth to Product	pH	Temperature (°C)	Dissolved Oxygen (mg/L)	Conductivity (μhmos)	Redox (mV)
2	WP-1	1019	5.62	—	5.58	13.85	11.43	386	166
	2	1122	6.07	—	5.84	17.44	6.62	148	132
1	3	1013	4.81	—	5.82	14.64	4.13	40	174
9	4	1050	6.09	—	5.64	13.56	9.42	163	138
	5	1129	5.84	—	5.60	13.94	4.23	74	146
	6	1118	4.93	—	5.70	12.87	5.47	86	134
	7	1106	5.30	—	5.61	15.59	8.05	207	131
10	8	1055	5.75	—	6.05	14.84	11.19	313	117
8	9	DRY							
3	10	1026	6.01	—	5.52	11.60	6.54	98	167
	11	1112	5.69	—	5.68	14.26	6.14	113	130
	12	1102	7.23	—	5.97	14.26	4.94	133	128
	13	BENT							
4	14	1030	6.52	—	5.34	13.52	5.00	127	143
6	15	1037	6.27	—	5.67	13.12	3.91	60	135
7	16R	1137	ARTESIAN	—	9.28	17.76	8.53	2546	-71
	17R	1151	8.14	—	10.34	16.35	10.28	269	-47
5	18R	1218	6.76	—	7.99	18.00	12.34	161	58
	21	1206	6.83	—	8.07	16.19	13.46	236	40

Comments:

EA 5120 0794-7

22	1158	6.90	—	10.70	15.82	11.53	288	-50

EA Engineering, Science, and Technology

FIELD RECORD OF WATER QUALITY PARAMETER ANALYSIS

Project Name: Fuel Farm O & M	Project No: 29600.35	Date: 6/14/99
Weather/Temperature/Barometric Pressure/Humidity: Foggy, Misty, 60°F		
EA Personnel: JG	Equipment: YSI, Interface Probe	

Location	Time (0000 hr)	Depth To Water (ft)	Depth to Product	pH	Temperature (°C)	Dissolved Oxygen (mg/L)	Conductivity (μmhos)	Redox (mV)
MW 43	DRY →							
44	0948	3.61	—	6.23	15.90	~~6.~~ 5.81 11.76	43	177
46	0850	5.52	—	7.80	13.97	~~12.22~~ JG	192	155
49	0906	6.09	—	6.81	~~4.22~~ 12.01	4.22	90	180
51	0911	5.65	—	6.97	12.64	8.86	38	171
54	0923	7.74	—	5.80	12.44	4.76	96	208
58	0900	6.22	—	7.50	11.95	~~6.~~ 5.74	67	161
61R	0942	5.75	—	6.05	17.25	7.50	122	190
62	0931	9.61	—	5.94	8.99	6.35	39	195
211	1001	7.19	—	5.69	12.57	4.03	124	200
213	0954	6.45	—	6.01	14.23	7.54	33	178

Comments:

EA-5120 0794-7

EA Engineering, Science, and Technology

FIELD RECORD OF WATER QUALITY PARAMETER ANALYSIS

Project Name: Fuel Farm	Project No: 2960035	Date: 6/28
Weather/Temperature/Barometric Pressure/Humidity: 70°, overcast, humid		
EA Personnel: SYC	Equipment: YSI 600XL interface probe	

Location	Time (0000 hr)	Depth To Water (ft)	Depth to Product	pH	Temperature (°C)	Dissolved Oxygen (mg/L)	Conductivity (µhmos)	Redox (mV)
WP-1		5.90	—	5.81	14.41	5.66	413	232
2		6.38	—	6.20	17.01	5.26	143	205
3		5.22	—	6.29	13.15	5.53	39	196
4		6.80	—	6.08	15.01	6.04	196	205
5		6.03	—	6.06	13.81	5.88	76	227
6		5.29	—	6.15	12.10	6.40	96	223
7		5.71	—	5.98	13.79	5.04	178	234
8		6.27	—	5.89	14.85	5.26	345	214
9		dry	—	—				
10		6.45	—	6.59	10.97	5.78	103	250
11		6.07	—	6.06	13.74	5.11	128	234
12		dry	—	—				
14		6.98	—	6.23	14.27	4.83	154	247
15		6.70	—	6.51	14.50	6.84	76	221
16R		7.19	—	6.43	14.38	5.12	88	243
17R		8.50	—	6.12	14.61	4.89	53	238
18R		7.17	—	insufficient water				
21		7.17	—	6.51	14.12	5.89	168	281
22		7.33	—	6.08	14.29	4.31	101	312

Comments:

EA-5120 0794-7

EA Engineering, Science, and Technology

FIELD RECORD OF WATER QUALITY PARAMETER ANALYSIS

Project Name: Fuel Farm	Project No: 2960035	Date: 6/28/99
Weather/Temperature/Barometric Pressure/Humidity: 70° overcast humid		
EA Personnel: SYC	Equipment: YSI 600XL interface probe	

Location	Time (0000 hr)	Depth To Water (ft)	Depth to Product	pH	Temperature (°C)	Dissolved Oxygen (mg/L)	Conductivity (µhmos)	Redox (mV)
MW NASB 46		5.98	—	6.13	13.19	5.90	363	165
58		6.47	—	6.36	11.90	5.61	66	165
49		6.85	—	6.34	11.74	5.92	104	169
51		6.43	—	6.63	11.75	6.34	58	148
43		dry	—					
62		10.31	—	6.46	9.38	5.43	49	204
61R		6.10	—	5.98	16.20	5.37	149	226
44		4.01	—	6.64	14.85	6.67	39	180
211		7.78	—	6.05	13.50	6.32	270	203
213		7.20	—	6.61	13.63	7.37	33	170
54		7.18	—	6.92	11.03	5.74	201	245

Comments: _____

EA 5120 0794-7

Appendix C

Field Record of
Air Sparging Well Point Monitoring Forms

EA Engineering, Science, and Technology

FIELD RECORD OF BIOSPARGING WELL POINT MONITORING

Biosparging System, Old Navy Fuel Farm, Naval Air Station, Brunswick Maine

EA Personnel: BCB, MC	Date: 1/30/99	Time: 0800
Weather: SUNNY 6°F	Instrument(s): FOXBORO TVA 1000A	

Location	FID TVH (ppm_v)	PID TVH (ppm_v)	(1) Other	(1) Other	Comments
WP-1	0.5	0			
WP-2	69	17			
WP-3	93	0			
WP-4	3	0			
WP-5	3250	375			
WP-6	1.0	0			
WP-7	25	5			
WP-8	0	0			
WP-9	0	0			
WP-10	1000	20	—	—	
WP-11	0	0			
WP-12	11	0			
WP-13	0	0			
WP-14	0	0			
WP-15	0	0			
WP-16R					
WP-17R					
WP-18R					
WP-21					
WP-22					

EA 5120 0794-4

(1) – GA-90 EQUIPMENT FAILURE. POSSIBLY DUE TO COLD

FIELD RECORD OF BIOSPARGING WELL POINT MONITORING

Biosparging System, Old Navy Fuel Farm, Naval Air Station, Brunswick Maine

EA Personnel: B.D.A	Date: 2/25/99	Time:
Weather: overcast, cool (20°)	Instrument(s): LANDTEC GA90, TVA-1000	

Location	FID TVH (ppm_v)	PID TVH (ppm_v)	CH_4	CO_2	O_2	Comments
WP-1	43	0	0	0	20.6	System off line -
WP-2	103	26	0	0	20.6	
WP-3	167	0	0	0	20.6	
WP-4	43	14	0	0	20.6	
WP-5	78	8	0	0	20.6	
WP-6	2	1	0	0	20.6	
WP-7	42	8	0	0	20.6	
WP-8	20	0	0	0	20.6	
WP-9	0	0	0	0	20.5	
WP-10	120	4	0	0	20.6	
WP-11	2	0	0	0	20.6	
WP-12	0	0	0	0	20.5	
WP-13	0	0	0	0	20.6	(pipe bent)
WP-14	0	0	0	0	20.6	
WP-15	0	0	0	0	20.5	
WP-16R *	0	0	0	0	20.6	
WP-17R *	0	0	0	0	20.6	
WP-18R *	1	0	0	0	20.6	
WP-20						
WP-21						
WP-22						

EA 5120 0794-4

* Done in 2" well - System off line

EA Engineering, Science, and Technology

FIELD RECORD OF BIOSPARGING WELL POINT MONITORING

Biosparging System, Old Navy Fuel Farm, Naval Air Station, Brunswick Maine

EA Personnel: BCB	Date: 3/24/99	Time: 1300
Weather: 45°F RAINING	Instrument(s): FOXBORO	

Location	FID TVH (ppm_v)	PID TVH (ppm_v)	Other	Other	Comments
WP-1					
WP-2					
WP-3					
WP-4					
WP-5					
WP-6					
WP-7					
WP-8					
WP-9					
WP-10					
WP-11					
WP-12					
WP-13					
WP-14					
WP-15					
WP-16R					
WP-17R					
WP-18R WP-20 WP-21					

- UNABLE TO TAKE READINGS DUE TO WEATHER

FIELD RECORD OF BIOSPARGING WELL POINT MONITORING

Biosparging System, Old Navy Fuel Farm, Naval Air Station, Brunswick Maine

EA Personnel: KS/JG	Date: 4/15/99	Time:
Weather: Cloudy, Calm, 50°	Instrument(s): GA 90, TVA 1000	

	Location	FID TVH (ppm$_v$)	PID TVH (ppm$_v$)	CH_4	CO_2	O_2	Comments
	WP-1	~~1.28~~ 2.98	~~0.08~~ 0.27	— 0.3	∅	~~20.5~~ 20.4	
	WP-2	6.33	3.01	— 0.3	∅	20.4	
	WP-3	0.73	0.23	— 0.3	∅	20.5	
	WP-4	~~5.8~~ 9.78	~~35.59~~ 3.04	— 0.3	∅	20.4	
	WP-5	~~3.04~~ 35.37 ↔	~~35.37~~ 3.04	— 0.3	∅	20.4	
	WP-6	1.48	0.0	— 0.2	∅	20.7	
	WP-7	5.69	0.62	— 0.2	∅	20.6	
	WP-8	1500.86	4.62	— 0.3	∅	20.8	
	WP-9	1.60	0.0	— 0.2	∅	20.0	
	WP-10	1.20	0.08	— 0.3	∅	20.5	
	WP-11	1.27	0.0	— 0.2	∅	20.6	
	WP-12	34.87	1.27	— 0.2	∅	20.8	
Bent	WP-13						
	WP-14	0.0	0.0	— 0.3	∅	20.6	
	WP-15	0.92	0.0	— 0.3	∅	20.6	
	WP-16R	36.13	0.0	— 0.2	∅	20.7	readings taken from WP 16
	WP-17R	2.05	0.03	— 0.2	∅	20.7	readings taken from WP 17
	WP-18R	1.76	0.00	— 0.2	∅	20.6	readings taken from WP 18
Destroyed	WP-20						
P	WP-21	~~0.15~~ 30.06 ↔	~~30.06~~ 0.08	— 0.3	∅	20.4	whiff of methane
P	WP-22	2.03	0.0	— 0.2	∅	20.6	petroleum odor

EA 5120 0794-4

EA Engineering, Science, and Technology

FIELD RECORD OF BIOSPARGING WELL POINT MONITORING

Biosparging System, Old Navy Fuel Farm, Naval Air Station, Brunswick Maine

EA Personnel: BCB	Date: 5/28/99	Time: 1310
Weather: SUNNY, 70°F	Instrument(s): GA-90, TVA-1000	

Location	FID TVH (ppm_v)	PID TVH (ppm_v)	CH_4	CO_2	O_2	Comments
WP-1	3	0	0	0	20.5	
WP-2	100	8	0	0	20.4	
WP-3	5	0	0	0	20.5	
WP-4	0	0	0	0	20.7	
WP-5	0	0	0	0	20.6	
WP-6	0	0	0	0	20.6	
WP-7	85	3	0	0	20.8	
WP-8	1000	5	0	0	20.5	
WP-9	2	0	0	0	20.6	
WP-10	0	0	0	0	20.7	
WP-11	1	0	0	0	20.7	
WP-12	35	1	0	0	20.6	
WP-13	OBSTRUCTED	0	0	0	20.7	
WP-14	0	0	0	0	20.6	
WP-15	0	0	0	0	20.6	
WP-16R	36	0	0	0	20.7	READING TAKEN FROM WP-16
WP-17R	5	0	0	0	20.7	READING TAKEN FROM WP-17
WP-18R	150	0	0	0	20.6	READING TAKEN FROM WP-18
WP-21	0	0	0	0	20.4	
WP-22	0	0	0	0	20.6	

EA Engineering, Science, and Technology

FIELD RECORD OF BIOSPARGING WELL POINT MONITORING

Biosparging System, Old Navy Fuel Farm, Naval Air Station, Brunswick Maine

EA Personnel: JG	Date: 6/14/99	Time: 1348
Weather: Cloudy, Humid, 75°F, Breezy	Instrument(s): TVA, Landtrec	

Location	FID TVH (ppm_v)	PID TVH (ppm_v)	CH_4	CO_2	O_2	Comments
WP-1	113	7.60	0.2	ϕ	20.7	
WP-2	80	13	0.2	ϕ	20.8	
WP-3	529	16.4	0.2	ϕ	20.8	
WP-4	44.2	24.3	0.2	0.2	20.7	
WP-5	ϕ	ϕ	0.2	ϕ	20.7	
WP-6	2.54	10.36	0.2	ϕ	20.8	
WP-7	21.4	2.98	0.2	ϕ	20.8	
WP-8	ϕ	3.16	0.2	ϕ	21.1	
WP-9	0.80	0.25	0.2	0.1	20.8	
WP-10	0.75	4.30	0.1	0.1	21.1	
WP-11	ϕ	16.8	0.2	0.6	20.4	
WP-12	ϕ	8.1	0.2	ϕ	21.1	
WP-13	14.7	ϕ	0.2	0.1	20.8	
WP-14	ϕ	12.6	0.2	ϕ	20.6	
WP-15	2.00	4.66	0.1	0.2	21.0	
WP-16R	ϕ	24.2	0.2	ϕ	20.8	
WP-17R	0.95	ϕ	0.2	ϕ	21.3	
WP-18R	~~23~~ ϕ	ϕ 23	0.2	ϕ	20.5	
WP-21	161	ϕ	0.2	ϕ	20.7	
WP-22	760	1.49	0.2	ϕ	21.1	

Appendix D

Field Record of
Well Gauging, Purging, and Sampling Forms

EA Engineering, Science, and Technology

FIELD RECORD OF WELL GAUGING, PURGING, AND SAMPLING

Site Name:	Fuel Farm	Project Number:	29600.35
Well ID:	MW-44	Well Lock Status:	Locked
Well Condition:	OK	Weather:	Sunny 60°F +

Gauge Date:	6-16-99	Gauge Time:	10:50
Sounding Method:	Water level indicator	Measurement Ref:	3.79 - PVC Mark
Stick Up/Down (ft):	~18"	Well Diameter (in.):	2" ID

Purge Date:	6-16-99	Purge Time:	1100
Purge Method:	Subm. Pump -	Field Personnel:	PH / JG
Ambient Air VOCs (ppm):	Start: 0 End: 0	Well Mouth VOCs (ppm):	Start: 8.5 End: 0

WELL VOLUME

A. Well Depth (ft):		D. Well Volume/ft (L):	
B. Depth to Water (ft):	3.79	E. Well Volume (L) (C*D):	
C. Liquid Depth (ft) (A-B)		F. Three Well Volumes (L)	

Parameter	Beginning	1	2	3	4	5
Time (min.)	11:00	1105	1110	11:15	11:20	11:25
Depth to Water (ft)	3.85	3.89	3.91	3.90	3.90	3.90
Purge Rate (gpm)	200 ml	200 ml	200 ml	200 ml	200 ml	200 ml
Volume Purged (L)	200 ml	1000 ml	1000 ml	1000 ml	1000 ml	1000 ml
PH	3.36	4.73	5.35	5.48	5.53	5.58
Temperature (°C)	12.68	12.99	14.08	14.59	14.49	14.71
Conductivity (μmhos/cm)	81.00	93.00	66.00	64.00	64.00	60.00
Dissolved Oxygen (mg/L)	0.57	0.45	1.32	1.15	1.43	1.58
Turbidity (NTU)	428.	450	134.0	72.0	59.0	31.0
eH (mV)	-49.8	-68.2	-70.0	-51.9	-38.3	-25.6

Total Quantity of Water Removed (L):	9.2 L		
Samplers:	PH / JG	Sampling Time (Start/End):	11:45 - 11:50
Sampling Date:	6-16-99	Decontamination Fluids Used:	DI
Sample Type:	GRAB	Sample Preservatives:	HCL
Sample Bottle IDs:	FF-MW-44		
Sample Parameters:	VOC-BTEX, TPH-GRO / DRO Fe, Mn.		

EA Engineering, Science, and Technology

FIELD RECORD OF WELL GAUGING, PURGING, AND SAMPLING (OVERFLOW PAGE)

Site Name:	Fuel Farm	Project Number:	29600.35	Date:	6-16-99
Well ID:	MW-44	Field Personnel:	PH / JG		

Parameter	6	7	8	9	10	11
Time (min.)	11:30	11:35	11:40	11:45		
Depth to Water (ft)	3.90	3.90	3.90	3.90		
Purge Rate (gpm)	200 ml	200 ml	200 ml	200 ml		
Volume Purged (L)	1000 ml	1000 ml	1000 ml	1000 ml		
pH	5.59	5.60	5.60	5.61		
Temperature (°C)	14.85	14.98	15.04	15.40		
Conductivity (μmhos/cm)	65.00	66.00	66.00	65.00		
Dissolved Oxygen (mg/L)	1.65	1.73	1.78	1.79		
Turbidity (NTU)	25.3	22.7	21.7	17.6		
eH (mV)	-15.7	-16.2	-10.0	-9.0		

Parameter	12	13	14	15	16	17
Time (min.)						
Depth to Water (ft)						
Purge Rate (gpm)						
Volume Purged (L)						
pH						
Temperature (°C)						
Conductivity (μmhos/cm)						
Dissolved Oxygen (mg/L)						
Turbidity (NTU)						
eH (mV)						

Comments and Observations:

EA Engineering, Science, and Technology

FIELD RECORD OF WELL GAUGING, PURGING, AND SAMPLING

Site Name:	MW46 Fuel Farm	Project Number:	29160.35
Well ID:	MW46	Well Lock Status:	Good
Well Condition:	Good	Weather:	PC, Breezy, 65°F

Gauge Date:	6/15/99	Gauge Time:	1014
Sounding Method:	Slope Indicator	Measurement Ref:	TOC
Stick Up/Down (ft):		Well Diameter (in.):	2

Purge Date:	6/15/99	Purge Time:	1020
Purge Method:	Low Flow	Field Personnel:	SVC, JG
Ambient Air VOCs (ppm):	Start: End:	Well Mouth VOCs (ppm):	Start: End:

WELL VOLUME

A. Well Depth (ft):		D. Well Volume/ft (L):	
B. Depth to Water (ft):	5.37	E. Well Volume (L) (C*D):	
C. Liquid Depth (ft) (A-B)		F. Three Well Volumes (L)	

Parameter	Beginning	1	2	3	4	5
Time (min.)	1020	1025	1030	1035	1040	1045
Depth to Water (ft)	5.37	5.85	5.93	5.93	5.97	5.90
Purge Rate (gpm)	0.2	0.2	0.2	0.2	0.2	0.2
Volume Purged (L)	—	1	2	3	4	5
PH	5.93	6.07	6.10	6.11	6.11	6.4
Temperature (°C)	14.03	11.93	13.56	14.22	15.09	16.15
Conductivity (μmhos/cm)	356	366	385	392	394	407
Dissolved Oxygen (mg/L)	2.86	0.95	1.20	0.74	0.70	1.48
Turbidity (NTU)	214	215	119	87	65	20
eH (mV)	125	121	114	110	105	99

Total Quantity of Water Removed (L):	8		
Samplers:	SVC, JG	Sampling Time (Start/End):	1103
Sampling Date:	5/16/99	Decontamination Fluids Used:	DI, Isopropanol
Sample Type:	Grab	Sample Preservatives:	HCl
Sample Bottle IDs:	FF-MW-46		
Sample Parameters:	TPH GRO, TPH DRO, BTEX/MTBE		

EA Engineering, Science, and Technology

FIELD RECORD OF WELL GAUGING, PURGING, AND SAMPLING (OVERFLOW PAGE)

Site Name:	Fuel Farm	Project Number:	29600.35	Date:	6/15/99
Well ID:	MW46	Field Personnel:	SVC, JCG		

Parameter	6	7	8	9	10	11
Time (min.)	1050	1054	1057	1100		
Depth to Water (ft)	5.89	5.89	5.89	5.89		
Purge Rate (gpm)	0.2	0.2	0.2	0.2		
Volume Purged (L)	6	6.8	7.4	8		
pH	6.14	6.13	6.14	6.14		
Temperature (°C)	16.22	16.41	16.66	16.80		
Conductivity (μmhos/cm)	407	410	414	417		
Dissolved Oxygen (mg/L)	0.98	0.95	0.95	0.97		
Turbidity (NTU)	13	9	8	7		
eH (mV)	96	93	91	89		

Parameter	12	13	14	15	16	17
Time (min.)						
Depth to Water (ft)						
Purge Rate (gpm)						
Volume Purged (L)						
pH						
Temperature (°C)						
Conductivity (μmhos/cm)						
Dissolved Oxygen (mg/L)						
Turbidity (NTU)						
eH (mV)						

Comments and Observations:

EA Engineering, Science, and Technology

FIELD RECORD OF WELL GAUGING, PURGING, AND SAMPLING

Site Name:	Fuel Farm	Project Number:	29600.35
Well ID:	MW 49	Well Lock Status:	Good
Well Condition:	Good	Weather:	PC, Breezy, 65°F

Gauge Date:	6/15/99	Gauge Time:	1128
Sounding Method:	Slope Indicator	Measurement Ref:	TOC
Stick Up/Down (ft):		Well Diameter (in.):	2

Purge Date:	6/15/99	Purge Time:	1130
Purge Method:	Low Flow	Field Personnel:	SVC, JG
Ambient Air VOCs (ppm):	Start: End:	Well Mouth VOCs (ppm):	Start: End:

WELL VOLUME

A. Well Depth (ft):		D. Well Volume/ft (L):	
B. Depth to Water (ft):	6.03	E. Well Volume (L) (C*D):	
C. Liquid Depth (ft) (A-B)		F. Three Well Volumes (L)	

Parameter	Beginning	1	2	3	4	5
Time (min.)	1130	1135	1140	1145	1150	1155
Depth to Water (ft)	6.03	6.40	6.48	6.56	6.67	6.83
Purge Rate (gpm)	0.2	0.2	0.2	0.2	0.2	0.2
Volume Purged (L)	—	1	2	3	4	5
PH	5.99	5.93	5.93	5.86	5.79	5.76
Temperature (°C)	14.39	12.87	13.94	15.77	16.83	17.70
Conductivity (μmhos/cm)	179	158	146	142	139	136
Dissolved Oxygen (mg/L)	2.92	0.60	0.60	0.64	0.65	0.62
Turbidity (NTU)	20	10	9	7	6	4
eH (mV)	27	-2	-18	-30	-48	-74

Total Quantity of Water Removed (L):

Samplers:	SVC, JG	Sampling Time (Start/End):	1215
Sampling Date:	6/15/99	Decontamination Fluids Used:	DI, Isopropyl
Sample Type:	Grab	Sample Preservatives:	HCl
Sample Bottle IDs:	FF-MW 49		
Sample Parameters:	TPH GRO, DRO, BTEX/MTBE		

EA Engineering, Science, and Technology

FIELD RECORD OF WELL GAUGING, PURGING, AND SAMPLING (OVERFLOW PAGE)

Site Name:	Fuel Farm	Project Number:	29600.35	Date:	6/15/99
Well ID:	MW49	Field Personnel:	SVC, JG		

Parameter	6	7	8	9	10	11
Time (min.)	1200	1205	1208	1211	1214	
Depth to Water (ft)	6.91	6.94	6.99	7.09	7.14	
Purge Rate (gpm)	0.2	0.2	0.2	0.2	0.2	
Volume Purged (L)	6	7	7.6	8.2	8.8	
pH	5.74	5.73	5.74	5.74	5.74	
Temperature (°C)	18.25	18.87	19.07	19.33	19.57	
Conductivity (μmhos/cm)	135	140	140	139	141	
Dissolved Oxygen (mg/L)	0.68	0.64	0.66	0.64	0.62	
Turbidity (NTU)	5	5	5	6	4	
eH (mV)	-101	-99	-117	-119	-125	

Parameter	12	13	14	15	16	17
Time (min.)						
Depth to Water (ft)						
Purge Rate (gpm)						
Volume Purged (L)						
pH						
Temperature (°C)						
Conductivity (μmhos/cm)						
Dissolved Oxygen (mg/L)						
Turbidity (NTU)						
eH (mV)						

Comments and Observations:

EA Engineering, Science, and Technology

FIELD RECORD OF WELL GAUGING, PURGING, AND SAMPLING

Site Name:	Fuel Farm	Project Number:	21600.35
Well ID:	NAB MW51	Well Lock Status:	GOOD
Well Condition:	GOOD	Weather:	BREEZY, 65°F, heavy but humid

Gauge Date:	6/15/99	Gauge Time:	0858
Sounding Method:	Slope Indicator	Measurement Ref:	TOC
Stick Up/Down (ft):		Well Diameter (in.):	2

Purge Date:	6/15/99	Purge Time:	0906
Purge Method:	Low Flow	Field Personnel:	SBC, JG
Ambient Air VOCs (ppm):		Well Mouth VOCs (ppm):	

WELL VOLUME

A. Well Depth (ft):		D. Well Volume/ft (L):	
B. Depth to Water (ft):	5.84	C. Well Volume (L)	
E. Liquid Depth (ft) (A-B)		E. Three Well Volumes (L)	

Parameter	Beginning	1	2	3	4	5
Time (min.)	0906	0911	0916	0921	0926	0931
Depth to Water (ft)	5.84	5.89	5.96	5.92	5.91	5.91
Purge Rate (l/min)	0.2	0.2	0.2	0.2	0.2	0.2
Volume Purged (L)	—	1	2	3	4	5
pH	6.51	6.14	5.99	5.93	5.92	5.91
Temperature (°C)	12.47	10.61	11.87	12.47	13.08	13.22
Conductivity (μmhos/cm)	91	104	94	4388	87	83
Dissolved Oxygen (mg/L)	4.43	0.92	0.76	1.10	0.97	0.89
Turbidity (NTU)	42	33	36	39	31	20
eH (mV)	144	143	137	132	126	123

Total Quantity of Water Removed (L):	8.2		
Samplers:	SBC, SVC, JG	Sampling Time (Start/End):	0950
Sampling Date:	6/15/99	Decontamination Fluids Used:	DI, Isopropyl
Sample Type:	Grab	Sample Preservatives:	HCl
Sample Bottle IDs:	FF-MW-51		
Sample Parameters:	TPH GRO, TPH DRO, BTEX/MTBE		
Comments and Observations:			

EA Engineering, Science, and Technology

FIELD RECORD OF WELL GAUGING, PURGING, AND SAMPLING (OVERFLOW PAGE)

Site Name:	Fuel Farm	Project Number:	29600.35	Date:	6/15/99
Well ID:	MW 51	Field Personnel:	SVC		

Parameter	6	7	8	9	10	11
Time (min.)	0936	0941	0944	0947		
Depth to Water (ft)	5.91	5.91	5.91	5.92		
Purge Rate (gpm)	0.2	0.2	0.2	0.2		
Volume Purged (L)	6	7	7.6	8.2		
pH	5.90	5.90	5.90	5.90		
Temperature (°C)	13.42	13.85	14.03	14.07		
Conductivity (μmhos/cm)	85	85	87	86		
Dissolved Oxygen (mg/L)	0.80	0.72	0.70	0.69		
Turbidity (NTU)	11	9	7	5		
eH (mV)	118	117	115	111		

Parameter	12	13	14	15	16	17
Time (min.)						
Depth to Water (ft)						
Purge Rate (gpm)						
Volume Purged (L)						
pH						
Temperature (°C)						
Conductivity (μmhos/cm)						
Dissolved Oxygen (mg/L)						
Turbidity (NTU)						
eH (mV)						

Comments and Observations:

EA Engineering, Science, and Technology

FIELD RECORD OF WELL GAUGING, PURGING, AND SAMPLING

Site Name:	Fuel Farm	Project Number:	29600.35
Well ID:	MW-54	Well Lock Status:	Locked
Well Condition:	OK	Weather:	Sunny 65-70

Gauge Date:	6-16-99	Gauge Time:	2:40
Sounding Method:	Water Level Indicator	Measurement Ref:	POC (PVC)
Stick Up/Down (ft):		Well Diameter (in.):	2" ID

Purge Date:	6-16-99	Purge Time:	2:40/5min
Purge Method:	Sub. Pump	Field Personnel:	PH/JG
Ambient Air VOCs (ppm):	Start: 0 End:	Well Mouth VOCs (ppm):	Start: 0 End: 0

WELL VOLUME

A. Well Depth (ft):		D. Well Volume/ft (L):	
B. Depth to Water (ft):	6.83	E. Well Volume (L) (C*D):	
C. Liquid Depth (ft) (A-B)		F. Three Well Volumes (L)	

Parameter	Beginning	1	2	3	4	5
Time (min.)	2:45	2:50	2:55	3:00	3:05	3:10
Depth to Water (ft)	6.83	7.01	7.01	6.99	6.98	6.97
Purge Rate (gpm)	200 ml	200 ml	200 ml	200 ml	200 ml	200 ml
Volume Purged (L)	200 ml	1000 ml	1000 ml	1000 ml	1000 ml	1000 ml
PH	3.43	4.42	4.55	4.81	4.88	4.98
Temperature (°C)	12.56	12.22	12.60	13.02	13.38	14.32
Conductivity (μmhos/cm)	167	145.0	141.0	136.0	126.0	124.00
Dissolved Oxygen (mg/L)	0.60	1.17	1.25	1.01	1.02	0.87
Turbidity (NTU)	16.0	7.7	4.2	2.4	1.7	1.0
eH (mV)	73.5	89.1	97.5	116.4	122.4	130.9

Total Quantity of Water Removed (L):

Samplers:	PH / JG	Sampling Time (Start/End):	1525 - 1545
Sampling Date:	6-16-99	Decontamination Fluids Used:	DI / Isopropyl / Alconox
Sample Type:	GRAB	Sample Preservatives:	
Sample Bottle IDs:	FF-MW-54 + FF-MW-XDI		
Sample Parameters:	VOC-BTEX TPH GRO/DRO FE & MN		

EA Engineering, Science, and Technology

FIELD RECORD OF WELL GAUGING, PURGING, AND SAMPLING (OVERFLOW PAGE)

Site Name:	Fuel Farm	Project Number:	29600.35	Date:	6-16-99
Well ID:	MW-51	Field Personnel:	PH / JG		

Parameter	6	7	8	9	10	11
Time (min.)	3:15	3:20	3:23			
Depth to Water (ft)	6.97	6.98	6.98			
Purge Rate (gpm)	200 ml	200 ml	200 ml			
Volume Purged (L)	1000 ml	1000 ml	600 ml			
pH	4.96	4.95	4.96			
Temperature (°C)	14.92	15.0	15.04			
Conductivity (μmhos/cm)	119.	114.0	113.0			
Dissolved Oxygen (mg/L)	0.76	0.73	0.73			
Turbidity (NTU)	0.9	0.8	0.7			
eH (mV)	138.4	140.9	143.1			

Parameter	12	13	14	15	16	17
Time (min.)						
Depth to Water (ft)						
Purge Rate (gpm)						
Volume Purged (L)						
pH						
Temperature (°C)						
Conductivity (μmhos/cm)						
Dissolved Oxygen (mg/L)						
Turbidity (NTU)						
eH (mV)						

Comments and Observations:

EA Engineering, Science, and Technology

FIELD RECORD OF WELL GAUGING, PURGING, AND SAMPLING

Site Name:	N FUEL FARM	Project Number:	29600-35
Well ID:	MW58	Well Lock Status:	Good
Well Condition:	GOOD	Weather:	PC, Breezy 75°F

Gauge Date:	6/15/99	Gauge Time:	1345
Sounding Method:	Slope indicator	Measurement Ref:	TOC
Stick Up/Down (ft):		Well Diameter (in.):	2

Purge Date:	6/15/99	Purge Time:	1348
Purge Method:	Low Flow	Field Personnel:	SK + JCG
Ambient Air VOCs (ppm):		Well Mouth VOCs (ppm):	

WELL VOLUME

A. Well Depth (ft):		D. Well Volume/ft (L):	
B. Depth to Water (ft):	6.03	C. Well Volume (L)	
E. Liquid Depth (ft) (A-B)		E. Three Well Volumes (L)	

Parameter	Beginning	1	2	3	4	5
Time (min.)	1345	1350	1355	1400	1405	1410
Depth to Water (ft)	6.03	6.46	6.44	6.54	6.53	6.54
Purge Rate (l/min)	0.2	0.2	0.2	0.2	0.2	0.2
Volume Purged (L)	—	1.0	2.0	3.0	4.0	5.0
pH	5.51	5.58	5.61	5.65	5.67	5.32
Temperature (°C)	14.17	14.71	14.76	14.14	14.00	14.16
Conductivity (μmhos/cm)	85.00	79.00	72.00	76.00 SK	74	73
Dissolved Oxygen (mg/L)	0.66	~~0.08~~ 0.8 SK	~~0.7~~ 0.7 SK	~~0.0~~ 0.9	0	0.5
Turbidity (NTU)	8.9	0.2	~~-0.2~~ 0 SK	~~-0.7~~ 0 SK	0	0
eH (mV)	8.6	-25.6	-35.5	-56.7	-72.9	-83.1

Total Quantity of Water Removed (L):	9.0		
Samplers:	JAC & SVC	Sampling Time (Start/End):	1430 - 1440
Sampling Date:	6/15/99	Decontamination Fluids Used:	alconox, isopropyl alcohol
Sample Type:	GRAB	Sample Preservatives:	HCl
Sample Bottle IDs:	FF-MW-58		
Sample Parameters:	BTEX & MTBE; TPH-GRO; TPH-DRO		
Comments and Observations:			

EA Engineering, Science, and Technology

FIELD RECORD OF WELL GAUGING, PURGING, AND SAMPLING (OVERFLOW PAGE)

Site Name:	Fuel Farm	Project Number:	29600.35	Date:	6/15/99
Well ID:	MW-58	Field Personnel:	SVC & JCG		

Parameter	6	7	8	9	10	11
Time (min.)	1415	1420	1425	1430	~~1435~~	~~1440~~
Depth to Water (ft)	6.54	6.54	6.54	5.64		
Purge Rate (gpm)	0.2	0.2	0.2	0.2		
Volume Purged (L)	6.0	7.0	8.0	9.0		
pH	5.61	5.42	5.27	5.21		
Temperature (°C)	14.10	14.11	14.30	14.29		
Conductivity (μmhos/cm)	71	71	71	71		
Dissolved Oxygen (mg/L)	0.05	0.12	0.17	0.15		
Turbidity (NTU)	0	0	0	0		
eH (mV)	-90.7	96.5	-101.4	-105.5		

Parameter	12	13	14	15	16	17
Time (min.)						
Depth to Water (ft)						
Purge Rate (gpm)						
Volume Purged (L)						
pH						
Temperature (°C)						
Conductivity (μmhos/cm)						
Dissolved Oxygen (mg/L)						
Turbidity (NTU)						
eH (mV)						

Comments and Observations:

EA Engineering, Science, and Technology

FIELD RECORD OF WELL GAUGING, PURGING, AND SAMPLING

Site Name:	Fuel Farm	Project Number:	29600.35
Well ID:	MW-61R	Well Lock Status:	Locked
Well Condition:	OK	Weather:	Sunny 60°F +

Gauge Date:	6-16-99	Gauge Time:	1:05
Sounding Method:	Water level Indicator	Measurement Ref:	Mark on PVC
Stick Up/Down (ft):		Well Diameter (in.):	2" ID

Purge Date:	6-16-99	Purge Time:	5 min.
Purge Method:	Sub. Pump	Field Personnel:	PH / JG
Ambient Air VOCs (ppm):	Start: 0 End:	Well Mouth VOCs (ppm):	Start: 0 End: 0

WELL VOLUME

A. Well Depth (ft):		D. Well Volume/ft (L):	
B. Depth to Water (ft):	5.93	E. Well Volume (L) (C*D):	
C. Liquid Depth (ft) (A-B)		F. Three Well Volumes (L)	

Parameter	Beginning	1	2	3	4	5
Time (min.)	1:15	1:20	1:25	1:30	1:35	1:40
Depth to Water (ft)	5.93	6.00	5.99	6.01	6.03	6.01
Purge Rate (gpm)	200ml	200 ml	200ml	200 ml	200ml	200 ml
Volume Purged (L)	200 ml	1000 ml	1000 ml	1000 ml	1000 ml	1000 ml
PH	4.95	5.59	5.71	5.77	5.79	5.80
Temperature (°C)	18.5	17.75	18.75	19.55	18.80	18.07
Conductivity (μmhos/cm)	147.0	147.0	153.0	155.0	153.00	150.00
Dissolved Oxygen (mg/L)	0.28	0.56	0.43	0.70	0.59	0.45
Turbidity (NTU)	>6 2.9	2.2	1.9	3.1	4.1	5.6
eH (mV)	-70.0	-108.9	-117.8	-117.9	-123.6	-132.7

Total Quantity of Water Removed (L):	12.6 L		
Samplers:	PH/JG	Sampling Time (Start/End):	2:15 / 2:30
Sampling Date:	6-16-99	Decontamination Fluids Used:	DI
Sample Type:	GRAB	Sample Preservatives:	HCL
Sample Bottle IDs:	FF-MW-61R		
Sample Parameters:	VOC-BTEX TPH-GRO/DRO FE, MN		

EA Engineering, Science, and Technology

FIELD RECORD OF WELL GAUGING, PURGING, AND SAMPLING (OVERFLOW PAGE)

Site Name:	Fuel Farm	Project Number:	29600.35	Date:	6-16-99
Well ID:	MW-61R	Field Personnel:	PH / JG		

Parameter	6	7	8	9	10	11
Time (min.)	1:45	1:50	1:55	2:00	2:05	2:08
Depth to Water (ft)	6.01	6.03	6.04	6.01	5.99	6.00
Purge Rate (gpm)	200 ml	200 ml	200 ml	200 ml	200 ml	200 ml
Volume Purged (L)	1000 ml	1000 ml	1000 ml	1000 ml	1000 ml	600 ml
pH	5.55	5.58	5.68	5.54	5.69	5.72
Temperature (°C)	18.62	18.79	18.43	17.92	17.94	17.54
Conductivity (μmhos/cm)	151.0	150.0	150.0	151.00	150.0	146.0
Dissolved Oxygen (mg/L)	0.20	0.24	0.23	0.19	0.46	0.28
Turbidity (NTU)	9.3	10.5	13.3	23.9	3.5	3.5
eH (mV)	-124.4	-129.6	-139.5	-144.7	-125.6	-134.9

Parameter	12	13	14	15	16	17
Time (min.)	2:11	2:14	2:17			
Depth to Water (ft)	6.01	6.02	6.02			
Purge Rate (gpm)	200 ml	200 ml	200 ml			
Volume Purged (L)	600 ml	600 ml	600 ml			
pH	5.73	5.75	5.76			
Temperature (°C)	17.80	17.15	17.50			
Conductivity (μmhos/cm)	149.0	147.0	148.0			
Dissolved Oxygen (mg/L)	0.20	0.21	0.20			
Turbidity (NTU)	4.5	3.0	4.3			
eH (mV)	-139.3	-145.2	-147.0			

Comments and Observations:

Exchanged pocket terminal @ 1:45 - low battery -
Cleaned out flow-through cell @ 2:00 - turbidity questions -

EA Engineering, Science, and Technology

FIELD RECORD OF WELL GAUGING, PURGING, AND SAMPLING

Site Name:	FUEL FARM	Project Number:	29600.33
Well ID:	MW-62	Well Lock Status:	GOOD
Well Condition:	GOOD	Weather:	PC Breezy 75°F

Gauge Date:	6/15/99	Gauge Time:	1500
Sounding Method:	Slope indicator	Measurement Ref:	TOC
Stick Up/Down (ft):		Well Diameter (in.):	2

Purge Date:	6/15/99	Purge Time:	1502
Purge Method:	Low Flow	Field Personnel:	JCG + SVC
Ambient Air VOCs (ppm):		Well Mouth VOCs (ppm):	

WELL VOLUME

A. Well Depth (ft):	9.66 16.91	D. Well Volume/ft (L):	.16
B. Depth to Water (ft):	9.66	C. Well Volume (L)	.84
E. Liquid Depth (ft) (A-B)	5.25	E. Three Well Volumes (L)	2.52

Parameter	Beginning	1	2	3	4	5
Time (min.)	1500	1505	1510	1515	1520	1525
Depth to Water (ft)	9.66	9.72	9.68	9.80	9.75	9.76
Purge Rate (l/min)	0.2	0.2	0.2	0.2	0.2	0.2
Volume Purged (L)	–	1.0	2.0	3.0	4.0	5.0
pH	5.64	5.20	5.43	5.55	5.60	5.62
Temperature (°C)	13.22	13.31	13.63	14.99	13.27	12.55
Conductivity (μmhos/cm)	47	42	48	50	50	48
Dissolved Oxygen (mg/L)	5.73	5.29	4.58	3.55	2.92	3.41
Turbidity (NTU)	3.5	2.9	3.4	1.0	1.0	15.8
eH (mV)	3.9	8.7	13.9	24.7	26.4	24.6

Total Quantity of Water Removed (L):			
Samplers:	JCG & SVC	Sampling Time (Start/End):	1705
Sampling Date:	6/15/99	Decontamination Fluids Used:	alconox isopropyl alcohol DI
Sample Type:	GRAB	Sample Preservatives:	HCl
Sample Bottle IDs:	FF-MW-62		
Sample Parameters:	BTEX; MTBE; TPH-GRO; TPH-DRO; ~~Fe, Mn, Con~~ SVOC		
Comments and Observations:			

EA Engineering, Science, and Technology

FIELD RECORD OF WELL GAUGING, PURGING, AND SAMPLING (OVERFLOW PAGE)

Site Name:	Fuel Farm	Project Number:	2960-35	Date:	6/15/99
Well ID:	MW-62	Field Personnel:	JCG + SVC		

Parameter	6	7	8	9	10	11
Time (min.)	1530	~~1540~~ 1535	1545	1545	1550	1555
Depth to Water (ft)	9.73	9.80	9.72	9.70	9.68	9.68
Purge Rate (gpm)	0.2	0.2	0.2	0.2	0.2	0.2
Volume Purged (L)	6	7	8	9	10	11
pH	5.57	5.55	5.62	5.64	5.64	5.64
Temperature (°C)	12.72	12.70	11.00	12.78	13.85	15.19
Conductivity (μmhos/cm)	54	55	54	59	59	59
Dissolved Oxygen (mg/L)	2.49	3.94	1.83	1.55	2.39	2.09
Turbidity (NTU)	10.5	14.0	2.0	5.1	3.4	4.3
eH (mV)	30.0	27.8	44.7	27.4	34.0	33.2

Parameter	12	13	14	15	16	17
Time (min.)	1600	1605	1610	1615	1620	1625
Depth to Water (ft)	9.72	9.76	9.75	9.70	9.74	9.74
Purge Rate (gpm)	0.2	0.2	0.2	0.2	0.2	0.2
Volume Purged (L)	12	13	14	15	16	17
pH	4.11	5.27	5.49	5.56	5.58	3.86
Temperature (°C)	12.69	14.09	13.54	14.40	15.88	14.00
Conductivity (μmhos/cm)	59	63	60	64	63	60
Dissolved Oxygen (mg/L)	2.28	1.79	2.42	2.15	2.35	2.57
Turbidity (NTU)	6.6	8.1	4.5	4.9	9.3	5.6
eH (mV)	33.3	31.1	31.1	36.5	31.3	34.3

Comments and Observations:

EA Engineering, Science, and Technology

FIELD RECORD OF WELL GAUGING, PURGING, AND SAMPLING (OVERFLOW PAGE)

Site Name:	Fuel Farm	Project Number:	29600.35	Date:	6/15/91
Well ID:	MW-62	Field Personnel:	JCG+SVC		

Parameter	18 (6) 18	7 (19)	8 (20)	9 (21)	10 (22)	11 (23)
Time (min.)	1630	1635	1640	1643 ~~1645~~	1646 ~~1650~~	1650
Depth to Water (ft)	9.73	9.74	~~9.9~~ 9.75	9.74	9.75	9.73
Purge Rate (gpm)	0.2	0.2	0.2	0.2	0.2	0.2
Volume Purged (L)	18	19	20	20.6	20.9	22.0
pH	5.40	5.53	5.56	5.58	5.59	5.60
Temperature (°C)	14.03	14.76	13.85	13.28	13.14	13.34
Conductivity (μmhos/cm)	61	61	61	60	60	59
Dissolved Oxygen (mg/L)	2.17	2.60	2.23	2.21	2.26	2.16
Turbidity (NTU)	6.8	9.7	4.9	5.2	4.3	4.8
eH (mV)	45.6	32.0	34.7	36.7	24.9	43.1

Parameter	~~12~~ 24	~~13~~ 24	~~14~~ 25	15	16	17
Time (min.)	~~1700~~	1655	1700			
Depth to Water (ft)		~~14.~~ 9.75				
Purge Rate (gpm)		0.2	0.2			
Volume Purged (L)		23.	24			
pH		5.61	5.61			
Temperature (°C)		14.07	13.99			
Conductivity (μmhos/cm)		60	62			
Dissolved Oxygen (mg/L)		2.29	2.08			
Turbidity (NTU)		3.5	5.0			
eH (mV)		49.0	48.7			

Comments and Observations:

EA Engineering, Science, and Technology

FIELD RECORD OF WELL GAUGING, PURGING, AND SAMPLING

Site Name:	Fuel Farm	Project Number:	29600.35
Well ID:	MW-213	Well Lock Status:	Locked
Well Condition:	OK	Weather:	Sunny - 60's +

Gauge Date:	6/16/99	Gauge Time:	9:30
Sounding Method:	Water level indicator	Measurement Ref:	Mark on PVC
Stick Up/Down (ft):	~ 2.5' agg	Well Diameter (in.):	2" ID

Purge Date:	6/16/99	Purge Time:	Start 9:45
Purge Method:	Subm. Pump	Field Personnel:	JG / PH
Ambient Air VOCs (ppm):	Start: 0 End: 0	Well Mouth VOCs (ppm):	Start: 606 End: 0

WELL VOLUME

A. Well Depth (ft):		D. Well Volume/ft (L):	
B. Depth to Water (ft):	6.59	E. Well Volume (L) (C*D):	
C. Liquid Depth (ft) (A-B)		F. Three Well Volumes (L)	

Parameter	Beginning	1	2	3	4	5
Time (min.)	9:45	9:50	9:55	10:00	10:05	10:10
Depth to Water (ft)	6.63	6.65	6.65	6.65	6.65	6.65
Purge Rate (gpm)	200ml	200ml	200ml	200ml	200ml	200ml
Volume Purged (L)	200ml	1000	1000	1000	1000	1000
PH	5.25	5.29	5.30	5.28	5.27	5.27
Temperature (°C)	14.06	15.00	16.11	17.68	17.00	16.62
Conductivity (μmhos/cm)	36.0	37.0	41.0	42.0	39.00	38.00
Dissolved Oxygen (mg/L)	4.09	4.34	4.25	4.20	4.18	4.02
Turbidity (NTU)	3.7	0.4	0.0	0.3	0.2	0.0
eH (mV)	253	250.5	248.0	244.6	244.8	244.5

Total Quantity of Water Removed (L): 5.2 L

Samplers:	PH/JG	Sampling Time (Start/End):	~~9:45~~ 1015 — 10:35
Sampling Date:	6-16-99	Decontamination Fluids Used:	DI
Sample Type:	Grab	Sample Preservatives:	HCL
Sample Bottle IDs:	FF MW 213 MS/MSD, FF MW 213		
Sample Parameters:	$VOC - GRO / DRO		

EA Engineering, Science, and Technology

FIELD RECORD OF WELL GAUGING, PURGING, AND SAMPLING

Site Name:	Fuel Farm	Project Number:	29600.35
Well ID:	WP-1	Well Lock Status:	Not Locked
Well Condition:	OK	Weather:	Cloudy, cool 60's

Gauge Date:	6/14/99	Gauge Time:	1019
Sounding Method:	Water level Indicator	Measurement Ref:	TOC
Stick Up/Down (ft):	-	Well Diameter (in.):	2"

Purge Date:	6/17/99	Purge Time:	10 Minutes
Purge Method:	Isco Pump	Field Personnel:	JG / PH
Ambient Air VOCs (ppm):	0	Well Mouth VOCs (ppm):	0

WELL VOLUME

A. Well Depth (ft):	8.23	D. Well Volume/ft (L):	
B. Depth to Water (ft):	5.62	C. Well Volume (L)	
E. Liquid Depth (ft) (A-B)		E. Three Well Volumes (L)	

Parameter	Beginning	1	2	3	4	5
Time (min.)	81019					
Depth to Water (ft)	5.62					
Purge Rate (l/min)	—					
Volume Purged (L)	—					
pH	5.58					
Temperature (°C)	13.85					
Conductivity (μmhos/cm)	386					
Dissolved Oxygen (mg/L)	11.43					
Turbidity (NTU)	—					
eH (mV)	166					

Total Quantity of Water Removed (L):	~ ~~7~~ liter ~ 2.4 liters		
Samplers:	PH / JG	Sampling Time (Start/End):	13:30 / 1345
Sampling Date:	6/17/99	Decontamination Fluids Used:	DI / Alconox
Sample Type:	GRAB	Sample Preservatives:	HCL
Sample Bottle IDs:	FF-WP-1		
Sample Parameters:	VOC - BTEX, TPH - GRO / DRO, Fe, Mn		
Comments and Observations:			

EA Engineering, Science, and Technology

FIELD RECORD OF WELL GAUGING, PURGING, AND SAMPLING

Site Name:	Fuel Farm	Project Number:	29600.35
Well ID:	WP-2	Well Lock Status:	N.A.
Well Condition:	OK	Weather:	Cloudy / Cool 60°F±

Gauge Date:	6/17/99	Gauge Time:	1112
Sounding Method:	Water level Indicator	Measurement Ref:	TOC
Stick Up/Down (ft):		Well Diameter (in.):	2"

Purge Date:	6/17/99	Purge Time:	5 Min
Purge Method:	Isco Pump	Field Personnel:	PH / JG
Ambient Air VOCs (ppm):	0	Well Mouth VOCs (ppm):	200.

WELL VOLUME

A. Well Depth (ft):	8.22	D. Well Volume/ft (L):	
B. Depth to Water (ft):	6.79	C. Well Volume (L)	
E. Liquid Depth (ft) (A-B)		E. Three Well Volumes (L)	

Parameter	Beginning	1	2	3	4	5
Time (min.)	0917					
Depth to Water (ft)	6.79					
Purge Rate (l/min)	—					
Volume Purged (L)	—					
pH	5.84					
Temperature (°C)	17.44					
Conductivity (μmhos/cm)	148					
Dissolved Oxygen (mg/L)	6.62					
Turbidity (NTU)	—					
eH (mV)	132					

Total Quantity of Water Removed (L):	~25L		
Samplers:	SVK/JG	Sampling Time (Start/End):	0755
Sampling Date:	6/18	Decontamination Fluids Used:	DI
Sample Type:	Grab	Sample Preservatives:	HCl
Sample Bottle IDs:	FFWP02		
Sample Parameters:	VOC BTEX/MTBE, TPH DRO/GRO		
Comments and Observations:			

EA Engineering, Science, and Technology

FIELD RECORD OF WELL GAUGING, PURGING, AND SAMPLING

Site Name:	Fuel Farm	Project Number:	29600.35
Well ID:	WP-3	Well Lock Status:	N.A.
Well Condition:	OK	Weather:	Cloudy / Cool 60±

Gauge Date:	6/14/99	Gauge Time:	1013
Sounding Method:	Water level Indicator	Measurement Ref:	TOC
Stick Up/Down (ft):		Well Diameter (in.):	2"

Purge Date:	6/17/99	Purge Time:	0819
Purge Method:	Isco Pump	Field Personnel:	PH / JG
Ambient Air VOCs (ppm):	0	Well Mouth VOCs (ppm):	0

WELL VOLUME

A. Well Depth (ft):	7.60	D. Well Volume/ft (L):	
B. Depth to Water (ft):	4.81	C. Well Volume (L)	
E. Liquid Depth (ft) (A-B)		E. Three Well Volumes (L)	

Parameter	Beginning	1	2	3	4	5
Time (min.)	0819					
Depth to Water (ft)	4.81					
Purge Rate (l/min)	–					
Volume Purged (L)	–					
pH	5.82					
Temperature (°C)	14.64					
Conductivity (μmhos/cm)	40					
Dissolved Oxygen (mg/L)	4.13					
Turbidity (NTU)	—					
eH (mV)	174					

Total Quantity of Water Removed (L):	~7 liters		
Samplers:	PH / JG	Sampling Time (Start/End):	1300 / 1320
Sampling Date:	6-17-99	Decontamination Fluids Used:	
Sample Type:	GRAB	Sample Preservatives:	HCL
Sample Bottle IDs:	FF-WP-03	FF-WP-03 MS/MSD	
Sample Parameters:	VOC-BTEX, TPH GRO/DRO	FE/MN	

Comments and Observations:
MS & MSD collected here.

EA Engineering, Science, and Technology

FIELD RECORD OF WELL GAUGING, PURGING, AND SAMPLING

Site Name:	Fuel Farm	Project Number:	29600.35
Well ID:	WP-6	Well Lock Status:	N.A.
Well Condition:	OK	Weather:	Cloudy / Cool 60±

Gauge Date:	6/14/99	Gauge Time:	1118
Sounding Method:	INTERFACE PROBE	Measurement Ref:	TOC
Stick Up/Down (ft):		Well Diameter (in.):	2"

Purge Date:	6/17/99	Purge Time:	0830
Purge Method:	ISCO Pump	Field Personnel:	PM / JG
Ambient Air VOCs (ppm):	0	Well Mouth VOCs (ppm):	0

WELL VOLUME

A. Well Depth (ft):	7.68	D. Well Volume/ft (L):	
B. Depth to Water (ft):	5.84	C. Well Volume (L)	
E. Liquid Depth (ft) (A-B)		E. Three Well Volumes (L)	

Parameter	Beginning	1	2	3	4	5
Time (min.)	1118					
Depth to Water (ft)	5.84					
Purge Rate (l/min)	—					
Volume Purged (L)	—					
pH	5.60					
Temperature (°C)	13.94					
Conductivity (μmhos/cm)	74					
Dissolved Oxygen (mg/L)	4.23					
Turbidity (NTU)	—					
eH (mV)	146					

Total Quantity of Water Removed (L):	~2.5 liters		
Samplers:	PM / JG	Sampling Time (Start/End):	1350 / 1405
Sampling Date:	6-17-99	Decontamination Fluids Used:	DI / Alconox
Sample Type:	GRAB	Sample Preservatives:	HCL
Sample Bottle IDs:	FF-WP-6		
Sample Parameters:	VOC-BTEX, TPH-GRO / DRO, FE / MN		
Comments and Observations:			

EA Engineering, Science, and Technology

FIELD RECORD OF WELL GAUGING, PURGING, AND SAMPLING

Site Name:	Fuel Farm	Project Number:	29600.35
Well ID:	WP-7	Well Lock Status:	NA
Well Condition:	OK	Weather:	Cloudy / Cool 60±

Gauge Date:	6/14/99	Gauge Time:	1108
Sounding Method:	INTERFACE PROBE	Measurement Ref:	TOC
Stick Up/Down (ft):		Well Diameter (in.):	2"

Purge Date:	6/17/99	Purge Time:	0836
Purge Method:	ISCO Pump	Field Personnel:	PH / JG
Ambient Air VOCs (ppm):	0	Well Mouth VOCs (ppm):	

WELL VOLUME

A. Well Depth (ft):	7.70	D. Well Volume/ft (L):	
B. Depth to Water (ft):	5.30	C. Well Volume (L)	
E: Liquid Depth (ft) (A-B)		E. Three Well Volumes (L)	

Parameter	Beginning	1	2	3	4	5
Time (min.)	1108					
Depth to Water (ft)	5.30					
Purge Rate (l/min)	–					
Volume Purged (L)	–					
pH	5.61					
Temperature (°C)	15.59					
Conductivity (μmhos/cm)	207					
Dissolved Oxygen (mg/L)	8.05					
Turbidity (NTU)	–					
eH (mV)	131					

Total Quantity of Water Removed (L):	~ 2.5 Liters		
Samplers:	PH / JG	Sampling Time (Start/End):	1410 / 1420
Sampling Date:	6/17/99	Decontamination Fluids Used:	DI / Alconox
Sample Type:	GRAB	Sample Preservatives:	HCL
Sample Bottle IDs:	FF-WP-7		
Sample Parameters:	VOC-BTEX, TPH GRO/DRO, FE, MN		
Comments and Observations:			

EA Engineering, Science, and Technology

FIELD RECORD OF WELL GAUGING, PURGING, AND SAMPLING

Site Name:	Fuel Farm	Project Number:	29600.35
Well ID:	WP-10	Well Lock Status:	N.A.
Well Condition:	OK	Weather:	Cloudy / Cool 60±

Gauge Date:	6/17/99	Gauge Time:	1026
Sounding Method:	INTERFACE PROBE	Measurement Ref:	TOC
Stick Up/Down (ft):		Well Diameter (in.):	2"

Purge Date:	6/17/99	Purge Time:	0940
Purge Method:	ISCO Pump	Field Personnel:	PH / JG
Ambient Air VOCs (ppm):	0	Well Mouth VOCs (ppm):	

WELL VOLUME

A. Well Depth (ft):	7.87	D. Well Volume/ft (L):	
B. Depth to Water (ft):	6.01	C. Well Volume (L)	
E. Liquid Depth (ft) (A-B)		E. Three Well Volumes (L)	

Parameter	Beginning	1	2	3	4	5
Time (min.)	1026					
Depth to Water (ft)	6.01					
Purge Rate (l/min)	—					
Volume Purged (L)	—					
pH	5.52					
Temperature (°C)	11.60					
Conductivity (μmhos/cm)	98					
Dissolved Oxygen (mg/L)	6.54					
Turbidity (NTU)	—					
eH (mV)	167					

Total Quantity of Water Removed (L):	~ 2.5 Liters		
Samplers:	PH / JG	Sampling Time (Start/End):	1425 / 1500
Sampling Date:	6-17-99	Decontamination Fluids Used:	DI / Alconox
Sample Type:	GRAB	Sample Preservatives:	HCL
Sample Bottle IDs:	FF-WP-10		
Sample Parameters:	VOC-BTEX, TPH GRO / DRO FE, MN		
Comments and Observations:			

EA Engineering, Science, and Technology

FIELD RECORD OF WELL GAUGING, PURGING, AND SAMPLING

Site Name:	Fuel Farm	Project Number:	29600.35
Well ID:	WP-16R	Well Lock Status:	NA
Well Condition:		Weather:	Cloudy / Cool 60±

Gauge Date:	6/14/99	Gauge Time:	1137
Sounding Method:	Interface Probe	Measurement Ref:	TOC
Stick Up/Down (ft):		Well Diameter (in.):	1"

Purge Date:	6/17/99	Purge Time:	0844
Purge Method:	ISCO Pump	Field Personnel:	PH / JG
Ambient Air VOCs (ppm):	0	Well Mouth VOCs (ppm):	0

WELL VOLUME

A. Well Depth (ft):	13.65	D. Well Volume/ft (L):	
B. Depth to Water (ft):	8.15	C. Well Volume (L)	
E. Liquid Depth (ft) (A-B)		E. Three Well Volumes (L)	

Parameter	Beginning	1	2	3	4	5
Time (min.)	1137					
Depth to Water (ft)	8.15					
Purge Rate (l/min)	—					
Volume Purged (L)	—					
pH						
Temperature (°C)	17.76					
Conductivity (μmhos/cm)	2546					
Dissolved Oxygen (mg/L)	8.53					
Turbidity (NTU)	—					
eH (mV)	-71					

Total Quantity of Water Removed (L):	~ 2.5 Liter		
Samplers:	PH / JG	Sampling Time (Start/End):	1510 / 1525
Sampling Date:	6-17-99	Decontamination Fluids Used:	DI / ALCONOX
Sample Type:	GRAB	Sample Preservatives:	HCL
Sample Bottle IDs:	FF-WP-16R		
Sample Parameters:	VOC-BTEX, TPH-GRO/DRO FE, MN		
Comments and Observations:			

EA Engineering, Science, and Technology

FIELD RECORD OF WELL GAUGING, PURGING, AND SAMPLING

Site Name:	Fuel Farm	Project Number:	29600.35
Well ID:	WP-17R	Well Lock Status:	N.A.
Well Condition:	OK	Weather:	Cloudy / Cool 60±

Gauge Date:	6/14/99	Gauge Time:	1151
Sounding Method:	Interface Probe	Measurement Ref:	TOC
Stick Up/Down (ft):		Well Diameter (in.):	1"

Purge Date:	6/17/99	Purge Time:	0854
Purge Method:	ISCO Pump	Field Personnel:	PH / JG
Ambient Air VOCs (ppm):	0	Well Mouth VOCs (ppm):	

WELL VOLUME

A. Well Depth (ft):	19.15	D. Well Volume/ft (L):	
B. Depth to Water (ft):	8.14	C. Well Volume (L)	
E. Liquid Depth (ft) (A-B)		E. Three Well Volumes (L)	

Parameter	Beginning	1	2	3	4	5
Time (min.)	1151					
Depth to Water (ft)	8.14					
Purge Rate (l/min)	—					
Volume Purged (L)	—					
pH	10.34					
Temperature (°C)	16.35					
Conductivity (μmhos/cm)	269					
Dissolved Oxygen (mg/L)	10.28					
Turbidity (NTU)	—					
eH (mV)	-47					

Total Quantity of Water Removed (L):	~ 2.5 Liters		
Samplers:	PH / JG	Sampling Time (Start/End):	1530 / 1600
Sampling Date:	6-17-99	Decontamination Fluids Used:	DI Alconox
Sample Type:	GRAB	Sample Preservatives:	HCL
Sample Bottle IDs:	FF-WP-17R		
Sample Parameters:	VOC-BTEX, TPH-GRO/DRO, FE, MN		
Comments and Observations:			

EA Engineering, Science, and Technology

FIELD RECORD OF WELL GAUGING, PURGING, AND SAMPLING

Site Name:	Fuel Farm	Project Number:	29600.35
Well ID:	WP-21	Well Lock Status:	N.A.
Well Condition:	OK	Weather:	Cool / Cloudy 60±

Gauge Date:	6/14/99		
Sounding Method:	Interface Probe	Gauge Time:	1206
Stick Up/Down (ft):		Measurement Ref:	TOC
		Well Diameter (in.):	1"

Purge Date:	6/17/99		
Purge Method:	ISCO Pump	Purge Time:	0932
Ambient Air VOCs (ppm):	0	Field Personnel:	PH / JG
		Well Mouth VOCs (ppm):	

WELL VOLUME

A. Well Depth (ft):	13.0	D. Well Volume/ft (L):	
B. Depth to Water (ft):	6.83	C. Well Volume (L)	
E. Liquid Depth (ft) (A-B)		E. Three Well Volumes (L)	

Parameter	Beginning	1	2	3	4	5
Time (min.)	1206					
Depth to Water (ft)	6.83					
Purge Rate (l/min)	—					
Volume Purged (L)	—					
pH	8.07					
Temperature (°C)	16.19					
Conductivity (μmhos/cm)	236					
Dissolved Oxygen (mg/L)	13.46					
Turbidity (NTU)	—					
eH (mV)	40					

Total Quantity of Water Removed (L): ~25L

Samplers:	SK, JG	Sampling Time (Start/End):	0835
Sampling Date:	6/18/99	Decontamination Fluids Used:	DI
Sample Type:	Grab	Sample Preservatives:	HCl
Sample Bottle IDs:	FFWP-21, FFWPXD1		
Sample Parameters:	VOC BTEX/MTBE, TPH DRO/GRO		

Comments and Observations:

EA Engineering, Science, and Technology

FIELD RECORD OF WELL GAUGING, PURGING, AND SAMPLING

Site Name:	Fuel Farm	Project Number:	29600.35
Well ID:	WP-22	Well Lock Status:	N.A
Well Condition:	OK	Weather:	Cloudy / P. Cloudy

Gauge Date:	6-14-99	Gauge Time:	
Sounding Method:		Measurement Ref:	TOC
Stick Up/Down (ft):		Well Diameter (in.):	1"

Purge Date:	6-17-99	Purge Time:	
Purge Method:	ISCO Pump	Field Personnel:	
Ambient Air VOCs (ppm):	0	Well Mouth VOCs (ppm):	

WELL VOLUME

A. Well Depth (ft):		D. Well Volume/ft (L):	
B. Depth to Water (ft):		C. Well Volume (L)	
E. Liquid Depth (ft) (A-B)		E. Three Well Volumes (L)	

Parameter	Beginning	1	2	3	4	5
Time (min.)	1158					
Depth to Water (ft)	6.90					
Purge Rate (l/min)	—					
Volume Purged (L)	—					
pH	10.70					
Temperature (°C)	15.82					
Conductivity (μmhos/cm)	11.53					
Dissolved Oxygen (mg/L)	2.86					
Turbidity (NTU)	—					
eH (mV)	-50					

Total Quantity of Water Removed (L):	~2.5 Liters		
Samplers:	PH / JG	Sampling Time (Start/End):	1605 *
Sampling Date:	6-17-99	Decontamination Fluids Used:	DI / ALCONOX
Sample Type:	GRAB	Sample Preservatives:	HCL
Sample Bottle IDs:	FF-WP-22		
Sample Parameters:	VOC-BTEX TPH GRO/DRO FE MN		

Comments and Observations: * not enough to fill VOAs and one amber. Let recharge overnight and fill remaining sample bottles at 0908 on 6/18/99

Appendix E

Laboratory Report
Chemical Analysis of Ground Water

Katahdin
ANALYTICAL SERVICES

July 16, 1999

Mr. John Carnright
EA Engineering
3 Washington Center
Newburgh, NY 12550

RECEIVED
JUL 19 1999
EA Engineering, Science, & Technology, Inc.
Newburgh, NY 12550

RE: Katahdin Lab Number: WP-2947
Project ID: NASB Fuel Farm
Project Manager: Ms. Andrea J. Colby
Sample Receipt Date: June 16, 1999

Dear Mr. Carnright:

Please find enclosed the following information:

* Report of Analysis
* Quality Control Data Summary
* Confirmation
* Chain of Custody

Should you have any questions or comments concerning this Report of Analysis, please do not hesitate to contact the project manager listed above. This cover letter is an integral part of the ROA.

We appreciate your continued use of our laboratory and look forward to working with you in the future. The following signature indicates technical review and acceptance of the data.

Sincerely,

KATAHDIN ANALYTICAL SERVICES

Maria Crouch
Authorized Signature

07/16/99
Date

340 County Road No. 5
P.O. Box 720, Westbrook, ME 04098
Tel: (207) 874-2400 Fax: (207) 775-4029

http://katahdinlab.com

210 West Road No. 5, Portsmouth, NH 03801
Tel: (603) 431-5777 Fax: (603) 436-3356

Katahdin
ANALYTICAL SERVICES

July 16, 1999

Mr. John Carnright
EA Engineering
3 Washington Center
Newburgh, NY 12550

RECEIVED
JUL 19 1999
EA Engineering, Science, & Technology, Inc.
Newburgh, NY 12550

RE: Katahdin Lab Number: WP-2985
Project ID: Fuel Farm
Project Manager: Ms. Andrea J. Colby
Sample Receipt Date: June 18, 1999

Dear Mr. Carnright:

Please find enclosed the following information:

* Report of Analysis
* Quality Control Data Summary
* Confirmation
* Chain of Custody

Should you have any questions or comments concerning this Report of Analysis, please do not hesitate to contact the project manager listed above. This cover letter is an integral part of the ROA.

We appreciate your continued use of our laboratory and look forward to working with you in the future. The following signature indicates technical review and acceptance of the data.

Sincerely,

KATAHDIN ANALYTICAL SERVICES

Maria Crouch
Authorized Signature

07/16/99
Date

340 County Road No. 5
P.O. Box 720, Westbrook, ME 04098
Tel: (207) 874-2400 Fax: (207) 775-4029

210 West Road No. 5, Portsmouth, NH 03801
Tel: (603) 431-5777 Fax: (603) 436-3356

Katahdin
340 County Road No. 5
P.O. Box 720
Westbrook, ME 04098
Tel: (207) 874-2400
Fax: (207) 775-4029

CHAIN of CUSTODY

PLEASE PRINT IN PEN

Client: EA Engineering
Contact: John Cornright
Phone #: (914) 565-8100
Fax #: (914) 565-8205
Address: 3 Washington Ctr
City: Newburgh
State: NY
Zip Code: 12550
Purchase Order #:
Proj. Name / No: 29600 35 7250, 2192 Fuel Farm
Katahdin Quote #:
Bill (if different than above):
Address:
Sampler (Print / Sign): James Gatherer
Copies To:

LAB USE ONLY
WORK ORDER #: WP29887
KATAHDIN PROJECT MANAGER:
REMARKS: MAINE DEPLOP methods required for DRO and GRO.
SHIPPING INFO: ☐ FED EX ☐ UPS ☐ CLIENT
AIRBILL NO:
TEMP°C: ☐ TEMP BLANK ☐ INTACT ☐ NOT INTACT

ANALYSIS AND CONTAINER TYPE PRESERVATIVES

*	Sample Description	Date / Time coll'd	Matrix	No. of Cntrs.	BTEX/MTBE VOC 602 (Filt. ☐Y ☒N)	TPH GRO MAINE 4.2.17 (Filt. ☐Y ☒N)	TPH DRO MAINE 4.1.25 (Filt. ☐Y ☒N)	Filt. ☐Y ☐N	Filt. ☐Y ☐N	Filt. ☐Y ☐N	Filt. ☐Y ☐N	Filt. ☐Y ☐N	Filt. ☐Y ☐N	Filt. ☐Y ☐N
	FF RB1	6/15/99/0800	W	8	X	X	X							
	FF MW 51	6/15/99/0950	GW	~~8~~ 36	X	X	X							
	FF MW 46	6/15/99/1103	GW	8	X	X	X							
	FF MW 58	6/15/99/1430	GW	8	X	X	X							
	FF MW 62	6/15/99/1705	GW	8	X	X	X							
	FF MW 213 MS/MSD	6/16/99/1015	GW	24	X	X	X							
	FF MW 44	6/16/99/1145	GW	8	X	X	X							
	FF MW 61R	6/16/99/1415	GW	8	X	X	X							
	FF MW 54	6/16/99/	GW	8	X	X	X							
	FF MW XD1	6/16/99/—	GW	8	X	X	X							
	FF MW 49	6/15/99/1215	GW	8	X	X	X							
	Trip Blank	6/15/99 1000	GW	3	X									
		/												
		/												
		/												
		/												

COMMENTS: Temp Blanks included

Relinquished By: (Signature)	Date / Time	Received By: (Signature)	Relinquished By: (Signature)	Date / Time	Received By: (Signature)
	6/16/99 1011	Bill Brooks	Bill Brooks	6/16/99 5:00	06/17/99 1015
Relinquished By: (Signature)	Date / Time	Received By: (Signature)	Relinquished By: (Signature)	Date / Time	Received By: (Signature)

Katahdin
340 County Road No. 5
P.O. Box 720
Westbrook, ME 04098
Tel: (207) 874-2400
Fax: (207) 775-4029

CHAIN of CUSTODY

PLEASE PRINT IN PEN

Client: EA Engineering
Contact: John Camright
Phone #: (914) 565-8100
Fax #: (914) 565 8203
Address: 3 Washington Ctr
City: Newburgh
State: NY
Zip Code: 12550
Purchase Order #:
Proj. Name / No.: 29600 35 7250.292 Fuel Farm
Katahdin Quote #:
Bill (if different than above):
Address:
Sampler (Print / Sign): James Gathever
Copies To:

LAB USE ONLY
WORK ORDER #: WP2985
KATAHDIN PROJECT MANAGER:
REMARKS:
SHIPPING INFO: ☐ FED EX ☐ UPS ☐ CLIENT
AIRBILL NO:
TEMP°C: ☐ TEMP BLANK ☐ INTACT ☐ NOT INTACT

ANALYSIS AND CONTAINER TYPE PRESERVATIVES

*	Sample Description	Date / Time coll'd	Matrix	No. of Cntrs.	BTEX/MTBE VOC 602 (Filt. ☐Y ☑N)	TPH GRO MADE 4.2.17 (Filt. ☐Y ☑N)	TPH DRO MADE 4.1.25 (Filt. ☐Y ☑N)	Filt. ☐Y ☐N	Filt. ☐Y ☐N	Filt. ☐Y ☐N	Filt. ☐Y ☐N	Filt. ☐Y ☐N	Filt. ☐Y ☐N	Filt. ☐Y ☐N
	FF WP RB1	6/17/99/1055	W	8	X	X	X							
	FF WP 03 MS/MSD	6/17/99/1300	GW	24	X	X	X							
	FF WP 01	6/17/99/1330	GW	8	X	X	X							
	FF WP 06	6/17/99/1400	GW	8	X	X	X							
	FF WP 07	6/17/99/1415	GW	8	X	X	X							
	FF WP 10	6/17/99/1430	GW	8	X	X	X							
	FF WP 16R	6/17/99/1515	GW	8	X	X	X							
	FF WP 17R	6/17/99/1535	GW	8	X	X	X							
	FF WP 22	6/17/99/1605	GW	8	X	X	X							
	FF WP 21	6/18/99/0835	GW	8	X	X	X							
	FF WP 02	6/18/99/0755	GW	8	X	X	X							
	FF WP XD1	6/18/99/—	GW	8	X	X	X							
	TRIP BLANK	/	W	2	X									
		/												
		/												
		/												

COMMENTS: Temp Blanks included

Relinquished By: (Signature)	Date / Time	Received By: (Signature)	Relinquished By: (Signature)	Date / Time	Received By: (Signature)
	6/18 12:00	Shirley Scott			
Relinquished By: (Signature)	Date / Time	Received By: (Signature)	Relinquished By: (Signature)	Date / Time	Received By: (Signature)

Katahdin
ANALYTICAL SERVICES

CLIENT: JOHN CARNRIGHT
EA Engineering
3 Washington Center
Newburgh, NY 12550

Lab Number : WP-2985-3
Report Date: 07/16/99
PO No. : 29600.35.7250,2192
Project : FUEL FARM

REPORT OF ANALYTICAL RESULTS

SAMPLE DESCRIPTION	MATRIX	SAMPLED BY	SAMPLED DATE	RECEIVED
FF-WP-01	Aqueous	CLIENT	06/17/99	06/18/99

PARAMETER	RESULT	UNITS	DF	*PQL	METHOD	ANALYZED	BY	NOTES
Diesel Range Organics								1
Diesel Range Organics	970.	µg/L	1.0	50	MEDEP4.1.25	07/03/99	JG	
o-Terphenyl	77.	%	1.0		MEDEP4.1.25	07/03/99	JG	
Gasoline Range Organics								
Gasoline Range Organics	78.	µg/L	1.0	10	MEDEP4.2.17	06/28/99	PR	
4-Bromofluorobenzene	107.	%	1.0		MEDEP4.2.17	06/28/99	PR	
Purgeable Aromatics+MTBE								
Benzene	<0.50	µg/L	1.0	0.50	EPA 602	06/23/99	JK	
Toluene	1.7	µg/L	1.0	1.0	EPA 602	06/23/99	JK	
Ethylbenzene	<1.0	µg/L	1.0	1.0	EPA 602	06/23/99	JK	
Xylenes	<1.5	µg/L	1.0	1.5	EPA 602	06/23/99	JK	
Methyltertbutyl ether	0.70	µg/L	1.0	0.50	EPA 602	06/23/99	JK	
a,a,a-Trifluorotoluene (% Recovery)	92.	%	1.0		EPA 602	06/23/99	JK	

* PQL (Practical Quantitation Level) represents laboratory reporting limits and may not reflect sample-specific reporting limits. Sample-specific limits are indicated by results annotated with '<' values.
(1) Sample Preparation on 06/24/99 by DPD

07/16/99

LJO/mrcajc(dw)
PF24FOW0

340 County Road No. 5
P.O. Box 720, Westbrook, ME 04098
Tel: (207) 874-2400 Fax: (207) 775-4029

http://katahdinlab.com

210 West Road No. 5, Portsmouth, NH 03801
Tel: (603) 431-5777 Fax: (603) 436-3356

Katahdin
ANALYTICAL SERVICES

CLIENT: JOHN CARNRIGHT
EA Engineering
3 Washington Center
Newburgh, NY 12550

Lab Number : WP-2985-11
Report Date: 07/16/99
PO No. : 29600.35.7250,2192
Project : FUEL FARM

REPORT OF ANALYTICAL RESULTS

SAMPLE DESCRIPTION	MATRIX	SAMPLED BY	SAMPLED DATE	RECEIVED
FF-WP-02	Aqueous	CLIENT	06/18/99	06/18/99

PARAMETER	RESULT	UNITS	DF	*PQL	METHOD	ANALYZED	BY	NOTES
Diesel Range Organics								1,2
Diesel Range Organics	9600.	µg/L	5.0	50	MEDEP4.1.25	07/06/99	JG	
o-Terphenyl	68.	%	5.0		MEDEP4.1.25	07/06/99	JG	
Gasoline Range Organics								2
Gasoline Range Organics	1400.	µg/L	2	10	MEDEP4.2.17	06/29/99	PR	
4-Bromofluorobenzene	141.	%	2		MEDEP4.2.17	06/29/99	PR	
Purgeable Aromatics+MTBE								
Benzene	<0.50	µg/L	1.0	0.50	EPA 602	06/25/99	JK	
Toluene	12.	µg/L	1.0	1.0	EPA 602	06/25/99	JK	
Ethylbenzene	<1.0	µg/L	1.0	1.0	EPA 602	06/25/99	JK	
Xylenes	40.	µg/L	1.0	1.5	EPA 602	06/25/99	JK	
Methyltertbutyl ether	<0.50	µg/L	1.0	0.50	EPA 602	06/25/99	JK	
a,a,a-Trifluorotoluene (% Recovery)	80.	%	1.0		EPA 602	06/25/99	JK	

* PQL (Practical Quantitation Level) represents laboratory reporting limits and may not reflect sample-specific reporting limits. Sample-specific limits are indicated by results annotated with '<' values.
(1) Sample Preparation on 06/24/99 by DPD
(2) Sample dilution required for quantitation of one or more target analytes; therefore, standard laboratory Practical Quantitation Level (PQL) could not be achieved.

07/16/99

LJO/mrcajc(dw)
PF24FOW0

340 County Road No. 5
P.O. Box 720, Westbrook, ME 04098
Tel: (207) 874-2400 Fax: (207) 775-4029

http://katahdinlab.com

210 West Road No. 5, Portsmouth, NH 03801
Tel: (603) 431-5777 Fax: (603) 436-3356

Katahdin
ANALYTICAL SERVICES

CLIENT: JOHN CARNRIGHT
EA Engineering
3 Washington Center
Newburgh, NY 12550

Lab Number : WP-2985-1
Report Date: 07/16/99
PO No. : 29600.35.7250,2192
Project : FUEL FARM

REPORT OF ANALYTICAL RESULTS

SAMPLE DESCRIPTION	MATRIX	SAMPLED BY	SAMPLED DATE	RECEIVED
FF-WP-03	Aqueous	CLIENT	06/17/99	06/18/99

PARAMETER	RESULT	UNITS	DF	*PQL	METHOD	ANALYZED	BY	NOTES
Diesel Range Organics								1
Diesel Range Organics	140.	µg/L	1.0	50	MEDEP4.1.25	07/02/99	JG	
o-Terphenyl	81.	%	1.0		MEDEP4.1.25	07/02/99	JG	
Gasoline Range Organics								
Gasoline Range Organics	<10	µg/L	1.0	10	MEDEP4.2.17	06/28/99	PR	
4-Bromofluorobenzene	113.	%	1.0		MEDEP4.2.17	06/28/99	PR	
Purgeable Aromatics+MTBE								
Benzene	<0.50	µg/L	1.0	0.50	EPA 602	06/23/99	JK	
Toluene	<1.0	µg/L	1.0	1.0	EPA 602	06/23/99	JK	
Ethylbenzene	<1.0	µg/L	1.0	1.0	EPA 602	06/23/99	JK	
Xylenes	<1.5	µg/L	1.0	1.5	EPA 602	06/23/99	JK	
Methyltertbutyl ether	<0.50	µg/L	1.0	0.50	EPA 602	06/23/99	JK	
a,a,a-Trifluorotoluene (% Recovery)	98.	%	1.0		EPA 602	06/23/99	JK	

* PQL (Practical Quantitation Level) represents laboratory reporting limits and may not reflect sample-specific reporting limits. Sample-specific limits are indicated by results annotated with '<' values.
(1) Sample Preparation on 06/24/99 by DPD

07/16/99

LJO/mrcajc(dw)
PF24FOW0

540 County Road No. 5
P.O. Box 720, Westbrook, ME 04098
Tel: (207) 874-2400 Fax: (207) 775-4029

http://katahdinlab.com

210 West Road No. 5, Portsmouth, NH 03801
Tel: (603) 431-5777 Fax: (603) 436-3356

Katahdin
ANALYTICAL SERVICES

CLIENT: JOHN CARNRIGHT
EA Engineering
3 Washington Center
Newburgh, NY 12550

Lab Number : WP-2985-4
Report Date: 07/16/99
PO No. : 29600.35.7250,2192
Project : FUEL FARM

REPORT OF ANALYTICAL RESULTS

SAMPLE DESCRIPTION	MATRIX	SAMPLED BY	SAMPLED DATE	RECEIVED
FF-WP-06	Aqueous	CLIENT	06/17/99	06/18/99

PARAMETER	RESULT	UNITS	DF	*PQL	METHOD	ANALYZED	BY	NOTES
Diesel Range Organics								1
Diesel Range Organics	180.	µg/L	1.0	50	MEDEP4.1.25	07/03/99	JG	
o-Terphenyl	89.	%	1.0		MEDEP4.1.25	07/03/99	JG	
Gasoline Range Organics								
Gasoline Range Organics	26.	µg/L	1.0	10	MEDEP4.2.17	06/28/99	PR	
4-Bromofluorobenzene	106.	%	1.0		MEDEP4.2.17	06/28/99	PR	
Purgeable Aromatics+MTBE								2
Benzene	<0.50	µg/L	1.0	0.50	EPA 602	06/24/99	JK	
Toluene	<1.0	µg/L	1.0	1.0	EPA 602	06/24/99	JK	
Ethylbenzene	<1.0	µg/L	1.0	1.0	EPA 602	06/24/99	JK	
Xylenes	<1.5	µg/L	1.0	1.5	EPA 602	06/24/99	JK	
Methyltertbutyl ether	<0.50	µg/L	1.0	0.50	EPA 602	06/24/99	JK	
a,a,a-Trifluorotoluene (% Recovery)	MI59	%	1.0		EPA 602	06/24/99	JK	

* PQL (Practical Quantitation Level) represents laboratory reporting limits and may not reflect sample-specific reporting limits. Sample-specific limits are indicated by results annotated with '<' values.
(1) Sample Preparation on 06/24/99 by DPD
(2) "MI" denotes surrogate recovery out of criteria due to matrix interference.

07/16/99

LJO/mrcajc(dw)
PF24FOW0

Katahdin
ANALYTICAL SERVICES

CLIENT: JOHN CARNRIGHT
EA Engineering
3 Washington Center
Newburgh, NY 12550

Lab Number : WP-2985-5
Report Date: 07/16/99
PO No. : 29600.35.7250,2192
Project : FUEL FARM

REPORT OF ANALYTICAL RESULTS

SAMPLE DESCRIPTION	MATRIX	SAMPLED BY	SAMPLED DATE	RECEIVED
FF-WP-07	Aqueous	CLIENT	06/17/99	06/18/99

PARAMETER	RESULT	UNITS	DF	*PQL	METHOD	ANALYZED	BY	NOTES
Diesel Range Organics								1
Diesel Range Organics	700.	µg/L	1.0	50	MEDEP4.1.25	07/03/99	JG	
o-Terphenyl	75.	%	1.0		MEDEP4.1.25	07/03/99	JG	
Gasoline Range Organics								
Gasoline Range Organics	460.	µg/L	1.0	10	MEDEP4.2.17	06/29/99	PR	
4-Bromofluorobenzene	122.	%	1.0		MEDEP4.2.17	06/29/99	PR	
Purgeable Aromatics+MTBE								2
Benzene	<0.50	µg/L	1.0	0.50	EPA 602	06/24/99	JK	
Toluene	21.	µg/L	1.0	1.0	EPA 602	06/24/99	JK	
Ethylbenzene	<1.0	µg/L	1.0	1.0	EPA 602	06/24/99	JK	
Xylenes	2.1	µg/L	1.0	1.5	EPA 602	06/24/99	JK	
Methyltertbutyl ether	<0.50	µg/L	1.0	0.50	EPA 602	06/24/99	JK	
a,a,a-Trifluorotoluene (% Recovery)	MI72	%	1.0		EPA 602	06/24/99	JK	

* PQL (Practical Quantitation Level) represents laboratory reporting limits and may not reflect sample-specific reporting limits. Sample-specific limits are indicated by results annotated with '<' values.
(1) Sample Preparation on 06/24/99 by DPD
(2) "MI" denotes surrogate recovery out of criteria due to matrix interference.

07/16/99

LJO/mrcajc(dw)
PF24FOW0

Katahdin
ANALYTICAL SERVICES

CLIENT: JOHN CARNRIGHT
EA Engineering
3 Washington Center
Newburgh, NY 12550

Lab Number : WP-2985-6
Report Date: 07/16/99
PO No. : 29600.35.7250,2192
Project : FUEL FARM

REPORT OF ANALYTICAL RESULTS

SAMPLE DESCRIPTION	MATRIX	SAMPLED BY	SAMPLED DATE	RECEIVED
FF-WP-10	Aqueous	CLIENT	06/17/99	06/18/99

PARAMETER	RESULT	UNITS	DF	*PQL	METHOD	ANALYZED	BY	NOTES
Diesel Range Organics								1
Diesel Range Organics	500.	µg/L	1.0	50	MEDEP4.1.25	07/03/99	JG	
o-Terphenyl	76.	%	1.0		MEDEP4.1.25	07/03/99	JG	
Gasoline Range Organics								
Gasoline Range Organics	670.	µg/L	1.0	10	MEDEP4.2.17	06/29/99	PR	
4-Bromofluorobenzene	133.	%	1.0		MEDEP4.2.17	06/29/99	PR	
Purgeable Aromatics+MTBE								2
Benzene	29.	µg/L	2	0.50	EPA 602	06/24/99	JK	
Toluene	2.3	µg/L	2	1.0	EPA 602	06/24/99	JK	
Ethylbenzene	16.	µg/L	2	1.0	EPA 602	06/24/99	JK	
Xylenes	34.	µg/L	2	1.5	EPA 602	06/24/99	JK	
Methyltertbutyl ether	2.2	µg/L	2	0.50	EPA 602	06/24/99	JK	
a,a,a-Trifluorotoluene (% Recovery)	93.	%	2		EPA 602	06/24/99	JK	

* PQL (Practical Quantitation Level) represents laboratory reporting limits and may not reflect sample-specific reporting limits. Sample-specific limits are indicated by results annotated with '<' values.
(1) Sample Preparation on 06/24/99 by DPD
(2) Sample dilution required for quantitation of one or more target analytes; therefore, standard laboratory Practical Quantitation Level (PQL) could not be achieved.

07/16/99

LJO/mrcajc(dw)
PF24FOW0

340 County Road No. 5
P.O. Box 720, Westbrook, ME 04098
Tel: (207) 874-2400 Fax: (207) 775-4029

http://katahdinlab.com

210 West Road No. 5, Portsmouth, NH 03801
Tel: (603) 431-5777 Fax: (603) 436-3356

Katahdin
ANALYTICAL SERVICES

CLIENT: JOHN CARNRIGHT
EA Engineering
3 Washington Center
Newburgh, NY 12550

Lab Number : WP-2985-7
Report Date: 07/16/99
PO No. : 29600.35.7250,2192
Project : FUEL FARM

REPORT OF ANALYTICAL RESULTS

SAMPLE DESCRIPTION	MATRIX	SAMPLED BY	SAMPLED DATE	RECEIVED
FF-WP-16R	Aqueous	CLIENT	06/17/99	06/18/99

PARAMETER	RESULT	UNITS	DF	*PQL	METHOD	ANALYZED	BY	NOTES
Diesel Range Organics								1
Diesel Range Organics	500.	µg/L	1.0	50	MEDEP4.1.25	07/03/99	JG	
o-Terphenyl	81.	%	1.0		MEDEP4.1.25	07/03/99	JG	
Gasoline Range Organics								
Gasoline Range Organics	500.	µg/L	1.0	10	MEDEP4.2.17	06/29/99	PR	
4-Bromofluorobenzene	114.	%	1.0		MEDEP4.2.17	06/29/99	PR	
Purgeable Aromatics+MTBE								2
Benzene	7.6	µg/L	2	0.50	EPA 602	06/24/99	JK	
Toluene	45.	µg/L	2	1.0	EPA 602	06/24/99	JK	
Ethylbenzene	6.6	µg/L	2	1.0	EPA 602	06/24/99	JK	
Xylenes	9.8	µg/L	2	1.5	EPA 602	06/24/99	JK	
Methyltertbutyl ether	6.9	µg/L	2	0.50	EPA 602	06/24/99	JK	
a,a,a-Trifluorotoluene (% Recovery)	90.	%	2		EPA 602	06/24/99	JK	

* PQL (Practical Quantitation Level) represents laboratory reporting limits and may not reflect sample-specific reporting limits. Sample-specific limits are indicated by results annotated with '<' values.
(1) Sample Preparation on 06/24/99 by DPD
(2) Sample dilution required for quantitation of one or more target analytes; therefore, standard laboratory Practical Quantitation Level (PQL) could not be achieved.

07/16/99

LJO/mrcajc(dw)
PF24FOW0

540 County Road No. 5
P.O. Box 720, Westbrook, ME 04098
Tel: (207) 874-2400 Fax: (207) 775-4029

http://katahdinlab.com

210 West Road No. 5, Portsmouth, NH 03801
Tel: (603) 431-5777 Fax: (603) 436-3356

Katahdin
ANALYTICAL SERVICES

CLIENT: JOHN CARNRIGHT
EA Engineering
3 Washington Center
Newburgh, NY 12550

Lab Number : WP-2985-8
Report Date: 07/16/99
PO No. : 29600.35.7250,2192
Project : FUEL FARM

REPORT OF ANALYTICAL RESULTS

SAMPLE DESCRIPTION	MATRIX	SAMPLED BY	SAMPLED DATE	RECEIVED
FF-WP-17R	Aqueous	CLIENT	06/17/99	06/18/99

PARAMETER	RESULT	UNITS	DF	*PQL	METHOD	ANALYZED	BY	NOTES
Diesel Range Organics								1,2
Diesel Range Organics	3600.	µg/L	3.0	50	MEDEP4.1.25	07/06/99	JG	
o-Terphenyl	58.	%	3.0		MEDEP4.1.25	07/06/99	JG	
Gasoline Range Organics								
Gasoline Range Organics	900.	µg/L	1.0	10	MEDEP4.2.17	06/29/99	PR	
4-Bromofluorobenzene	121.	%	1.0		MEDEP4.2.17	06/29/99	PR	
Purgeable Aromatics+MTBE								
Benzene	45.	µg/L	10	0.50	EPA 602	06/23/99	JK	
Toluene	47.	µg/L	10	1.0	EPA 602	06/23/99	JK	
Ethylbenzene	<10.	µg/L	10	1.0	EPA 602	06/23/99	JK	
Xylenes	<15.	µg/L	10	1.5	EPA 602	06/23/99	JK	
Methyltertbutyl ether	<5.	µg/L	10	0.50	EPA 602	06/23/99	JK	
a,a,a-Trifluorotoluene (% Recovery)	91.	%	10		EPA 602	06/23/99	JK	

* PQL (Practical Quantitation Level) represents laboratory reporting limits and may not reflect sample-specific reporting limits. Sample-specific limits are indicated by results annotated with '<' values.
(1) Sample Preparation on 06/24/99 by DPD
(2) Sample dilution required for quantitation of one or more target analytes; therefore, standard laboratory Practical Quantitation Level (PQL) could not be achieved.

07/16/99

LJO/mrcajc(dw)
PF24FOW0

Katahdin
ANALYTICAL SERVICES

CLIENT: JOHN CARNRIGHT
EA Engineering
3 Washington Center
Newburgh, NY 12550

Lab Number : WP-2985-10
Report Date: 07/16/99
PO No. : 29600.35.7250,2192
Project : FUEL FARM

REPORT OF ANALYTICAL RESULTS

SAMPLE DESCRIPTION	MATRIX	SAMPLED BY	SAMPLED	DATE RECEIVED
FF-WP-21	Aqueous	CLIENT	06/18/99	06/18/99

PARAMETER	RESULT	UNITS	DF	*PQL	METHOD	ANALYZED	BY	NOTES
Diesel Range Organics								1,2
Diesel Range Organics	1500.	µg/L	2.0	50	MEDEP4.1.25	07/06/99	JG	
o-Terphenyl	64.	%	2.0		MEDEP4.1.25	07/06/99	JG	
Gasoline Range Organics								2,3
Gasoline Range Organics	4600.	µg/L	2.5	10	MEDEP4.2.17	06/29/99	PR	
4-Bromofluorobenzene	MI212	%	2.5		MEDEP4.2.17	06/29/99	PR	
Purgeable Aromatics+MTBE								2
Benzene	35.	µg/L	25	0.50	EPA 602	06/24/99	JK	
Toluene	85.	µg/L	25	1.0	EPA 602	06/24/99	JK	
Ethylbenzene	120.	µg/L	25	1.0	EPA 602	06/24/99	JK	
Xylenes	750.	µg/L	25	1.5	EPA 602	06/24/99	JK	
Methyltertbutyl ether	<13.	µg/L	25	0.50	EPA 602	06/24/99	JK	
a,a,a-Trifluorotoluene (% Recovery)	101.	%	25		EPA 602	06/24/99	JK	

* PQL (Practical Quantitation Level) represents laboratory reporting limits and may not reflect sample-specific reporting limits. Sample-specific limits are indicated by results annotated with '<' values.
(1) Sample Preparation on 06/24/99 by DPD
(2) Sample dilution required for quantitation of one or more target analytes; therefore, standard laboratory Practical Quantitation Level (PQL) could not be achieved.
(3) "MI" denotes surrogate recovery out of criteria due to matrix interference.

07/16/99

LJO/mrcajc(dw)
PF24FOW0

Katahdin
ANALYTICAL SERVICES

CLIENT: JOHN CARNRIGHT
EA Engineering
3 Washington Center
Newburgh, NY 12550

Lab Number : WP-2985-12
Report Date: 07/16/99
PO No. : 29600.35.7250,2192
Project : FUEL FARM

REPORT OF ANALYTICAL RESULTS

SAMPLE DESCRIPTION	MATRIX	SAMPLED BY	SAMPLED DATE	RECEIVED
FF-WP-XD1	Aqueous	CLIENT	06/18/99	06/18/99

PARAMETER	RESULT	UNITS	DF	*PQL	METHOD	ANALYZED	BY	NOTES
Diesel Range Organics								1
Diesel Range Organics	1400.	µg/L	1.0	50	MEDEP4.1.25	07/03/99	JG	
o-Terphenyl	68.	%	1.0		MEDEP4.1.25	07/03/99	JG	
Gasoline Range Organics								2,3
Gasoline Range Organics	4800.	µg/L	5	10	MEDEP4.2.17	07/01/99	PR	
4-Bromofluorobenzene	MI159.	%	5		MEDEP4.2.17	07/01/99	PR	
Purgeable Aromatics+MTBE								
Benzene	30.	µg/L	10	0.50	EPA 602	06/24/99	JK	
Toluene	67.	µg/L	10	1.0	EPA 602	06/24/99	JK	
Ethylbenzene	100.	µg/L	10	1.0	EPA 602	06/24/99	JK	
Xylenes	630.	µg/L	10	1.5	EPA 602	06/24/99	JK	
Methyltertbutyl ether	<5.	µg/L	10	0.50	EPA 602	06/24/99	JK	
a,a,a-Trifluorotoluene (% Recovery)	98.	%	10		EPA 602	06/24/99	JK	

* PQL (Practical Quantitation Level) represents laboratory reporting limits and may not reflect sample-specific reporting limits. Sample-specific limits are indicated by results annotated with '<' values.
(1) Sample Preparation on 06/24/99 by DPD
(2) Sample dilution required for quantitation of one or more target analytes; therefore, standard laboratory Practical Quantitation Level (PQL) could not be achieved.
(3) "MI" denotes surrogate recovery out of criteria due to matrix interference.

07/16/99

LJO/mrcajc(dw)
PF24FOW0

Katahdin
ANALYTICAL SERVICES

CLIENT: JOHN CARNRIGHT
EA Engineering
3 Washington Center
Newburgh, NY 12550

Lab Number : WP-2985-9
Report Date: 07/16/99
PO No. : 29600.35.7250,2192
Project : FUEL FARM

REPORT OF ANALYTICAL RESULTS

SAMPLE DESCRIPTION	MATRIX	SAMPLED BY	SAMPLED DATE	RECEIVED
FF-WP-22	Aqueous	CLIENT	06/17/99	06/18/99

PARAMETER	RESULT	UNITS	DF	*PQL	METHOD	ANALYZED	BY	NOTES
Diesel Range Organics								1,2
Diesel Range Organics	9400.	µg/L	8.0	50	MEDEP4.1.25	07/07/99	JG	
o-Terphenyl	85.	%	8.0		MEDEP4.1.25	07/07/99	JG	
Gasoline Range Organics								2
Gasoline Range Organics	2600.	µg/L	5	10	MEDEP4.2.17	06/29/99	PR	
4-Bromofluorobenzene	109.	%	5		MEDEP4.2.17	06/29/99	PR	
Purgeable Aromatics+MTBE								2
Benzene	150.	µg/L	20	0.50	EPA 602	06/23/99	JK	
Toluene	410.	µg/L	20	1.0	EPA 602	06/23/99	JK	
Ethylbenzene	67.	µg/L	20	1.0	EPA 602	06/23/99	JK	
Xylenes	340.	µg/L	20	1.5	EPA 602	06/23/99	JK	
Methyltertbutyl ether	<10.	µg/L	20	0.50	EPA 602	06/23/99	JK	
a,a,a-Trifluorotoluene (% Recovery)	93.	%	20		EPA 602	06/23/99	JK	

* PQL (Practical Quantitation Level) represents laboratory reporting limits and may not reflect sample-specific reporting limits. Sample-specific limits are indicated by results annotated with '<' values.
(1) Sample Preparation on 06/24/99 by DPD
(2) Sample dilution required for quantitation of one or more target analytes; therefore, standard laboratory Practical Quantitation Level (PQL) could not be achieved.

07/16/99

LJO/mrcajc(dw)
PF24FOW0

Katahdin
ANALYTICAL SERVICES

CLIENT: JOHN CARNRIGHT
EA Engineering
3 Washington Center
Newburgh, NY 12550

Lab Number : WP-2947-7
Report Date: 07/16/99
PO No. : 29600.35.7250,2192

WIC#: FUEL FARM

REPORT OF ANALYTICAL RESULTS

SAMPLE DESCRIPTION	MATRIX	SAMPLED BY	SAMPLED DATE	RECEIVED
FF-MW-44	Aqueous	CLIENT	06/16/99	06/16/99

PARAMETER	RESULT	UNITS	DF	*PQL	METHOD	ANALYZED	BY	NOTES
Diesel Range Organics								1
Diesel Range Organics	<50	µg/L	1.0	50	MEDEP4.1.25	07/02/99	JG	
o-Terphenyl	80.	%	1.0		MEDEP4.1.25	07/02/99	JG	
Gasoline Range Organics								
Gasoline Range Organics	<10	µg/L	1.0	10	MEDEP4.2.17	06/23/99	PR	
4-Bromofluorobenzene	110.	%	1.0		MEDEP4.2.17	06/23/99	PR	
Purgeable Aromatics+MTBE								
Benzene	<0.50	µg/L	1.0	0.50	EPA 602	06/25/99	JK	
Toluene	<1.0	µg/L	1.0	1.0	EPA 602	06/25/99	JK	
Ethylbenzene	<1.0	µg/L	1.0	1.0	EPA 602	06/25/99	JK	
Xylenes	<1.5	µg/L	1.0	1.5	EPA 602	06/25/99	JK	
Methyltertbutyl ether	<0.50	µg/L	1.0	0.50	EPA 602	06/25/99	JK	
a,a,a-Trifluorotoluene (% Recovery)	98.	%	1.0		EPA 602	06/25/99	JK	

* PQL (Practical Quantitation Level) represents laboratory reporting limits and may not reflect sample-specific reporting limits. Sample-specific limits are indicated by results annotated with '<' values.
(1) Sample Preparation on 06/22/99 by KGT

07/16/99

LJO/mrcajc(dw)
PF22FOW8

340 County Road No. 5
P.O. Box 720, Westbrook, ME 04098
Tel: (207) 874-2400 Fax: (207) 775-4029

http://katahdinlab.com

210 West Road No. 5, Portsmouth, NH 03801
Tel: (603) 431-5777 Fax: (603) 436-3356

Katahdin
ANALYTICAL SERVICES

CLIENT: JOHN CARNRIGHT
EA Engineering
3 Washington Center
Newburgh, NY 12550

Lab Number : WP-2947-4
Report Date: 07/16/99
PO No. : 29600.35.7250,2192

WIC#: FUEL FARM

REPORT OF ANALYTICAL RESULTS

SAMPLE DESCRIPTION	MATRIX	SAMPLED BY	SAMPLED	DATE RECEIVED
FF-MW-46	Aqueous	CLIENT	06/15/99	06/16/99

PARAMETER	RESULT	UNITS	DF	*PQL	METHOD	ANALYZED	BY	NOTES
Diesel Range Organics								1
Diesel Range Organics	76.	µg/L	1.0	50	MEDEP4.1.25	07/02/99	JG	
o-Terphenyl	81.	%	1.0		MEDEP4.1.25	07/02/99	JG	
Gasoline Range Organics								
Gasoline Range Organics	<10	µg/L	1.0	10	MEDEP4.2.17	06/23/99	PR	
4-Bromofluorobenzene	110.	%	1.0		MEDEP4.2.17	06/23/99	PR	
Purgeable Aromatics+MTBE								
Benzene	<0.50	µg/L	1.0	0.50	EPA 602	06/25/99	JK	
Toluene	<1.0	µg/L	1.0	1.0	EPA 602	06/25/99	JK	
Ethylbenzene	<1.0	µg/L	1.0	1.0	EPA 602	06/25/99	JK	
Xylenes	<1.5	µg/L	1.0	1.5	EPA 602	06/25/99	JK	
Methyltertbutyl ether	<0.50	µg/L	1.0	0.50	EPA 602	06/25/99	JK	
a,a,a-Trifluorotoluene (% Recovery)	95.	%	1.0		EPA 602	06/25/99	JK	

* PQL (Practical Quantitation Level) represents laboratory reporting limits and may not reflect sample-specific reporting limits. Sample-specific limits are indicated by results annotated with '<' values.
(1) Sample Preparation on 06/22/99 by KGT

07/16/99

LJO/mrcajc(dw)
PF22FOW8

Katahdin
ANALYTICAL SERVICES

CLIENT: JOHN CARNRIGHT
EA Engineering
3 Washington Center
Newburgh, NY 12550

Lab Number : WP-2947-11
Report Date: 07/16/99
PO No. : 29600.35.7250,2192

WIC#: FUEL FARM

REPORT OF ANALYTICAL RESULTS

SAMPLE DESCRIPTION	MATRIX	SAMPLED BY	SAMPLED DATE	RECEIVED
FF-MW-49	Aqueous	CLIENT	06/15/99	06/16/99

PARAMETER	RESULT	UNITS	DF	*PQL	METHOD	ANALYZED	BY	NOTES
Diesel Range Organics								1
Diesel Range Organics	86.	µg/L	1.0	50	MEDEP4.1.25	07/02/99	JG	
o-Terphenyl	80.	%	1.0		MEDEP4.1.25	07/02/99	JG	
Gasoline Range Organics								
Gasoline Range Organics	<10	µg/L	1.0	10	MEDEP4.2.17	06/24/99	PR	
4-Bromofluorobenzene	106.	%	1.0		MEDEP4.2.17	06/24/99	PR	
Purgeable Aromatics+MTBE								
Benzene	<0.50	µg/L	1.0	0.50	EPA 602	06/26/99	JK	
Toluene	3.5	µg/L	1.0	1.0	EPA 602	06/26/99	JK	
Ethylbenzene	<1.0	µg/L	1.0	1.0	EPA 602	06/26/99	JK	
Xylenes	<1.5	µg/L	1.0	1.5	EPA 602	06/26/99	JK	
Methyltertbutyl ether	<0.50	µg/L	1.0	0.50	EPA 602	06/26/99	JK	
a,a,a-Trifluorotoluene (% Recovery)	98.	%	1.0		EPA 602	06/26/99	JK	

* PQL (Practical Quantitation Level) represents laboratory reporting limits and may not reflect sample-specific reporting limits. Sample-specific limits are indicated by results annotated with '<' values.
(1) Sample Preparation on 06/22/99 by KGT

07/16/99

LJO/mrcajc(dw)
PF22FOW8

340 County Road No. 5
P.O. Box 720, Westbrook, ME 04098
Tel: (207) 874-2400 Fax: (207) 775-4029

http://katahdinlab.com

210 West Road No. 5, Portsmouth, NH 03801
Tel: (603) 431-5777 Fax: (603) 436-3356

Katahdin
ANALYTICAL SERVICES

CLIENT: JOHN CARNRIGHT
EA Engineering
3 Washington Center
Newburgh, NY 12550

Lab Number : WP-2947-3
Report Date: 07/16/99
PO No. : 29600.35.7250,2192

WIC#: FUEL FARM

REPORT OF ANALYTICAL RESULTS

SAMPLE DESCRIPTION	MATRIX	SAMPLED BY	SAMPLED DATE	RECEIVED
FF-MW-51	Aqueous	CLIENT	06/15/99	06/16/99

PARAMETER	RESULT	UNITS	DF	*PQL	METHOD	ANALYZED	BY	NOTES
Diesel Range Organics								1
Diesel Range Organics	<50	µg/L	1.0	50	MEDEP4.1.25	07/02/99	JG	
o-Terphenyl	73.	%	1.0		MEDEP4.1.25	07/02/99	JG	
Gasoline Range Organics								
Gasoline Range Organics	<10	µg/L	1.0	10	MEDEP4.2.17	06/23/99	PR	
4-Bromofluorobenzene	115.	%	1.0		MEDEP4.2.17	06/23/99	PR	
Purgeable Aromatics+MTBE								
Benzene	<0.50	µg/L	1.0	0.50	EPA 602	06/25/99	JK	
Toluene	<1.0	µg/L	1.0	1.0	EPA 602	06/25/99	JK	
Ethylbenzene	<1.0	µg/L	1.0	1.0	EPA 602	06/25/99	JK	
Xylenes	<1.5	µg/L	1.0	1.5	EPA 602	06/25/99	JK	
Methyltertbutyl ether	<0.50	µg/L	1.0	0.50	EPA 602	06/25/99	JK	
a,a,a-Trifluorotoluene (% Recovery)	100.	%	1.0		EPA 602	06/25/99	JK	

* PQL (Practical Quantitation Level) represents laboratory reporting limits and may not reflect sample-specific reporting limits. Sample-specific limits are indicated by results annotated with '<' values.
(1) Sample Preparation on 06/22/99 by KGT

07/16/99

LJO/mrcajc(dw)
PF22FOW8

Katahdin
ANALYTICAL SERVICES

CLIENT: JOHN CARNRIGHT
EA Engineering
3 Washington Center
Newburgh, NY 12550

Lab Number : WP-2947-9
Report Date: 07/16/99
PO No. : 29600.35.7250,2192

WIC#: FUEL FARM

REPORT OF ANALYTICAL RESULTS

SAMPLE DESCRIPTION	MATRIX	SAMPLED BY	SAMPLED DATE	RECEIVED
FF-MW-54	Aqueous	CLIENT	06/16/99	06/16/99

PARAMETER	RESULT	UNITS	DF	*PQL	METHOD	ANALYZED	BY	NOTES
Diesel Range Organics								1
Diesel Range Organics	67.	µg/L	1.0	50	MEDEP4.1.25	07/02/99	JG	
o-Terphenyl	78.	%	1.0		MEDEP4.1.25	07/02/99	JG	
Gasoline Range Organics								
Gasoline Range Organics	<10	µg/L	1.0	10	MEDEP4.2.17	06/24/99	PR	
4-Bromofluorobenzene	108.	%	1.0		MEDEP4.2.17	06/24/99	PR	
Purgeable Aromatics+MTBE								
Benzene	<0.50	µg/L	1.0	0.50	EPA 602	06/25/99	JK	
Toluene	<1.0	µg/L	1.0	1.0	EPA 602	06/25/99	JK	
Ethylbenzene	<1.0	µg/L	1.0	1.0	EPA 602	06/25/99	JK	
Xylenes	<1.5	µg/L	1.0	1.5	EPA 602	06/25/99	JK	
Methyltertbutyl ether	<0.50	µg/L	1.0	0.50	EPA 602	06/25/99	JK	
a,a,a-Trifluorotoluene (% Recovery)	96.	%	1.0		EPA 602	06/25/99	JK	

* PQL (Practical Quantitation Level) represents laboratory reporting limits and may not reflect sample-specific reporting limits. Sample-specific limits are indicated by results annotated with '<' values.
(1) Sample Preparation on 06/22/99 by KGT

07/16/99

LJO/mrcajc(dw)
PF22FOW8

Katahdin
ANALYTICAL SERVICES

CLIENT: JOHN CARNRIGHT
EA Engineering
3 Washington Center
Newburgh, NY 12550

Lab Number : WP-2947-10
Report Date: 07/16/99
PO No. : 29600.35.7250,2192

WIC#: FUEL FARM

REPORT OF ANALYTICAL RESULTS

SAMPLE DESCRIPTION	MATRIX	SAMPLED BY	SAMPLED DATE	RECEIVED
FF-MW-XD1	Aqueous	CLIENT	06/16/99	06/16/99

PARAMETER	RESULT	UNITS	DF	*PQL	METHOD	ANALYZED	BY	NOTES
Diesel Range Organics								1
Diesel Range Organics	82.	µg/L	1.0	50	MEDEP4.1.25	07/02/99	JG	
o-Terphenyl	88.	%	1.0		MEDEP4.1.25	07/02/99	JG	
Gasoline Range Organics								
Gasoline Range Organics	<10	µg/L	1.0	10	MEDEP4.2.17	06/24/99	PR	
4-Bromofluorobenzene	112.	%	1.0		MEDEP4.2.17	06/24/99	PR	
Purgeable Aromatics+MTBE								
Benzene	<0.50	µg/L	1.0	0.50	EPA 602	06/25/99	JK	
Toluene	<1.0	µg/L	1.0	1.0	EPA 602	06/25/99	JK	
Ethylbenzene	<1.0	µg/L	1.0	1.0	EPA 602	06/25/99	JK	
Xylenes	<1.5	µg/L	1.0	1.5	EPA 602	06/25/99	JK	
Methyltertbutyl ether	<0.50	µg/L	1.0	0.50	EPA 602	06/25/99	JK	
a,a,a-Trifluorotoluene (% Recovery)	99.	%	1.0		EPA 602	06/25/99	JK	

* PQL (Practical Quantitation Level) represents laboratory reporting limits and may not reflect sample-specific reporting limits. Sample-specific limits are indicated by results annotated with '<' values.
(1) Sample Preparation on 06/22/99 by KGT

07/16/99

LJO/mrcajc(dw)
PF22FOW8

Katahdin
ANALYTICAL SERVICES

CLIENT: JOHN CARNRIGHT
EA Engineering
3 Washington Center
Newburgh, NY 12550

Lab Number : WP-2947-5
Report Date: 07/16/99
PO No. : 29600.35.7250,2192

WIC#: FUEL FARM

REPORT OF ANALYTICAL RESULTS

SAMPLE DESCRIPTION	MATRIX	SAMPLED BY	SAMPLED DATE	RECEIVED
FF-MW-58	Aqueous	CLIENT	06/15/99	06/16/99

PARAMETER	RESULT	UNITS	DF	*PQL	METHOD	ANALYZED	BY	NOTES
Diesel Range Organics								1
Diesel Range Organics	<50	µg/L	1.0	50	MEDEP4.1.25	07/02/99	JG	
o-Terphenyl	84.	%	1.0		MEDEP4.1.25	07/02/99	JG	
Gasoline Range Organics								
Gasoline Range Organics	<10	µg/L	1.0	10	MEDEP4.2.17	06/23/99	PR	
4-Bromofluorobenzene	113.	%	1.0		MEDEP4.2.17	06/23/99	PR	
Purgeable Aromatics+MTBE								
Benzene	<0.50	µg/L	1.0	0.50	EPA 602	06/25/99	JK	
Toluene	<1.0	µg/L	1.0	1.0	EPA 602	06/25/99	JK	
Ethylbenzene	<1.0	µg/L	1.0	1.0	EPA 602	06/25/99	JK	
Xylenes	<1.5	µg/L	1.0	1.5	EPA 602	06/25/99	JK	
Methyltertbutyl ether	<0.50	µg/L	1.0	0.50	EPA 602	06/25/99	JK	
a,a,a-Trifluorotoluene (% Recovery)	100.	%	1.0		EPA 602	06/25/99	JK	

* PQL (Practical Quantitation Level) represents laboratory reporting limits and may not reflect sample-specific reporting limits. Sample-specific limits are indicated by results annotated with '<' values.
(1) Sample Preparation on 06/22/99 by KGT

07/16/99

LJO/mrcajc(dw)
PF22FOW8

Katahdin
ANALYTICAL SERVICES

CLIENT: JOHN CARNRIGHT
EA Engineering
3 Washington Center
Newburgh, NY 12550

Lab Number : WP-2947-8
Report Date: 07/16/99
PO No. : 29600.35.7250,2192

WIC#: FUEL FARM

REPORT OF ANALYTICAL RESULTS

SAMPLE DESCRIPTION	MATRIX	SAMPLED BY	SAMPLED DATE	RECEIVED
FF-MW-61R	Aqueous	CLIENT	06/16/99	06/16/99

PARAMETER	RESULT	UNITS	DF	*PQL	METHOD	ANALYZED	BY	NOTES
Diesel Range Organics								1
Diesel Range Organics	120.	µg/L	1.0	50	MEDEP4.1.25	07/02/99	JG	
o-Terphenyl	78.	%	1.0		MEDEP4.1.25	07/02/99	JG	
Gasoline Range Organics								
Gasoline Range Organics	23.	µg/L	1.0	10	MEDEP4.2.17	06/23/99	PR	
4-Bromofluorobenzene	117.	%	1.0		MEDEP4.2.17	06/23/99	PR	
Purgeable Aromatics+MTBE								
Benzene	<0.50	µg/L	1.0	0.50	EPA 602	06/25/99	JK	
Toluene	1.	µg/L	1.0	1.0	EPA 602	06/25/99	JK	
Ethylbenzene	<1.0	µg/L	1.0	1.0	EPA 602	06/25/99	JK	
Xylenes	<1.5	µg/L	1.0	1.5	EPA 602	06/25/99	JK	
Methyltertbutyl ether	0.76	µg/L	1.0	0.50	EPA 602	06/25/99	JK	
a,a,a-Trifluorotoluene (% Recovery)	99.	%	1.0		EPA 602	06/25/99	JK	

* PQL (Practical Quantitation Level) represents laboratory reporting limits and may not reflect sample-specific reporting limits. Sample-specific limits are indicated by results annotated with '<' values.
(1) Sample Preparation on 06/22/99 by KGT

07/16/99

LJO/mrcajc(dw)
PF22FOW8

Katahdin
ANALYTICAL SERVICES

CLIENT: JOHN CARNRIGHT
EA Engineering
3 Washington Center
Newburgh, NY 12550

Lab Number : WP-2947-6
Report Date: 07/16/99
PO No. : 29600.35.7250,2192

WIC#: FUEL FARM

REPORT OF ANALYTICAL RESULTS

SAMPLE DESCRIPTION	MATRIX	SAMPLED BY	SAMPLED DATE	RECEIVED
FF-MW-62	Aqueous	CLIENT	06/15/99	06/16/99

PARAMETER	RESULT	UNITS	DF	*PQL	METHOD	ANALYZED	BY	NOTES
Diesel Range Organics								
Diesel Range Organics	<50	µg/L	1.0	50	MEDEP4.1.25	07/02/99	JG	1
o-Terphenyl	80.	%	1.0		MEDEP4.1.25	07/02/99	JG	
Gasoline Range Organics								
Gasoline Range Organics	<10	µg/L	1.0	10	MEDEP4.2.17	06/23/99	PR	
4-Bromofluorobenzene	106.	%	1.0		MEDEP4.2.17	06/23/99	PR	
Purgeable Aromatics+MTBE								
Benzene	<0.50	µg/L	1.0	0.50	EPA 602	06/25/99	JK	
Toluene	<1.0	µg/L	1.0	1.0	EPA 602	06/25/99	JK	
Ethylbenzene	<1.0	µg/L	1.0	1.0	EPA 602	06/25/99	JK	
Xylenes	<1.5	µg/L	1.0	1.5	EPA 602	06/25/99	JK	
Methyltertbutyl ether	<0.50	µg/L	1.0	0.50	EPA 602	06/25/99	JK	
a,a,a-Trifluorotoluene (% Recovery)	101.	%	1.0		EPA 602	06/25/99	JK	

* PQL (Practical Quantitation Level) represents laboratory reporting limits and may not reflect sample-specific reporting limits. Sample-specific limits are indicated by results annotated with '<' values.
(1) Sample Preparation on 06/22/99 by KGT

07/16/99

LJO/mrcajc(dw)
PF22FOW8

Katahdin
ANALYTICAL SERVICES

CLIENT: JOHN CARNRIGHT
EA Engineering
3 Washington Center
Newburgh, NY 12550

Lab Number : WP-2947-1
Report Date: 07/16/99
PO No. : 29600.35.7250,2192

WIC#: FUEL FARM

REPORT OF ANALYTICAL RESULTS

SAMPLE DESCRIPTION	MATRIX	SAMPLED BY	SAMPLED DATE	RECEIVED
FF-MW-213	Aqueous	CLIENT	06/16/99	06/16/99

PARAMETER	RESULT	UNITS	DF	*PQL	METHOD	ANALYZED	BY	NOTES
Diesel Range Organics								1
Diesel Range Organics	<50	µg/L	1.0	50	MEDEP4.1.25	07/01/99	JG	
o-Terphenyl	77.	%	1.0		MEDEP4.1.25	07/01/99	JG	
Gasoline Range Organics								
Gasoline Range Organics	<10	µg/L	1.0	10	MEDEP4.2.17	06/23/99	PR	
4-Bromofluorobenzene	104.	%	1.0		MEDEP4.2.17	06/23/99	PR	
Purgeable Aromatics+MTBE								
Benzene	<0.50	µg/L	1.0	0.50	EPA 602	06/24/99	JK	
Toluene	<1.0	µg/L	1.0	1.0	EPA 602	06/24/99	JK	
Ethylbenzene	<1.0	µg/L	1.0	1.0	EPA 602	06/24/99	JK	
Xylenes	<1.5	µg/L	1.0	1.5	EPA 602	06/24/99	JK	
Methyltertbutyl ether	<0.50	µg/L	1.0	0.50	EPA 602	06/24/99	JK	
a,a,a-Trifluorotoluene (% Recovery)	102.	%	1.0		EPA 602	06/24/99	JK	

* PQL (Practical Quantitation Level) represents laboratory reporting limits and may not reflect sample-specific reporting limits. Sample-specific limits are indicated by results annotated with '<' values.
(1) Sample Preparation on 06/22/99 by KGT

07/16/99

LJO/mrcajc(dw)
PF22FOW8

Katahdin
ANALYTICAL SERVICES

CLIENT: JOHN CARNRIGHT
EA Engineering
3 Washington Center
Newburgh, NY 12550

Lab Number : WP-2985-2
Report Date: 07/16/99
PO No. : 29600.35.7250,2192
Project : FUEL FARM

REPORT OF ANALYTICAL RESULTS

SAMPLE DESCRIPTION	MATRIX	SAMPLED BY	SAMPLED DATE	RECEIVED
FF-WP-RB1	Aqueous	CLIENT	06/17/99	06/18/99

PARAMETER	RESULT	UNITS	DF	*PQL	METHOD	ANALYZED	BY	NOTES
Diesel Range Organics								1
Diesel Range Organics	250.	µg/L	1.0	50	MEDEP4.1.25	07/03/99	JG	
o-Terphenyl	74.	%	1.0		MEDEP4.1.25	07/03/99	JG	
Gasoline Range Organics								
Gasoline Range Organics	<10	µg/L	1.0	10	MEDEP4.2.17	06/28/99	PR	
4-Bromofluorobenzene	109.	%	1.0		MEDEP4.2.17	06/28/99	PR	
Purgeable Aromatics+MTBE								
Benzene	<0.50	µg/L	1.0	0.50	EPA 602	06/23/99	JK	
Toluene	<1.0	µg/L	1.0	1.0	EPA 602	06/23/99	JK	
Ethylbenzene	<1.0	µg/L	1.0	1.0	EPA 602	06/23/99	JK	
Xylenes	<1.5	µg/L	1.0	1.5	EPA 602	06/23/99	JK	
Methyltertbutyl ether	<0.50	µg/L	1.0	0.50	EPA 602	06/23/99	JK	
a,a,a-Trifluorotoluene (% Recovery)	102.	%	1.0		EPA 602	06/23/99	JK	

* PQL (Practical Quantitation Level) represents laboratory reporting limits and may not reflect sample-specific reporting limits. Sample-specific limits are indicated by results annotated with '<' values.
(1) Sample Preparation on 06/24/99 by DPD

07/16/99

LJO/mrcajc(dw)
PF24FCW0

560 County Road No. 5
P.O. Box 720, Westbrook, ME 04098
Tel: (207) 874-2400 Fax: (207) 775-4029

http://katahdinlab.com

210 West Road No. 5, Portsmouth, NH 03801
Tel: (603) 431-5777 Fax: (603) 436-3356

Katahdin
ANALYTICAL SERVICES

CLIENT: JOHN CARNRIGHT
EA Engineering
3 Washington Center
Newburgh, NY 12550

Lab Number : WP-2947-2
Report Date: 07/16/99
PO No. : 29600.35.7250,2192

WIC#: FUEL FARM

REPORT OF ANALYTICAL RESULTS

SAMPLE DESCRIPTION	MATRIX	SAMPLED BY	SAMPLED DATE	RECEIVED
FF-RB1	Aqueous	CLIENT	06/15/99	06/16/99

PARAMETER	RESULT	UNITS	DF	*PQL	METHOD	ANALYZED	BY	NOTES
Diesel Range Organics								1
Diesel Range Organics	<50	µg/L	1.0	50	MEDEP4.1.25	07/02/99	JG	
o-Terphenyl	86.	%	1.0		MEDEP4.1.25	07/02/99	JG	
Gasoline Range Organics								
Gasoline Range Organics	<10	µg/L	1.0	10	MEDEP4.2.17	06/23/99	PR	
4-Bromofluorobenzene	114.	%	1.0		MEDEP4.2.17	06/23/99	PR	
Purgeable Aromatics+MTBE								
Benzene	<0.50	µg/L	1.0	0.50	EPA 602	06/24/99	JK	
Toluene	<1.0	µg/L	1.0	1.0	EPA 602	06/24/99	JK	
Ethylbenzene	<1.0	µg/L	1.0	1.0	EPA 602	06/24/99	JK	
Xylenes	<1.5	µg/L	1.0	1.5	EPA 602	06/24/99	JK	
Methyltertbutyl ether	<0.50	µg/L	1.0	0.50	EPA 602	06/24/99	JK	
a,a,a-Trifluorotoluene (% Recovery)	98.	%	1.0		EPA 602	06/24/99	JK	

* PQL (Practical Quantitation Level) represents laboratory reporting limits and may not reflect sample-specific reporting limits. Sample-specific limits are indicated by results annotated with '<' values.
(1) Sample Preparation on 06/22/99 by KGT

07/16/99

LJO/mrcajc(dw)
PF22FOW8

Katahdin
ANALYTICAL SERVICES

CLIENT: JOHN CARNRIGHT
EA Engineering
3 Washington Center
Newburgh, NY 12550

Lab Number : WP-2985-13
Report Date: 07/16/99
PO No. : 29600.35.7250,2192
Project : FUEL FARM

REPORT OF ANALYTICAL RESULTS

SAMPLE DESCRIPTION	MATRIX	SAMPLED BY	SAMPLED DATE	RECEIVED
TRIP BLANK	Aqueous	CLIENT	06/17/99	06/18/99

PARAMETER	RESULT	UNITS	DF	*PQL	METHOD	ANALYZED	BY	NOTES
Purgeable Aromatics+MTBE								
Benzene	<0.50	µg/L	1.0	0.50	EPA 602	06/24/99	JK	
Toluene	<1.0	µg/L	1.0	1.0	EPA 602	06/24/99	JK	
Ethylbenzene	<1.0	µg/L	1.0	1.0	EPA 602	06/24/99	JK	
Xylenes	<1.5	µg/L	1.0	1.5	EPA 602	06/24/99	JK	
Methyltertbutyl ether	<0.50	µg/L	1.0	0.50	EPA 602	06/24/99	JK	
a,a,a-Trifluorotoluene (% Recovery)	101.	%	1.0		EPA 602	06/24/99	JK	

* PQL (Practical Quantitation Level) represents laboratory reporting limits and may not reflect sample-specific reporting limits. Sample-specific limits are indicated by results annotated with '<' values.

07/16/99

LJO/mrcajc(dw)

340 Conny Road No. 5
P.O. Box 720, Westbrook, ME 04098
Tel: (207) 874-2400 Fax: (207) 775-4029

http://katahdinlab.com

210 West Road No. 5, Portsmouth, NH 03801
Tel: (603) 431-5777 Fax: (603) 436-3356

Katahdin
ANALYTICAL SERVICES

Lab Number : WP-2947-12
Report Date: 07/16/99
PO No. : 29600.35.7250,2192

CLIENT: JOHN CARNRIGHT
EA Engineering
3 Washington Center
Newburgh, NY 12550

WIC#: FUEL FARM

REPORT OF ANALYTICAL RESULTS

SAMPLE DESCRIPTION	MATRIX	SAMPLED BY	SAMPLED DATE	RECEIVED
TRIP BLANK	Aqueous	CLIENT	06/15/99	06/16/99

PARAMETER	RESULT	UNITS	DF	*PQL	METHOD	ANALYZED	BY	NOTES
Purgeable Aromatics+MTBE								
Benzene	<0.50	µg/L	1.0	0.50	EPA 602	06/24/99	JK	
Toluene	<1.0	µg/L	1.0	1.0	EPA 602	06/24/99	JK	
Ethylbenzene	<1.0	µg/L	1.0	1.0	EPA 602	06/24/99	JK	
Xylenes	<1.5	µg/L	1.0	1.5	EPA 602	06/24/99	JK	
Methyltertbutyl ether	<0.50	µg/L	1.0	0.50	EPA 602	06/24/99	JK	
a,a,a-Trifluorotoluene (% Recovery)	100.	%	1.0		EPA 602	06/24/99	JK	

* PQL (Practical Quantitation Level) represents laboratory reporting limits and may not reflect sample-specific reporting limits. Sample-specific limits are indicated by results annotated with '<' values.

07/16/99

LJO/mrcajc(dw)

340 Gorrie Road No. 5
P.O. Box 720, Westbrook, ME 04098
Tel: (207) 874-2400 Fax: (207) 775-4029

http://katahdinlab.com

210 West Road No. 5, Portsmouth, NH 03801
Tel: (603) 431-5777 Fax: (603) 436-3356

Katahdin
ANALYTICAL SERVICES

RECEIVED
MAR 22 1999
EA Engineering, Science, & Technology, Inc.
Newburgh, NY 12550

March 17, 1999

Mr. John Carnright
EA Engineering
3 Washington Center
Newburgh, NY 12550

RE: Katahdin Lab Number: WP-1555
Project ID: BNAS
Project Manager: Ms. Andrea J. Colby
Sample Receipt Date: March 10, 1999

Dear Mr. Carnright:

Please find enclosed the following information:

* Report of Analysis
* Quality Control Data Summary
* Confirmation
* Chain of Custody

Should you have any questions or comments concerning this Report of Analysis, please do not hesitate to contact the project manager listed above. This cover letter is an integral part of the ROA.

We appreciate your continued use of our laboratory and look forward to working with you in the future. The following signature indicates technical review and acceptance of the data.

Sincerely,

KATAHDIN ANALYTICAL SERVICES

Mary S. Morrill
Authorized Signature

3-17-99
Date

0000001

340 County Road No. 5
P.O. Box 720, Westbrook, ME 04098
Tel: (207) 874-2400 Fax: (207) 775-4029

http://katahdinlab.com

210 West Road No.5, Portsmouth, NH 03801
Tel: (603) 431-5777 Fax: (603) 436-3356

Katahdin
ANALYTICAL SERVICES

April 21, 1999

Mr. Chris McLeod
EA Engineering
3 Washington Center
Newburgh, NY 12550

RE: Katahdin Lab Number: WP-1789
Project ID: BNAS
Project Manager: Ms. Andrea J. Colby
Sample Receipt Date: April 1, 1999

Dear Mr. McLeod:

Please find enclosed the following information:

* Report of Analysis
* Quality Control Data Summary
* Confirmation
* Chain of Custody

Should you have any questions or comments concerning this Report of Analysis, please do not hesitate to contact the project manager listed above. This cover letter is an integral part of the ROA.

We appreciate your continued use of our laboratory and look forward to working with you in the future. The following signature indicates technical review and acceptance of the data.

Sincerely,

KATAHDIN ANALYTICAL SERVICES

Mary S. Morrill
Authorized Signature

4/21/99
Date

340 County Road No. 5
P.O. Box 720, Westbrook, ME 04098
Tel: (207) 874-2400 Fax: (207) 775-4029

http://katahdinlab.com

210 West Road No. 5, Portsmouth, NH 03801
Tel: (603) 431-5777 Fax: (603) 436-3356

Katahdin
ANALYTICAL SERVICES

May 26, 1999

Mr. Chip McLeod
EA Engineering
3 Washington Center
Newburgh, NY 12550

RE: Katahdin Lab Number: WP-2253
Project ID: BNAS
Project Manager: Ms. Andrea J. Colby
Sample Receipt Date: May 3, 1999

Dear Mr. McLeod:

Please find enclosed the following information:

* Report of Analysis
* Quality Control Data Summary
* Confirmation
* Chain of Custody

Should you have any questions or comments concerning this Report of Analysis, please do not hesitate to contact the project manager listed above. This cover letter is an integral part of the ROA.

We appreciate your continued use of our laboratory and look forward to working with you in the future. The following signature indicates technical review and acceptance of the data.

Sincerely,

KATAHDIN ANALYTICAL SERVICES

Deborah J. Nadeau
Authorized Signature

5-26-99
Date

000001

340 County Road No. 5
P.O. Box 720, Westbrook, ME 04098
Tel: (207) 874-2400 Fax: (207) 775-4029

http://katahdinlab.com

210 West Road No. 5, Portsmouth, NH 03801
Tel: (603) 431-5777 Fax: (603) 436-3356

Katahdin
ANALYTICAL SERVICES

July 12, 1999

RECEIVED
JUL 14 1999

Mr. Chip McLeod
EA Engineering
3 Washington Center
Newburgh, NY 12550

RE: Katahdin Lab Number: WP-2701
Project ID: Old Fuel Farm
Project Manager: Ms. Andrea J. Colby
Sample Receipt Date: June 1, 1999

Dear Mr. McLeod:

Please find enclosed the following information:

* Report of Analysis
* Quality Control Data Summary
* Confirmation
* Chain of Custody

Should you have any questions or comments concerning this Report of Analysis, please do not hesitate to contact the project manager listed above. This cover letter is an integral part of the ROA.

We appreciate your continued use of our laboratory and look forward to working with you in the future. The following signature indicates technical review and acceptance of the data.

Sincerely,

KATAHDIN ANALYTICAL SERVICES

Maria Crouch
Authorized Signature

07/12/99
Date

340 County Road No. 5
P.O. Box 720, Westbrook, ME 04098
Tel: (207) 874-2400 Fax: (207) 775-4029

210 West Road No. 5, Portsmouth, NH 03801
Tel: (603) 431-5777 Fax: (603) 436-3356

Katahdin
ANALYTICAL SERVICES

RECEIVED
JUL 26 1999
EA Engineering, Science, & Technology, Inc.
Newburgh, NY 12550

July 20, 1999

Mr. Chip McLeod
EA Engineering
3 Washington Center
Newburgh, NY 12550

RE: Katahdin Lab Number: WP-3143
Project ID: Fuel Farm
Project Manager: Ms. Andrea J. Colby
Sample Receipt Date: July 1, 1999

Dear Mr. McLeod:

Please find enclosed the following information:

* Report of Analysis
* Quality Control Data Summary
* Confirmation
* Chain of Custody

Should you have any questions or comments concerning this Report of Analysis, please do not hesitate to contact the project manager listed above. This cover letter is an integral part of the ROA.

We appreciate your continued use of our laboratory and look forward to working with you in the future. The following signature indicates technical review and acceptance of the data.

Sincerely,

KATAHDIN ANALYTICAL SERVICES

Maria Crouch
Authorized Signature

07/21/99
Date

340 County Road No. 5
P.O. Box 720, Westbrook, ME 04098
Tel: (207) 874-2400 Fax: (207) 775-4029

210 West Road No. 5, Portsmouth, NH 03801
Tel: (603) 431-5777 Fax: (603) 436-3356

Katahdin
ANALYTICAL SERVICES
340 County Road No. 5
P.O. Box 720
Westbrook, ME 04098
Tel: (207) 874-2400
Fax: (207) 775-4029

CHAIN of CUSTODY

PLEASE PRINT IN PEN

Client: EA ENGINEERING
Contact: BARTT BOOZ
Phone #: (207) 798 5977
Fax #: (207) 798 4636
Address:
City:
State:
Zip Code:
Purchase Order #:
Proj. Name / No.: 29600.35.5324
Katahdin Quote #:
Bill (if different than above): 3 WASHINGTON CENTER
Address: NEWBURGH NY 12550
Sampler (Print / Sign): BARTT BOOZ Bartt C Booz
Copies To:

LAB USE ONLY
WORK ORDER #: WP1555
KATAHDIN PROJECT MANAGER:

REMARKS:

SHIPPING INFO: ☐ FED EX ☐ UPS ☐ CLIENT
AIRBILL NO:
TEMP°C: ☐ TEMP BLANK ☐ INTACT ☐ NOT INTACT

ANALYSIS AND CONTAINER TYPE PRESERVATIVES

*	Sample Description	Date / Time coll'd	Matrix	No. of Cntrs.	Filt. ☐Y ☒N BTEX (EPA 602)	Filt. ☐Y ☒N TPH GRO (MAINE 4.2.17)	Filt. ☐Y ☒N TPH DRO (MAINE 4.125)	Filt. ☐Y ☐N	Filt. ☐Y ☐N	Filt. ☐Y ☐N	Filt. ☐Y ☐N	Filt. ☐Y ☐N	Filt. ☐Y ☐N	Filt. ☐Y ☐N
	OFF-MST-001	3/10/99 / 0840	W	2	x									
	OFF-MST-001	3/10/99 / 0840	W	2		x								
	OFF-MST-001	3/10/99 / 0840	W	2			x							
	TRIP BLANK	/		2	x									
	TEMP BLANK	/		1										
		/												
		/												
		/												
		/												
		/												
		/												
		/												
		/												
		/												
		/												
		/												

COMMENTS
TURNAROUND TIME: 48 HOURS

Relinquished By: (Signature)	Date / Time	Received By: (Signature)	Relinquished By: (Signature)	Date / Time	Received By: (Signature)
Bartt C Booz	3/10/99 0930	[illegible] 03/10/99	[illegible]	03/10/99 1015	
Relinquished By: (Signature)	Date / Time	Received By: (Signature)	Relinquished By: (Signature)	Date / Time	Received By: (Signature)
					CCCCOIL

ORIGINAL

Katahdin
340 County Road No. 5
P.O. Box 720
Westbrook, ME 04098
Tel: (207) 874-2400
Fax: (207) 775-4029

CHAIN of CUSTODY

PLEASE PRINT IN PEN

Client: EA
Contact: Chip McLeod
Phone #: (914) 565-8100
Fax #: (914) 565-8207
Address:
City: BRUNSWICK
State: ME
Zip Code: 04011
Purchase Order #:
Proj. Name / No.:
Katahdin Quote #:
Bill (if different than above): 3 WASHINGTON CENTER
Address: NEWBURGH NY 12550
Sampler (Print / Sign): BARTT BOOZ Bartt C Booz
Copies To:

LAB USE ONLY
WORK ORDER #: UP1789
KATAHDIN PROJECT MANAGER:
REMARKS:
SHIPPING INFO: ☐ FED EX ☐ UPS ☐ CLIENT
AIRBILL NO:
TEMP°C 6.0 ☐ TEMP BLANK ☐ INTACT ☐ NOT INTACT

ANALYSIS AND CONTAINER TYPE PRESERVATIVES

*	Sample Description	Date / Time coll'd	Matrix	No. of Cntrs.	BTEX (EPA 602) Filt. ☐Y ☒N	TPH-GRO (MAINE 4.2.17) Filt. ☐Y ☒N	TPH-DRO (MAINE 4.125) Filt. ☐Y ☒N	Filt. ☐Y ☐N	Filt. ☐Y ☐N	Filt. ☐Y ☐N	Filt. ☐Y ☐N	Filt. ☐Y ☐N	Filt. ☐Y ☐N	Filt. ☐Y ☐
	OFF-MST-002	4/1/99/0745	W	2	x									
	OFF-MST-002	4/1/99/0745	W	2		x								
	OFF-MST-002	4/1/99/0745	W	2			x							
		/												
		/												
		/												
		/												
		/												
		/												
		/												
		/												
		/												
		/												
		/												
		/												
		/												

COMMENTS - PLEASE FAX RESULTS TO (207) 798-4636
XX 21 DAY TURN AROUND TIME PLEASE XX 21 DAY TAT XX

Relinquished By: (Signature)	Date / Time	Received By: (Signature)	Relinquished By: (Signature)	Date / Time	Received By: (Signature)
Bartt C Booz	4/1/99 1120	[illegible]			
Relinquished By: (Signature)	Date / Time	Received By: (Signature)	Relinquished By: (Signature)	Date / Time	Received By: (Signature)
					0000010

Katahdin
340 County Road No. 5
P.O. Box 720
Westbrook, ME 04098
Tel: (207) 874-2400
Fax: (207) 775-4029

CHAIN of CUSTODY

PLEASE PRINT IN PEN

Client: EA
Contact: CHIP McLEOD
Phone #: (914) 565 8100
Fax #: (914) 565-8203
Address:
City: BRUNSWICK
State: ME
Zip Code: 04011
Purchase Order #:
Proj. Name / No.:
Katahdin Quote #:
Bill (if different than above): 3 WASHINGTON CENTER
Address: NEWBURGH NY 12550
Sampler (Print / Sign): BARTT BOOZ Bartt C Booz
Copies To:

LAB USE ONLY
WORK ORDER #: WP2253
KATAHDIN PROJECT MANAGER
REMARKS:
SHIPPING INFO: ☐ FED EX ☐ UPS ☐ CLIENT
AIRBILL NO:
TEMP°C ☐ TEMP BLANK ☐ INTACT ☐ NOT INTACT

ANALYSIS AND CONTAINER TYPE PRESERVATIVES

*	Sample Description	Date / Time coll'd	Matrix	No. of Cntrs.	BTEX (EPA 602) Filt. ☐Y☐N	TPH-GRO (MAINE 4.2.17) Filt. ☐Y☐N	TPH-DRO (MAINE 4.125) Filt. ☐Y☐N	Filt. ☐Y☐N	Filt. ☐Y☐N	Filt. ☐Y☐N	Filt. ☐Y☐N	Filt. ☐Y☐N	Filt. ☐Y☐N	Filt. ☐Y☐
	OFF-MST-003	5/3/99/0830	W	2	x									
	OFF-MST-003	5/3/99/0830	W	2		x								
	OFF-MST-003	5/3/99/0830	W	2			x							
	(TEMP BLANK INCLUDED)	/												
		/												
		/												
		/												
		/												
		/												
		/												
		/												
		/												
		/												
		/												
		/												
		/												

COMMENTS - PLEASE FAX RESULTS TO BARTT BOOZ AT (207) 798 4636 (FAX) (207) 798 5977 PHONE
* 21 DAY TURN AROUND TIME PLEASE *

Relinquished By: (Signature)	Date / Time	Received By: (Signature)	Relinquished By: (Signature)	Date / Time	Received By: (Signature)
[illegible]		B. Moy 5-3-99 1105	B Moy 5-3-99 1145	05/03/99 1155	
Relinquished By: (Signature)	Date / Time	Received By: (Signature)	Relinquished By: (Signature)	Date / Time	Received By: (Signature)
					0000010

Katahdin
ANALYTICAL SERVICES

340 County Road No. 5
P.O. Box 720
Westbrook, ME 04098
Tel: (207) 874-2400

CHAIN of CUSTODY

* PLEASE PRINT IN PEN

Client: EA (BUILDING 50)	Contact: CHIP McLEOD	Phone #: (914) 565-8100	Fax #: (914) 565-8203
Address: BRUNSWICK NAVAL AIR STATION	City: BRUNSWICK	State: ME	Zip Code: 04011
P.O. #:	Proj. Name/No.: OLD FUEL FARM		
Bill (if different than above): 3 WASHINGTON CENTER	Address: NEWBURGH NY 12550		
Sample (Print/Sign): BARTT BOOZ / Bartt C Booz		Copies To:	

LAB USE ONLY

WORK ORDER #: WP2701

KATAHDIN PROJECT MANAGER: _____

REMARKS: _____

SHIPPING INFO: ☐ FED EX ☐ UPS ☐ CLIENT

AIRBILL NO: _____

TEMP°C _____ ☐ TEMP BLANK ☐ INTACT ☐ NOT INTACT

ANALYSIS AND CONTAINER TYPE PRESERVATIVES

*	Sample Description	Date/Time coll'd	Matrix	Filt. Y/N	No. of Cntrs.	BTEX (EPA 602)	TPH-GRO (MAINE 4.2.12)	TPH-DRO (MAINE 4.125)
	OFF-MST-004	6/1/99 / 1030	W	N	6	x	x	x
	(TEMP BLANK INCLUDED)	/						
		/						
		/						
		/						
		/						
		/						
		/						
		/						
		/						
		/						
		/						
		/						
		/						
		/						
		/						

COMMENTS -PLEASE FAX RESULTS TO BARTT BOOZ AT (207) 798 4636 (FAX) (207) 798 597[illegible] PHON[illegible]

* 21 DAY TURN AROUND TIME PLEASE *

Relinquished By: (Signature)	Date / Time	Received By: (Signature)	Relinquished By: (Signature)	Date / Time	Received By: (Signature)
[illegible]	6/1/99 1420	Andrea Cy	Andrea Cy	6/1/99 1520	Shelley Wilkinson
Relinquished By: (Signature)	Date / Time	Received By: (Signature)	Relinquished By: (Signature)	Date / Time	Received By: (Signature)
					000010

Katahdin
ANALYTICAL SERVICES
340 County Road No. 5
P.O. Box 720
Westbrook, ME 04098
Tel: (207) 874-2400
Fax: (207) 775-4029

CHAIN of CUSTODY

PLEASE PRINT IN PEN

Page ____ of ____

Client: EA Engineering
Contact: Chip McLeod
Phone #: (914) 565-8100
Fax #: (914) 565-8203
Address: 3 Washington Center
City: Newburgh
State: NY
Zip Code: 12550
Purchase Order #:
Proj. Name / No.: Fuel Farm
Katahdin Quote #:
Bill (if different than above):
Address:
Sampler (Print / Sign): Michael Chase Mill Cle
Copies To:

LAB USE ONLY
WORK ORDER #: WP3143
KATAHDIN PROJECT MANAGER:

REMARKS:

SHIPPING INFO: ☐ FED EX ☐ UPS ☐ CLIENT
AIRBILL NO:
TEMP°C ____ ☐ TEMP BLANK ☐ INTACT ☐ NOT INTACT

ANALYSIS AND CONTAINER TYPE PRESERVATIVES

*	Sample Description	Date / Time coll'd	Matrix	No. of Cntrs.	BTEX 602 8020 (Filt. ☐Y ☐N)	DRO MEDEP 4.1.25 (Filt. ☐Y ☐N)	GRO MEDEP 4.2.17 (Filt. ☐Y ☐N)	Filt. ☐Y ☐N	Filt. ☐Y ☐N	Filt. ☐Y ☐N	Filt. ☐Y ☐N	Filt. ☐Y ☐N	Filt. ☐Y ☐N	Filt. ☐Y ☐N
	OFF-MST-005	7-1-99/1000	W	6	X	X	X							
		/												
		/												
		/												
		/												
		/												
		/												
		/												
		/												
		/												
		/												
		/												
		/												
		/												
		/												
		/												

COMMENTS

Relinquished By: (Signature)	Date / Time	Received By: (Signature)	Relinquished By: (Signature)	Date / Time	Received By: (Signature)
Mill Cle	7-1-99 11:30			7-1-99 1600	
Relinquished By: (Signature)	Date / Time	Received By: (Signature)	Relinquished By: (Signature)	Date / Time	Received By: (Signature)
					000000/0

Appendix F

Moisture Separation Tank Analytical Results

Katahdin
ANALYTICAL SERVICES

CLIENT: JOHN CARNRIGHT
EA Engineering
3 Washington Center
Newburgh, NY 12550

Lab Number : WP-1555-1
Report Date: 03/17/99
PO No. : 29600.35.5324

REPORT OF ANALYTICAL RESULTS

SAMPLE DESCRIPTION	MATRIX	SAMPLED BY	SAMPLED DATE	RECEIVED
OFF-MST-001	Aqueous	B.BOOZ	03/10/99	03/10/99

PARAMETER	RESULT	UNITS	DF	*PQL	METHOD	ANALYZED	BY	NOTES
Diesel Range Organics								1
Diesel Range Organics	110.	µg/L	1.0	50	MEDEP4.1.25	03/11/99	JG	
o-Terphenyl	86.	%	1.0		MEDEP4.1.25	03/11/99	JG	
Gasoline Range Organics								
Gasoline Range Organics	100.	µg/L	1.0	10	MEDEP4.2.17	03/11/99	PR	
4-Bromofluorobenzene	112.	%	1.0		MEDEP4.2.17	03/11/99	PR	
Purgeable Aromatics								
Benzene	<0.50	µg/L	1.0	0.50	EPA 602/8020	03/11/99	JY	
Toluene	1.2	µg/L	1.0	1.0	EPA 602/8020	03/11/99	JY	
Ethylbenzene	<1.0	µg/L	1.0	1.0	EPA 602/8020	03/11/99	JY	
Xylenes	<1.5	µg/L	1.0	1.5	EPA 602/8020	03/11/99	JY	
a,a,a-Trifluorotoluene (% Recovery)	93.	%	1.0		EPA 602/8020	03/11/99	JY	

* PQL (Practical Quantitation Level) represents laboratory reporting limits and may not reflect sample-specific reporting limits. Sample-specific limits are indicated by results annotated with '<' values.
(1) Sample Preparation on 03/11/99 by DAS

03/17/99

LJO/jcbajc(dw)/jey
PC11FOW8

0000002

Katahdin
ANALYTICAL SERVICES

CLIENT: JOHN CARNRIGHT
EA Engineering
3 Washington Center
Newburgh, NY 12550

Lab Number : WP-1555-2
Report Date: 03/17/99
PO No. : 29600.35.5324

REPORT OF ANALYTICAL RESULTS

SAMPLE DESCRIPTION	MATRIX	SAMPLED BY	SAMPLED DATE	RECEIVED
TRIP BLANK	Aqueous	B.BOOZ	03/10/99	03/10/99

PARAMETER	RESULT	UNITS	DF	*PQL	METHOD	ANALYZED	BY	NOTES
Purgeable Aromatics								
Benzene	<0.50	µg/L	1.0	0.50	EPA 602/8020	03/11/99	JY	
Toluene	<1.0	µg/L	1.0	1.0	EPA 602/8020	03/11/99	JY	
Ethylbenzene	<1.0	µg/L	1.0	1.0	EPA 602/8020	03/11/99	JY	
Xylenes	<1.5	µg/L	1.0	1.5	EPA 602/8020	03/11/99	JY	
a,a,a-Trifluorotoluene (% Recovery)	101.	%	1.0		EPA 602/8020	03/11/99	JY	

* PQL (Practical Quantitation Level) represents laboratory reporting limits and may not reflect sample-specific reporting limits. Sample-specific limits are indicated by results annotated with '<' values.

03/17/99

LJO/jcbajc(dw)/jey

000003

340 Country Road No. 5
P.O. Box 720, Westbrook, ME 04098
Tel: (207) 874-2400 Fax: 207-775-4029

http://katahdinlab.com

210 West Road No. 5, Portsmouth, NH 03801
Tel: (603) 431-5777 Fax: (603) 436-3356

Katahdin
ANALYTICAL SERVICES

Lab Number : WP-1789-1
Report Date: 04/21/99
PO No. : 04.01.99

CLIENT: CHRIS MCLEOD
EA Engineering
3 Washington Center
Newburgh, NY 12550

WIC#: BNAS

REPORT OF ANALYTICAL RESULTS

SAMPLE DESCRIPTION	MATRIX	SAMPLED BY	SAMPLED	DATE RECEIVED
OFF-MST-002	Aqueous	B.BOOZ	04/01/99	04/01/99

PARAMETER	RESULT	UNITS	DF	*PQL	METHOD	ANALYZED	BY	NOTES
Diesel Range Organics								1
Diesel Range Organics	450.	µg/L	1.0	50	MEDEP4.1.25	04/12/99	JG	
o-Terphenyl	84.	%	1.0		MEDEP4.1.25	04/12/99	JG	
Gasoline Range Organics								2
Gasoline Range Organics	1100.	µg/L	5	10	MEDEP4.2.17	04/06/99	PR	
4-Bromofluorobenzene	96.	%	5		MEDEP4.2.17	04/06/99	PR	
Purgeable Aromatics								2
Benzene	<25.	µg/L	50	0.50	EPA 602/8020	04/08/99	JK	
Toluene	1100.	µg/L	50	1.0	EPA 602/8020	04/08/99	JK	
Ethylbenzene	<50.	µg/L	50	1.0	EPA 602/8020	04/08/99	JK	
Xylenes	130.	µg/L	50	1.5	EPA 602/8020	04/08/99	JK	
a,a,a-Trifluorotoluene (% Recovery)	106.	%	50		EPA 602/8020	04/08/99	JK	

* PQL (Practical Quantitation Level) represents laboratory reporting limits and may not reflect sample-specific reporting limits. Sample-specific limits are indicated by results annotated with '<' values.

(1) Sample Preparation on 04/03/99 by DPD

(2) Sample dilution required for quantitation of one or more target analytes; therefore, standard laboratory Practical Quantitation Level (PQL) could not be achieved.

04/21/99

LJO/jcbjk/kp(dw)
PD03FOW5

000002

340 County Road No. 5
P.O. Box 720, Westbrook, ME 04098
Tel: (207) 87[illegible]-2400 Fax: (207) 775-4029

http://katahdinlab.com

210 West Road No.5, Portsmouth, NH 03801
Tel: (603) 431-5777 Fax: (603) 436-3356

Katahdin
ANALYTICAL SERVICES

CLIENT: CHIP MCCLEOD
EA Engineering
3 Washington Center
Newburgh, NY 12550

Lab Number : WP-2253-1
Report Date: 05/26/99
PO No. : 05.03.99

REPORT OF ANALYTICAL RESULTS

SAMPLE DESCRIPTION	MATRIX	SAMPLED BY	SAMPLED DATE	RECEIVED
OFF-MST-003	Aqueous	BARTT BOOZ	05/03/99	05/03/99

PARAMETER	RESULT	UNITS	DF	*PQL	METHOD	ANALYZED	BY	NOTES
Diesel Range Organics								1
Diesel Range Organics	310.	µg/L	1.0	50	MEDEP4.1.25	05/13/99	JG	
o-Terphenyl	94.	%	1.0		MEDEP4.1.25	05/13/99	JG	
Gasoline Range Organics								
Gasoline Range Organics	27.	µg/L	1.0	10	MEDEP4.2.17	05/17/99	PR	
4-Bromofluorobenzene	107.	%	1.0		MEDEP4.2.17	05/17/99	PR	
Purgeable Aromatics								
Benzene	<0.50	µg/L	1.0	0.50	EPA 602/8020	05/13/99	JK	
Toluene	3.4	µg/L	1.0	1.0	EPA 602/8020	05/13/99	JK	
Ethylbenzene	<1.0	µg/L	1.0	1.0	EPA 602/8020	05/13/99	JK	
Xylenes	<1.5	µg/L	1.0	1.5	EPA 602/8020	05/13/99	JK	
a,a,a-Trifluorotoluene (% Recovery)	103.	%	1.0		EPA 602/8020	05/13/99	JK	

* PQL (Practical Quantitation Level) represents laboratory reporting limits and may not reflect sample-specific reporting limits. Sample-specific limits are indicated by results annotated with '<' values.
(1) Sample Preparation on 05/06/99 by GST

05/26/99

LJO/mrcajc(dw)/jk
PE06FOW8

000002

540 County Road No. 5
P.O. Box 720, Westbrook, ME 04098
Tel: (207) 874-2400 Fax: (207) 775-4029

http://katahdinlab.com

210 West Road No. 5, Portsmouth, NH 03801
Tel: (603) 431-5777 Fax: (603) 436-3356

Katahdin
ANALYTICAL SERVICES

CLIENT: CHIP MCLEOD
EA Engineering
3 Washington Center
Newburgh, NY 12550

Lab Number : WP-2701-1
Report Date: 07/12/99
PO No. : 06.01.99
Project : OLD FUEL FARM

REPORT OF ANALYTICAL RESULTS

SAMPLE DESCRIPTION	MATRIX	SAMPLED BY	SAMPLED DATE	RECEIVED
OFF-MST-004	Aqueous	B. BOOZ	06/01/99	06/01/99

PARAMETER	RESULT	UNITS	DF	*PQL	METHOD	ANALYZED	BY	NOTES
Diesel Range Organics								1
Diesel Range Organics	660.	µg/L	1.0	50	MEDEP4.1.25	06/22/99	JG	
o-Terphenyl	78.	%	1.0		MEDEP4.1.25	06/22/99	JG	
Gasoline Range Organics								
Gasoline Range Organics	88.	µg/L	1.0	10	MEDEP4.2.17	06/09/99	PR	
4-Bromofluorobenzene	113.	%	1.0		MEDEP4.2.17	06/09/99	PR	
Purgeable Aromatics								
Benzene	<0.50	µg/L	1.0	0.50	EPA 602/8020	06/04/99	JK	
Toluene	3.0	µg/L	1.0	1.0	EPA 602/8020	06/04/99	JK	
Ethylbenzene	1.1	µg/L	1.0	1.0	EPA 602/8020	06/04/99	JK	
Xylenes	11.	µg/L	1.0	1.5	EPA 602/8020	06/04/99	JK	
a,a,a-Trifluorotoluene (% Recovery)	106.	%	1.0		EPA 602/8020	06/04/99	JK	

* PQL (Practical Quantitation Level) represents laboratory reporting limits and may not reflect sample-specific reporting limits. Sample-specific limits are indicated by results annotated with '<' values.
(1) Sample Preparation on 06/07/99 by DPD

07/12/99

LJO/jcbajc(dw)/mrc
PF07FOW3

000002

340 County Road No. 5
P.O. Box 720, Westbrook, ME 04098
Tel: (207) 874-2400 Fax: (207) 775-4029

http://katahdinlab.com

210 West Road No. 5, Portsmouth, NH 03801
Tel: (603) 431-5777 Fax: (603) 436-3356

Katahdin
ANALYTICAL SERVICES

CLIENT: CHIP MCLEOD
EA Engineering
3 Washington Center
Newburgh, NY 12550

Lab Number : WP-3143-1
Report Date: 07/20/99
PO No. : 07.01.99
Project : FUEL FARM

REPORT OF ANALYTICAL RESULTS

SAMPLE DESCRIPTION	MATRIX	SAMPLED BY	SAMPLED DATE	RECEIVED
OFF-MST-005	Aqueous	M.CHASE	07/01/99	07/01/99

PARAMETER	RESULT	UNITS	DF	*PQL	METHOD	ANALYZED	BY	NOTES
Diesel Range Organics								
Diesel Range Organics	<50.	µg/L	1.0	50	MEDEP4.1.25	07/09/99	JG	1
o-Terphenyl	72.	%	1.0		MEDEP4.1.25	07/09/99	JG	
Gasoline Range Organics								
Gasoline Range Organics	21.	µg/L	1.0	10	MEDEP4.2.17	07/13/99	PR	
4-Bromofluorobenzene	103.	%	1.0		MEDEP4.2.17	07/13/99	PR	
Purgeable Aromatics+MTBE								
Benzene	<0.50	µg/L	1.0	0.50	EPA 602	07/07/99	JK	
Toluene	<1.0	µg/L	1.0	1.0	EPA 602	07/07/99	JK	
Ethylbenzene	<1.0	µg/L	1.0	1.0	EPA 602	07/07/99	JK	
Xylenes	<1.5	µg/L	1.0	1.5	EPA 602	07/07/99	JK	
Methyltertbutyl ether	<0.50	µg/L	1.0	0.50	EPA 602	07/07/99	JK	
a,a,a-Trifluorotoluene (% Recovery)	97.	%	1.0		EPA 602	07/07/99	JK	

* PQL (Practical Quantitation Level) represents laboratory reporting limits and may not reflect sample-specific reporting limits. Sample-specific limits are indicated by results annotated with '<' values.
(1) Sample Preparation on 07/07/99 by DPD

07/20/99

LJO/mrcajc(dw)/jk
PG07FOW5

3 Mill Creek Road, Unit 5
P.O. Box 720, Westbrook, ME 04098
Tel: (207) 874-2400 Fax: (207) 775-4029

http://katahdinlab.com

210 West Road No. 5, Portsmouth, NH 03801
Tel: (603) 431-5777 Fax: (603) 436-3356

Appendix G

Water Level Gauging Data

EA Engineering, Science, and Technology

FIELD RECORD OF WATER QUALITY PARAMETER ANALYSIS

De-Watering System, Old Navy Fuel Farm, Naval Air Station, Brunswick Maine

Date: Time: Location	3/9/99 0800 Depth to Water (ft)	3/10/99 0845 Depth to Water (ft)	3/11/99 0830 Depth to Water (ft)	3/24/99 1300 Depth to Water (ft)	3/25/99 1500 Depth to Water (ft)	3/29/99 1515 Depth to Water (ft)	3/30/99 1540 Depth to Water (ft)	3/31/99 1600 Depth to Water (ft)	5/14/99 0800
	CJV, JAC	BCB, MC	BCB, MC	BCB	BCB	BCB	BCB	BCB	BCB
WP-1	4.09	4.26	4.18	3.39	3.42	3.52	3.47	3.57	5.07
WP-2	5.02	5.14	5.00	4.47	4.41	4.17	4.47	4.53	6.92
WP-3	3.53	3.60	3.62	3.10	3.35	3.00	2.98	3.08	4.31
WP-4	4.17	4.30	4.25	3.37	3.47	2.58	3.25	3.53	5.10
WP-5	5.17	5.28	5.30	4.56	4.62	4.11	4.45	4.65	5.57
WP-6	4.10	4.26	4.25	3.33	3.53	2.92	3.23	3.55	4.76
WP-7	4.53	4.67	4.68	3.40	3.67	3.07	3.46	3.91	5.14
WP-8	4.29	4.49	4.50	3.57	3.96	3.07	3.48	4.02	5.61
WP-9	6.10	6.11	6.10	4.56	4.55	3.81	3.91	4.01	7.07
WP-10	4.96	5.24	5.35	3.57	3.62	2.55	3.26	3.61	5.52
WP-11	5.06	5.21	5.25	4.05	4.21	3.30	3.91	4.32	5.52
WP-12	6.49	6.56	6.58	5.00	5.02	4.71	4.48	4.81	7.24
WP-13	OBSTRUCTED	4.42	4.40	2.83	3.22	2.45	2.60	3.17	6.15
WP-14	5.73	6.21	6.28	4.36	4.50	3.60	4.10	4.55	6.10
WP-15	5.78	6.17	6.20	4.30	4.41	3.55	4.15	4.61	6.00
WP-16R	7.05	6.91	6.90	5.21	5.16	4.38	4.31	4.37	7.69
WP-17R	WP-17 DRY	6.77	6.83	5.25	5.30	4.60	4.77	4.91	7.98
WP-18R	5.48	5.84	5.96	4.21	4.39	3.47	4.05	4.43	6.00
WP-20	NG	—	—	—	—	—	—	—	
WP-21	NG	6.08	6.20	4.65	4.79	3.96	4.40	4.80	6.54
WP-22	NG	5.60	5.63	4.65	5.01	4.15	4.39	4.94	6.70
MW-44	NG	2.67	2.52	2.05	2.10	1.91	2.04	2.10	3.46
MW-54	NG	5.80	5.85	4.25	4.43	3.42	NG	4.42	6.17
MW-61R	NG	4.52	4.45	3.56	3.61	3.42	NG	3.72	5.20
MW-211	NG	6.45	6.47	5.07	5.04	3.75	4.44	4.65	7.18

START SYSTEM @ 0930

HEAVY RAINS

EA 5120 0794-7

PLEASE GIVE TO CHIP BARTT

EA Engineering, Science, and Technology

FIELD RECORD OF WATER QUALITY PARAMETER ANALYSIS

De-Watering System, Old Navy Fuel Farm, Naval Air Station, Brunswick Maine

	Date: Time: Location	4/7/99 1400 Depth to Water (ft)	4/12/99 1100 Depth to Water (ft)	4/15/99 1035 Depth to Water (ft)	4/21/99 1130 Depth to Water (ft)	4/26/99 1530 Depth to Water (ft)	4/30/99 0800 Depth to Water (ft)	DEPTH TO BOTTOM ~~Depth to Water (ft)~~	5/14/99 0800 Depth to Water (ft)	
2"	WP-1	4.01	4.43	4.55	4.77	4.84	5.08	8.27	4.30	5.07
2"	WP-2	4.82	5.15	5.27	5.52	5.61	5.74	8.20	5.18	6.92
2"	WP-3	3.55	3.76	4.16	4.06	4.11	4.32	7.60	4.10	4.31
2"	WP-4	4.15	4.57	5.08	5.27	5.25	5.71	7.40	5.52	5.70
2"	WP-5	5.11	5.31	5.38	5.49	5.48	5.61	7.61	5.40	5.57
2"	WP-6	4.00	4.22	4.53	4.53	4.50	4.76	7.68	4.42	4.76
2"	WP-7	4.31	4.60	5.02	4.95	4.90	5.15	7.70	4.79	5.14
2"	WP-8	4.47	4.77	5.28	5.51	5.50	5.60	7.60	5.41	5.61
2"	WP-9	4.81	5.26	5.49	5.97	6.20	6.55	7.22	6.85	7.07
2"	WP-10	4.41	4.90	5.09	5.36	5.34	5.63	7.87	5.35	5.52
2"	WP-11	4.89	5.14	5.44	5.41	5.34	5.56	7.45	5.34	5.52
2"	WP-12	5.78	6.12	6.38	6.81	6.80	7.05	7.62	7.11	7.24
2"	WP-13	4.07	4.44	NG	5.10	5.45	6.00	7.60	5.98	6.15
2"	WP-14	5.67	6.01	5.91	6.01	6.00	6.20	7.90	5.96	6.10
2"	WP-15	5.55	5.91	5.86	5.99	5.94	6.15	8.05	5.87	6.00
1"	WP-16R	5.30	5.80	6.34	6.71	6.87	7.20	13.65	7.38	7.69
1"	WP-17R	5.85	6.31	7.01	7.28	7.40	7.61	19.15	7.80	7.98
1"	WP-18R	5.46	5.64	5.74	5.81	5.85	6.04	8.37	5.80	6.00
—	WP-20	—	—	—	—	—	—	—		
1"	WP-21	5.65	5.97	6.15	6.25	6.16	6.50	13.00	6.23	6.54
1"	WP-22	5.36	5.66	6.72	6.45	6.47	6.62	13.60	6.46	6.70
—	MW-44	2.48	2.69	2.83	2.99	3.04	3.18	—	2.84	3.46
—	MW-54	5.39	5.74	6.80	5.99	6.02	6.22	—	5.95	6.17
—	MW-61R	4.19	4.57	4.70	4.95	5.01	5.26	—	5.00	5.20
—	MW-211	5.76	6.12	6.57	6.83	6.80	7.02	—	6.82	7.18
	MST TANK	3.14	2.5		3.0	3.0				

EA Engineering, Science, and Technology

FIELD RECORD OF WATER QUALITY PARAMETER ANALYSIS

De-Watering System, Old Navy Fuel Farm, Naval Air Station, Brunswick Maine

Date: Time: Location	5/27/99 0900 Depth to Water (ft)	5/28/99 1300 Depth to Water (ft)	6/14/99 0900 Depth to Water (ft)	6/28/99 Depth to Water (ft)	7/12/99 Depth to Water (ft)	Depth to Water (ft)	Depth to Water (ft)	Depth to Water (ft)
WP-1	4.17	4.65	5.62	5.90	6.12			
WP-2	5.55	5.62	6.07	6.38	6.45			
WP-3	3.91	4.04	4.81	5.22	5.55			
WP-4	4.50	4.74	6.09	6.80	7.38			
WP-5	5.18	5.51	5.84	6.03	6.18			
WP-6	4.27	4.35	4.93	5.29	5.50			
WP-7	4.45	4.60	5.30	5.71	5.97			
WP-8	4.89	5.07	5.75	6.27	6.71			
WP-9	6.78	6.76	DRY	DRY	DRY			
WP-10	4.69	4.75	6.01	6.45	6.81			
WP-11	5.03	5.05	5.69	6.07	6.32			
WP-12	6.79	6.70	7.23	DRY	DRY			
WP-13	4.71	4.80	—	—	7.40			
WP-14	5.58	5.61	6.52	6.98	7.29			
WP-15	5.47	5.41	6.27	6.70	6.92			
WP-16R	7.75	7.66	—	7.19	8.80			
WP-17R	7.79	7.65	8.14	8.50	8.86			
WP-18R	5.57	5.71	6.76	7.17	7.45			
WP-20	—	—	—	—	—			
WP-21	5.81	5.90	6.83	7.17	7.51			
WP-22	6.06	6.14	6.90	7.33	7.85			
MW-44	2.95	3.07	3.61	4.01	4.20			
MW-54	5.61	5.75	7.74	7.18	7.50			
MW-61R	4.52	4.62	5.75	6.10	6.34			
MW-211	6.67	6.57	7.19	7.78	8.14			

WELL UNDER ASPHALT
DEPTH = 6.66'
WATER = 4.97

EA 5120 0794-7

2.5" RAIN FROM

Appendix H

Vapor Sample Analytical Data

@AIR TOXICS LTD.

AN ENVIRONMENTAL ANALYTICAL LABORATORY

WORK ORDER #: 9907191

Work Order Summary

CLIENT: Mr. Kurt Varner
EA Engineering
3 Washington Center
Newburgh, NY 12550

BILL TO: Same

PHONE: 914-565-8100
FAX: 914-565-8203
DATE RECEIVED: 7/14/99
DATE COMPLETED: 7/28/99

P.O. # 215101032
PROJECT # 2960035.5324 NASB Old Fuel Farm

FRACTION #	NAME	TEST
01A	NASB-OFF-005 5a	Mod. NIOSH 1550
02A	NASB-OFF-005 5b	Mod. NIOSH 1550
03A	NASB-OFF-015 15a	Mod. NIOSH 1550
04A	NASB-OFF-015 15b	Mod. NIOSH 1550
05A	LCS	Mod. NIOSH 1550
06A	Lab Blank	Mod. NIOSH 1550

CERTIFIED BY: _____ Laboratory Director

DATE: 7/28/99

Certification numbers: CA ELAP - 1149, NY ELAP - 11291, UT ELAP - E-217

180 BLUE RAVINE ROAD, SUITE B FOLSOM, CA 95630
(916) 985-1000 • (800) 985-5955 • FAX (916) 985-1020

AIR TOXICS LTD.

SAMPLE NAME: NASB-OFF-005 5a

ID#: 9907191-01A

Modified NIOSH 1550
GC/FID

File Name:	x072124	**Date of Collection:**	7/13/99
Dil. Factor:	1.00	**Date of Analysis:**	7/21/99

Compound	Det. Limit (uG)	Amount (uG)
Benzene	1.0	Not Detected
Toluene	1.0	290
Ethyl Benzene	1.0	4.8
m,p-Xylene	1.0	4.0
o-Xylene	1.0	8.1

Average Molecular Weight: 94

AIR TOXICS LTD.

SAMPLE NAME: NASB-OFF-005 5b

ID#: 9907191-02A

Modified NIOSH 1550
GC/FID

Fil Name:	**x072125**	**Date of Collection:**	**7/13/99**
Dil. Factor:	**1.00**	**Date of Analysis:**	**7/22/99**

Compound	Det. Limit (uG)	Amount (uG)
Benzene	1.0	Not Detected
Toluene	1.0	Not Detected
Ethyl Benzene	1.0	Not Detected
m,p-Xylene	1.0	Not Detected
o-Xylene	1.0	Not Detected

Average Molecular Weight: NA

AIR TOXICS LTD.

SAMPLE NAME: NASB-OFF-015 15a

ID#: 9907191-03A

Modified NIOSH 1550
GC/FID

File Name:	**x072126**	**Date of Collection:**	**7/13/99**
Dil. Factor:	**1.00**	**Date of Analysis:**	**7/22/99**

Compound	Det. Limit (uG)	Amount (uG)
Benzene	1.0	Not Detected
Toluene	1.0	880
Ethyl Benzene	1.0	18
m,p-Xylene	1.0	17
o-Xylene	1.0	30

Average Molecular Weight: 96

AIR TOXICS LTD.

SAMPLE NAME: NASB-OFF-015 15b

ID#: 9907191-04A

Modified NIOSH 1550
GC/FID

File Name:	x072127	**Date of Collection:**	7/13/99
Dil. Factor:	1.00	**Date of Analysis:**	7/22/99

Compound	Det. Limit (uG)	Amount (uG)
Benzene	1.0	Not Detected
Toluene	1.0	Not Detected
Ethyl Benzene	1.0	Not Detected
m,p-Xylene	1.0	Not Detected
o-Xylene	1.0	Not Detected

Average Molecular Weight: NA

AIR TOXICS LTD.

SAMPLE NAME: LCS

ID#: 9907191-05A

Modified NIOSH 1550
GC/FID

Fil Name:	x072119	**Date of Collection:**	NA
Dil. Factor:	1.00	**Date of Analysis:**	7/21/99

Compound	Det. Limit (uG)	% Recovery
Benzene	1.0	100
Toluene	1.0	98
Ethyl Benzene	1.0	98
m,p-Xylene	1.0	95
o-Xylene	1.0	96

AIR TOXICS LTD.

SAMPLE NAME: Lab Blank

ID#: 9907191-06A

Modified NIOSH 1550
GC/FID

File Name:	**x072118**	**Date of Collection:**	**NA**
Dil. Factor:	**1.00**	**Date of Analysis:**	**7/21/99**

Compound	Det. Limit (uG)	Amount (uG)
Benzene	1.0	Not Detected
Toluene	1.0	Not Detected
Ethyl Benzene	1.0	Not Detected
m,p-Xylene	1.0	Not Detected
o-Xylene	1.0	Not Detected

Average Molecular Weight: NA

AIR TOXICS LTD.
AN ENVIRONMENTAL ANALYTICAL LABORATORY

180 BLUE RAVINE ROAD, SUITE B
FOLSOM, CA 95630-4719
(916) 985-1000 FAX: (916) 985-1020

CHAIN-OF-CUSTODY RECORD

№ 020667

Contact Person: BARTT BOOZ
Company: EA ENGINEERING, SCIENCE AND TECHNOLOGY
Address: PO BOX 1305 #287 City: BRUNSWICK State: ME Zip: 04011
Phone: 207 798 5977 FAX: 207 798 4636
Collected By: Signature: Bartt C Booz

Project info:
P.O. #:
Project #: 2960035.5324
Project Name: NASB OLD FUEL FARM

Turn Around Time:
☒ Normal
☐ Rush _____ Specify

Lab I.D.	Field Sample I.D.	Date & Time	Analyses Requested	Canister Pressure/Vacuum Initial	Final	Receipt
01 02	NASB-OFF-005	7/13/99 0900	BTEX, TPH, MOLECULAR WEIGHT (NIOSH 1550 TUBES)			
03 04	02 NASB-OFF-015	7/13/99 1017	BTEX, TPH, MOLECULAR WEIGHT (NIOSH 1550 TUBES)			
			NOTE: NASB-OFF-005 → PULLED 5L THROUGH 5a + 5b @ 0.15 ft³/HR (0.07079 L/MIN) (70 MIN, 38 SEC)			
			NASB-OFF-015 → PULLED 15L THROUGH 15a + 15b @ 0.15 ft³/HR (0.07079 L/MIN) (211 MIN, 53 SEC)			

Relinquished By: (Signature) Date/Time: Bartt C Booz 7/13/99 1600 Print Name: BARTT BOOZ
Relinquished By: (Signature) Date/Time: Received By: (Signature) Date/Time:
Relinquished By: (Signature) Date/Time: Received By: (Signature) Date/Time: Susan Meeke AR 7/14/99 940

Notes:
NASB-OFF-005 (5a + 5b)
NASB-OFF-015 (15a + 15b)
PULLED FROM 8" SCH80 PIPE FLOWING 700 scfm THROUGH 1/4" SAMPLE PORT FLOWING @ 0.15 ft³/HOUR. 8" PIPE UNDER 3 in Hg VACUUM
5a(15a) 5b(15b)

Lab Use Only	Shipper Name	Air Bill #	Opened By:	Date/Time	Temp. (°C)	Condition	Custody Seals Intact?	Work Order #
	Fed-ex	8074554744636	TS	7/14/99 940	Ambient	Good	Yes No None N/A	9907191

293 rev. 06

Appendix I

Field Record of
Air Sparging System Operations Forms

SYSTEM INTAKE DATA

date	PID (ppm)	Daily TVH Intake Rate (lbs/day)	number of day between recording	TVH removal between recording	Cumulative TVH Intake (lbs)
1-Mar-99	0	0.00	1	0	0
13-Apr-99	**15**	3.78	1	3.78252	3.78252
14-Apr-99	**9**	2.27	1	2.269512	6.052032
15-Apr-99	**16**	4.03	1	4.034688	10.08672
16-Apr-99	**16.4**	4.14	1	4.1355552	14.2222752
19-Apr-99	**22**	5.55	3	16.643088	30.8653632
20-Apr-99	**21**	5.30	1	5.295528	36.1608912
21-Apr-99	**22.5**	5.67	1	5.67378	41.8346712
22-Apr-99	**22**	5.55	1	5.547696	47.3823672
23-Apr-99	**22**	5.55	1	5.547696	52.9300632
26-Apr-99	**25**	6.30	3	18.9126	71.8426632
27-Apr-99	**26**	6.56	1	6.556368	78.3990312
29-Apr-99	**30**	7.57	2	15.13008	93.5291112
3-May-99	**32**	8.07	4	32.277504	125.8066152
7-May-99	**32**	8.07	4	32.277504	158.0841192
11-May-99	**35**	8.83	3	26.47764	184.5617592
21-May-99	**28**	7.06	10	70.60704	255.1687992
27-May-99	**35**	8.83	6	52.95528	308.1240792
28-May-99	**55**	13.87	1	13.86924	321.9933192
2-Jun-99	**30**	7.57	5	37.8252	359.8185192
9-Jun-99	**60**	15.13	7	105.91056	465.7290792
11-Jun-99	**86**	21.69	2	43.372896	509.1019752
14-Jun-99	**63**	15.89	3	47.659752	556.7617272
15-Jun-99	**59**	14.88	1	14.877912	571.6396392
30-Jun-99	**43.5**	10.97	15	164.53962	736.1792592
12-Jul-99	**28**	7.06	12	84.728448	820.9077072
15-Jul-99	**50**	12.61	3	37.8252	858.7329072

SYSTEM EMISSIONS DATA

Date	Stack PID (ppm)	TVH Emissions Rate (lbs/day)	Cumulative TVH Emissions (lbs)	NOTES:
3/1/1999	0	0	0	
9-Mar-99	0	0.00	0.00	Western SVE leg activated 1500; eastern SVE leg activated 1600
10-Mar-99	0	0.00	0.00	
11-Mar-99	0	0.00	0.00	
12-Mar-99	0	0.00	0.00	
13-Mar-99	0	0.00	0.00	
14-Mar-99	0	0.00	0.00	
15-Mar-99	0	0.00	0.00	
16-Mar-99	0	0.00	0.00	
17-Mar-99	0	0.00	0.00	
18-Mar-99	0	0.00	0.00	
19-Mar-99	0	0.00	0.00	
20-Mar-99	0	0.00	0.00	
21-Mar-99	0	0.00	0.00	
22-Mar-99	0	0.00	0.00	
23-Mar-99	0	0.00	0.00	
24-Mar-99	0	0.00	0.00	
25-Mar-99	0	0.00	0.00	
26-Mar-99	0	0.00	0.00	
27-Mar-99	0	0.00	0.00	
28-Mar-99	0	0.00	0.00	
29-Mar-99	0	0.00	0.00	
30-Mar-99	0	0.00	0.00	
31-Mar-99	0	0.00	0.00	
1-Apr-99	0	0.00	0.00	
2-Apr-99	0	0.00	0.00	
3-Apr-99	0	0.00	0.00	
4-Apr-99	0	0.00	0.00	
5-Apr-99	0	0.00	0.00	
6-Apr-99	0	0.00	0.00	Start SVE Blowers V1B along with V1A
7-Apr-99	0	0.00	0.00	
8-Apr-99	0	0.00	0.00	
9-Apr-99	0	0.00	0.00	
10-Apr-99	0	0.00	0.00	
11-Apr-99	0	0.00	0.00	
12-Apr-99	0	0.00	0.00	Start AAS Blower C1A 4/12/99 at 1500
13-Apr-99	5	2.70	2.70	
14-Apr-99	3	1.62	4.32	
15-Apr-99	6	3.24	7.57	
16-Apr-99	6.5	3.51	11.08	
17-Apr-99	7	3.78	14.86	
18-Apr-99	8	4.32	19.18	
19-Apr-99	9	4.86	24.05	
20-Apr-99	8	4.32	28.37	
21-Apr-99	9.3	5.03	33.39	
22-Apr-99	9.5	5.13	38.53	
23-Apr-99	9.5	5.13	43.66	Increase sparge from 1psi/190 cfm to 3 psi/250 cfm; 0.21" rain
24-Apr-99	9.5	5.13	48.79	
25-Apr-99	9.5	5.13	53.93	
26-Apr-99	10	5.40	59.33	0.14" rainfall
27-Apr-99	11	5.94	65.28	0.03" rainfall
28-Apr-99	12.5	6.75	72.03	
29-Apr-99	14	7.57	79.60	
30-Apr-99	14	7.57	87.16	

SYSTEM EMISSIONS DATA

Date	Stack PID (ppm)	TVH Emissions Rate (lbs/day)	Cumulative TVH Emissions (lbs)	NOTES:
1-May-99	14	**7.57**	94.73	
2-May-99	14	**7.57**	102.29	
3-May-99	**14**	**7.57**	109.86	
4-May-99	14	**7.57**	117.42	0.84" rainfall
5-May-99	14	**7.57**	124.99	0.03" rainfall
6-May-99	13	**7.02**	132.01	0.01" rainfall
7-May-99	**13**	**7.02**	139.03	
8-May-99	14	**7.57**	146.60	0.35" rainfall
9-May-99	15	**8.11**	154.71	0.04" rainfall
10-May-99	16	**8.65**	163.35	
11-May-99	**17**	**9.19**	172.54	
12-May-99	17	**9.19**	181.72	
13-May-99	16	**8.65**	190.37	
14-May-99	16	**8.65**	199.01	
15-May-99	15	**8.11**	207.12	
16-May-99	15	**8.11**	215.23	
17-May-99	14	**7.57**	222.79	
18-May-99	14	**7.57**	230.36	
19-May-99	13	**7.02**	237.38	2.5" rainfall from 5/19 to 5/24
20-May-99	13	**7.02**	244.40	
21-May-99	**12.5**	**6.75**	251.16	
22-May-99	13	**7.02**	258.18	
23-May-99	13	**7.02**	265.21	
24-May-99	13	**7.02**	272.23	
25-May-99	14	**7.57**	279.80	
26-May-99	14	**7.57**	287.36	0.07" rainfall
27-May-99	**14**	**7.57**	294.93	0.06" rainfall
28-May-99	**22**	**11.89**	306.82	Bring new SVE expansion on line; 5/28/99 at 1150
30-May-99	20	**10.81**	317.62	
31-May-99	18	**9.73**	327.35	
1-Jun-99	16	**8.65**	336.00	
2-Jun-99	**14**	**7.57**	343.56	
3-Jun-99	**15**	**8.11**	351.67	Bring new AAS wells on line with C1A on 6/3/99 at 0800
4-Jun-99	15	**8.11**	359.77	
5-Jun-99	15	**8.11**	367.88	
6-Jun-99	16	**8.65**	376.52	
7-Jun-99	16	**8.65**	385.17	PID readings in error due to high humidity
8-Jun-99	16	**8.65**	393.81	Start C1B and C2; C1A off; increase sparge rate from 1 blower at 3psi/250 cfm to 2 blowers at 7psi/300 cfm each (600 cfm total)
9-Jun-99	**34**	**18.37**	412.19	
10-Jun-99	41	**22.15**	434.34	
11-Jun-99	**48**	**25.94**	460.28	
12-Jun-99	44	**23.78**	484.05	
13-Jun-99	40	**21.61**	505.67	
14-Jun-99	**36**	**19.45**	525.12	
15-Jun-99	**35**	**18.91**	544.03	
16-Jun-99	17	**9.19**	553.22	Shut down system to plumb 5,000 lb carbon vessel. System off from 1400 6/16/99 to 1000 6/17/99.
17-Jun-99	2	**1.08**	554.30	Restart system at 1000 on 6/17/99.
18-Jun-99	**4**	**2.16**	556.46	
19-Jun-99	4	**2.16**	558.62	
20-Jun-99	4	**2.16**	560.79	
21-Jun-99	4	**2.16**	562.95	

SYSTEM EMISSIONS DATA

Date	Stack PID (ppm)	TVH Emissions Rate (lbs/day)	Cumulative TVH Emissions (lbs)	NOTES:
22-Jun-99	4	**2.16**	565.11	
23-Jun-99	4	**2.16**	567.27	
24-Jun-99	4	**2.16**	569.43	
25-Jun-99	4	**2.16**	571.59	
26-Jun-99	4	**2.16**	573.75	
27-Jun-99	4	**2.16**	575.92	
28-Jun-99	4	**2.16**	578.08	
29-Jun-99	4	**2.16**	580.24	
30-Jun-99	4	**2.16**	582.40	
1-Jul-99	4	**2.16**	584.56	
2-Jul-99	4	**2.16**	586.72	
3-Jul-99	4	**2.16**	588.88	
4-Jul-99	5	**2.70**	591.59	
5-Jul-99	6	**3.24**	594.83	
6-Jul-99	6	**3.24**	598.07	
7-Jul-99	7	**3.78**	601.85	
8-Jul-99	8	**4.32**	606.18	
9-Jul-99	9	**4.86**	611.04	
10-Jul-99	9	**4.86**	615.90	
11-Jul-99	9	**4.86**	620.77	
12-Jul-99	**10**	**5.40**	626.17	Install sample ports on the influent and effluent of the 5,000 lb vapor phase carbon vessel.
13-Jul-99	12	**6.48**	632.65	Collect air samples to be run for BTEX, TPH, and Molecular Weight
14-Jul-99	13	**7.02**	639.68	
15-Jul-99	**15**	**8.11**	647.78	
16-Jul-99	**21**	**11.35**		Shut down AAS at 0830; Shut down SVE at 1445

EA Engineering, Science, and Technology

	Date	Time	V1A Vacuum (in. Hg)	V1B Vacuum (in. Hg)	V2 Vacuum (in. Hg)	Total Vacuum at MST (in. Hg)	PID	FID	CH_4	O_2	CO_2	
WESTERN LEG ACTIVATED →	3/9/99	1500	N/A	2	NA	8	0.49	10.8	0	20.2	0	
	3/9	1510	NA	1.5	NA	8	0.38	7.28	0	20.2	0	
	3/9	1520	NA	1.55	NA	4	0.38	8.38	0	20.2	0	
	3/9	1540	NA	0.5	NA	4	0.22	10.31	0	20.2	0	
	3/9	1550	NA	0.5	NA	4	0.12	15.23				
ASTERN LEG → ICTIVATED	3/9	1600	NA	0.5	NA	4	0.24	16.91				
	3/9	1630						15.00				
	3/10	0900	NA	NA	NA	4	0	4	NA	NA	NA	
	3/11	0915	NA	NA	NA	3.5	0	4	NA	NA	NA	
ESTART → SYSTEM 3/24/99	3/25	1300	4.5	NA	NA	3.5	0	0	NA	NA	NA	
	3/29	1515	3.5	NA	NA	0.5	0	0	NA	NA	NA	
'E[illegible] → EG, BLOW ATER BACK O TANK	3/30	1540	4.0	NA	NA	4.0	0	0	NA	NA	NA	
	3/31	1600	1.5	NA	NA	1.5	0	3	NA	NA	NA	
	4/7	1400	3.0	~~[illegible]~~	3.0	3.0	0	2	NA	NA	NA	
START VIB AGONG	4/8	1300	3.0	3.0	3.0	3.0	0	2	NA	NA	NA	
W/ VIA 4/6/99	4/12	1700	3.5	3.5	NA ~~3.5~~	3.5	0	15	NA	NA	NA	
	4/13	0740	3.5	3.5	NA	3.5	15	200	NA	NA	NA	BEFORE DIL
TART AIR SPARGE BLOWER	4/13	0740					5	50				STACK
	4/14	0830	3.5	3.5	NA	3.5	9	90				BEFORE DIL.
CIA	4/14	0830	3.5	3.5	NA	3.5	3	30				STACK
500	4/15	0830	4.0	4.0	NA	3.8	16	135				BEFORE DIL
1/12	4/15	0830	4.0	4.0	NA	3.8	6	50				STACK
	4/16	0800	4.0	4.0	NA	3.8	16.4	159				BEFORE DIL
	4/16	0800	4.0	4.0	NA	3.8	6.5	61				STACK
	4/19	0900	3.8	3.8	NA	3.0	22	175				BEFORE DIL
	4/19	0900	3.8	3.8	NA	3.0	9	70				STACK
	4/20	0730	3.8	3.8	NA	3.0	21	160				BEFORE DI
	4/20	0730	3.8	3.8	NA	3.0	8	62				STACK
	4/21	1100	3.8	3.8	NA	3.0	22.5	208				BEFORE DIL
	4/21	1100	3.8	3.8	NA	3.0	9.3	82				STACK
	[illegible]	0800	3.8	3.8	N/A	3.0	22	180				BEFORE DIL

	VIA	VIB	MST			
4/23/99	3.5	3.5	3.0	22	117	BEFORE DIL STACK
4/23/99	3.5	3.5	3.0	9.5	72	
4/23/99	TURN SPARGE UP FROM 1psi/190cfm TO 3psi/(250 cfm					
4/26/99	3.5	3.5	3.0	25	208	BEFORE DIL STACK
4/26/99	3.5	3.5	3.0	10	85	
4/27/99	3.5	3.5	3.0	26	230	BEFORE DIL STACK
4/27/99	3.5	3.5	3.0	11	100	
4/29/99	"	"	"	30	340	BEFORE DIL STACK
4/29/99	"	"	"	14	140	
5/3/99	"	"	"	32	320	BEFORE DIL STACK
5/3/99	"	"	"	14	138	
5/7/99	"	"	"	32	302	BEF. DIL STACK
5/7/99	"	"	"	13	130	
5/11/99	"	"	"	35	366	BEFORE DIL STACK
5/11/99	"	"	"	17	160	
5/21/99	3.5	3.5	3.0	28	290	BEF. DIL STACK
5/21/99	"	"	"	12.5	129	
5/27/99	"	"	"	35	350	BEF. DIL STACK
5/27/99	"	"	"	14	133	
5/28/99	7.0	7.0	5.0	55	NA	BEFORE DIL STACK
5/28/99	7.0	7.0	5.0	22	210	
5/29/99	7.0	7.0				
6/2/99	7.0	7.0	5.0	30	340	BEFORE DIL STACK
6/2/99	7.0	7.0	5.0	14	150	STACK
6/3/99 (1630)	7.0	7.0	5.0	15	140	
6/5				HUMIDITY NA	404	BEFORE DIL STACK
6/7/99	7.0	7.0	5.0	NA	202	
6/7/99	7.0	7.0	5.0			
6/8/99	"	"	"	60	950	BEFORE DIL STACK
6/9/99	"	"	"	34	480	BEFORE DIL

/28/99 150 RINK NEW EXPANSION SUC ON LINE

6/3 0800 START NEW SPARGE WELLS

START CIB AND