N96095.AR.000687
NSWC WHITE OAK
5090.3a

WORK PLAN

FOR

CONSTRUCTION OVERSIGHT AND CONFIRMATION SOIL SAMPLING SITE 2 – FIRE TRAINING AREA

Naval Weapons Industrial Reserve Plant (NWIRP)

Calverton, New York

Naval Facilities Engineering Command Mid-Atlantic

CONTRACT NUMBER N62472-03-D-0057
Contract Task Order 162

October 2008

WORK PLAN

FOR

CONSTRUCTION OVERSIGHT
AND
CONFIRMATION SOIL SAMPLING
SITE 2 – FIRE TRAINING AREA

NAVAL WEAPONS INDUSTRIAL RESERVE PLANT
CALVERTON, NEW YORK

Submitted to:
Naval Facilities Engineering Command Mid-Atlantic
9742 Maryland Avenue
Norfolk, Virginia 23511-3095

Submitted by:
Tetra Tech NUS, Inc.
234 Mall Boulevard Suite 260
King of Prussia, Pennsylvania 19406

In Support Of:

CONTRACT NUMBER N62472-03-D-0057
Contract Task Order 162

October 2008

PREPARED UNDER THE DIRECTION OF:

DAVID BRAYACK
PROJECT ENGINEER
TETRA TECH NUS, INC.
NORFOLK, VIRGINIA

APPROVED FOR SUBMISSION BY:

JOHN TREPANOWSKI, P.E.
PROGRAM MANAGER
TETRA TECH NUS, INC.
KING OF PRUSSIA,
PENNSYLVANIA

TABLE OF CONTENTS

SECTION **PAGE**

ACRONYMS A-1

1.0 INTRODUCTION 1-1
1.1 BACKGROUND 1-1
1.2 SCOPE AND OBJECTIVE 1-2
1.3 PLAN ORGANIZATION 1-2

2.0 SITE BACKGROUND 2-1
2.1 SITE DESCRIPTION 2-1
2.1.1 Site Description and Physical Setting 2-1
2.1.2 Site History 2-1
2.2 SITE CHARACTERISTIC 2-2
2.2.1 Geology 2-2
2.2.2 Hydrogeology 2-2
2.3 ENVIRONMENTAL INVESTIGATION HISTORY 2-3
2.4 DESCRIPTION OF CURRENT CONDITIONS 2-5
2.5 ANTICIPATED NON-TIME CRITICAL REMOVAL ACTION 2-8

3.0 PLANNED ACTIVITIES 3-1
3.1 FIELD OVERSIGHT 3-1
3.2 CONFIRMATION SAMPLING 3-1
3.3 SURVEYING 3-2

4.0 DATA EVALUATION 4-1
4.1 DATA EVALUATION 4-1

5.0 REPORTING REQUIREMENTS 5-1
5.1 REPORT 5-1

REFERENCES R-1

TABLES

NUMBER

3-1 Summary of Sampling and Analytical Program
3-2 Sample Identification
3-3 Sample Container, Preservation, and Holding Time Requirements
4-1 Screening Data

FIGURES

NUMBER

1-1 General Location Map
1-2 Site Location Map
2-1 Site 2 Layout Map
2-2 Existing Conditions and Cross Section
2-3 Cross Section A-A'
3-1 Soil Confirmation Sample Locations

APPENDICIES

A TtNUS SOP SA-1.3: Soil Sampling
B TtNUS SOP SA-6.3: Field Documentation

ACRONYMS

AS/SVE	Air Sparging/Soil Vapor Extraction
AST	Aboveground Storage Tank
bgs	below ground surface
CLEAN	Comprehensive Long-term Environmental Action Navy
CN	Cyanide
CTO	Contract Task Order
DRO	Diesel Range Organics
EE/CA	Engineering Evaluation/Cost Analysis
EMAC	Environmental Multiple Award Contractor
ft/day	feet per day
ft/min	feet per minute
GRO	Gasoline Range Organics
gps	global positioning system
IAS	Initial Assessment Study
MCL	Maximum Contaminant Level
mg/kg	milligram per kilogram
MPC	Marine Pollution Control
NTCRA	Non-Time Critical Removal Action
NWIRP	Naval Weapons Industrial Reserve Plant
NYS	New York State
PAH	Polycyclic Aromatic Hydrocarbon
PCB	Polycyclic Biphenyl
PID	Photo Ionization Detector
ppm	parts per million
QA/QC	Quality Assurance/Quality Control
RAWP	Remedial Action Work Plan
RCRA	Resource Conservation and Recovery Act
RFI	RCRA Facilities Investigation
SOP	Standard Operating Procedure
SVOC	Semi Volatile Organic Compound
TAGM	Technical and Administrative Guidance Memorandum
TAL	Target Analyte List
TCL	Target Compound List
TICs	Tentatively Identified Compounds
TPH	Total Petroleum Hydrocarbons
µg/kg	microgram per kilogram
VOC	Volatile Organic Compound

1.0 INTRODUCTION

This Work Plan has been prepared by Tetra Tech NUS, Inc. (Tetra Tech) for Site 2 – Fire Training Area at the Naval Weapons Industrial Reserve Plant (NWIRP) Calverton, NY under the Comprehensive Long-term Environmental Action Navy (CLEAN) IV Contract No. N62472-03-D-0057 Contract Task Order (CTO) 0162. The Work Plan outlines construction oversight and environmental confirmation sampling activities to be conducted in support of a Non-Time Critical Removal Action (NTCRA) at Site 2 (Figure 1-1 and 1-2). Remedial construction activities at Site 2 will be performed by an Environmental Multiple Award Contract (EMAC) Contractor. Tetra Tech will be providing third party construction oversight during this non-time critical removal action.

1.1 BACKGROUND

Construction activities to be performed at Site 2 will include road stabilization, structure decontamination, demolition, transportation and disposal, well abandonment, excavation, transportation, and disposal of contaminated soils, backfill of excavation area, and site restoration.

Prior to the commencement of construction activities, the construction subcontractor will clear an area to build a construction road to allow for equipment access. Construction of this road will include grading, placement of geo-textile material, and approximately 6-inches of compacted angular aggregate.

Demolition of structures at the site consist of the excavation and disposal of approximately 135 cubic yards (275 tons) of concrete and steel associated with a former fire training pit, demolition of an pilot-scale air sparging/soil vapor extraction (AS/SVE) system, and demolition of a secondary containment structure for a 1,000 gallon aboveground storage tank (AST).

Air injection/soil vapor air extraction wells and free product recovery wells will be abandoned during this project. The estimated quantity of wells to be abandoned is 1,118 feet.

Approximately 6,540 (10,430 tons) cubic yards of petroleum contaminated soil will be excavated and removed off site. The depth of excavation will be approximately 6 feet below ground surface (bgs). The excavated soils will be transported and disposed of at an off-site State approved permitted landfill/treatment facility. The excavation area will be restored by backfilling with materials from a State approved borrow pit. During the initial backfill, dry application of approximately 1,100 pounds of calcium oxyhydroxide (CaO(OH)2) will be place in the bottom of the excavation area.

1.2 SCOPE AND OBJECTIVES

This document provides the details of activities related to construction oversight during this non-time critical removal action. The objectives of this project are as follows:

- Provide limited construction oversight during the start and completion of construction and provide full time oversight during excavation phase of the project.
- Collect environmental confirmation samples from the excavation area.
- Validate and interpret data from confirmation samples
- Prepare a Draft and Final Data and Field Activity Report

1.3 PLAN ORGANIZATION

This Work Plan provides general project implementation information and the approach to be used in conducting the construction oversight, confirmation sampling, and reporting activities. The plan consists of five sections. Section 1.0 provides the introduction and the scope and general objectives of the groundwater investigation. Section 2.0 provides a summary of the facility of the facility background and environmental setting. Section 3.0 details the activities associated with construction oversight and confirmation sampling to be conducted at Site 2. Section 4.0 presents the analytical evaluation methodology to be applied during the project. Section 5.0 briefly describes the reporting requirements.

2.0 SITE BACKGROUND

2.1 SITE DESCRIPTION

2.1.1 Site Description and Physical Setting

Site 2 – Fire Training Area is located on the eastern side of a 9-acre clearing in the south-central area of NWIRP Calverton facility and is shown on Figure 2-1. A circular, concrete pit in the southeast corner of the clearing was used to contain liquids for fire training exercises. The pit is approximately 80 feet in diameter and is located approximately 500 feet north and 800 feet west of the facility's south gate.

The eastern portion of the fire training area was partially excavated at an unknown time (IAS 1986). A small embankment up to 4 feet high is located along the eastern edge of the area, and a dirt access road is located along the southern edge. The fire training area is surrounded by woodlands. Some of the area within the clearing to the west of the concrete pit is covered by marsh-type vegetation, although there is no evidence of standing water. The water table is approximately 14 to 20 feet bgs.

2.1.2 Site History

The Fire Training Area was used by Northrop Grumman and Navy crash rescue crews as a training area since 1955, and possibly as early as 1952. According to the Initial Assessment Study (IAS), soil disturbances in the area were continuously evident in historical photographs. Before 1982, activities at the site consisted of clearing an area up to 100 feet or more in diameter and enclosing it with an earthen berm. A layer of water was then placed within the bermed area. Waste fuels, oils, and waste solvents were floated on the water and ignited. The IAS reports that up to 450 gallons of waste solvent were mixed with up to 2,100 gallons of waste fuel per year for use in the training exercises. Aircraft sections were sometimes placed in the area to simulate actual crash conditions. After 1975, waste solvents were reportedly no longer mixed with the waste fuels and oils to be ignited.

Fire fighting materials used in the training exercises included aqueous fire fighting foam, gaseous Halon 1301, water, and dry chemical extinguishers (NEESA, 1986).

The 6,000-gallon storage tank formerly located north of the fire training ring was used for an unknown period of time prior to 1982 to store waste fuels and solvents at the site. An unknown quantity of liquid was released from the tank in August 1982. The concrete pit was constructed after the spill cleanup to prevent further soil contamination by waste fuels. The 1,000-gallon AST was installed to replace the 6,000-gallon storage tank (Navy, 1986). A second spill of approximately 300 gallons of waste No. 2 fuel oil occurred in 1983. The spill emanated from a leak in the piping associated with the 1,000 gallon AST.

2.2 SITE CHARACTERISTICS

2.2.1 Geology

Based on previous subsurface investigations, Site 2 is underlain by three distinct lithofacies. The upper lithofacies range from 1 to 7 feet thick and consist of predominantly dark brown, brown, and orange, silty, fine-grained sand with varying amounts of peat and clay. Fill encountered at the site is always associated with the upper lithofacies. The middle lithofacies range from 54 to 78 feet thick and consist of light brown and tan fine-grained sand with varying amounts of medium-grained sand and pebbles. The middle lithofacies probably represent undisturbed glacial deposits. The lower lithofacies consist of gray, silty clay. The subsurface geology of Site 2 is consistent with that found in other areas of the facility.

2.2.2 Hydrogeology

Groundwater in the glacial deposits occurs under unconfined conditions. The depth to groundwater ranged from 11.68 to 29.90 feet below the ground surface in 1995. The elevation of the water table is approximately 40 to 43 feet above mean sea level. Groundwater elevation data was derived from static water level measurements of wells FT-MW-01-I/S through FT-MW-07-S. Based on water level measurements collected concurrent with free product monitoring between 1994 and 1997, depth to water across the site ranged between 12 and 20 feet. Seasonal fluctuations in the water table on the order of 3 feet are normal. The seasonal high water table occurs in spring, between March and May. The seasonal low water table occurs in late fall and early winter.

The direction of groundwater flow is to the south-southeast. Based upon previous water level measurements, there is no vertical gradient present. The hydraulic conductivity calculated for glacial deposits ranges from 0.038 feet per minute (ft/min) (55 ft/day) to 0.077 ft/min (111 ft/day) for sediments shallower than 28 feet and from 0.024 ft/min (35 ft/day) to 0.056 ft/min (81 ft/day) for sediments deeper than 64 feet.

Surface water runoff from the Fire Training Area would generally flow to the southeast following local topography. However, there is no evidence of overland flow of surface water or associated drainage channels. The nearest potential receiving water is Swan Pond, located 2,000 feet to the southeast.

2.3 ENVIRONMENTAL INVESTIGATION HISTORY

In 1982 and 1983, two spills of waste oil were reported at the Fire Rescue Training Area. As a result of the 1982 spill, the entire Fire Rescue Training Area was upgraded. Concrete berms were installed to

contain the oil and water used in the training exercises. Piping in the area was modified to prevent spills (NEESA, 1986).

Marine Pollution Control (MPC) of Calverton, New York removed 327 cubic yards of contaminated soil in 1982 because of the spill that occurred in August 1982 from the 6,000-gallon storage tank. In addition, four groundwater monitoring wells were installed in the spill area. Following the second spill of approximately 300 gallons in 1983, seven additional monitoring wells were installed by MPC to monitor potential contamination resulting from the spills (TtNUS, 2005a).

A groundwater recovery well and oil-water separation system was installed at the Fire Training Area in December 1987. This system consisted both of an active and a passive free product recovery system. The active recovery system included a groundwater pumping well, an oil recovery well, and an oil/water separator tank. The passive recovery system consisted of hydrophobic filters located in shallow wells. The active recovery system was shut down in 1993. Passive free product recovery continued until 1996. By December 1996, approximately 325 gallons of petroleum product was removed from this site (TtNUS, 2005a).

In 1987, sampling activities at the Fire Training Area consisted of collecting 15 soil samples at 5 soil boring locations, 6 groundwater samples, and free product samples found in two of the monitoring wells. Each of the samples was analyzed for volatile organic compounds (VOCs), semi volatile organic compounds (SVOCs), metals, cyanide (CN), polychlorinated biphenyls (PCBs), and pesticides.

Results of the soil boring samples indicated significant contamination by VOCs and SVOCs, PCBs, and pesticides. Contamination by inorganic parameters was limited. Volatile and semi volatile organic tentatively identified compounds (TICS) were identified in all soil-boring samples

Groundwater monitoring results from the six monitoring wells indicated the presence of significant contamination by VOCs, SVOCs, and inorganic compounds.

The results of the chemical analysis of the free product layer indicated that significant concentrations of chlorinated VOCs were present. A limited number of significant TICS were identified.

In 1994 and 1995, a RCRA investigation was conducted (Haliburton NUS, 1995). Groundwater was collected from 24 temporary and 11 permanent monitoring wells and analyzed for Target Compound List (TCL) VOCs, SVOCs, pesticide/PCB organic compounds, Target Analyte List (TAL) metals/CN, and hexavalent chromium.

VOCs were detected at relatively high concentrations in Site 2 soil. The fire-training pit was the most likely primary source area. VOCs detected in soil included solvents and fuel-related contaminants. Solvents detected included 2-butanone (5,900 micrograms per kilogram [µg/kg]), chloroethane (330 µg/kg), dichlorobenzene (900 µg/kg), tetrachloroethene (470 µg/kg), and 1, 1, 1-trichloroethane (9,900 µg/kg). Fuel-related contaminants detected include ethylbenzene (3,700 µg/kg), toluene (6,100 µg/kg), and xylenes (85,000 µg/kg).

Groundwater testing results during the RCRA Facility Investigation (RFI) exhibited VOCs at concentrations above federal Maximum Contaminant Levels (MCLs) or New York groundwater quality standards: chloroethane (1,100 micrograms per liter [µg/L]), 1 ,1-dichloroethane (1,200 µg/L), toluene (320 µg/L), 1 ,1, 1-trichloroethane (140 µg/L), and xylenes (230 µg/L).

The area of these detections was addressed by the pilot-scale AS/SVE system that started operation in 1995. By June 1997, the maximum detected chlorinated VOC concentration was 78 µg/L (1, 2-dichloroethene) and the maximum detected fuel-related concentration for xylenes was 91 µg/L. The state groundwater standard for most VOCs is 5 µg/L. PCBs (18 µg/L), Polycyclic aromatic hydrocarbons (PAHs) (3 µg/L), and lead (30.8 µg/L) were detected at concentrations above federal MCLs or state groundwater quality standards. Phthalates and pesticides were detected at concentrations below these standards in several monitoring well samples. Based on the similarity between chemicals found in Site 2 soil and groundwater, it is likely that soil contaminants have affected groundwater.

By 2000, approximately 80 pounds of target VOCs had been removed. In addition, an estimated 30,000 pounds of organics had been destroyed through biodegradation. VOC concentrations in soil and groundwater had been reduced by approximately 70 to 95 percent.

In 1997, a Phase 2 RI was conducted (TtNUS, 2001). Four on-site and four off-site temporary monitoring wells were installed. Groundwater samples were collected from various depths at each location and analyzed for VOCs. In addition, one shallow depth and one intermediate depth permanent monitoring well were installed. Two rounds of groundwater samples were collected from the permanent monitoring wells and analyzed for VOCs. The results of the sampling indicated that the nature and extent of groundwater contamination had been defined, and there were no remaining data gaps.

A pilot-scale AS/SVE system operated seasonally in this area at the site from 1995 to 2000 and removed an estimated 30,000 pounds of petroleum hydrocarbons through biodegradation. However, this system was not completely effective at cleaning up of the site. The shallow petroleum-contaminated soil likely inhibited air flow at some locations and therefore the efficiency of this test.

Mechanical and manual free product collection at the site removed approximately 2,400 pounds of petroleum hydrocarbons from 1987 through approximately 2000. Floating free product can be periodically observed at the site, but not at quantities that are effectively recoverable (less than 6 inches).

The Navy conducted an Engineering Evaluation/Cost Analysis (EE/CA) in 1998 for several sites at NWIRP Calverton, including Site 2 (TtNUS, 1998). The analysis recommended that free product recovery be restarted at Site 2. Groundwater extraction tests were conducted in 1999 in anticipation of a new free product recovery system (vapor-assisted oil skimming). However, based on subsequent field-testing, several interferences were noted that impacted the ability to successfully extract and treat the groundwater. An alternate recommendation was made to recover product using passive techniques (i.e. absorbent pillows).

2.4 DESCRIPTION OF CURRENT CONDITIONS

In May 2005, the Navy conducted a soil investigation at Site 2 to better define subsurface conditions. This field effort supplements previous investigations that had identified an area of shallow petroleum-contaminated soils [1 to 5 feet (bgs)] located south of the fire training ring and floating free product located near the water table [approximately 14 feet (bgs)] south and east of the fire training ring.

During the May 2005 soil investigation, field observations and photo ionization detector (PID) readings were used to characterize the subsurface soils. Soil samples were also collected and analyzed for VOCs, PAHs, PCBs, pesticides, metals, and total petroleum hydrocarbons (TPH) - diesel range organics (DRO) and gasoline range organics (GRO). Most of the samples had detectable concentrations of metals, PAHs, and pesticides, but not at concentrations greater than TAGM 4046. Some samples had detections of VOCs, but not at concentrations greater than TAGM 4046.

Based on site data and potential remedial options, the waste/contaminated materials at Site 2 – Fire Training Area are divided into five categories, as follows:

- Shallow petroleum-contaminated soil
- Deep petroleum-contaminated soil
- Contaminated surface soil (coal)
- Other contaminated subsurface soil
- Debris (e.g. concrete, steel, and plastic)

Shallow Petroleum-Contaminated Soil

Shallow petroleum-contaminated soil is located underneath, south, and southeast of the Fire Training Ring (see Figures 2-2 and 2-3). This area may represent a former earthen depression that was used for fire training activities and that was later backfilled with petroleum-contaminated soil. Spills and leaks may have also accumulated in this area. Debris including wood and bricks is present in this material. This material is mostly continuous over a 0.5 acre area, but there may be some pockets of clean fill. The material extends from near the surface to a maximum depth of approximately 5 feet. The thickness of the material varies from approximately 1 foot around the edges to 5 feet in the middle.

Approximately 4,300 cubic yards or 7,000 tons of shallow petroleum-contaminated soil are present at the site. The shallow petroleum-contaminated soil has an average TPH-DRO concentration of 3,100 mg/kg (0.31 percent), and a maximum TPH-DRO concentration of 11,000 mg/kg (1.1 percent). PCBs were detected in 6 of 9 samples with a maximum concentration of 1.8 mg/kg, none of which exceeded TAGM 4046 subsurface PCB screening criteria. PAHs were detected in 9 of 9 samples with 5 exceeding TAGM 4046 screening criteria.

Deep Petroleum-Contaminated Soil

Deep petroleum-contaminated soil is located underneath, south, and southeast of the Fire Training Ring (see Figures 2-2 and 2-3). This area was likely formed from free petroleum product migrating from the surface to the water table and then spreading out along the water table. The water table at the site averages approximately 14 feet below ground surface and fluctuates up 3 feet.

The fluctuations in the water table would cause the free product to create a smear zone near and below the average water table. The deep petroleum-contaminated soil covers an area of approximately 0.5 acres, but may not be completely delineated to the southeast. The contamination is centered near the water table and has an approximate average thickness of 1 foot.

Approximately 920 cubic yards or 1,500 tons of deep petroleum-contaminated soil are present at the site. The deep petroleum-contaminated soil has an average TPH-DRO concentration of 8,100 mg/kg (0.81 percent), and a maximum TPH-DRO concentration of 13,000 mg/kg (1.3 percent). The samples were not analyzed for other chemical constituents, but likely contain low levels of PCBs and PAHs at concentration similar to that observed in the shallow petroleum-contaminated soils. There is an estimated 24,100 pounds of petroleum hydrocarbons in the deep petroleum-contaminated soil.

Contaminated Surface Soil (Coal)

Some of the surface soil at the site contains residual petroleum contamination (see Figure 2-3). Material in this category includes pea-sized coal that was used as a road base material. The surface soil would have been impacted by historic leaks and spills at the site and may have been treated with oil to suppress dust. The material is relatively loose, with minimal natural organics and/or vegetation.

The material is mostly continuous over a 0.8 acre area, of which 0.5 acres is already being addressed by the shallow petroleum-contaminated soil area calculation. There may also be some pockets of clean fill in this area. The material extends from near the surface to a maximum depth of approximately 12 inches.

Approximately 1,500 cubic yards or 2,500 tons of contaminated surface soil is present at the site, of which 1,200 cubic yards or 1,900 tons is being addressed with the shallow petroleum-contaminated soil volume calculation. The contaminated surface soil has an average TPH-DRO concentration of 360 mg/kg (0.036 percent) and a maximum TPH-DRO concentration of 1,100 mg/kg (0.11 percent). PCBs were detected in 5 of 5 samples with a maximum concentration of 2.03 mg/kg. PAHs were detected in the soils at concentrations greater than TAGM 4046 in 2 of 5 samples. Excluding the surface soil being addressed with the shallow petroleum-contaminated soil, there is an estimated 430 pounds of petroleum in this material.

Other Contaminated Soil

Other contaminated soil at the site includes material that is not addressed by the shallow or deep petroleum-contaminated soil or the contaminated surface soil. This material includes soil that is beyond the horizontal extent or between the shallow and deep petroleum-contaminated soils.

The other contaminated soil is mostly clean coarse-grained sands that continue to be impacted by shallow petroleum-contaminated soils. It is also characterized by one or more, 3- to 6-inch thick layers of black stained soils. Based on the horizontal layout, the thin layer may represent a historic water table elevation (see Figure 2-3). One continuous thin layer of black stained soil is present at a depth ranging from 7 to 12 feet below ground surface. The areal extent of this layer is similar to that of the shallow petroleum-contaminated soil (0.5 acres). Other less extensive thin black stained layers or pockets of contamination are also present at the site.

Based on an assumed area extent of 0.5 acres and the distance between the shallow and deep petroleum-contaminated soils (8 feet), there is approximately 14,000 pounds of petroleum contamination in this soil.

The other contaminated soil has an overall average TPH-DRO concentration of 620 mg/kg (0.064 percent). However the TPH-DRO concentration averages 3,000 mg/kg (0.3 percent) within the thin black stained soil

and 68 mg/kg (0.0068 percent) elsewhere. PCBs were detected in 3 of 8 samples with a maximum concentration of 0.17 mg/kg. PAHs were detected in the soils at concentrations greater than TAGM 4046 in 2 of 8 samples.

Debris

Debris at the site consists of: concrete and steel present in the Fire Training Ring; a secondary containment structure for the removed 1,000-gallon aboveground fuel tank; plastic pipe used in the former AS/SVE system; plastic sheeting around the SVE wells; AS/SVE blowers; a 30-gallon moisture separator; a wooden stockade fence; miscellaneous electrical fuse boxes and control panels; and a buried underground electrical line.

Based on site measurements, the Fire Training Ring contains approximately 135 cubic yard (275 tons) of concrete. The other debris at the site can be placed within two 20-cubic yard dumpsters.

2.5 ANTICIPATED NON-TIME CRITICAL REMOVAL ACTION

Based upon the approved Action Memorandum for Site 2, a Removal Action Work Plan (RAWP) was developed by the EMAC Contractor outlining tasks to be performed for the NTCRA at Site 2. This NTCRA is anticipated to occur during late fall of 2008. The following provides a list of activities to be performed during this event:

- Decontamination, Demolition, Transportation, and Disposal of existing structures
- Abandonment of the air injection/soil vapor air extraction wells and free product recovery wells
- Removal of the AS/SVE system
- Excavation, Transportation, and Disposal of petroleum impacted soil and gravel
- Dry application of a slow release oxygen compound in the area of excavation
- Site restoration (backfilling, grading, and seeding)

3.0 PLANNED ACTIVITIES

3.1 FIELD OVERSIGHT

Limited field oversight will be provided during the start and completion of construction activities. Prior to commencement of construction activities, Tetra Tech will establish the bounds of the excavation area. The limits of excavation will be delineated by using global positioning system (gps) technology. The boundaries of excavation will be field verified using measurements from known site features. Full time oversight will be provided during the excavation phase of the project. It is anticipated that the excavation portion of this project will take approximately 2 months (8 weeks) to complete. Weekly progress reports will be prepared and submitted to the Navy during the 2-month excavation phase of the project. Construction oversight by Tetra Tech will not be provided during the site restoration portion of the project.

During the excavation, the sidewalls of the 6-foot excavation and the floor of the surficial coal excavation will be evaluated based on the presence of visual staining and elevated photo ionization detector (PID) readings. In the event that the floor or sidewalls contains black stained soils that are indicative of petroleum saturated soils or PID readings greater than 10 parts per million (ppm), additional excavation in that area will be considered prior to sampling. Factors to be considered in determining the need for additional excavation are the depth and thickness of the contaminated soil and the magnitude of petroleum (free product) in the soils. Since the floor of the 6-foot excavation will be treated with an oxygen releasing compound to promote biological degradation, the decision to continue with the excavation downward is not anticipated unless large quantities of petroleum saturated soil are encountered. For the side walls, additional excavation is anticipated if the petroleum contaminated soil is relatively shallow (less than 3 feet) and the thickness of the contamination is greater than 6 inches.

3.2 CONFIRMATION SAMPLING

Upon completion of excavation of the contaminated soils, confirmation samples will be collected to ensure that all significant contamination has been removed from the shallow soils. Figure 3-1 presents the approximate locations of the samples to be collected form the area of excavation. A total of 20 soil confirmation samples will be collected from the excavation area (12 sidewall and 8 surfical coal excavation floor samples). A total of 12 soil samples will be collected from the sidewalls of the 6-foot excavation. Sidewall samples will be located at points evenly distributed along the excavation sidewall.

Sidewall samples will be submitted for PAH and VOC analysis. Samples collected for PAHs from each sidewall location will be a composite from depth intervals of 1, 2, 3, 4, and 5 feet from top of excavation. Samples collected for VOCs from each sidewall location will be a grab sample. A PID will be used to

determine the depth interval for the VOC grab sample. The depth interval which exhibits the highest PID reading will be the interval from which the VOC grab sample will be collected from. In the event that the PID field screening does not yield a distinct elevated reading, the sample interval for VOCs will be collected from the 3 foot from top of excavation interval.

Approximately 8 soil samples will be collected from the floor of the surficial coal excavation area. Floor soil samples will be collected from points evenly distributed across the excavation floor. If based on the sample results, additional excavation is needed; additional confirmation samples may be collected. Upon collection, each soil confirmation sample will be marked with a pin flag or stake.

Samples collected for PAH and PCB analysis will be collected from the 0 to 6-inch depth interval using disposable sample trowels. Samples for VOCs will be collected at a depth of approximately 2 to 4 inches using Encore® samplers. Samples will be collected following soil sampling procedures outlined in Tetra Tech Standard Operating Procedures (SOP [SA-1.3]). Sampling related field information will be recorded in a field log book as well as sample log sheets in accordance with Tetra Tech SOP SA-6.3. The samples will be analyzed for PAHs, PCBs, and VOCs by a Navy-approved laboratory. All samples will be shipped to the laboratory via overnight courier delivery service. Due to the preservation requirements for the samples collected for VOCs, samples will be required to be shipped on the same day that they are collected. The analytical laboratory will provide sample results to the Tetra Tech project manager within 36 hours of receipt of the confirmation samples (approximately two days from sample collection). Evaluation of the analytical results is presented in Section 4.0.

Quality Control/Quality Assurance (QA/QC) samples will be collected for he confirmation samples. Duplicate samples will be collected at a rate of one duplicate sample per ten confirmation samples (3 total). It is anticipated that four trip blanks will be collected for the duration of this project. Table 3-1 provides a summary of the sampling program and the QA/QC samples associated with this project. Table 3-2 provides the sampling nomenclature for this project. Sample container, preservation, and holding time requirements are listed in Table 3-3.

3.3 SURVEYING

A gps unit capable of sub meter accuracy will be used to survey each soil confirmation point. Once confirmation samples indicate that no further excavation will be required, the perimeter of the excavation will be surveyed using the gps unit.

4.0 DATA EVALUATION

Section 4.0 describes the methodologies that will be used to evaluate and apply the analytical data collected for the soil confirmation samples.

4.1 DATA EVALUATION

The field data collected will be screened against TAGM 4046 and Part 375 Soil Cleanup Objectives. Values for both protection of human health and protection of groundwater are presented.

The VOC parameter list presented in Table 4-1 is based on those chemicals that were found in a Site groundwater monitoring well at a concentration greater than MCLs (Tetra Tech, 2008). These parameters are being evaluated in site soils to address the possibility that site soils are acting as a continuing source of groundwater contamination.

The SVOC parameter list presented in Table 4-1 is based on a comparison of the 2005 soil sample results with the potential screening criteria. Of the SVOC, only five PAHs were found at concentrations that exceed potential screening criteria. The PAHs are likely present at the site as a component of residual petroleum contamination.

For evaluation of confirmation samples, the sidewall sample results will be initially compared to the minimum screening criteria presented in Table 4-1. If the results are less than the minimum screening criteria, the areas will be classified as clean. Next the sample results will be compared to the Part 375 Residential and Protection of Groundwater Criteria. If the sidewall sample results exceed these criteria, additional excavation will be conducted in the area(s) with exceedances. Visual staining and PID readings will be used in the field to help determine appropriate excavation areas. Based on location specific VOC results, the Navy may elect to conduct additional floor and sidewall excavations.

5.0 REPORTING REQUIREMENTS

This Section presents the reporting requirements for construction oversight of this project. A draft and final version of the Data and Field Activity Summary Report will be prepared and submitted to NYSDEC for review and concurrence. The purpose of the Data and Field Activity Summary Report is to present the analytical results of the confirmation samples as well as to document field activities completed during the excavation portion of the project.

5.1 Report

Analytical data associated with the soil confirmation samples will be presented in the Data and Field Activity Summary Report. The report will summarize the site history, describe the field activities, present the analytical results, and provide a summary of construction activities completed. Analytical data will be presented in tables and figures. Laboratory analytical validation reports will be presented in the appendix of the report. Weekly construction progress reports associated with the soil excavation portion of the project will be presented in a separate appendix. The report will be submitted in draft form for review. Comments received on the draft will be responded to in writing and a revised report will be issued after resolution of these comments. The report issued with resolved comments will be the final report.

REFERENCES

Halliburton NUS Corporation (HNUS), 1992. Final Site Investigation for Naval Weapons Industrial Reserve Plant, Calverton, New York. April.

HNUS,1995. RCRA Facility Investigation for Naval Weapons Industrial Reserve Plant, Calverton, New York. August.

Navy, 1986. Initial Assessment Study of NWIRP Bethpage and NWIRP Calverton, New York. NEESA 13-100, Rogers, Golden & Halpern, Philadelphia, PA. December.

New York State Department of Environmental Conservation (NYSDEC), 1994. Technical and Administrative Guidance Memorandum (TAGM) No. 4046, Determination of Soil Cleanup Objectives and Cleanup Levels.

Tetra Tech NUS, Inc., (TtNUS, 1998). Engineering Evaluation/Cost Analysis for Sites 2, 6A, 7, and 10B, Naval Weapons Industrial Reserve Plant, Calverton, New York. Prepared for Northern Division, Naval Facilities Engineering Command, Lester, Pennsylvania, September.

Tetra Tech NUS, Inc. (TtNUS), 2001. Phase 2 Remedial Investigation for Site 2 – Fire Training Area Naval Weapons Industrial Reserve Plant (NWIRP), Calverton, New York. February.

Tetra Tech NUS, Inc. (TtNUS), 2005a. Engineering Evaluation/Cost Analysis (EE/CA) Naval Weapons Industrial Reserve Plant (NWIRP) Calverton, New York. June.

Tetra Tech NUS, Inc., (TtNUS, 2005b). Data Summary Report for Site 2 – Fire Training Area, Naval Weapons Industrial Reserve Plant, Calverton, New York. Prepared for Northern Division, Naval Facilities Engineering Command, Lester, Pennsylvania, September.

Tetra Tech NUS, Inc., (TtNUS, 2008). Data Summary Report for Groundwater Investigation at Site 2 – Fire Training Area, Naval Industrial Reserve Plant, Calverton, New York. Prepared for Mid-Atlantic Division, Naval Facilities Engineering Command, Norfolk, Virginia.

TABLE 3-1
SUMMARY OF SAMPLING AND ANALYSIS PROGRAM
SITE 2 – FIRE TRAINING AREA
NAVAL WEAPONS INDUSTRIAL RESERVE PLANT
CALVERTON, NEW YORK

Sample Description	Analytical Parameters	Analytical Method	Number of Samples	Field Duplicate[1]	Trip Blank[2]	MS/MSD[3]
Soils						
6-Foot Excavation Sidewall and Surficial Coal Floor	TCL VOC	SW-846 5035/8260B	27	3	4	2
	PAHs	SW-846 8310 or 270 SIM	27	3	0	2
Surficial Coal Floor	PCBs	SW-846 8082/8181A	6	1	0	1

1 Field Duplicates - A sample split in the field and submitted separately to the laboratory. The duplicate is analyzed for the same parameters as the first sample from the same sample location. This sample is collected to assess precision from overall sample handling, preparation, and analysis. These samples are analyzed at a rate of one per ten environmental samples.

2 Trip Blank – Analytical laboratory provided 40ml VOA vials containing analyte-free water. This sample is analyzed to verify that no contamination occurred during collection and transport of the samples. These samples are analyzed at a rate of one per sample cooler per day for TCL VOC analysis.

3 MS/MSD -Samples prepared by the laboratory to evaluate sample preparation, handling, and analysis. These samples are analyzed at a rate of one per 20 environmental samples.

TCL VOCs – Target Compound List Volatile Organic Compound, plus naphthalene
PAHs – Polycyclic Aromatic Hydrocarbons
MS/MSD – Matrix Spike/Matrix Spike Duplicate
PCBs – Polychlorinated biphenyls

TABLE 3-2
SAMPLE IDENTIFICATION
SITE 2 - FIRE TRAINING AREA
NAVAL WEAPONS INDUSTRIAL RESERVE PLANT
CALVERTON, NEW YORK

Sample ID	Sample Location	Sample Matrix	Sample Method	Sample Type	Depth Interval	TCL VOCs	TCL PAHs	PCBs
FT-SO300	6-Foot Excavation Sidewall	Soil	VOCs- Encore® sampler, PCBs/PAHs - hand trowel	grab	TCL VOC: 2-4" PCBs/PAHs: 0-6"	X	X	
FT-SO301	6-Foot Excavation Sidewall					X	X	
FT-SO302	6-Foot Excavation Sidewall					X	X	
FT-SO303	6-Foot Excavation Sidewall					X	X	
FT-SO304	6-Foot Excavation Sidewall					X	X	
FT-SO305	6-Foot Excavation Sidewall					X	X	
FT-SO306	6-Foot Excavation Sidewall					X	X	
FT-SO307	6-Foot Excavation Sidewall					X	X	
FT-SO308	6-Foot Excavation Sidewall					X	X	
FT-SO309	6-Foot Excavation Sidewall					X	X	
FT-SO310	6-Foot Excavation Sidewall					X	X	
FT-SO311	6-Foot Excavation Sidewall					X	X	
FT-SO312	Surficial Coal Floor					X	X	
FT-SO313	Surficial Coal Floor					X	X	
FT-SO314	Surficial Coal Floor					X	X	
FT-SO315	Surficial Coal Floor					X	X	
FT-SO316	Surficial Coal Floor					X	X	X
FT-SO317	Surficial Coal Floor					X	X	X
FT-SO318	Surficial Coal Floor					X	X	X
FT-SO319	Surficial Coal Floor					X	X	X

TCL VOC - Target Compound List Volatile Organic Compounds
PAH - Polycyclic Aromatic Hydrocarbons
PCBs - Polychlorinated biphenyls

TABLE 3-3
SAMPLE CONTAINER, PRESERVATION, AND HOLDING TIME REQUIREMENTS
SITE 2 – FIRE TRAINING AREA
NAVAL WEAPONS INDUSTRIAL RESERVE PLANT CLAVERTON
CALVERTON, NEW YORK

Parameter	Analytical Method	Container	Preservation	Holding Time from Time of Sample Collection
Soil				
VOCs	SW-846 5035/8260B	3 5 gram EnCore samplers	Cool 4°C	Lab to preserve within 48 hours; Analysis within 14 days of collection
PAHs	SW-846 8270C SIM	4 oz clear wide mouth	Cool 4°C	7 days to extraction; 40 days to analysis

VOCs – Volatile organic compounds.
PAH- Polycyclic aromatic hydrocarbons
°C- degrees Centigrade.
oz-ounce.
SIM – Selective ion monitoring.

TABLE 4-1
SCREENING DATA
SITE 2 - FIRE TRAINING AREA
NWIRP CALVERTON, NEW YORK

	NYDEC Part 375-6.8(b) Protection of Public Health		TAGM 4046		2005 Sample Results[1]	
Parameter	**Residential**	**Protection of Groundwater**	**Soil Clean Up Objective to Protect Groundwater**	**USEPA Health Based - Residential**	**Range of Detections**	**Frequency of Exceedances**
VOCs (ug/kg)						
1,1-Dichloroethane	19,000	270	200	NA	ND - 4.8	0 of 5
1,2-Dichlorobenzene	100,000	1,100	7,900	NA	ND	0 of 5
cis-1,2-Dichloroethene	59,000	250	NA	NA	ND - 10	0 of 5
1,4-Dichlorobenzene	9,800	1,800	8,500	NA	ND	0 of 5
Chlorobenzene	100,000	1,100	1,700	2,000,000	ND	0 of 5
Ethylbenzene	30,000	1,000	5,500	8,000,000	ND - 25	0 of 5
Toluene	100,000	700	1,500	20,000,000	ND - 38	0 of 5
Vinyl chloride	210	20	120	NA	ND - 1.1	0 of 5
Xylene (total)	100,000	1,600	1,200	200,000,000	ND - 210	0 of 5
SVOCs (ug/kg)						
Benz(a)anthracene	1,000	1,000	3,000	**224**	ND - 13,000	3 of 35
Benzo(a)pyrene	1,000	22,000	11,000	**61**	ND - 12,000	7 of 35
Benzo(b)flourene	**1,000**	1,700	1,100	NA	ND - 11,000	1 of 35
Benzo(k)flourene	**1,000**	1,700	1,100	NA	ND - 7,200	1 of 35
Chrysene	1,000	1,000	**400**	NA	ND - 1,200	3 of 35
Dibenz(a,h)anthracene	330	$1x10^6$	165,000,000	**14.3**	ND - 1,800	8 of 35
Indeno(1,2,3-cd)pyrene	**500**	8,200	32,000	NA	ND - 7,700	3 of 35
PCBs (ug/kg)						
Aroclor-1248	**1,000**	3,200	10,000	**1,000**	ND - 1,100	2 of 35

NA - Not available.
Bolded Items indicate critieria exceedance.
VOC list was selected based on 2008 Site 2 groundwater results, in which parameter exceeded MCLs in one or more site monitoring wells.
SVOC list includes only those parameters that exceeded a potential screening critiera.
[1] Data collected from 2005 Soil Investigation

ACAD:1610CM30.dwg 06/27/07 MF PIT

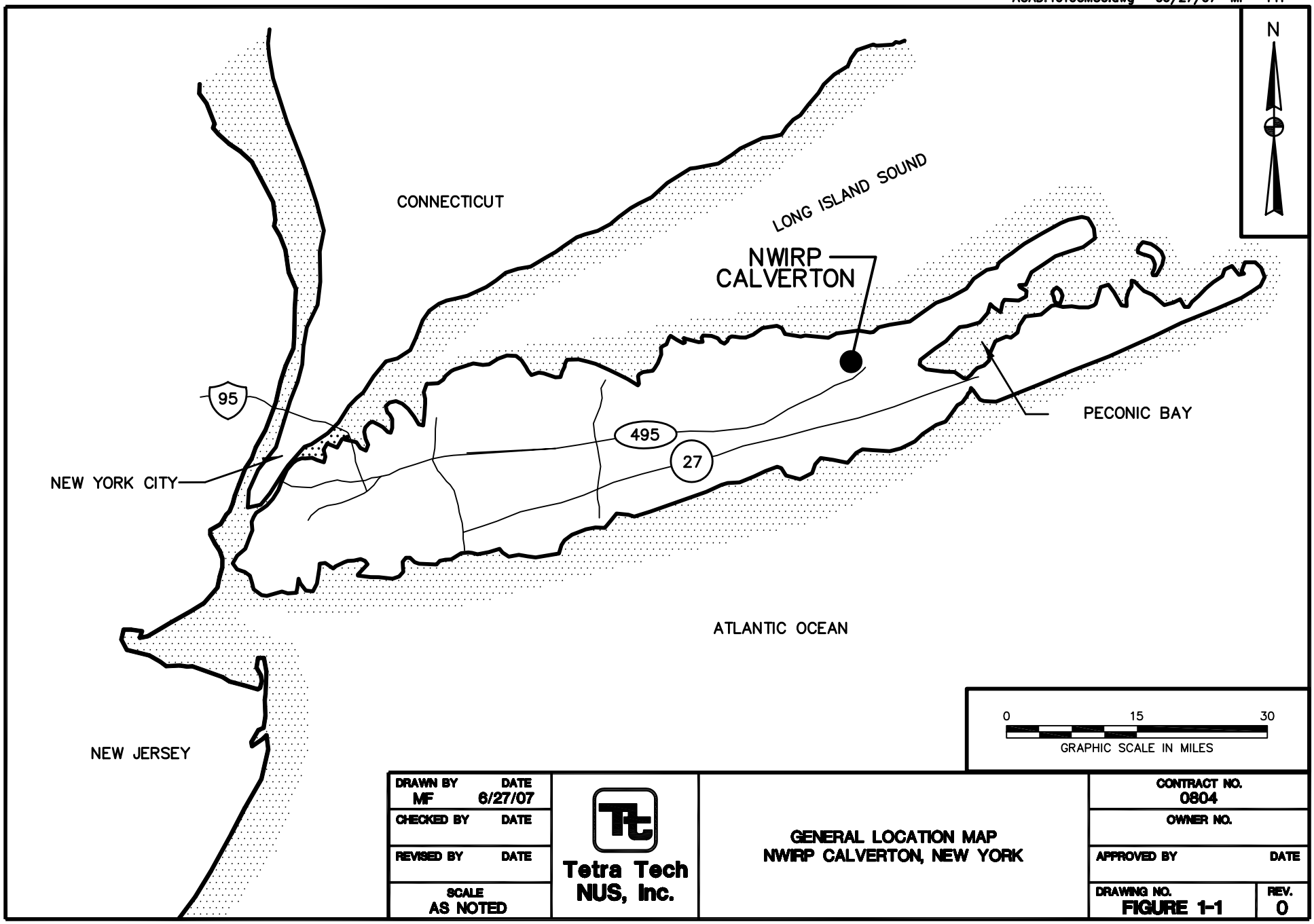

DRAWN BY MF	DATE 6/27/07	Tetra Tech NUS, Inc.	GENERAL LOCATION MAP NWIRP CALVERTON, NEW YORK
CHECKED BY	DATE		
REVISED BY	DATE		
SCALE AS NOTED			

CONTRACT NO. 0804	
OWNER NO.	
APPROVED BY	DATE
DRAWING NO. FIGURE 1-1	REV. 0

FORM CADD NO. TTNUS-AH.DWG - REV 1 -9/10/98

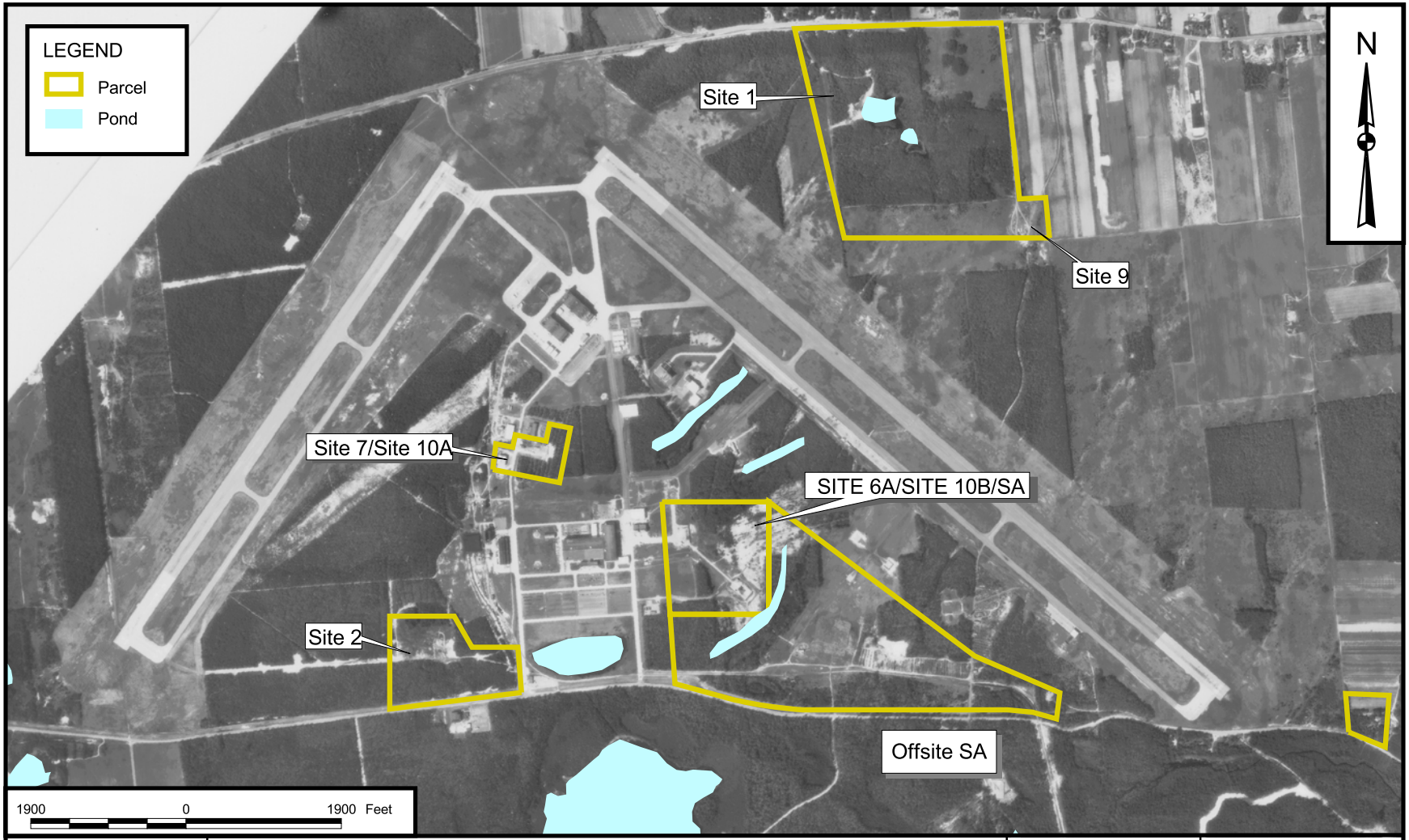

DRAWN BY J. LAMEY	DATE 11/22/99	Tetra Tech NUS, Inc.	CONTRACT NUMBER 7398 / OWNER NUMBER 0270
CHECKED BY ____	DATE ____	SITE LOCATION MAP NWIRP CALVERTON, NEW YORK	APPROVED BY ___ / DATE ___
COST/SCHEDULE-AREA			APPROVED BY ___ / DATE ___
SCALE AS NOTED			DRAWING NO. FIGURE 1-2 / REV 0

P:\GIS\NWIRP_CALVERTON\SURFACE_WATER_HYDROLOGY.APR SITE LOCATION MAP 06/28/07 SS

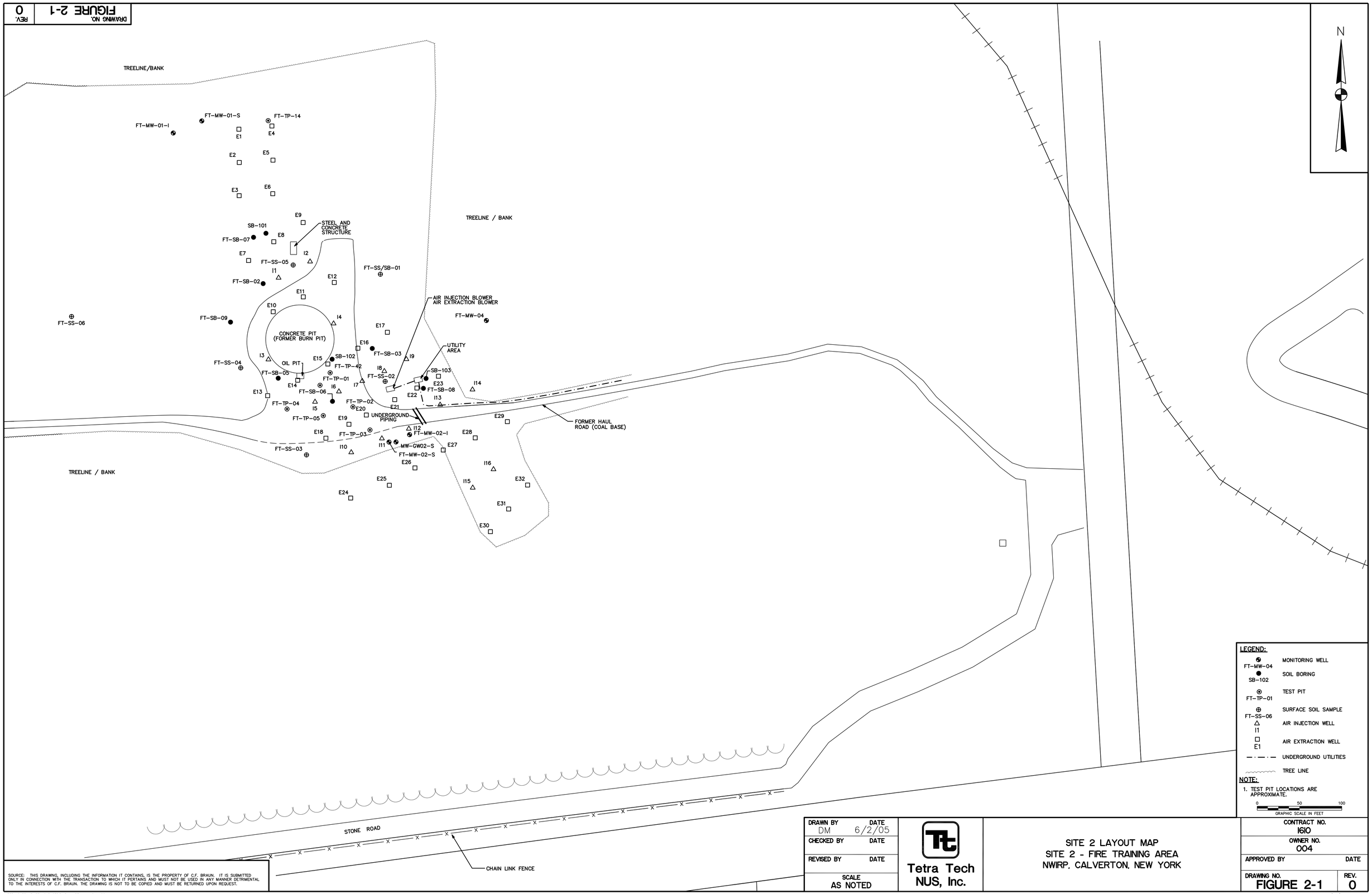

DRAWN BY	DATE
DM	6/2/05
CHECKED BY	DATE
REVISED BY	DATE
SCALE AS NOTED	

Tetra Tech NUS, Inc.

SITE 2 LAYOUT MAP
SITE 2 - FIRE TRAINING AREA
NWIRP, CALVERTON, NEW YORK

CONTRACT NO. 1610
OWNER NO. 004
APPROVED BY DATE
DRAWING NO. FIGURE 2-1
REV. 0

SOURCE: THIS DRAWING, INCLUDING THE INFORMATION IT CONTAINS, IS THE PROPERTY OF C.F. BRAUN. IT IS SUBMITTED ONLY IN CONNECTION WITH THE TRANSACTION TO WHICH IT PERTAINS AND MUST NOT BE USED IN ANY MANNER DETRIMENTAL TO THE INTERESTS OF C.F. BRAUN. THE DRAWING IS NOT TO BE COPIED AND MUST BE RETURNED UPON REQUEST.

DRAWING NO. FIGURE 2-1 REV. 0

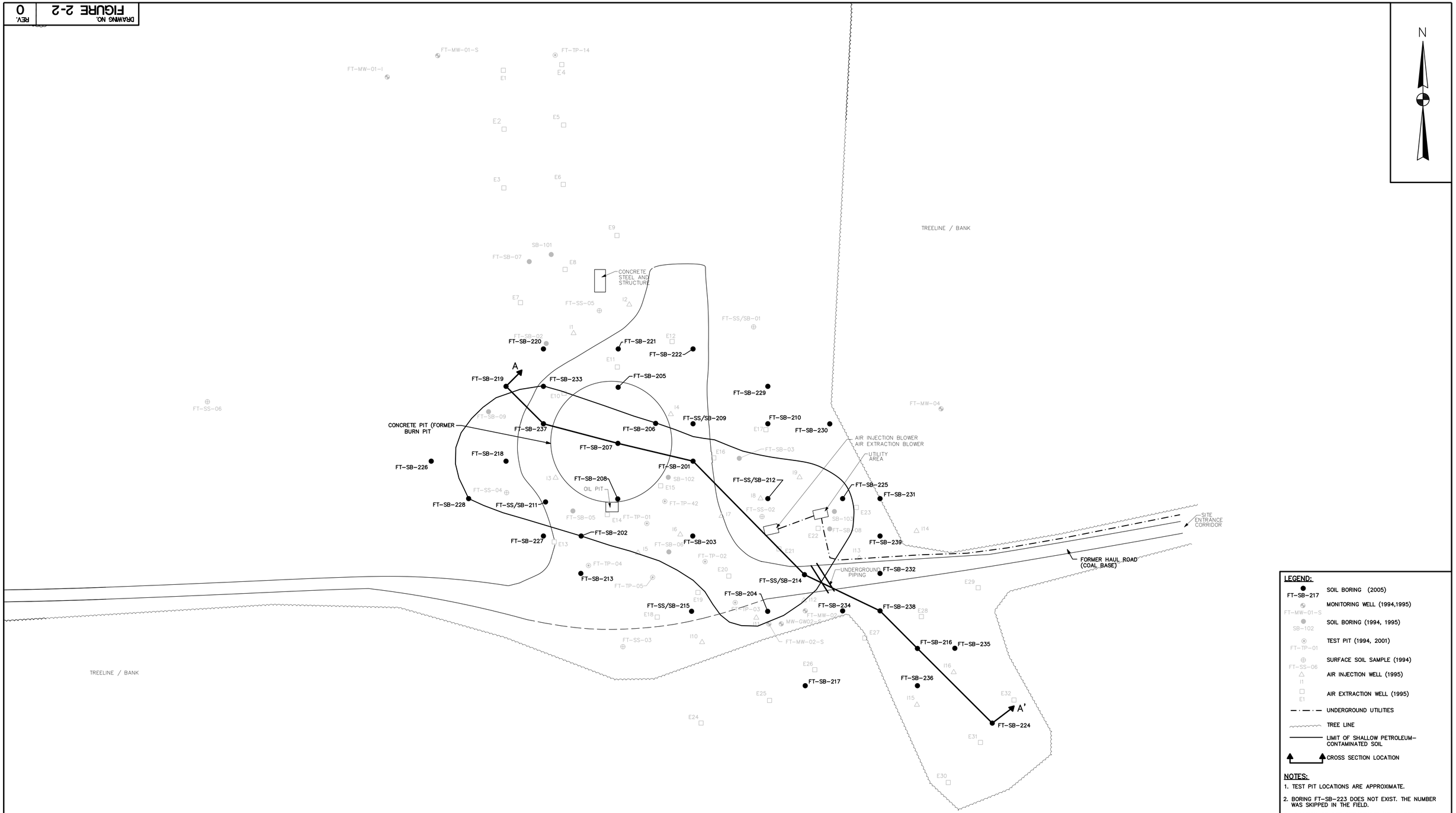

LEGEND:

- FT-SB-217 — SOIL BORING (2005)
- FT-MW-01-S — MONITORING WELL (1994,1995)
- SB-102 — SOIL BORING (1994, 1995)
- FT-TP-01 — TEST PIT (1994, 2001)
- FT-SS-06 — SURFACE SOIL SAMPLE (1994)
- I1 — AIR INJECTION WELL (1995)
- E1 — AIR EXTRACTION WELL (1995)
- UNDERGROUND UTILITIES
- TREE LINE
- LIMIT OF SHALLOW PETROLEUM-CONTAMINATED SOIL
- CROSS SECTION LOCATION

NOTES:

1. TEST PIT LOCATIONS ARE APPROXIMATE.
2. BORING FT-SB-223 DOES NOT EXIST. THE NUMBER WAS SKIPPED IN THE FIELD.
3. LOCATION OF SITE STRUCTURES/AIR INJECTION WELLS/AIR EXTRACTION WELLS ARE OFFSET FROM MONITORING WELL LOCATIONS BY FIVE FEET. USE SITE STRUCTURES /AIR INJECTION WELLS/ AIR EXTRACTION WELLS AS REFERENCE POINTS.

0 30 60
GRAPHIC SCALE IN FEET

DRAWN BY DM	DATE 4/5/05	Tetra Tech NUS, Inc.	EXISTING CONDITIONS AND CROSS SECTION LOCATION MAP SITE 2 - FIRE TRAINING AREA NWIRP CALVERTON, NEW YORK
CHECKED BY	DATE		
REVISED BY	DATE		
SCALE AS NOTED			

CONTRACT NO. 1610
OWNER NO. 004
APPROVED BY DATE
DRAWING NO. FIGURE 2-2
REV. 0

DRAWING NO. FIGURE 2-2
REV. 0

FORM CADD NO. TTNUS-D-STD.SVG - REV 1 - 9/11/98

ACAD:1610CP14.dwg 06/02/05 DM PIT

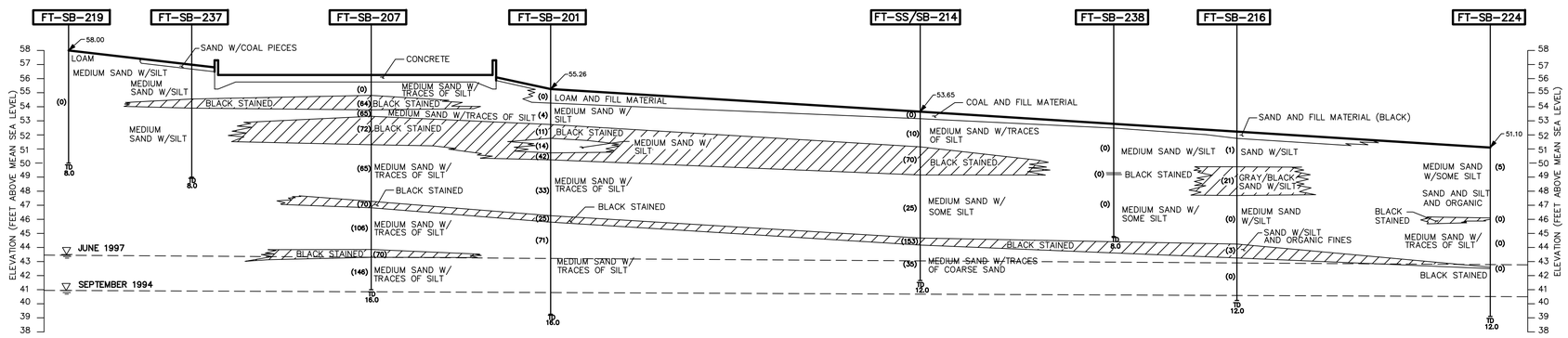

LEGEND:

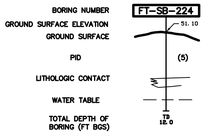

NOTES:

1. PHOTO IONIZATION DETECTOR (PID) READINGS (IN PARENTHESES) ARE THE MAXIMUM DETECTED WITHIN A GIVEN MATERIAL ENCOUNTERED.
2. WATER TABLE INFORMATION TAKEN FROM MEASUREMENTS AT FT-MW-02-S AND PROVIDED IN THE 1995 RCRA FACILITY INVESTIGATION (HALIBURTON) AND THE 2001 PHASE 2 REMEDIAL INVESTIGATION (TtNUS).

0 20 40
HORIZONTAL SCALE IN FEET

0 5 10
VERTICAL SCALE IN FEET

DRAWN BY DM DATE 5/26/05	Tetra Tech NUS, Inc.	CROSS SECTION A-A' SITE 2 - FIRE TRAINING CENTER NWIRP CALVERTON, NEW YORK	CONTRACT NO. 1610
CHECKED BY DATE			OWNER NO. 004
REVISED BY DATE			APPROVED BY DATE
SCALE AS NOTED			DRAWING NO. FIGURE 2-3 REV. 0

DRAWING NO. FIGURE 2-3 REV. 0

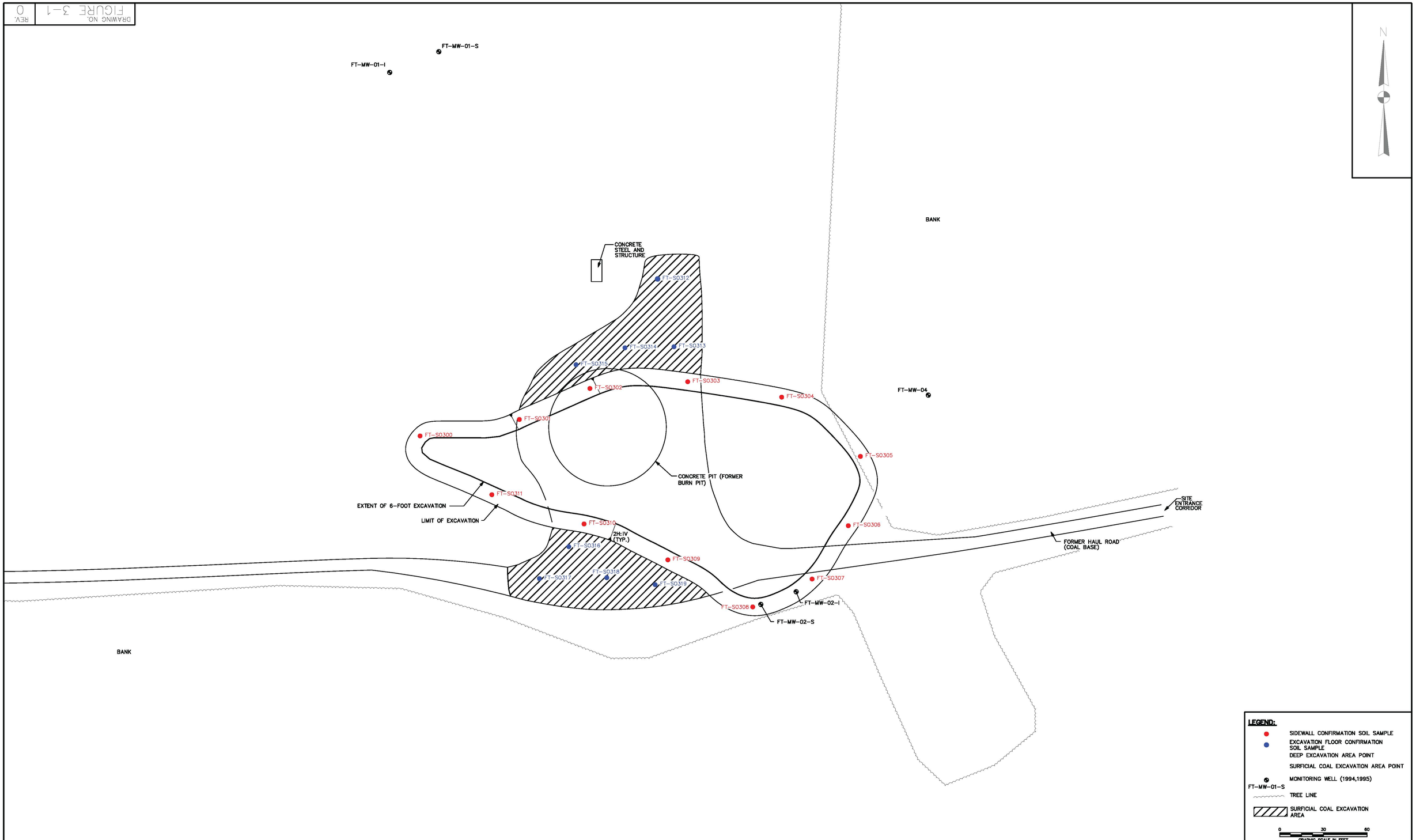

DRAWN BY BH	DATE 9/17/08	Tetra Tech NUS, Inc.	SOIL CONFIRMATION SAMPLE LOCATIONS SITE 2 – FIRE TRAINING AREA NWIRP CALVERTON, NEW YORK
CHECKED BY	DATE		
REVISED BY	DATE		
SCALE AS NOTED			

CONTRACT NO. 1686	
OWNER NO. 162	
APPROVED BY	DATE
DRAWING NO. FIGURE 3–1	REV. 0

DRAWING NO. FIGURE 3–1 REV. 0

Appendix A

TABLE OF CONTENTS

SECTION **PAGE**

1.0 PURPOSE **2**

2.0 SCOPE **2**

3.0 GLOSSARY **2**

4.0 RESPONSIBILITIES AND PERSONNEL QUALIFICATIONS **3**

5.0 HEALTH AND SAFETY **4**

6.0 PROCEDURES **5**

6.1 Overview 6
6.2 Soil Sample Collection 6
6.2.1 Procedure for Preserving and Collecting Soil Samples for Volatile Organic Compound Analysis 6
6.2.2 Procedure for Collecting Soil Samples for Non-Volatile Analyses 9
6.2.3 Procedure for Collecting Undisturbed Soil Samples 10
6.3 Surface Soil Sampling 13
6.4 Near-Surface Soil Sampling 14
6.5 Subsurface Soil Sampling With a Hand Auger 15
6.6 Subsurface Soil Sampling with a Split-Barrel Sampler 17
6.7 Subsurface Soil Sampling Using Direct-Push Technology 18
6.8 Excavation and Sampling of Test Pits and Trenches 18
6.8.1 Applicability 18
6.8.2 Test Pit and Trench Excavation 19
6.8.3 Sampling in Test Pits and Trenches 21
6.8.4 Backfilling of Trenches and Test Pits 25
6.9 Records 25

7.0 REFERENCES **26**

ATTACHMENTS

A SOIL & SEDIMENT SAMPLE LOG SHEET **28**
B SPLIT-SPOON SAMPLER **29**
C TEST PIT LOG **30**
D REMOTE SAMPLE HOLDER FOR TEST PIT/TRENCH SAMPLING **31**

1.0 PURPOSE

This Standard Operating Procedure (SOP) describes the procedures to be used to collect surface, near-surface, and subsurface soil samples. Additionally, it describes the methods for sampling of test pits and trenches to determine subsurface soil and rock conditions and for recovery of small-volume or bulk samples from pits.

2.0 SCOPE

This document applies to the collection of surface, near-surface, and subsurface soil samples exposed through hand digging, hand augering, drilling, or machine excavating at hazardous substance sites for laboratory testing, onsite visual examination, and onsite testing.

3.0 GLOSSARY

Composite Sample - A composite sample is a combination of more than one grab sample from various locations and/or depths and times that is homogenized and treated as one sample. This type of sample is usually collected when determination of an average waste concentration for a specific area is required. Composite samples shall not be collected for volatile organics analysis.

Confined Space - As stipulated in 29 Code of Federal Regulations (CFR) 1910.146, a confined space means a space that: (1) is large enough and so configured that an employee can bodily enter and perform assigned work; (2) has limited or restricted means for entry or exit (e.g., tanks, vessels, silos, storage bins, hoppers, vaults, pits, and excavations); and (3) is not designed for continuous employee occupancy. TtNUS considers all confined space as permit-required confined spaces.

Grab Sample - One sample collected at one location and at one specific time.

Hand Auger - A sampling device used to extract soil from the ground.

Representativeness – A qualitative description of the degree to which an individual sample accurately reflects population characteristics or parameter variations at a sampling point. It is therefore an important characteristic not only of assessment and quantification of environmental threats posed by the site, but also for providing information for engineering design and construction. Proper sample location selection and proper sample collection methods are important to ensure that a truly representative sample has been collected.

Sample for Non-Volatile Analyses - Includes all chemical parameters other than volatile organics (e.g., semivolatiles, pesticides/PCBs, metals, etc.) and those engineering parameters that do not require undisturbed soil for their analysis.

Split-Barrel Sampler - A steel tube, split in half lengthwise, with the halves held together by threaded collars at either end of the tube. Also called a split-spoon sampler, this device can be driven into resistant materials using a drive weight mounted in the drilling string. A standard split-barrel sampler is typically available in two common lengths, providing either 20-inch or 26-inch longitudinal clearance for obtaining 18-inch or 24-inch-long samples, respectively. These split-barrel samplers commonly range in size from 2 to 3.5 inches OD. The larger sizes are commonly used when a larger volume of sample material is required (see Attachment B).

Test Pit and Trench - Open, shallow excavations, typically rectangular (if a test pit) or longitudinal (if a trench), excavated to determine shallow subsurface conditions for engineering, geological, and soil chemistry exploration and/or sampling purposes. These pits are excavated manually or by machine (e.g., backhoe, clamshell, trencher, excavator, or bulldozer).

Thin-Walled Tube Sampler - A thin-walled metal tube (also called a Shelby tube) used to recover relatively undisturbed soil samples. These tubes are available in various sizes, ranging from 2 to 5 inches outside diameter (OD) and from 18 to 54 inches in length.

4.0 RESPONSIBILITIES AND PERSONNEL QUALIFICATIONS

Project Manager - The Project Manager is responsible for determining the sampling objectives, selecting proposed sampling locations, and selecting field procedures used in the collection of soil samples. Additionally, in consultation with other project personnel (geologist, hydrogeologist, etc.), the Project Manager establishes the need for test pits or trenches and determines their approximate locations and dimensions.

Site Safety Officer (SSO) - The SSO (or a qualified designee) is responsible for providing the technical support necessary to implement the project Health and Safety Plan. This will include (but not be limited to) performing air quality monitoring during sampling, boring, and excavation activities and to ensure that workers and offsite (downwind) individuals are not exposed to hazardous levels of airborne contaminants. The SSO/designee may also be required to advise the FOL on other safety-related matters regarding boring, excavation, and sampling, such as mitigative measures to address potential hazards from unstable trench walls, puncturing of drums or other hazardous objects, etc.

Field Operations Leader (FOL) - This individual is primarily responsible for the execution of the planning document containing the Sampling and Analysis Plan (SAP). This is accomplished through management of a field sampling team for the proper acquisition of samples. He or she is responsible for the supervision of onsite analyses; ensuring proper instrument calibration, care, and maintenance; sample collection and handling; the completion and accuracy of all field documentation; and making sure that custody of all samples obtained is maintained according to proper procedures. When appropriate and as directed by the FOL, such responsibilities may be performed by other qualified personnel (e.g., field technicians) where credentials and time permit. The FOL is responsible for finalizing the locations for collection of surface, near-surface, and subsurface (hand and machine borings, test pits/trenches) soil samples. He/she is ultimately responsible for the sampling and backfilling of boreholes, test pits, and trenches and for adherence to Occupational Safety and Health Administration (OSHA) regulations during these operations through self acquisition or through the management of a field team of samplers.

Project Geologist/Sampler - The project geologist/sampler is responsible for the proper acquisition of samples in accordance with this SOP and/or other project-specific documents. In addition, this individual is responsible for the completion of all required paperwork (e.g., sample log sheets, field notebook, boring logs, test pit logs, container labels, custody seals, and chain-of-custody forms) associated with the collection of those samples.

Competent Person - A Competent Person, as defined in 29 CFR 1929.650 of Subpart P - Excavations, means one who is capable of identifying existing and predictable hazards in the surroundings, or working conditions that are unsanitary, hazardous, or dangerous to employees, and who has authorization to take prompt corrective measures to eliminate them.

General personnel qualifications for groundwater sample collection and onsite water quality testing include the following:

- Occupational Safety and Health Administration (OSHA) 40-hour and applicable refresher training.
- Capability of performing field work under the expected physical and environmental (i.e., weather) conditions.

- Familiarity with appropriate procedures for sample documentation, handling, packaging, and shipping.

5.0 HEALTH AND SAFETY

Health and safety precautions are identified for individual sample collection procedures throughout this SOP. In addition to those precautions, the following general hazards may be incurred during sampling activities:

- Knee injuries from kneeling on hard or uneven surfaces
- Slips, trips, and falls
- Cuts and lacerations
- Traffic hazards associated with sampling in parking areas, along roadways and highways.

Methods of avoiding these hazards are provided below.

Knee injuries – If kneeling is required during soil sampling, this could result in knee injuries from stones/foreign objects and general damage due to stress on the joints. To minimize this hazard:

- Clear any foreign objects from the work area.
- Wear hard-sided knee pads.
- Stretch ligaments, tendons and muscles before, during and after. Take breaks as frequently as necessary.
- Report pre-existing conditions to the SSO if you feel this activity will aggravate an existing condition.

Slips, Trips, and Falls – These hazards exist while traversing varying terrains carrying equipment to sample locations. To minimize these hazards:

- Pre-survey sampling locations. Eliminate, barricade, or otherwise mark physical hazards leading to the locations.
- Carry small loads that do not restrict the field of vision.
- Travel the safest and clearest route (not necessarily the shortest).

Cuts and Lacerations - To prevent cuts and lacerations associated with soil sampling, the following provisions are required:

- Always cut away from yourself and others when cutting tubing or rope. This will prevent injury to yourself and others if the knife slips.
- Do not place items to be cut in your hand or on your knee.
- Change blades as necessary to maintain a sharp cutting edge. Many accidents result from struggling with dull cutting attachments.

- Whenever practical, wear cut-resistant gloves (e.g., leather or heavy cotton work gloves) at least on the hand not using the knife.
- Keep cutting surfaces clean and smooth.
- Secure items to be cut – do not hold them against the opposing hand, a leg, or other body part.
- When transporting glassware, keep it in a hard-sided container such as a cooler so that if there is a fall, you will be less likely to get cut by broken glass.
- DO NOT throw broken sample jars or glass ampoules into garbage bags. Place broken glass and glass ampoules in hard-sided containers such as a cardboard box or directly into a dumpster. DO NOT reach into garbage bags to retrieve any item accidentally thrown away. Empty the contents onto a flat surface to avoid punctures and lacerations from reaching where you cannot see.

Vehicular and Foot Traffic Hazards – When sampling along the roadway or near traffic patterns, follow the following precautions:

- Motorists may be distracted by onsite activities – ASSUME THEY DO NOT SEE YOU OR MEMBERS OF YOUR FIELD CREW.
- DO NOT place obstructions (such as vehicles) along the sides of the road that may cause site personnel to move into the flow of traffic to avoid your activities or equipment or that will create a blind spot.
- **Provide a required free space of travel**. Maintain at least 6 feet of space between you and moving traffic. Where this is not possible, use flaggers and/or signs to warn oncoming traffic of activities near or within the travel lanes.
- Face Traffic. Whenever feasible, if you must move within the 6 feet of the required free space or into traffic, attempt to face moving traffic at all times. Always leave yourself an escape route.
- Wear high-visibility vests to increase visual recognition by motorists.
- Do not rely on the vehicle operator's visibility, judgment, or ability. Make eye contact with the driver. Carefully and deliberately use hand signals so they will not startle or confuse motorists or be mistaken for a flagger's direction before moving into traffic.
- Your movements may startle a motorist and cause an accident, so move deliberately. Do not make sudden movements that might confuse a motorist.

6.0 PROCEDURES

The following procedures address surface and subsurface sampling.

CAUTION

Each situation must be evaluated individually to determine the applicability and necessity for obtaining a utility clearance ticket/dig permit. Common sense dictates, prior to digging or boring with power equipment, no matter what the depth, or digging by hand in a manner that could damage unprotected underground utilities, that a dig permit is required. See SOP HS-1.0, Utility Locating and Excavation Clearance, for additional

clarification. If you do not know or are unsure as to whether a ticket is necessary – **Get the Ticket**.

6.1 Overview

Soil sampling is an important adjunct to groundwater monitoring. Sampling of the soil horizons above the groundwater table can detect contaminants before they migrate to the water table, and can establish the amount of contamination absorbed or adsorbed on aquifer solids that have the potential of contributing to groundwater contamination.

Soil types can vary considerably on a hazardous waste site. These variations, along with vegetation, can affect the rate of contaminant migration through the soil. It is important, therefore, that a detailed record be maintained during sampling operations, particularly noting sampling locations, depths, and such characteristics as grain size, color, and odor. Subsurface conditions are often stable on a daily basis and may demonstrate only slight seasonal variation especially with respect to temperature, available oxygen and light penetration. Changes in any of these conditions can radically alter the rate of chemical reactions or the associated microbiological community, thus further altering specific site conditions. Certain vegetation species can create degradation products that can alter contaminant concentrations in soil. This is why vegetation types and extent of degradation of this foliage must be recorded. To prevent degradation, samples must be kept at their at-depth temperature or lower, protected from direct light, sealed tightly in approved glass containers, and be analyzed as soon as possible after collection. In addition, to the extent possible, vegetation should be removed from the sample.

The physical properties of the soil, its grain size, cohesiveness, associated moisture, and such factors as depth to bedrock and water table, will limit the depth from which samples can be collected and the method required to collect them. It is the intent of this document to present the most commonly employed soil sampling methods used at hazardous waste sites.

6.2 Soil Sample Collection

6.2.1 Procedure for Preserving and Collecting Soil Samples for Volatile Organic Compound Analysis

Samples collected using traditional methods such as collection in a jar with no preservation have been known to yield non-representative samples due to loss of volatile organic compounds (VOCs). To prevent such losses, preservation of samples with methanol or sodium bisulfate may be used to minimize volatilization and biodegradation. This preservation may be performed either in the field or laboratory, depending on the sampling methodology employed. Because of the large number of sampling methods and associated equipment required, careful coordination between field and laboratory personnel is needed.

Soil samples to be preserved by the laboratory are currently being collected using Method SW-846, 5035. For samples preserved in the field, laboratories are currently performing low-level analyses (sodium bisulfate preservation) and high- to medium-level analyses (methanol preservation) depending on the needs of the end user.

The following procedures outline the necessary steps for collecting soil samples to be preserved at the laboratory, and for collecting soil samples to be preserved in the field with methanol or sodium bisulfate.

6.2.1.1 Soil Samples to be Preserved at the Laboratory

Soil samples collected for volatile organic analysis that are to be preserved at the laboratory shall be obtained using a hermetically sealed sample vial such as an EnCore™ sampler. Each sample shall be obtained using a reusable sampling handle (T-handle) that can be provided with the EnCore™ sampler when requested and purchased. Collect the sample in the following manner for each EnCore™ sampler:

1. Scene Safety - Evaluate the area where sampling will occur. Ensure that the area is safe from physical, chemical, and natural hazards. Clear or barricade those hazards that have been identified.

2. Wear the appropriate personal protective equipment (PPE). This will include, at a minimum, safety glasses and nitrile surgeon's gloves. If you must kneel on the ground or place equipment on the surface being sampled, cover the ground surface with plastic to minimize surface contamination of your equipment and clothing. Wear knee pads to protect your knees from kneeling on hard or uneven surfaces.

3. Load the Encore™ sampler into the T-handle with the plunger fully depressed.

4. Expose the area to be sampled using a hand trowel or similar device to remove surface debris.

5. Press the T-handle against the freshly exposed soil surface, forcing soil into the sampler. The plunger will be forced upward as the cavity fills with soil.

6. When the sampler is full, rotate the plunger and lock it into place. If the plunger does not lock, the sampler is not full. This method ensures there is no headspace. Soft soil may require several plunges or forcing soil against a hard surface such as a sample trowel to ensure that headspace is eliminated.

7. Use a paper towel to remove soil from the side of the sampler so a tight seal can be made between the sample cap and the rubber O-ring.

8. With soil slightly piled above the rim of the sampler, force the cap on until the catches hook the side of the sampler.

9. Remove any surface soil from the outside of the sampler and place in the foil bag provided with the sampler. Good work hygiene practices and diligent decontamination procedures prevents the spread of contamination even on the outside of the containers.

10. Label the bag with appropriate information in accordance with SOP SA-6.3.

11. Place the full sampler inside a lined cooler with ice and cool to 4˚C ± 2 ˚C. Make sure any required trip blanks and temperature blanks are also in the cooler. Secure custody of the cooler in accordance with SOP SA-6.3.

12. Typically, collect three Encore™ samplers at each location. Consult the SAP or laboratory to determine the required number of Encore™ samplers to be collected.

13. The T-handle shall be decontaminated before moving to the next interval or location using a soap and water wash and rinse, and where applicable, the selected solvent as defined in the project planning documents.

Using this type of sampling device eliminates the need for field preservation and the shipping restrictions associated with preservatives. A complete set of instructions is included with each Encore™ sampler.

After the Encore™samples are collected, they should be placed on ice immediately and delivered to the laboratory within 48 hours (following the chain-of-custody and documentation procedures outlined in SOP SA-6.1). Samples must be preserved by the laboratory within 48 hours of sample collection.

6.2.1.2 Soil Samples to be Preserved in the Field

Soil samples preserved in the field may be prepared for analyses using both the low-level (sodium bisulfate preservation) and high- to medium-level (methanol preservation) methods.

Safety Reminder

When using chemicals in the field to preserve samples, the FOL and/or SSO must ensure that Materials Safety Data Sheets (MSDSs) have been provided with the chemicals to be used. They also must ensure that these chemicals have been added to the Chemical Inventory List contained within Section 5.0, Hazard Communication, of your Health and Safety Guidance Manual (HSGM). Lastly, but most importantly, the FOL and/or SSO must review the hazards with personnel using these chemicals and ensure that provisions are available for recommended PPE and emergency measures (e.g., eyewash, etc.).

Methanol Preservation (High to Medium Level):

Bottles may be pre-spiked with methanol in the laboratory or prepared in the field. Soil samples to be preserved in the field with methanol shall utilize 40 to 60 mL glass vials with septum-lined lids. Each sample bottle shall be filled with 25 mL of demonstrated analyte-free purge-and-trap grade methanol. The preferred method for adding methanol to the sample bottle is by removing the lid and using a pipette or scaled syringe to add the methanol directly to the bottle.

CAUTION

NEVER attempt to pipette by mouth

In situations where personnel are required to spike the septum using a hypodermic needle, the following provisions for handling sharps must be in place:

- Training of personnel regarding methods for handling of sharps
- Hard-sided containers for the disposal of sharps
- Provisions for treatment in cases where persons have received a puncture wound

Soil shall be collected with the use of a decontaminated (or disposable), small-diameter coring device such as a disposable tube/plunger-type syringe with the tip cut off. The outside diameter of the coring device must be smaller than the inside diameter of the sample bottle neck.

A small electronic balance or manual scale will be necessary for measuring the volume of soil to be added to the methanol-preserved sample bottle. Calibration of the scale shall be performed prior to use and intermittently throughout the day according to the manufacturer's requirements.

The sample should be collected as follows:

1. Weigh the unused syringe and plunger to the nearest 0.01 gram.

2. Pull the plunger back and insert the syringe into the soil to be sampled.

3. Collect 8 to 12 grams of soil by pushing the syringe barrel into the soil.

4. Weigh the sample and adjust until obtaining the required amount of sample.

5. Record the sample weight to the nearest 0.01 gram in the field logbook and/or on the sample log sheet.

6. Extrude the weighed soil sample into the methanol-preserved sample bottle taking care not to contact the sample container with the syringe.

7. If dirty, wipe soil particles from the threads of the bottle and cap. Cap the bottle tightly.

8. After capping the bottle, swirl the sample (do not shake) in the methanol and break up the soil such that all of the soil is covered with methanol.

9. Place the sample on ice immediately and prepare for shipment to the laboratory as described in SOP SA-6.1.

Sodium Bisulfate Preservation (Low Level):

CAUTION
Care should be taken when adding the soil to the sodium bisulfate solution. A chemical reaction of soil containing carbonates (limestone) may cause the sample to effervesce or the vial to possibly explode. To avoid this hazard or hazards of this type, a small sample aliquot should be subjected to the sample preservative. If it effervesces in an open air environment, utilize an alternative method such as Encore™ or 2-ounce jar.

Bottles may be prepared in the laboratory or in the field with sodium bisulfate solution. Samples to be preserved in the field using the sodium bisulfate method are to be prepared and collected as follows:

1. Add 1 gram of sodium bisulfate to 5 mL of laboratory-grade deionized water in a 40 to 60 mL glass vial with septum-lined lid.

2. Collect the soil sample and record the sample weight to the nearest 0.01 gram in the field logbook or on the sample log sheet as described for methanol preservation

3. Add the weighed sample to the sample vial.

4. Collect duplicate samples using the methanol preservation method on a one-for-one sample basis because it is necessary for the laboratory to perform both low-level and medium-level analyses.

5. Place the samples on ice immediately and prepare for shipment to the laboratory as described in SOP SA-6.1.

NOTE
If lower detection limits are necessary, an option to field preserving with sodium bisulfate may be to collect EnCore™ samplers at a given sample location. Consult the planning documents to determine whether this is required. If it is, collect samples in accordance with the Encore™ sampling procedure above and then send all samplers to the laboratory to perform the required preservation and analyses.

6.2.2 Procedure for Collecting Soil Samples for Non-Volatile Analyses

Samples collected for non-volatile analyses may be collected as either grab or composite samples as follows:

1. With a stainless steel trowel or other approved tool, transfer a portion of soil to be sampled to a stainless steel bowl or disposable inert plastic tray.

2. Remove roots, vegetation, sticks, and stones larger than the size of a green pea.

3. Thoroughly mix the soil in the bowl or tray to obtain as uniform a texture and color as practicable. The soil type, moisture content, amount of vegetation, and other factors may affect the amount of time required to obtain a properly mixed sample. In some cases, it may be impossible to obtain a uniform sample appearance. Use the field logbook to describe any significant difficulties encountered in obtaining a uniform mixture.

4. Transfer the mixed soil to the appropriate sample containers and close the containers.

5. Label the sample containers in accordance with SOP SA-6.3.

6. Place the containers in a cooler of ice as soon after collection as possible.

7. Prepare the sample shipment and ship the samples in accordance with SOP SA-6.1.

> ***NOTE***
> Cooling may not be required for some samples depending on the scheduled analyses. Consult the planning documents if in doubt regarding correct sample preservation conditions. When in doubt – Cool to 4˚C.

> ***NOTE***
> Head space is permitted in soil sample containers for non-volatile analyses to allow for sample expansion.

6.2.3 Procedure for Collecting Undisturbed Soil Samples

> ***NOTE***
> Use of thin-walled undisturbed tube samplers is restricted by the consistency of the soil to be sampled. Often, very loose and/or wet samples cannot be retrieved by the samplers, and soil with a consistency in excess of very stiff cannot be penetrated by the sampler. Devices such as Dennison or Pitcher core samplers can be used to obtain undisturbed samples of stiff soil. Using these devices normally increases sampling costs, and therefore their use should be weighed against the need for acquiring an undisturbed sample. These devices are not discussed in this SOP because they are not commonly used.

When it is necessary to acquire undisturbed samples of soil for purposes of engineering parameter analysis (e.g., permeability), a thin-walled, seamless tube sampler (Shelby tube) shall be employed using the following collection procedure:

1. In preparation for sampling utilizing a drill rig, field personnel must complete the following activities:

- Ensure that all subsurface drilling activities are preceded by a utility clearance for the area to be investigated. This includes activities described in SOP HS-1.0, Utility Location and Excavation Clearance, as well as any location-specific procedures that may apply.

> ***REMEMBER***
> If you are digging near a marked utility (within the diameter of an underground utility that has been marked plus 18 inches), you must first locate the utility through vacuum extraction or hand digging to ensure that your activities will not damage the utility.

- Complete an Equipment Inspection Checklist for the drill rig or direct-push technology (DPT) rig. This checklist will be provided in the HASP.
- Review the Safe Work Permit prior to conducting the activity.
- Review the activity to be conducted.

2. Remove all surface debris (e.g., vegetation, roots, twigs, etc.) from the specific sampling location and drill and/or clean out the borehole to the desired sampling depth. Be careful to minimize potential disturbance of the material to be sampled. In saturated material, withdraw the drill bit slowly to prevent loosening of the soil around the borehole and to maintain the water level in the hole at or above groundwater level.

> ***CAUTION***
> The use of bottom-discharge bits or jetting through an open-tube sampler to clean out the borehole shall not be allowed. Only the use of side-discharge bits is permitted.

3. Determine whether a stationary piston-type sampler is required to limit sample disturbance and aid in retaining the sample. Either the hydraulically operated or control rod activated-type of stationary piston sampler may be used.

4. Prior to inserting the tube sampler into the borehole, check to ensure that the sampler head contains a check valve. The check valve is necessary to keep water in the rods from pushing the sample out the tube sampler during sample withdrawal. In addition, the check valve maintains a positive suction within the tube to help retain the sample.

5. A stainless steel tube sampler is typically used to minimize chemical reaction between the sample and the sampling tube.

6. With the sampling tube resting on the bottom of the hole and the water level in the boring at groundwater level or above, push the tube into the soil with a continuous and rapid motion, without impacting or twisting. If the soil is too hard to penetrate by pushing alone, careful hammering may be used by minimizing drop distance (tapping) of the hammer. Before pulling the tube, turn it at least one revolution to shear the sample off at the bottom. In no case shall the tube be pushed farther than the length provided for the soil sample. Allow about 3 inches in the tube for cuttings and sludge.

7. Upon removal of the sampling tube from the hole, measure the length of sample in the tube and also the length penetrated.

8. Remove disturbed material in the upper end of the tube and measure the length of sample again.

9. After removing at least 1 inch of soil from the lower end, place enough packing material (clean inert material such as paper or cloth) tightly in each end of the Shelby tube and then pour melted wax into each end to make at least a ½-inch wax plug and then add more packing material to fill the voids at both ends.

10. Place plastic caps on the ends, tape the caps in place, and dip the ends in wax to prevent loss of soil.

11. Affix label(s) to the tube as required and record sample number, depth, penetration, and recovery length on the label.

12. Mark the "up" direction on the side and upper end of the tube with indelible ink.

13. Complete a chain-of-custody form (see SOP SA-6.3) and other required forms (including Attachment A of this SOP).

14. Ship samples protected with suitable resilient packing material to reduce shock, vibration, and disturbance.

CAUTION

To preserve sample integrity do not allow tubes to freeze, and store the samples vertically with the same orientation they had in the ground, (i.e., top of sample is up) in a cool place out of the sun at all times.

CAUTION

A primary concern in the preparation of the wax plugs is the potential for the heat source and melted wax to cause a fire and/or burns. Follow the directions below to prevent injury or fire.

Electrical Heating

Using hot plates to melt the wax is acceptable. In an outdoor setting, make sure a Ground Fault Circuit Interrupter (GFCI) is employed within the electrical circuit. If a portable generator is used, ensure that the generator is an adequate distance from the sampling operation (at least 50 feet). Ensure that the extension cord is rated for the intended load and for outdoor use and is free from recognizable damage. Ensure flammable preservatives are not employed or stored near the hot plate. Although a Hot Work Permit is not required, scene safety evaluation by site personnel of the above elements is. As always, if a fire potential exists, the provisions for extinguishing must be immediately accessible as well as any provisions for first aid measures.

Open Flame

If an open flame is used, the following provisions are necessary:

- Complete a Hot Work Permit and any local permit required for elevated temperature applications. The Hot Work Permit, provided in your HASP, will aid the FOL and/or the SSO in ensuring that fire protection provisions (extinguishers, fire watches, etc.) are in place as well as ensuring that local requirements have been addressed.

- Ensure that water is available to address any wax splashes or contact. If possible, immerse the contacted area. Where this is not possible, run water over the area and apply cold compresses. The need for medical attention or first aid shall be determined on site under the direction of the SSO.

6.3 Surface Soil Sampling

The simplest, most direct method of collecting surface soil samples for subsequent analysis is by use of a stainless steel shovel, hand auger, soil corer, or stainless steel or disposable plastic trowel.

NOTE

Multiple depth intervals are used to describe surface soil. Sometimes surface soil is defined as soil from 0 to 2 inches below ground surface (bgs), and sometimes it is defined as soil from other depths such as 0 to 2 feet bgs. Ensure that the definition of surface soil depth is clear before collecting surface soil samples.

For the purposes of instruction, the terms “surface soil” and “near-surface soil” are used in this SOP as follows:

- Surface soil - 0 to 6 inches bgs
- Near-surface soil - 6 to 18 inches bgs

If these intervals are defined differently in the planning documents, substitute the appropriate depth ranges.

In general, the following equipment is necessary for obtaining surface soil samples:

- Stainless steel or pre-cleaned disposable trowel.
- Stainless steel hand auger, soil corer, or shovel.
- Real-time air monitoring instrument (e.g., PID, FID) as directed in project planning document.
- Required PPE.
  - Nitrile surgeon’s or latex gloves may be used, layered as necessary.
  - Safety glasses
  - Other – Items identified on the Safe Work Permit may be required based on location-specific requirements such as hearing protection, steel-toed work boots, and a hard hat when working near a drill rig. These provisions will be listed in the HASP or directed by the FOL and/or SSO.

Safety Reminder

The use of latex products may elicit an allergic reaction in some people. Should this occur, remove the latex gloves, treat for an allergic reaction, and seek medical attention as necessary.

- Required paperwork (see SOP SA-6.3 and Attachment A of this SOP)

- Required decontamination equipment
- Required sample container(s)
- Wooden stakes or pin flags
- Sealable polyethylene bags (e.g., Ziploc® baggies)
- Heavy duty cooler
- Ice
- Chain-of-custody records and custody seals

When acquiring surface soil samples, use the following procedure:

1. Place padding or use knee pads when kneeling near the sample location. If necessary, place plastic sheeting to provide a clean surface for sample equipment to avoid possible cross- contamination.
2. Carefully remove vegetation, roots, twigs, litter, etc. to expose an adequate soil surface area to accommodate sample volume requirements.
3. Using a precleaned syringe or EnCore™ samplers, follow the procedure in Section 6.2.1 for collecting surface soil samples for volatile analysis. Surface soil samples for volatile organic analysis should be collected deeper than 6 inches bgs because shallower material has usually lost most of the volatiles through evaporation. Ensure that the appropriate surface soil depth is being analyzed in accordance with the planning document.
4. Using decontaminated sampling tools, thoroughly mix in place a sufficient amount of soil to fill the remaining sample containers. See Section 6.5 of this procedure for hand auger instruction, as needed.
5. Transfer the sample into those containers utilizing a stainless steel trowel.
6. Cap and securely tighten all sample containers.
7. Affix a sample label to each container. Be sure to fill out each label carefully and clearly, addressing all the categories described in SOP SA-6.3.
8. Proceed with the handling and processing of each sample container as described in SOP SA-6.2.
9. Site restoration – Whenever removing sample materials, always restore the surface. It is our intent to leave the area better than we found it. Do NOT create trip hazards in areas when pedestrian traffic may exist.

6.4 Near-Surface Soil Sampling

Collection of samples from near the surface (depth of 6 to 18 inches) can be accomplished with tools such as shovels, hand auger, soil corers, and stainless steel or pre-cleaned disposable trowels and the equipment listed under Section 6.5 of this procedure.

To obtain near-surface soil samples, the following protocol shall be used:

1. With a clean shovel, make a series of vertical cuts in the soil to the depth required to form a square approximately 1 foot by 1 foot.

2. Lever out the formed plug and scrape the bottom of the freshly dug hole with a decontaminated stainless steel or pre-cleaned disposable trowel to remove any loose soil.

3. Follow steps 1 through 9 of Section 6.3.

6.5 Subsurface Soil Sampling With a Hand Auger

A hand augering system generally consists of a variety of stainless steel bucket bits (approximately 6.5 inches long and 2, 2.75, 3.25, and 4 inches in diameter), series of extension rods (available in 2-, 3-, 4- and 5-inch lengths), and a T-handle connected to extension rods and to the auger bucket. A larger-diameter bucket bit is commonly used to bore a hole to the desired sampling depth and then it is withdrawn. The larger-diameter bit is then replaced with a smaller-diameter bit, lowered down the hole, and slowly turned into the soil to the completion depth (approximately 6 inches). The apparatus is then withdrawn and the soil sample collected.

The hand auger can be used in a wide variety of soil conditions. It can be used to sample soil either from the surface, or to depths in excess of 12 feet. However, the presence of subsurface rocks and landfill material and collapse of the borehole normally limit sampling depth.

To accomplish soil sampling using a hand augering system, the following equipment is required:

- Complete hand auger assembly (variety of bucket bit sizes)
- Stainless steel mixing bowls
- The equipment listed in Section 6.3
- Miscellaneous hand tools as required to assemble and disassemble the hand auger units

CAUTION

Potential hazards associated with hand augering include:

- Muscle strain and sprain due to over twisting and/or over compromising yourself.
- Equipment failure due to excessive stress on the T-handle or rods through twisting. Failure of any of these components will result in a sudden release and potential injury due to that failure.

As in all situations, any intrusive activities that could damage underground utilities shall be proceeded by a Dig/Excavation permit/ticket. Call the Utility Locating service in the area or your Project Health and Safety Officer for more information. When in doubt – **Get the Ticket!**

To obtain soil samples using a hand auger, use the following procedure:

1. Wearing designated PPE, attach a properly decontaminated bucket bit to a clean extension rod and attach the T-handle to the extension rod.

2. Clear the area to be sampled of any surface debris (vegetation, twigs, rocks, litter, etc.).

3. Twist the bucket into the ground while pushing vertically downward on the auger. The cutting shoes fill the bucket as it is advanced into the ground.

4. As the auger bucket fills with soil, periodically remove any unneeded soil.

5. Add rod extensions as necessary to extend the reach of the auger. Also, note (in a field notebook, boring log, and/or on a standardized data sheet) any changes in the color, texture or odor of the soil as a function of depth. The project-specific planning document (SAP, HASP, etc.) describe requirements for scanning the soil with a real-time air monitoring instrument (e.g., PID, FID, etc.) and recording the measurements.

6. After reaching the desired depth (e.g., the top of the interval to be sampled), slowly and carefully withdraw the apparatus from the borehole to prevent or minimize movement of soil from shallower intervals to the bottom of the hole.

7. Remove the soiled bucket bit from the rod extension and replace it with another properly decontaminated bucket bit. The bucket bit used for sampling is to be smaller in diameter than the bucket bit employed to initiate the borehole.

8. Carefully lower the apparatus down the borehole. Care must be taken to avoid scraping the borehole sides.

9. Slowly turn the apparatus until the bucket bit is advanced approximately 6 inches.

10. Discard the top of the core (approximately 1 inch), which represents any loose material collected by the bucket bit before penetrating the sample material.

11. Using a precleaned syringe or EnCore™ samplers, follow the procedure in Section 6.2.1 for collecting a soil sample for volatile compound analysis directly from the bucket bit.
12. Utilizing a properly decontaminated stainless steel trowel or dedicated disposable trowel, remove the remaining sample material from the bucket bit and place into a properly decontaminated stainless steel mixing bowl.

13. Homogenize the sample material as thoroughly as practicable then fill the remaining sample containers. Refer to Section 6.2.2.

14. Follow steps 4 through 7 listed in Section 6.3.

6.5.1 Sampling Using Stainless Steel Soil Corers

A soil corer is a stainless steel tube equipped with a cutting shoe and sample window in the side. The soil corer is advanced into the soil by applying downward pressure (body weight). The soil is unloaded by then forcing a ram towards the cutting shoe, which results in the discharge of the soil core through a window in the sleeve.

Use, application, and sample protocol is the same as for hand augering provided above, but without necessarily rotating the corer while advancing it.

SAFETY REMINDER

Hand augering and soil corer sampling can be physically demanding based on the type of geology and subsurface encumbrances encountered. Soil coring has some added

hazards such the corer collapsing under your weight. To reduce the potential for muscle strain and damage, the following measures will be incorporated:

- Stretch and limber your muscles before heavy exertion. This hazard becomes more predominant in the early morning hours (prior to muscles becoming limber) and later in the day (as a result of fatigue).
- Job rotation – Share the duties so that repetitive actions do not result in fatigue and injury.
- Increase break frequencies as needed, especially as ambient conditions of heat and/or cold stress may dictate.
- Do not force the hand tools or use cheater pipes or similar devices to bypass an obstruction. Move to another location near the sampling point. Exerting additional forces on the sampling devices can result in damage and/or failure that could potentially injure someone in the immediate vicinity.
- Do not over compromise yourself when applying force to the soil corer or hand auger. If there is a sudden release, it could result in a fall or muscle injury due to strain.

6.6 Subsurface Soil Sampling with a Split-Barrel Sampler

A split-barrel (split-spoon) sampler consists of a heavy carbon steel or stainless steel sampling tube that can be split into two equal halves to reveal the soil sample (see Attachment B). A drive head is attached to the upper end of the tube and serves as a point of attachment for the drill rod. A removable tapered nosepiece/drive shoe attaches to the lower end of the tube and facilitates cutting. A basket-like sample retainer can be fitted to the lower end of the split tube to hold loose, dry soil samples in the tube when the sampler is removed from the drill hole. This split-barrel sampler is made to be attached to a drill rod and forced into the ground by means of a 140-pound or larger casing driver.

Safety Reminder

It is intended through the Equipment Inspection for Drill Rigs form provided in the HASP that the hammer and hemp rope, where applicable, associated with this activity will be inspected (no physical damage is obvious), properly attached to the hammer (suitable knots or sufficient mechanical devices), and is in overall good condition.

Split-barrel samplers are used to collect soil samples from a wide variety of soil types and from depths greater than those attainable with other soil sampling equipment.

The following equipment is used for obtaining split-barrel samples:

- Drilling equipment (provided by subcontractor).
- Split-barrel samplers (2-inch OD, 1-3/8-inch ID, either 20 inches or 26 inches long); Larger OD samplers are available if a larger volume of sample is needed.
- Drive weight assembly, 140-pound weight, driving head, and guide permitting free fall of 30 inches.
- Stainless steel mixing bowls.

- Equipment listed in Section 6.3.

The following steps shall be followed to obtain split-barrel samples (Steps 1 through 4 are typically performed by the drilling subcontractor):

1. Attach the split-barrel sampler to the sampling rods.

2. Lower the sampler into the borehole inside the hollow stem auger bits.

3. Advance the split-barrel sampler by hammering the length (typically 18 or 24 inches) of the split-barrel sampler into the soil using 140-pound or larger hammer.

4. When the desired depth is achieved, extract the drill rods and sampler from the augers and/or borehole.

5. Detach the sampler from the drill rods.

6. Place the sampler securely in a vise so it can be opened using pipe wrenches.

> ***CAUTION***
> Pipe wrenches are used to separate the split spoon into several components. The driller's helper should not apply excessive force through the use of cheater pipes or push or pull in the direction where, if the wrench slips, hands or fingers will be trapped against an immovable object.

7. Remove the drive head and nosepiece with the wrenches, and open the sampler to reveal the soil sample.

8. Immediately scan the sample core with a real-time air monitoring instrument (e.g., FID, PID, etc.) (as project-specific planning documents dictate). Carefully separate (or cut) the soil core, with a decontaminated stainless steel knife or trowel, at about 6-inch intervals while scanning the center of the core for elevated readings. Also scan stained soil, soil lenses, and anomalies (if present), and record readings.

9. If elevated vapor readings were observed, collect the sample scheduled for volatile analysis from the center of the core where elevated readings occurred. If no elevated readings where encountered, the sample material should be collected from the core's center (this area represents the least disturbed area with minimal atmospheric contact) (refer to Section 6.2.1).

10. Using the same trowel, remove remaining sample material from the split-barrel sampler (except for the small portion of disturbed soil usually found at the top of the core sample) and place the soil into a decontaminated stainless steel mixing bowl.

11. Homogenize the sample material as thoroughly as practicable then fill the remaining sample containers (refer to Section 6.2.2).

12. Follow steps 4 through 7 in Section 6.3.

6.7 Subsurface Soil Sampling Using Direct-Push Technology

Subsurface soil samples can be collected to depths of 40+ feet using DPT. DPT equipment,

responsibilities, and procedures are described in SOP SA-2.5.

6.8 Excavation and Sampling of Test Pits and Trenches

6.8.1 Applicability

This subsection presents routine test pit or trench excavation techniques and specialized techniques that are applicable under certain conditions.

CAUTION

During the excavation of trenches or pits at hazardous waste sites, several health and safety concerns arise from the method of excavation. No personnel shall enter any test pit or excavation over 4 feet deep except as a last resort, and then only under direct supervision of a Competent Person (as defined in 29 CFR 1929.650 of Subpart P - Excavations). Whenever possible, all required chemical and lithological samples should be collected using the excavator bucket or other remote sampling apparatus. If entrance is required, all test pits or excavations must be stabilized by bracing the pit sides using specifically designed wooden, steel, or aluminum support structures or through sloping and benching. Personnel entering the excavation may be exposed to toxic or explosive gases and oxygen-deficient environments; therefore, monitoring will be conducted by the Competent Person to determine if it is safe to enter. Any entry into a trench greater than 4 feet deep will constitute a Confined Space Entry and must be conducted in conformance with OSHA standard 29 CFR 1910.146. In all cases involving entry, substantial air monitoring, before entry, appropriate respiratory gear and protective clothing determination, and rescue provisions are mandatory. There must be at least three people present at the immediate site before entry by one of the field team members. This minimum number of people will increase based on the potential hazards or complexity of the work to be performed. The reader shall refer to OSHA regulations 29 CFR 1926.650, 29 CFR 1910.120, 29 CFR 1910.134, and 29 CFR 1910.146. High-hazard entries such as this will be supported by members of the Health Sciences Group professionally trained in these activities.

Excavations are generally not practical where a depth of more than about 15 to 20-feet is desired, and they are usually limited to a few feet below the water table. In some cases, a pumping system may be required to control water levels within the pit, providing that pumped water can be adequately stored or disposed. If soil data at depths greater than 15-feet are required, the data are usually obtained through test borings instead of test pits.

In addition, hazardous wastes may be brought to the surface by excavation equipment. This material, whether removed from the site or returned to the subsurface, must be properly handled according to any and all applicable federal, state, and local regulations.

6.8.2 Test Pit and Trench Excavation

Test pits or trench excavations are constructed with the intent that they will provide an open view of subsurface lithology and/or disposal conditions that a boring will not provide. These procedures describe the methods for excavating and logging test pits and trenches installed to determine subsurface soil and rock conditions. Test pit operations shall be logged and documented (see Attachment C).

Test pits and trenches may be excavated by hand or power equipment to permit detailed descriptions of the nature and contamination of the in-situ materials. The size of the excavation will depend primarily on the following:

- The purpose and extent of the exploration
- The space required for efficient excavation
- The chemicals of concern
- The economics and efficiency of available equipment

Test pits normally have a cross section that is 4 to 10 feet square; test trenches are usually 3 to 6 feet wide and may be extended for any length required to reveal conditions along a specific line. The following table provides guidelines for design consideration based on equipment efficiencies.

Equipment	Typical Widths, in Feet
Trenching machine	0.25 to 1.0
Backhoe/Track Hoe	2 to 6

The lateral limits of excavation of trenches and the position of test pits shall be carefully marked on area base maps. If precise positioning is required to indicate the location of highly hazardous materials, nearby utilities, or dangerous conditions, the limits of the excavation shall be surveyed. Also, if precise determination of the depth of buried materials is needed for design or environmental assessment purposes, the elevation of the ground surface at the test pit or trench location shall also be determined by survey. If the test pit/trench will not be surveyed immediately, it shall be backfilled and its position identified with stakes placed in the ground at the margin of the excavation for later surveying.

The construction of test pits and trenches shall be planned and designed in advance as much as possible. However, the following field conditions may necessitate revisions to the initial plans:

- Subsurface utilities
- Surface and subsurface encumbrances
- Vehicle and pedestrian traffic patterns
- Purpose for excavation (e.g., the excavation of potential ordnance items)

The final depth and construction method shall be collectively determined by the FOL and designated Competent Person. The actual layout of each test pit, temporary staging area, and spoils pile may further be predicated based on site conditions and wind direction at the time the test pit is excavated. Prior to excavation, the area may be surveyed by magnetometer or metal detector or other passive methods specified in SOP HS1.0, Utility Location and Excavation Clearance, to identify the presence of underground utilities or drums. Where possible, the excavator should be positioned upwind and preferably within an enclosed cab.

No personnel shall enter any test pit or excavation except as a last resort, and then only under direct supervision of a Competent Person. If entrance is required, OSHA requirements must be met (e.g., walls must be braced with wooden or steel braces, ladders must be placed for every 25 feet of lateral travel and extended 3 feet above ground surface). A temporary guard rail or vehicle stop must be placed along the surface of the hole before entry in situations where the excavation may be approached by traffic. Spoils will be stockpiled no closer than 2 feet from the sidewall of the excavation. The excavation equipment operator shall be careful not to undercut sidewalls and will, where necessary, bench back to

increase stability. The top cover, when considered clean, will be placed separately from the subsurface materials to permit clean cover. It is emphasized that the project data needs should be structured such that required samples can be collected without requiring entrance into the excavation. For example, samples of leachate, groundwater, or sidewall soil can be collected with telescoping poles or similar equipment.

Dewatering and watering may be required to ensure the stability of the side walls, to prevent the bottom of the pit from heaving, and to keep the excavation stable. This is an important consideration for excavations in cohesionless material below the groundwater table and for excavations left open greater than a day. Liquids removed as a result of dewatering operations must be handled as potentially contaminated materials. Procedures for the collection and disposal of such materials should be discussed in the site-specific project plans.

Where possible excavations and test pits shall be opened and closed within the same working day. Where this is not possible, the following engineering controls shall be put in place to control access:

- Trench covers/street plates
- Fences encompassing the entire excavation intended to control access
- Warning signs warning personnel of the hazards
- Amber flashing lights to demarcate boundaries of the excavation at night

Excavations left open will have emergency means to exit should someone accidentally enter.

6.8.3 Sampling in Test Pits and Trenches

6.8.3.1 General

Log test pits and trenches as they are excavated in accordance with the Test Pit Log presented in Attachment C. These records include plan and profile sketches of the test pit/trench showing materials encountered, their depth and distribution in the pit/trench, and sample locations. These records also include safety and sample screening information.

Entry of test pits by personnel is extremely dangerous, shall be avoided unless absolutely necessary, and can occur only after all applicable health and safety and OSHA requirements have been met as stated above. These provisions will be reiterated as appropriate in the project-specific HASP.

The final depth and type of samples obtained from each test pit will be determined at the time the test pit is excavated. Sufficient samples are usually obtained and analyzed to quantify contaminant distribution as a function of depth for each test pit. Additional samples of each waste phase and any fluids encountered in each test pit may also be collected.

In some cases, samples of soil may be extracted from the test pit for reasons other than waste sampling and chemical analysis, for instance, to obtain geotechnical information. Such information includes soil types, stratigraphy, strength, etc., and could therefore entail the collection of disturbed (grab or bulk) or relatively undisturbed (hand-carved or pushed/driven) samples that can be tested for geotechnical properties. The purposes of such explorations are very similar to those of shallow exploratory or test borings, but often test pits offer a faster, more cost-effective method of sampling than installing borings.

6.8.3.2 Sampling Equipment

The following equipment is needed for obtaining samples for chemical or geotechnical analysis from test pits and trenches:

- Backhoe or other excavating machinery.
- Shovels, picks, hand augers, and stainless steel trowels/disposable trowels.
- Sample container - bucket with locking lid for large samples; appropriate bottle ware for chemical or geotechnical analysis samples.
- Polyethylene bags for enclosing sample containers; buckets.
- Remote sampler consisting of 10-foot sections of steel conduit (1-inch-diameter), hose clamps, and right angle adapter for conduit (see Attachment D).

6.8.3.3 Sampling Methods

The methods discussed in this section refer to test pit sampling from grade level. If test pit entry is required, see Section 6.8.3.4.

- Excavate the trench or pit in several 0.5- to 1.0-foot depth increments. Where soil types support the use of a sand bar cutting plate, use of this device is recommended to avoid potentially snagging utilities with the excavator teeth. It is recommended that soil probes or similar devices be employed where buried items or utilities may be encountered. This permits the trench floor to be probed prior to the next cut.
- After each increment:
  - the operator shall wait while the sampler inspects the test pit from grade level
  - the sampler shall probe the next interval where this is considered necessary. Practical depth increments for lithological evaluations may range from 2 to 4 feet i or where lithological changes are noted.
- The backhoe operator, who will have the best view of the test pit, shall immediately cease digging if:
  - Any fluid phase, including groundwater seepage, is encountered in the test pit
  - Any drums, other potential waste containers, obstructions, or utility lines are encountered
  - Distinct changes of material being excavated are encountered

This action is necessary to permit proper sampling of the test pit and to prevent a breach of safety protocol. Depending on the conditions encountered, it may be required to excavate more slowly and carefully with the backhoe.

For obtaining test pit samples from grade level, the following procedure shall be followed:

- Use the backhoe to remove loose material from the excavation walls and floor to the greatest extent possible.

- Secure the walls of the pit, if necessary. (There is seldom any need to enter a pit or trench that would justify the expense of shoring the walls. All observations and samples should be taken from the ground surface.)

- Samples of the test pit material are to be obtained either directly from the backhoe bucket or from the material after it has been deposited on the ground, as follows:

  a. The sampler or FOL shall direct the backhoe operator to remove material from the selected depth or location within the test pit/trench.

  b. The backhoe operator shall bring the bucket over to a designated location on the sidewall a sufficient distance from the pit (at least 5 feet) to allow the sampler to work around the bucket.

  c. After the bucket has been set on the ground, the backhoe operator shall either disengage the controls or shut the machine down.

  d. When signaled by the operator that it is safe to do, the sampler will approach the bucket.

  e. The soil shall be monitored with a photoionization or flame ionization detector (PID or FID) as directed in the project -specific planning documents.

  f. The sampler shall collect the sample from the center of the bucket or pile in accordance with surface soil sampling procedures of Section 6.3 or 6.4, as applicable. Collecting samples from the center of a pile or bucket eliminates cross-contamination from the bucket or other depth intervals.

- If a composite sample is desired, several depths or locations within the pit/trench will be selected, and the bucket will be filled from each area. It is preferable to send individual sample bottles filled from each bucket to the laboratory for compositing under the more controlled laboratory conditions. However, if compositing in the field is required, each sample container shall be filled from materials that have been transferred into a mixing bucket and homogenized. Note that homogenization/compositing is not applicable for samples to be subjected to volatile organic analysis.

> ***CAUTION***
>
> Care must be exercised when using the remote sampler described in the next step because of potential instability of trench walls. In situations where someone must move closer than 2 feet to the excavation edge, a board or platform should be used to displace the sampler's weight to minimize the chance of collapse of the excavation edge. Fall protection should also be employed when working near the edges or trenches greater than 6 feet deep. An immediate means to extract people who have fallen into the trench will be immediately available. These means may include ladders or rope anchor points.

- Using the remote sampler shown in Attachment D, samples can be taken at the desired depth from the sidewall or bottom of the pit as follows:

  a. Scrape the face of the pit/trench using a long-handled shovel or hoe to remove the smeared zone that has contacted the backhoe bucket.

  b. Collect the sample directly into the sample jar, by scraping with the jar edge, eliminating the need for sample handling equipment and minimizing the likelihood of cross-contamination.

c. Cap the sample jar, remove it from the remote sampler assembly, and package the sample for shipment in accordance with SOP SA-6.3.

- Complete documentation as described in SOP SA-6.3 and Attachment C of this SOP.

6.8.3.4 In-Pit Sampling

Under rare conditions, personnel may be required to enter the test pit/trench. This is necessary only when soil conditions preclude obtaining suitable samples from the backhoe bucket (e.g., excessive mixing of soil or wastes within the test pit/trench) or when samples from relatively small discrete zones within the test pit are required. This approach may also be necessary to sample any seepage occurring at discrete levels or zones in the test pit that are not accessible with remote samplers.

In general, personnel shall sample and log pits and trenches from the ground surface, except as provided for by the following criteria:

- There are no practical alternative means of obtaining such data.

- The SSO and Competent Person determine that such action can be accomplished without breaching site safety protocol. This determination will be based on actual monitoring of the pit/trench after it is dug (including, at a minimum, measurements of oxygen concentration, flammable gases, and toxic compounds, in that order). Action levels will be provided in project-specific planning documents.

- A company-designated Competent Person determines that the pit/trench is stable trough soil classification evaluation/inspections or is made stable (by cutting/grading the sidewalls or using shoring) prior to entrance of any personnel. OSHA requirements shall be strictly observed.

If these conditions are satisfied, only one person may enter the pit/trench. On potentially hazardous waste sites, this individual shall be dressed in selected PPE as required by the conditions in the pit. He/she shall be affixed to a harness and lifeline and continuously monitored while in the pit.

A second and possible third individual shall be fully dressed in protective clothing including a self-contained breathing device and on standby during all pit entry operations to support self rescue or assisted self rescue. The individual entering the pit shall remain therein for as brief a period as practical, commensurate with performance of his/her work. After removing the smeared zone, samples shall be obtained with a decontaminated trowel or spoon.

6.8.3.5 Geotechnical Sampling

In addition to the equipment described in Section 6.8.3.2, the following equipment is needed for geotechnical sampling:

- Soil sampling equipment, similar to that used in shallow drilled boring (i.e., thin-walled tube samplers), that can be pushed or driven into the floor of the test pit.

- Suitable driving (e,g., sledge hammer) or pushing (e.g., backhoe bucket) equipment used to advance the sampler into the soil.

- Knives, spatulas, and other suitable devices for trimming hand-carved samples.

- Suitable containers (bags, jars, tubes, boxes, etc.), labels, wax, etc. for holding and safely transporting collected soil samples.

- Geotechnical equipment (pocket penetrometer, torvane, etc.) for field testing collected soil samples for classification and strength properties.

Disturbed grab or bulk geotechnical soil samples may be collected for most soil in the same manner as comparable soil samples for chemical analysis. These collected samples may be stored in jars or plastic-lined sacks (larger samples), which will preserve their moisture content. Smaller samples of this type are usually tested for their index properties to aid in soil identification and classification: larger bulk samples are usually required to perform compaction tests.

Relatively undisturbed samples are usually extracted in cohesive soil using thin-walled tube samplers, and such samples are then tested in a geotechnical laboratory for their strength, permeability, and/or compressibility. The techniques for extracting and preserving such samples are similar to those used in performing Shelby tube sampling in borings, except that the sampler is advanced by hand or backhoe, rather than by a drill rig. Also, the sampler may be extracted from the test pit by excavation around the tube when it is difficult to pull it out of the ground. If this excavation requires entry of the test pit, the requirements described in Section 6.8.3.4 shall be followed. The thin-walled tube sampler shall be pushed or driven vertically into the floor or steps excavated in the test pit at the desired sampling elevations. Extracting tube samples horizontally from the walls of the test pit is not appropriate because the sample will not have the correct orientation.

A sledge hammer or backhoe may be used to drive or push the tube into the ground. Place a piece of wood over the top of the sampler or sampling tube to prevent damage during driving/pushing of the sample. Pushing the sampler with a constant thrust is always preferable to driving it with repeated blows, thus minimizing disturbance to the sample. When using a sledge hammer, it is recommended that the sampler be stabilized using a rope/strap wrench or pipe wrench to remove the person's hands holding the sampler from the strike zone. If the sample cannot be extracted by rotating it at least two revolutions (to shear off the sample at the bottom), hook the sampler to the excavator or backhoe and extract. This means an alternative head will be used as a connection point or that multiple choke hitches will be applied to extract the sampler. If this fails and the excavator can dig deeper without potentially impacting subsurface utilities, excavate the sampler. If this fails or if the excavator cannot be used due to subsurface utilities, hand-excavate to remove the soil from around the sides of the sampler. If hand-excavation requires entry into the test pit, the requirements in Section 6.8.3.4 must be followed. Prepare the sample as described in Steps 9 through 13 in Section 6.2.3, and label, pack and transport the sample in the required manner, as described in SOPs SA-6.3 and SA-6.1.

6.8.4 Backfilling of Trenches and Test Pits

All test pits and excavations must be either backfilled, covered, or otherwise protected at the end of each day. No excavations shall remain open during non-working hours unless adequately covered or otherwise protected.

Before backfilling, the onsite crew may photograph, if required by the project-specific work plan, all significant features exposed by the test pit and trench and shall include in the photograph a scale to show dimensions. Photographs of test pits shall be marked to include site number, test pit number, depth, description of feature, and date of photograph. In addition, a geologic description of each photograph shall be entered in the site logbook. All photographs shall be indexed and maintained as part of the project file for future reference.

After inspection, backfill material shall be returned to the pit under the direction of the FOL. Backfill should be returned to the trench or test pit in 6-inch to 1-foot lifts and compacted with the bucket. Remote controlled tampers or rollers may be lowered into the trench and operated from top side. This procedure will continue to the grade surface. It is recommended that the trench be tracked or rolled in. During

excavation, clean soil from the top 2 feet may have been separated to be used to cover the last segments. Where these materials are not clean, it is recommended that clean fill be used for the top cover.

If a low-permeability layer is penetrated (resulting in groundwater flow from an upper contaminated flow zone into a lower uncontaminated flow zone), backfill material must represent original conditions or be impermeable. Backfill could consist of a soil-bentonite mix prepared in a proportion specified by the FOL (representing a permeability equal to or less than original conditions). Backfill can be covered by "clean" soil and graded to the original land contour. Revegetation of the disturbed area may also be required.

6.9 Records

The appropriate sample log sheet (see Attachment A of this SOP) must be completed by the site geologist/sampler for all samples collected. All soil sampling locations should be documented by tying in the location of two or more nearby permanent landmarks (building, telephone pole, fence, etc.) or obtaining GPS coordinates; and shall be noted on the appropriate sample log sheet, site map, or field notebook. Surveying may also be necessary, depending on the project requirements.

Test pit logs (see Attachment C of this SOP) shall contain a sketch of pit conditions. If the project-specific work plan requires photographs, at least one photograph with a scale for comparison shall be taken of each pit. Included in the photograph shall be a card showing the test pit number. Boreholes, test pits, and trenches shall be logged by the field geologist in accordance with SOP GH-1.5.

Other data to be recorded in the field logbook include the following:

- Name and location of job
- Date of boring and excavation
- Approximate surface elevation
- Total depth of boring and excavation
- Dimensions of pit
- Method of sample acquisition
- Type and size of samples
- Soil and rock descriptions
- Photographs if required
- Groundwater levels
- PID/FID/LEL/O_2 meter readings
- Other pertinent information, such as waste material encountered

In addition, site-specific documentation to be maintained by the SSO and/or Competent Person will be required including:

- Calibration logs
- Excavation inspection checklists
- Soil type classification

7.0 REFERENCES

American Society for Testing and Materials, 1987. ASTM Standards D1587-83 and D1586-84. ASTM Annual Book of Standards. ASTM. Philadelphia, Pennsylvania. Volume 4.08.

NUS Corporation, 1986. Hazardous Material Handling Training Manual.

NUS Corporation and CH2M Hill, August, 1987. Compendium of Field Operation Methods. Prepared for the U.S. EPA.

OSHA, Excavation, Trenching and Shoring 29 CFR 1926.650-653.

OSHA, Confined Space Entry 29 CFR 1910.146.

USEPA, November 2001. Environmental Investigations Standard Operating Procedures and Quality Assurance Manual.

ATTACHMENT A
SOIL & SEDIMENT SAMPLE LOG SHEET

Tetra Tech NUS, Inc.

SOIL & SEDIMENT SAMPLE LOG SHEET

Page___ of ___

Project Site Name: _____
Project No.: _____

[] Surface Soil
[] Subsurface Soil
[] Sediment
[] Other: _____
[] QA Sample Type: _____

Sample ID No.: _____
Sample Location: _____
Sampled By: _____
C.O.C. No.: _____

Type of Sample:
[] Low Concentration
[] High Concentration

GRAB SAMPLE DATA:

Date:	Depth	Color	Description (Sand, Silt, Clay, Moisture, etc.)
Time:			
Method:			
Monitor Reading (ppm):			

COMPOSITE SAMPLE DATA:

Date:	Time	Depth	Color	Description (Sand, Silt, Clay, Moisture, etc.)
Method:				
Monitor Readings (Range in ppm):				

SAMPLE COLLECTION INFORMATION:

Analysis	Container Requirements	Collected	Other

OBSERVATIONS / NOTES:

MAP:

Circle if Applicable:

MS/MSD	Duplicate ID No.:

Signature(s):

ATTACHMENT B
SPLIT-SPOON SAMPLER

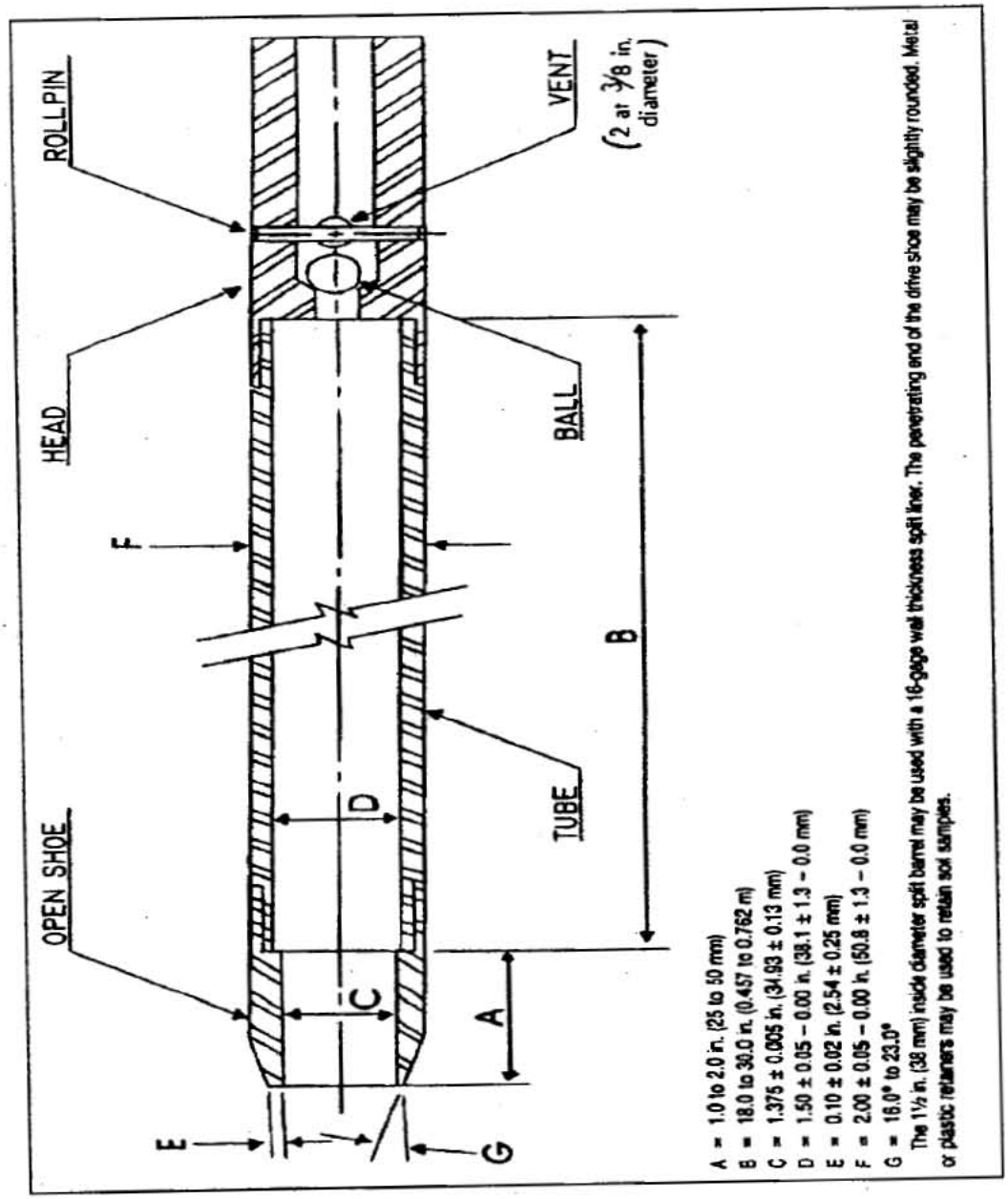

A = 1.0 to 2.0 in. (25 to 50 mm)
B = 18.0 to 30.0 in. (0.457 to 0.762 m)
C = 1.375 ± 0.005 in. (34.93 ± 0.13 mm)
D = 1.50 ± 0.05 – 0.00 in. (38.1 ± 1.3 – 0.0 mm)
E = 0.10 ± 0.02 in. (2.54 ± 0.25 mm)
F = 2.00 ± 0.05 – 0.00 in. (50.8 ± 1.3 – 0.0 mm)
G = 16.0° to 23.0°

The 1½ in. (38 mm) inside diameter split barrel may be used with a 16-gage wall thickness split liner. The penetrating end of the drive shoe may be slightly rounded. Metal or plastic retainers may be used to retain soil samples.

ATTACHMENT C
TEST PIT LOG

Tetra Tech NUS, Inc.

TEST PIT LOG

Page ___ of ___

PROJECT NAME: _____ TEST PIT No.: _____
PROJECT NUMBER: _____ DATE: _____
LOCATION: _____ GEOLOGIST: _____

Depth (Ft.)	Lithology Change (Depth/Ft.)	MATERIAL DESCRIPTION Soil/Waste Characteristics (lithology, density, color, etc.)	USCS	Remarks	PID/FID READING Source (ppm)	BZ (ppm)

TEST PIT CROSS SECTION AND / OR PLAN VIEW

REMARKS: _____

PHOTO LOG: _____

ATTACHMENT D
REMOTE SAMPLE HOLDER FOR TEST PIT/TRENCH SAMPLING

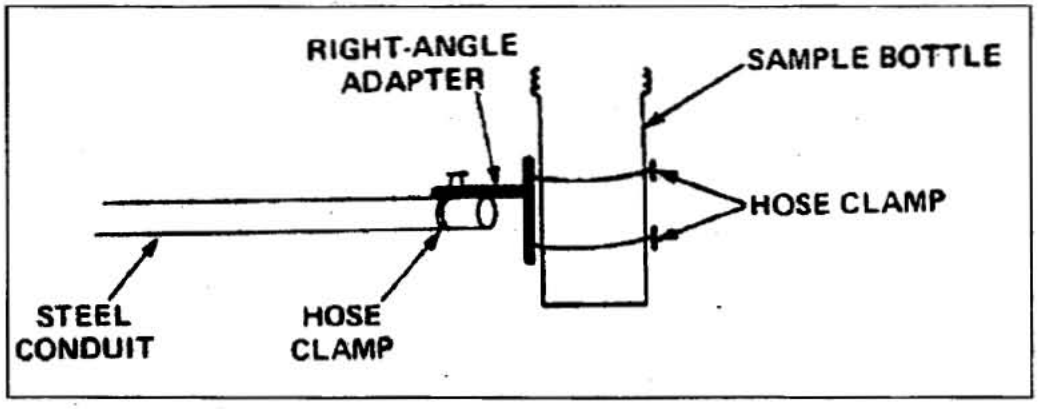

Appendix B

TABLE OF CONTENTS

SECTION **PAGE**

1.0 PURPOSE **2**

2.0 SCOPE **2**

3.0 GLOSSARY **2**

4.0 RESPONSIBILITIES **2**

5.0 PROCEDURES **2**

5.1 SITE LOGBOOK 2
5.1.1 General 2
5.1.2 Photographs 3
5.2 FIELD NOTEBOOKS 3
5.3 FIELD FORMS 4
5.3.1 Sample Collection, Labeling, Shipment, Request for Analysis, and Field Test Results .. 4
5.3.2 Hydrogeological and Geotechnical Forms 5
5.3.3 Equipment Calibration and Maintenance Form 6
5.4 FIELD REPORTS 6
5.4.1 Daily Activities Report 6
5.4.2 Weekly Status Reports 7

6.0 LISTING OF TETRA TECH NUS FIELD FORMS FOUND ON THE TTNUS INTRANET SITE. HTTP://INTRANET.TTNUS.COM CLICK ON FIELD LOG SHEETS **7**

ATTACHMENTS

A TYPICAL SITE LOGBOOK ENTRY **9**
B SAMPLE LABEL **10**
C CHAIN-OF-CUSTODY RECORD FORM **11**
D CHAIN-OF-CUSTODY SEAL **12**

1.0 PURPOSE

The purpose of this Standard Operating Procedure (SOP) is to identify and designate the field data record forms, logs and reports generally initiated and maintained for documenting Tetra Tech NUS field activities.

2.0 SCOPE

Documents presented within this procedure (or equivalents) shall be used for all Tetra Tech NUS field activities, as applicable. Other or additional documents may be required by specific client contracts or project planning documents.

3.0 GLOSSARY

None

4.0 RESPONSIBILITIES

Project Manager (PM) - The Project Manager is responsible for obtaining hardbound, controlled-distribution logbooks (from the appropriate source), as needed. In addition, the Project Manager is responsible for placing all field documentation used in site activities (i.e., records, field reports, sample data sheets, field notebooks, and the site logbook) in the project's central file upon the completion of field work.

Field Operations Leader (FOL) - The Field Operations Leader is responsible for ensuring that the site logbook, notebooks, and all appropriate and current forms and field reports illustrated in this guideline (and any additional forms required by the contract) are correctly used, accurately filled out, and completed in the required time-frame.

5.0 PROCEDURES

5.1 Site Logbook

5.1.1 General

The site logbook is a hard-bound, paginated, controlled-distribution record book in which all major onsite activities are documented. At a minimum, the following activities/events shall be recorded or referenced (daily) in the site logbook:

- All field personnel present
- Arrival/departure of site visitors
- Time and date of H&S training
- Arrival/departure of equipment
- Time and date of equipment calibration
- Start and/or completion of borehole, trench, monitoring well installation, etc.
- Daily onsite activities performed each day
- Sample pickup information
- Health and Safety issues (level of protection observed, etc.)
- Weather conditions

A site logbook shall be maintained for each project. The site logbook shall be initiated at the start of the first onsite activity (e.g., site visit or initial reconnaissance survey). Entries are to be made for every day

that onsite activities take place which involve Tetra Tech NUS or subcontractor personnel. Upon completion of the fieldwork, the site logbook must become part of the project's central file.

The following information must be recorded on the cover of each site logbook:

- Project name
- Tetra Tech NUS project number
- Sequential book number
- Start date
- End date

Information recorded daily in the site logbook need not be duplicated in other field notebooks (see Section 5.2), but must summarize the contents of these other notebooks and refer to specific page locations in these notebooks for detailed information (where applicable). An example of a typical site logbook entry is shown in Attachment A.

If measurements are made at any location, the measurements and equipment used must either be recorded in the site logbook or reference must be made to the field notebook in which the measurements are recorded (see Attachment A).

All logbook, notebook, and log sheet entries shall be made in indelible ink (black pen is preferred). No erasures are permitted. If an incorrect entry is made, the entry shall be crossed out with a single strike mark, and initialed and dated. At the completion of entries by any individual, the logbook pages used must be signed and dated. The site logbook must also be signed by the Field Operations Leader at the end of each day.

5.1.2 Photographs

When movies, slides, or photographs are taken of a site or any monitoring location, they must be numbered sequentially to correspond to logbook/notebook entries. The name of the photographer, date, time, site location, site description, and weather conditions must be entered in the logbook/notebook as the photographs are taken. A series entry may be used for rapid-sequence photographs. The photographer is not required to record the aperture settings and shutter speeds for photographs taken within the normal automatic exposure range. However, special lenses, films, filters, and other image-enhancement techniques must be noted in the logbook/notebook. If possible, such techniques shall be avoided, since they can adversely affect the accuracy of photographs. Chain-of-custody procedures depend upon the subject matter, type of camera (digital or film), and the processing it requires. Film used for aerial photography, confidential information, or criminal investigation require chain-of-custody procedures. Once processed, the slides of photographic prints shall be consecutively numbered and labeled according to the logbook/notebook descriptions. The site photographs and associated negatives and/or digitally saved images to compact disks must be docketed into the project's central file.

5.2 Field Notebooks

Key field team personnel may maintain a separate dedicated field notebook to document the pertinent field activities conducted directly under their supervision. For example, on large projects with multiple investigative sites and varying operating conditions, the Health and Safety Officer may elect to maintain a separate field notebook. Where several drill rigs are in operation simultaneously, each site geologist assigned to oversee a rig must maintain a field notebook.

5.3 Field Forms

All Tetra Tech NUS field forms (see list in Section 6.0 of this SOP) can be found on the company's intranet site (http://intranet.ttnus.com) under Field Log Sheets. Forms may be altered or revised for project-specific needs contingent upon client approval. Care must be taken to ensure that all essential information can be documented. Guidelines for completing these forms can be found in the related sampling SOP.

5.3.1 Sample Collection, Labeling, Shipment, Request for Analysis, and Field Test Results

5.3.1.1 Sample Log Sheet

Sample Log Sheets are used to record specified types of data while sampling. The data recorded on these sheets are useful in describing the sample as well as pointing out any problems, difficulties, or irregularities encountered during sampling. A log sheet must be completed for each sample obtained, including field quality control (QC) samples.

5.3.1.2 Sample Label

A typical sample label is illustrated in Attachment B. Adhesive labels must be completed and applied to every sample container. Sample labels can usually be obtained from the appropriate Program source electronically generated in-house, or are supplied from the laboratory subcontractor.

5.3.1.3 Chain-of-Custody Record Form

The Chain-of-Custody (COC) Record is a multi-part form that is initiated as samples are acquired and accompanies a sample (or group of samples) as they are transferred from person to person. This form must be used for any samples collected for chemical or geotechnical analysis whether the analyses are performed on site or off site. One carbonless copy of the completed COC form is retained by the field crew, one copy is sent to the Project Manager (or designee), while the original is sent to the laboratory. The original (top, signed copy) of the COC form shall be placed inside a large Ziploc-type bag and taped inside the lid of the shipping cooler. If multiple coolers are sent but are included on one COC form, the COC form should be sent with the cooler containing vials for VOC analysis or the cooler with the air bill attached. The air bill should then state how many coolers are included with that shipment. An example of a Chain-of-Custody Record form is provided as Attachment C. Once the samples are received at the laboratory, the sample cooler and contents are checked and any problems are noted on the enclosed COC form (any discrepancies between the sample labels and COC form and any other problems that are noted are resolved through communication between the laboratory point-of-contact and the Tetra Tech NUS Project Manager). The COC form is signed and copied. The laboratory will retain the copy while the original becomes part of the samples' corresponding analytical data package.

5.3.1.4 Chain-of-Custody Seal

Attachment D is an example of a custody seal. The Custody seal is an adhesive-backed label. It is part of a chain-of-custody process and is used to prevent tampering with samples after they have been collected in the field and sealed in coolers for transport to the laboratory. The COC seals are signed and dated by the sampler(s) and affixed across the lid and body of each cooler (front and back) containing environmental samples (see SOP SA-6.1). COC seals may be available from the laboratory; these seals may also be purchased from a supplier.

5.3.1.5 Geochemical Parameters Log Sheets

Field Analytical Log Sheets are used to record geochemical and/or natural attenuation field test results.

5.3.2 Hydrogeological and Geotechnical Forms

5.3.2.1 Groundwater Level Measurement Sheet

A Groundwater Level Measurement Sheet must be filled out for each round of water level measurements made at a site.

5.3.2.2 Data Sheet for Pumping Test

During the performance of a pumping test (or an in-situ hydraulic conductivity test), a large amount of data must be recorded, often within a short time period. The Pumping Test Data Sheet facilitates this task by standardizing the data collection format for the pumping well and observation wells, and allowing the time interval for collection to be laid out in advance.

5.3.2.3 Packer Test Report Form

A Packer Test Report Form must be completed for each well upon which a packer test is conducted.

5.3.2.4 Boring Log

During the progress of each boring, a log of the materials encountered, operation and driving of casing, and location of samples must be kept. The Summary Log of Boring, or Boring Log is used for this purpose and must be completed for each soil boring performed. In addition, if volatile organics are monitored on cores, samples, cuttings from the borehole, or breathing zone, (using a PID or FID), these readings must be entered on the boring log at the appropriate depth. The "Remarks" column can be used to subsequently enter the laboratory sample number, the concentration of key analytical results, or other pertinent information. This feature allows direct comparison of contaminant concentrations with soil characteristics.

5.3.2.5 Monitoring Well Construction Details Form

A Monitoring Well Construction Details Form must be completed for every monitoring well, piezometer, or temporary well point installed. This form contains specific information on length and type of well riser pipe and screen, backfill, filter pack, annular seal and grout characteristics, and surface seal characteristics. This information is important in evaluating the performance of the monitoring well, particularly in areas where water levels show temporal variation, or where there are multiple (immiscible) phases of contaminants. Depending on the type of monitoring well (in overburden or bedrock, stick-up or flush mount), different forms are used.

5.3.2.6 Test Pit Log

When a test pit or trench is constructed for investigative or sampling purposes, a Test Pit Log must be filled out by the responsible field geologist or sampling technician.

5.3.2.7 Miscellaneous Monitoring Well Forms

Monitoring Well Materials Certificate of Conformance should be used as the project directs to document all materials utilized during each monitoring well installation.

The Monitoring Well Development Record should be used as the project directs to document all well development activities.

5.3.2.8 Miscellaneous Field Forms - QA and Checklists

Container Sample and Inspection Sheet should be used as the project directs each time a container (drum, tank, etc.) is sampled and/or inspected.

QA Sample Log Sheet should be used at the project directs each time a QA sample is colleted, such as Rinsate Blank, Source Blank, etc.

Field Task Modification Request (FTMR) will be prepared for all deviations from the project planning documents. The FOL is responsible for initiating the FTMRs. Copies of all FTMRs will be maintained with the onsite planning documents and originals will be placed in the final evidence file.

The Field Project Daily Activities Check List and Field Project Pre-Mobilization Checklist should be used during both the planning and field effort to assure that all necessary tasks are planned for and completed. These two forms are not a requirement but a useful tool for most field work.

5.3.3 Equipment Calibration and Maintenance Form

The calibration or standardization of monitoring, measuring or test equipment is necessary to assure the proper operation and response of the equipment, to document the accuracy, precision or sensitivity of the measurement, and determine if correction should be applied to the readings. Some items of equipment require frequent calibration, others infrequent. Some are calibrated by the manufacturer, others by the user.

Each instrument requiring calibration has its own Equipment Calibration Log which documents that the manufacturer's instructions were followed for calibration of the equipment, including frequency and type of standard or calibration device. An Equipment Calibration Log must be maintained for each electronic measuring device used in the field; entries must be made for each day the equipment is used or in accordance with the manufacturer's recommendations.

5.4 Field Reports

The primary means of recording onsite activities is the site logbook. Other field notebooks may also be maintained. These logbooks and notebooks (and supporting forms) contain detailed information required for data interpretation or documentation, but are not easily useful for tracking and reporting of progress. Furthermore, the field logbook/notebooks remain onsite for extended periods of time and are thus not accessible for timely review by project management.

5.4.1 Daily Activities Report

To provide timely oversight of onsite contractors, Daily Activities Reports are completed and submitted as described below.

5.4.1.1 Description

The Daily Activities Report (DAR) documents the activities and progress for each day's field work. This report must be filled out on a daily basis whenever there are drilling, test pitting, well construction, or other related activities occurring which involve subcontractor personnel. These sheets summarize the work performed and form the basis of payment to subcontractors. The DAR form can be found on the TtNUS intranet site.

5.4.1.2 Responsibilities

It is the responsibility of the rig geologist to complete the DAR and obtain the driller's signature acknowledging that the times and quantities of material entered are correct.

5.4.1.3 Submittal and Approval

At the end of the shift, the rig geologist must submit the Daily Activities Report to the Field Operations Leader (FOL) for review and filing. The Daily Activities Report is not a formal report and thus requires no further approval. The DAR reports are retained by the FOL for use in preparing the site logbook and in preparing weekly status reports for submission to the Project Manager.

5.4.2 Weekly Status Reports

To facilitate timely review by project management, photocopies of logbook/notebook entries may be made for internal use.

It should be noted that in addition to summaries described herein, other summary reports may also be contractually required.

All Tetra Tech NUS field forms can be found on the company's intranet site at http://intranet.ttnus.com under Field Log Sheets.

6.0 LISTING OF TETRA TECH NUS FIELD FORMS FOUND ON THE TTNUS INTRANET SITE. HTTP://INTRANET.TTNUS.COM CLICK ON FIELD LOG SHEETS

Groundwater Sample Log Sheet
Surface Water Sample Log Sheet
Soil/Sediment Sample Log Sheet
Container Sample and Inspection Sheet
Geochemical Parameters (Natural Attenuation)
Groundwater Level Measurement Sheet
Pumping Test Data Sheet
Packer Test Report Form
Boring Log
Monitoring Well Construction Bedrock Flush Mount
Monitoring Well Construction Bedrock Open Hole
Monitoring Well Construction Bedrock Stick Up
Monitoring Well Construction Confining Layer
Monitoring Well Construction Overburden Flush Mount
Monitoring Well Construction Overburden Stick Up
Test Pit Log
Monitoring Well Materials Certificate of Conformance
Monitoring Well Development Record

Daily Activities Record
Field Task Modification Request
Hydraulic Conductivity Test Data Sheet
Low Flow Purge Data Sheet
QA Sample Log Sheet
Equipment Calibration Log
Field Project Daily Activities Checklist
Field Project Pre-Mobilization Checklist

ATTACHMENT A
TYPICAL SITE LOGBOOK ENTRY

START TIME: _____ DATE: _____

SITE LEADER: _____

PERSONNEL:

TtNUS	DRILLER	SITE VISITORS
_____	_____	_____
_____	_____	_____
_____	_____	_____

WEATHER: Clear, 68°F, 2-5 mph wind from SE

ACTIVITIES:

1. Steam jenney and fire hoses were set up.
2. Drilling activities at well ____ resumes. Rig geologist was _____. See Geologist's Notebook, No. 1, page 29-30, for details of drilling activity. Sample No. 123-21-S4 collected; see sample logbook, page 42. Drilling activities completed at 11:50 and a 4-inch stainless steel well installed. See Geologist's Notebook, No. 1, page 31, and well construction details for well _____.
3. Drilling rig No. 2 steam-cleaned at decontamination pit. Then set up at location of well _____.
4. Well _____ drilled. Rig geologist was _____. See Geologist's Notebook, No. 2, page ____ for details of drilling activities. Sample numbers 123-22-S1, 123-22-S2, and 123-22-S3 collected; see sample logbook, pages 43, 44, and 45.
5. Well _____ was developed. Seven 55-gallon drums were filled in the flushing stage. The well was then pumped using the pitcher pump for 1 hour. At the end of the hour, water pumped from well was "sand free."
6. EPA remedial project manger arrives on site at 14:25 hours.
7. Large dump truck arrives at 14:45 and is steam-cleaned. Backhoe and dump truck set up over test pit _____.
8. Test pit _____ dug with cuttings placed in dump truck. Rig geologist was _____. See Geologist's Notebook, No. 1, page 32, for details of test pit activities. Test pit subsequently filled. No samples taken for chemical analysis. Due to shallow groundwater table, filling in of test pit ___ resulted in a very soft and wet area. A mound was developed and the area roped off.
9. Express carrier picked up samples (see Sample Logbook, pages 42 through 45) at 17:50 hours. Site activities terminated at 18:22 hours. All personnel off site, gate locked.

_____

Field Operations Leader

ATTACHMENT B

Tetra Tech NUS, Inc. 661 Andersen Drive Pittsburgh, 15220 (412)921-7090	**Project:** **Site:** **Location:**		
Sample No:			**Matrix:**
Date:	**Time:**	**Preserve:**	
Analysis:			
Sampled by:	**Laboratory:**		

ATTACHMENT C

TETRA TECH NUS, INC. CHAIN OF CUSTODY | NUMBER 3413 | PAGE ___ OF ___

PROJECT NO:	FACILITY:	PROJECT MANAGER	PHONE NUMBER	LABORATORY NAME AND CONTACT:
SAMPLERS (SIGNATURE)		FIELD OPERATIONS LEADER	PHONE NUMBER	ADDRESS
		CARRIER/WAYBILL NUMBER		CITY, STATE

STANDARD TAT ☐
RUSH TAT ☐
☐ 24 hr. ☐ 48 hr. ☐ 72 hr. ☐ 7 day ☐ 14 day

CONTAINER TYPE PLASTIC (P) or GLASS (G)
PRESERVATIVE USED
TYPE OF ANALYSIS

DATE YEAR	TIME	SAMPLE ID	LOCATION ID	TOP DEPTH (FT)	BOTTOM DEPTH (FT)	MATRIX (GW, SO, SW, SD, QC, ETC.)	COLLECTION METHOD GRAP (G) COMP (C)	No. OF CONTAINERS									COMMENTS

1. RELINQUISHED BY	DATE	TIME	1. RECEIVED BY	DATE	TIME
2. RELINQUISHED BY	DATE	TIME	2. RECEIVED BY	DATE	TIME
3. RELINQUISHED BY	DATE	TIME	3. RECEIVED BY	DATE	TIME
COMMENTS					

DISTRIBUTION: WHITE (ACCOMPANIES SAMPLE) YELLOW (FIELD COPY) PINK (FILE COPY)

4/02R
FORM NO. TtNUS-001

ATTACHMENT D

CHAIN-OF-CUSTODY SEAL

CUSTODY SEAL	**CUSTODY SEAL**
Date	**Date**
Signature	**Signature**