M67001.AR.002795
MCB CAMP LEJEUNE
5090.3a

Final

Expanded Site Inspection Report MCAS New River Buildings SAS113, AS116, and AS119 and Montford Point Buildings M119 and M315

Marine Corps Base Camp Lejeune
Jacksonville, North Carolina

Prepared for

Department of the Navy

Naval Facilities Engineering Command Mid-Atlantic Division

Contract No.
N62470-08-D-1000
CTO-0074

April 2010

Prepared by

CH2MHILL

Final

Expanded Site Inspection Report MCAS New River Buildings SAS113, AS116, and AS119 and Montford Point Buildings M119 and M315

Marine Corps Base Camp Lejeune Jacksonville, North Carolina

Contract Task Order 074

April 2010

Prepared for
Department of the Navy
Naval Facilities Engineering Command
Mid-Atlantic

Under the
NAVFAC CLEAN 1000 Program
Contract N62470-08-D-1000

Prepared by

CH2MHILL

11301 Carmel Commons Blvd., Suite 304
Charlotte, North Carolina 28226
NC Engineering License #F-0699

Executive Summary

This document presents the findings and conclusions of the Expanded Site Inspection (SI) conducted at Montford Point Buildings M119 and M315 and Marine Corps Air Station (MCAS) New River Buildings SAS113, AS116, and AS119 located on Marine Corps Base Camp Lejeune (MCB CamLej) in Jacksonville, North Carolina. This Expanded SI Report was prepared by CH2M HILL under the Naval Facilities Engineering Command (NAVFAC), Mid-Atlantic Division, Comprehensive Long-term Environmental Action—Navy (CLEAN) 1000 Contract N62470-08-D-1000, Contract Task Order (CTO) 074. Field investigations were conducted in general accordance with the *Groundwater Sampling and Analysis Plan, Expanded Site Investigation for MCAS New River Buildings SAS113, AS116, and AS119* (CH2M HILL, 2009). That document was prepared in accordance with the Uniform Federal Policy for Sampling and Analysis Plans and is therefore referred to as the UFP-SAP. The UFP-SAP was approved by NAVFAC, Marine Corps Base Camp Lejeune (CamLej), the United States Environmental Protection Agency (USEPA), and the North Carolina Department of Environment and Natural Resources (NCDENR).

A Preliminary Assessment/Site Investigation (PA/SI) report was prepared in 2006 (CH2M HILL, 2006) documenting the findings of the PA/SI field investigation conducted by Baker Environmental (Baker) between 2002 and 2004. Buildings were identified for investigation based on history as storage facilities and automotive repair facilities. The PA/SI was conducted to characterize potential contamination at the site, to evaluate the potential risks to human health and the environment posed by historical land use practices at the buildings, and to evaluate whether additional investigation and/or remediation activities are necessary. The results of the PA/SI identified metals constituents in the Surficial Aquifer at Montford Point Buildings M119 and M315 and MCAS New River Buildings SAS113, AS116, and AS119, and recommended further investigation of metals in groundwater at the five buildings. The PA/SI also identified metals in soil at Building M315, and recommended further investigations. Upon further review by the Partnering Team in 2009, it was determined that the detection of metals at Buildings M119 and M315 did not warrant additional investigation.

The elevated metals results in groundwater at Buildings SAS113, AS116, and AS119 are thought to be due to the sampling technique used during the PA/SI. As a result, an Expanded SI was conducted to confirm that those elevated concentrations detected in the Surficial Aquifer during the PA/SI were the result of the sampling technique used. Field activities for the Expanded SI included locating buried utilities, performing environmental sampling activities, and surveying monitoring well locations. Environmental sampling activities included the installation of groundwater monitoring wells and collection and analysis of groundwater samples. These samples were analyzed for metals specifically selected for each building.

The environmental investigation included collection of the following samples:

- Three groundwater samples were collected from monitoring wells SAS113-MW01 through SAS-MW03, which were installed adjacent to Building SAS113.

- Three groundwater samples were collected from monitoring wells AS116-MW01 through AS116-MW03, which were installed adjacent to Building AS116.
- Three groundwater samples were collected from monitoring wells AS119-MW01 through AS119-MW03, which were installed adjacent to Building AS119.

A summary of the analytical results is provided below.

Groundwater

Analytical results for groundwater were compared to two times the mean Base background concentrations (Base background), and then to the North Carolina Groundwater Quality Standards (NCGWQS), or Maximum Contaminant Levels (MCLs), whichever was the more stringent standard.

Iron was detected in all nine wells installed during the Expanded SI. All of the samples collected from Buildings SAS113 and AS116, as well as two samples collected from Building AS119, exceeded the NCGWQS for iron. Of these, the three samples collected from Building SAS113 and one sample collected from Building AS116 (AS116-MW02) also exceeded the Base background concentration. No other metals were detected in groundwater samples at concentrations exceeding both Base background concentrations and the NCGWQS or MCLs.

Human Health Risk Screening

Analytical results from the Expanded SI were used to determine the applicability of human health risk screening for groundwater at each building. Only groundwater analytical data that exceeded the Base background and NCGWQS concentrations were selected for human health risk screening. Based on the analytical results, human health risk screenings were conducted for Buildings SAS113 and AS116. Each screening was performed in two steps using a risk ratio technique (U.S. Navy, 2000). If contaminants of potential concern (COPCs) were identified after Step 1, the COPCs were carried forward and evaluated in Step 2.

Step 1 identified iron as a COPC at Buildings SAS113 and AS116; therefore, only iron was carried forward into Step 2. The results of Step 2 indicated a cumulative corresponding hazard index of 0.3 at both buildings, which were below the target level of 0.5 for iron in groundwater.

Therefore, based on the human health risk screenings for groundwater, there are no unacceptable risks for current or future human health exposure at Buildings SAS113 or AS116.

Ecological Risk Screening

No exposures of ecological receptors to groundwater were identified in the vicinity of Buildings SAS113, AS116, or AS119. Further, groundwater discharge points were not encountered in the vicinity of Buildings SAS113, AS116, or AS119. As a result, a complete exposure pathway for ecological receptors could not be identified and an ecological risk screening was not performed.

Recommendations

Based on the results of the Expanded SI, no further action is recommended for Montford Point Buildings M119 and M315 and MCAS New River Buildings SAS113, AS116, and AS119. The abandonment of the nine monitoring wells associated with this Expanded SI is recommended.

Contents

1. Introduction 1-1
1.1 Objectives and Approach 1-1
1.2 Report Organization 1-2

2. Background 2-1
2.1 MCB CamLej Setting and History 2-1
2.2 Site History and Previous Investigations 2-1
2.2.1 Preliminary Assessment Sites 2-1
2.2.2 SWMU Investigations 2-9

3. Physical Characteristics 3-1
3.1 Physical Setting and Regional Hydrogeology 3-1
3.1.1 Regional and Facility-wide Physiography, Climate, and Surface Water Hydrology 3-1
3.1.2 Site Topography, Drainage, and Surface Features 3-1
3.2 Geology and Hydrogeology 3-1
3.2.1 General Regional Geologic and Hydrogeologic Framework 3-1
3.2.2 Site-Specific Geologic and Hydrogeologic Framework 3-2
3.3 Regional Water Usage 3-2

4. Field Investigation Activities 4-1
4.1 Field Investigation Activities 4-1
4.2 Monitoring Well Installation 4-1
4.3 Groundwater Sampling 4-2
4.4 Site Survey 4-2
4.5 Data Tracking and Validation 4-2

5. Investigation Results 5-1
5.1 Groundwater Analytical Results 5-1
5.1.1 Building SAS113 5-1
5.1.2 Building AS116 5-1
5.1.3 Building AS119 5-1

6. Risk Screenings 6-1
6.1 Human Health Risk Screening 6-1
6.1.1 Step 1 6-1
6.1.2 Step 2 6-2
6.2 Human Health Risk Screening Results 6-2
6.2.1 Building SAS113 6-2
6.2.2 Building AS116 6-2
6.3 Ecological Risk Screening 6-2

7. Conclusions and Recommendations 7-1
7.1 Building M119 7-1
7.2 Building M315 7-1

7.3 Building SAS113 7-1
7.4 Building AS116 7-1
7.5 Building AS119 7-2

8. References..... 8-1

Appendices

A Boring Logs
B Well Construction Diagrams
C Chain of Custody Forms
D Analytical Results
E Human Health Risk Screening

Tables

3-1 Hydrostratigraphic Units of the North Carolina Coastal Plain
3-2 Summary of Well Construction and Groundwater Elevations
3-3 Regional Water Supply Wells

4-1 Sample Analysis Summary
4-2 Groundwater Quality Parameters

Figures

1-1 Base Location

2-1 HPIA PA/SI Sample Locations
2-2 Montford Point PA/SI Exceedances
2-3 MCAS New River PA/SI Exceedances
2-4 MCAS New River Historical Sample Locations

3-1 Physiographic Provinces of Eastern North Carolina
3-2 Topographic Map
3-3 Groundwater Elevations
3-4 Water Supply Wells

5-1 Analytical Results

Acronyms and Abbreviations

AHEC	AH Environmental Consultants
BEHP	bis (2-ethylhexyl) phthalate
Beta-BHC	beta-benzene hexachloride
bgs	below ground surface
CamLej	Marine Corps Base Camp Lejeune
CERCLA	Comprehensive Environmental Response, Compensation, and Liability Act of 1980
CLEAN	Comprehensive Long-term Environmental Action—Navy
COC	chain of custody
COPC	constituent of potential concern
CSI	Confirmatory Site Investigation
CTO	Contract Task Order
DDD	4,4′-dichlorodiphenyldichloroethane
DO	dissolved oxygen
DoN	Department of the Navy
DPT	direct push technology
°F	degrees Fahrenheit
FFA	Federal Facilities Agreement
ft	foot/feet
ID	inside diameter
LTM	long-term monitoring
LUC	land use control
MCAS	Marine Corps Air Station
MCB	Marine Corps Base
MCCS	Marine Corps Community Services
MCL	Maximum Contaminant Level
µg/L	microgram per liter
MS/MSD	matrix spike/matrix spike duplicate
msl	mean sea level
mV	millivolt
NAD	North American Datum
NAVD	North American Vertical Datum
NAVFAC	Naval Facilities Engineering Command
NCDENR	North Carolina Department of Environment and Natural Resources
NCGWQS	North Carolina Groundwater Quality Standards
NPL	National Priorities List
NTU	Nephelometric Turbidity Unit
ORP	oxidation-reduction potential

PA/SI	Preliminary Assessment/Site Inspection
PCBs	polychlorinated biphenyls
PVC	polyvinyl chloride
QA/QC	quality assurance/quality control
RCRA	Resource Conservation and Recovery Act
RFI	RCRA Facility Investigation
RSL	Regional Screening Level
SI	Site Inspection
SOP	standard operating procedure
SVOC	semivolatile organic compound
SWMU	solid waste management unit
TAL	target analyte list
TCL	target compound list
U.S.	United States
USEPA	United States Environmental Protection Agency
USF-SAP	Uniform Federal Policy, *Groundwater Sampling and Analysis Plan, Expanded Site Investigation, MCAS New River Buildings SAS113, AS116, and AS119*
VOC	volatile organic compound

SECTION 1

Introduction

This document presents the findings and conclusions of the Expanded Site Inspection (SI) conducted at Marine Corps Air Station (MCAS) New River Buildings SAS113, AS116, and AS119 and Montford Point Buildings M119 and M315 located on Marine Corps Base Camp Lejeune (MCB CamLej) in Jacksonville, North Carolina. A regional location map of MCB CamLej and its surrounding area is provided as **Figure 1-1**.

The Expanded SI was conducted under the Naval Facilities Engineering Command (NAVFAC), Mid-Atlantic Division, Comprehensive Long-term Environmental Action—Navy (CLEAN) 1000 Contract N62470-08-D-1000, Contract Task Order (CTO) 074. Field investigations were conducted in general accordance with the *Groundwater Sampling and Analysis Plan, Expanded Site Investigation for MCAS New River Buildings SAS113, AS116, and AS119* (CH2M HILL, 2009). That document was prepared in accordance with the Uniform Federal Policy for Sampling and Analysis Plans and is therefore referred to as the UFP-SAP. The UFP-SAP was approved by NAVFAC, MCB CamLej, the United States Environmental Protection Agency (USEPA), and the North Carolina Department of Environment and Natural Resources (NCDENR).

This report is being submitted to the Partnering Team, which includes NAVFAC Mid-Atlantic, MCB CamLej, USEPA, and NCDENR.

1.1 Objectives and Approach

The objectives of the Expanded SI included:

- Collect additional information to confirm the findings of the Preliminary Assessment/Site Inspection (PA/SI) (CH2M HILL, 2006), specifically relating to the presence of metals in groundwater.
- Evaluate the potential human health and ecological risks, if deemed necessary, posed by the site-specific environmental media.
- Document the basis for recommendation of no further action, if appropriate.

The following activities were performed in accordance with methods and procedures detailed in the MCB CamLej Master Project Plans (CH2M HILL, 2008a) (referred to herein as the Master Project Plans) and the UFP-SAP (CH2M HILL, 2009):

- Installation of permanent groundwater monitoring wells within the Surficial Aquifer, and collection of groundwater samples for laboratory analysis.
- Human health and ecological risk screenings.

1.2 Report Organization

The Expanded SI report comprises the following sections:

- Section 1—Introduction
- Section 2—Background
- Section 3—Physical Characteristics
- Section 4—Field Investigation Activities
- Section 5—Investigation Results
- Section 6—Risk Screenings
- Section 7—Conclusions
- Section 8—References

Figures and tables are provided at the end of each section and appendices are provided after Section 8.

\\APHRODITE\PROJ\USNAVFACENGCOM\CAMPLEJEUNE\MAPFILES\CTO_74\EXPANDED_SI\FIGURE_1-1_BASE_LOCATION_MAP.MXD MARTESE

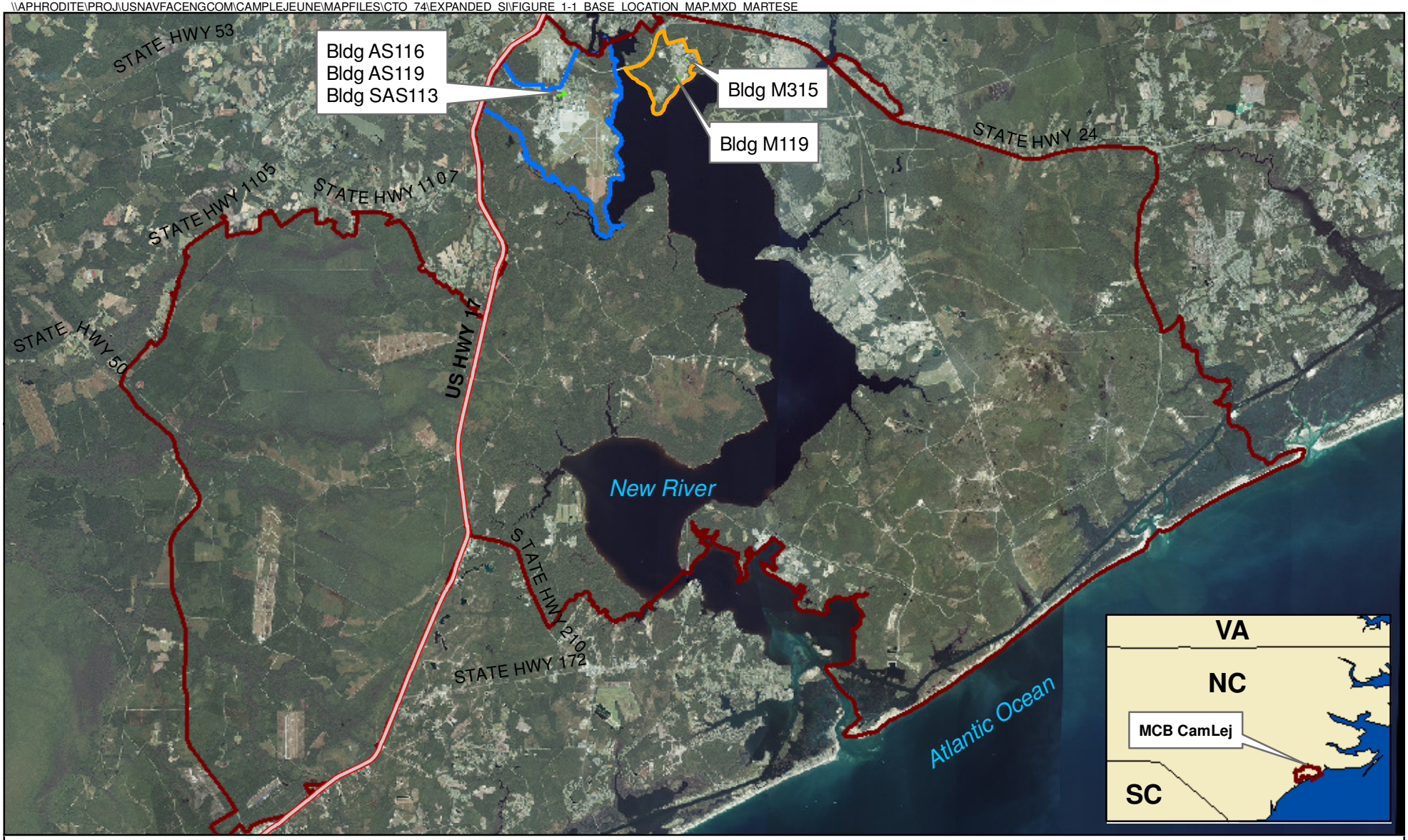

Legend

- Highways
- Installation Boundary
- MCAS New River Boundary
- Montford Point Boundary

N

0 7,500 15,000 30,000 Feet

1 inch = 15,000 feet

Figure 1-1
Base Location
Expanded SI Report
MCB CamLej
North Carolina

CH2MHILL

Generated by: *Brooke Propst/CLT* Checked by: *Chad LeBlanc/BTR*

SECTION 2

Background

2.1 MCB CamLej Setting and History

MCB CamLej encompasses 236 square miles in Onslow County, North Carolina, adjacent to the southern side of the City of Jacksonville. Jacksonville is the largest city near MCB CamLej and contains approximately half of the county's total population. Since 1990, much of MCB CamLej has been part of Jacksonville.

The Base is bisected by the New River, which flows into the Atlantic Ocean in a southeasterly direction. The Base is bordered by the Atlantic Ocean to the east, United States (U.S.) Route 17 to the west, and State Route 24 to the north. The MCB CamLej complex consists of six geographical locations under the jurisdiction of the Base command. These areas include Camp Geiger, Montford Point, Courthouse Bay, Mainside, the Greater Sandy Run Area, and the Rifle Range Area.

MCAS New River encompasses 2,772 acres and is located in the northwestern section of the MCB CamLej complex, approximately 5 miles south of Jacksonville. The MCAS New River includes aircraft operations and maintenance areas, troop housing, and personnel support facilities.

MCB CamLej was placed on the Comprehensive Environmental Response, Compensation, and Liability Act of 1980 (CERCLA) National Priorities List (NPL) effective 4 November 1989. Subsequent to this listing, the USEPA, NCDENR, the United States Department of the Navy (DoN), and the Marine Corps entered into a Federal Facilities Agreement (FFA) for Camp Lejeune. The primary purpose of the FFA was to ensure that environmental impacts associated with past and present activities at the Base are thoroughly investigated and that appropriate CERCLA response and Resource Conservation and Recovery Act (RCRA) corrective action alternatives are developed and implemented, as necessary, to protect public health and welfare and the environment.

2.2 Site History and Previous Investigations

2.2.1 Preliminary Assessment Sites

A PA/SI was conducted by Baker Environmental between 2002 and 2004 to identify sites that may have used, stored, or handled potentially hazardous materials and evaluate potential risks to human health and the environment. A total of 12 sites were identified within Hadnot Point Industrial Area (HPIA), MCAS New River, and Montford Point, as listed below. However, the PA concluded that five of the sites were within the boundaries of ongoing investigations that were being conducted in and around the immediate vicinity under various remedial investigation programs, and no further investigation was recommended.

The five sites recommended for no further action included:

- HPIA:
  - Building HP902
  - Building HP908
  - Building HP1124
- MCAS New River:
  - Building TC830
- Montford Point:
  - Building SM173

The sites recommended for further investigation, included:

- HPIA:
  - Building HP1120
  - Building HP1409
  - Building HP1512
- Montford Point:
  - Building M119
  - Building M315 (added during the SI)
- MCAS New River:
  - Building SAS113
  - Building AS116
  - Building AS119

The field investigation activities consisted of a soil and groundwater investigation, focusing on the areas immediately adjacent to each building. The HPIA field activities were conducted in July 2002, and the MCAS New River and Montford Point field activities took place in June 2004.

Soil and groundwater samples were collected in the immediate vicinity of each building and were analyzed for target compound list (TCL) volatile organic compounds (VOCs), semi-volatile organic compounds (SVOCs), pesticides and polychlorinated biphenyls (PCBs), and target analyte list (TAL) metals. Surface and subsurface soil analytical data were compared to the North Carolina soil-to-groundwater screening levels and two times the mean Base background (Base background) concentrations (for metals only). The groundwater analytical data were compared to the North Carolina Groundwater Quality Standards (NCGWQS), USEPA Region IV Maximum Contaminant Levels (MCLs), and Base background concentrations (for metals only).

HPIA Sites

Building HP1120

Building HP1120 is located between Hammond Road, Birch Street, and Ash Street as shown on **Figure 2-1**. It was constructed as an automobile hobby shop in 1955 with additions to the building constructed in 1964 and 1969. Building HP1120 has historically been used for auto body repair and painting.

During the PA/SI, three surface soil, three subsurface soil, and three groundwater samples were collected in the vicinity of Building HP1120 at the locations shown on **Figure 2-1**. Laboratory analysis detected the presence of only one VOC, tetrachloroethene, at a concentration exceeding the North Carolina soil-to-groundwater screening levels in one surface soil sample. The PA/SI concluded that the tetrachloroethene detection was isolated and did not warrant further investigation. No SVOCs were detected in surface or subsurface soil samples. Two metals, iron and mercury, were detected in two surface soil samples above their respective North Carolina soil-to-groundwater screening levels; however, the concentrations did not exceed two times the Base background (Base background) concentrations. Based on these results, the PA/SI recommended no additional investigation of soil at Building HP1120.

Three VOCs were detected in the groundwater samples collected in the vicinity of HP1120 at concentrations above the North Carolina Groundwater Quality Standards (NCGWQS). Bromodichloromethane and chloroform were detected in all three groundwater samples above the NCGWQS and dibromochloromethane was detected in one groundwater sample above the NCGWQS. The PA/SI concluded that these detections may be attributed to laboratory contamination. Only one metal, iron, was detected above the NCGWQS in one groundwater sample; however, the Base background concentration was not exceeded. Based on these results, the PA/SI recommended no additional investigation of groundwater at Building HP1120.

In summary, the analytical results indicated that there was no impact to the area from past site operations and Building HP1120 requires no further investigation. In October 2002, the Partnering Team concurred with this conclusion.

Building HP1409

Building HP1409 is located on Gibb Road as shown on **Figure 2-1**. The building was constructed in 1943 and was used as the Upholstery and Carpenter shop in the late 1940's. Since that time, Building HP1409 has been used as a classroom, Public Works storage, and a furniture repair shop.

During the PA/SI, three surface soil, three subsurface soil, and three groundwater samples were collected in the vicinity of Building HP1409 at the locations shown on **Figure 2-1**. No VOCs or SVOCs were detected above screening concentrations in surface or subsurface soil samples collected in the vicinity of Building HP1409. Two metals, iron and mercury, were detected in soil samples above the North Carolina soil-to-groundwater screening levels; however, neither iron nor mercury were detected at concentrations exceeding the Base background concentrations. Based on these results, the PA/SI recommended no additional investigation of soil at Building HP1409.

Three VOCs were detected in the groundwater samples collected in the vicinity of Building 1409 at concentrations above NCGWQS. Chloroform was detected in two groundwater samples at concentrations exceeding the NCGWQS and bromodichloromethane and dibromomethane were detected in one groundwater sample above their respective NCGWQS. The PA/SI concluded that these detections may be attributed to laboratory contamination. Two metals, iron and manganese, were detected in groundwater samples at concentrations above the NCGWQS concentrations; however, the Base background concentrations were not exceeded.

In summary, the analytical results indicated that there was no impact to the area from past site operations and Building HP1409 requires no further investigation. In October 2002, the Partnering Team concurred with this conclusion.

Building HP1512

Building HP1512 was historically located between Buildings HP1504 and HP1503 on Hammond Road as shown on **Figure 2-1**. The operational history of the building is unknown; however, it is assumed that it was used as an automotive repair support structure for the series of vehicle maintenance buildings in the surrounding area. Building HP1512 is no longer present. The date of demolition is unknown.

During the PA/SI, six subsurface soil and three groundwater samples were collected in the vicinity of Building HP1512 at the locations shown on **Figure 2-1**. No VOCs or SVOCs were detected above screening concentrations in subsurface soil samples collected in the vicinity of Building HP1512. Five metals, including barium, calcium, iron, lead, and mercury, were detected in subsurface soil samples above the North Carolina soil-to-groundwater screening levels; however, none were detected at concentrations exceeding the Base background concentrations.

Three VOCs were detected in the groundwater samples collected in the vicinity of Building HP1512 at concentrations above NCGWQS. Chloroform was detected above the NCGWQS in all three groundwater samples, bromodichloromethane was detected in two groundwater samples above the NCGWQS, and dibromochlormethane was detected above the NCGWQS in one groundwater sample. The PA/SI concluded that these detections may be attributed to laboratory contamination. Four metals, arsenic, chromium, iron, and lead) were detected in one groundwater sample at concentrations that exceeded their respective NCGWQS; however, the Base background concentrations were not exceeded.

In summary, the analytical results indicated that there was no impact to the area from past site operations and Building HP1512 requires no further investigation. In October 2002, the Partnering Team concurred with this conclusion.

Montford Point Sites

Building M119

Building M119 is located at the intersection Landing Road and Wilson Drive in the Montford Point area of MCB CamLej. The building was constructed in 1943 as a gun shed and the types of guns stored were most likely Howitzers. Since that time, the building has been renovated for use as a classroom and vehicle repair shop.

During the PA/SI, four surface soil and four groundwater samples were collected in the vicinity of Building M119 at the locations shown on **Figure 2-2**.No VOCs, SVOCs, pesticides, or PCBs were detected above the North Carolina soil-to-groundwater screening levels in the soil samples collected in the vicinity of Building M119. One metal, iron, was detected at concentrations exceeding the North Carolina soil-to-groundwater screening level (151 mg/kg) in all four surface soil samples, ranging from 977 mg/kg to 2,260 mg/kg. However, the Base background concentration (3,245 mg/kg) was not exceeded. Soil analytical data for Building M119 is shown on **Figure 2-2**.

No VOCs, SVOCs, or PCBs were detected above NCGWQS in the groundwater samples collected in the vicinity of Building M119. Two metals, iron and manganese, were detected in groundwater samples collected from wells installed in the vicinity of Building M119 at concentrations that exceeded their respective NCGWQS. Iron was detected in all four groundwater samples at concentrations ranging from 1,610 µg/L to 8,720 µg/L, all of which exceeded the NCGQWS (300 µg/L). Of these, the Base background concentration (5,999 µg/L) was exceeded in only one of the groundwater samples. Manganese was detected in groundwater samples at concentrations ranging from 19.8 µg/L to 74.8 µg/L. The NCGWQS (50 µg/L) was exceeded in only one groundwater sample. All manganese detections were below the Base background concentration (214 µg/L). Groundwater analytical data for Building M119 is shown on **Figure 2-2**.

The PA/SI recommended further investigation of metals in groundwater at Building M119. Upon further review by the Partnering Team in April 2009, it was determined that the isolated detection of iron in groundwater did not warrant additional investigation.

Building M315

Building M315 was not initially evaluated as part of the PA; however, it was thought to be a former dry cleaning facility and was added to the investigation by the Partnering Team in April 2004. No records were located that indicated past dry cleaner operations. Rather, the building was used as a laundry pick-up facility until the 1980's.

During the PA/SI, four surface soil and four groundwater samples were collected in the vicinity of Building M315 at the locations shown on **Figure 2-2**.No VOCs, SVOCs, pesticides, or PCBs were detected above the North Carolina soil-to-groundwater screening levels in surface soil samples collected in the vicinity of Building M315. One metal, iron, was detected at concentrations exceeding North Carolina soil-to-groundwater screening levels. Iron was detected in all four surface soil samples at concentrations ranging from 667 mg/kg to 1,830 mg/kg, which exceeded the North Carolina soil-to-groundwater screening level (151 mg/kg). However, the concentrations did not exceed the Base background concentration (3,245 mg/kg). Soil analytical data for Building M315 is shown on **Figure 2-2**.

No VOCs, pesticides, or PCBs were detected at concentrations above NCGWQS in groundwater samples collected in the vicinity of Building M315. One SVOC, bis(2-ethylhexyl)phthalate, was detected in groundwater at a concentration of 4 µg/L, slightly exceeding the NCGWQS (2.5 µg/L). The PA/SI concluded that this isolated exceedance did not warrant additional investigation. Iron was detected in all four groundwater samples at concentrations exceeding the NCGWQS (300 µg/L), ranging from 1,500 µg/L to 9,820 µg/L. Of these, only one groundwater sample exceeded the Base background concentration (5,999 µg/L). Lead was detected at concentrations exceeding Base background concentration

(2.8 µg/L) in two groundwater samples at 3.3 µg/L and 16.7 µg/L. Of these, only one of the samples exceeded the NCGWQS (15 µg/L). Groundwater analytical data for Building M315 is shown on **Figure 2-2**.

The PA/SI recommended further investigation of metals in groundwater at Building M315. Upon further review by the Partnering Team in 2009, it was determined that the isolated detections of iron and lead in groundwater at did not warrant additional investigation.

MCAS New River Sites

Building SAS113

Building SAS113 is located 100 feet (ft) west of Bancroft Road and consists of a covered four-bay open metal structure, constructed on a 6-inch thick slab (**Figure 2-3**). Adjacent areas include other buildings and paved areas.

Building SAS113 was constructed in 1986 as a vehicle support area when surrounding Buildings AS114, AS116, and AS118 were converted into automotive hobby shops. A new automotive hobby shop opened at MCAS New River in 2009 and Building SAS113 is no longer actively used.

During the PA/SI, four surface soil and four groundwater samples were collected from the vicinity of Building SAS113 at the locations shown on **Figure 2-3**. Laboratory analysis detected the presence of three VOCs and four pesticides in the surface soil samples; however, none were detected at concentrations exceeding the North Carolina soil-to-groundwater screening level. A total of 14 metals were detected in the surface soil samples; only iron exceeded the North Carolina soil-to-groundwater screening level and none of the detected metals concentrations exceeded the Base background concentrations for soil. Soil analytical data for Building SAS113 is shown on **Figure 2-3**. Based on these results, the PA/SI recommended no additional investigation of soil at Building SAS113.

Carbon disulfide and caprolactam were detected in groundwater samples collected in the vicinity of Building SAS113 at concentrations less than the NCGWQS. One pesticide, beta-benzene hexachloride (beta-BHC), was detected in one groundwater sample at a concentration of 0.028 micrograms per liter (µg/L), exceeding the NCGWQS of 0.019 µg/L. The Partnering Team concluded that this detection was associated with typical pesticide use around the buildings and did not warrant further investigation. The Partnering Team also concluded that no additional investigation was necessary for VOCs, SVOCs, pesticides, or PCBs in groundwater.

Seventeen metals were detected in groundwater samples collected in the vicinity of Building SAS113. Five metals (arsenic, chromium, iron, lead, and manganese) were detected at concentrations exceeding the NCGWQS. Chromium, iron, and lead were also among the 11 metals that were detected at concentrations exceeding the Base background concentrations. Groundwater analytical data for Building SAS113 is shown on **Figure 2-3**.

The PA/SI recommended further investigation of metals in groundwater. However, because the groundwater samples were collected via direct-push technology (DPT) and potentially contained suspended solids, it was uncertain that these metals results were representative of groundwater conditions at Building SAS113. Permanent monitoring wells were installed

and sampled during this Expanded SI to confirm that the elevated concentrations detected during the PA/SI were the result of the sampling technique.

Building AS116

MCAS New River Building AS116 is a one-story metal frame building attached to a brick building on Bancroft Street (**Figure 2-3**). Fencing surrounds the building, with access from Bancroft Street only. Adjacent areas include other buildings and pavement.

Building AS116 was constructed to replace a temporary wooden building in 1954 and to provide the MCAS New River with vehicle maintenance facilities. From 1979 to 1981, Building AS116 served as a hazardous materials and flammables storage area. In the early 1980s, a new complex was constructed for the Combat Vehicle Maintenance Shop, and Building AS116 was converted into an automotive hobby shop along with Buildings SAS113 and AS114. A new automotive hobby shop was opened at the MCAS New River in 2009, and Building AS116 has since been used as a storage facility for Marine Corps Community Services (MCCS).

Four surface soil samples and four groundwater samples were collected in the vicinity of Building AS116 during the PA/SI (**Figure 2-3**). Two VOCs, two SVOCs, and eight pesticides were detected in surface soil samples; however, none of these analytes were detected at concentrations exceeding the North Carolina soil-to-groundwater screening levels. Thirteen metals were detected in surface soil samples collected in the vicinity of Building AS116. Iron was the only metal detected at a concentration exceeding the North Carolina soil-to-groundwater screening level, and no metals exceeded the Base background criteria. Soil analytical data for Building AS116 is shown on **Figure 2-3**. Based on these results, the PA/SI recommended no additional investigation of soil at Building AS116.

Four VOCs and three SVOCs were detected in the groundwater samples collected from sample locations IS01, IS02, and IS03 in the vicinity of Building AS116. None of the detected VOCs exceeded the NCGWQS. Two of the SVOCs, bis (2-ethylhexyl) phthalate (BEHP) and pentachlorophenol, were detected at concentrations exceeding the NCGWQS of 2.5 µg/L and 0.29 µg/L, respectively. BEHP, a common laboratory artifact, and pentachlorophenol were detected at 11 µg/L and 7 µg/L, respectively. It was agreed by the Partnering Team that since pentachlorophenol was reported in only one sample and BEHP is a common laboratory artifact, SVOC results were likely attributable to laboratory-derived contamination and were not indicative of ambient groundwater conditions at Building AS116. The PA/SI report concluded that no further groundwater investigation was necessary for VOCs, SVOCs, pesticides, or PCBs at Building AS116.

Four metals (arsenic, chromium, iron, and lead) were detected in groundwater samples collected in the vicinity of Building AS116, at concentrations exceeding their respective NCGWQS. Arsenic, chromium, iron, and lead were also among the 15 metals that were detected at concentrations exceeding the Base background concentrations. Groundwater analytical data for Building AS116 is shown on **Figure 2-3**. The PA/SI recommended further investigation of metals in groundwater at Building AS116. Because the groundwater samples were collected via DPT and potentially contained suspended solids, it was uncertain that these metals results were representative of groundwater conditions at Building AS116. Permanent monitoring wells were installed and sampled during this

Expanded SI to confirm that the elevated concentrations detected during the PA/SI were the result of the sampling technique.

Building AS119

Building AS119 is a single-story metal frame building located approximately 200 ft east of White Street (**Figure 2-3**). Adjacent areas include grass, pavement, and other buildings.

Building AS119 was constructed in 1963 as an automotive vehicle maintenance facility with parts storage, service bays, and exterior service or wash rack. Records indicate that during remodeling work performed in 1988, a number of structures, including a boiler and plumbing fixtures, were removed from the building. An existing oil heater and associated piping and valves were replaced and a new fuel oil AST was installed. Currently, the building is used as a storage and vehicle maintenance facility.

Four surface soil samples and four groundwater samples were collected in the vicinity of Building AS119 during the PA/SI field events (**Figure 2-3**). Three VOCs were detected in soil samples (IS03 and IS04) collected in the vicinity of Building AS119; however, none were detected at concentrations exceeding the North Carolina soil-to-groundwater screening levels. Fourteen SVOCs were detected in soil samples collected in the vicinity of Building AS119. Of these, benz(a)anthracene was detected in only one sample (IS02) above the North Carolina soil-to-groundwater screening level. Nine pesticides were detected in soil in the vicinity of Building AS119; however, none were detected at a concentration exceeding the North Carolina soil-to-groundwater screening levels. Sixteen metals were detected in surface soil samples collected in the vicinity of Building AS119. Iron was the only metal that was detected at concentrations exceeding the North Carolina soil-to-groundwater screening levels. No metals were detected at concentrations exceeding both North Carolina soil-to-groundwater screening levels and Base background concentrations. Soil analytical data for Building AS119 is shown on **Figure 2-3**.The PA/SI recommended additional investigation of SVOCs, pesticides, and metals in soil. Upon further review of the data, the Partnering Team concluded in April 2009 that because the SVOC detection in soil was isolated and no metals were detected at concentrations exceeding both North Carolina soil-to-groundwater screening levels and Base background concentrations, no further investigation of soil was necessary at Building AS119.

Three VOCs were detected in groundwater samples collected at Building AS119; however, none were detected at concentrations exceeding the NCGWQS. One SVOC, BEHP, was detected in one groundwater sample above the NCGWQS. As previously noted, BEHP is a common laboratory contaminant. Two pesticides, beta-BHC and delta-BHC, were detected in the groundwater samples collected in the vicinity of Building AS119, at concentrations of 0.019 µg/L and 0.014 µg/L, respectively; the former is equal to the NCGWQS for total BHC (0.019 µg/L). These detections were consistent with typical pesticide use around buildings. Based on the groundwater analytical data, the PA/SI recommended that no additional investigation was necessary for VOCs, SVOCs, pesticides, or PCBs in groundwater.

Five metals were detected in groundwater at concentrations exceeding the NCGWQS, including arsenic, chromium, iron, lead, and manganese. Arsenic, chromium, iron, and lead were also detected at concentrations exceeding the Base background concentrations. Groundwater analytical data for Building AS119 is shown on **Figure 2-3**.Based on the

analytical results, the PA/SI recommended further investigation of metals in groundwater at Building AS119. However, because the groundwater samples were collected via DPT and potentially contained suspended solids, it is uncertain that these metals results are representative of groundwater conditions at Building AS119. Permanent monitoring wells were installed and sampled during this Expanded SI to confirm that the elevated concentrations detected during the PA/SI were the result of the sampling technique.

2.2.2 SWMU Investigations

Two solid waste management unit (SWMU) sites (SWMU 299 and SWMU 475) are located in the immediate vicinity of Building AS116, as shown on **Figure 2-4**. SWMU 475 is also located approximately 200 ft north and upgradient of Building AS119.

SWMU 299 was an aboveground storage tank (AST) that was used to store used oil from a nearby hobby shop, and was replaced in 2005. A Phase I Confirmatory Site Investigation (CSI) (Baker, 2001) was conducted in September 1997 to evaluate if operation of the AST had impacted surface and subsurface soil. Petroleum-based compounds commonly found in fuel and motor oil were detected in surface and subsurface soil samples. A Phase II CSI was conducted in 2002 (Baker, 2005) to assess potential impacts to groundwater and to further evaluate impacts to soil. Arsenic, chromium, and lead were detected in groundwater samples collected from permanent monitoring wells in the vicinity of the AST. Chromium was the only metal detected in groundwater samples at a concentration above the Base background concentration. **Figure 2-4** illustrates the sample locations used during the Phase I and Phase II CSI field investigation activities. Results of the CSIs identified potential unacceptable risk associated with future residential use of groundwater based on naphthalene concentrations. SWMU 299 is currently included in the RCRA long-term monitoring (LTM) program to monitor naphthalene concentrations in groundwater and land use controls (LUCs) are in-place to restrict groundwater use until concentrations decrease.

SWMU 475 consists of buried debris and stained soils identified during expansion of the water treatment plant in 2006. The debris consisted of metal shelving and oil drain pans. The debris was removed and soil samples were collected from the excavation area by the construction contractor.

In 2007, a RCRA Facility Investigation (RFI) was conducted to evaluate potential impacts to soil and groundwater in the vicinity of the site (CH2M HILL, 2008b). **Figure 2-4** illustrates the sample locations associated with the RFI field activities. Arsenic, chromium, and lead were detected in groundwater samples; however, only lead was detected at a concentration exceeding both the Base background concentration and the NCGWQS, at sample location SWMU 475-MW03. No potential risks were identified for industrial use; however, a potential risk to future residents was identified as a result of exposure to polycyclic aromatic hydrocarbons.

\\APHRODITE\PROJ\USNAVFACENGCOM\CAMPLEJEUNE\MAPFILES\CTO_74\EXPANDED_SI\Figure_2_1_HPIA_PA_SI_Samp_Locs.mxd

Legend

- Historical Sample Locations
- Buildings 1120, 1409, and Former Building 1512

N

0 150 300 600 Feet

1 inch = 300 feet

Figure 2-1
HPIA PA/SI Sample Locations
Expanded SI Report
MCB CamLej
North Carolina

CH2MHILL

Generated by: *Brooke Propst/CLT* Checked by: *Chad LeBlanc/BTR*

\\APHRODITE\PROJ\USNAVFACENGCOM\CAMPLEJEUNE\MAPFILES\CTO_74\EXPANDED_SI\Figure_2_2_Montford_Pt_PA_SI_Exceedances.mxd

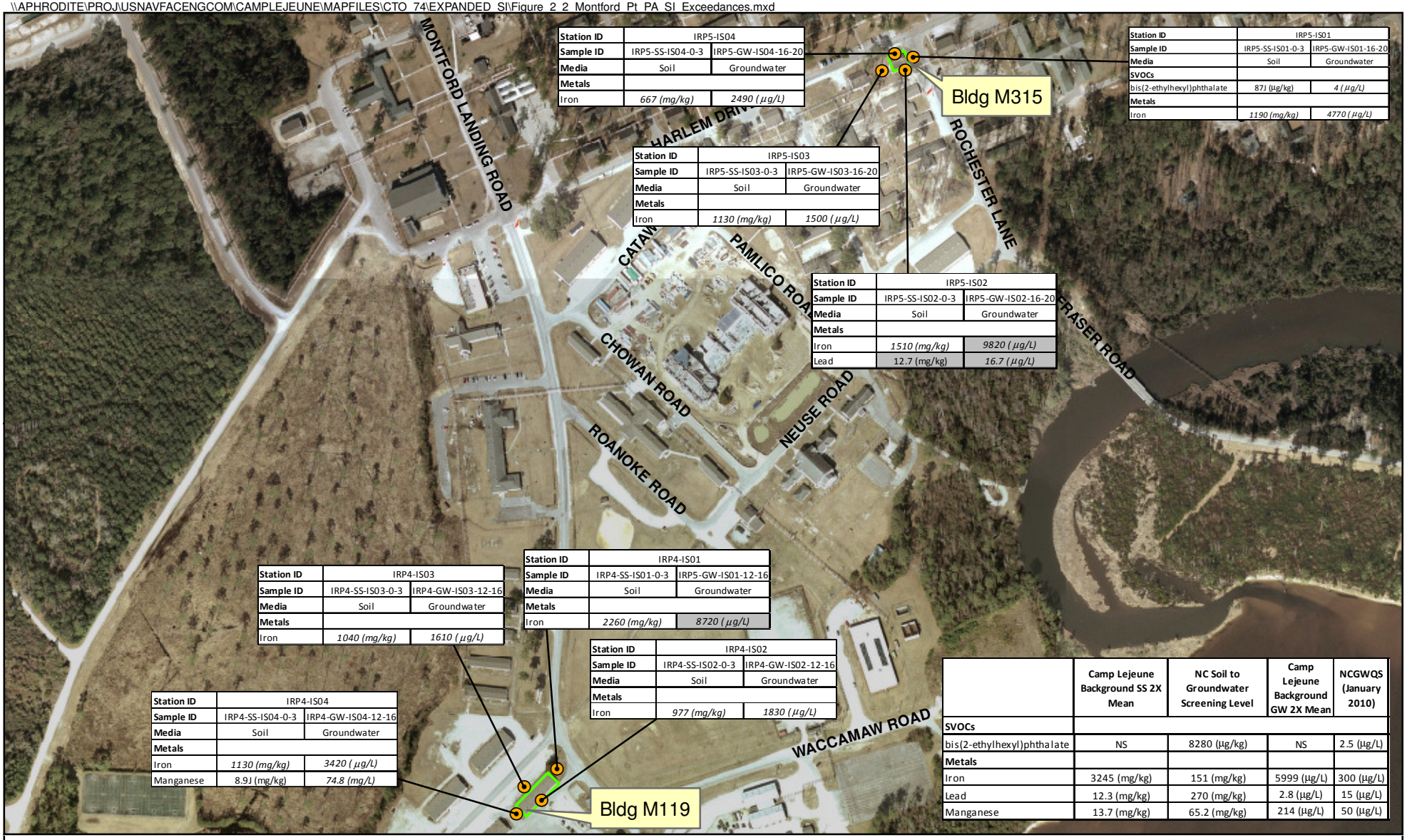

Station ID	IRP5-IS04	
Sample ID	IRP5-SS-IS04-0-3	IRP5-GW-IS04-16-20
Media	Soil	Groundwater
Metals		
Iron	*667 (mg/kg)*	*2490 (µg/L)*

Station ID	IRP5-IS01	
Sample ID	IRP5-SS-IS01-0-3	IRP5-GW-IS01-16-20
Media	Soil	Groundwater
SVOCs		
bis(2-ethylhexyl)phthalate	87J (µg/kg)	*4 (µg/L)*
Metals		
Iron	*1190 (mg/kg)*	*4770 (µg/L)*

Station ID	IRP5-IS03	
Sample ID	IRP5-SS-IS03-0-3	IRP5-GW-IS03-16-20
Media	Soil	Groundwater
Metals		
Iron	*1130 (mg/kg)*	*1500 (µg/L)*

Station ID	IRP5-IS02	
Sample ID	IRP5-SS-IS02-0-3	IRP5-GW-IS02-16-20
Media	Soil	Groundwater
Metals		
Iron	*1510 (mg/kg)*	*9820 (µg/L)*
Lead	12.7 (mg/kg)	*16.7 (µg/L)*

Station ID	IRP4-IS03	
Sample ID	IRP4-SS-IS03-0-3	IRP4-GW-IS03-12-16
Media	Soil	Groundwater
Metals		
Iron	*1040 (mg/kg)*	*1610 (µg/L)*

Station ID	IRP4-IS01	
Sample ID	IRP4-SS-IS01-0-3	IRP5-GW-IS01-12-16
Media	Soil	Groundwater
Metals		
Iron	*2260 (mg/kg)*	*8720 (µg/L)*

Station ID	IRP4-IS02	
Sample ID	IRP4-SS-IS02-0-3	IRP4-GW-IS02-12-16
Media	Soil	Groundwater
Metals		
Iron	*977 (mg/kg)*	*1830 (µg/L)*

Station ID	IRP4-IS04	
Sample ID	IRP4-SS-IS04-0-3	IRP4-GW-IS04-12-16
Media	Soil	Groundwater
Metals		
Iron	*1130 (mg/kg)*	*3420 (µg/L)*
Manganese	8.9J (mg/kg)	*74.8 (mg/L)*

	Camp Lejeune Background SS 2X Mean	NC Soil to Groundwater Screening Level	Camp Lejeune Background GW 2X Mean	NCGWQS (January 2010)
SVOCs				
bis(2-ethylhexyl)phthalate	NS	8280 (µg/kg)	NS	2.5 (µg/L)
Metals				
Iron	3245 (mg/kg)	151 (mg/kg)	5999 (µg/L)	300 (µg/L)
Lead	12.3 (mg/kg)	270 (mg/kg)	2.8 (µg/L)	15 (µg/L)
Manganese	13.7 (mg/kg)	65.2 (mg/kg)	214 (µg/L)	50 (µg/L)

Legend

- Historical Sample Locations
- Buildings M119 and M315

Notes:
Shading indicates exceedance of two times the mean base background concentration for Soil and Groundwater
Italics indicates exceedance of NC Soil-to-Groundwater screening level for soils or NCGWQS for groundwater
NS - No Standard
µg/l - Micrograms per liter
µg/kg - Micrograms per kilogram
mg/kg - Millligrams per kilogram

N

0 200 400 800 Feet

1 inch = 400 feet

Figure 2-2
Montford Point PA/SI Exceedances
Expanded SI Report
MCB CamLej
North Carolina

CH2MHILL

Generated by: *Brooke Propst/CLT* Checked by: *Chad LeBlanc/BTR*

\\APHRODITE\PROJ\USNAVFACENGCOM\CAMPLEJEUNE\MAPFILES\CTO_74\EXPANDED_SI\Figure_2_3_MCAS_New_River_PA_SI_Exceedances.mxd

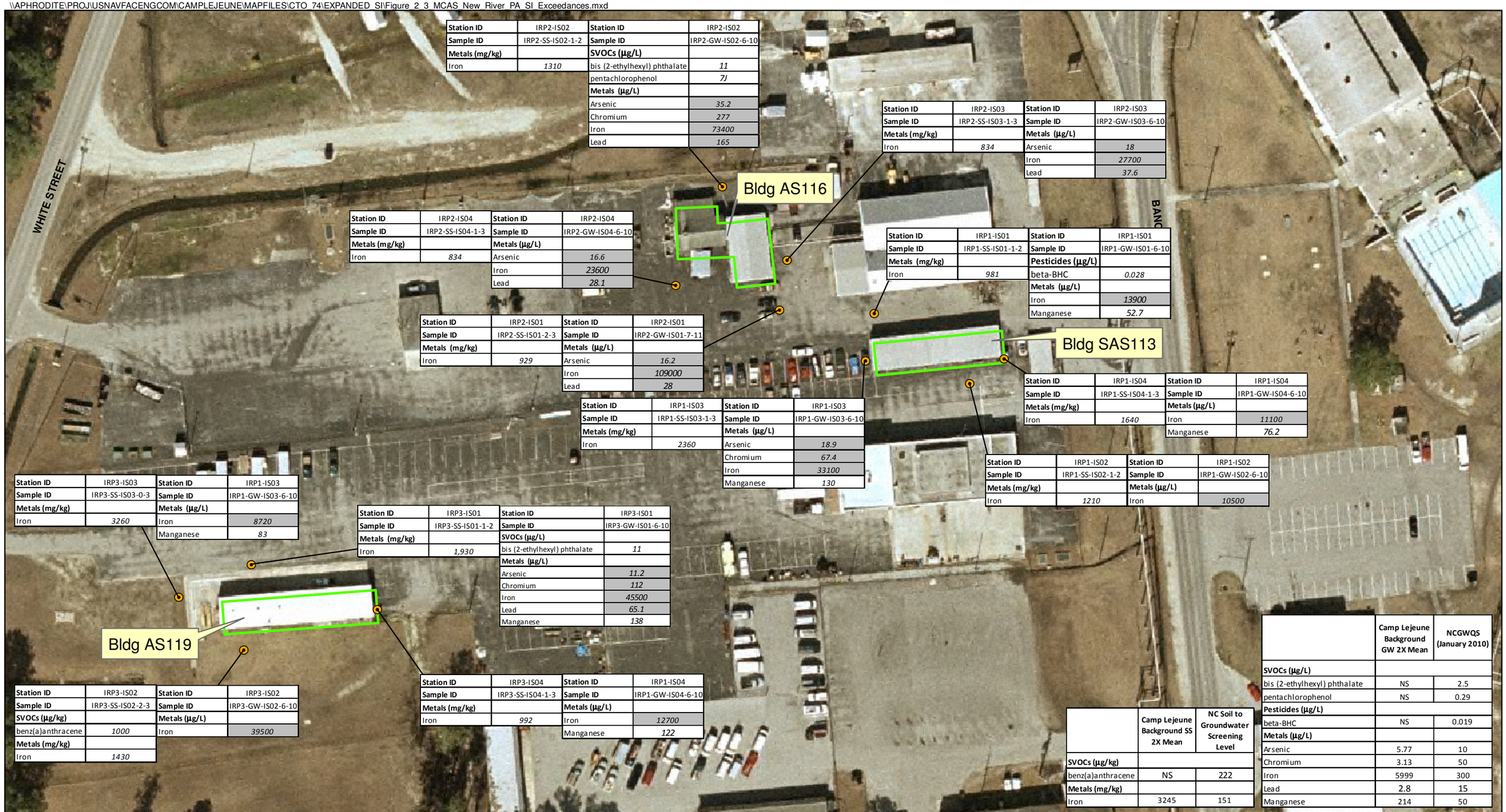

Station ID	IRP2-IS02
Sample ID	IRP2-SS-IS02-1-2
Metals (mg/kg)	
Iron	*1310*

Station ID	IRP2-IS02
Sample ID	IRP2-GW-IS02-6-10
SVOCs (µg/L)	
bis (2-ethylhexyl) phthalate	*11*
pentachlorophenol	*7J*
Metals (µg/L)	
Arsenic	*35.2*
Chromium	*277*
Iron	*73400*
Lead	*165*

Station ID	IRP2-IS03
Sample ID	IRP2-SS-IS03-1-3
Metals (mg/kg)	
Iron	*834*

Station ID	IRP2-IS03
Sample ID	IRP2-GW-IS03-6-10
Metals (µg/L)	
Arsenic	*18*
Iron	*27700*
Lead	*37.6*

Station ID	IRP2-IS04
Sample ID	IRP2-SS-IS04-1-3
Metals (mg/kg)	
Iron	*834*

Station ID	IRP2-IS04
Sample ID	IRP2-GW-IS04-6-10
Metals (µg/L)	
Arsenic	*16.6*
Iron	*23600*
Lead	*28.1*

Station ID	IRP1-IS01
Sample ID	IRP1-SS-IS01-1-2
Metals (mg/kg)	
Iron	*981*

Station ID	IRP1-IS01
Sample ID	IRP1-GW-IS01-6-10
Pesticides (µg/L)	
beta-BHC	*0.028*
Metals (µg/L)	
Iron	*13900*
Manganese	*52.7*

Station ID	IRP2-IS01
Sample ID	IRP2-SS-IS01-2-3
Metals (mg/kg)	
Iron	*929*

Station ID	IRP2-IS01
Sample ID	IRP2-GW-IS01-7-11
Metals (µg/L)	
Arsenic	*16.2*
Iron	*109000*
Lead	*28*

Station ID	IRP1-IS04
Sample ID	IRP1-SS-IS04-1-3
Metals (mg/kg)	
Iron	*1640*

Station ID	IRP1-IS04
Sample ID	IRP1-GW-IS04-6-10
Metals (µg/L)	
Iron	*11100*
Manganese	*76.2*

Station ID	IRP1-IS03
Sample ID	IRP1-SS-IS03-1-3
Metals (mg/kg)	
Iron	*2360*

Station ID	IRP1-IS03
Sample ID	IRP1-GW-IS03-6-10
Metals (µg/L)	
Arsenic	*18.9*
Chromium	*67.4*
Iron	*33100*
Manganese	*130*

Station ID	IRP1-IS02
Sample ID	IRP1-SS-IS02-1-2
Metals (mg/kg)	
Iron	*1210*

Station ID	IRP1-IS02
Sample ID	IRP1-GW-IS02-6-10
Metals (µg/L)	
Iron	*10500*

Station ID	IRP3-IS03
Sample ID	IRP3-SS-IS03-0-3
Metals (mg/kg)	
Iron	*3260*

Station ID	IRP1-IS03
Sample ID	IRP1-GW-IS03-6-10
Metals (µg/L)	
Iron	*8720*
Manganese	*83*

Station ID	IRP3-IS01
Sample ID	IRP3-SS-IS01-1-2
Metals (mg/kg)	
Iron	*1,930*

Station ID	IRP3-IS01
Sample ID	IRP3-GW-IS01-6-10
SVOCs (µg/L)	
bis (2-ethylhexyl) phthalate	*11*
Metals (µg/L)	
Arsenic	*11.2*
Chromium	*112*
Iron	*45500*
Lead	*65.1*
Manganese	*138*

Station ID	IRP3-IS02
Sample ID	IRP3-SS-IS02-2-3
SVOCs (µg/kg)	
benz(a)anthracene	*1000*
Metals (mg/kg)	
Iron	*1430*

Station ID	IRP3-IS02
Sample ID	IRP3-GW-IS02-6-10
Metals (µg/L)	
Iron	*39500*

Station ID	IRP3-IS04
Sample ID	IRP3-SS-IS04-1-3
Metals (mg/kg)	
Iron	*992*

Station ID	IRP1-IS04
Sample ID	IRP1-GW-IS04-6-10
Metals (µg/L)	
Iron	*12700*
Manganese	*122*

	Camp Lejeune Background SS 2X Mean	NC Soil to Groundwater Screening Level
SVOCs (µg/kg)		
benz(a)anthracene	NS	222
Metals (mg/kg)		
Iron	3245	151

	Camp Lejeune Background GW 2X Mean	NCGWQS (January 2010)
SVOCs (µg/L)		
bis (2-ethylhexyl) phthalate	NS	2.5
pentachlorophenol	NS	0.29
Pesticides (µg/L)		
beta-BHC	NS	0.019
Metals (µg/L)		
Arsenic	5.77	10
Chromium	3.13	50
Iron	5999	300
Lead	2.8	15
Manganese	214	50

Legend

- Soil and Groudwater Sample Location
- Stream
- PA/SI Sites

Notes:
Shading indicates exceedance of two times the mean base background concentration for Soil and Groundwater
Italics indicates exceedance of NC Soil-to-Groundwater screening level for soils or NCGWQS for groundwater
NS - No Standard
µg/l - Micrograms per liter
mg/kg - Milligrams per kilogram
J - Analyte present, value may or may not be accurate or precise

N

0 37.5 75 150 Feet

1 inch = 75 feet

Figure 2-3
MCAS New River PA/SI Exceedances
Expanded SI Report
MCB CamLej
North Carolina

CH2MHILL

Generated by: *Brooke Propst/CLT* Checked by: *Chad LeBlanc/BTR*

\\APHRODITE\PROJ\USNAVFACENGCOM\CAMPLEJEUNE\MAPFILES\CTO_74\EXPANDED_SI\Figure_2_4_MCAS_New_River_Historic_Samp_Loc.mxd

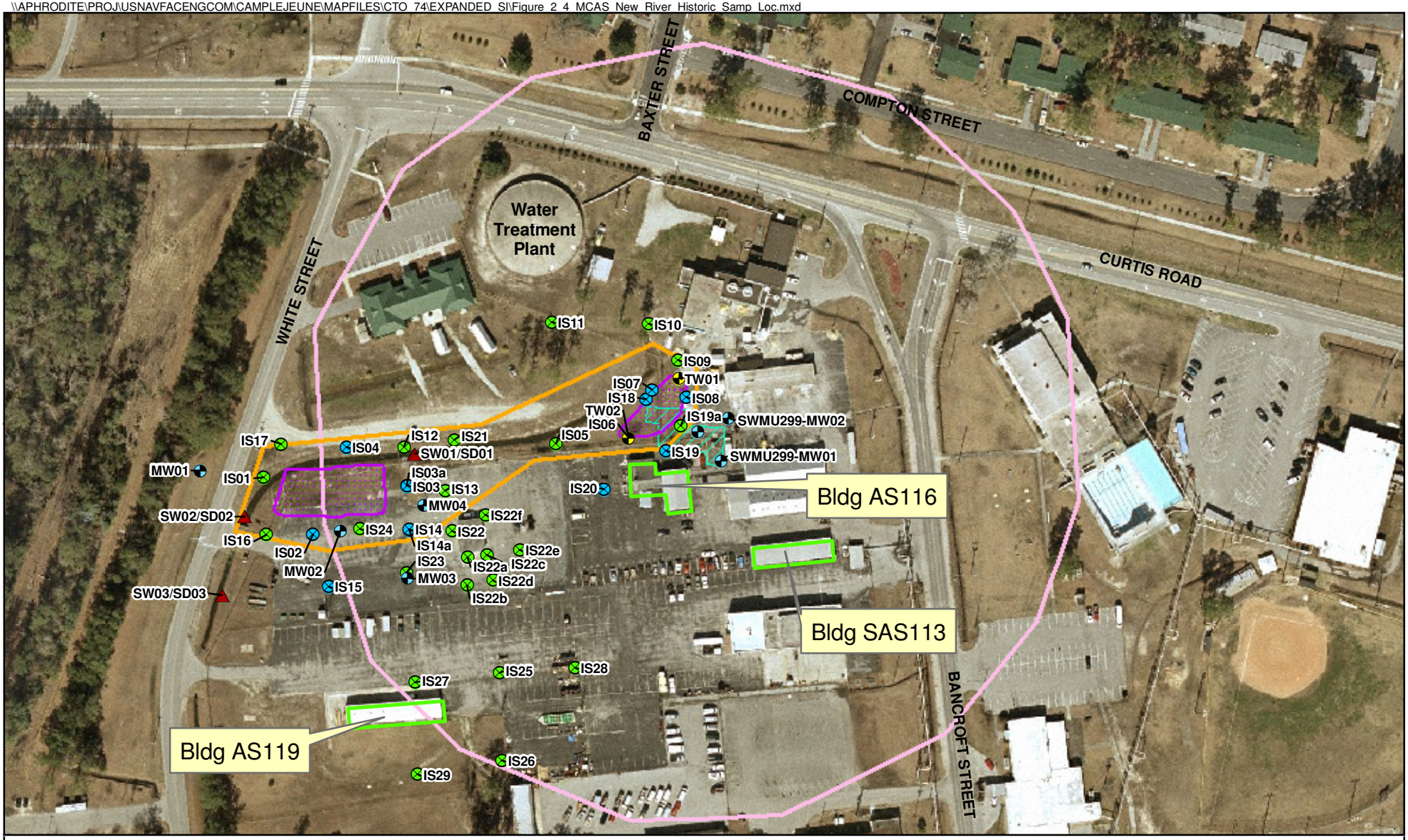

Legend

- DPT Soil Sample
- DPT Soil and Groundwater Sample
- Monitoring Well Groundwater Sample
- Temporary Well Groundwater Sample
- Surface Water and Sediment Sample
- PA/SI Sites
- Approximate 2006 SWMU 475 Soil Removal Areas
- SWMU 299 Interim Soil Removal Area
- SWMU 475 Boundary
- SWMU 299 Aquifer Use Control Boundary (500 ft)

N

0 87.5 175 350 Feet

1 inch = 175 feet

Figure 2-4
MCAS New River Historical Sample Locations
Expanded SI Report
MCB CamLej
North Carolina

CH2MHILL

Generated by: *Brooke Propst/CLT* Checked by: *Chad LeBlanc/BTR*

SECTION 3

Physical Characteristics

3.1 Physical Setting and Regional Hydrogeology

The following sections describe the physical characteristics and regional hydrogeology of MCB CamLej and the MCAS New River buildings.

3.1.1 Regional and Facility-wide Physiography, Climate, and Surface Water Hydrology

MCB CamLej lies within the Tidewater region of the Atlantic Coastal Plain Physiographic Province in North Carolina. This physiographic province stretches from Georgia to Long Island, New York. The Tidewater region is generally swampy and of low relief, with elevations averaging roughly 20 ft above mean sea level (msl). The physiography of the area is typical of the Atlantic Coastal Plain with stepped terraces consisting of wide, gently eastward-sloping plains separated by linear, steeper, northward- and eastward-facing scarps (**Figure 3-1**). The topography is characterized by low elevations and relatively low relief across MCB CamLej and the general vicinity of the MCAS New River buildings (**Figure 3-2**). The surface elevations range from sea level to approximately 70 ft above msl, with the majority of MCB CamLej ranging from 20 to 40 ft above msl. The relief between stream and interstream areas typically ranges from 20 to 30 ft. The New River and its tributaries bisect the Base in a northwest to southeast alignment.

Climatic conditions in southeastern North Carolina and at MCB CamLej are generally characterized by mild winters and hot, humid summers. Average annual precipitation in the area is approximately 50 inches. The average ambient air temperature is 63 degrees Fahrenheit (°F) (U.S. Department of Agriculture, 2002).

3.1.2 Site Topography, Drainage, and Surface Features

The areas around Buildings SAS113, AS116, and AS119 are generally developed with industrial buildings, parking lots, and landscaped grassy areas. The buildings are situated at an elevation of approximately 15 ft above msl, as shown on **Figure 3-2**. A storm water drain is located approximately 20 ft west of Building AS119. Surface water runoff in the vicinity of Buildings SAS113 and AS116 generally flows to the east toward a drainage ditch adjacent to Bancroft Street. Surface water was not encountered at any of the buildings. The nearest surface water body, Strawhorn Creek, is located approximately 400 feet northeast of the MCAS New River buildings.

3.2 Geology and Hydrogeology

3.2.1 General Regional Geologic and Hydrogeologic Framework

MCB CamLej is underlain by an eastward-thickening sediment wedge of marine and non-marine origins ranging in age from early Cretaceous to Holocene. The wedge of sediment

begins at the western boundary of the Atlantic Coastal Plain Physiographic Province, known as the Fall Line, and dips southeastward toward the coast. Along the coastline, several thousands of feet of interlayered, unconsolidated sediments are present, consisting of gravel, sand, silt, clay deposits, calcareous clays, shell beds, sandstone, and limestone that were deposited over pre-Cretaceous crystalline basement rock. Within the MCB CamLej area, approximately 1,500 ft of a sedimentary sequence overlie the crystalline basement rock. This sedimentary sequence includes seven aquifers and their associated confining units (less permeable beds of clay and silt) including the Surficial, Castle Hayne, Beaufort, Peedee, Black Creek, and Upper and Lower Cape Fear Aquifers, shown in **Table 3-1** (Cardinell, Berg, and Lloyd, 1993). Three of the upper Tertiary Formations (Yorktown, Eastover, and Pungo River) shown on **Table 3-1** are not present in the vicinity of MCB CamLej.

Interstream areas generally provide the recharge for aquifers within the Coastal Plain region and have been estimated to have a yearly range of 5 to 21 inches of rainfall (Heath, 1989). In general, natural discharge of groundwater from the Coastal Plain aquifer system is into streams, swamps, and lakes. Evapotranspiration from the vadose zone and upward leakage through confining units into streams, estuaries, swamps, and even the ocean also contribute to groundwater discharge. Within the vicinity of MCB CamLej, the New River estuary serves as the principal discharge area for groundwater from the Castle Hayne Aquifer (Harned et al., 1989).

3.2.2 Site-Specific Geologic and Hydrogeologic Framework

Site Geology

Information regarding the site-specific geology was derived from the soil samples collected during installation of nine monitoring wells to approximately 12 ft below ground surface (bgs) in August 2009 during the Expanded SI field activities. Within the vicinity of Buildings SAS113, AS116, and AS119, the shallow soils consist of predominantly fine silty sands to approximately 12 ft bgs. Boring logs for the soil borings completed during this investigation are provided in **Appendix A**.

Site Hydrogeology

Site-specific hydrogeologic information was derived from nine permanent groundwater monitoring wells installed within the Surficial Aquifer. During the August 2009 monitoring well installation and sampling event, the water table was encountered at depths ranging from roughly 1 ft bgs (AS119-MW02) to 3 ft bgs (AS119-MW01), as shown on **Table 3-2**. Groundwater elevation data indicate that groundwater in the Surficial Aquifer near Buildings SAS113 and AS116 generally flows toward the east and groundwater in the Surficial Aquifer near Building AS119 generally flows to the northwest as shown on **Figure 3-3**.

3.3 Regional Water Usage

Regionally in southeastern North Carolina, the Castle Hayne Aquifer is utilized as a source of domestic potable water supply, for watering lawns, and for filling swimming pools. Potable water supplies for MCB CamLej and the surrounding residential areas are provided by water supply wells that pump groundwater from the Castle Hayne Aquifer. Although freshwater is present within the Surficial, Castle Hayne, Beaufort, and Peedee Aquifers, all

of which are located below MCB CamLej, only the Castle Hayne Aquifer is used by MCB CamLej as a water supply source (Cardinell, Berg, and Lloyd, 1993).

Three active public water supply wells were identified within a 4-mile radius of Buildings SAS113, AS116, and AS119, located off-Base and west of U.S. Route 17. A total of 23 water supply wells were also identified on-Base within a 4-mile radius of Buildings SAS113, AS116, and AS119, of which 16 are known to be active water supply wells serving the Camp Geiger, MCAS, Verona Loop, and Holcomb Boulevard well fields, shown on **Figure 3-4** and **Table 3-3**. Based on information provided in the Wellhead Protection Plan, two wells (PSW-TC502 and PSW-TC700) were identified near sources of known VOC contamination located approximately 5,000 ft northwest of the investigation area in the Camp Geiger area of MCAS New River. The wells were abandoned in 2000 (AH Environmental Consultants [AHEC], 2002). MCB CamLej controls all the land between the three buildings and associated groundwater discharge points.

According to the Wellhead Protection Plan, the three buildings are located outside of delineated wellhead protection areas (AHEC, 2002).

TABLE 3-1
Hydrostratigraphic Units of the North Carolina Coastal Plain
Expanded SI Report
MCB CamLej, North Carolina

Geologic Units			Hydrogeologic Units
System	**Series**	**Formation**	**Aquifer and Confining Unit**
Quaternary	Holocene/Pleistocene	Undifferentiated	Surficial Aquifer
Tertiary	Miocene	Yorktown[1]	Yorktown confining unit
			Yorktown Aquifer
		Eastover[1]	Pungo River confining unit
		Pungo River[1]	Pungo River Aquifer
		Belgrade[2]	Castle Hayne confining unit
	Oligocene	River Bend	Castle Hayne Aquifer
			Beaufort confining unit[3]
			Beaufort Aquifer
	Eocene	Castle Hayne	
	Paleocene	Beaufort	
Cretaceous	Upper Cretaceous	Peedee	Peedee Confining Unit
		Black Creek and Middendorf	Black Creek confining unit
			Black Creek Aquifer
		Cape Fear	Upper Cape Fear confining unit
			Upper cape Fear Aquifer
			Lower Cape Fear confining unit
			Lower Cape Fear Aquifer
	Lower Cretaceous	Unnamed deposits[1]	Lower Cretaceous confining unit
			Lower Cretaceous
Pre-Cretaceous basement rocks			

Notes:

[1]Geologic and hydrologic units probably not present beneath MCB Camp Lejeune

[2]Constitutes part of the surficial aquifer and Castle Hayne confining unit in the study area.

[3]Estimated to be confined to deposits of Paleocene age in the study area.

Source: Harned et al., 1989.

TABLE 3-2
Summary of Well Construction and Groundwater Elevations
Expanded SI Report
MCB CamLej, North Carolina

Well ID	Date Installed	Total Well Depth (ft bgs)	Screened Interval (ft bgs)	Ground Surface Elevation (ft msl)	Top of Casing Elevation (ft msl)	Date of Measurement	Depth to Water (ft btoc)	Groundwater Elevation (ft msl)
SAS113-MW01	8/12/2009	11.5	1.5-11.5	17.75	17.43	8/18/2009	2.46	14.97
SAS113-MW02	8/12/2009	11.5	1.5-11.5	17.92	17.61	8/18/2009	2.57	15.04
SAS113-MW03	8/11/2009	11.5	1.5-11.5	18.34	17.88	8/18/2009	2.16	15.72
AS116-MW01	8/11/2009	11.5	1.5-11.5	17.24	17.07	8/18/2009	1.50	15.57
AS116-MW02	8/11/2009	11.5	1.5-11.5	18.07	17.84	8/18/2009	2.08	15.76
AS116-MW03	8/11/2009	11.5	1.5-11.5	18.31	18.01	8/18/2009	2.13	15.88
AS119-MW01	8/13/2009	11.5	1.5-11.5	19.08	18.76	8/18/2009	2.86	15.90
AS119-MW02	8/13/2009	11.5	1.5-11.5	18.73	18.43	8/18/2009	1.12	17.31
AS119-MW03	8/13/2009	11.5	1.5-11.5	19.10	18.80	8/18/2009	1.93	16.87

ft = feet
ft msl = Feet above mean sea level
btoc = below top of casing
bgs = below ground surface

Generated by: Kelly Ramsey/CLT Checked by: Brooke Propst/CLT

TABLE 3-3
Regional Water Supply Wells
Expanded SI Report
MCB CamLej, North Carolina

Well ID	Status	Well Field	Year Drilled	Total Depth (ft)	Diameter (in)	Original Pump Rate (gpm)	Pump Rate 2001 (gpm)
PSW-TC502	Inactive	Camp Geiger	1942	184	10	400	235
PSW-TC600	Active	Camp Geiger	1942	70	8	130	104
PSW-TC604	Active	Camp Geiger	1942	113	8	250	157
PSW-TC700	Inactive	Camp Geiger	1941	76	18	125	149
PSW-TC1000	Active	Camp Geiger	1942	153	8	200	60
PSW-TC1001	Active	Camp Geiger	1975	100	8	175	160
PSW-TC1251	Active	Camp Geiger	1975	155	8	200	175
PSW-TC1253	Active	Camp Geiger	1975	250	NA	200	195
PSW-TC1254	Inactive	Camp Geiger	1975	195	NA	200	100
PSW-AS106	Inactive	MCAS	1954	179	NA	225	183
PSW-AS131	Inactive	MCAS	NA	200	NA	260	275
PSW-AS190	Active	MCAS	NA	180	NA	250	159
PSW-AS191	Active	MCAS	NA	180	NA	250	285
PSW-AS203	Inactive	MCAS	NA	173	NA	130	220
PSW-AS4140	Active	MCAS	NA	193	NA	110	110
PSW-AS4150	Active	MCAS	NA	193	NA	128	115
PSW-AS5001	Active	MCAS	NA	193	NA	185	50
PSW-AS5009	Inactive	MCAS	NA	196	NA	100	111
PSW-VL101	Active	Verona Loop	1994	300	8	950	700
PSW-VL102	Active	Verona Loop	1997	280	12	1001	850
PSW-VL103	Active	Verona Loop	1997	280	12	757	550
PSW-VL104	Active	Verona Loop	1997	300	12	673	525
PSW-VL105	Active	Verona Loop	1997	248	12	673	700
Well #1	Active	Off base	NA	NA	NA	NA	NA
Well #1	Active	Off base	NA	NA	NA	NA	NA
Well #1A	Active	Off base	NA	NA	NA	NA	NA

Notes:

On-Base well data from: AH Environmental Consultants, 2002. *Wellhead Protection Plan, 2002 Update*.

Off-base well data from: Source Water Assessment Propgram (SWAP) http://swap.den.enr.stste.nc.us/swap_app/newer.htm

MCAS - Marine Corps Air Station

NA - Not available

ft- feet

gpm - gallons per minute

in - inch

Generated by: Brooke Propst/CLT Checked by: Chad LeBlanc/BTR

Source: USGS Report by Cardinell, A.P., S.A. Berg, and O.B. Lloyd, Jr. (1993)

Figure 3-1
Physiographic Provinces of Eastern North Carolina
Expanded SI Report
MCB CamLej
North Carolina

CH2MHILL

\\APHRODITE\PROJ\USNAVFACENGCOM\CAMPLEJEUNE\MAPFILES\CTO_74\EXPANDED_SI\FIGURE_3-2_TOPOGRAPHICAL_MAP.MXD MARTESE

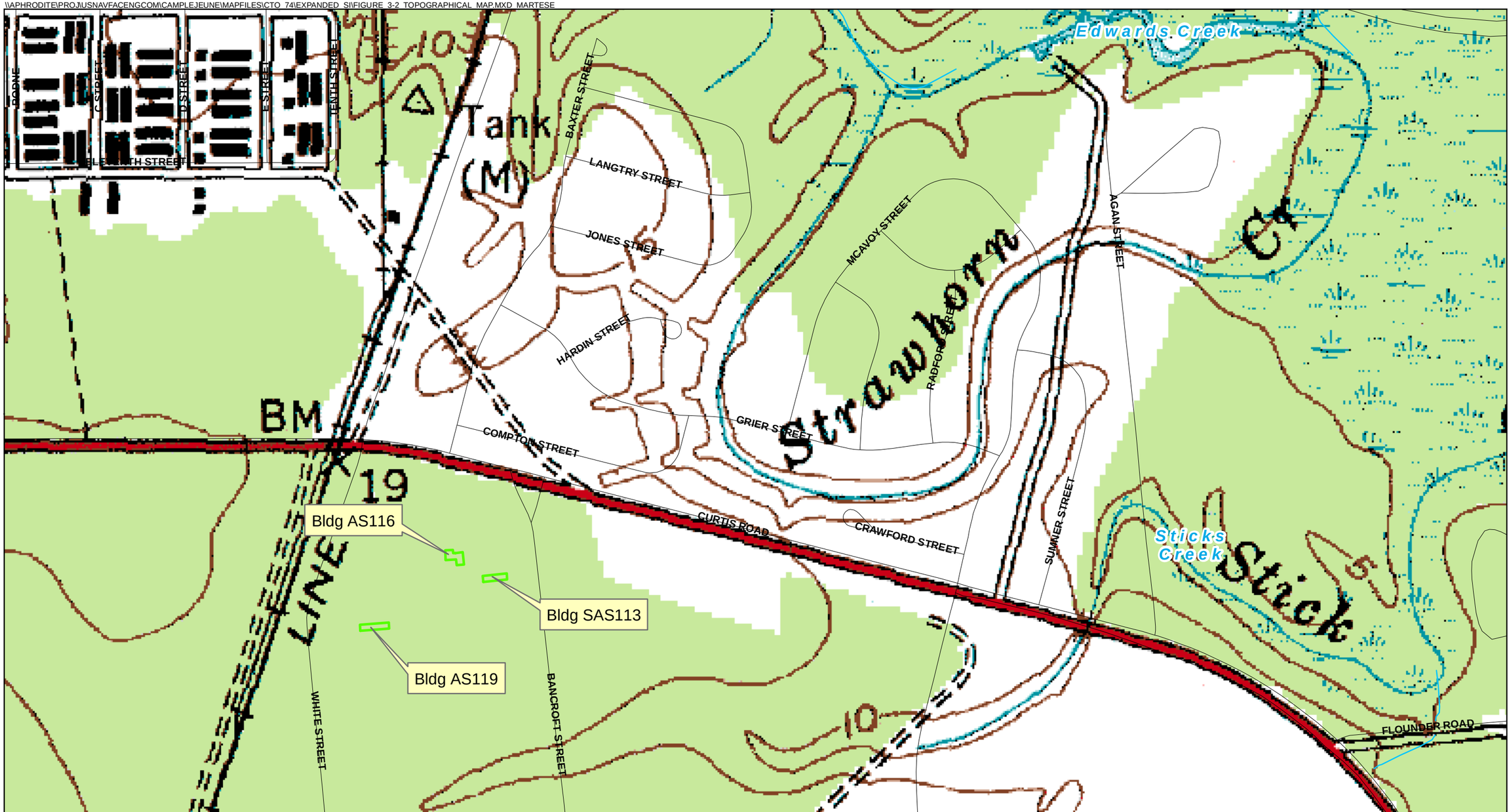

Legend
- Road Centerline
- Topographic Contour Lines
- Surface Water
- PA/SI Sites
- Wetlands

Topo Source: USGS 7.5 min
Quad of Jacksonville South, N.C
Photo inspected in 1988
5 - foot contour interval

N

0 200 400 800 Feet

1 inch = 400 feet

Figure 3-2
Topographic Map
Expanded SI Report
MCB CamLej
North Carolina

CH2MHILL

Generated by: *Brooke Propst/CLT* Checked by: *Chad LeBlanc/BTR*

\\APHRODITE\PROJ\USNAVFACENGCOM\CAMPLEJEUNE\MAPFILES\CTO_74\EXPANDED_SI\FIGURE_3-3_GROUNDWATER ELEVATIONS.MXD MRISSING 1/4/2010 16:24:07

Legend

- Monitoring Well Location
- Groundwater Flow Direction
- PA/SI Sites
- 15.04 Water level elevation (ft msl)

N

0 50 100 200 Feet

1 inch = 100 feet

Figure 3-3
Groundwater Elevations
Expanded SI Report
MCB CamLej
North Carolina

CH2MHILL

Generated by: *Brooke Propst/CLT* Checked by: *Chad LeBlanc/BTR*

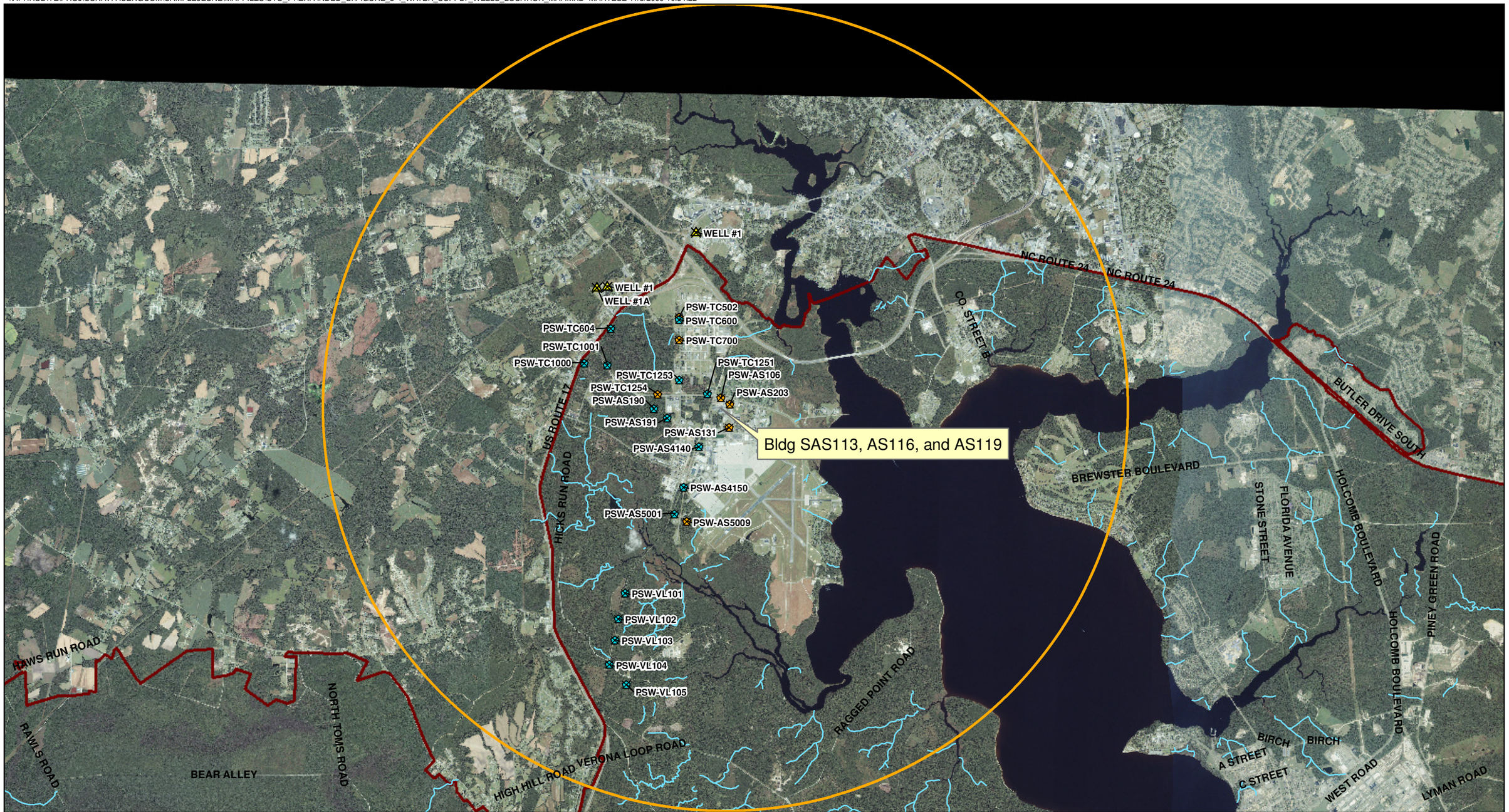

Legend

- Base Water Supply Wells - Active
- Base Water Supply Wells - Inactive
- Public Water Supply Wells
- 4 Mile Radius
- Stream
- Installation Boundary

Note: Aerial imagery not avaliable to the north.

N

0 2,500 5,000 10,000 Feet

1 inch = 5,000 feet

Figure 3-4
Water Supply Well Locations
Expanded SI Report
MCB CamLej
North Carolina

CH2MHILL

Generated by: *Brooke Propst/CLT* Checked by: *Chad LeBlanc/BTR*

SECTION 4

Field Investigation Activities

4.1 Field Investigation Activities

This section presents a summary of activities conducted for the Expanded SI to confirm the findings of the PA/SI at Buildings SAS113, AS116, and AS119. All field activities were conducted in accordance with the UFP-SAP.

The scope of the Expanded SI activities consisted of:

- Installation of three groundwater monitoring wells adjacent to each building
- Collection of groundwater samples
- Surveying of monitoring well locations

4.2 Monitoring Well Installation

In order to evaluate groundwater quality, three shallow groundwater monitoring wells were installed at each building (designated as SAS113-MW01 through SAS113-MW03, AS116-MW01 through AS116-MW03, and AS119-MW01 through AS119-MW03) from August 11 to August 13, 2009. Monitoring well locations are shown on **Figure 3-3**.

The monitoring wells were installed using 4.25-inch inside diameter (ID) hollow stem auger augers. Soil samples were collected for lithologic characterization using 24-inch split spoon samplers collected at 5-ft intervals in accordance with CH2M HILL and Navy CLEAN standard operating procedures (SOPs) as described in the *Master Project Plans* (CH2M HILL, 2008a) and UFP-SAP (CH2M HILL, 2009). Each well boring was advanced to a depth of approximately 12 ft bgs. The monitoring wells consisted of 2-inch ID Schedule 40 polyvinyl chloride (PVC) screen and riser. The well screens consisted of a 10-ft length of 0.010-inch machine slotted Schedule 40 PVC placed to bracket the water table. Silica filter sand was placed around the annular space of the well screen from the bottom of the boring extending to one ft above the top of the screen. A layer of bentonite granules was placed above the top of the sand pack extending to one ft bgs. The bentonite was allowed to hydrate for at least one hour before a cement-grout seal was placed from the top of the bentonite to the ground surface. A locking watertight cap was placed on the PVC pipe. Well construction information is summarized in **Table 3-2,** and well construction diagrams are provided in **Appendix B**.

Approximately 24 hours after completion of the well, each monitoring well was developed using a surge block and submersible pump to remove solids and establish a graded filter pack to reduce well turbidity. Development continued until the turbidity was less than 10 Nephelometric Turbidity Units (NTUs) and pH, specific conductivity, dissolved oxygen (DO), oxidation-reduction potential (ORP), and temperature had stabilized.

4.3 Groundwater Sampling

Following well development, the wells were allowed to equilibrate for at least 24 hours before purging. Groundwater samples were then collected using a peristaltic pump and low-flow sampling methods in accordance with CH2M HILL and Navy CLEAN SOPs as described in the *Master Project Plans* (CH2M HILL, 2008a) and UFP-SAP (CH2M HILL, 2009).

Water quality parameters were measured at approximately 5-minute intervals during purging using a Horiba U-22 water quality meter and Hanna turbidimeter. Purging was deemed complete when water quality parameters had stabilized and at least one well volume had been purged from each well. If groundwater drawdown or water quality parameters did not stabilize, then a minimum of three well volumes were purged from the well. Parameters were considered stabilized when three successive readings were as follows:

- pH within 0.1 pH unit
- Temperature within 10 percent
- Conductivity within 3 percent
- ORP within 10 millivolts (mV)
- DO within 10 percent
- Turbidity below 10 NTUs

Water levels were also measured at approximately 5-minute intervals to determine the drawdown from pumping. **Table 4-1** shows final values for water quality parameters for the August 2009 sampling event. After purging, groundwater samples were collected and placed into appropriate laboratory-provided bottleware for analysis of site-specific metals by Method 6010B, as summarized in **Table 4-2**. Samples were stored on ice under chain-of-custody (COC) control pending shipment to Katahdin Analytical of Scarborough, Maine. The COC forms are included in Appendix C. Laboratory data from the monitoring well sampling event are included in **Appendix D**.

4.4 Site Survey

All newly installed wells were surveyed by Lanier Surveying, a North Carolina-licensed land surveyor from Cedar Point, North Carolina. The well locations were referenced both horizontally and vertically to permanent land monuments or a grid system. The survey controls were tied to a benchmark and North American Datum (NAD) 83 for the horizontal and North American Vertical Datum (NAVD) 88 for the vertical. Ground surface and monitoring well top of casing vertical control was surveyed to the nearest 0.01 ft, and the horizontal control was to the nearest 0.10 ft.

4.5 Data Tracking and Validation

Field sample designations and their corresponding analytical tests were recorded on COC forms, which were submitted with the samples to the laboratory. Upon receipt of the samples by the laboratory, a comparison to the field information was made to determine if each sample was analyzed for the correct parameters. In addition, a check was made to

confirm that the proper number and types of quality assurance/quality control (QA/QC) samples were collected. QA/QC samples include equipment blanks, duplicates, and matrix spike/matrix spike duplicate (MS/MSD) samples.

The samples collected during the Expanded SI were analyzed by Katahdin Analytical of Scarborough, Maine. Analytical data reports for the Expanded SI were submitted to DataQual Environmental Services of St. Louis, Missouri for third-party validation. Data reports were submitted in hard copy and electronic versions. Procedures used for the validation process were *National Functional Guidelines for Inorganic Data Review* (USEPA, 2004). Following validation, the electronic data were downloaded into the CH2M HILL Endat database. These steps (third-party validation and electronic data handling) serve to reduce inherent uncertainties associated with data authenticity and usability.

TABLE 4-1
Summary of Groundwater Parameters
Expanded SI Report
MCB CamLej, North Carolina

Well ID	Date	Temperature (ºC)	Cond. (mS/cm)	DO (mg/L)	pH (SU)	ORP (mV)	Turbidity (NTU)
SAS113-MW01	8/19/2009	30.8	28.3	0.0	5.67	-28	4.07
SAS113-MW02	8/18/2009	29.7	0.96	0.4	5.70	-112	2.20
SAS113-MW03	8/19/2009	31.3	NM	0.2	5.84	-82	4.11
AS116-MW01	8/18/2009	29.1	1.01	2.1	5.66	-116	2.85
AS116-MW02	8/18/2009	29.9	1.36	2.2	5.98	-145	7.23
AS116-MW03	8/18/2009	31.6	1.98	0.2	6.11	-186	1.04
AS119-MW01	8/19/2009	31.5	0.374	NM	5.58	28	30.3
AS119-MW02	8/19/2009	29.5	1.04	0.9	6.42	38	4.74
AS119-MW03	8/19/2009	25.6	0.679	2.0	5.96	-35	10.4

Notes:
NM - not measured
mS/cm - milliSiemens per centimeter
DO - dissolved oxygen
mg/L - milligrams per liter
SU - standard unit
ORP - oxidation reduction potential
mV- millivolts
NTU - nephelometric turbidity unit
^{o}C - degrees Celsius
Created by: Kelly Ramsey/CLT Checked by: Brooke Propst/CLT

TABLE 4-2
Sample Analysis Summary
Expanded SI Report
MCB CamLej, North Carolina

			Total Metals				**Dissolved Metals**			
Building	Well ID	**Sample ID**	**Fe**	**Pb**	**Cr**	**As**	**Fe**	**Pb**	**Cr**	**As**
SAS113	MW01	SAS113-GW01-09C	X	X	X		X	X	X	
	MW02	SAS113-GW02-09C	X	X	X					
	MW03	SAS113-GW03-09C	X	X	X					
AS116	MW01	AS116-GW01-09C	X	X	X	X	X	X	X	X
	MW02	AS116-GW02-09C	X	X	X	X				
	MW03	AS116-GW03-09C	X	X	X	X				
AS119	MW01	AS119-GW01-09C	X	X	X					
	MW02	AS119-GW02-09C	X	X	X		X	X	X	
	MW03	AS119-GW03-09C	X	X	X					

Notes:
Fe - iron
Pb - lead
Cr - chromium
As - arsenic

Created by: Brooke Propst/CLT Checked by: Chad LeBlanc/BTR

SECTION 5

Investigation Results

This section presents the investigation results from the Expanded SI.

5.1 Groundwater Analytical Results

Groundwater analytical results for the samples collected in the vicinity of Buildings SAS113, AS116, and AS119 are summarized on **Figure 5-1**. Complete analytical results are provided in **Appendix D**. For evaluation, analytical results for groundwater were compared to two times the mean Base background concentrations, and then to the NCGWQS or MCLs, whichever was the more stringent standard.

5.1.1 Building SAS113

Groundwater samples collected from the monitoring wells installed near Building SAS113 were analyzed for chromium, iron, and lead. Only iron was detected at concentrations exceeding the laboratory reporting limit at concentrations ranging from 6,060 µg/L (SAS113-MW03) to 7,870 µg/L (SAS113-MW02), exceeding the NCGWQS (300 µg/L). In addition, these concentrations slightly exceeded Base background concentration for iron (5,999 µg/L). No other metals were detected at concentrations greater than the laboratory reporting limits (**Figure 5-1**).

5.1.2 Building AS116

Groundwater samples collected from the monitoring wells installed near Building AS116 were analyzed for arsenic, chromium, iron, and lead. Two metals, arsenic and iron, were detected at concentrations exceeding the laboratory reporting limit. Only iron exceeded screening criteria, at concentrations ranging from 4,630 µg/L (AS116-MW03) to 6,820 µg/L (AS116-MW02), all of which exceed the NCGWQS (300 µg/L). The Base background concentration for iron (5,999 µg/L) was exceeded only in the sample collected from AS116-MW02 (**Figure 5-1**).

5.1.3 Building AS119

Groundwater samples collected from the monitoring wells installed near Building AS119 were analyzed for chromium, iron, and lead. Only iron was detected at concentrations exceeding the laboratory reporting limit. Iron was detected at concentrations ranging from 209 µg/L (AS119-MW02) to 2,080 µg/L (AS119-MW01). The NCGWQS for iron (300 µg/L) was exceeded by two groundwater samples (AS119-MW01 and AS119-MW03); however, the Base background concentration was not exceeded (**Figure 5-1**).

\\APHRODITE\PROJ\USNAVFACENGCOM\CAMPLEJEUNE\MAPFILES\CTO_74\EXPANDED_SI\FIGURE_5-1_METALS_CONCENTRATION_GW_MAP_xxx17.MXD MARTESE

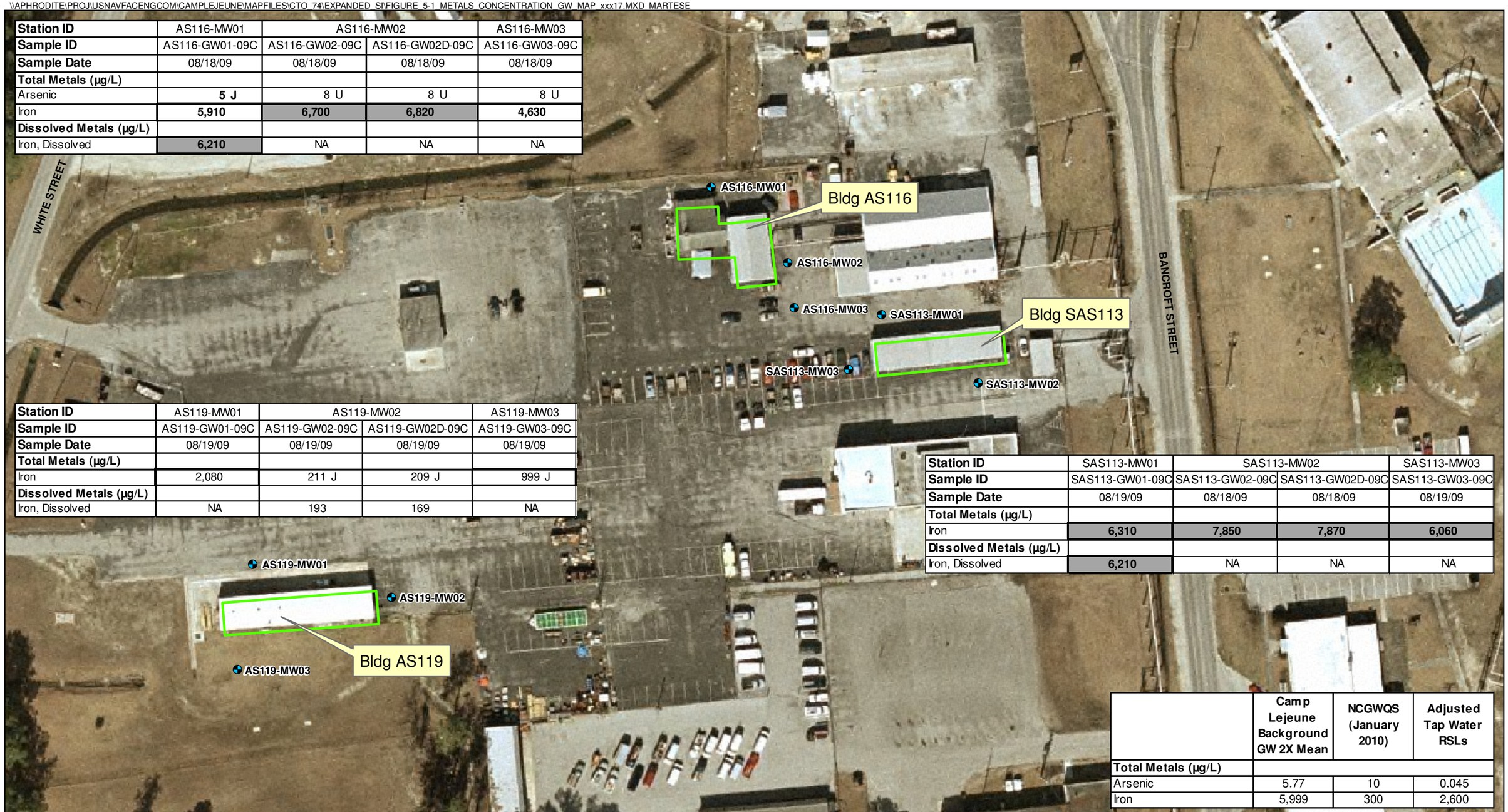

Station ID	AS116-MW01	AS116-MW02		AS116-MW03
Sample ID	AS116-GW01-09C	AS116-GW02-09C	AS116-GW02D-09C	AS116-GW03-09C
Sample Date	08/18/09	08/18/09	08/18/09	08/18/09
Total Metals (µg/L)				
Arsenic	**5 J**	8 U	8 U	8 U
Iron	**5,910**	**6,700**	**6,820**	**4,630**
Dissolved Metals (µg/L)				
Iron, Dissolved	**6,210**	NA	NA	NA

Station ID	AS119-MW01	AS119-MW02		AS119-MW03
Sample ID	AS119-GW01-09C	AS119-GW02-09C	AS119-GW02D-09C	AS119-GW03-09C
Sample Date	08/19/09	08/19/09	08/19/09	08/19/09
Total Metals (µg/L)				
Iron	2,080	211 J	209 J	999 J
Dissolved Metals (µg/L)				
Iron, Dissolved	NA	193	169	NA

Station ID	SAS113-MW01	SAS113-MW02		SAS113-MW03
Sample ID	SAS113-GW01-09C	SAS113-GW02-09C	SAS113-GW02D-09C	SAS113-GW03-09C
Sample Date	08/19/09	08/18/09	08/18/09	08/19/09
Total Metals (µg/L)				
Iron	**6,310**	**7,850**	**7,870**	**6,060**
Dissolved Metals (µg/L)				
Iron, Dissolved	**6,210**	NA	NA	NA

	Camp Lejeune Background GW 2X Mean	NCGWQS (January 2010)	Adjusted Tap Water RSLs
Total Metals (µg/L)			
Arsenic	5.77	10	0.045
Iron	5,999	300	2,600

Legend
- Monitoring Well Location
- PA/SI Sites
- Wetlands
- Stream

Notes:
Shading indicates exceedance of two times the mean base background concentration for Groundwater
Bold box indicates exceedance of NCGWQS
Bold text indicates exceedance of Adjusted Tap Water RSLs
NA - Not analyzed
NE - Not established
J - Analyte present, value may or may not be accurate or precise
U - Analyte not detected
µg/l - Micrograms per liter

N

0 37.5 75 150 Feet

1 inch = 75 feet

Figure 5-1
Analytical Results
Expanded SI Report
MCB CamLej
North Carolina

CH2MHILL

Generated by: *Brooke Propst/CLT* Checked by: *Chad LeBlanc/BTR*

SECTION 6

Risk Screenings

Risk screenings were not conducted during the PA/SI. Soil and groundwater are the only media present at each building which could result in exposure to current and future receptors. Based on the results of the PA/SI, soil was not investigated further at any building as part of this Expanded SI.

Analytical results from the Expanded SI were used to determine the applicability of risk screening for groundwater at each building. Groundwater samples collected from wells installed near Buildings SAS113 and AS116 contained metals at concentrations exceeding both NCGWQS and Base background concentrations. As a result, conservative preliminary risk screenings were performed to evaluate the potential for risks associated with exposure to metals in groundwater at these two buildings only.

6.1 Human Health Risk Screening

The results of the human health risk screening for groundwater collected near each building are presented in **Appendix E** and provide a preliminary indication of potential risks from chemicals of potential concern (COPCs). These results are used to help evaluate whether (1) the site requires further investigation (e.g., a baseline risk assessment or additional data collection) or (2) future residential use of the site is acceptable based on human health risks.

The human health risk screening for Buildings SAS113 and AS116 was conducted in two steps using a risk ratio technique (U.S. Navy, 2000). If COPCs were identified after Step 1, the COPCs were evaluated in Step 2. The two-step screening process is described below.

6.1.1 Step 1

The maximum detected concentrations in groundwater at each building were compared to human health Regional Screening Levels (RSLs) (USEPA, 2009) and the Base background concentrations. RSLs based on noncarcinogenic effects were divided by 10 to account for exposure to multiple constituents (i.e., were adjusted to a hazard quotient of 0.1, from the hazard quotient of 1.0 used on the RSL table). RSLs based on carcinogenic endpoints were used as presented in the RSL table, and are based on a carcinogenic risk of 1×10^{-6}.

The groundwater data were compared to tap water RSLs. Groundwater data were also compared to MCLs and the NC Maximum Allowable Concentrations or Interim Maximum Allowable Concentrations (NCGWQS); however, these comparisons were not used to identify the groundwater COPCs to carry forward to Step 2.

If the maximum detected concentration exceeded the appropriate RSL and background concentration, the screening level risk evaluation proceeded to Step 2.

6.1.2 Step 2

For constituents identified as COPCs in Step 1, a corresponding risk level was calculated using the following equation:

$$\text{corresponding risk level} = \frac{\text{concentration x acceptable risk level}}{\text{RSL}}$$

The concentration was the maximum detected concentration (the same concentration that was used in Step 1). The acceptable risk level was 1 for noncarcinogens and 10^{-6} for carcinogens. RSLs for noncarcinogenic effects were not adjusted by 10 as was done in Step 1; rather, they were used as presented in the RSL table. The corresponding risk level was calculated using the equation above. All of the corresponding risk levels for each constituent within a medium were summed to calculate the cumulative corresponding hazard index (for noncarcinogens) and cumulative corresponding carcinogenic risk (for carcinogens). A cumulative corresponding hazard index was also calculated for each target organ/effect. If the cumulative corresponding hazard index for a target organ/ effect was greater than 0.5, or the cumulative corresponding carcinogenic risk was greater than 5×10^{-5}, the constituents contributing to these values were retained as COPCs and further evaluation of the site may be necessary.

6.2 Human Health Risk Screening Results

6.2.1 Building SAS113

S*tep 1*: Table 2.1 in **Appendix E** shows the results of the Step 1 screening. Iron was retained as a COPC for groundwater and was therefore carried forward to Step 2.

Step 2: The Step 2 risk ratio screening for Building SAS113, shown on Table 2.1a in **Appendix E**, eliminated iron as a COPC. The cumulative corresponding hazard index of 0.3 is below the target level of 0.5. Therefore, exposure to groundwater is not expected to result in any unacceptable human health risks.

6.2.2 Building AS116

*Step 1***:** Table 2.2 in **Appendix E** shows the results of the Step 1 screening. Iron was retained as a COPC for the groundwater and was therefore carried forward to Step 2.

Step 2: The Step 2 risk ratio screening for Building AS116, shown on Table 2.2a in **Appendix E**, eliminated iron as a COPC. The cumulative corresponding hazard index of 0.3 is below the target level of 0.5. Therefore, exposure to groundwater is not expected to result in any unacceptable human health risks.

6.3 Ecological Risk Screening

No ecological receptors to groundwater were identified in the vicinity of Buildings SAS113, AS116, or AS119. Further, no groundwater discharge points were encountered in the vicinity of Buildings SAS113, AS116, or AS119. As a result, a complete exposure pathway for ecological receptors could not be identified and an ecological risk screening was not performed.

SECTION 7

Conclusions and Recommendations

This section presents the conclusions from the Expanded SI conducted to confirm the findings of the PA/SI. Recommendations based on these conclusions are also presented in this section.

7.1 Building M119

The PA/SI recommended further investigation of metals in groundwater at Building M119, as a result of the detection of iron in one groundwater sample at a concentration exceeding both the NCGWQS and Base background concentration. Upon further review by the Partnering Team, it was determined that the isolated detection of iron did not warrant additional investigation. The Partnering Team concurred in April 2009 that no further action was necessary.

7.2 Building M315

As a result of the detection of iron and lead at concentrations exceeding both the NCGWQS and Base background concentrations in one groundwater sample, the PA/SI recommended further investigation of metals in groundwater at Building M315. However, it was later discovered that that the former building use was a laundry pickup facility rather than a dry cleaning facility. Upon further review by the Partnering Team, it was determined that the isolated detections of iron and lead did not warrant additional investigation. The Partnering Team concurred in November 2009 that no further action was necessary.

7.3 Building SAS113

The three groundwater samples collected from monitoring wells installed in the vicinity of Building SAS113 were analyzed for three select metals: chromium, iron, and lead. Only iron was reported to be present at concentrations above laboratory detection limits. The detected iron concentrations exceeded the NCGWQS and Base background concentrations. However, no unacceptable human health or ecological risks were identified for groundwater at Building SAS113, and no further action is recommended for this site. The Partnering Team concurred in November 2009 that no further action was necessary. The abandonment of the three monitoring wells associated with Building SAS113 is recommended.

7.4 Building AS116

The three groundwater samples collected from monitoring wells installed in the vicinity of Building AS116 were analyzed for four select metals: arsenic, chromium, iron, and lead. Two metals (arsenic and iron) were reported to be present at concentrations above laboratory detection limits. Arsenic was not detected above the NCGWQS or Base background concentration. Iron was detected above the NCGWQS in all three samples; only one sample

exceeded the Base background concentration. However, no unacceptable human health or ecological risks were identified for groundwater at Building AS116 and no further action is recommended for Building AS116. The Partnering Team concurred in November 2009 that no further action was necessary. The abandonment of the three monitoring wells associated with Building AS116 is recommended.

7.5 Building AS119

The three groundwater samples collected from monitoring wells installed in the vicinity of Building AS119 were analyzed for three metals: chromium, iron, and lead. Only iron was reported to be present at concentrations above laboratory detection limits. Iron was not detected at concentrations exceeding both NCGWQS and Base background concentrations. Based on the results of the Expanded SI, no further action is recommended for Building AS119. The Partnering Team concurred in November 2009 that no further action was necessary. The abandonment of the three monitoring wells associated with Building AS119 is recommended.

SECTION 8

References

AH Environmental Consultants (AHEC). 2002. *Wellhead Protection Plan, 2002 Update.* August.

Baker Environmental. 2005. *Phase II Confirmatory Sampling Report, Marine Corps Base Camp Lejeune.* November.

Baker Environmental. 2001. *Phase I Confirmatory Sampling Report, Marine Corps Base Camp Lejeune*. November.

Cardinell, Berg, and Lloyd, 1993. *Hydrogeologic Framework of U.S. Marine Corps Base at Camp Lejeune, North Carolina*. USGS. Water-Resources Investigations Report 93-4049.

CH2M HILL. 2006. *Preliminary Assessment/Site Investigation, Marine Corps Base, Camp Lejeune, North Carolina*. February.

CH2M HILL. 2008a. *Master Project Plans, Marine Corps Base Camp Lejeune, Jacksonville, North Carolina.* June 2008.

CH2M HILL. 2008b. *RCRA Facility Investigation Report SWMU 475, Marine Corps Base Camp Lejeune, Jacksonville, North Carolina,* October 2008.

CH2M HILL, 2009. *Groundwater Sampling and Analysis Plan, Expanded Site Investigation for MCAS Buildings SAS113, As116, and AS119*, Marine Corps Base Camp Lejeune, North Carolina, July.

Harned et al., 1989. *Assessment of Hydrologic and Hydrogeologic Data at Camp Lejeune Marin Corps Base, North Carolina.* USGS. Water Resources Investigation Report 89-4096.

Heath, 1989. *Basic Groundwater Hydrology*. U.S. Geological Survey WSP 2220. 1989.

U.S. Navy. 2000. *Overview of Screening, Risk Ratio, and Toxicological Evaluation*. Procedures for Northern Division Human Health Risk Assessments. May 2000.

United States Environmental Protection Agency (USEPA). 2004. *National Functional Guidelines for Inorganic Data Review.* 2004.

United States Environmental Protection Agency (USEPA), 2009. Regional Screening Levels for Chemicals at Superfund Sites. May.

Appendix A
Boring Logs

Boring Number: SAS113-MW01

Client: NAVFAC
Project: CTO-74 Expanded Site Investigation
Location: MCAS New River Building SAS113
Project Number: 388283.FI.WI

Driller: ARM
Drilling Method: 4.25" HSA (Foremost B61)
Sampling Method: split spoon
Logged by: Brooke Propst
Start/Finish Date: 8/12/19; 0900/1008

Depth (ft)	Sample #	Sample Type	Recovery (%)	SPT (6"-6"-6")	Soil Log	Soil Description	Comments
						Ground Surface	
0						**Asphalt**	Ambient Air Monitoring
						Gravel	0.0 ppm
						Silty Sand (SM) Brown, dry to damp, loose, fine grained	
	HA	HA	100	NA		**Sandy Silt (OL)** Brown, damp to wet, soft, fine grained	
						Sandy Silt (ML) Brown, wet, soft, fine grained	
5							0.0 ppm
	SS-1	SS	100	NA		**Sandy Clay (SL)** Light brown, moist, medium stiff to soft, fine grained, sand ~5%	
						Sand (SP) Light brown/tan, wet, loose, fine grained	
							Complete boring to 12' and set 6" of sand at bottom boring before setting the well
						No recovery	
10	SS-2	SS	75	NA		**Sand (SP)** Olive gray, wet, medium dense to loose, fine grained, trace silt	Set SAS113-MW01 at 11.5' bgs Screen (0.010" slot): 1.5'-11.5' Sand (5 50lb bags, #2): 0.8-12' Bentonite (0.25 50lb bag pellets): 0.3-0.8' Concrete: 0-0.3'
15							
20							

Boring Number: SAS113-MW02

Client: NAVFAC
Project: CTO-74 Expanded Site Investigation
Location: MCAS New River Building SAS113
Project Number: 388283.FI.WI

Driller: ARM
Drilling Method: 4.25" HSA (Foremost B61)
Sampling Method: split spoon
Logged by: Brooke Propst
Start/Finish Date: 8/12/19; 1035/1135

Depth (ft)	Sample #	Sample Type	Recovery (%)	SPT (6"-6"-6")	Soil Log	Soil Description	Comments
						Ground Surface	
0						**Asphalt**	Ambient Air Monitoring
						Gravel	0.0 ppm
	HA	HA	100	NA		**Silty Sand (SM)** Tan, dry to damp, loose, fine grained	
						Sandy Silt (OL) Brown, damp to wet, soft, fine grained	
5							0.0 ppm
	SS-1	SS	100	NA		**Sandy Silt (ML)** Brown/gray, wet, soft, fine grained	
						Sandy Clay (CL) Tan, wet, soft, fine grained	
						Sand (SP) Tan, wet, loose, fine grained	
							Complete boring to 12' and set 6" of sand at bottom boring before setting the well
10	SS-2	SS	25	NA			Set SAS113-MW02 at 11.5' bgs
						No recovery	Screen (0.010" slot): 1.5'-11.5'
						Silty Sand (SM) Olive gray, wet, loose, fine grained	Sand (5 50lb bags, #2): 0.8-12' Bentonite (0.25 50lb bag pellets): 0.3-0.8' Concrete: 0-0.3'
15							
20							

Boring Number: SAS113-MW03

Client: NAVFAC
Project: CTO-74 Expanded Site Investigation
Location: MCAS New River Building SAS113
Project Number: 388283.FI.WI

Driller: ARM
Drilling Method: 4.25" HSA (Foremost B61)
Sampling Method: split spoon
Logged by: Brooke Propst
Start/Finish Date: 8/11/19; 1560/1620

Depth (ft)	Sample #	Sample Type	Recovery (%)	SPT (6"-6"-6")	Soil Log	Soil Description	Comments
						Ground Surface	
0						**Asphalt**	Ambient Air Monitoring
						Gravel	0.0 ppm
						Silty Sand (SM) Light brown, dry to damp, loose, fine grained	
	HA	HA	100	NA		**Sandy Silt (OL)** Brown, damp to wet, loose to medium dense, fine grained	
5						**Sandy Clayey Silt (SM)** Brown, wet, loose, fine grained	0.0 ppm
	SS-1	SS	100	NA		**Clayey Sand (SC)** Light brown/gray, wet, medium dense, fine grained	
						Sand (SP) Light brown/gray, wet, medium dense, fine grained	
10	SS-2	SS	100	NA		**Sand (SP)** Light brown/gray, wet, medium dense to loose, fine grained, trace silt	Complete boring to 12' and set 6" of sand at bottom boring before setting the well Set SAS113-MW03 at 11.5' bgs Screen (0.010" slot): 1.5'-11.5' Sand)5.5 50 lb bags, #2): 0.8-12' Bentonite (0.25 50lb bag pellets): 0.3-0.8' Concrete: 0-0.3'
15							
20							

Boring Number: AS116-MW01

Client: NAVFAC
Project: CTO-74 Expanded Site Investigation
Location: MCAS New River Building AS116
Project Number: 388283.FI.WI

Driller: ARM
Drilling Method: 4.25" HSA (Foremost B61)
Sampling Method: split spoon
Logged by: Brooke Propst
Start/Finish Date: 8/11/19; 0920/1050

Depth (ft)	Sample #	Sample Type	Recovery (%)	SPT (6"-6"-6")	Soil Log	Soil Description	Comments
						Ground Surface	
0						**Asphalt**	Ambient Air Monitoring
						Gravel	0.0 ppm
	HA	HA	100	NA		**Silty Sand (SM)** Dark gray, damp to wet, loose, fine grained	
						Sandy Clay (CL) Gray, wet, soft, fine grained, trace shell pieces	
5	SS-1	SS	75	NA		**Sand (SP)** Tan, wet, medium dense, fine grained	0.0 ppm
10	SS-2	SS	0	NA		No recovery, clayey sand observed on outside of augers when they were removed from the boring	Complete boring to 12' and set 6" of sand at bottom boring before setting the well Set AS116-MW01 at 11.5' bgs Screen (0.010" slot): 1.5-11.5' Sand (5.5 50lb bags, #2): 0.8-12' Bentonite (0.25 50lb bag pellets): 0.3-0.8' Concrete: 0-0.3'
15							
20							

Boring Number: AS116-MW02

Client: NAVFAC
Project: CTO-74 Expanded Site Investigation
Location: MCAS New River Building AS116
Project Number: 388283.FI.WI

Driller: ARM
Drilling Method: 4.25" HSA (Foremost B61)
Sampling Method: split spoon
Logged by: Brooke Propst
Start/Finish Date: 8/11/19; 1245/1325

Depth (ft)	Sample #	Sample Type	Recovery (%)	SPT (6"-6"-6")	Soil Log	Soil Description	Comments
						Ground Surface	
0						**Asphalt**	Ambient Air Monitoring
						Gravel	0.0 ppm
						Silty Sand (SM) Orange-brown, dry to damp, loose, fine grained	
	HA	HA	100	NA		**Sand (SP)** Tan, wet, dense, fine grained	
5						**Silty Sandy Clay (CL)** Dark gray, wet, soft, fine grained	0.0 ppm
	SS-1	SS	75	NA		**No recovery**	
						Sandy Clay (CL) Light brown, wet, medium stiff	
						Clayey Sand (SC) Tan, wet, medium dense to loose, fine grained	
10	SS-2	SS	100	NA		**Clayey Sand (SC)** Gray, wet, medium dense, fine grained	Complete boring to 12' and set 6" of sand at bottom boring before setting the well Set AS116-MW02 at 11.5' bgs Screen (0.010" slot): 1.5-11.5' Sand (5.5 50lb bags, #2): 0.8-12' Bentonite (0.25 50lb bag pellets): 0.3-0.8' Concrete: 0-0.3'
15							
20							

Boring Number: AS116-MW03

Client: NAVFAC
Project: CTO-74 Expanded Site Investigation
Location: MCAS New River Building AS116
Project Number: 388283.FI.WI

Driller: ARM
Drilling Method: 4.25" HSA (Foremost B61)
Sampling Method: split spoon
Logged by: Brooke Propst
Start/Finish Date: 8/11/19; 1345/1500

Depth (ft)	Sample #	Sample Type	Recovery (%)	SPT (6"-6"-6")	Soil Log	Soil Description	Comments
						Ground Surface	
0						**Asphalt**	Ambient Air Monitoring
						Gravel	0.0 ppm
						Silty Sand (SM) Orange-brown, dry to damp, loose, fine grained	
	HA	HA	100	NA		**Sand (SP)** Tan, damp to wet, loose, fine grained	
5						**Silty Sand (SM)** Dark gray, wet, medium dense, fine grained	0.0 ppm
	SS-1	SS	50	NA		**Silty Sandy Clay (CL)** Dark gray, wet, fine grained	
						No recovery	
						Sand (SP) Light brown, wet, medium dense, fine grained	
10	SS-2	SS	100	NA		**Sand (SP)** Same as 6-7'	Complete boring to 12' and set 6" of sand at bottom boring before setting the well Set AS116-MW03 at 11.5' bgs Screen (0.010" slot): 1.5-11.5' Sand (5.5 50lb bags, #2): 0.8-12' Bentonite (0.25 50lb bag pellets): 0.3-0.8' Concrete: 0-0.3'
15							
20							

Boring Number: AS119-MW01

Client: NAVFAC
Project: CTO-74 Expanded Site Investigation
Location: MCAS New River Building AS119
Project Number: 388283.FI.WI

Driller: ARM
Drilling Method: 4.25" HSA (Foremost B61)
Sampling Method: split spoon
Logged by: Brooke Propst
Start/Finish Date: 8/13/19; 0750/0850

Depth (ft)	Sample #	Sample Type	Recovery (%)	SPT (6"-6"-6")	Soil Log	Soil Description	Comments
						Ground Surface	
0						**Asphalt**	Ambient Air Monitoring
						Gravel	0.0 ppm
						Silty Sand (SM) Orange-brown, dry to damp, loose, fine grained	
	HA	HA	100	NA		**Sandy Silt (OL)** Dark gray, moist to wet, loose, fine grained	
5							0.0 ppm
						No recovery	
	SS-1	SS	50	NA		**Sandy Silty (SM)** Olive gray, wet, loose, fine grained	
						No recovery	Complete boring to 12' and set 6" of sand at bottom boring before setting the well
10	SS-2	SS	50	NA		**Sandy Silt (SM)** Same as 6-7'	Set AS119-MW01 at 11.5' bgs Screen (0.010" slot): 1.5-11.5' Sand (5.5 50lb bags, #2): 0.8-12' Bentonite (0.25 50lb bag pellets): 0.3-0.8' Concrete: 0-0.3'
15							
20							

Boring Number: AS119-MW02

Client: NAVFAC
Project: CTO-74 Expanded Site Investigation
Location: MCAS New River Building AS119
Project Number: 388283.FI.WI

Driller: ARM
Drilling Method: 4.25" HSA (Foremost B61)
Sampling Method: split spoon
Logged by: Brooke Propst
Start/Finish Date: 8/13/19; 0945/1050

Depth (ft)	Sample #	Sample Type	Recovery (%)	SPT (6"-6"-6")	Soil Log	Soil Description	Comments
						Ground Surface	
0						**Asphalt**	Ambient Air Monitoring
						Gravel	0.0 ppm
	HA	HA	100	NA		**Silty Sand (SM)** Tan, damp to wet, loose, fine grained	
5						**Silty sand (SM)** Gray, wet, medium dense to loose, fine grained	0.0 ppm
	SS-1	SS	100	NA		**Sand (SP)** Gray, wet, loose, fine grained	
10	SS-2	SS	100	NA		**Sandy Silt (SM)** Gray, wet, loose, fine grained	Complete boring to 12' and set 6" of sand at bottom boring before setting the well Set AS119-MW02 at 11.5 bgs Screen (0.010" slot): 1.5-11.5' Sand (5.5 50lb bags, #2): 0.8-12' Bentonite (0.25 50lb bag pellets): 0.3-0.8' Concrete: 0-0.3'
15							
20							

Boring Number: AS119-MW03

Client: NAVFAC
Project: CTO-74 Expanded Site Investigation
Location: MCAS New River Building AS119
Project Number: 388283.FI.WI

Driller: ARM
Drilling Method: 4.25" HSA (Foremost B61)
Sampling Method: split spoon
Logged by: Brooke Propst
Start/Finish Date: 8/13/19; 1430/1530

Depth (ft)	Sample #	Sample Type	Recovery (%)	SPT (6"-6"-6")	Soil Log	Soil Description	Comments
						Ground Surface	
0						**Grass/Soil**	Ambient Air Monitoring
	HA	HA	100	NA		**Sandy Silt (OL)** Dark gray, wet, loose, fine grained	0.0 ppm
						Sand (SP) Gray, wet, medium dense to loose, fine grained	
5	SS-1	SS	85	NA		**Silty Sand (SM)** Gray, wet, medium dense to loose, fine grained	0.0 ppm
						No recovery	Complete boring to 12' and set 6" of sand at bottom boring before setting the well Set AS119-MW03 at 11.5' bgs Screen (0.010" slot): 1.5-11.5' Sand (5.5 50lb bags, #2): 0.8-12' Bentonite (0.25 50lb bag pellets): 0.3-0.8' Concrete: 0-0.3'
10	SS-2	SS	75	NA		**Sandy Silt (SM)** Gray, wet, loose, fine grained	
15							
20							

Appendix B
Well Construction Diagrams

PROJECT NUMBER	WELL NUMBER	
388283.FI.WI	SAS113-MW01	SHEET 1 OF 1

WELL COMPLETION DIAGRAM

PROJECT : CTO-74, Expanded Site Investigation LOCATION : MCAS New River, Building SAS113

DRILLING CONTRACTOR : ARM

DRILLING METHOD AND EQUIPMENT USED 4.25" HSA with split spoons (Foremost B61)

DEPTH TO WATER: 2.46 ft BTOC START : 8/12/09; 0900 END : 8/12/09; 1009 LOGGER : Brooke Propst

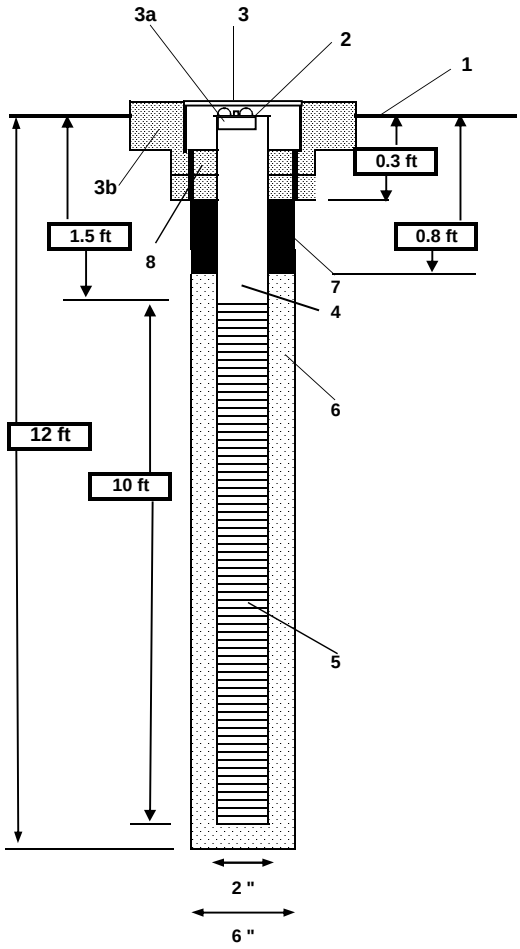

1-	Ground elevation at well	17.75 ft msl
2-	Top of casing elevation	17.43 ft msl
3-	Wellhead protection cover type	8 inch Manhole
	a) locking expansion plug	Installed
	b) concrete pad dimensions	2 ft x 2 ft x 0.7 ft
4-	Dia./type of well casing	2 inch schedule 40 PVC
5-	Type/slot size of screen	.010 inch machince slot
6-	Type screen filter	NSF #2 Sand
	a) Quantity used	5.5 50lb bags
7-	Type of seal	Enviroplug Medium Bentonite Pellets
8-	Grout	
	a) Grout mix used	Concrete
	Development method	Over Pump and Surge (whale pump)

PROJECT NUMBER	WELL NUMBER	
388283.FI.WI	SAS113-MW02	SHEET 1 OF 1

WELL COMPLETION DIAGRAM

PROJECT : CTO-74, Expanded Site Investigation LOCATION : MCAS New River, Building SAS113

DRILLING CONTRACTOR : ARM

DRILLING METHOD AND EQUIPMENT USED 4.25" HSA with split spoons (Foremost B61)

DEPTH TO WATER: 2.57 ft BTOC START : 8/12/09; 1034 END : 8/12/09; 1134 LOGGER : Brooke Propst

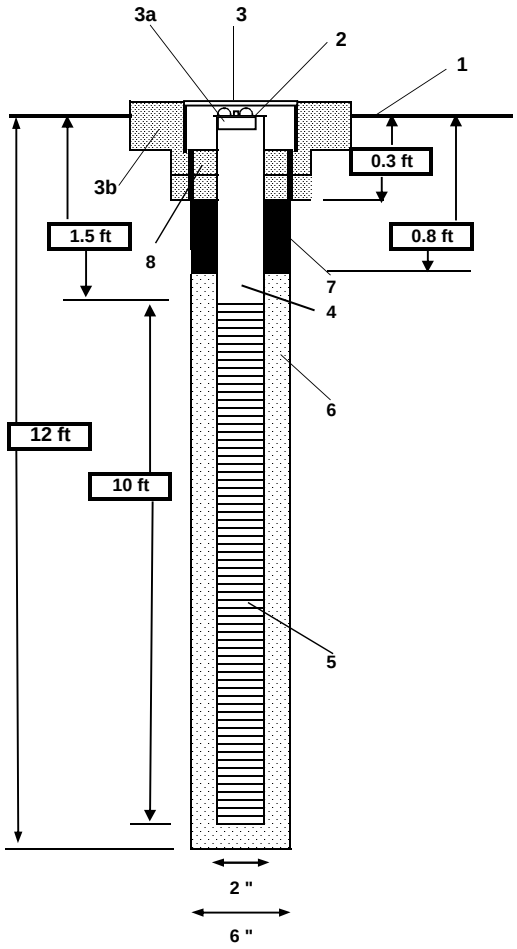

1-	Ground elevation at well	17.92 ft msl
2-	Top of casing elevation	17.61 ft msl
3-	Wellhead protection cover type	8 inch Manhole
	a) locking expansion plug	Installed
	b) concrete pad dimensions	2 ft x 2 ft x 0.7 ft
4-	Dia./type of well casing	2 inch schedule 40 PVC
5-	Type/slot size of screen	.010 inch machince slot
6-	Type screen filter	NSF #2 Sand
	a) Quantity used	5 50lb bags
7-	Type of seal	Enviroplug Medium Bentonite Pellets
8-	Grout	
	a) Grout mix used	Concrete
	Development method	Over Pump and Surge (whale pump)

PROJECT NUMBER	WELL NUMBER	
388283.FI.WI	SAS113-MW03	SHEET 1 OF 1

WELL COMPLETION DIAGRAM

PROJECT : CTO-74, Expanded Site Investigation LOCATION : MCAS New River, Building SAS113

DRILLING CONTRACTOR : ARM

DRILLING METHOD AND EQUIPMENT USED 4.25" HSA with split spoons (Foremost B61)

DEPTH TO WATER: 2.16 ft BTOC START : 8/11/09; 1530 END : 8/11/09; 1620 LOGGER : Brooke Propst

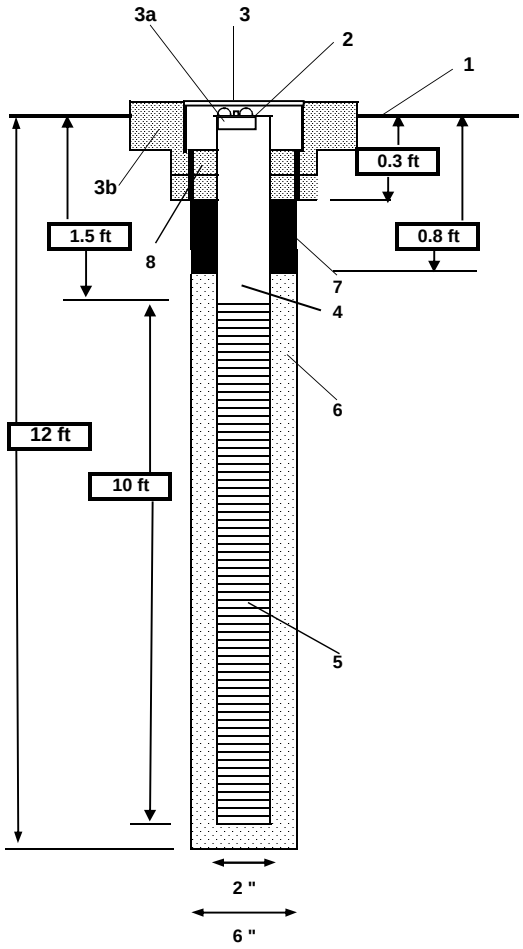

1-	Ground elevation at well	18.34 ft msl
2-	Top of casing elevation	17.88 ft msl
3-	Wellhead protection cover type	8 inch Manhole
	a) locking expansion plug	Installed
	b) concrete pad dimensions	2 ft x 2 ft x 0.7 ft
4-	Dia./type of well casing	2 inch schedule 40 PVC
5-	Type/slot size of screen	.010 inch machince slot
6-	Type screen filter	NSF #2 Sand
	a) Quantity used	5 50 lb bags
7-	Type of seal	Enviroplug Medium Bentonite Pellets
8-	Grout	
	a) Grout mix used	Concrete
	Development method	Over Pump and Surge (whale pump)

PROJECT NUMBER	WELL NUMBER	
388283.FI.WI	AS116-MW01	SHEET 1 OF 1

WELL COMPLETION DIAGRAM

PROJECT : CTO-74, Expanded Site Investigation LOCATION : MCAS New River, Building AS116

DRILLING CONTRACTOR : ARM

DRILLING METHOD AND EQUIPMENT USED 4.25" HSA with split spoons (Foremost Model B61)

DEPTH TO WATER: 1.5' BTOC START : 8/11/09; 0920 END : 8/11/09; 1050 LOGGER : Brooke Propst

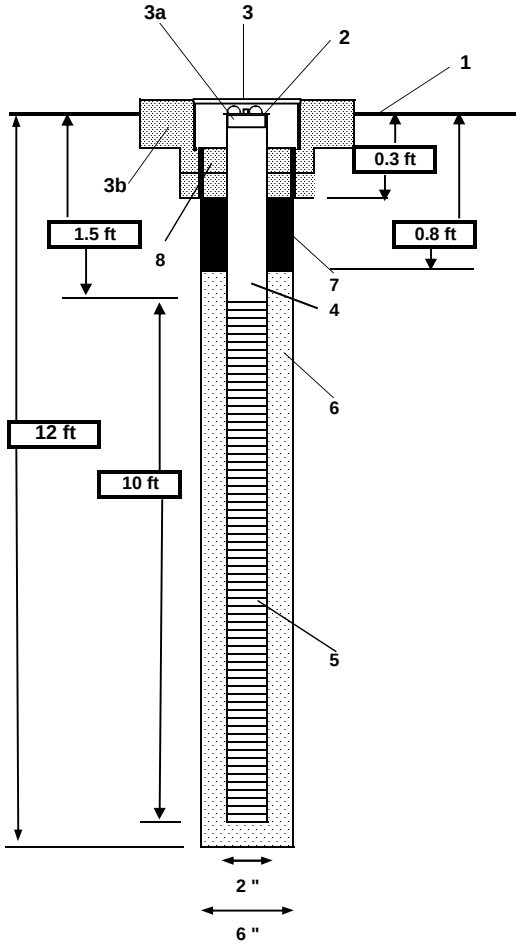

1-	Ground elevation at well	17.24 ft msl
2-	Top of casing elevation	17.07 ft msl
3-	Wellhead protection cover type	8 inch Manhole
	a) locking expansion plug	Installed
	b) concrete pad dimensions	2 ft x 2 ft x 0.7 ft
4-	Dia./type of well casing	2 inch schedule 40 PVC
5-	Type/slot size of screen	.010" machince slot
6-	Type screen filter	NSF #2 Sand
	a) Quantity used	5.5 50 lb bags
7-	Type of seal	Enviroplug Medium Bentonite Pellets
8-	Grout	
	a) Grout mix used	Concrete
	Development method	Over Pump and Surge (whale pump)

PROJECT NUMBER	WELL NUMBER	
388283.FI.WI	AS116-MW02	SHEET 1 OF 1

WELL COMPLETION DIAGRAM

PROJECT : CTO-74, Expanded Site Investigation LOCATION : MCAS New River, Building AS116

DRILLING CONTRACTOR : ARM

DRILLING METHOD AND EQUIPMENT USED 4.25" HSA with split spoons (Foremost Model B61)

DEPTH TO WATER: 2.08' BTOC START : 8/11/09; 1110 END : 8/11/09; 1325 LOGGER : Brooke Propst

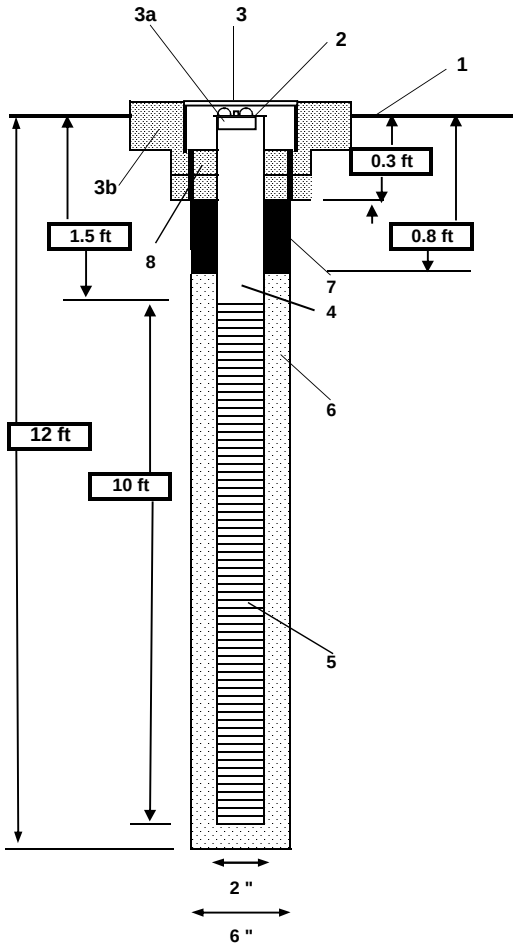

1-	Ground elevation at well	18.07 ft msl
2-	Top of casing elevation	17.84 ft msl
3-	Wellhead protection cover type	8 inch Manhole
	a) locking expansion plug	Installed
	b) concrete pad dimensions	2 ft x 2 ft x 0.7 ft
4-	Dia./type of well casing	2 inch schedule 40 PVC
5-	Type/slot size of screen	.010" machince slot
6-	Type screen filter	NSF #2 Sand
	a) Quantity used	5.5 50lb bags
7-	Type of seal	Enviroplug Medium Bentonite Pellets
8-	Grout	
	a) Grout mix used	Concrete
	Development method	Over Pump and Surge (whale pump)

PROJECT NUMBER	WELL NUMBER	
388283.FI.WI	AS116-MW03	SHEET 1 OF 1

WELL COMPLETION DIAGRAM

PROJECT : CTO-74, Expanded Site Investigation LOCATION : MCAS New River, Building AS116

DRILLING CONTRACTOR : ARM

DRILLING METHOD AND EQUIPMENT USED 4.25" HAS with split spoons (Foremost Model B61)

DEPTH TO WATER: 2.13 ft BTOC START : 8/11/09; 1348 END : 8/11/09; 1458 LOGGER : Brooke Propst

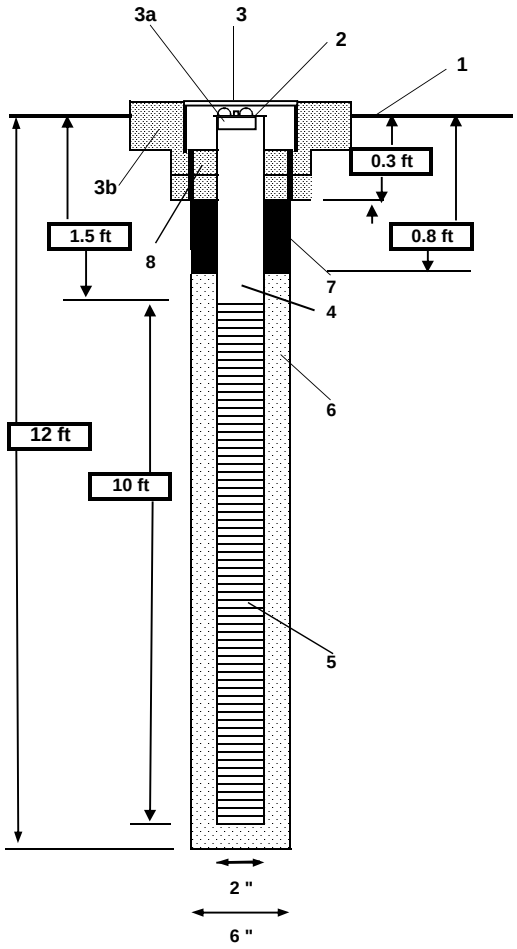

1-	Ground elevation at well	18.31 ft msl
2-	Top of casing elevation	18.02 ft msl
3-	Wellhead protection cover type	8 inch Manhole
	a) locking expansion plug	Installed
	b) concrete pad dimensions	2 ft x 2 ft x 0.7 ft
4-	Dia./type of well casing	2 inch schedule 40 PVC
5-	Type/slot size of screen	.010" machince slot
6-	Type screen filter	NSF #2 Sand
	a) Quantity used	5 50lb bags
7-	Type of seal	Enviroplug Medium Bentonite Pellets
8-	Grout	
	a) Grout mix used	Concrete
	Development method	Over Pump and Surge (whale pump)

PROJECT NUMBER	WELL NUMBER	
388283.FI.WI	AS119-MW01	SHEET 1 OF 1

WELL COMPLETION DIAGRAM

PROJECT : CTO-74, Expanded Site Investigation LOCATION : MCAS New River, Building AS119

DRILLING CONTRACTOR : ARM

DRILLING METHOD AND EQUIPMENT USED 4.25" HSA with split spoons (Foremost Model B61)

DEPTH TO WATER: 2.86 ft BTOC START : 8/13/09; 0747 END : 8/13/09; 0850 LOGGER : Brooke Propst

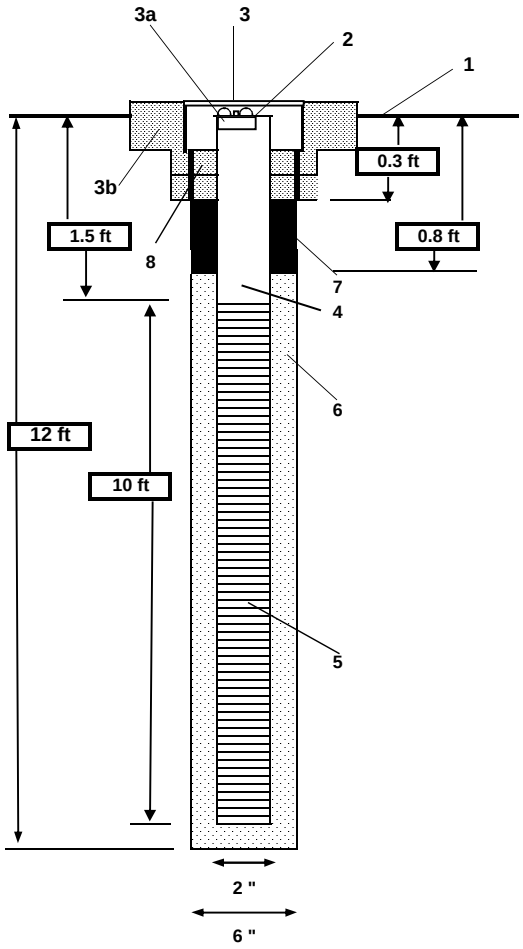

1-	Ground elevation at well	19.08 ft msl
2-	Top of casing elevation	18.76 ft msl
3-	Wellhead protection cover type	8 inch Manhole
	a) locking expansion plug	Installed
	b) concrete pad dimensions	2 ft x 2 ft x 0.7 ft
4-	Dia./type of well casing	2 inch schedule 40 PVC
5-	Type/slot size of screen	.010 in machine slot
6-	Type screen filter	NSF #2 Sand
	a) Quantity used	5 50lb bags
7-	Type of seal	Enviroplug Medium Bentonite Pellets
8-	Grout	
	a) Grout mix used	Concrete
	Development method	Over Pump and Surge (whale pump)

PROJECT NUMBER	WELL NUMBER	
388283.FI.WI	AS119-MW02	SHEET 1 OF 1

WELL COMPLETION DIAGRAM

PROJECT : CTO-74, Expanded Site Investigation LOCATION : MCAS New River, Building AS119

DRILLING CONTRACTOR : ARM

DRILLING METHOD AND EQUIPMENT USED 4.25" HSA with split spoons (Foremost Model B61)

DEPTH TO WATER: 1.12 ft BTOC START : 8/13/09; 0943 END : 8/13/09; 1050 LOGGER : Brooke Propst

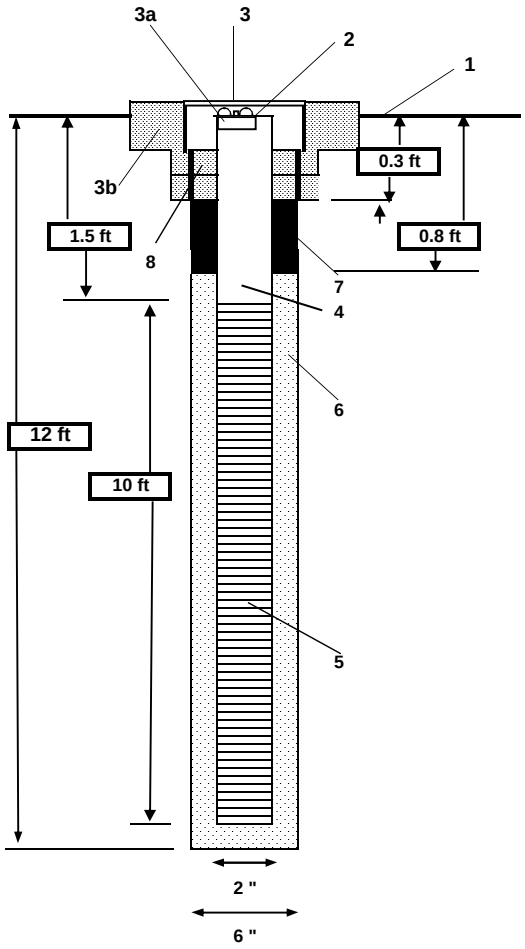

1-	Ground elevation at well	18.73 ft msl
2-	Top of casing elevation	18.43 ft msl
3-	Wellhead protection cover type	8 inch Manhole
	a) locking expansion plug	Installed
	b) concrete pad dimensions	2 ft x 2 ft x 0.7 ft
4-	Dia./type of well casing	2 inch schedule 40 PVC
5-	Type/slot size of screen	.010 in machine slot
6-	Type screen filter	NSF #2 Sand
	a) Quantity used	5 50lb bags
7-	Type of seal	Enviroplug Medium Bentonite Pellets
8-	Grout	
	a) Grout mix used	Concrete
	Development method	Over Pump and Surge (whale pump)

PROJECT NUMBER	WELL NUMBER	
388283.FI.WI	AS119-MW03	SHEET 1 OF 1

WELL COMPLETION DIAGRAM

PROJECT : CTO-74, Expanded Site Investigation LOCATION : MCAS New River, Building AS119

DRILLING CONTRACTOR : ARM

DRILLING METHOD AND EQUIPMENT USED 4.25" HSA with split spoons (Foremost Model B61)

DEPTH TO WATER: 1.93 ft BTOC START : 8/13/09; 1430 END : 8/13/09; 1530 LOGGER : Brooke Propst

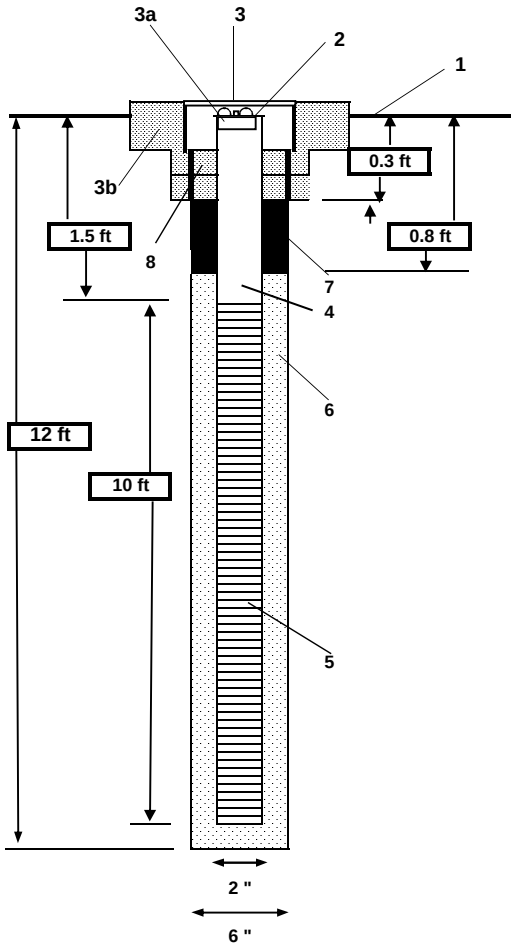

1-	Ground elevation at well	19.10 ft msl
2-	Top of casing elevation	18.80 ft msl
3-	Wellhead protection cover type	8 inch Manhole
	a) locking expansion plug	Installed
	b) concrete pad dimensions	2 ft x 2 ft x 0.7 ft
4-	Dia./type of well casing	2 inch schedule 40 PVC
5-	Type/slot size of screen	.010 in machine slot
6-	Type screen filter	NSF #2 Sand
	a) Quantity used	5 50lb bags
7-	Type of seal	Enviroplug Medium Bentonite Pellets
8-	Grout	
	a) Grout mix used	Concrete
	Development method	Over Pump and Surge (whale pump)

Appendix C
Chain of Custody Forms

Katahdin ANALYTICAL SERVICES
600 Technology Way
Scarborough, ME 04074
Tel: (207) 874-2400
Fax: (207) 775-4029

CHAIN of CUSTODY

PLEASE BEAR DOWN AND PRINT LEGIBLY IN PEN

Client: CH2M Hill
Contact: Gwen Buckley
Phone #: (757) 671-8311
Fax #: ( )
Address: 5700 Cleveland St
City: Virginia Beach
State: VA
Zip Code: 23462
Purchase Order #:
Proj. Name / No.: CTO-74
Katahdin Quote #:
Bill (if different than above): Per Contract
Address:
Sampler (Print / Sign): Brooke Propst Brooke Propst
Copies To:

LAB USE ONLY
WORK ORDER #: SL4864
KATAHDIN PROJECT NUMBER:

REMARKS:

SHIPPING INFO: ☐ FED EX ☐ UPS ☐ CLIENT
AIRBILL NO:
TEMP°C ☐ TEMP BLANK ☐ INTACT ☐ NOT INTACT

ANALYSIS AND CONTAINER TYPE PRESERVATIVES

Sample Description	Date / Time coll'd	Matrix	No. of Cntrs.	Total Metals (Pb, Fe, Cr) 6010B 6020	Dissolved Metals (Pb Fe Cr, As) 6010B 6020	Total Metals (As Cr, Pb, F) 6010B 6020	Dissolved Metals (Fe, Pb, Cr) 6010B 6020						
				Filt. ☐Y ☐N	Filt. ☐Y ☐N	Filt. ☐Y ☐N	Filt. ☐Y ☐N	Filt. ☐Y ☐N	Filt. ☐Y ☐N	Filt. ☐Y ☐N	Filt. ☐Y ☐N	Filt. ☐Y ☐N	Filt. ☐Y ☐N
SAS113-GW02-09C	8/18/09/1255	GW	1	X									
SAS113-GW02D-09C	" /1300		1	X									
AS116-GW03-09C	" /1540		1			X							
AS116-GW02-09C	" /1625		1			X							
AS116-GW02D-09C	" /1630		1			X							
AS116-GW01-09C	" /1745		2		X	X							
AS116-GW01-09C-MS	" /1745		2		X	X							
AS116-GW01-09C-SD	" /1745		2		X	X							
AS119-GW02-09C	8/19/09/0910		2	X			X						
AS119-GW02D-09C	" /0915		2	X			X						
CTO74-EB01-081909	" /0955	EB	1	X									
AS119-GW01-09C	" /1120	GW	1	X									
SAS113-GW01-09C	" /1250		2	X			X						
SAS113-GW03-09C	" /1340		1	X									
SAS113-GW03-09C-MS	" /1340		1	X									
SAS113-GW03-09C-SD	" /1340		1	X									

COMMENTS

8-20-09

Relinquished By: (Signature)	Date / Time	Received By: (Signature)	Relinquished By: (Signature)	Date / Time	Received By: (Signature)
Brooke Propst	8/19 1500	[illegible]			
Relinquished By: (Signature)	Date / Time	Received By: (Signature)	Relinquished By: (Signature)	Date / Time	Received By: (Signature)
					0000008

THE TERMS AND CONDITIONS ON THE REVERSE SIDE HEREOF SHALL GOVERN SERVICES, EXCEPT WHEN A SIGNED CONTRACTUAL AGREEMENT EXISTS

ORIGINAL

Katahdin ANALYTICAL SERVICES
600 Technology Way
Scarborough, ME 04074
Tel: (207) 874-2400
Fax: (207) 775-4029

CHAIN of CUSTODY

PLEASE BEAR DOWN AND PRINT LEGIBLY IN PEN

Client | Contact | Phone # ( ) | Fax # ( )

Address | City | State | Zip Code

Purchase Order # | Proj. Name / No. | Katahdin Quote #

See Page 1

Bill (if different than above) | Address

Sampler (Print / Sign) | Copies To:

LAB USE ONLY WORK ORDER #: SL4864

KATAHDIN PROJECT NUMBER

REMARKS:

SHIPPING INFO: ☐ FED EX ☐ UPS ☐ CLIENT

AIRBILL NO:

TEMP°C ☐ TEMP BLANK ☐ INTACT ☐ NOT INTACT

ANALYSIS AND CONTAINER TYPE PRESERVATIVES

*	Sample Description	Date / Time coll'd	Matrix	No. of Cntrs.	Total Metals (Pb, Fe, Cr) 6012B/6020 Filt. ☐Y ☐N	Dissolved Metals (Pb, Fe, Cr) 6010B/6020 Filt. ☐Y ☐N	Filt. ☐Y ☐N	Filt. ☐Y ☐N	Filt. ☐Y ☐N	Filt. ☐Y ☐N	Filt. ☐Y ☐N	Filt. ☐Y ☐N	Filt. ☐Y ☐N	Filt. ☐Y ☐N
	CT074-EB02-080909	8/19 / 1350	EB	2	X	X								
	AS119-GW03-09C	8/19 / 1040	KG	3	✓			MS/MSD						
		/												
		/												
		/												
		/												
		/												
		/												
		/												
		/												
		/												
		/												
		/												
		/												
		/												

COMMENTS

Relinquished By: (Signature)	Date / Time	Received By: (Signature)	Relinquished By: (Signature)	Date / Time	Received By: (Signature)
[illegible]	8/19 1500				
Relinquished By: (Signature)	Date / Time	Received By: (Signature)	Relinquished By: (Signature)	Date / Time	Received By: (Signature)
					0000009

THE TERMS AND CONDITIONS ON THE REVERSE SIDE HEREOF SHALL GOVERN SERVICES, EXCEPT WHEN A SIGNED CONTRACTUAL AGREEMENT EXISTS

Katahdin ANALYTICAL SERVICES
600 Technology Way
Scarborough, ME 04074
Tel: (207) 874-2400
Fax: (207) 775-4029

CHAIN of CUSTODY

PLEASE BEAR DOWN AND PRINT LEGIBLY IN PEN

Page ____ of ____

Client: CH2M Hill
Contact: Gwen Buckley
Phone #: ( )
Fax #: ( )
Address:
City: Virginia Beach
State: VA
Zip Code:
Purchase Order #:
Proj. Name / No.: CTO-74
Katahdin Quote #:
Bill (if different than above): Per Contract
Address:
Sampler (Print / Sign): Brooke Propst Brook Rue
Copies To:

LAB USE ONLY
WORK ORDER #:
KATAHDIN PROJECT NUMBER: SC4863

REMARKS:

SHIPPING INFO: ☐ FED EX ☐ UPS ☐ CLIENT
AIRBILL NO:
TEMP°C ____ ☐ TEMP BLANK ☐ INTACT ☐ NOT INTACT

ANALYSIS AND CONTAINER TYPE PRESERVATIVES

*	Sample Description	Date / Time coll'd	Matrix	No. of Cntrs.	TCLP VOC Filt. ☐Y ☐N	TCLP RFC Filt. ☐Y ☐N	Filt. ☐Y ☐N	Filt. ☐Y ☐N	Filt. ☐Y ☐N	Filt. ☐Y ☐N	Filt. ☐Y ☐N	Filt. ☐Y ☐N	Filt. ☐Y ☐N	Filt. ☐Y ☐N
	SAS113-IDW-AQ	8/19/09/1435	AQ	6	X	X								
	SAS113-IDW-SO	" /1455	SO	2	X	X								
	AS116-IDW-SO	" /1510	SO	2	X	X								
	AS116-IDW-SO	" /1515	SO	2	X	X								
	AS116-IDW-AQ	" /1530	AQ	6	X	X								
	AS119-IDW-AQ	" /1550	AQ	6	X	X								
		/												
		/												
		/												
		/												
		/												
		/												
		/												
		/												
		/												

OMMENTS

8-20-09 1000

Relinquished By: (Signature)	Date / Time	Received By: (Signature)	Relinquished By: (Signature)	Date / Time	Received By: (Signature)
Brook Rue	8/19/1600	[illegible]			
Relinquished By: (Signature)	Date / Time	Received By: (Signature)	Relinquished By: (Signature)	Date / Time	Received By: (Signature)

0000012

THE TERMS AND CONDITIONS ON THE REVERSE SIDE HEREOF SHALL GOVERN

Katahdin ANALYTICAL SERVICES
600 Technology Way
Scarborough, ME 04074
Tel: (207) 874-2400
Fax: (207) 775-4029

CHAIN of CUSTODY

PLEASE BEAR DOWN AND PRINT LEGIBLY IN PEN

Client: CH2M HILL
Contact: GWENDOLYN
Phone #: (757) 671-6284
Fax #: ( )
Address: 5700 CLEVELAND ST
City: VA BEACH
State: VA
Zip Code:
Purchase Order #:
Proj. Name / No.: CTO-74 / SITE 89
Katahdin Quote #:
Bill (if different than above):
Address:
Sampler (Print / Sign): DAVID LUPCA
Copies To: MONICA FULKERSON

LAB USE ONLY
WORK ORDER #: SC 4863-4
KATAHDIN PROJECT NUMBER:
REMARKS: PROJ #: 388283.F1.FS

SHIPPING INFO: ☒ FED EX ☐ UPS ☐ CLIENT
AIRBILL NO: 8703 1976 3031
TEMP°C: ☒ TEMP BLANK ☐ INTACT ☐ NOT INTACT

ANALYSIS AND CONTAINER TYPE PRESERVATIVES

*	Sample Description	Date / Time coll'd	Matrix	No. of Cntrs.	FULL TCLP-VOC (Filt. ☐Y ☒N)	IGNITABILITY (Filt. ☐Y ☒N)	CORROSIVITY (Filt. ☐Y ☒N)	REACTIVITY - CYANIDE (Filt. ☐Y ☒N)	REACTIVITY - SULFIDE (Filt. ☐Y ☒N)	Filt. ☐Y ☐N	Filt. ☐Y ☐N	Filt. ☐Y ☐N	Filt. ☐Y ☐N	Filt. ☐Y ☐N
	SAS113-IDW-082009-SO	082009 / 0945	SOIL	2	✓	✓	✓	✓	✓					
		/												
		/												
		/												
		/												
		/												
		/												
		/												
		/												
		/												
		/												
		/												
		/												
		/												
		/												
		/												

COMMENTS

Relinquished By: (Signature)	Date / Time	Received By: (Signature)	Relinquished By: (Signature)	Date / Time	Received By: (Signature)
		[signature] 8/21/09 0940			
Relinquished By: (Signature)	Date / Time	Received By: (Signature)	Relinquished By: (Signature)	Date / Time	Received By: (Signature)
				00 00013	

THE TERMS AND CONDITIONS ON THE REVERSE SIDE HEREOF SHALL GOVERN

ORIGINAL

Appendix D
Analytical Results

TABLE D-1
Validated Groundwater Raw Analytical Results
CTO-74 SAS113
Camp Lejeune, August 2009

Station ID	SAS113-MW01	SAS113-MW02		SAS113-MW03
Sample ID	SAS113-GW01-09C	SAS113-GW02-09C	SAS113-GW02D-09C	SAS113-GW03-09C
Sample Date	08/19/09	08/18/09	08/18/09	08/19/09
Chemical Name				
Total Metals (µg/L)				
Chromium	3 U	3 U	3 U	3 U
Iron	6,310	7,850	7,870	6,060
Lead	1 U	1 U	1 U	1 U
Dissolved Metals (µg/L)				
Chromium, Dissolved	3 U	NA	NA	NA
Iron, Dissolved	6,210	NA	NA	NA
Lead, Dissolved	1 U	NA	NA	NA

Notes:

Shading indicates detections

NA - Not analyzed

J - Analyte present, value may or may not be accurate or precise

R - Unreliable Result

U - The material was analyzed for, but not detected

UJ - Analyte not detected, quantitation limit may be inaccurate

µg/L - micrograms per Liter

TABLE D-2
Validated Groundwater Raw Analytical Results
CTO-74 AS116
Camp Lejeune, August 2009

Station ID	AS116-MW01	AS116-MW02		AS116-MW03
Sample ID	AS116-GW01-09C	AS116-GW02-09C	AS116-GW02D-09C	AS116-GW03-09C
Sample Date	08/18/09	08/18/09	08/18/09	08/18/09
Chemical Name				
Total Metals (µg/L)				
Arsenic	5 J	8 U	8 U	8 U
Chromium	3 U	3 U	3 U	3 U
Iron	5,910	6,700	6,820	4,630
Lead	1 U	1 U	1 U	1 U
Dissolved Metals (µg/L)				
Arsenic, Dissolved	8 U	NA	NA	NA
Chromium, Dissolved	3 U	NA	NA	NA
Iron, Dissolved	6,210	NA	NA	NA
Lead, Dissolved	1 U	NA	NA	NA

Notes:

Shading indicates detections

NA - Not analyzed

J - Analyte present, value may or may not be accurate or precise

U - The material was analyzed for, but not detected

µg/L - micrograms per Liter

TABLE D-3
Validated Groundwater Raw Analytical Results
CTO-74 AS119
Camp Lejeune, August 2009

Station ID	AS119-MW01	AS119-MW02		AS119-MW03
Sample ID	AS119-GW01-09C	AS119-GW02-09C	AS119-GW02D-09C	AS119-GW03-09C
Sample Date	08/19/09	08/19/09	08/19/09	08/19/09
Chemical Name				
Total Metals (µg/L)				
Chromium	3 U	3 U	3 U	3 U
Iron	2,080	211 J	209 J	999 J
Lead	1 U	1 U	1 U	1 U
Dissolved Metals (µg/L)				
Chromium, Dissolved	NA	3 U	3 U	NA
Iron, Dissolved	NA	193	169	NA
Lead, Dissolved	NA	1 U	1 U	NA

Notes:

Shading indicates detections

NA - Not analyzed

J - Analyte present, value may or may not be accurate or precise

R - Unreliable Result

U - The material was analyzed for, but not detected

UJ - Analyte not detected, quantitation limit may be inaccurate

µg/L - micrograms per Liter

Appendix E
Human Health Risk Screening

TABLE 2.1
OCCURRENCE, DISTRIBUTION AND SELECTION OF CHEMICALS OF POTENTIAL CONCERN
Building SAS113
MCB CamLej, North Carolina

Scenario Timeframe:Future
Medium: Groundwater
Exposure Medium: Groundwater

Exposure Point	CAS Number	Chemical	Minimum [1] Concentration Qualifier	Maximum [1] Concentration Qualifier	Units	Location of Maximum Concentration	Detection Frequency	Range of Detection Limits	Concentration [2] Used for Screening	Background [3] Value	Screening [4] Toxicity Value	Potential ARAR/TBC Value	Potential ARAR/TBC Source	COPC Flag	Rationale for [5] Contaminant Deletion or Selection
SAS113															
	7440-47-3	Chromium	3.0E+00 U	3.0E+00 U	UG_L		0/3	3	3.0E+00	3.1E+00	1.1E+01 N	1.0E+02	MCL	NO	DLBSL
	7439-89-6	Iron	6.1E+03	7.9E+03	UG_L	SAS113-GW02-09C	3/3	100	7.9E+03	6.0E+03	2.6E+03 N	3.0E+02	2MCL, 15A NCAC 2L	YES	ASL
	7439-92-1	Lead	1.0E+00 U	1.0E+00 U	UG_L		0/3	1	1.0E+00	2.8E+00	1.5E+01	1.5E+01	MCL, 15A NCAC 2L	NO	DLBSL

[1] Minimum/Maximum detected concentration. Unfiltered results for metals following EPA Region 4 human health risk assessment methodology.
[2] Maximum concentration is used for screening.
[3] Background values are two times the arithmetic mean basewide background shallow groundwater concentrations.
Background values are from *Draft Base Background Groundwater Study, Marine Corps Base, Camp Lejeune, North Carolina* . Baker Environmental, 2002.
[4] Oak Ridge National Laboratory (ORNL). May, 2009. Regional Screening Levels for Chemical Contaminants at Superfund Sites. [Online].
Tap Water RSL, adjusted for noncarcinogens (divided by 10) to account for exposure to more than one constituent.
[5]

Rationale Codes
Selection Reason: Above Screening Levels (ASL)
Deletion Reason: No Toxicity Information (NTX)
Essential Nutrient (NUT)
Below Screening Level (BSL)
Below Background Level (BBL)
Detection Limit Below Screening Level (DLBSL)

MCL = Maximum Contaminant Level from EPA's National Primary Drinking Water Standards
2MCL = Secondary MCL
15A NCAC 2L = North Carolina Classifications and Groundwater Quality Standards, Amended December 2006.
COPC = Chemical of Potential Concern
ARAR/TBC = Applicable or Relevant and Appropriate Requirement/ To Be Considered
J = Estimated Value
U = Not detected
C = Carcinogenic
N = Noncarcinogenic

TABLE 2.1a

Risk Ratio Screening for Groundwater, Maximum Detected Concentration

Building SAS113

MCB CamLej, North Carolina

Analyte	Detection Frequency	Maximum Detected Concentration (Qualifier)	Sample Location of Maximum Detected Concentration	Tap Water RSL	Acceptable Risk Level	Corresponding Hazard Index[a]	Corresponding Cancer Risk[b]	Target Organ
Iron	3 / 3	7.9E+03	SAS113-GW02-09C	2.6E+04	1	0.3	NA	Gastrointestinal
Cumulative Corresponding Hazard Index[c]						**0.3**		
Cumulative Corresponding Cancer Risk[d]								
						Total Gastrointestinal HI =		0.3

[a] Corresponding Hazard Index equals Maximum Detected concentration divided by the RSL divided by the acceptable risk level.

[b] Corresponding Cancer Risk equals Maximum Detected concentration divided by the RSL divided by the acceptable risk level

[c] Cumulative Corresponding Hazard Index equals sum of Corresponding Hazard Indices for each constituent.

[d] Cumulative Corresponding Cancer Risk equals sum of Corresponding Cancer Risks for each constituent.

Constituent selected as COPC if it contributes to an overall Hazard Index by target organ greater than 0.5 or Cumulative Corresponding Cancer Risk greater than 5E-05, otherwise, constituent not selected as COPC.

Constituents selected as COPCs are indicated by shading.

COPC = Constituent of Potential Concern

HI = Hazard Index

J = Estimated Value

ug/L = micrograms per liter

NA = Not available/not applicable.

TABLE 2.2

OCCURRENCE, DISTRIBUTION AND SELECTION OF CHEMICALS OF POTENTIAL CONCERN

Building SAS116

MCB CamLej, North Carolina

Scenario Timeframe:Future
Medium: Groundwater
Exposure Medium: Groundwater

Exposure Point	CAS Number	Chemical	Minimum [1] Concentration Qualifier	Maximum [1] Concentration Qualifier	Units	Location of Maximum Concentration	Detection Frequency	Range of Detection Limits	Concentration [2] Used for Screening	Background [3] Value	Screening [4] Toxicity Value	Potential ARAR/TBC Value	Potential ARAR/TBC Source	COPC Flag	Rationale for [5] Contaminant Deletion or Selection
SAS116															
	7440-38-2	Arsenic	5.0E+00 J	5.0E+00 J	UG_L	AS116-GW01-09C	1/3	8	5.0E+00	5.8E+00	4.5E-02 C	1.0E+01	MCL	NO	BBL
												5.0E+01	15A NCAC 2L		
	7440-47-3	Chromium	3.0E+00 U	3.0E+00 U	UG_L		0/3	3	3.0E+00	3.1E+00	1.1E+01 N	1.0E+02	MCL	NO	DLBSL
	7439-89-6	Iron	4.6E+03	6.8E+03	UG_L	AS116-GW02-09C	3/3	100	6.8E+03	6.0E+03	2.6E+03 N	3.0E+02	2MCL, 15A NCAC 2L	YES	ASL
	7439-92-1	Lead	1.0E+00 U	1.0E+00 U	UG_L		0/3	1	1.0E+00	2.8E+00	1.5E+01	1.5E+01	MCL, 15A NCAC 2L	NO	DLBSL

[1] Minimum/Maximum detected concentration. Unfiltered results for metals following EPA Region 4 human health risk assessment methodology.

[2] Maximum concentration is used for screening.

[3] Background values are two times the arithmetic mean basewide background shallow groundwater concentrations.
Background values are from *Draft Base Background Groundwater Study, Marine Corps Base, Camp Lejeune, North Carolina* . Baker Environmental, 2002.

[4] Oak Ridge National Laboratory (ORNL). May, 2009. Regional Screening Levels for Chemical Contaminants at Superfund Sites. [Online].
Tap Water RSL, adjusted for noncarcinogens (divided by 10) to account for exposure to more than one constituent.

[5]

Rationale Codes

Selection Reason: Above Screening Levels (ASL)

Deletion Reason:
No Toxicity Information (NTX)
Essential Nutrient (NUT)
Below Screening Level (BSL)
Below Background Level (BBL)
Detection Limit Below Screening Level (DLBSL)

MCL = Maximum Contaminant Level from EPA's National Primary Drinking Water Standards
2MCL = Secondary MCL
15A NCAC 2L = North Carolina Classifications and Groundwater Quality Standards, Amended December 2006.
COPC = Chemical of Potential Concern
ARAR/TBC = Applicable or Relevant and Appropriate Requirement/ To Be Considered
J = Estimated Value
U = Not detected
C = Carcinogenic
N = Noncarcinogenic

TABLE 2.2a

Risk Ratio Screening for Groundwater, Maximum Detected Concentration

Building SAS116

MCB CamLej, North Carolina

Analyte	Detection Frequency	Maximum Detected Concentration (Qualifier)	Sample Location of Maximum Detected Concentration	Tap Water RSL	Acceptable Risk Level	Corresponding Hazard Index[a]	Corresponding Cancer Risk[b]	Target Organ
Iron	3 / 3	6.8E+03	AS116-GW02-09C	2.6E+04	1	0.3	NA	Gastrointestinal
Cumulative Corresponding Hazard Index[c]						**0.3**		
Cumulative Corresponding Cancer Risk[d]								
						Total Gastrointestinal HI =		0.3

[a] Corresponding Hazard Index equals Maximum Detected concentration divided by the RSL divided by the acceptable risk level.

[b] Corresponding Cancer Risk equals Maximum Detected concentration divided by the RSL divided by the acceptable risk level

[c] Cumulative Corresponding Hazard Index equals sum of Corresponding Hazard Indices for each constituent.

[d] Cumulative Corresponding Cancer Risk equals sum of Corresponding Cancer Risks for each constituent.

Constituent selected as COPC if it contributes to an overall Hazard Index by target organ greater than 0.5 or Cumulative Corresponding Cancer Risk greater than 5E-05, otherwise, constituent not selected as COPC.

Constituents selected as COPCs are indicated by shading.

COPC = Constituent of Potential Concern

HI = Hazard Index

J = Estimated Value

ug/L = micrograms per liter

NA = Not available/not applicable.