04.05-07/19/93-01512

FINAL

REMEDIAL ACTION WORK PLAN FOR THE HADNOT POINT INDUSTRIAL AREA SHALLOW AQUIFER

MARINE CORPS BASE, CAMP LEJEUNE, NORTH CAROLINA

CONTRACT TASK ORDER 0134

Prepared For:

DEPARTMENT OF THE NAVY
ATLANTIC DIVISION
NAVAL FACILITIES
ENGINEERING COMMAND
Norfolk, Virginia

Under the:

LANTDIV CLEAN Program
Contract N62470-89-D-4814

Prepared By:

BAKER ENVIRONMENTAL, INC.
Coraopolis, Pennsylvania

JULY 19, 1993

TABLE OF CONTENTS

		Page
1.0	INTRODUCTION	1-1
1.1	Objectives of the Remedial Action Work Plan	1-1
1.2	Roles and Relationships of Remedial Action Participants	1-1
1.3	Report Organization	1-3
2.0	BACKGROUND AND SETTING	2-1
2.1	Site Location	2-1
2.2	Site Description	2-1
2.3	Hydrogeology	2-4
2.4	Investigation and Study History	2-4
2.5	Nature and Extent of Contamination	2-6
3.0	REMEDIAL ACTION DESIGN	3-1
3.1	Description of the Groundwater Recovery and Treatment System	3-1
3.2	Remediation Goals and Operating Parameters	3-4
4.0	REMEDIAL ACTION IMPLEMENTATION	4-1
4.1	Description of Remedial Action Contractor's Responsibilities	4-1
4.2	Preparation of Project Plans	4-2
4.3	Equipment Procurement	4-2
4.4	Permit Procurement	4-3
4.5	Preconstruction Meeting	4-4
4.6	System Construction	4-4
4.7	Construction Completion and Acceptance	4-4
4.8	System Start-Up	4-5
4.9	Normal System Operation	4-6
4.10	Remedial Action Modifications	4-6
4.11	Remedial Action Completion and Closeout	4-7
5.0	OPERATION AND MAINTENANCE PLAN	5-1
5.1	Required Contents of the Operation and Maintenance Plan	5-1
5.2	Implementation and Schedule of the Operation and Maintenance Plan	5-3
6.0	HEALTH AND SAFETY PLAN	6-1
7.0	SAMPLING AND ANALYSIS PLAN	7-1
7.1	Start-up Phase Sampling and Analysis	7-1
7.2	Long-Term Sampling and Analysis	7-1
8.0	QUALITY ASSURANCE PROJECT PLAN	8-1
8.1	Construction Phase QAPP	8-1
8.2	Operational Phase QAPP	8-2
9.0	ENVIRONMENTAL MONITORING PLAN	9-1
10.0	PROJECT SCHEDULE	10-1

LIST OF TABLES

Number		Page
2-1	Summary of Contaminants of Concern Detected in the Shallow Groundwater Aquifer, January 1991	2-7
3-1	Federal and State Criteria for the Contaminants of Concern Identified for the Shallow Aquifer	3-5
3-2	Estimated Treatment System Influent and Effluent Concentrations in the Shallow Aquifer at HPIA	3-6
5-1	Example Outline for a Detailed O&M Plan	5-2
6-1	Example Outline for a Health and Safety Plan	6-2
7-1	Example Outline for a Sampling and Analysis Plan	7-2
7-2	Analytical Requirements Summary Table	7-4
8-1	Example Outline for a Quality Assurance Project Plan Pertaining to Sampling and Analysis Activities	8-3

LIST OF FIGURES

Number		Page
1-1	Roles and Relationships of Remedial Action Participants	1-4
2-1	Location Map	2-2
2-2	Site and Shallow Groundwater Contour Map	2-3
2-3	Approximate Area of Groundwater Contamination in the Shallow Aquifer	2-9
3-1	Hadnot Point Industrial Area Shallow Aquifer Groundwater Treatment System	3-2
7-1	Sampling Scheme for the Groundwater Treatment Systems at HPIA	7-3
7-2	Monitoring Wells Included in the Long-Term Monitoring Program - HPIA	7-7
10-1	Proposed Construction Schedule	10-2

LIST OF APPENDICES

A Section 01400 Quality Control

1.0 INTRODUCTION

This report presents the Remedial Action (RA) Work Plan prepared for the Interim Remedial Action (IRA) associated with the shallow aquifer at the Hadnot Point Industrial Area (HPIA) located within Marine Corps Base Camp Lejeune, Jacksonville, North Carolina. This Work Plan has been prepared by Baker Environmental, Inc. (Baker) under the Department of the Navy (DoN) Atlantic Division Naval Facilities Engineering Command (LANTDIV) CLEAN Program for Contract Task Order 0134.

The RA Work Plan addresses the requirements of RA implementation as provided in USEPA's "Superfund Remedial Design and Remedial Action Guidance (OSWER Directive 9355.0-4A, June 1986)." The intent of this document is to present the scope of work necessary to execute a technically sound, cost-effective RA that achieves the objectives of the Remedial Design (RD).

The level of detail provided in this RA Work Plan varies according to the current information available. As the project progresses and decisions are made regarding specific details of the RD, this RA Work Plan will be revised as appropriate.

1.1 Objectives of the Remedial Action Work Plan

The objectives of the RA Work Plan are:

- Identify the principal roles and participants in the RA.
- Identify the principal elements of the RA.
- Outline the RA Contractor's project responsibilities.
- Present guidelines for the preparation of project plans.
- Provide criteria for final project acceptance.

1.2 Roles and Relationships of Remedial Action Participants

The execution of a successful RA requires input and coordination from the various participants that have been involved with the development of the selected remedial alternative, as well as from the participants who will be responsible for its implementation. These participants are listed below, along with a brief description of their responsibilities in this RA:

The HPIA Shallow Aquifer Operable Unit is one of a number of sites at Marine Corps Base Camp Lejeune that is included in the Federal Facilities Agreement (FFA). The Department of the Navy (DoN) is the lead agency charged with the responsibility of overseeing remediation activities at the site.

- Lead Agency Project Coordinator

LANTDIV Code 18 is the overall Project Coordinator for this action and is charged with organizing and administering the remedial action.

Assisting Code 18 is: LANTDIV Code 02, Contracts, which is responsible for procuring the Remedial Design Professional for the project; and LANTDIV Code 03, Project Management, who provides project management support to Code 18.

- Remedial Design Professional

Baker Environmental, Inc., under contract to LANTDIV, is the remedial design professional for this project. Baker is providing plans and specifications for the construction of the RA.

- Resident Engineer

On-site engineering support for the project will be provided by the Resident Officer In Charge of Construction (ROICC), through the Public Works Office located on base. The ROICC will monitor the day-to-day progress of the remedial action constructor. Additional construction management support will be provided by LANTDIV Code 05, Construction Management.

- Remedial Action Constructor

Construction of the groundwater treatment system will be the responsibility of the remedial action constructor (or contractor). The remedial action constructor will be contracted by LANTDIV, Code 05, Construction Management, through the ROICC Office located on the base.

- Independent Quality Assurance Team

  In accordance with the contract specifications, the Remedial Action Constructor is required to hire an independent quality assurance team for this project. This team will be approved by the ROICC. The team will monitor the construction activities and document that quality assurance requirements for the project are met.

The relationship of these participants is presented in the organization chart shown on Figure 1-1.

1.3 Report Organization

The RA Work Plan is organized into ten sections including this Section 1.0 - Introduction. The remainder of the document is comprised as follows:

- Section 2.0 - Background and Setting
- Section 3.0 - Remedial Action Design
- Section 4.0 - Remedial Action Implementation
- Section 5.0 - Operation and Maintenance Plan
- Section 6.0 - Health and Safety Plan
- Section 7.0 - Sampling and Analysis Plan
- Section 8.0 - Quality Assurance Project Plan
- Section 9.0 - Environmental Monitoring Plan
- Section 10.0 - Project Schedule

Sections 2.0 and 3.0 provide background information regarding the site setting, history, and RD. Section 4.0 presents a general overview of the activities that must be performed in order to implement the RA at the HPIA Site. A discussion of the RA Contractor's responsibilities are also included in this section. Section 4.0 is intended to supplement the Plans and Specifications prepared under the RD. Sections 5.0, 6.0, 7.0, 8.0, and 9.0 provide guidelines for the preparation of project plans by the RA contractor. An estimated project schedule is provided in Section 10.0.

Sections 4.0 through 10.0 may be subject to future revisions and supplementation based on additional data obtained throughout the RD process.

FIGURE 1-1

ROLES AND RELATIONSHIPS OF REMEDIAL ACTION PARTICIPANTS

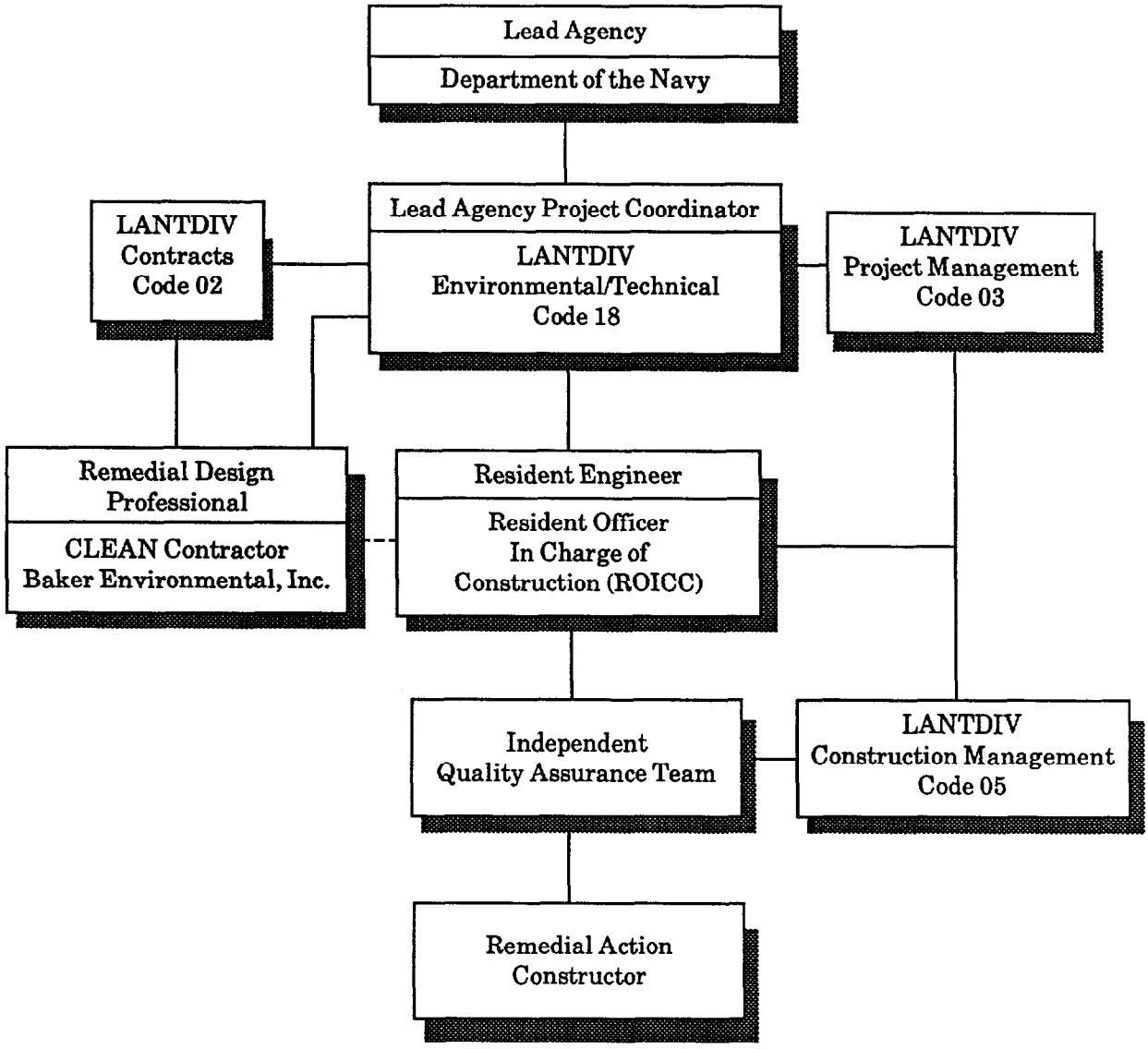

2.0 BACKGROUND AND SETTING

The following sections provide site background information including site location, site description, hydrogeology, previous investigation, and nature and extent of contamination.

2.1 Site Location

Camp Lejeune is a training base for the Marine Corps, located in Onslow County, North Carolina (Figure 2-1). The base covers approximately 170 square miles and is bounded to the southeast by the Atlantic Ocean, to the northeast by State Road 24, and to the west by U.S. Route 17. The town of Jacksonville, North Carolina is north of the base.

The area for this RA Work Plan is the shallow aquifer in the area of the Hadnot Point Industrial Area (HPIA). The HPIA is defined as Site 78 at MCB Camp Lejeune. Site 78, along with Site 21 (Transformer Storage Yard) and Site 24 (Industrial Area Fly Ash Dump), comprise Operable Unit No. 1 at MCB Camp Lejeune. The HPIA is bounded by Sneads Ferry Road to the north, Holcomb Boulevard to the west, Duncan Street to the east, and Main Service Road to the south (Figure 2-2). Site 21 is also located within this boundary. Site 24 is located along Louis Road across from Site 78. These two areas are not included in the scope of this Work Plan but will be considered at a later time.

2.2 Site Description

The HPIA, constructed in the early 1940's was the first facility at MCB Camp Lejeune. It was comprised of approximately 75 buildings and facilities including: maintenance shops, gas stations, administrative offices, commissaries, snack bars, warehouses, storage yards, and a dry cleaning facility. A steam plant and training facility occupy the southwest portion of the HPIA.

In addition to Sites 21 and 24, a fuel tank farm (Site 22) is located within Operable Unit No. 1 near the 1000 series buildings. The fuel farm is an underground storage tank site which is not being administered under CERCLA regulations. Therefore, Site 22 is not included as part of the Operable Unit. A fuel recovery/groundwater treatment system is currently being implemented at the tank farm.

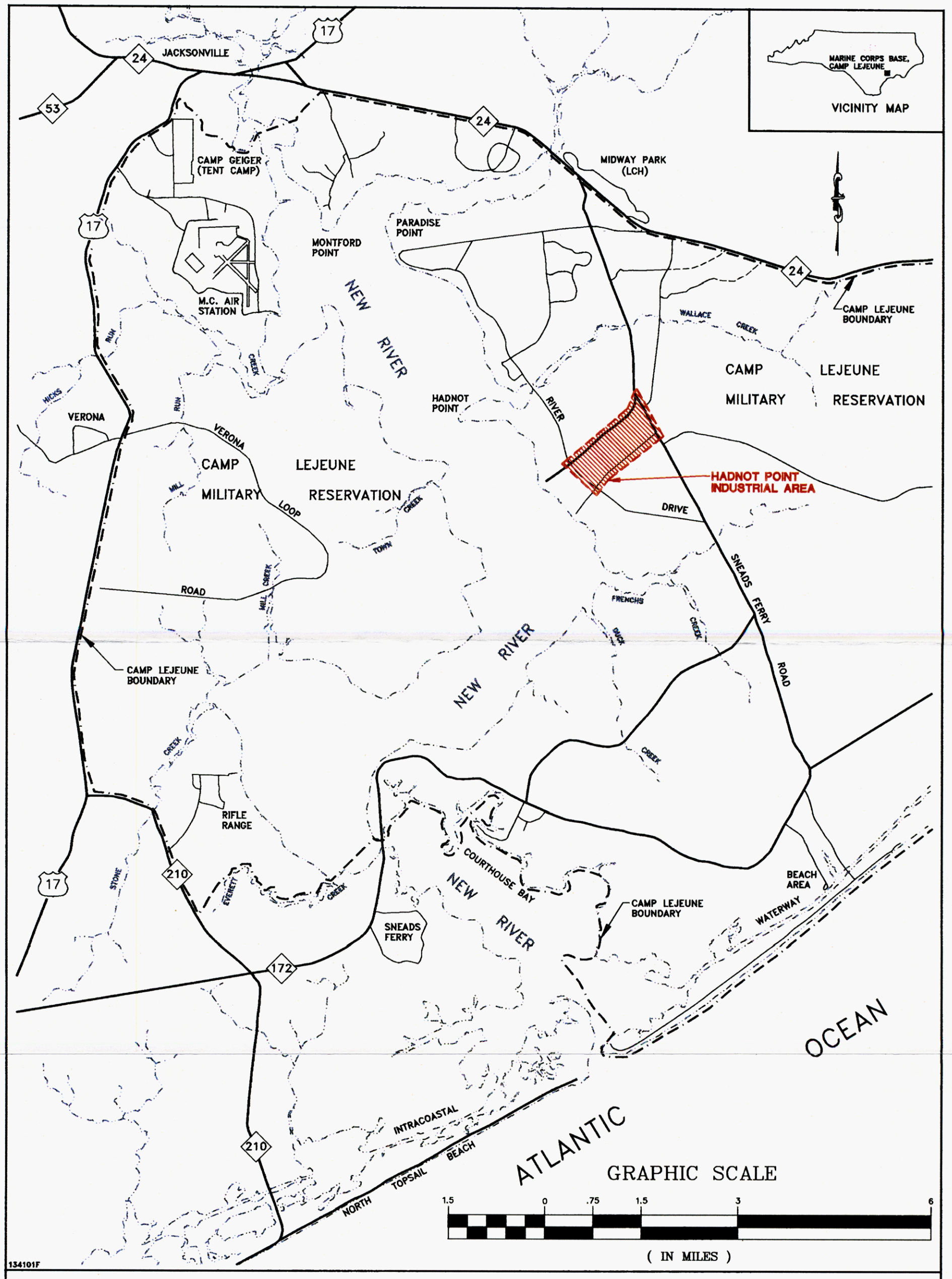

FIGURE 2-1
LOCATION MAP
HADNOT POINT INDUSTRIAL AREA

MARINE CORPS BASE, CAMP LEJEUNE
NORTH CAROLINA

SOURCE: U.S.G.S. WATER-RESOURCES INVESTIGATIONS REPORT 89-4096

0512EE BIY

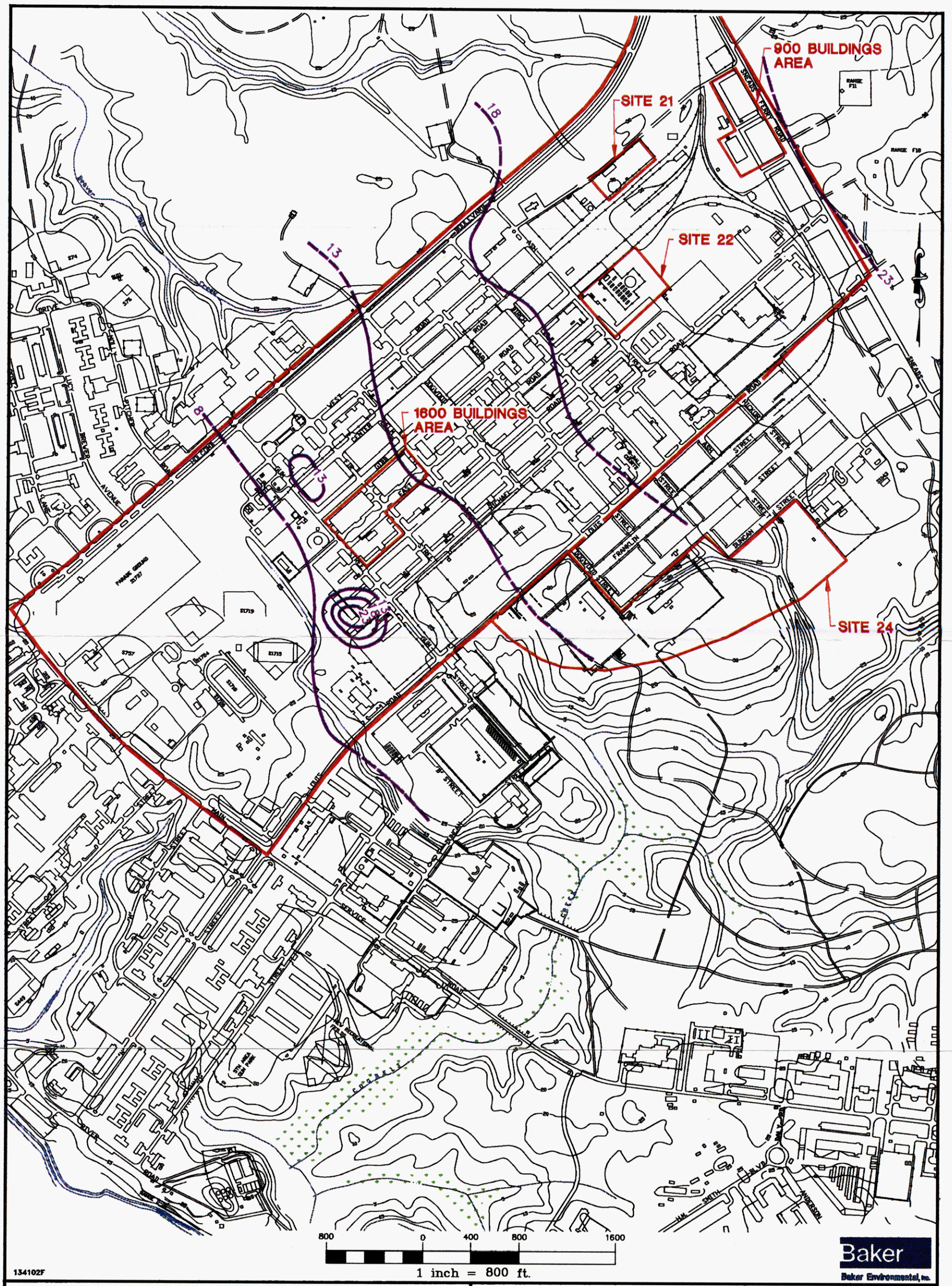

LEGEND

8 GROUNDWATER ELEVATION CONTOUR (DASHED WHERE INFERRED)

SOURCE: LANTDIV, FEBRUARY 1992

FIGURE 2-2
SITE AND SHALLOW GROUNDWATER CONTOUR MAP (2/20/91)
HADNOT POINT INDUSTRIAL AREA

MARINE CORPS BASE, CAMP LEJEUNE
NORTH CAROLINA

Several areas at the HPIA have been investigated for potential soil and groundwater contamination due to Marine operations and activities resulting in the generation of potentially hazardous wastes. The investigations indicate that contamination has resulted at the HPIA due to improper waste disposal, underground storage tank leakage, solvent spills, and sludge disposal.

2.3 Hydrogeology

The hydrogeologic system at Camp Lejeune consists of an unconfined (water table) aquifer and underlying semi-confined aquifers. The unconfined aquifer extends from the water table to the first significant confining layer, approximately 25 feet below land surface (bls).

The water table within the HPIA was at an elevation ranging between 8.48 and 25.56 mean sea level during January 1991. The depth to water table ranged from 6.67 to 23.18 feet bls. This variation in water table elevation is due to variations in water recharge throughout the area. This is caused by manmade features (parking lots, buildings, drainage ditches).

Groundwater flow in the shallow aquifer is predominantly to the southwest in the southern portion of HPIA and to the west-southwest in the northern and central portions of the site (see Figure 2-2). There is some groundwater mounding in the southern corner of the site. Generally, the shallow groundwater flows toward the New River. Water in the lower water bearing zones trends generally in the same direction (southwest) as that in the surficial.

The horizontal hydraulic gradient in the shallow aquifer is approximately 0.003 feet per foot (ft/ft). The estimated gradient for the intermediate and deep zones are approximately 0.0015 ft/ft and 0.0021 ft/ft, respectively.

2.4 Investigation and Study History

Several of the areas within the HPIA have been investigated for potential contamination due to Marine Corps operations and activities resulting in the generation of potentially hazardous wastes. The investigations indicate that contamination has resulted at the HPIA due to former improper waste disposal, underground storage tank leakage, solvent spills, and sludge disposal.

Since 1983, various investigation and sampling activities have been conducted at the HPIA. On October 4, 1989, Camp Lejeune was placed on the National Priorities List (NPL). The DoN, the United States Environmental Protection Agency (USEPA), and the North Carolina Department of Environment, Health and Natural Resources (N.C. DEHNR) entered into a Federal Facilities Agreement on February 13, 1991. The studies that have been conducted at the HPIA Site (with respect to the shallow aquifer only) are briefly summarized below.

In 1983, an Initial Assessment Study (IAS) was conducted at Camp Lejeune by Water and Air Research. The study identified a number of areas within Camp Lejeune, including the HPIA, as potential sources of contamination.

Between 1984 and 1988, Environmental Science and Engineering, Inc. (ESE) conducted a Confirmation Study, which is analogous to an RI/FS. The Confirmation Study, was conducted in two investigative steps: the Verification Step and the Characterization Step. The Verification Step identified the presence of volatile organic compounds (VOCs) within the shallow aquifer in the vicinity of the HPIA fuel tank farm (Site 22) and in Water Supply Well 602. The maximum contaminant concentrations observed in the groundwater included 17,000 µg/L benzene and 27,000 µg/L toluene collected from the tank farm area. Benzene was also detected in Supply Well 602 at a concentration of 38 µg/L, which exceeds the Federal maximum contaminant level (MCL) of 5 µg/L.

Due to the results of the Verification Step, Supply Well 602 was closed and other supply wells in the area were sampled. Four additional supply wells (601, 608, 634, and 637) were found to have elevated levels of VOCs, including trichloroethylene (TCE).

The next part of the Confirmation Study, the Characterization Step, was conducted to determine the extent of the VOC contamination at the HPIA Site. During this investigation, multiple tasks were completed, including: a soil gas survey, installation of 33 monitoring wells, sampling of all HPIA monitoring wells and nearby water supply wells, and aquifer testing (to evaluate the hydraulic parameters of the deep aquifer). The results of the Characterization Step revealed that several areas within the HPIA showed elevated levels of VOCs in the soil gas samples. Results of the shallow monitoring well analyses revealed the presence of elevated levels of various petroleum-related compounds such as benzene, xylene, ethylbenzene, TCE, trans-1,2-dichloroethene (trans-1,2-DCE), vinyl chloride, oil and grease, and lead.

Baker Environmental, Inc. (Baker) prepared an IRA RI, FS, PRAP, and ROD for the HPIA Site. These reports focused specifically on the shallow groundwater aquifer beneath the HPIA and were based solely on data generated during the previous field investigations. The purpose of the IRA RI was to consolidate currently available information on the shallow aquifer and to develop the basis and supporting documentation for preparation of the IRA FS. The IRA FS considered various interim remedial actions for the shallow aquifer at the HPIA Site. The IRA PRAP indicated that the preferred IRA alternative for the site was a groundwater pump and treat system consisting of oil/water separation, metals removal, air stripping, and possibly carbon adsorption. This alternative was presented and signed into the Final ROD (September 1992) for the site.

Baker recently completed a Final Treatability Study which evaluated the effectiveness of the IRA alternative for the site.

2.5 Nature and Extent of Contamination

Previous studies indicate that the shallow groundwater is contaminated primarily with fuel related compounds: benzene, 1,2-dichloroethene (1,2-DCE), TCE, vinyl chloride, solvents, and metals such as antimony, arsenic, beryllium, chromium, iron, lead, manganese, mercury, and nickel. Several compounds were detected at concentrations exceeding the Federal and North Carolina drinking water standards for groundwater.

Prior to the sampling conducted during the Treatability study Pilot Test, the most recent shallow groundwater data was collected in January 1991 by ESE. This data is similar to the results of the earlier studies with the exception that the compound concentrations from the January 1991 data were generally lower than the concentrations identified in the earlier studies. There is no apparent reason why shallow groundwater concentrations were lower in 1991. However, deep groundwater quality showed an improving trend after the potable supply wells near the HPIA were shut down in the mid-1980s. Groundwater quality in the deep portion of the aquifer may have improved since contaminants from the shallow groundwater were no longer being drawn vertically by the pumping action of the supply wells.

Based upon the results of the 1991 sampling, the following compounds were identified as potential contaminants of concern for the shallow aquifer at the HPIA: benzene, 1,2-DCE, TCE, antimony, arsenic, beryllium, chromium, iron, lead, manganese, mercury, and nickel. Table 2-1 presents a summary of the 1991 shallow aquifer groundwater data with respect to

TABLE 2-1
SUMMARY OF CONTAMINANTS OF CONCERN DETECTED IN THE SHALLOW GROUNDWATER AQUIFER, JANUARY 1991

Potential Contaminants of Concern	HPGW1	HPGW2	HPGW3	HPGW4-1	HPGW5	HPGW6	HPGW7	HPGW8	HPGW9-1	HPGW10	HPGW11	HPGW12	HPGW13	HPGW14	HPGW15
VOC (µg/L)															
Benzene	5 <	5 <	5 <	5 <	5 <	5 <	5 <	5 <	5 <	5 <	5 <	5 <	5 <	5 <	5 <
1,2-Dichloroethene	73	10 <	10 <	5 <	5 <	5 <	5 <	5 <	1200	5 <	5 <	5 <	5 <	5 <	7
Trichloroethene	91	5 <	5 <	0.9 J	5 <	5 <	5 <	2 J	14000	5 <	5 <	5 <	5 <	5 <	4 J
Inorganics (µg/L)															
Chromium	87	64.3	16.7	187	3.6 B	1590	313	91.8	66.4	310	140	25.5	48.9	127	21.4
Iron	64100	34800	10400	100000	3100	265000	65700	40900	19800	119000	31800	5600	33500	87200	4800
Lead	16.6	29.4	11.4	66.6	13.6	60.7	112	54.1	128	186	45.2	15.7	9	66.5	16.6
Manganese	168	77	53.9	425	162	487	136	46.5	45	255	103	18.3	30.3	80	18.3
Antimony	13.3 <	15.6 B	46.5 B	21.9 B	13.3 <	13.3 <	22 <	22	17.6 B	22 <	22 <	22 <	13.3 <	13.3 <	22 <
Arsenic	8 B	24.1	15.6	15.5	1.5 <	31.5	18.3	28.4	3 B	39.9	9.1 B	1.8 <	47	45.6	1.8 <
Beryllium	6	1.7 BG	1.2 B	6.7	0.86 B	20	4.8 B	2.1	0.79 B	5.6	2.1 <	2.1 <	0.59 B	2.7 B	2.1 <
Mercury	0.1 <	0.1 <	0.1 <	0.1 <	0.1 <	1.4	0.25	0.13	0.1 <	0.82	0.1 B	0.1 <	0.1 <	0.26	0.1 <
Nickel	31.3 B	16.9 B	12.1 B	57	5.2 <	161	50.7	25.2	15.1 B	92.2	23.6 B	11 <	21.2 B	41.6	11 <

Potential Contaminants of Concern	HPGW16	HPGW17-1	HPGW18	HPGW19	HPGW20	HPGW21	HPGW22	HPGW23	HPGW24-1	HPGW25	HPGW26	HPGW29	22GW1	22GW2	North Carolina Water Quality Criteria	Federal Drinking Water MCLs
VOC (µg/L)																
Benzene	5 <	5 <	N/A	5 <	5 <	5 <	5 <	24	3 J	5 <	5 <	5 <	7900	5 <	1	5
1,2-Dichloroethene	5 <	5 <	N/A	0.8 J	5 <	5 <	5 <	8900	42000 D	5 <	5 <	5 <	5 <	5 <	70	70
Trichloroethene	5 <	5 <	N/A	2 J	5 <	3 J	5 <	3700	180	5 <	5 <	5 <	5 J	5 <	2.8	5
Inorganics (µg/L)																
Chromium	209	37	N/A	13.8	424	45	79.8	76.3	26.3	205	13	179	457	26.3	50	100
Iron	47200	10500	N/A	36200	2E+05	56600	24400	23300	19200	46600	19000	76200	1E+05	16200	300	--
Lead	100	23.7	N/A	31.7	20	49.4	39.4	45	21.4	71.6	9	29.1	307	16.2	50	15
Manganese	98.3	31.3	N/A	79	217	136	94.1	68.8	54.8	118	10.6 B	236	284	763	50	--
Antimony	22 <	22 <	N/A	13.3	21.9B	13.3 <	24.6 B	24.6 <	22 <	13.3 <	13.3 <	13.3 <	20.9 B	13.3	--	6
Arsenic	17.3	1.8 <	N/A	5 B	49.4	12.1	7.2 B	6.6 B	4.2 B	13.2	1.5 <	25.6	50.3	11	50	50
Beryllium	5.3	2.1 <	N/A	2.3 B	9.5	3.7 B	0.6 B	1 B	2.1 <	2.8 B	0.5 <	8.7	5.8	0.5	0.5	4
Mercury	0.13 B	0.1 <	N/A	N/A	0.5	0.1 <	0.1 <	0.1 <	0.1 <	0.1 <	0.1 <	0.1 <	0.35	0.1	1.1	2
Nickel	41	11.9 B	N/A	7.3 B	168	30.8 B	23.2 B	33.2 B	14 <	39.2 B	5.2 <	93.5	186	17	150	100

Notes:
< = Compound was analyzed, but not detected at the listed detection limit
J = Value is estimated
B = Reported value is < contract required detection limit (CRDL), but > instrument detection limit (IDL)
D = Compound identified in an analysis at a secondary dilution factor
N/A = Not Analyzed
-- = Not established
MCL = Maximum Contaminant Level

the contaminants of concern. Oil & grease data is not included on Table 2-1 due to the fact that this analysis was not conducted on any of the 1991 samples. The maximum concentration of benzene (7900 µg/L) was detected in a monitoring well immediately adjacent to the fuel tank farm (Site 22). Maximum concentrations of 1,2-DCE (42,000 µg/L) and TCE (14,000 µg/L) were detected in the northern corner of the site (near the 900 series buildings) and in the southwestern portion of the site (near the 1600 series buildings), respectively. Metals concentrations were elevated throughout most of the site, especially near the fuel farm (lead).

Based on review of existing data, two major areas of contaminated groundwater (source areas) have been identified in the shallow aquifer at HPIA as shown on Figure 2-3. The first area or plume is located northeast of Cedar Street near the 900 series buildings. The other plume is located southwest of Cedar Street near the 1600 series buildings.

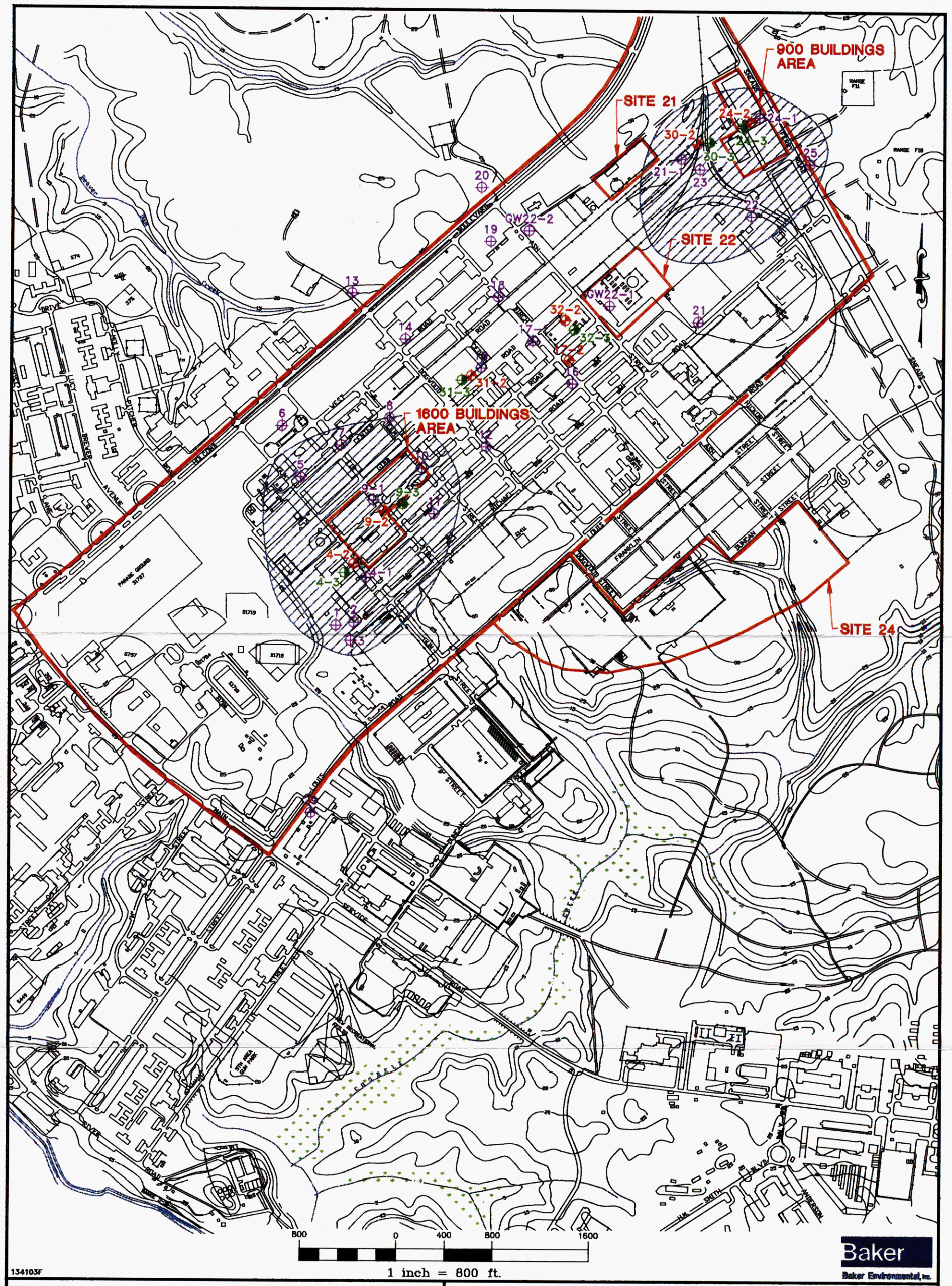

LEGEND

APPROXIMATE SOURCE AREA OF GROUNDWATER CONTAMINATION IN THE SHALLOW AQUIFER

20 EXISTING SHALLOW MONITORING WELL

24-2 EXISTING INTERMEDIATE MONITORING WELL

24-3 EXISTING DEEP MONITORING WELL

SOURCE: LANTDIV, FEBRUARY 1992

FIGURE 2-3
APPROXIMATE AREA OF GROUNDWATER CONTAMINATION IN THE SHALLOW AQUIFER
HADNOT POINT INDUSTRIAL AREA
MARINE CORPS BASE, CAMP LEJEUNE
NORTH CAROLINA

01493EE06Y

3.0 REMEDIAL ACTION DESIGN

This section of the RA Work Plan briefly describes the groundwater collection and treatment system to be installed at the HPIA for the interim remediation of the shallow aquifer. The remediation (or clean-up) goals for the site and the operating parameters for the treatment system are also discussed.

3.1 Description of the Groundwater Recovery and Treatment System

In general, the IRA alternative for the HPIA Site includes groundwater recovery and treatment, followed by discharge to the Hadnot Point Sewage Treatment Plant (STP). Two on-site treatment systems will be installed at the site, each capable of treating up to 80 gallons per minute (gpm) of groundwater from a maximum of 16 recovery wells. The system is expected to be needed at the site for numerous years. Two separate systems will be needed based on the distance between the two groundwater plumes. The components of the recovery/treatment system are described below and a schematic is shown on Figure 3-1. Additional information on the recovery/ treatment system are provided in the Basis of Design Report.

3.1.1 Groundwater Recovery System and Pumping System

Initially, the groundwater recovery system will be designed to extract groundwater from a set of recovery wells installed within each of the two contaminant plumes at a spacing of 400 feet. The well field configurations will provide for recovery of contaminated groundwater from each of the two plumes as the plumes migrate to the southwest, and will prevent the plumes from migrating further in the direction of the hydraulic gradient. Initially, four recovery wells will be installed in the north plume and five wells installed in the south plume.

Each of the recovery wells will be a minimum of 6-inches in diameter and will be installed to a depth of approximately 35 feet below ground surface. The groundwater recovery flow rate from each well is assumed to be 5 gallons per minute. Note that a step drawdown test will be performed following the installation of the recovery wells to determine its actual well yield. This information will be used to determine if additional recovery wells are required to contain the plumes.

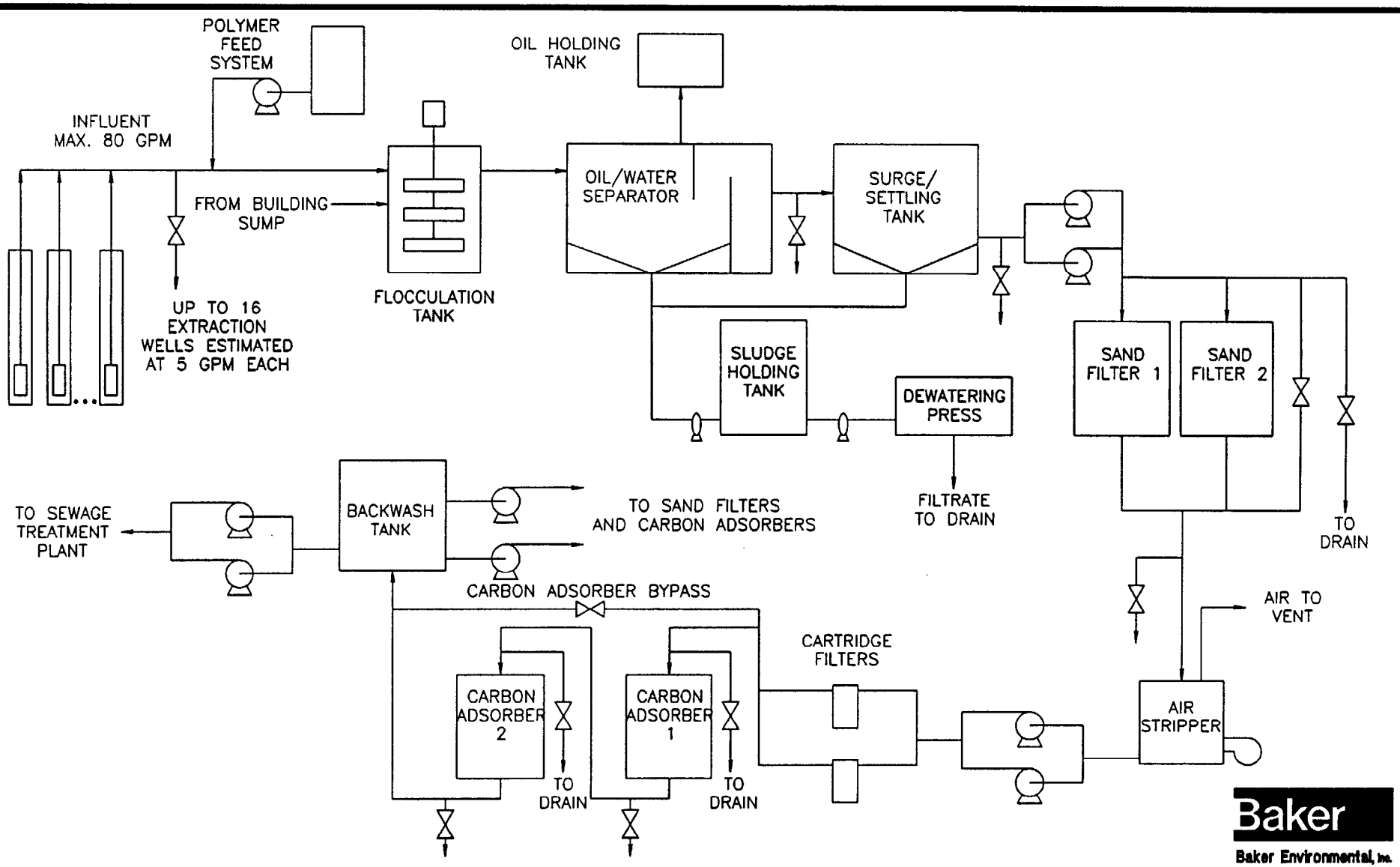

Baker

Baker Environmental, Inc.

NOTE: ALL EQUIPMENT DRAIN LINES CONNECT TO BUILDING SUMP THAT DISCHARGES TO FLOCCULATION TANK.

FIGURE 3-1
HADNOT POINT INDUSTRIAL AREA
SHALLOW AQUIFER GROUNDWATER
TREATMENT SYSTEM
REMEDIAL ACTION WORK PLAN
MARINE CORPS BASE, CAMP LEJEUNE
NORTH CAROLINA

134108F

An air operated pump and controller unit will be installed in each recovery well. The extracted groundwater will be pumped through 2-inch HDPE header, set in shallow trenches, to one of the treatment systems.

3.1.2 Groundwater Treatment System

A treatment unit will be located within the area of each of the plumes. Each treatment system will be designed for a maximum flow capacity of 80 gpm, assuming a maximum of 16 recovery wells at 5 gpm per well. The first treatment step will consist of a chemical feed system and a flocculation tank. This pretreatment step will form a floc to aid in solids and suspected metals removal. The pretreated groundwater will then flow to a gravity oil/water separation process for the removal of any floating oils, settleable solids, and/or oily wastes that are heavier than water. The oil/water separation system will include an oil/water separator and a holding tank for retention of the extracted free oil product. Collected free product will either be sold to a waste recycler or incinerated at a RCRA-permitted facility. Settled solids will be transferred to a sludge holding tank.

The aqueous effluent from the oil/water separation system will flow to a surge/settling tank with a capacity of approximately 2,500 gallons. This tank should provide sufficient detention time for suspended metals removal.

The aqueous effluent from the settling tank will be pumped through multi-media sand filters prior to flowing to the low profile air stripper for removal of VOCs. The effluent from the air stripper will be pumped through cartridge filters designed to remove suspended solids. The aqueous effluent will then flow to two liquid-phase carbon adsorbers operating in parallel. Bypass piping will be provided around the carbon adsorbers.

Solids generated during the treatment process will be pumped to a sludge holding tank. The sludge will then be dewatered with a press and properly disposed. The filtrate water will be pumped back to the head of the groundwater treatment system.

3.1.3 Discharge to the Hadnot Point STP

The treated groundwater will be pumped to the sanitary sewer for discharge to the existing biological treatment system at the Hadnot Point STP. The STP discharges to the New River.

3.2 Remediation Goals and Operating Parameters

The groundwater extraction and treatment system will operate at the HPIA Site until the groundwater contaminants of concern in the two plume areas are reduced to the remediation goals (or cleanup goals) established in the Feasibility Study (Baker, 1992). The contaminants of concern include TCE, 1,2-DCE, benzene, vinyl chloride, antimony, arsenic, beryllium, chromium, iron, lead, manganese, mercury, and nickel. The remediation goals include Federal and State groundwater Maximum Contaminant Levels (MCLs). These goals have been defined by the USEPA Region IV and the N.C. DEHNR Division of Environmental Management. Table 3-1 presents a listing of the Federal MCLs established for drinking water and the State water quality criteria for groundwater and surface water for the contaminants of concern. Please note that the remediation goal for iron will be background levels instead of Federal or State MCLs since the Camp Lejeune area is naturally high in iron.

The treatment system will be designed so that the effluent from the system will meet the Federal and/or North Carolina groundwater standards listed on Table 3-1. A summary of the expected influent concentrations for the contaminants of concern and the estimated effluent concentrations (based on the results of the treatability study) are presented on Table 3-2.

TABLE 3-1

FEDERAL AND STATE CRITERIA FOR THE CONTAMINANTS OF CONCERN IDENTIFIED FOR THE SHALLOW AQUIFER

Contaminant of Concern	North Carolina* Water Quality Criteria for Groundwater (µg/L)	Federal Primary Drinking Water MCLs (µg/L)	North Carolina* Water Criteria for Fresh Surface Water (µg/L) Class C Waters	North Carolina* Water Quality Criteria for Tidal Salt Waters (µg/L) Class SC Waters
TCE	2.8	5	92.4 (4)	92.4 (4)
1,2-DCE	--	70	--	--
Vinyl Chloride	0.015	2.0	--	--
Benzene	1	5	71.4 (4)	71.4 (4)
Antimony	--	6	--	--
Arsenic	50	50	50 (1)	50 (1)
Beryllium	--	4	.117 (4) 6.5 (1)	.117 (4)
Chromium	50	100	50 (1)	20 (1)
Iron (5)	300	300 (6)	1000 (7)	--
Lead	50	15 (3)	25 (1)	25 (1)
Manganese	50	50 (6)	--	--
Mercury	1.1	2	0.012 (1)	.025 (1)
Nickel	150	100	88 (1)	--

* From NC Administrative Code 15A NCAC 2B.0200
(1) Protection of aquatic life.
(2) -- = No standard established.
(3) MCL is action level for public water supply systems.
(4) Protection of human health through consumption of fish/shell fish.
(5) The background levels of iron within the Camp Lejeune area are between 160,000 and 684,000 µg/L.
(6) Secondary MCL.
(7) NC Action Level for discharge to fresh waters.

TABLE 3-2

ESTIMATED TREATMENT SYSTEM INFLUENT AND EFFLUENT CONCENTRATIONS FOR THE CONTAMINANTS OF CONCERN IN THE SHALLOW AQUIFER AT HPIA

Contaminants of Concern	Estimated Influent Concentration Based on 95th Percentile Value (1) (µg/L)	Estimated Effluent Concentration Based on 95th Percentile Values (2) (µg/L)
TCE	1,677	<1
1,2-DCE	4,931	<1
Vinyl Chloride	360 (3)	<1
Benzene	856	<1
Antimony	22	<10
Arsenic	24	10
Beryllium	5	<1
Chromium	387	10
Iron	78,451	10,000
Lead	81	<15
Manganese	217	<50
Mercury	0.37	<0.2
Nickel	64	<20

(1) Calculated from 28 samples collected in January 1991.
(2) VOC estimates based on results of air stripper modeling information. Metal effluent levels based on percent removal calculated from pilot-scale test.
(3) Maximum concentration from February 1993 sample. 95th percentile value was not calculated.

4.0 REMEDIAL ACTION IMPLEMENTATION

Prior to implementing the IRA alternative at the HPIA Site, several project plans need to be prepared and activities performed. This section of the RA Work Plan discusses these plans and activities in addition to outlining the RA Contractor's responsibilities with respect to these items.

It should be noted that USEPA sometimes refers to the RA "Contractor" as the "Constructor." In this text, these two terms, "Contractor" and "Constructor" can be used interchangeably.

4.1 Description of Remedial Action Contractor's Responsibilities

General responsibilities of the RA Contractor selected to install and start-up the groundwater collection/treatment systems at the HPIA Site are outlined below:

- Prepare project plans for the installation and operation of the extraction/treatment systems.

- Procure all required equipment for the installation and the operation of the treatment systems.

- Procure any construction permits required for the installation (e.g., Base Construction Permits for Welding). Since the remedial action is an on-site alternative being conducted under CERCLA requirements, no Federal permits should be required, but the technical requirement associated with all permits that would normally be required must be met. A "Non Discharge Permit" from the State will be required for this action.

- Install all of the groundwater extraction wells and conveyance system.

- Construct the two treatment systems.

- Conduct start-up activities for the systems.

- Perform the required sampling activities and submit samples to the contracted laboratory for analysis.

- Establish reporting procedures with the USEPA and the N.C. DEHNR (Superfund Section).

Details of several of the above-mentioned items are presented in the remainder of Section 4.0.

4.2 Preparation of Project Plans

As stated in the previous section, the RA Contractor is responsible for preparing all identified project plans to be used during the construction, installation, and operation of the IRA for the shallow aquifer at the HPIA Site. The required project plans will include the following:

- Operation and Maintenance Plan
- Health and Safety Plan
- Sampling and Analysis Plan
- Quality Assurance/Quality Control Plan
- Environmental Monitoring Plan

Guidelines for the preparation of these plans are provided in Section 5.0 through 9.0 of this RA Work Plan.

4.3 Equipment Procurement

The RA Contractor is responsible for providing of all equipment needed to implement the remedial design. The major components of the recovery treatment systems include, but may not be limited to, the items listed below:

- Recovery wells - minimum of 6 inches in diameter; stainless steel; 35-feet deep minimum of nine wells for the first year; up to a maximum of 32 over a several year period.

- Pneumatic pumps for each recovery well.

- Piping system components (PVC Casing Pipe, HDPE Carrier Pipe).

- Polymer feed systems.

- Flocculation tanks with adjustable speed mixers/agitators.
- Gravity oil/water separators (slant rib coalescing type).
- Holding tanks for the recovered oil product and settled material.
- Air stripping equipment including blower, pumps, and controls.
- Multi-media sand filters.
- Pumps for transferring the groundwater in between treatment components.
- Liquid-phase carbon adsorber units.
- Dewatering press.
- Valves, sampling ports, and other miscellaneous plumbing hardware.
- Control and monitoring system.

This equipment will be located in a building located at each site.

4.4 Permit Procurement

This section of the RA Work Plan addresses the permitting requirements associated with the implementation of the collection and treatment systems to be installed at the HPIA Site. It is important early in the design process to identify substantive permits and approvals that may be required so to avoid delays in implementing the various construction activities. It is the DoN's and/or the RA Contractor's responsibility to procure any actual permits required. As stated earlier, the only permits that may be required at this time are Base Construction Permits for activities such as welding, electric wiring, etc., and a "Non Discharge Permit" from N.C. DEHNR. Since the remedial action is to be conducted on site, no other permits under CERCLA should be required. Note that the technical requirements associated with all permits that would otherwise be required must be met.

4.5 Preconstruction Meeting

Following the procurement of all appropriate permits and prior to any construction activities, the RA Contractor, the DoN, the USEPA, the N.C. DEHNR (Superfund Section), the Remedial Design Professional, and the Resident Engineer will have a preconstruction meeting. The main purpose of this meeting will be to review the DoN's construction policies and any other construction-related items.

4.6 System Construction

The RA Contractor will be responsible for the complete construction and installation of the groundwater extraction/treatment systems. This includes extraction wells and pumps, treatment components and pumps, and all associated conveyance piping, valves, mechanical components, electrical components, and building components. All work will be subject to local construction codes.

4.7 Construction Completion and Acceptance

As construction nears completion, specific actions will need to be taken to properly close-out all construction activities. A sequence of inspections, reviews, and report submittals as discussed below will be required. It will be the Department of the Navy's responsibilities to ensure that these activities are completed.

4.7.1 Pre-Final Construction Conference and Inspection

A pre-final construction conference and inspection will be conducted by the DoN, the USEPA, and the N.C. Superfund Section with the RA Contractor to discuss procedures, requirements, and the schedule for the completion of the construction activities. During this meeting, the treatment systems will be reviewed to determine whether the project is complete and consistent with contract documents. Any outstanding construction activities or deficiencies discovered during the inspection will be identified and noted. Other items that will be discussed during this conference will include:

- Clean up and restoration responsibilities.
- Demobilization activities.
- Security requirements for the proper transfer of system operation.

- Schedule for completion of outstanding construction items and deficiencies.
- Date for final inspection.
- Schedule for system start-up.
- Operator training.
- Implementation of Operation and Maintenance Plan and Sampling and Analysis Plan.
- Performance certification of equipment.
- Submittal of as-built drawings.

4.7.2 Pre-Final Inspection Report

A Pre-Final Inspection Report will be prepared by the DoN and distributed to the RA Contractor. This report will discuss all major items identified during the pre-final inspection and conference and the agreed upon resolutions. The report will also identify a specific schedule for the final inspection and system start-up.

4.7.3 Final Inspection

A final inspection of the groundwater collection/treatment systems will be conducted with the DoN, the RA Contractor, the USEPA, and the N.C. Superfund Section. The final inspection will consist of a walk-through inspection of the site. The Pre-Final Inspection Report will be used as a checklist to assure that previously identified deficiencies and outstanding construction items have been properly addressed and corrected by the RA Contractor. Should items be found which have note been resolved, the RA Contractor will be directed to take the necessary steps to correct the items, and another final inspection will be scheduled. A Final Inspection Report and certification will be prepared by the DoN. This document will certify that the construction of the treatment systems is complete and consistent with all contract documents.

4.8 System Start-Up

Following construction, the RA Contractor will conduct a system start-up over a 90-day period. This start-up time will be used to ensure that the systems are functioning as intended by the remedial design. It will provide an opportunity for the system operator to assume total control of the operation and maintenance of the systems. The RA Contractor will be responsible for making adjustments as needed to achieve the operational objectives of the systems.

4.8.1 System Performance Testing

Treatment system performance for a 30-day period during start-up will be the basis for demonstrating that the system is meeting the intended treatment goals. The system performance will be based on the results of the 30-day operational test data. Section 7.0 presents specific details of the sampling and analysis which will be required to verify system performance.

4.9 Normal System Operation

After the initial 90 day start-up period, where the system is operated by the RA Contractor, the treatment systems will be turned over to the DoN. At this time the DoN will contract with an approved contractor, through a Facilities Services Contract (FSC) to operate, monitor, and maintain the treatment systems.

4.9.1 Carbon Unit Operation

The two liquid phase carbon adsorption units are designed with bypass piping so that the units do not have to be run continuously. In normal operations, the carbon system will be bypassed and effluent from the air stripper will be pumped through the cartridge filters to the backwash tank. The carbon units will only be used if routine testing shows that effluent concentrations for the contaminants of concern exceed North Carolina groundwater standards, or Federal drinking water MCLs, or are above detection limits, if no standard exists.

4.10 Remedial Action Modifications

After approximately one year of operation, an evaluation will be made to determine the effectiveness of the groundwater treatment system in containing and treating the two shallow aquifer contaminant plumes. This evaluation will be based on the results of the following tasks:

- Performance of the treatment systems based on the results of sampling activities conducted during the previous 12 months.

- Characteristics of the shallow aquifer in the HPIA based on sampling data from the existing groundwater monitoring wells.

- Yields and recovery zones of the initial set of groundwater recovery wells, based on constant rate pump tests.

Using this information, a recommendation will be made as to whether modifications are warranted for the system. These modifications could be accomplished by adding additional recovery wells to the groundwater recovery system, or by looking at different modes of system operation.

4.11 Remedial Action Completion and Closeout

Based on the results of the long-term monitoring to be conducted at the HPIA Site, project closeout activities will be conducted when the groundwater treatment system has met the remediation goals.

Upon completion of the remediation, the following information will be provided to the USEPA and N.C. DEHNR:

- How the treatment system has met the remediation goals.

- A summary of location-specific conditions including monitoring results and a detailed description of any remaining contamination or releases.

- A description of any operation and maintenance requirements and assurances of applicable institutional controls that will be necessary.

- Any recommendations for further action or monitoring at the site.

- As appropriate, a Notice of Intent to Delete when the site is intended to be deleted from the National Priority List (NPL) and a projected date for submission of the NPL Closeout Report.

5.0 OPERATION AND MAINTENANCE PLAN

The objective of the detailed Operation and Maintenance (O&M) Plan is to identify and describe the anticipated O&M activities associated with the groundwater collection and treatment systems to be installed at the HPIA.

The detailed O&M Plan for the HPIA cannot be prepared until the remedial design has been finalized, the RA Contractor has been selected, and specific equipment has been procured. Therefore, this section of the RA Work Plan contains an outline of the plan along with a description of the important elements to be included in the detailed plan. Preparation of the detailed O&M Plan for the site will be the responsibility of the RA Contractor. The information presented in this RA Work Plan will serve to guide the RA Contractor's preparation of the detailed O&M Plan. In addition, Section 01730 of the project specifications provides additional information on O&M Plan requirements.

5.1 Required Contents of the Operation and Maintenance Plan

An example outline for the detailed O&M Plan is presented on Table 5-1. The O&M Plan should first contain a detailed description of the collection/treatment systems that will be installed at the site. An analysis of each system, identifying potential problem areas and operational procedures to be employed during emergencies, is required. Emergency procedures and contacts must also be specified.

The O&M Plan must provide for establishing operator training plans as well as health and safety requirements of personnel performing O&M activities. Recommended monitoring methods including parameters and sampling frequency must be listed. A discussion of anticipated monitoring results and the procedures to be employed for analyzing monitoring data must be provided. QA/QC requirements for system monitoring must also be included.

Recommended and required recordkeeping systems for providing consistent and dependable facility operation must be addressed in the plan. O&M schedules to ensure proper equipment operation are required. Also, a list of system parts including the vendor, vendor address and phone number, and repair service availability must be outlined in the plan.

TABLE 5-1
EXAMPLE OUTLINE FOR A DETAILED O&M PLAN

1.0 COLLECTION/TREATMENT SYSTEMS DESCRIPTION

2.0 NORMAL OPERATION AND MAINTENANCE ACTIVITIES
- 2.1 Operation Activities
- 2.2 Maintenance and Repair Activities
- 2.3 Prescribed Treatment and Operating Conditions
- 2.4 Operation and Maintenance Schedule
- 2.5 Preventive Maintenance Plan

3.0 POTENTIAL OPERATING PROBLEMS AND TROUBLESHOOTING GUIDE
- 3.1 Identification and Analysis of Potential Problems
- 3.2 Sources of Information
- 3.3 Troubleshooting Procedures

4.0 ROUTINE MONITORING AND LABORATORY TESTING
- 4.1 Monitoring Tasks
- 4.2 Laboratory Tasks
- 4.3 QA/QC
- 4.4 Monitoring Schedule

5.0 ALTERNATE OPERATION AND MAINTENANCE
- 5.1 Alternate Procedures
- 5.2 Additional Resource Requirements

6.0 SAFETY PLAN
- 6.1 Precautions for Site Personnel
- 6.2 Systems Failure

7.0 EQUIPMENT
- 7.1 Identification of Equipment
- 7.2 Installation of Monitoring Equipment
- 7.3 Equipment Maintenance
- 7.4 Replacement Schedule

8.0 RECORDS AND REPORTING MECHANISMS
- 8.1 Daily Operating Logs
- 8.2 Laboratory Records
- 8.3 Records for Operating Costs
- 8.4 Procedures for Reporting Emergencies
- 8.5 Personnel and Maintenance Records
- 8.6 Agency Deliverables

9.0 OPERATION AND MAINTENANCE BUDGET
- 9.1 Labor Budget
- 9.2 Preventive and Corrective Maintenance Budget
- 9.3 Equipment and Supply Budget
- 9.4 Laboratory or Other Contractual Obligations Budget
- 9.5 Operation Costs

10.0 OPERATOR TRAINING PROGRAM

The O&M Plan must summarize required labor and the associated costs. A summary of labor, equipment, and operating costs anticipated for O&M of the systems during their life must be presented in the plan.

The O&M Plan must consider site use and disposition of equipment after the completion of the remedial action activities.

5.2 Implementation and Schedule of the Operation and Maintenance Plan

The O&M Plan will describe methods for its implementation. In general, O&M procedures will be reviewed during the system start-up period. System maintenance, emergency operations, emergency response programs, system control, and safety will be reviewed and implemented during a 90-day period beginning near the end of construction activity.

The O&M Plan will be submitted at the end of construction so that the plan can address the actual final systems designed.

6.0 HEALTH AND SAFETY PLAN

The RA Contractor will prepare a Health and Safety Plan (HASP) to address all health and safety issues pertaining to the construction and operation of the groundwater collection/treatment systems. The HASP will address known hazards and risks associated with the remedial activities to help provide safe conditions for the RA Contractor personnel and nearby residents (i.e., MCB Camp Lejeune personnel). The HASP will comply with USEPA, OSHA, and State health and safety requirements. A typical outline for a HASP is presented on Table 6-1. At a minimum, the HASP will include the following items:

- Listing of the Health and Safety Officer and other key personnel responsible for site safety and public protection.
- Medical surveillance requirements.
- Listing of personal protective equipment to be used during groundwater collection and treatment implementation.
- Description of the monitoring and sampling techniques to be used.
- Site control measures.
- Decontamination procedures (both personnel and equipment).
- Emergency procedures and medical procedures for injuries and toxicological incidents.
- Outline of contingency plans for weather, exposure to unexpected hazards, and emergency events.

TABLE 6-1

EXAMPLE OUTLINE FOR A HEALTH AND SAFETY PLAN

1.0 INTRODUCTION

2.0 PROJECT PERSONNEL AND RESPONSIBILITIES

3.0 SITE CHARACTERIZATION
- 3.1 Site Background
- 3.2 Site Work Plans
- 3.3 Site Description
- 3.4 Hazard Evaluation

4.0 SITE CONTROL
- 4.1 Site Access
- 4.2 Site Conditions
- 4.3 Work Zones
- 4.4 "Buddy System"
- 4.5 Safe Work Practices
- 4.6 Sanitation/Site Precautions

5.0 AIR MONITORING
- 5.1 Point-Source Monitoring
- 5.2 Personal Monitoring
- 5.3 Perimeter Monitoring
- 5.4 Site-Specific Air Monitoring Equipment and Frequency
- 5.5 Equipment Maintenance and Calibration
- 5.6 Monitoring Documentation

6.0 PERSONAL PROTECTIVE EQUIPMENT
- 6.1 Levels of Protection
- 6.2 Site-Specific Levels of Protection
- 6.3 Respiratory Protection
- 6.4 Care and Cleaning of Personal Protective Equipment

7.0 DECONTAMINATION PROCEDURES
- 7.1 Personnel Decontamination
- 7.2 Equipment Decontamination
- 7.3 Waste Handling Procedures

8.0 EMERGENCY PROCEDURES

9.0 TRAINING REQUIREMENTS

10.0 MEDICAL SURVEILLANCE REQUIREMENTS

11.0 HEALTH AND SAFETY PLAN APPROVAL

12.0 DECLARATION OF HEALTH AND SAFETY PLAN REVIEW

MSDSs FOR CONTAMINANTS OF CONCERN

7.0 SAMPLING AND ANALYSIS PLAN

The RA Contractor will prepare a Sampling and Analysis Plan (SAP) to address short-term and long-term groundwater monitoring requirements and the sampling requirements pertaining to the operation of the groundwater collection/treatment systems installed at the site. For the HPIA Site, the SAP will be divided into two phases: the sampling and analysis to be conducted during the start-up of the collection/treatment systems (short-term), and the long-term sampling and analysis of groundwater and of the treatment systems. A discussion of what should be considered for inclusion in the SAP for both of these phases is presented below. An example outline of a SAP is presented on Table 7-1.

7.1 Start-up Phase Sampling and Analysis

During the system start-up phase, samples from the treatment systems will be collected twice weekly for four weeks. Each sampling event will include the collection of a minimum of five samples from each treatment system. Figure 7-1 shows the sample points within each treatment system. As shown on the figure, there are two optional sampling locations (following the surge/settling tank and following the first carbon adsorber). Once collected, the samples will be properly packed and shipped to the contracted laboratory for analysis. The analytical parameters (contaminants of concern) for each sample are shown on Figure 7-1. The analytical requirements for the analyses are summarized on Table 7-2. In addition to the contaminants of concern testing, acute toxicity testing will be performed once during the start-up phase.

Following the start-up phase of the collection/treatment systems, the systems will be sampled on a monthly basis. The sampling locations and the analyses will be the same as described for the start-up phase.

Per USEPA protocol, duplicate samples and field blanks will be collected and sent to the contracted laboratory for analysis.

7.2 Long-Term Sampling and Analysis

The long-term monitoring program for the HPIA Site includes routine monitoring of the groundwater at the site, in addition to routine sampling of the treatment systems. The groundwater monitoring will include quarterly sampling of 20 existing monitoring wells at

TABLE 7-1

EXAMPLE OUTLINE OF A SAMPLING AND ANALYSIS PLAN

1.0 INTRODUCTION

2.0 DATA QUALITY OBJECTIVES

3.0 SAMPLING LOCATIONS AND FREQUENCY
- 3.1 Sample Locations
- 3.2 Sampling Frequency
- 3.3 QA/QC Samples

4.0 SAMPLE DESIGNATION

5.0 SAMPLING PROCEDURES
- 5.1 Groundwater Sampling Procedures
- 5.2 System Sampling Procedures
- 5.3 Decontamination Procedures

6.0 SAMPLING HANDLING AND ANALYSIS
- 6.1 Chain-of-Custody
- 6.2 Logbooks and Forms

7.0 SYSTEM MANAGEMENT
- 7.1 Operation Team Responsibilities
- 7.2 Reporting Requirements

8.0 REFERENCES

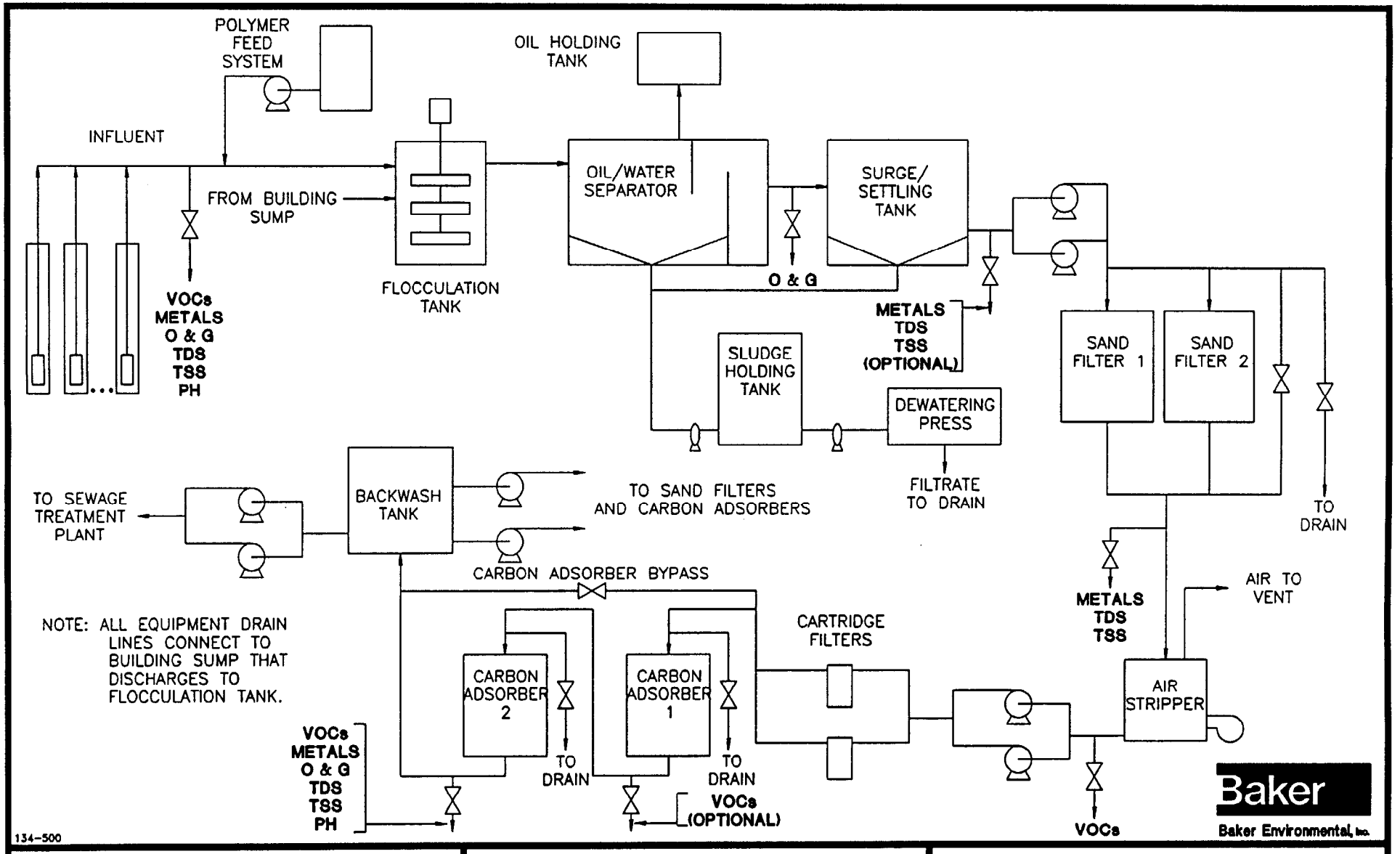

LEGEND

⧖ – SAMPLE POINTS

ANALYSES:
- VOCs – VOLATILE ORGANIC COMPOUNDS
- O & G – OIL AND GREASE
- TDS – TOTAL DISSOLVED SOLIDS
- TSS – TOTAL SUSPENDED SOLIDS

FIGURE 7-1
SAMPLING SCHEME FOR THE GROUNDWATER TREATMENT SYSTEMS AT HADNOT POINT INDUSTRIAL AREA
MARINE CORPS BASE CAMP LEJEUNE
JACKSONVILLE, NORTH CAROLINA

TABLE 7-2
ANALYTICAL REQUIREMENTS SUMMARY TABLE

Parameter	Method	Practical Quantitation Limit (µg/L)	Federal Maximum Contaminant Level[1] (µg/L)	Sample Volume Requirement	Container Type	Sample Preservation	Holding Time
Purgeable Halocarbons	EPA 601			3 x 40 ml	Glass; Teflon Lined Septum	Cool to 4°C	14 days
Bromodichloromethane		2					
Bromoform		5					
Bromomethane		2					
Carbon tetrachloride		2	5				
Chlorobenzene		2	100				
Chloroethane		2					
2-Chloroethylvinyl ether		2					
Chloroform		2					
Chloromethane		2					
Dibromochloromethane		2					
1,2-Dichlorobenzene		5	600				
1,3-Dichlorobenzene		5					
1,4-Dichlorobenzene		5	75				
Dichlorodifluoromethane		2					
1,1-Dichloroethane		2					
1,2-Dichloroethane		2	5				
1,1-Dichloroethene		2	7				
trans-1,2-Dichloroethene		2	100				
1,2-Dichloropropane		2	5				
cis-1,3-Dichloropropene		2					
trans-1,3-Dichloropropene		2					
Methylene chloride		5	5				
1,1,2,2-Tetrachloroethane		2					
Tetrachloroethene		2	5				
1,1,1-Trichloroethane		2	200				
1,1,2-Trichloroethane		2					
Trichloroethene		2	5				
Trichlorofluoromethane		2					
Vinyl chloride		5	2				
Purgeable Aromatics	EPA 602			3 x 40 ml	Glass; Teflon Lined Septum	Cool to 4°C HCl to pH <2	14 days
Benzene		2	5				
Chlorobenzene		2	100				
1,2-Dichlorobenzene		5	600				
1,3-Dichlorobenzene		5					
1,4-Dichlorobenzene		5	75				
Ethylbenzene		2	700				
Toluene		2	1000				
Xylene		2	10,000				

TABLE 7-2 (Continued)
ANALYTICAL REQUIREMENTS SUMMARY TABLE

Parameter	Method	Practical Quantitation Limit (µg/L)	Federal Maximum Contaminant Level[1] (µg/L)	Sample Volume Requirement	Container Type	Sample Preservation	Holding Time
Target Analyte List Metals				500 ml	Plastic	Cool to 4°C HNO_3 to pH <2	180 days except Mercury at 28 days
Aluminum	EPA 200.7	40	50				
Antimony	EPA 204.2	2	6				
Arsenic	EPA 206.2	5	50				
Barium	EPA 200.7	2	2000				
Beryllium	EPA 200.7	2	4				
Cadmium	EPA 213.2	1	5				
Calcium	EPA 200.7 EPA 215.1	5					
Chromium	EPA 218.2	5	100				
Cobalt	EPA 200.7	5					
Copper	EPA 200.7	7	1300				
Iron	EPA 200.7	6	300				
Lead	EPA 239.2	5	15				
Magnesium	EPA 200.7	100					
Manganese	EPA 200.7	1	50				
Mercury	EPA 245.1	0.2	2				
Nickel	EPA 200.7	20	100				
Potassium	EPA 200.7	200					
Selenium	EPA 270.2	2	50				
Silver	EPA 200.7	20	100				
Sodium	EPA 200.7	100					
Thallium	EPA 279.2	5	1				
Vanadium	EPA 200.7	7					
Zinc	EPA 200.7	50	5000				
Engineering Parameters							
Oil and Grease	EPA 413.1	2000		1000 ml	Glass	Cool to 4°C H_2SO_4 to pH <2	28 days
Total Dissolved Solids	EPA 160.1	1000	50	250 ml	Plastic	Cool to 4°C	7 days
Total Suspended Solids	EPA 160.2	1000		250 ml	Plastic	Cool to 4°C	7 days

(1) Primary and Secondary Maximum Contaminant Levels

the site (see Figure 7-2). The monitoring wells to be sampled include 16 shallow monitoring wells, 2 intermediate wells, and 2 deep wells. Additional wells may be added to the monitoring program if deemed necessary. The groundwater samples will be analyzed for the contaminants of concern. Duplicates and field blanks will be collected per USEPA protocol.

The data from the first year of sampling will be used to further characterize the aquifer, evaluate the effectiveness of the collection/treatment systems, and to identify locations for additional monitoring needs and/or additional extraction wells. Based on an evaluation of the data collected from the first year, and with the concurrence of USEPA and N.C. DEHNR, treatment system sampling may be conducted quarterly after the first year of operation.

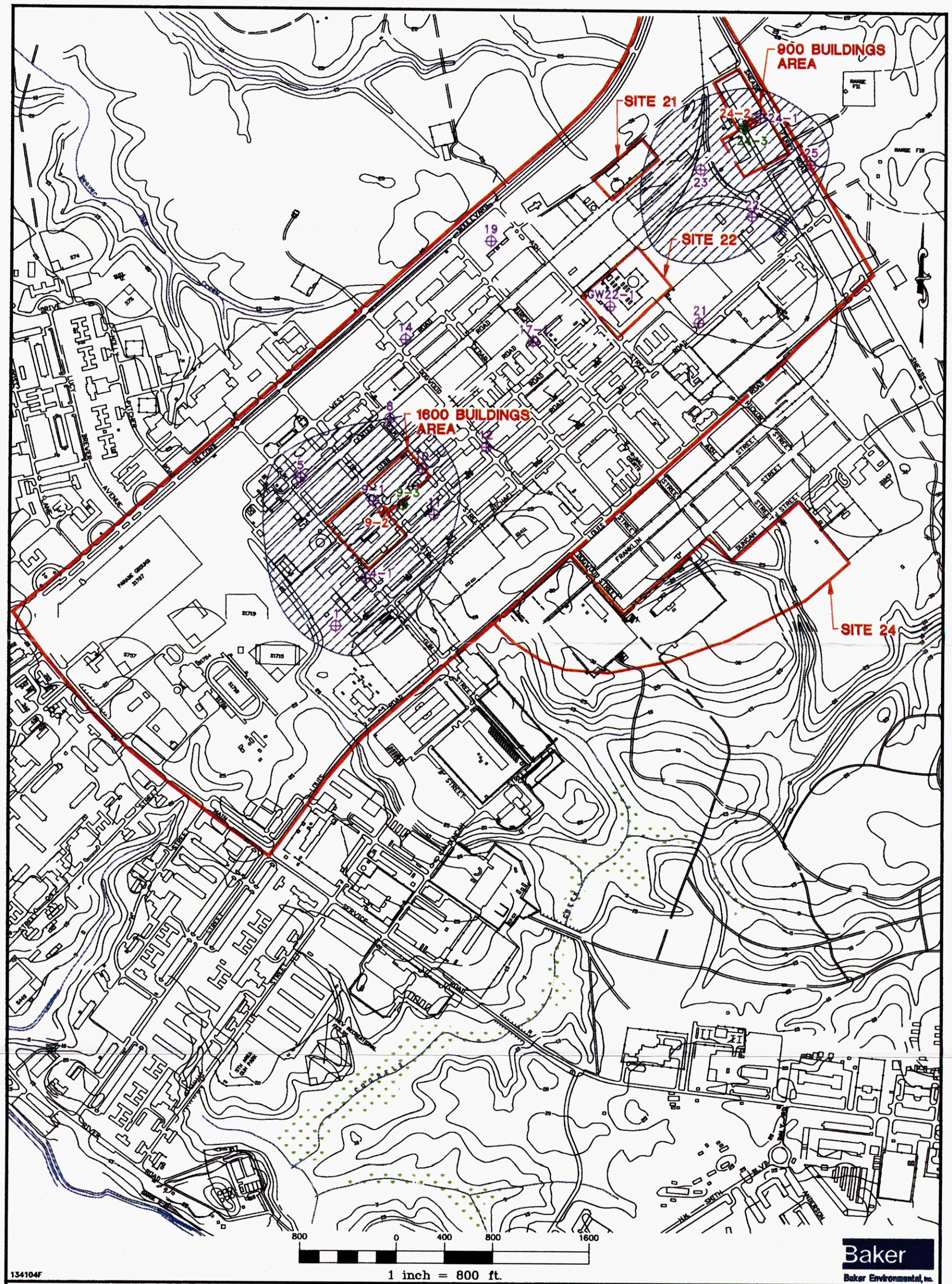

LEGEND

APPROXIMATE SOURCE AREA OF GROUNDWATER CONTAMINATION IN THE SHALLOW AQUIFER

1 EXISTING SHALLOW MONITORING WELL

24-2 EXISTING INTERMEDIATE MONITORING WELL

24-3 EXISTING DEEP MONITORING WELL

SOURCE: LANTDIV, FEBRUARY 1992

FIGURE 7-2
MONITORING WELLS INCLUDED IN THE LONG-TERM MONITORING PROGRAM
HADNOT POINT INDUSTRIAL AREA
MARINE CORPS BASE, CAMP LEJEUNE
NORTH CAROLINA

01493EE07Y

8.0 QUALITY ASSURANCE PROJECT PLAN

A site-specific Quality Assurance Project Plan (QAPP) will be prepared by the RA Contractor. The QAPP will provide guidelines for project organization and identify quality assurance/quality control (QA/QC) responsibilities of the RA Contractor during both construction and operation (i.e., sampling and analysis) of the treatment systems. Therefore, the QAPP will be divided into two sections; one pertaining to the construction-related QA/QC activities and one part pertaining to the system-operational QA/QC activities. The QAPP will be consistent with USEPA QA/QC protocol.

8.1 Construction Phase QAPP

Requirements for the construction portion of the QAPP are provided in Section 01400 of the project specifications. This specification requires the RA Contractor to develop a specific QA/QC plan to be followed during the construction phase of the RA, and assigns a QC Manager to implement the plan. A copy of Section 01400 is included as Appendix A. The QA/QC plan will define the procedures to be followed to ensure that the groundwater collection and treatment systems are installed in accordance with the RA contract plans and specifications. Part 1.7.1 of Section 01400 requires that the plan cover the following items:

1. Name and qualifications, in resume format, for the QC Manager.

2. A letter signed by an officer of the firm appointing the QC Manager and stating that he/she is responsible for managing and implementing the QC program as described in this contract. Include in this letter the QC Manager's authority to direct the removal and replacement of nonconforming work.

3. Procedures for reviewing, approving, and managing submittals. Provide the names of the persons authorized to review and certify submittals prior to approval. Provide the initial submittal or the Submittal Register as specified in Section 01300, "SUBMITTALS."

4. Testing laboratory information required by the paragraphs entitled "Accredited Laboratories" or "Testing Laboratory Requirements," as applicable.

5. A Testing Plan and Log that includes the tests required, referenced by the specification paragraph number requiring the test, the frequency, and the person responsible for each test.

6. Procedures to identify, record, track and complete rework items.

7. Documentation procedures, including proposed report formats.

8. A list of the definable features of work. A definable feature of work is a task which is separate and distinct from other tasks and requires separate control requirements. As a minimum, if approved by the Contracting Officer, consider each division of the specifications as a definable feature of work. However, at times, there may be more than one definable feature of work in each division of the specifications.

8.2 Operational Phase QAPP

The operational phase of the QAPP will address the QA/QC steps and procedures that will be followed during the operation of the collection/treatment system. This plan will focus on identifying QA/QC procedures and references to be used to verify that the system is operating as designed, and that treatment goals are being achieved.

The Plan will also identify the QA/QC procedures that will be used to verify that proper sampling and analyses techniques are used to monitor system performance. A typical outline for a QAPP pertaining to the sampling and analysis activities is presented on Table 8-1.

TABLE 8-1

EXAMPLE OUTLINE FOR A QUALITY ASSURANCE PROJECT PLAN PERTAINING TO SAMPLING AND ANALYSIS ACTIVITIES

1.0 INTRODUCTION

2.0 SCOPE OF QUALITY ASSURANCE PROJECT PLAN

3.0 PROJECT DESCRIPTION

4.0 PROJECT ORGANIZATION

5.0 QUALITY ASSURANCE OBJECTIVES FOR DATA MEASUREMENT

6.0 SAMPLING PROCEDURES

7.0 SAMPLE AND DOCUMENT CUSTODY PROCEDURES

8.0 CALIBRATION PROCEDURES AND FREQUENCY

9.0 ANALYTICAL PROCEDURES

10.0 DATA REDUCTION, VALIDATION, AND REPORTING

11.0 INTERNAL QUALITY CONTROL CHECKS

12.0 PERFORMANCE AND SYSTEM AUDITS

13.0 PREVENTIVE MAINTENANCE

14.0 DATA MEASUREMENT

15.0 CORRECTIVE ACTION

16.0 QUALITY ASSURANCE REPORTING PROCEDURES

9.0 ENVIRONMENTAL MONITORING PLAN

No specific Environmental Monitoring Plan will be prepared for the HPIA Site. All environmental monitoring will be addressed in the Sampling and Analysis Plan and/or in the Health and Safety Plan.

10.0 PROJECT SCHEDULE

The construction activities for the proposed IRA at HPIA have been divided into three phases: the RA Contractor Procurement Phase, the System Construction and Installation Phase, and the System Start-up Phase. The RA Contractor Procurement Phase will consist of the solicitation of bids, the bid opening, the tabulation and review of bids, contract award recommendation, the execution of contract documents, and the issuance of the notice to proceed. The activities of the System Construction and Installation Phase will include site preparation, extraction well and pump installation, and treatment systems construction. The System Start-up Phase will consist of the start-up activities. Figure 10-1 presents the proposed schedule for these activities.

The RA Contractor Procurement Phase is estimated to take approximately 90 days, which includes time for replacement of the RA Contractor in the event that USEPA and/or the N.C. DEHNR disapproves of the first selected contractor.

Approximately 120 days will be allotted for the System Construction and Installation Phase. Construction activities associated with the RA will not likely be beyond the scope of a typical groundwater remediation project. Major system components will consist of standard unit processes (i.e., oil/water separator, holding tanks, pumps, air stripping units, etc.), therefore, lead times associated with their order and delivery will be critical to the timely completion of the project.

The System Start-up Phase will require approximately 90 days for the RA Contractor to start up the groundwater collection and treatment systems and to monitor them for any problems. This amount of time allows for minor adjustments and/or revisions that may be needed.

Once the treatment systems are on-line, they will be monitored and operated until the remediation goals have been met as described in Section 7.0. Based on an annual review of the monitoring results, additional extraction wells may be added to the systems. Additional wells may be added over a several year period to each treatment area, resulting in a maximum of 16 extraction wells per area. Note that the operation of the system is expected to last for several years.

FIGURE 10-1

PROPOSED CONSTRUCTION SCHEDULE
INTERIM REMEDIAL ACTION FOR THE HADNOT POINT INDUSTRIAL AREA
SHALLOW AQUIFER

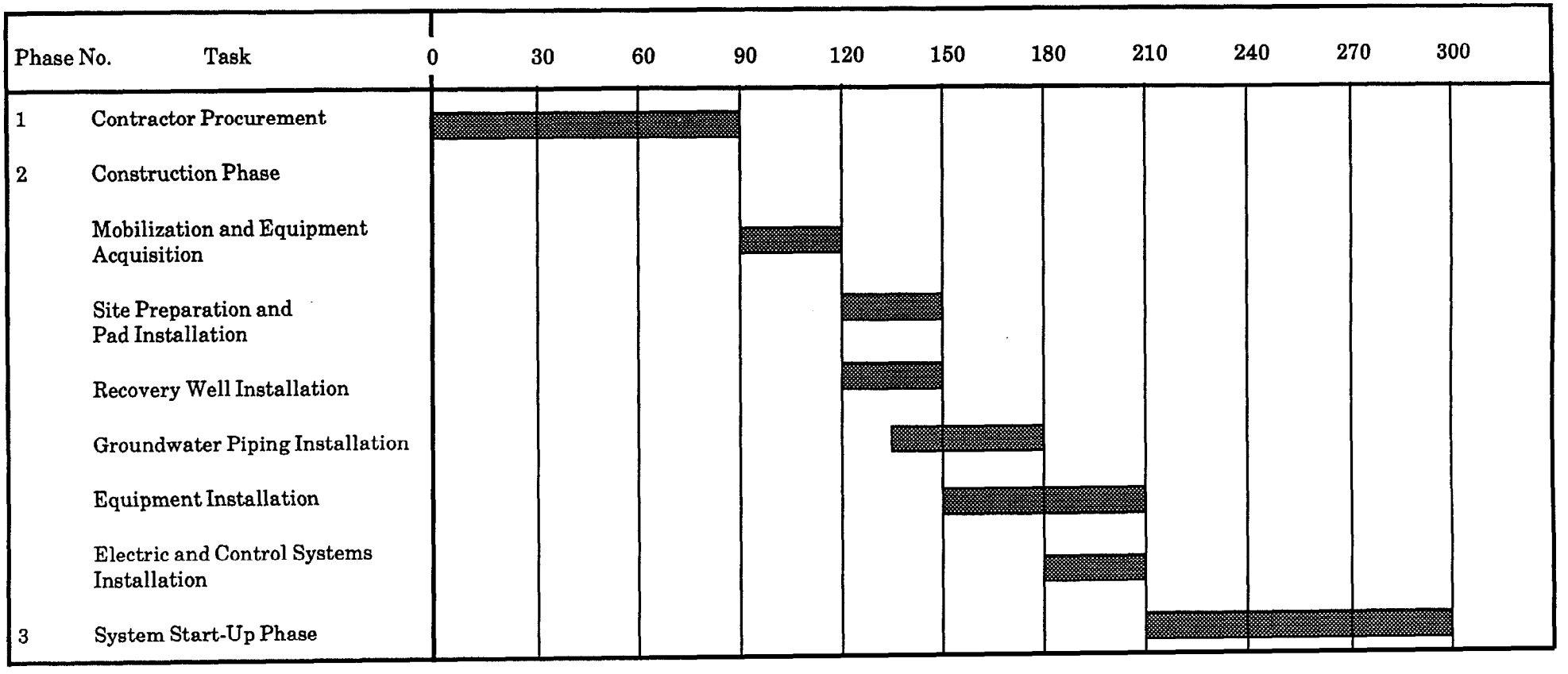

Appendix A
Section 01400 Quality Control

SECTION 01400

QUALITY CONTROL

PART 1 GENERAL

1.1 SUMMARY (Not Used)

1.2 REFERENCES

The publications listed below form a part of this specification to the extent referenced. The publications are referred to in the text by the basic designation only.

AMERICAN SOCIETY FOR TESTING AND MATERIALS (ASTM)

ASTM A 880	1989 Criteria for Use in Evaluation of Testing Laboratories and Organizations for Examination and Inspection of Steel, Stainless Steel, and Related Alloys
ASTM C 1077	1991 (Rev. A) Laboratories Testing Concrete and Concrete Aggregates for Use in Construction and Criteria for Laboratory Evaluation
ASTM D 3666	1991 (Rev. A) Evaluating and Qualifying Agencies and Inspecting Bituminous Paving Materials
ASTM D 3740	1988 Evaluation of Agencies Engaged in the Testing and/or Inspection of Soil and Rock as Used in Engineering Design and Construction
ASTM E 329	1990 Evaluation of Testing and Inspection Agencies as Used in Construction
ASTM E 543	1989 (Rev. A) Determining the Qualification of Nondestructive Testing Agencies

1.3 SUBMITTALS

Submit the following in accordance with Section 01300, "Submittals."

1.3.1 SD-18, Records

a. Quality Control (QC) plan G

Submit a QC plan within 15 calendar days after receipt of Notice of Award.

1.4 INFORMATION FOR THE CONTRACTING OFFICER

Deliver the following to the Contracting Officer:

a. Combined Contractor Production Report/Contractor Quality Control Report (1 sheet): Original and 1 copy, by 10:00 AM the next working day after each day that work is performed;

b. QC Specialist Reports: Originals and 1 copy by 10:00 AM the next working day after each day that work is performed;

c. Testing Plan and Log, 1 copy, at the end of each month;

d. Monthly Summary Report of Field Tests: Original and 1 copy attached to Contractor Quality Control Report at the end of each month;

e. QC Meeting Minutes: 1 copy, within 2 calendar days of the meeting;

f. Rework Items List: 1 copy, by the last working day of the month and;

g. QC Certifications: As required by the paragraph entitled "QC Certifications".

1.5 QC PROGRAM REQUIREMENTS

Establish and maintain a QC program as described in this section. The QC program consists of a QC Organization, a QC Plan, a Coordination and Mutual Understanding Meeting, QC meetings, three phases of control, submittal review and approval except those designated for Contracting Officer approval, testing , and QC certifications and documentation necessary to provide materials, equipment, workmanship, fabrication, construction and operations which comply with the requirements of this Contract. The QC program shall cover construction operations on-site and off-site and shall be keyed to the proposed construction sequence.

1.6 QC ORGANIZATION

1.6.1 QC Manager

1.6.1.1 Duties

Provide a QC Manager at the work site to manage and implement the QC program. The QC Manager is required to attend the Coordination and Mutual Understanding Meeting, conduct the QC meetings, perform the three phases of control, perform submittal review and approval except those designated for Contracting Officer approval, ensure testing is performed and prepare QC certifications and documentation required in this Contract. In addition to managing and implementing the QC program, the QC Manager may perform the duties of project superintendent.

1.6.1.2 Qualifications

An individual with a minimum of 3 years experience as a foreman, superintendent, inspector, QC Manager, project manager, or construction manager on similar size and type construction contracts which included the major trades that are part of this Contract.

1.7 QC PLAN

1.7.1 Requirements

Provide for approval by the Contracting Officer, a QC plan that covers, both on-site and off-site work and includes, the following:

a. Name and qualifications, in resume format, for the QC Manager.

e. A letter signed by an officer of the firm appointing the QC Manager and stating that he/she is responsible for managing and implementing the QC program as described in this contract. Include in this letter the QC Manager's authority to direct the removal and replacement of non-conforming work.

f. Procedures for reviewing, approving and managing submittals. Provide the names of the persons authorized to review and certify submittals prior to approval. Provide the initial submittal or the Submittal Register as specified in Section 01300, "SUBMITTALS".

g. Testing laboratory information required by the paragraphs entitled "Accredited Laboratories" or "Testing Laboratory Requirements", as applicable.

h. A Testing Plan and Log that includes the tests required, referenced by the specification paragraph number requiring the test, the frequency, and the person responsible for each test.

i. Procedures to identify, record, track and complete rework items.

j. Documentation procedures, including proposed report formats.

k. A list of the definable features of work. A definable feature of work is a task which is separate and distinct from other tasks and requires separate control requirements. As a minimum, if approved by the Contracting Officer, consider each division of the specifications as a definable feature of work. However, at times, there may be more than one definable feature of work in each division of the specifications.

1.7.2 Preliminary Work Authorized Prior to Approval

The only work that is authorized to proceed prior to the approval of the QC plan is mobilization and surveying.

1.7.3 Approval

Approval of the QC plan is required prior to the start of construction. The Contracting Officer reserves the right to require changes in the QC plan and operations as necessary to ensure the specified quality of work. The Contracting Officer reserves the right to interview any member of the QC organization at any time in order to verify his/her submitted qualifications.

1.7.4 Notification of Changes

Notify the Contracting Officer, in writing, of any proposed change, including changes in the QC organization personnel, a minimum of seven calendar days prior to a proposed change. Proposed changes must be approved by the Contracting Officer.

1.8 COORDINATION AND MUTUAL UNDERSTANDING MEETING

After submission of the QC Plan, but prior to the start of construction, meet with the Contracting Officer to discuss the QC program required by this Contract. The purpose of this meeting is to develop a mutual understanding of the QC details, including forms to be used for documentation, administration for on-site and off-site work, and the coordination of the Contractor's management, production and QC personnel with the Contracting Officer. As a minimum, the Contractor's personnel required to attend shall include the project manager, project superintendent and QC Manager. Minutes of the meeting shall be prepared by the QC Manager and signed by both the Contractor and the Contracting Officer.

1.9 QC MEETINGS

After the start of construction, the QC Manager shall conduct QC meetings once every two weeks at the work site with the project superintendent. The QC Manager shall prepare the minutes of the meeting and provide a copy to the Contracting Officer within 2 working days after the meeting. The Contracting Officer may attend these meetings. The QC Manager shall notify the Contracting Officer at least 48 hours in advance of each meeting. As a minimum, the following shall be accomplished at each meeting:

a. Review the minutes of the previous meeting;

b. Review the schedule and the status of work:

- Work or testing accomplished since last meeting
- Rework items identified since last meeting
- Rework items completed since last meeting;

c. Review the status of submittals:

- Submittals reviewed and approved since last meeting
- Submittals required in the near future;

d. Review the work to be accomplished in the next 2 weeks and documentation required. Schedule the three phases of control and

testing:

- Establish completion dates for rework items
- Preparatory phases required
- Initial phases required
- Follow-up phases required
- Testing required
- Status of off-site work or testing
- Documentation required;

e. Resolve QC and production problems; and

f. Address items that may require revising the QC plan:

- Changes in QC organization personnel
- Changes in procedures.

1.10 THREE PHASES OF CONTROL

The QC Manager shall perform the three phases of control to ensure that work complies with Contract requirements. The Three Phases of Control shall adequately cover both on-site and off-site work and shall include the following for each definable features of work: A definable feature of work is a task which is separate and distinct from other tasks and requires separate control requirements.

1.10.1 Preparatory Phase

Notify the Contracting Officer at least 2 work days in advance of each preparatory phase. Conduct the preparatory phase with the superintendent, and the foreman responsible for the definable feature. Document the results of the preparatory phase actions in the daily Contractor Quality Control Report. Perform the following prior to beginning work on each definable feature of work:

a. Review each paragraph of the applicable specification sections;

b. Review the Contract drawings;

c. Verify that appropriate shop drawings and submittals for materials and equipment have been submitted and approved. Verify receipt of approved factory test results, when required;

d. Review the testing plan and ensure that provisions have been made to provide the required QC testing;

e. Examine the work area to ensure that the required preliminary work has been completed;

f. Examine the required materials, equipment and sample work to ensure that they are on hand and conform to the approved shop drawings and submitted data;

g. Review the safety plan and appropriate activity hazard analysis to ensure that applicable safety requirements are met, and that

required Material Safety Data Sheets (MSDS) are submitted; and

h. Discuss construction methods;

1.10.2 Initial Phase

Notify the Contracting Officer at least 2 work days in advance of each initial phase. When construction crews are ready to start work on a definable feature of work, conduct the initial phase with the superintendent, and the foreman responsible for that definable feature of work. Observe the initial segment of the definable feature of work to ensure that the work complies with Contract requirements. Document the results of the initial phase in the daily Contractor Quality Control Report. Repeat the initial phase for each new crew to work on-site, or when acceptable levels of specified quality are not being met. Perform the following for each definable feature of work:

a. Establish the quality of workmanship required;

b. Resolve conflicts;

c. Review the Safety Plan and the appropriate activity hazard analysis to ensure that applicable safety requirements are met; and

d. Ensure that testing is performed by the approved laboratory.

1.10.3 Follow-Up Phase

Perform the following for on-going work daily, or more frequently as necessary until the completion of each definable feature of work and document in the daily Contractor Quality Control Report:

a. Ensure the work is in compliance with Contract requirements;

b. Maintain the quality of workmanship required;

c. Ensure that testing is performed by the approved laboratory; and

d. Ensure that rework items are being corrected.

1.10.4 Notification of Three Phases of Control for Off-Site Work

Notify the Contracting Officer at least two weeks prior to the start of the preparatory and initial phases.

1.11 SUBMITTAL REVIEW AND APPROVAL

Procedures for submission, review and approval of submittals are described in Section 01300, "Submittals."

1.12 TESTING

Except as stated otherwise in the specification sections, perform sampling and testing required under this Contract.

1.12.1 Testing Laboratory Requirements

Provide an independent testing laboratory qualified to perform sampling and tests required by this Contract. When the proposed testing laboratory is not accredited by an acceptable accreditation program as described by the paragraph entitled "Accredited Laboratories", submit to the Contracting Officer for approval, certified statements signed by an official of the testing laboratory attesting that the proposed laboratory meets or conforms to the following requirements:

a. Sampling and testing shall be under the technical direction of a Registered Professional Engineer (P.E) with at least 5 years of experience in construction material testing.

b. Laboratories engaged in testing of concrete and concrete aggregates shall meet the requirements of ASTM C 1077.

c. Laboratories engaged in testing of bituminous paving materials shall meet the requirements of ASTM D 3666.

d. Laboratories engaged in testing of soil and rock, as used in engineering design and construction, shall meet the requirements of ASTM D 3740.

e. Laboratories engaged in inspection and testing of steel, stainless steel, and related alloys will be evaluated according to ASTM A 880. Laboratories shall meet the requirements of ASTM E 329.

f. Laboratories engaged in nondestructive testing (NDT) shall meet the requirements of ASTM E 543.

1.12.2 Accredited Laboratories

Acceptable accreditation programs are the National Institute of Standards and Technology (NIST) National Voluntary Laboratory Accreditation Program (NVLAP), the American Association of State Highway and Transportation Officials (AASHTO) program and the American Association for Laboratory Accreditation (A2LA) program. Furnish to the Contracting Officer, a copy of the Certificate of Accreditation, Scope of Accreditation and latest directory of the accrediting organization for accredited laboratories. The scope of the laboratory's accreditation shall include the test methods required by the Contract.

1.12.3 Inspection of Testing Laboratories

Prior to approval of non-accredited laboratories, the proposed testing laboratory facilities and records may be subject to inspection by the Contracting Officer. Records subject to inspection include equipment inventory, equipment calibration dates and procedures, library of test procedures, audit and inspection reports by agencies conducting laboratory evaluations and certifications, testing and management personnel qualifications, test report forms, and the internal QC procedures.

1.12.4 Capability Check

The Contracting Officer retains the right to check laboratory equipment in the proposed laboratory and the laboratory technician's testing procedures, techniques, and other items pertinent to testing, for compliance with the standards set forth in this Contract.

1.12.5 Test Results

Cite applicable Contract requirements, tests or analytical procedures used. Provide actual results and include a statement that the item tested or analyzed conforms or fails to conform to specified requirements. Conspicuously stamp the cover sheet for each report in large red letters "CONFORMS" or "DOES NOT CONFORM" to the specification requirements, whichever is applicable. Test results shall be signed by a testing laboratory representative authorized to sign certified test reports. Furnish the signed reports, certifications, and other documentation to the Contracting Officer via the QC Manager. Furnish a summary report of field tests at the end of each month. Attach a copy of the summary report to the last daily Contractor Quality Control Report of each month.

1.13 QC CERTIFICATIONS

1.13.1 Contractor Quality Control Report Certification

Each Contractor Quality Control Report shall contain the following statement: "On behalf of the Contractor, I certify that this report is complete and correct and equipment and material used and work performed during this reporting period is in compliance with the contract drawings and specifications to the best of my knowledge, except as noted in this report".

1.13.2 Invoice Certification

Furnish a certificate to the Contracting Officer with each payment request, signed by the QC Manager, attesting that as-built drawings are current and attesting that the work for which payment is requested, including stored material, is in compliance with contract requirements.

1.13.3 Completion Certification

Upon completion of work under this Contract, the QC Manager shall furnish a certificate to the Contracting Officer attesting that "the work has been completed, inspected, tested and is in compliance with the Contract".

1.14 DOCUMENTATION

Maintain current and complete records of on-site and off-site QC program operations and activities.

1.14.1 Contractor Production Report

Reports are required for each day that work is performed and shall be attached to the Contractor Quality Control Report prepared for the same day. Account for each calendar day throughout the life of the Contract.

The reporting of work shall be identified by terminology consistent with the construction schedule. Contractor Production Reports are to be prepared, signed and dated by the project superintendent and shall contain the following information:

a. Date of report, report number, name of contractor, Contract number, title and location of Contract and superintendent present.

b. Weather conditions in the morning and in the afternoon including maximum and minimum temperatures.

c. A list of Contractor and subcontractor personnel on the work site, their trades, employer, work location, description of work performed and hours worked.

d. A list of job safety actions taken and safety inspections conducted. Indicate that safety requirements have been met including the results on the following:
   - Was a job safety meeting held? (If YES attach a copy of the meeting minutes)
   - Were there any lost time accidents? (If YES attach a copy of the completed OSHA report)
   - Was trenching/scaffold/high voltage electrical/high work done? (If YES attach a statement or checklist showing inspection performed)
   - Was hazardous material/waste released into the environment? meetings held and accidents that happened.

e. A list of equipment/material received each day that is incorporated into the job.

f. A list of construction and plant equipment on the work site including the number of hours used, idle and down for repair.

g. Include a "remarks" section in this report which will contain pertinent information including directions received, problems encountered during construction, work progress and delays, conflicts or errors in the drawings or specifications, field changes, safety hazards encountered, instructions given and corrective actions taken, delays encountered and a record of visitors to the work site.

1.14.2 Contractor Quality Control Report

Reports are required for each day that work is performed and for every seven consecutive calendar days of no-work and on the last day of a no-work period. Account for each calendar day throughout the life of the Contract. The reporting of work shall be identified by terminology consistent with the construction schedule. Contractor Quality Control Reports are to be prepared, signed and dated by the QC Manager and shall contain the following information:

a. Identify the control phase and the definable feature of work.

b. Results of the Preparatory Phase meetings held including the

location of the definable feature of work and a list of personnel present at the meeting. Indicate in the report that for this definable feature of work, the drawings and specifications have been reviewed, submittals have been approved, materials comply with approved submittals, materials are stored properly, preliminary work was done correctly, the testing plan has been reviewed, and work methods and schedule have been discussed.

c. Results of the Initial Phase meetings held including the location of the definable feature of work and a list of personnel present at the meeting. Indicate in the report that for this definable feature of work the preliminary work was done correctly, samples have been prepared and approved, the workmanship is satisfactory, test results are acceptable, work is in compliance with the Contract, and the required testing has been performed and include a list of who performed the tests.

d. Results of the Follow-up Phase inspections held including the location of the definable feature of work. Indicate in the report for this definable feature of work that the work complies with the Contract as approved in the Initial Phase, and that required testing has been performed and include a list of who performed the tests.

e. Results of the three phases of control for off-site work, if applicable, including actions taken.

f. List the rework items identified, but not corrected by close of business.

g. List the rework items corrected from the rework items list along with the corrective action taken.

h. Include a "remarks" section in this report which will contain pertinent information including directions received, quality control problem areas, deviations from the QC plan, construction deficiencies encountered, QC meetings held, acknowledgement that as-built drawings have been updated, corrective direction given by the QC Organization and corrective action taken by the Contractor.

i. Contractor Quality Control Report certification.

1.14.3 Testing Plan and Log

As tests are performed, the QC Manager shall record on the "Testing Plan and Log" the date the test was conducted, the date the test results were forwarded to the Contracting Officer, remarks and acknowledgement that an accredited or Contracting Officer approved testing laboratory was used. Attach a copy of the updated "Testing Plan and Log" to the last daily Contractor Quality Control Report of each month.

1.14.4 Rework Items List

The QC Manager shall maintain a list of work that does not comply with the Contract, identifying what items need to be reworked, the date the item was

originally discovered, and the date the item was corrected. There is no requirement to report a rework item that is corrected the same day it is discovered. Attach a copy of the "Contractor Rework Items List" to the last daily Contractor Quality Control Report of each month. The Contractor shall be responsible for including on this list items needing rework including those identified by the Contracting Officer.

1.14.5 As-Built Drawings

The QC Manager is required to review the as-built drawings required by Section 01010, "General Paragraphs", to ensure that as-built drawings are kept current on a daily basis and marked to show deviations which have been made from the Contract drawings. The QC Manager [or QC Specialist assigned to an area of responsibility] shall initial each deviation and each revision. Upon completion of work, the QC Manager shall furnish a certificate attesting to the accuracy of the as-built drawings prior to submission to the Contracting Officer.

1.14.6 Report Forms

The following forms, which are attached at the end of this section, are acceptable for providing the information required by the paragraph entitled "Documentation". While use of these specific formats are not required, any other format used shall contain the same information:

a. Combined Contractor Production Report and Contractor Quality Control Report (1 sheet), with separate continuation sheet

b. Testing Plan and Log

c. Rework Items List

PART 2 PRODUCTS

Not used.

PART 3 EXECUTION

Not used.

-- End of Section --

CONTRACTOR PRODUCTION REPORT

(ATTACH ADDITIONAL SHEETS IF NECESSARY)

		DATE
CONTRACT NO.	TITLE AND LOCATION	REPORT NO.
CONTRACTOR	SUPERINTENDENT	
AM WEATHER / PM WEATHER	MAX TEMP: °F	MIN TEMP: °F

WORK PERFORMED TODAY

WORK LOCATION AND DESCRIPTION	EMPLOYER	NUMBER	TRADE	HRS

JOB SAFETY

WAS A JOB SAFETY MEETING HELD THIS DATE? ☐ YES ☐ NO
(If YES attach copy of the meeting minutes)

WERE THERE ANY LOST TIME ACCIDENTS THIS DATE? ☐ YES ☐ NO
(If YES attach copy of completed OSHA report)

WAS TRENCHING/SCAFFOLD/HV ELECTRICAL/HIGH WORK DONE? ☐ YES ☐ NO
(If YES attach statement or checklist showing inspection performed)

WAS HAZARDOUS MATERIAL/WASTE RELEASED INTO THE ENVIRONMENT? ☐ YES ☐ NO
(If YES attach description of incident and proposed action)

TOTAL WORK HOURS ON JOB SITE THIS DATE	
CUMULATIVE TOTAL OF WORK HOURS FROM PREVIOUS REPORT	
TOTAL WORK HOURS FROM START OF CONSTRUCTION	

LIST SAFETY ACTIONS TAKEN TODAY/SAFETY INSPECTIONS CONDUCTED

SAFETY REQUIREMENTS HAVE BEEN MET.

EQUIPMENT/MATERIAL RECEIVED TODAY TO BE INCORPORATED IN JOB

CONSTRUCTION AND PLANT EQUIPMENT ON JOB SITE TODAY. INCLUDE NUMBER OF HOURS USED TODAY

REMARKS

CONTRACTOR/SUPERINTENDENT

DATE

FORM 01400-1 6/91

CONTRACTOR QUALITY CONTROL REPORT

(ATTACH ADDITIONAL SHEETS IF NECESSARY)

DATE

PHASE	Y - YES; N - NO. SEE REMARKS; BLANK - NOT APPLICABLE		IDENTIFY DEFINABLE FEATURE OF WORK, LOCATION AND *LIST PERSONNEL PRESENT*
PREPARATORY	THE PLANS AND SPECS HAVE BEEN REVIEWED. THE SUBMITTALS HAVE BEEN APPROVED.		
	MATERIALS COMPLY WITH APPROVED SUBMITTALS.		
	MATERIALS ARE STORED PROPERLY.		
	PRELIMINARY WORK WAS DONE CORRECTLY.		
	TESTING PLAN HAS BEEN REVIEWED.		
	WORK METHOD AND SCHEDULE DISCUSSED.		

			TESTING PERFORMED & WHO PERFORMED TEST
INITIAL	PRELIMINARY WORK WAS DONE CORRECTLY.		
	SAMPLE HAS BEEN PREPARED/APPROVED.		
	WORKMANSHIP IS SATISFACTORY.		
	TEST RESULTS ARE ACCEPTABLE.		
	WORK IS IN COMPLIANCE WITH THE CONTRACT.		

			TESTING PERFORMED & WHO PERFORMED TEST
FOLLOW-UP	WORK COMPLIES WITH CONTRACT AS APPROVED IN INITIAL PHASE.		

REWORK ITEMS IDENTIFIED TODAY (NOT CORRECTED BY CLOSE OF BUSINESS)	REWORK ITEMS CORRECTED TODAY (FROM REWORK ITEMS LIST)

REMARKS

On behalf of the contractor, I certify that this report is complete and correct and equipment and material used and work performed during this reporting period is in compliance with the contract drawings and specifications to the best of my knowledge except as noted in this report.

AUTHORIZED QC MANAGER AT SITE

DATE

GOVERNMENT QUALITY ASSURANCE REPORT

DATE

QUALITY ASSURANCE REPRESENTATIVE'S REMARKS AND/OR EXCEPTIONS TO THE REPORT

GOVERNMENT QUALITY ASSURANCE REPRESENTATIVE

DATE

FORM 01400-1 6/91

Sheet of

CONTRACTOR QUALITY CONTROL REPORT CONTINUATION SHEET

(ATTACH ADDITIONAL SHEETS IF NECESSARY)

DATE	
CONTRACT NO.	REPORT NO.

PHASE	Y - YES; N - NO, SEE REMARKS; BLANK - NOT APPLICABLE		IDENTIFY DEFINABLE FEATURE OF WORK, LOCATION AND *LIST PERSONNEL PRESENT*
PREPARATORY	THE PLANS AND SPECS HAVE BEEN REVIEWED.		
	THE SUBMITTALS HAVE BEEN APPROVED.		
	MATERIALS COMPLY WITH APPROVED SUBMITTALS.		
	MATERIALS ARE STORED PROPERLY.		
	PRELIMINARY WORK WAS DONE CORRECTLY.		
	TESTING PLAN HAS BEEN REVIEWED.		
	WORK METHOD AND SCHEDULE DISCUSSED.		

PHASE	Y - YES; N - NO, SEE REMARKS; BLANK - NOT APPLICABLE		IDENTIFY DEFINABLE FEATURE OF WORK, LOCATION AND *LIST PERSONNEL PRESENT*	TESTING PERFORMED & WHO PERFORMED TEST
INITIAL	PRELIMINARY WORK WAS DONE CORRECTLY.			
	SAMPLE HAS BEEN PREPARED/APPROVED.			
	WORKMANSHIP IS SATISFACTORY.			
	TEST RESULTS ARE ACCEPTABLE.			
	WORK IS IN COMPLIANCE WITH THE CONTRACT.			

FORM 01400 2 6/91

Sheet of

CONTRACTOR QUALITY CONTROL REPORT CONTINUATION SHEET

(ATTACH ADDITIONAL SHEETS IF NECESSARY)

CONTRACT NO.	DATE
	REPORT NO.

PHASE	Y - YES; N - NO, SEE REMARKS; BLANK - NOT APPLICABLE	IDENTIFY DEFINABLE FEATURE OF WORK, LOCATION AND *LIST PERSONNEL PRESENT*	TESTING PERFORMED & WHO PERFORMED TEST
FOLLOW-UP	WORK COMPLIES WITH CONTRACT AS APPROVED IN INITIAL PHASE.		

FORM 01400-2 6-91

(Back)

Sheet of

TESTING PLAN AND LOG

CONTRACT NUMBER	PROJECT TITLE AND LOCATION	CONTRACTOR

SPECIFICATION SECTION AND PARAGRAPH NUMBER	ITEM OF WORK	TEST REQUIRED	ACCREDITED/ APPROVED LAB		SAMPLED BY	TESTED BY	LOCATION OF TEST		FREQUENCY	DATE COMPLETE	DATE FORWARDED TO RO/CC	REMARKS
			YES	NO			ON SITE	OFF SITE				

Page _____ of _____

REWORK ITEMS LIST

Contract No. and Title:_____

Contractor:_____

NUMBER	DATE IDENTIFIED	DESCRIPTION	CONTRACT REQUIREMENT (Spec. Section and Par. No., Drawing No. and Detail No., etc.)	ACTION TAKEN BY CQC REP.	RESOLUTION	DATE COMPLETED