03.05 - 10/01/98

02339

FINAL

~~DRAFT~~

WORK PLAN
FOR
MAINTENANCE AT RANGES I-1, B-12, AND F-11
MCB CAMP LEJEUNE, NORTH CAROLINA

Prepared for:

DEPARTMENT OF THE NAVY
Contract No. N62470-97-D-5000
Atlantic Division
Naval Facilities Engineering Command
6500 Hampton Boulevard
Building A (South East Wing) 3rd Floor
Norfolk, VA 23508

Prepared by:

OHM Remediation Services Corp.
5445 Triangle Parkway, Suite 400
Norcross, GA 30092

Reviewed by:

James A. Dunn, Jr., P.E.
Senior Project Manager

Steven Offner
Technical Manager

John P. Franz, P.E.
Program Manager

October 1998
Delivery Order 0017
OHM Project No. 920901

TABLE OF CONTENTS

1.0 INTRODUCTION 1-1

1.1 SITE BACKGROUND 1-1
1.2 SITE DESCRIPTION 1-1
1.3 MAINTENANCE ACTIVITY OBJECTIVES FOR SOIL 1-2
1.4 REFERENCES 1-2

2.0 PRE-CONSTRUCTION ACTIVITIES 2-1

2.1 PRE-CONSTRUCTION SUBMITTALS 2-1
2.2 PERMITS 2-1
2.3 PROCUREMENT 2-1
2.4 PRE-CONSTRUCTION MEETING 2-2

3.0 SYSTEM CONSTRUCTION TASKS AND METHODS 3-1

3.1 MOBILIZATION 3-1
3.2 SITE PREPARATION 3-1
3.3 UTILITY CLEARANCES 3-2
3.4 PRE-EXCAVATION FIELD SCREENING/SITE CHARACTERIZATION 3-2
3.5 CLEARING AND GRUBBING 3-3
3.6 BERM SOIL EXCAVATION 3-3
3.7 EXCAVATED MATERIAL HANDLING AND SCREENING 3-3
3.8 SOIL STABILIZATION 4-3
3.9 BERM RESTORATION 3-4
3.10 EXCESS NON-BERM SOIL EXCAVATION 3-4
3.11 CONCRETE FOUNDATION FOR BULLET TRAP 3-5
3.12 BULLET TRAP WITH DUST COLLECTOR 3-5
3.13 WALL CONSTRUCTION 3-5
3.14 BAFFLE CONSTRUCTION 3-6
3.15 SIDEWALK CONSTRUCTION 3-6
3.16 SITE DRAINAGE AND RECEGETATION 3-6

4.0 ELECTRICAL POWER DISTRIBUTION 4-1

5.0 DEMOBILIZATION AND FINAL REPORT 5-1

6.0 SCHEDULE 6-1

TABLE OF CONTENTS

APPENDICES
APPENDIX A HEALTH AND SAFETY PLAN
APPENDIX B QUALITY CONTROL PLAN (INCLUDING SUBMITTAL REGISTER)
APPENDIX C SAMPLING AND ANALYSIS PLAN
APPENDIX D ENVIRONMENTAL PROTECTION PLAN
APPENDIX E TRANSPORTATION AND DISPOSAL PLAN

FIGURES
FIGURE A VICINITY MAP
FIGURE 1 RANGE I-1 EXISTING PLAN VIEW
FIGURE 2 RANGE I-1 EXISTING SECTION
FIGURE 3 RANGE I-1 PROPOSED PLAN VIEW
FIGURE 4 RANGE I-1 PROPOSED BERM AND BULLET TRAP SECTION
FIGURE 5 RANGE B-12 EXISTING PLAN VIEW
FIGURE 6 RANGE B-12 PROPOSED PLAN VIEW
FIGURE 7 RANGE B-12 PROPOSED BERM AND BULLET TRAP SECTION
FIGURE 8 RANGE F-11 EXISTING PLAN VIEW
FIGURE 9 RANGE F-11 PROPOSED PLAN VIEW
FIGURE 10 RANGE F-11 PROPOSED BERM AND BULLET TRAP SECTION
FIGURE 11 OLD AND NEW WALLS
FIGURE 12 NEW BAFFLE DETAILS
FIGURE 13 RANGE I-1 ELECTRICAL PLANS
FIGURE 14 RANGE B-12 ELECTRICAL PLANS
FIGURE 15 RANGE F-11 ELECTRICAL PLANS

1.0 INTRODUCTION

This Maintenance Activity Work Plan presents OHM Remediation Services Corp.'s (OHM) approach to implementation of the scope of work under Delivery Order No. 0017 of Navy Atlantic Division (LANTDIV) Contract N62470-97-D-5000. The elements of this work plan are based on the OHM Proposal/Cost Estimate for Ranges I-1, B-12, and F-11 Remediation dated September 1998 and the Planned Action New Ranges Email dated August 10, 1998.

This work plan identifies and describes how OHM will implement the major tasks encompassing the removal and separation of bullet fragments, chemical stabilization of lead-contaminated soil, and site restoration at Ranges I-1, B-12, and F-11 in conformance with the contract requirements. It includes the following sections:

- Section 2.0 Pre-construction Activities
- Section 3.0 System Construction Tasks and Methods
- Section 4.0 Electrical Power Installation
- Section 5.0 Demobilization and Final Report
- Section 6.0 Project Schedule

1.1 SITE BACKGROUND

The F-11 pistol and shotgun range was commissioned in 1955 and has 32 firing points separated by a sand filled wooden wall. The I-1 pistol range was commissioned in the 1950's and has 16 firing points. The B-12 pistol range was commissioned in the 1960's and has 6 firing points. These ranges are currently in use for small-arms target practice. Lead reclamation has not occurred at any of the ranges.

1.2 SITE DESCRIPTION

Camp Lejeune is a training base for the U.S. Marine Corps, located in Onslow County, North Carolina. The base covers approximately 234 square miles and includes 14 miles of coastline. The Atlantic Ocean, to the northeast bound MCB Camp Lejeune to the southeast by State Route 24, and to the west by U.S. Route 17. The town of Jacksonville, North Carolina is located north of the Base.

Ranges I-1, B-12, and F-11 are currently configured as shown in Figures 1, 5, and 8. Range I-1 is located in the Courthouse Bay area within the confines of the demolition facility. Range B-12 is located at MCAS New River off Curtis Road. Range F-11 is located in the Hadnot Point Industrial Area off Piney Green Road. Figure A, Vicinity Map, shows the locations of the three ranges. The ranges are

essentially flat with earthen berms located parallel to the target lines to prevent bullets from leaving the range area.

1.3 MAINTENANCE ACTIVITY OBJECTIVES FOR SOIL

Munitions on an active range are not considered "discarded material" (thus not solid waste) for RCRA purposes until the range is closed or transferred as specified in the Military Munitions Rule (MMR), 40 CFR 266, subpart M of 12 February, 1997, and as interpreted in the DoD Interim Policy developed to prepare the services of MMR implementation. The objective of this maintenance activity for soil at Ranges I-1, B-12, and F-11 at Camp Lejeune is to recover bullet metals and reduce the mobility of lead present in the surface soils of the existing berms. This is being accomplished as part of the range management program to minimize the potential for environmental releases at the small arm ranges. Recovered bullet metals will be shipped to an off-site recycling facility. The soil will be physically screened, chemically stabilized on-site and used as backfill material during construction of the upgraded range berms. In addition, a new bullet trap with a dust collector will be installed at each of the ranges to capture bullets and prevent further lead contamination of the berm soil. Sidewalls and a baffle will also be provided for prevention of overshot.

1.4 REFERENCES

The following reference documents were utilized as the basis for preparing the elements of this work plan:

- Battelle and HEPACO, Inc., Contract DAAL03-91-C-0034, Scientific Services Program Task Number 96-198, Delivery Order 1960, Draft Implementation Report for Maintenance of a Small-Arms Range Berm at MCB Camp Lejeune, N.C., July 1, 1997.
- OHM Remediation Services Corp., Contract N62470-97-D-5000, Delivery Order 0017, Proposal for Range Remediation, Ranges I-1, B-12, and F-11, MCB Camp Lejeune, N.C., September 4, 1998 and revisions September 14,1998.
- LANTDIV, Statement of Work Design Package with Specification, Remediation of Ranges I-1, B-12, and F-11, MCB Camp Lejeune, N.C., August 12, 1998
- OHM Remediation Services Corp. WorkPlan for maintenance at ranges D-29 and A-1, May 1998.
- Planned Action New Ranges, Email dated August 10, 1998.

2.0 *PRE-CONSTRUCTION ACTIVITIES*

2.1 PRECONSTRUCTION SUBMITTALS

The following plans have been developed for delivery order 0017 and are to be considered as complementary components to this work plan:

- Site-Specific Health and Safety Plan (SHSP) (included herein as Appendix A)
- Construction Quality Control Plan (CQCP) (included herein as Appendix B)
- Sampling and Analysis Plan (SAP) (included herein as Appendix C)
- Environmental Protection Plan (EPP) (included herein as Appendix D)
- Transportation and Disposal (T&D) Plan (included herein as Appendix E)

Additional reports, certifications, etc. will be submitted in accordance with the submittal register. The submittal register is included in the Construction Quality Control Plan.

2.2 PERMITS

OHM will prepare all permit applications for submission by the Base as required for construction of this remediation system. Permits required for this project include the following:

Utility clearances
Base construction/digging permits
Electrical Permits

2.3 PROCUREMENT

Upon approval of this Work Plan, OHM will initiate procurement of new equipment, materials, and subcontractors necessary for the execution of this project. The major equipment and materials to be procured include:

- Bullet Traps with roofs and dust collectors
- Timber for Side Walls and Baffles
- Concrete for Bullet Trap Foundations and Sidewalks

Specialty subcontractors may be procured to execute certain portions of work. The following is a list of anticipated subcontractors to be procured:

- Installation of Bullet Traps with roofs and dust collectors
- Electrical contractor for power distribution to the bullet traps
- Laboratory services for analyses
- Transportation and disposal services for residuals management

2.4 PRECONSTRUCTION MEETING

OHM will participate in a pre-construction meeting at MCB Camp Lejeune with Base, LANTDIV, and other parties prior to mobilization to the site. OHM representatives will include at a minimum the Project Manager and Site Supervisor. The purpose of this meeting will be to:

- Confirm roles and responsibilities of key personnel and flow of communication for project execution
- Review the project schedule, work hours, sequence of tasks, and key milestones
- Identify and discuss Base-specific issues relative to the upcoming mobilization and construction activities
- Obtain the necessary security clearances for operations personnel

3.0 SYSTEM CONSTRUCTION TASKS AND METHODS

3.1 MOBILIZATION

OHM will mobilize personnel and equipment as necessary from its nearby offices, including Covington, Georgia; Clermont, Florida; and Knoxville, Tennessee. Prior to beginning work on site, a training meeting will be conducted to brief all site personnel on the Site-Specific Health and Safety Plan, construction drawings, and other relevant site-specific plans. Site hazards and conditions will be discussed and all personnel will acknowledge their understanding and compliance with the plan by signing an approved acceptance form.

3.2 SITE PREPARATION

Project mobilization and site setup will consist of the following main activities:

- Temporary Facilities Installation - OHM will utilize its office trailer already located at Lot 203 as an administrative area and command center. In addition a canopy/lab trailer may be set-up on-site at the Ranges. The lab trailer/canopy will serve as the control check point for contractor/ subcontractor personnel entering the site.
- Site Survey - OHM will survey the height of the existing berms and layout the limits of affected areas. The berm limits will be visibly marked using reinforcing bars and/or wood stakes. OHM will also mark the location of other features such as equipment lay down areas, retaining walls, concrete trenches, and new sidewalks.
- Excavation Limits – OHM will visibly mark the top and front face of the berms to be excavated for easy recognition using paint and/or wooden stakes. Visibly marking the excavation areas allows for better determination of the work/safety zones and clearly defines the work area for the equipment operator.
- Erosion and Sedimentation Control - OHM will establish controls to prevent erosion and sedimentation through the use of sediment fencing. In this manner, OHM will mitigate the possibility of run-off to other areas and minimize run-on into the active work area. Silt fencing will be placed at the base of down gradient sides of the berm face being modified. The Environmental Protection Plan included with this WorkPlan provides details on environmental controls.
- Decontamination Areas - Personnel and equipment decontamination areas will be provided within the Contamination Reduction Zones (CRZ) upon exiting the contaminated working areas. The Site-Specific Health and Safety Plan addresses these areas in detail.
- Site Security - All persons entering the site will be required to sign in and out daily. OHM reserves the right to deny access to any individual not showing proper identification.

- Health and Safety Zones - The site will be segregated into work areas on the basis of degree of hazard and PPE requirements. In general, the fenced area excluding the open excavations will comprise the contamination reduction zone (CRZ). Personnel working within the CRZ will be required to wear the appropriate PPE as outlined in the Site-Specific Health and Safety Plan. Excavation areas within the CRZ will be designated the exclusion zone and will be delineated by orange safety fencing. OHM health and safety personnel will provide site air monitoring and will adjust work zone boundaries as appropriate.
- Personnel Decontamination Facility - OHM will set up a personnel decontamination area at the site. The location will be near construction areas depending on the phase of remediation activities. It will be furnished with portable wash basins. All decontamination and cleaning water generated from the decontamination activities will be collected and stored prior to disposal.

3.3 UTILITY CLEARANCES

OHM will contract with No-Cuts or JPL to provide utility location services consisting of identification and marking of all known utilities potentially within the work zones. OHM will exercise caution while performing intrusive work and will implement its Standard Operating Procedures for excavation near utilities. Techniques for minimizing damage to existing utilities include the use of location devices, utility location services, and hand digging. OHM's Health and Safety Plan also addresses these concerns.

3.4 PRE-EXCAVATION FIELD SCREENING/SITE CHARACTERIZATION

A field sampling crew will collect samples at the Ranges in accordance with the Sampling and Analyses Plan and ship samples off-site for analyses to characterize the berm soil. Samples may also be sent to OHM's laboratory in Knoxville, TN for limited treatability testing to optimize chemical addition rates for soil stabilization. The goal target contaminant is lead. The overall goal of the treatability study is to reduce leachable lead to below 5 mg/l as determined by the Toxic Characteristic Leaching Procedure (TCLP) test. A more complete discussion of this activity is provided in the Sampling and Analysis Plan.

In the unlikely event that laboratory results indicate that stabilization of the lead-contaminated berm soil is not feasible, OHM will notify the Navy Technical Representative (NTR) and propose additional sampling and analyses or off-site disposal of the soil as appropriate.

3.5 CLEARING AND GRUBBING

Areas to be excavated including the top and side face of the berms adjacent to the range targets and firing area will be cleared and grubbed. The under growth, tree limbs, roots, concrete, material generated during demolition of existing drainage features, and other non-contaminated debris shall be stock piled for disposal at a non-hazardous solid waste landfill in accordance with the Transportation and Disposal (T&D) Plan. This material will be sampled as specified in the sampling and analysis plan. Timbers from the existing facilities will be placed in a roll-off container for disposal in accordance with the Transportation and Disposal Plan.

3.6 BERM SOIL EXCAVATION

The soil on the top and side face of the berm adjacent to the range will be excavated until no lead particles remain visible in the soil. The depth of excavation using a backhoe is anticipated to be between 2-feet and 4-feet based on previous experience at Ranges D-29 and A-1. A total of approximately 2,325 bank cubic yards (BCY) of soil are estimated to be excavated based on the following estimated excavation depths:

- 4-feet on the top face of the berm.
- 3-feet on the sloped face of the berm adjacent to the Target lines.
- 4-inches over the firing lanes horizontal area.

3.7 EXCAVATED MATERIAL HANDLING AND SCREENING

This section describes excavation; handling potentially contaminated soils, stockpiling, and soil screening of berm materials. Excavation will proceed with the removal of soil on the top and front surface of the berms. After the berm soil is excavated, a visual inspection will be performed on the surrounding soil for metal bullet fragments. If metal bullet fragments are visible, additional soil will be excavated. Excavation depths will be manually monitored with a tape measure or equivalent measuring device to determine excavation depth. The final depth of excavation at each berm face will be recorded in the field notebook to document the extent of soil removal.

The objective of the screening operation is to physically separate the metal bullet fragments from the remaining soil and debris such that the lead based materials can be recycled at an off-site facility. Two other streams will be generated in this process, an oversize fraction greater than 4-inch (which will consist of debris, rocks, etc), and an undersize fraction less than 1/4-inch. The oversize will be managed as non-hazardous solid waste debris. The undersize soil may contain leachable lead, which will undergo on-site stabilization prior to reuse at the site.

Potentially contaminated soil excavated by the backhoe from the berm area will be stockpiled on plastic sheeting. Stockpiled soil which may be lead contaminated shall be covered with plastic sheeting prior to leaving the site at the end of each day and when rain occurs to minimize the potential for contaminated storm water run-off at the site.

A front-end loader will deliver excavated soil to a grizzly with a live bottom feeder to separate large debris, rocks, and oversize material greater than 4-inch diameter. Oversize material will be stockpiled. Material less than 4-inch will be conveyed to a vibratory shaker screen, which will further size segregate the soil particles. The vibratory screen will be capable of making further cuts to separate the metal bullet fragments, which are expected to be greater than 3/16-inch (or roughly 5 mm). Screens will be selected based on the percent of material greater than ½ to 1-inch. Material greater than 1-inch will be diverted as debris to a separate stockpile. Material less than 1-inch and greater than 3/16-inch will be conveyed back to the head of the screening plant. Bullet fragments (less than > 3/16-inch) will be separated from the bulk of the soil and debris as a separate stream. Soil passing the 3/16-inch diameter screen will be stockpiled and chemically stabilized as necessary as discussed below.

3.8 SOIL STABILIZATION

The less than 3/16-inch screened soils shall be placed on plastic sheeting in the designated soil stabilization area in piles containing 100 cubic yards or less. Trisodium phosphate or an approved equivalent stabilization agent at a mix ratio determined by treatability testing will be added to each of these stock piles of soil to stabilize the lead. The stockpiled soil will be mixed with the trisodium phosphate material on the plastic sheeting using the backhoe. A five-point composite sample will be collected from each stabilized soil stockpile and sent off-site for analyses as indicated in the sampling and analyses plan. Once it is determined that lead the contaminated soils have been stabilized, the treated soils will be used as backfill on the berms that have had the bullet fragments removed. If the soil is not suitable for use as backfill for the berms, OHM will notify and consult with the NTR to evaluate available options. OHM will make recommendations for additional testing/stabilization and/or other disposal options based on laboratory results.

3.9 BERM RESTORATION

Once the bullet fragments have been removed from the excavated berm soil and this material stabilized, OHM will begin site restoration activities.

Berm restoration operations will be implemented as soon as possible after the excavated berm soil has been stabilized in order to reduce the potential for berm erosion. Stabilized berm soil will be returned to the berm. Suitable backfill material from an off-site location may be required. Fill will be spread evenly above surface to be filled in lifts not exceeding 12 inches and compacted in horizontal

layers as nearly even as possible using tracked equipment. Following berm site restoration, OHM will survey the berm for inclusion on the as-built drawings.

3.10 EXCESS NON-BERM SOIL EXCAVATION

Clean soil that is free from organic material which is excavated during removal of existing walk ways, installation of drainage trenches, installation of side walks, installation of retaining wall posts, and installation of the bullet trap foundation slab will be used on-site as fill during restoration activities. Stockpiling of this clean soil on-site is permissible providing appropriate erosion controls measure at taken as specified in the Environmental Protection Plan

3.11 CONCRETE FOUNDATION FOR BULLET TRAP

A 6-inch thick concrete foundation slab, sized as indicated on the drawings. will be installed to support the bullet traps as shown in Figures 3, 6, and 9. An 8 feet by 12 feet by 6-inch thick slab will also be provided for the dust collection equipment.

3.12 BULLET TRAP WITH DUST COLLECTOR, RANGE A-1

Bullet traps with dust collectors for will be supplied, installed, tested, and started-up by the manufacturer. The locations of the bullet traps and dust collectors are shown in Figures 3, 6, and 9. The bullet trap shall meet the following requirements:

- Consist of 16 trap lane modules 5-feet wide separated by a center 3 feet module and with 3-feet modules on each end to form a single aperture 89 feet wide for Range I-1 and both sides of Range F-11; for Range B-12, 10 lane modules 5 feet wide separated by a center 3 feet module and with 3 feet modules on each end to form a single aperture 59 feet wide. The traps will include a crip style steel roof covering the entire area occupied by the traps.
- The traps will employ a single stage air collection and filtration system to collect and purify the air within the main deflection aperture/collection chamber.
- The dust collectors will be weather proof, suitable for outdoor installations.
- The dust collectors and ductwork shall be protected from stray bullets.

Start-up of dust collector to verify airflow meets design requirements: ductwork system does not leak, and dust collector system functions as designed will be conducted.

3.11 WALL CONSTRUCTION

To prevent stray horizontal fire from exiting the sides of the range areas, new sand-filled timber walls will be constructed. All timber materials will be salt treated for exterior use. Member sizes will be as indicated on the drawings (Figure 11).

Each new wall will be 10'-2" in height by 3'-3" wide and contain a 24-inch cavity. The cavity will be lined with a geotextile material and filled with sand. The new walls will be capped with timber.

At Range F-11, the existing wall will be raised to a final height of 10 feet by extending the vertical support posts and installing additional wallboards. The completed extension will be sand-filled. Post extensions will be through bolted to existing posts and to their counter part on the other wall face. For details please refer to Figure 11.

3.14 BAFFLE CONSTRUCTION

Stray vertical fire will be inhibited by construction on baffles at all ranges. Baffles will provide a clear height of 9 feet 2 inches and be configured as indicated on Figures 3, 6, and 9. Details of the baffle construction are shown on Figure 12. The outermost baffle support column at its intersection with the new walls will also serve as a wall support column. All materials used in the construction of the baffles will be salt treated for resistance to the elements.

3.15 SIDEWALK CONSTRUCTION

Two feet wide sidewalks constructed of 4 inches thickness, 2500 PSI concrete will be installed in the locations indicated on Figures 3, 6, and 9. Areas under the baffles and between the sidewalks will receive gravel over geotextile at a nominal thickness of 2 inches.

3.16 SITE DRAINAGE AND REVEGETATION

The ranges will be graded to drain as shown in Figures 3, 6, and 9. OHM will hydroseed the entire disturbed berm area and provide erosion control netting on berm slopes, if necessary.

4.0 ELECTRICAL POWER DISTRIBUTION

OHM will provide primary electrical power to the dust collector at each of Ranges I-1, B-12, and F-11 by tapping into the Base's existing 12.47 kV power lines. OHM's electrical subcontractor will install new power poles and transformers and a 100-amp service entrance rated panel boards. New overhead or underground power lines and associated power poles will be installed between the existing power source and the new power pole with the transformer as shown on Figures 13, 14, and 15.

The main distribution panel boards will be enclosed in NEMA 3R enclosures and will be mounted on the new service poles. Prior to start-up, all electrical equipment will be tested to ensure proper operation. All electrical work shall be in accordance with NFPA 70. An electrical one-line diagram for each range is provided in Figures 13, 14 and 15.

5.0 DEMOBILIZATION AND FINAL REPORT

All equipment, support trailers and personnel will be demobilized from the project site. A Contractor's Closeout Report will be completed and submitted for review and comment. The Contractor's Closeout Report will include the following:

- Summary of maintenance activities
- Quality Control Daily Reports
- On-site sample test results
- Laboratory analyses
- Quality assurance sample results
- Contaminated material disposal and recycling documentation including manifests
- "As-built" drawings showing the elevation of the range berms
- Corrective actions taken (if required)
- Bullet trap and dust collector operation and maintenance manual

6.0 SCHEDULE

The project schedule depicts the major tasks and durations to perform the maintenance activities at Ranges I-1, B-12, and F-11.

MARINE CORPS BASE, CAMP LEJEUNE
NORTH CAROLINA

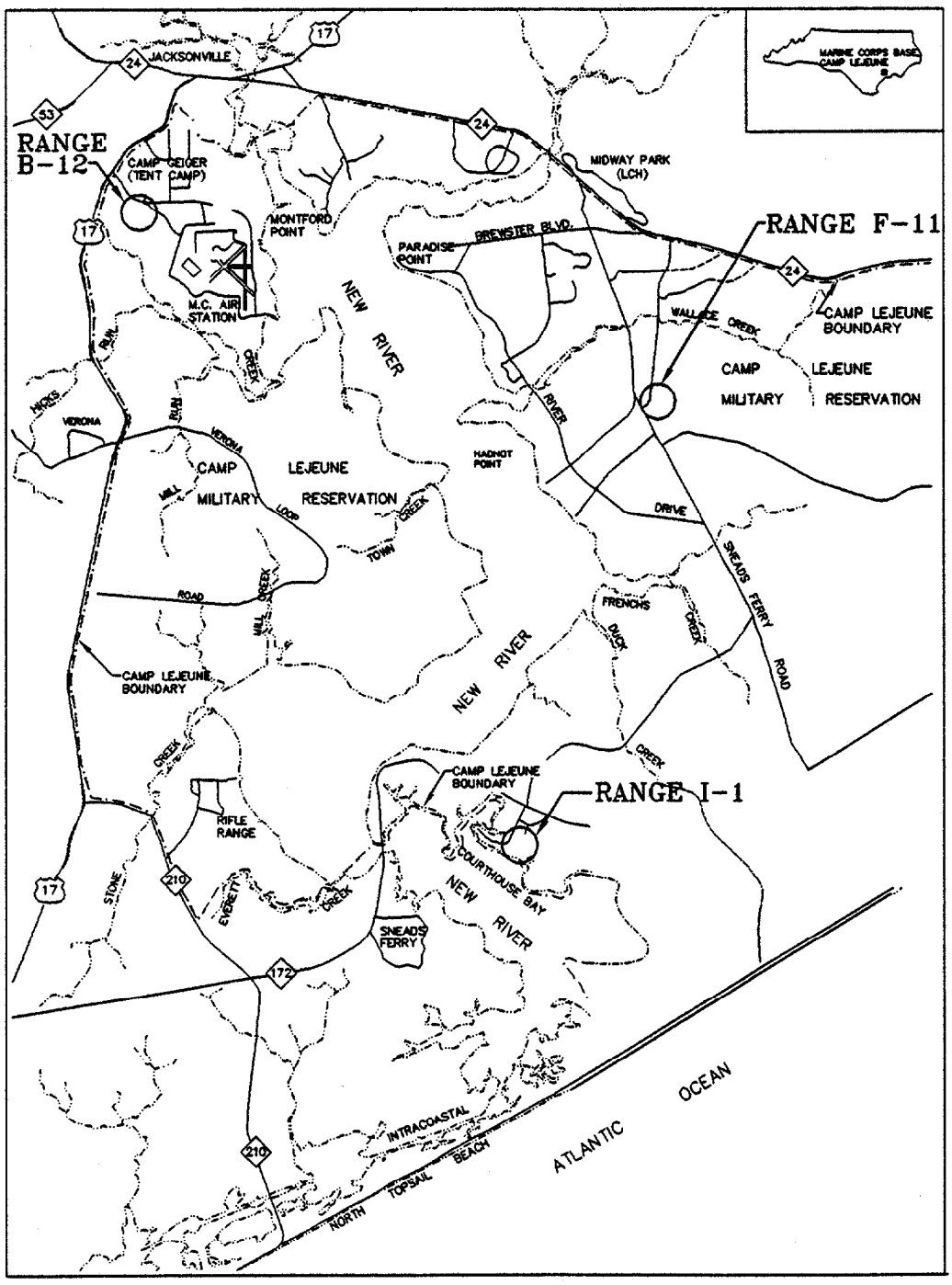

VICINITY MAP

MILES 0 1.5 3 4.5 6 7.5

OHM Remediation Services Corp. NORCROSS, GEORGIA A SUBSIDIARY OF OHM CORPORATION			
DRAWN BY	J. LANGE	10/23/98	
CHECKED BY	J. DUNN	10/23/98	
APPROVED BY	J. DUNN	10/23/98	
REV. 0	SHEET # –	PROJECT NO.	920901

FIGURE A

VICINITY MAP
RANGES I-1, B-12 AND F-11

REMEDIATION OF LEAD CONTAMINATED SOIL

G:\LANTDIV\LEJF\920901\WP\FIG-A.DWG

02339001Z

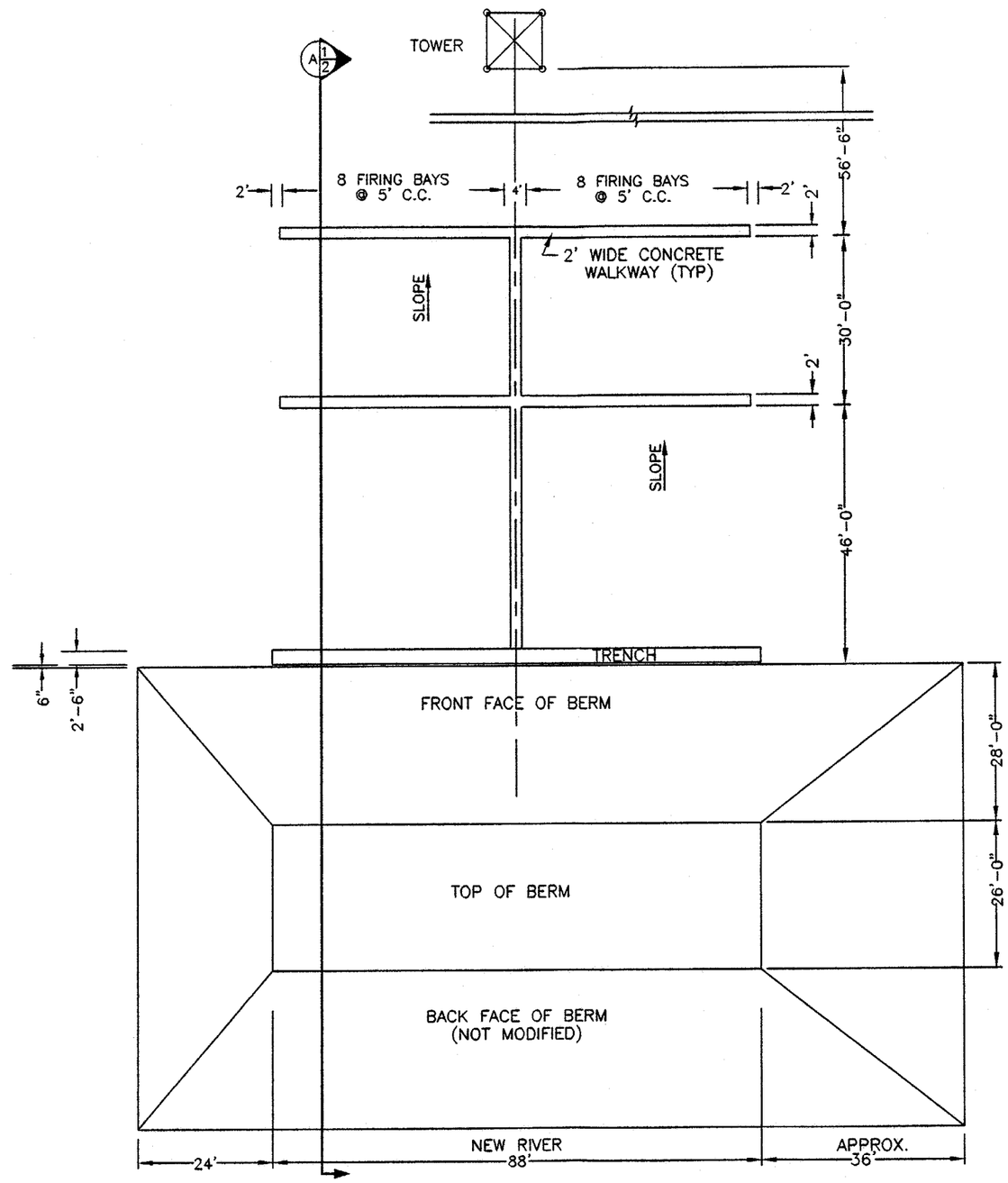

OHM Remediation Services Corp.
Norcross, Georgia
A Subsidiary of OHM Corporation

SUBMITTED: _____ PROJECT MANAGER DATE: _____
APPROVED: _____ SR. PROJECT ENGINEER DATE: _____
APPROVED: _____ DEPT. MANAGER DATE: _____

CADD FILE: _____
DRAWN: J. LANGE
DESIGNED: J. DUNN
CHECKED: J. DUNN
CHECKED: _____

REVISIONS

REV.	DESCRIPTION	BY	DATE	APP.
1	ISSUED WITH WORK PLAN	–	10/23/98	–

DEPARTMENT OF THE NAVY — NAVAL FACILITIES ENGINEERING COMMAND
ATLANTIC DIVISION
NAVAL STATION — NORFOLK, VIRGINA
CONTRACT NO. N62470-97-D-5000 — DELIVERY ORDER 0017
OHM PROJECT NO. 920901 — MARINE CORPS BASE, CAMP LEJEUNE, N.C.

FIGURE 1
RANGE I-1
EXISTING PLAN VIEW

DRAWING NUMBER:
SHEET NUMBER:
DATE: 8/18/98

J:\LANTDIV\LEJEUNE\920_____\WP\FIG-1.DWG

023390022

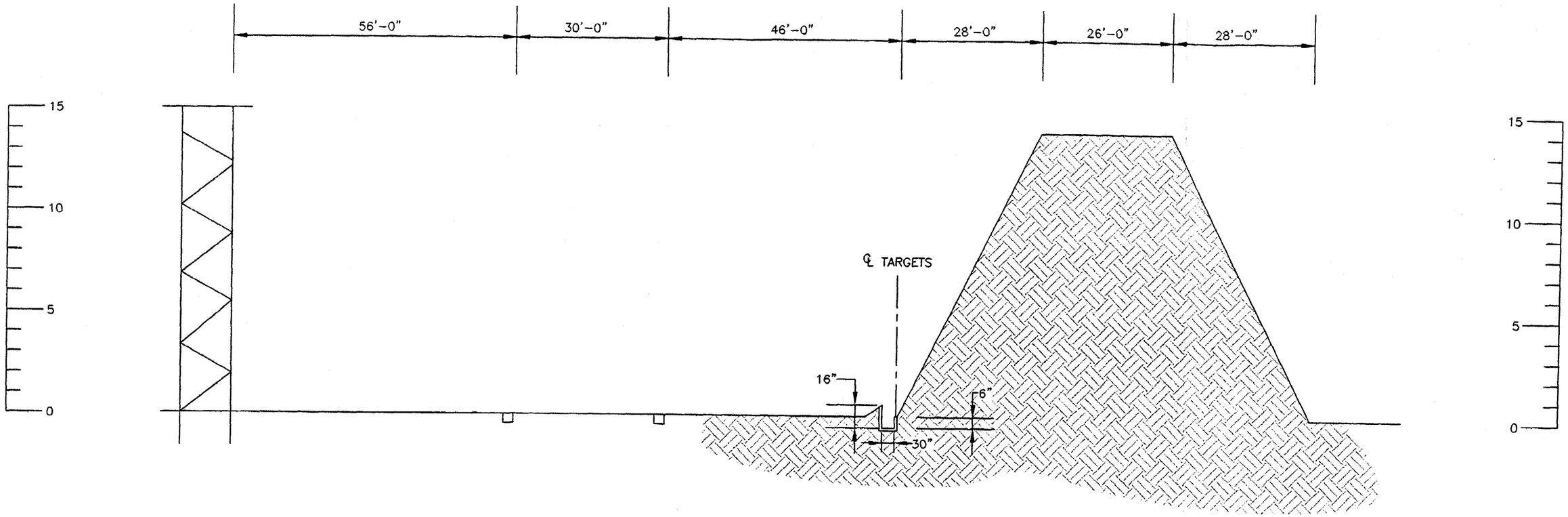

EXISTING SECTION A-1

GRAPHIC SCALE
10 0 20

OHM Remediation Services Corp.
Norcross, Georgia
A Subsidiary of OHM Corporation

SUBMITTED: _____ PROJECT MANAGER DATE: _____
APPROVED: _____ SR. PROJECT ENGINEER DATE: _____
APPROVED: _____ DEPT. MANAGER DATE: _____

CADD FILE: _____
DRAWN: J. LANGE
DESIGNED: J. DUNN
CHECKED: J. DUNN
CHECKED: _____

REVISIONS

REV.	DESCRIPTION	BY	DATE	APP.
1	ISSUED WITH WORK PLAN	-	10/23/98	-

DEPARTMENT OF THE NAVY NAVAL FACILITIES ENGINEERING COMMAND
ATLANTIC DIVISION
NAVAL STATION NORFOLK, VIRGINA
CONTRACT NO. N62470-97-D-5000 DELIVERY ORDER 0017
OHM PROJECT NO. 920901 MARINE CORPS BASE, CAMP LEJEUNE, N.C.

FIGURE 2
RANGE I-1
EXISTING SECTON

DRAWING NUMBER:
SHEET NUMBER:
DATE:

J:\LANTDIV\LEJEUNE\920901\WP\FIG-2.DWG

023390032

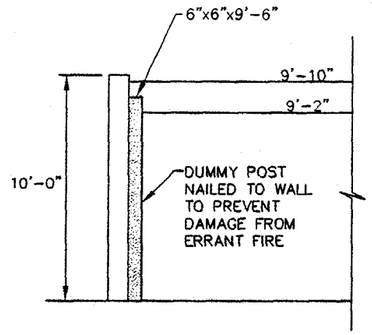

DETAIL "1"

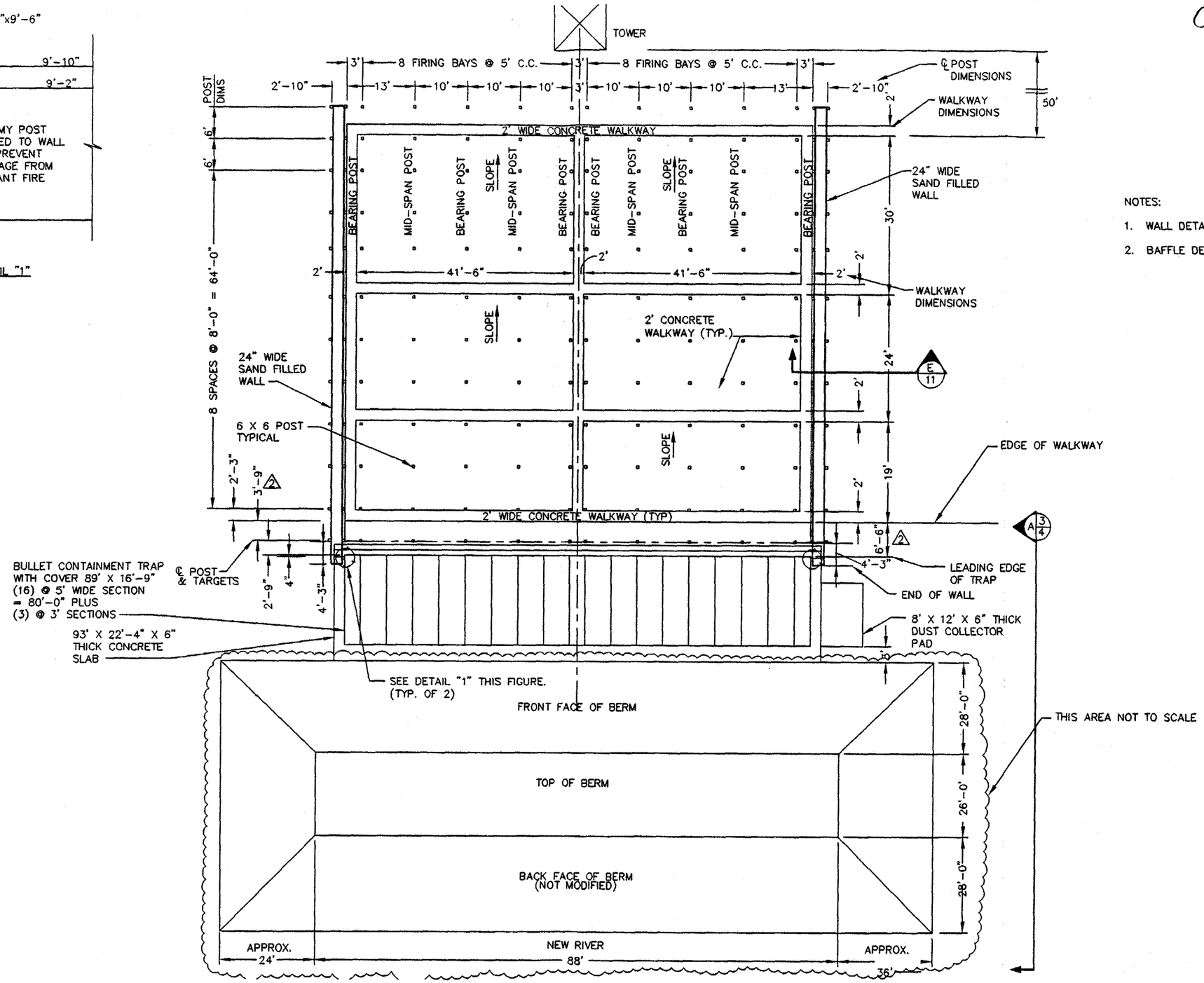

NOTES:

1. WALL DETAILS SEE FIGURE 11.
2. BAFFLE DETAILS SEE FIGURE 12.

OHM Remediation Services Corp.
Norcross, Georgia
A Subsidiary of OHM Corporation

SUBMITTED: _____ PROJECT MANAGER DATE: _____
APPROVED: _____ SR. PROJECT ENGINEER DATE: _____
APPROVED: _____ DEPT. MANAGER DATE: _____

CADD FILE: _____
DRAWN: J. LANGE
DESIGNED: J. DUNN
CHECKED: J. DUNN
CHECKED: –

REVISIONS

REV.	DESCRIPTION	BY	DATE	APP.
1	REVISED FOR WALL EXTENSION	–	9/15/98	JAD
2	ISSUED WITH WORK PLAN	–	10/23/98	–

DEPARTMENT OF THE NAVY — NAVAL FACILITIES ENGINEERING COMMAND
ATLANTIC DIVISION
NAVAL STATION — NORFOLK, VIRGINA
CONTRACT NO. N62470-97-D-5000 — DELIVERY ORDER 0017
OHM PROJECT NO. 920901 — MARINE CORPS BASE, CAMP LEJEUNE, N.C.

FIGURE 3
RANGE I-1
PROPOSED PLAN VIEW

DRAWING NUMBER:
SHEET NUMBER:
DATE: 8/18/98

J:\LANTDIV\LEJEUNE\1\WP\FIG-3.DWG

023390042

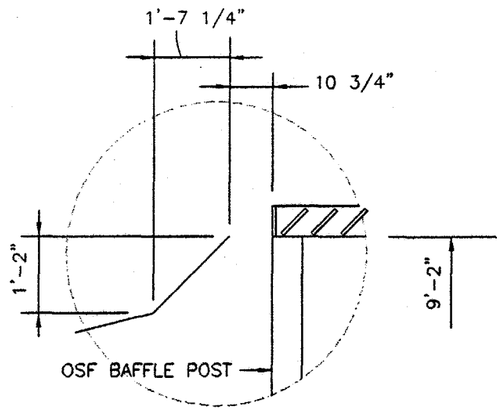

DETAIL 1
NOT TO SCALE

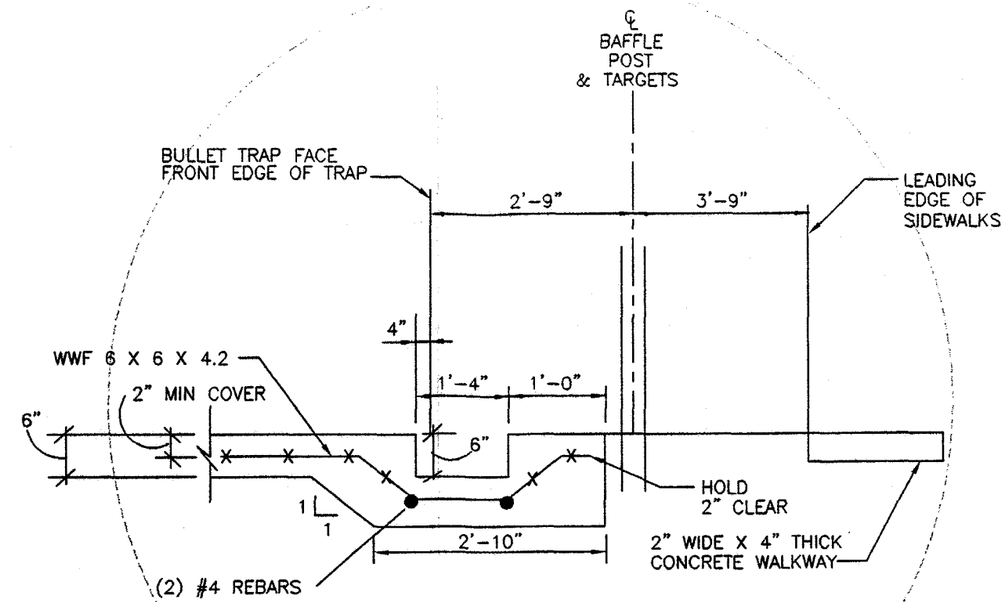

CONCRETE TRENCH DETAIL
NOT TO SCALE

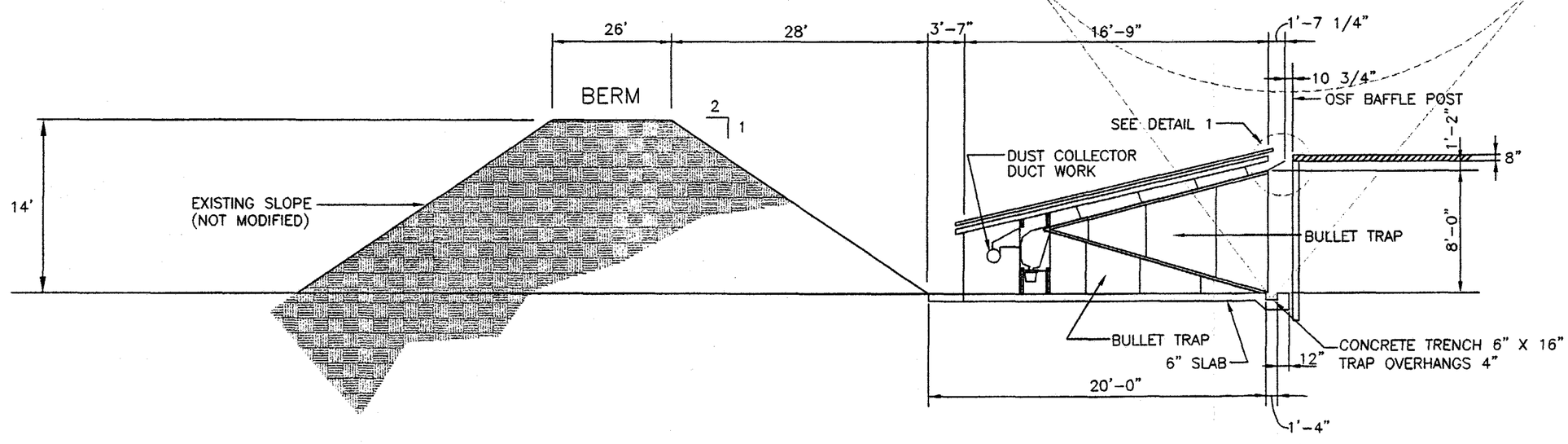

SECTION A 3|4
N.T.S.

OHM Remediation Services Corp. Norcross, Georgia A Subsidiary of OHM Corporation		REVISIONS				
	CADD FILE:	REV.	DESCRIPTION	BY	DATE	APP.
	DRAWN: J. LANGE	1	ISSUED WITH WORK PLAN	–	10/23/98	–
SUBMITTED: PROJECT MANAGER DATE:	DESIGNED: J. DUNN					
APPROVED: SR. PROJECT ENGINEER DATE:	CHECKED: J. DUNN					
APPROVED: DEPT. MANAGER DATE:	CHECKED: –					

DEPARTMENT OF THE NAVY — NAVAL FACILITIES ENGINEERING COMMAND
ATLANTIC DIVISION
NAVAL STATION — NORFOLK, VIRGINA
CONTRACT NO. N62470-97-D-5000 — DELIVERY ORDER 0017
OHM PROJECT NO. 920901 — MARINE CORPS BASE, CAMP LEJEUNE, N.C.

FIGURE 4
RANGE I-1
PROPOSED BERM AND BULLET TRAP SECTION

DRAWING NUMBER:
SHEET NUMBER:
DATE: 8/18/98

J:\LANTDIV\LEJEUNE\920901\WP\FIG-4.DWG

023390052

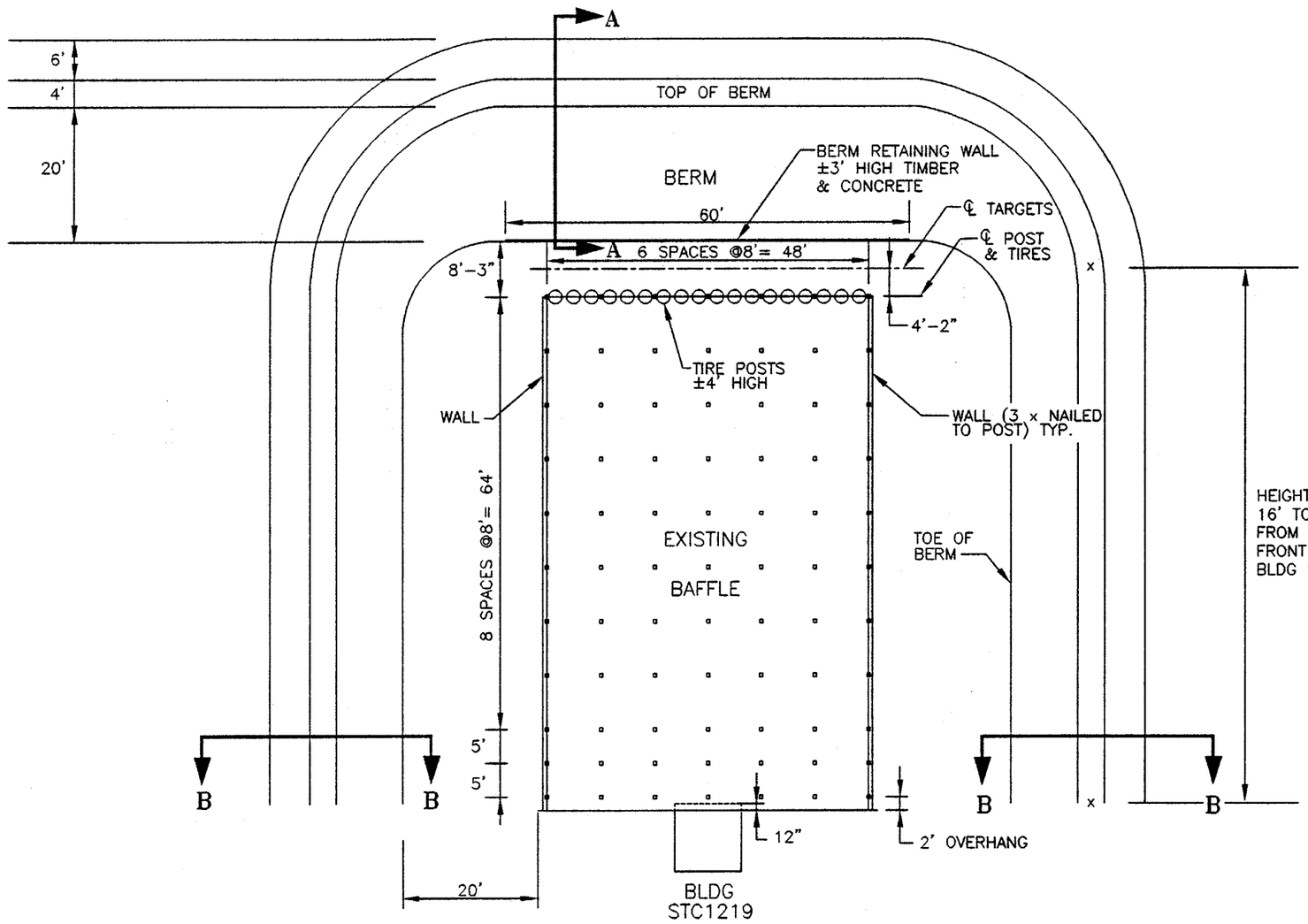

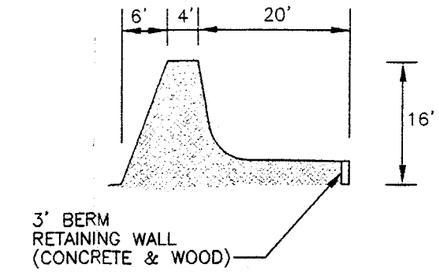

BERM SECTION A-A

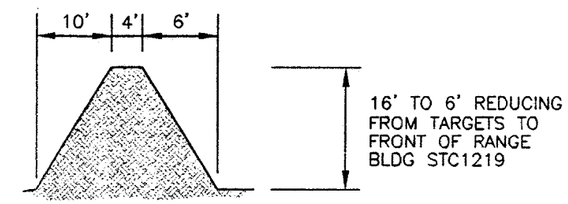

BERM SECTION B-B

NOTES:

1. BLDG STC1219 WILL BE REMOVED
2. TIMBER IN EXISTING BAFFLE WILL BE REUSED IF POSSIBLE.
3. TIRES AND POST WILL BE ROUTED TO DISPOSAL.

GRAPHIC SCALE

20 0 20

SCALE: 1"=20'

J:\LANTDIV\LEJEUNE\920901\WP\FIG-5.DWG

OHM Remediation Services Corp.
Norcross, Georgia
A Subsidiary of OHM Corporation

SUBMITTED: _____ DATE: _____ PROJECT MANAGER
APPROVED: _____ DATE: _____ SR. PROJECT ENGINEER
APPROVED: _____ DATE: _____ DEPT. MANAGER

CADD FILE:
DRAWN: J. LANGE
DESIGNED: J. DUNN
CHECKED: J. DUNN
CHECKED:

REVISIONS

REV.	DESCRIPTION	BY	DATE	APP.
1	ISSUED WITH WORK PLAN	–	10/23/98	–

DEPARTMENT OF THE NAVY — NAVAL FACILITIES ENGINEERING COMMAND

ATLANTIC DIVISION

NAVAL STATION — NORFOLK, VIRGINA

CONTRACT NO. N62470-97-D-5000 — DELIVERY ORDER 0017

OHM PROJECT NO. 920901 — MARINE CORPS BASE, CAMP LEJEUNE, N.C.

FIGURE 5

RANGE B-12
EXISTING PLAN VIEW

DRAWING NUMBER:

SHEET NUMBER:

DATE: 8/18/98

023390062

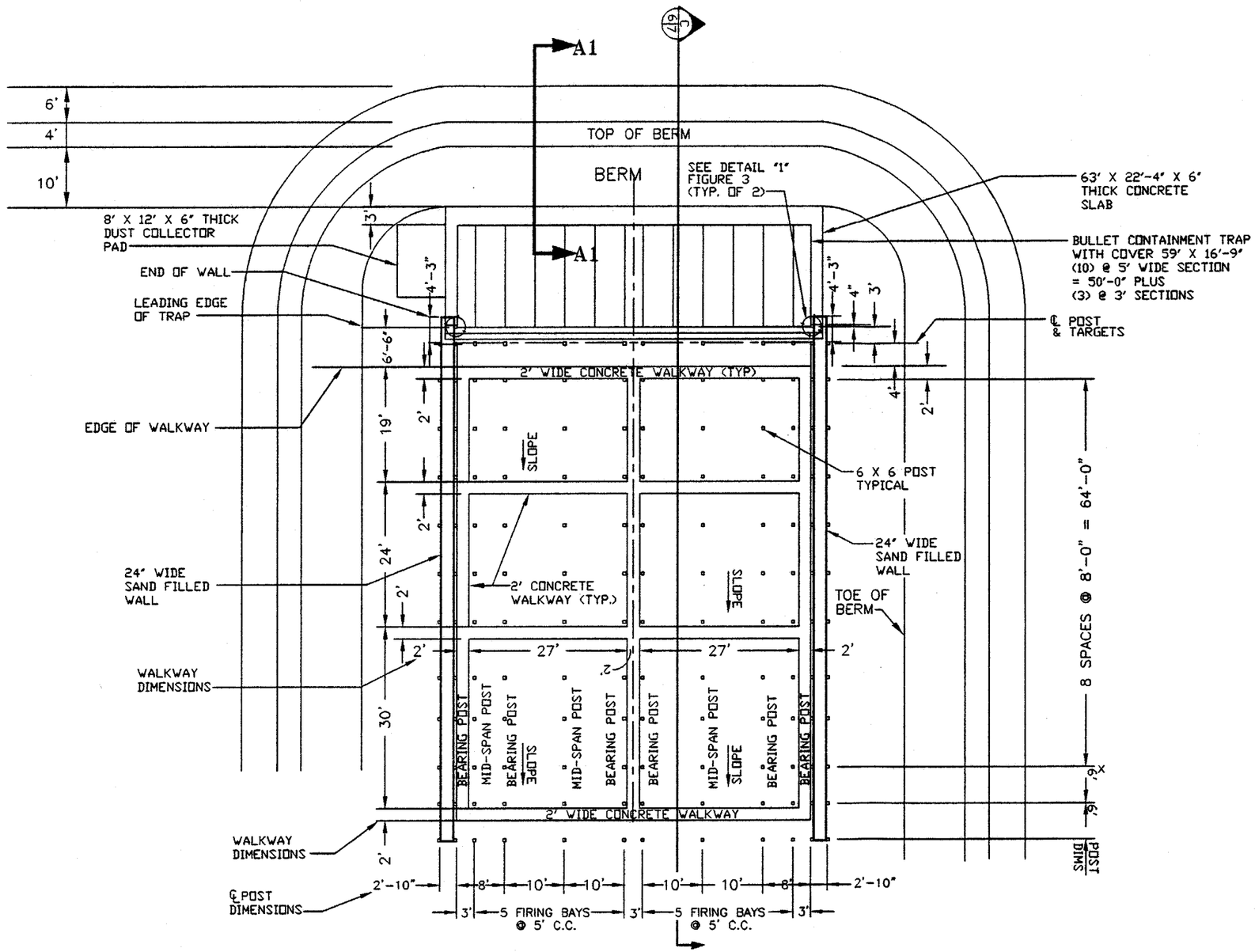

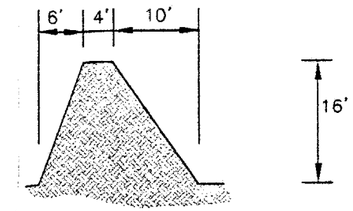

NEW BERM SECTION A1-A1

NOTES:

1. WALL DETAILS SEE FIGURE 11.
2. BAFFLE DETAILS SEE FIGURE 12.

OHM Remediation Services Corp.
Norcross, Georgia
A Subsidiary of OHM Corporation

SUBMITTED: _____ PROJECT MANAGER: DATE: _____
APPROVED: _____ SR. PROJECT ENGINEER DATE: _____
APPROVED: _____ DEPT. MANAGER DATE: _____

CADD FILE: _____
DRAWN: J. LANGE
DESIGNED: J. DUNN
CHECKED: J. DUNN
CHECKED: _____

REVISIONS

REV.	DESCRIPTION	BY	DATE	APP.
1	REVISED FOR WALL EXTENSION	–	9/15/98	JAD
2	ISSUED WITH WORK PLAN	–	10/23/98	–

DEPARTMENT OF THE NAVY — NAVAL FACILITIES ENGINEERING COMMAND

ATLANTIC DIVISION

NAVAL STATION — NORFOLK, VIRGINIA

CONTRACT NO. N62470-97-D-5000 — DELIVERY ORDER 0017

OHM PROJECT NO. 920901 — MARINE CORPS BASE, CAMP LEJEUNE, N.C.

FIGURE 6

RANGE B-12
PROPOSED PLAN VIEW

DRAWING NUMBER:
SHEET NUMBER:
DATE: 8/18/98

J:\LANTDIV\LEJEUNE\920901\WP\FIG-6.DWG

02339007Z

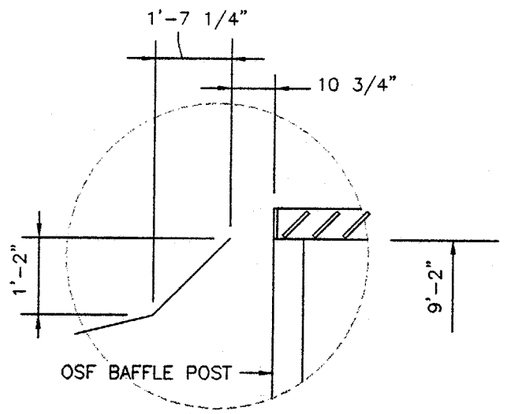

DETAIL 1
NOT TO SCALE

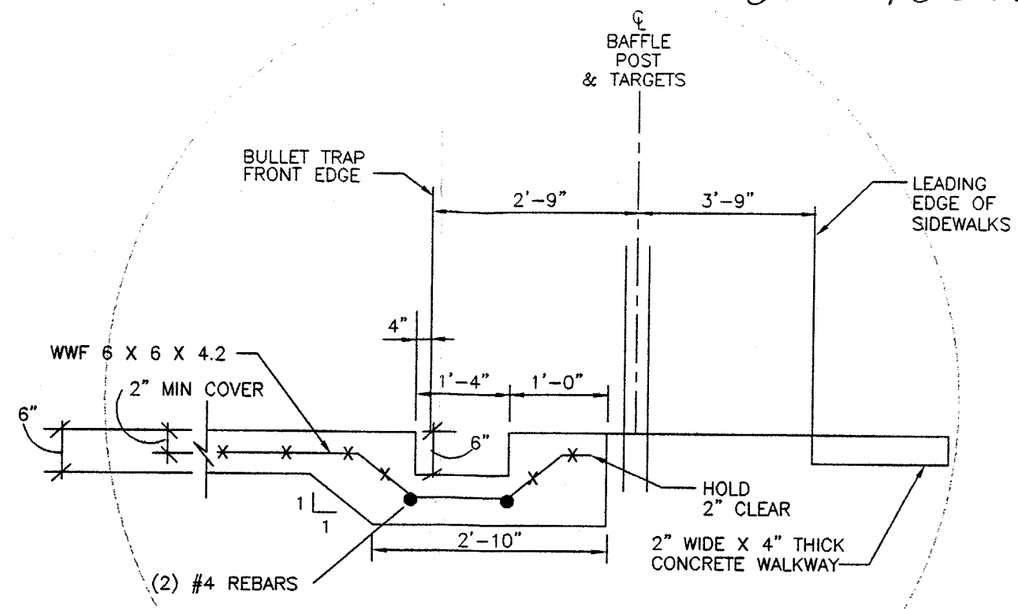

CONCRETE TRENCH DETAIL
NOT TO SCALE

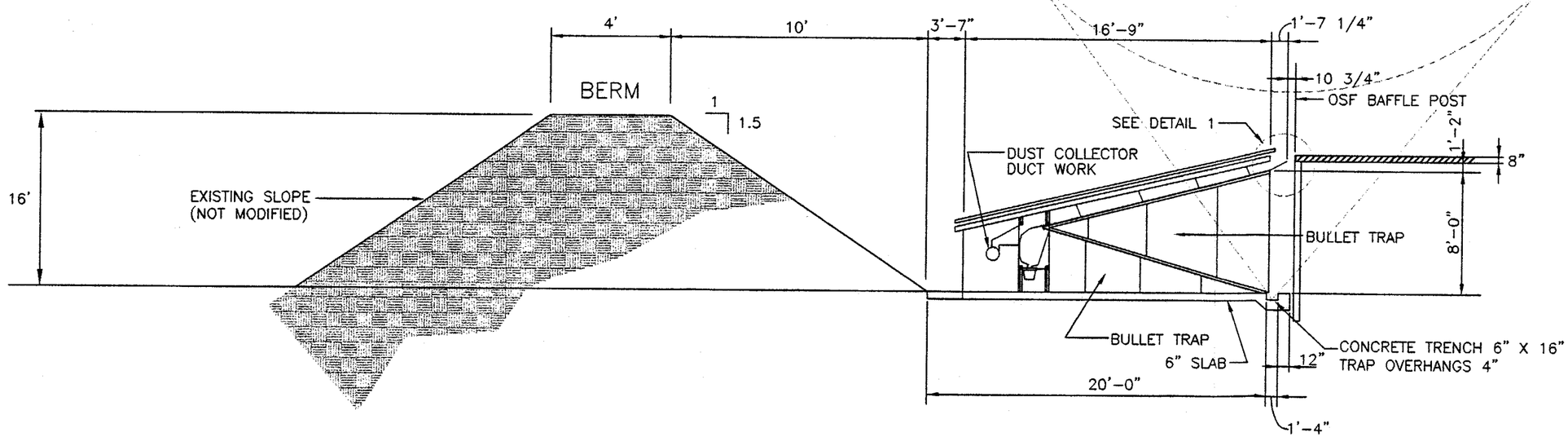

SECTION C 6|7
N.T.S.

G:\LANTDIV\LEJEUNE\920901\WP\FIG-7.DWG

OHM Remediation Services Corp.
Norcross, Georgia
A Subsidiary of OHM Corporation

SUBMITTED: _____ PROJECT MANAGER DATE: _____
APPROVED: _____ SR. PROJECT ENGINEER DATE: _____
APPROVED: _____ DEPT. MANAGER DATE: _____

CADD FILE: _____
DRAWN: J. LANGE
DESIGNED: J. DUNN
CHECKED: J. DUNN
CHECKED: –

REVISIONS

REV.	DESCRIPTION	BY	DATE	APP.
1	ISSUED WITH WORK PLAN	–	10/23/98	–

DEPARTMENT OF THE NAVY — NAVAL FACILITIES ENGINEERING COMMAND
ATLANTIC DIVISION
NAVAL STATION — NORFOLK, VIRGINA
CONTRACT NO. N62470-97-D-5000 — DELIVERY ORDER 0017
OHM PROJECT NO. 920901 — MARINE CORPS BASE, CAMP LEJEUNE, N.C.

FIGURE 7
RANGE B-12
PROPOSED BERM & BULLET TRAP SECTION

DRAWING NUMBER:
SHEET NUMBER:
DATE: 9/18/98

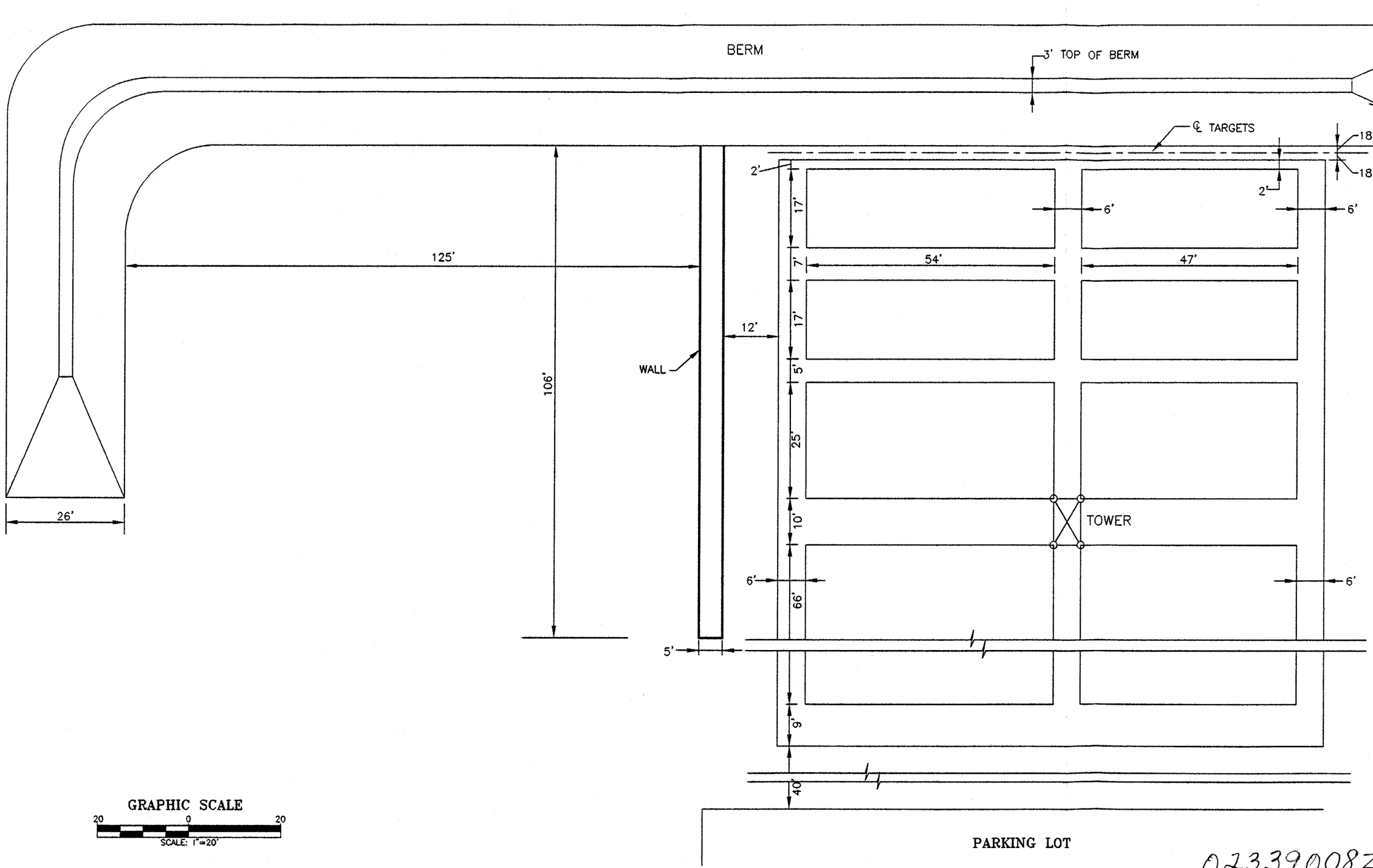

02339008Z

OHM Remediation Services Corp. Norcross, Georgia A Subsidiary of OHM Corporation		REVISIONS				
SUBMITTED: _____ PROJECT MANAGER DATE:	CADD FILE:	REV.	DESCRIPTION	BY	DATE	APP.
APPROVED: _____ SR. PROJECT ENGINEER DATE:	DRAWN: J. LANGE	1	ISSUED WITH WORK PLAN	–	10/23/98	–
APPROVED: _____ DEPT. MANAGER DATE:	DESIGNED: J. DUNN					
	CHECKED: J. DUNN					
	CHECKED:					

DEPARTMENT OF THE NAVY — NAVAL FACILITIES ENGINEERING COMMAND

ATLANTIC DIVISION

NAVAL STATION — NORFOLK, VIRGINA

CONTRACT NO. N62470-97-D-5000 — DELIVERY ORDER 0017

OHM PROJECT NO. 920901 — MARINE CORPS BASE, CAMP LEJEUNE, N.C.

FIGURE 8

RANGE F-11
EXISTING PLAN VIEW

DRAWING NUMBER:

SHEET NUMBER:

DATE: 8/18/98

J:\LANTDIV\LEJEUNE\920901\WP\FIG-8.DWG

023390092

BERM

3' TOP OF BERM

8' X 12' X 6' THICK DUST COLLECTOR PAD

91'-6" X 22'-4" X 6' THICK CONCRETE SLAB (TYP)

WALL (EXIST.)

5'

SEE DETAIL '1' FIGURE 3 (TYP. OF 4)

BULLET CONTAINMENT TRAP WITH COVER 89' X 16'-9' (16) @ 5' WIDE SECTION = 80'-0" PLUS (3) @ 3' SECTIONS (TYP)

8' X 12' X 6' THICK DUST COLLECTOR PAD

℄ POST TARGETS

LEADING EDGE OF TRAP

EDGE OF WALKWAY

26'

WALKWAY DIMENSIONS

24' WIDE SAND FILLED WALL

WALKWAY DIMENSIONS

℄ POST DIMENSIONS

3'

4'-3"

6'-6"

19'

24'

30'

2'

2' WIDE CONCRETE WALKWAY (TYP)

SLOPE

2' CONCRETE WALKWAY (TYP.)

41'-6"

BEARING POST

MID-SPAN POST

2' WIDE CONCRETE WALKWAY

6 X 6 POST TYPICAL

24' WIDE SAND FILLED WALL

8 SPACES @ 8'-0" = 64'-0"

POST DIMS

6'

4"

4'

2'-10"

13'

10'

8 FIRING BAYS @ 5' C.C.

40'

EXISTING PARKING LOT

NOTES:

1. EXISTING WALL WILL BE USED TO MEET NEW BAFFLES-SEE FIGURE 11.
2. NEW WALL DETAILS SEE FIGURE 11.
3. BAFFLE DETAILS SEE FIGURE 12.

GRAPHIC SCALE

20 0 20

SCALE: 1"=20'

J:\LANTDIV\LEJEUNE\9901\WP\FIG-9.DWG

OHM Remediation Services Corp.
Norcross, Georgia
A Subsidiary of OHM Corporation

SUBMITTED: _____ PROJECT MANAGER DATE: _____
APPROVED: _____ SR. PROJECT ENGINEER DATE: _____
APPROVED: _____ DEPT. MANAGER DATE: _____

CADD FILE: _____
DRAWN: J. LANGE
DESIGNED: J. DUNN
CHECKED: J. DUNN
CHECKED: _____

REVISIONS

REV.	DESCRIPTION	BY	DATE	APP.
1	REVISED FOR WALL EXTENSION	–	9/15/98	JAD
2	ISSUED WITH WORK PLAN	–	10/23/98	–

DEPARTMENT OF THE NAVY — NAVAL FACILITIES ENGINEERING COMMAND

ATLANTIC DIVISION

NAVAL STATION — NORFOLK, VIRGINA

CONTRACT NO. N62470-97-D-5000 — DILVERY ORDER 0017

OHM PROJECT NO. 920901 — MARINE CORPS BASE, CAMP LEJEUNE, N.C.

FIGURE 9

RANGE F-11
PROPOSED PLAN VIEW

DRAWING NUMBER:

SHEET NUMBER:

DATE: 8/18/98

02339010Z

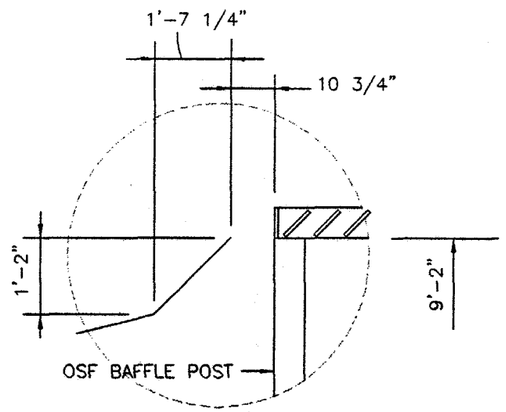

DETAIL 1
NOT TO SCALE

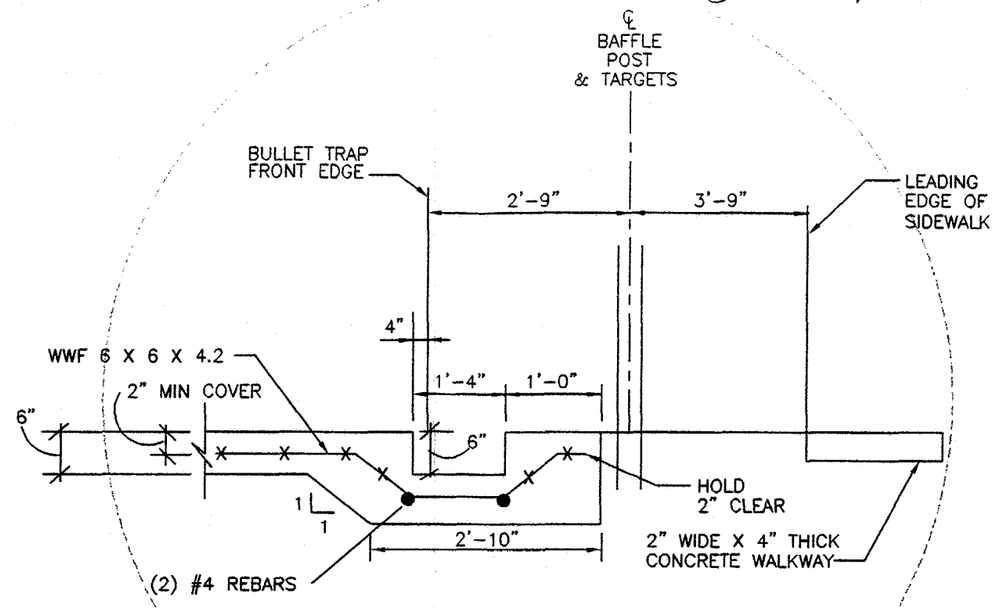

CONCRETE TRENCH DETAIL
NOT TO SCALE

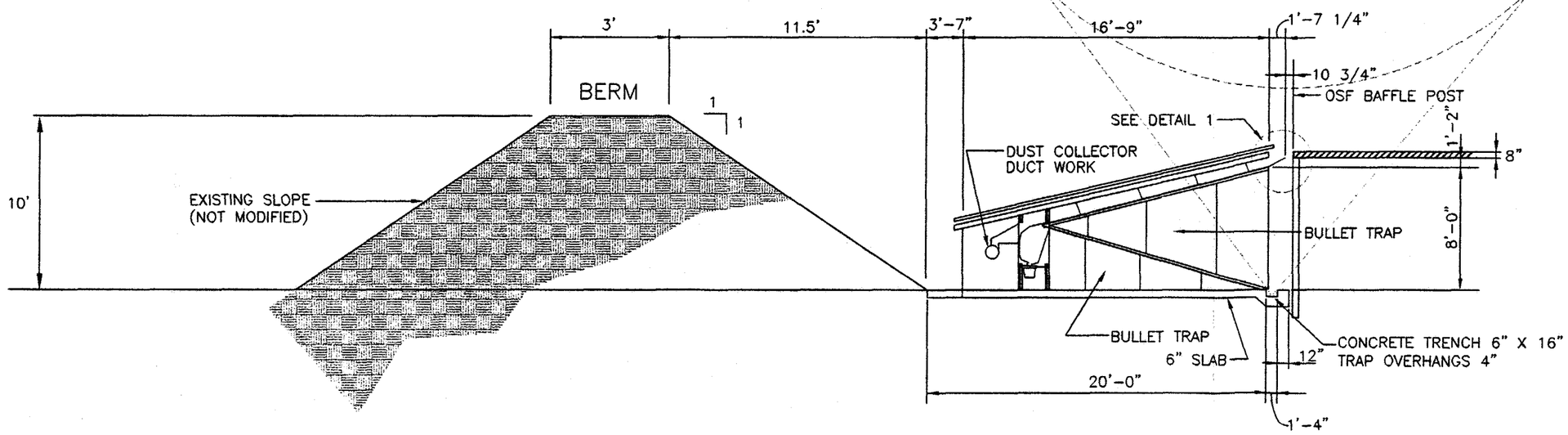

SECTION D 9/10
N.T.S.

OHM Remediation Services Corp. Norcross, Georgia A Subsidiary of OHM Corporation		REVISIONS				
	CADD FILE:	REV.	DESCRIPTION	BY	DATE	APP.
	DRAWN: J. LANGE	1	ISSUED WITH WORK PLAN	–	10/23/98	–
SUBMITTED: PROJECT MANAGER DATE:	DESIGNED: J. DUNN					
APPROVED: SR. PROJECT ENGINEER DATE:	CHECKED: J. DUNN					
APPROVED: DEPT. MANAGER DATE:	CHECKED: –					

DEPARTMENT OF THE NAVY — NAVAL FACILITIES ENGINEERING COMMAND
ATLANTIC DIVISION
NAVAL STATION — NORFOLK, VIRGINA
CONTRACT NO. N62470-97-D-5000 — DELIVERY ORDER 0017
OHM PROJECT NO. 920901 — MARINE CORPS BASE, CAMP LEJEUNE, N.C.

FIGURE 10
RANGE F-11
PROPOSED BERM & BULLET TRAP SECTION

DRAWING NUMBER:
SHEET NUMBER:
DATE: 8/18/98

G:\LANTDIV\LEJEUNE\920901\WP\FIG-10.DWG

02339011Z

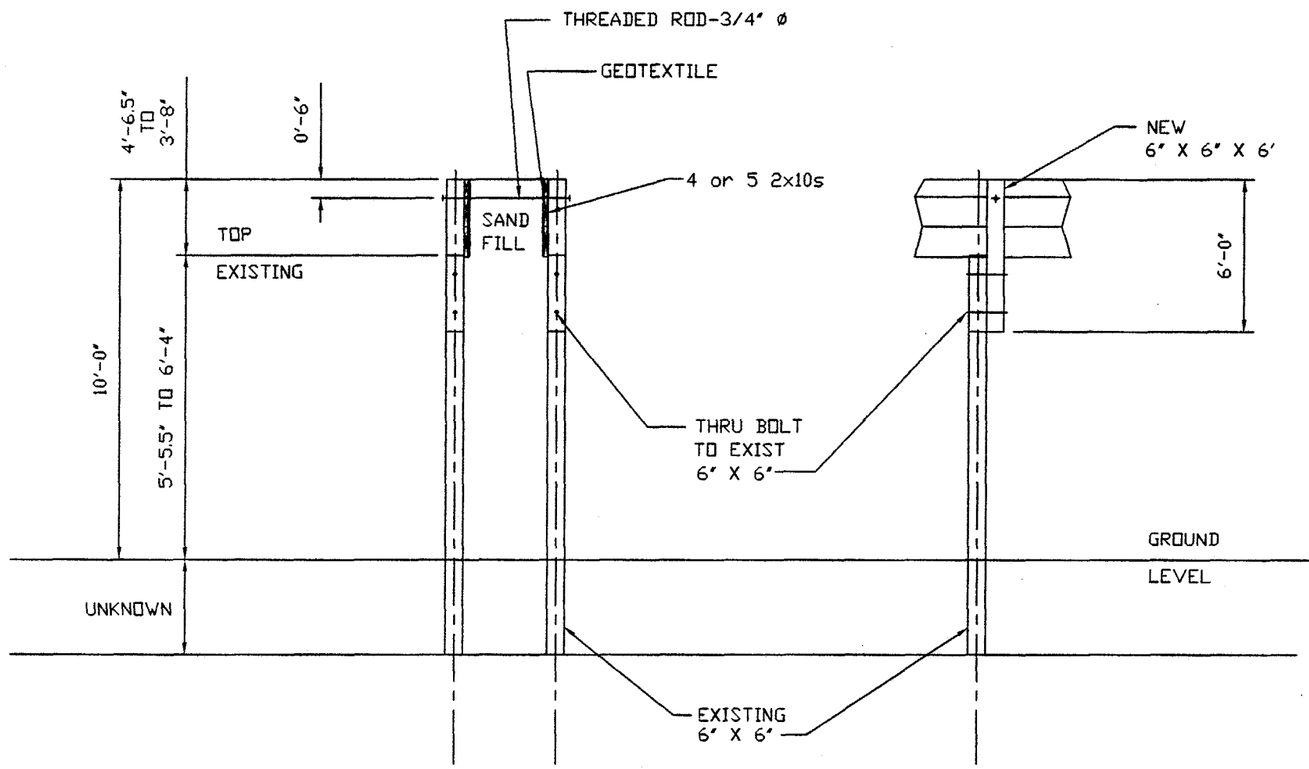

EXISTING WALL MODIFICATIONS

RANGE F-11

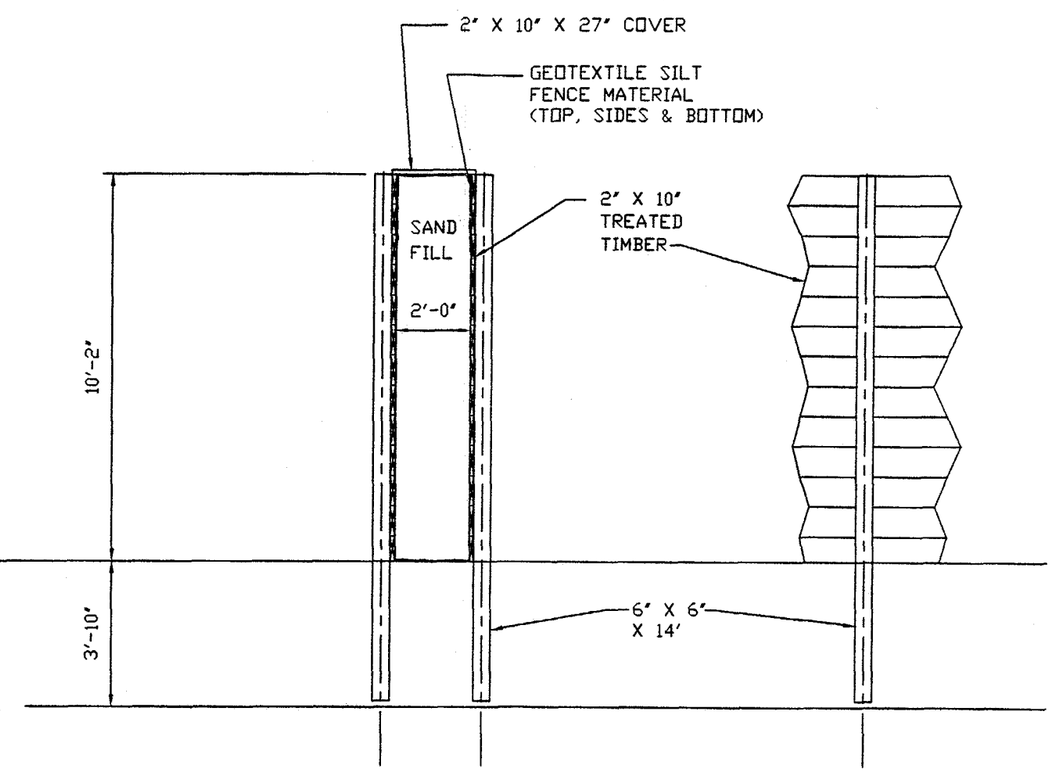

SECTION E

NEW WALLS

SCALE = 1/4" = 1'-0"

OHM Remediation Services Corp. Norcross, Georgia A Subsidiary of OHM Corporation		REVISIONS			
SUBMITTED: ____ PROJECT MANAGER DATE: ____	CADD FILE: ____	REV.	DESCRIPTION	BY	DATE	APP.
APPROVED: ____ SR. PROJECT ENGINEER DATE: ____	DRAWN: ____	1	ISSUED WITH WORK PLAN	–	10/23/98	–
APPROVED: ____ DEPT. MANAGER DATE: ____	DESIGNED: J. DUNN					
	CHECKED: J. DUNN					
	CHECKED: ____					

DEPARTMENT OF THE NAVY — NAVAL FACILITIES ENGINEERING COMMAND

ATLANTIC DIVISION

NAVAL STATION — NORFOLK, VIRGINA

CONTRACT NO. N62470-97-D-5000 — DELIVERY ORDER 0017

OHM PROJECT NO. 920901 — MARINE CORPS BASE, CAMP LEJEUNE, N.C.

FIGURE 11

OLD AND NEW WALLS
FRONT AND SIDE VIEWS

DRAWING NUMBER:

SHEET NUMBER:

DATE: 8/18/98

J:\LANTDIV\LEJEUNE\J1\WP\FIG-11.DWG

023390122

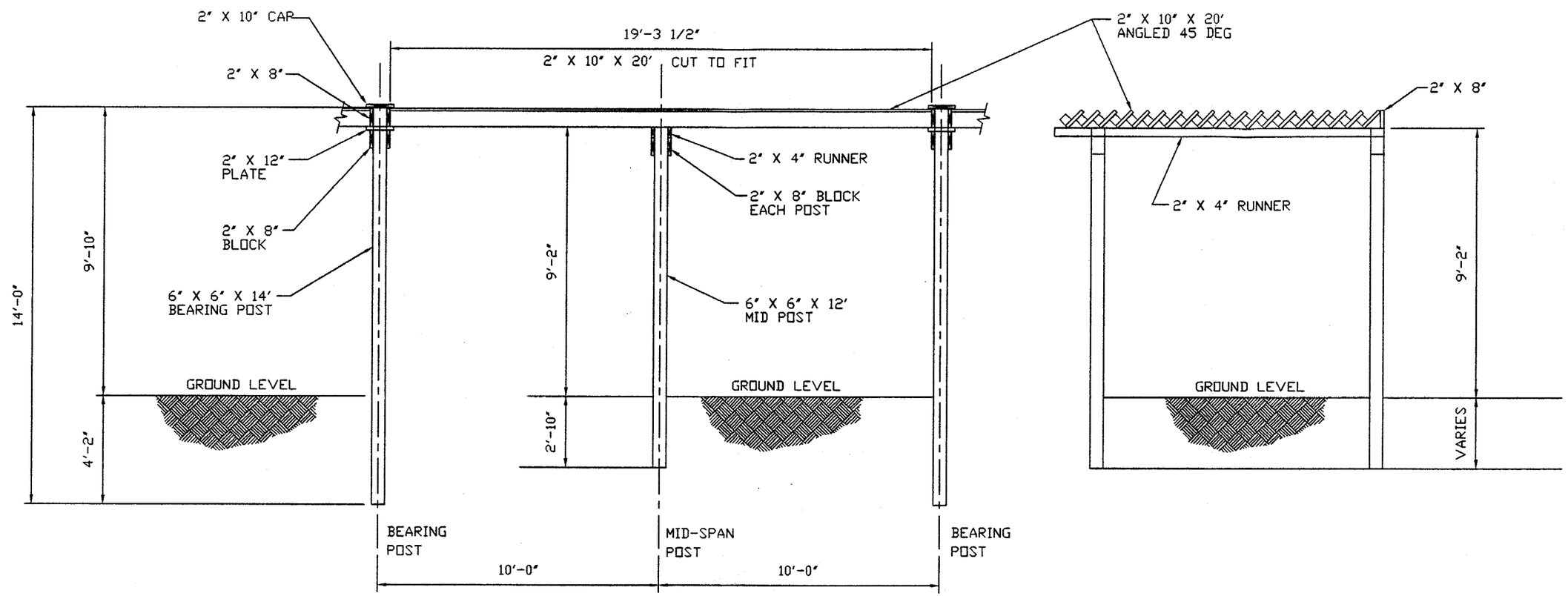

FRONT VIEW

SIDE VIEW

BAFFLE CONSTRUCTION BY OTHERS

SCALE = 1/4" = 1'-0"

J:\LANTDIV\LEJEUNE\01\WP\FIG-12.DWG

OHM Remediation Services Corp.
Norcross, Georgia
A Subsidiary of OHM Corporation

SUBMITTED: _____ PROJECT MANAGER DATE: _____
APPROVED: _____ SR. PROJECT ENGINEER DATE: _____
APPROVED: _____ DEPT. MANAGER DATE: _____

CADD FILE: _____
DRAWN: _____
DESIGNED: J. DUNN
CHECKED: J. DUNN
CHECKED: _____

REVISIONS

REV.	DESCRIPTION	BY	DATE	APP.
1	REVISED BAFFLE HEIGHT TO MATCH BULLET TRAP	–	9/15/98	JAD
2	ISSUED WITH WORK PLAN	–	10/23/98	–

DEPARTMENT OF THE NAVY — NAVAL FACILITIES ENGINEERING COMMAND
ATLANTIC DIVISION
NAVAL STATION — NORFOLK, VIRGINIA
CONTRACT NO. N62470-97-D-5000 — DELIVERY ORDER 0017
OHM PROJECT NO. 920901 — MARINE CORPS BASE, CAMP LEJEUNE, N.C.

FIGURE 12
NEW BAFFLE DETAILS
FRONT AND SIDE VIEWS

DRAWING NUMBER:
SHEET NUMBER:
DATE: 8/18/98

023390132

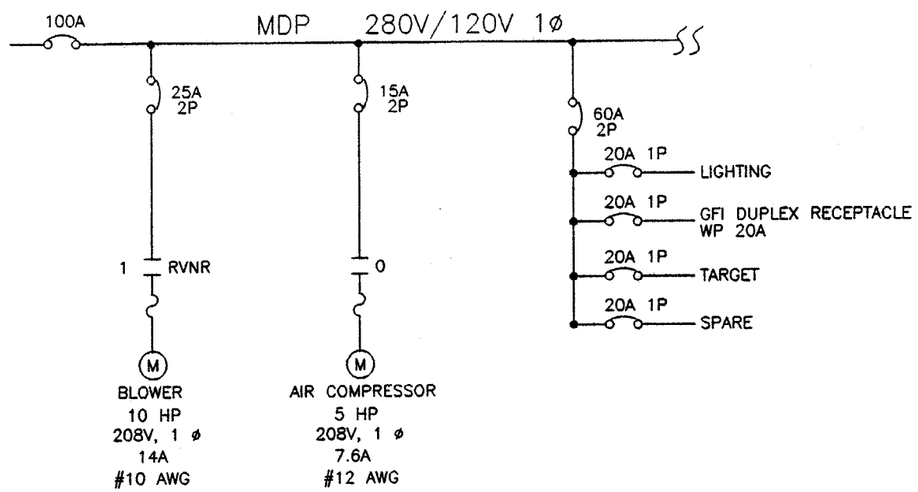

ONE LINE DIAGRAM

N.T.S.

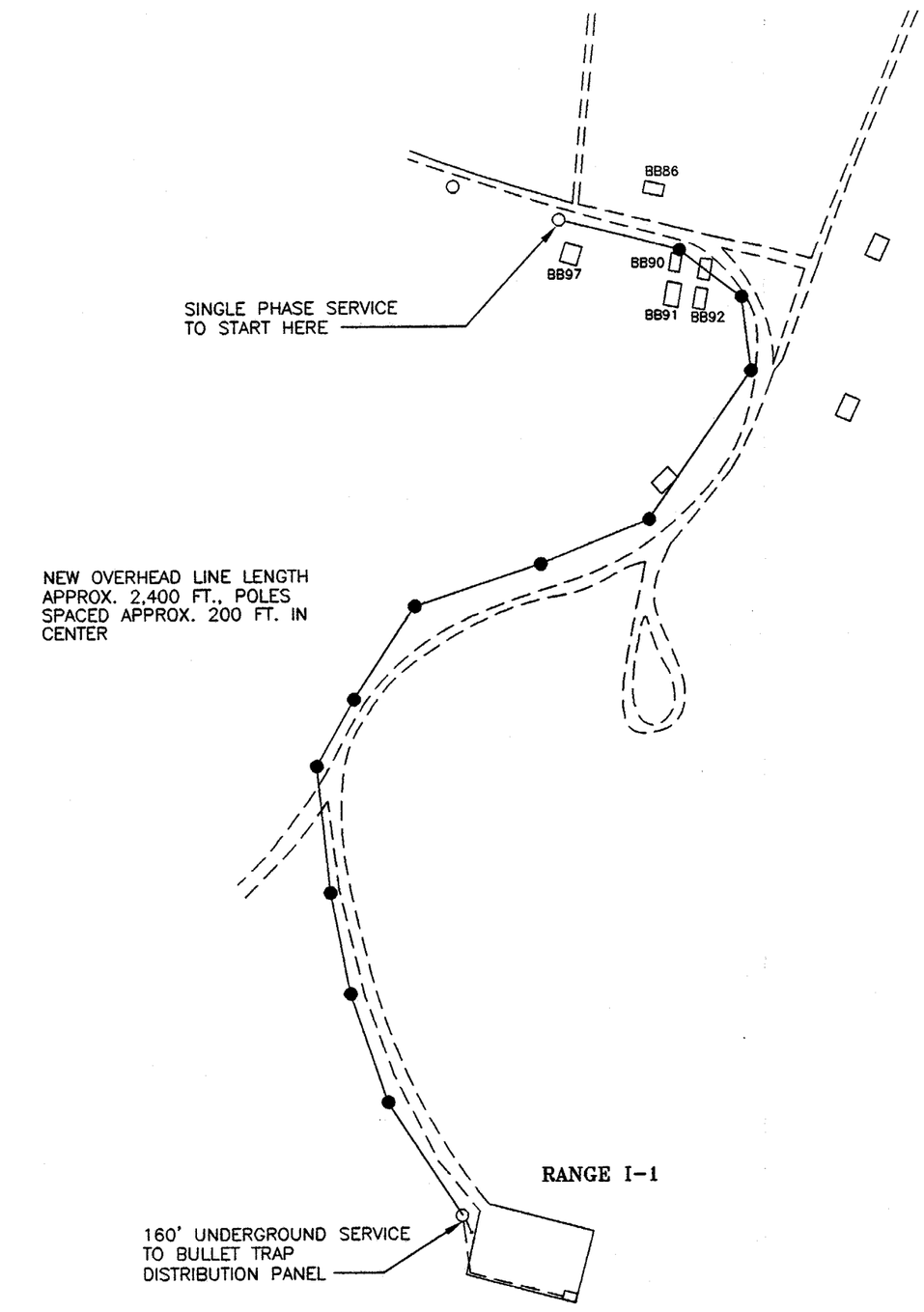

J:\LANTDIV\LEJEUNE\920901\WP\FIG-13.DWG

OHM Remediation Services Corp.
Norcross, Georgia
A Subsidiary of OHM Corporation

SUBMITTED: _____ PROJECT MANAGER DATE: _____
APPROVED: _____ SR. PROJECT ENGINEER DATE: _____
APPROVED: _____ DEPT. MANAGER DATE: _____

CADD FILE: _____
DRAWN: J. LANGE
DESIGNED: J. DUNN
CHECKED: J. DUNN
CHECKED: _____

REVISIONS

REV.	DESCRIPTION	BY	DATE	APP.
1	ISSUED WITH WORK PLAN	–	10/23/98	–

DEPARTMENT OF THE NAVY — NAVAL FACILITIES ENGINEERING COMMAND

ATLANTIC DIVISION

NAVAL STATION — NORFOLK, VIRGINA

CONTRACT NO. N62470-97-D-5000 — DELIVERY ORDER 0017

OHM PROJECT NO. 920901 — MARINE CORPS BASE, CAMP LEJEUNE, N.C.

FIGURE 13

RANGE I-1
ELECTRICAL PLANS

DRAWING NUMBER:

SHEET NUMBER:

DATE: 8/27/98

02339014Z

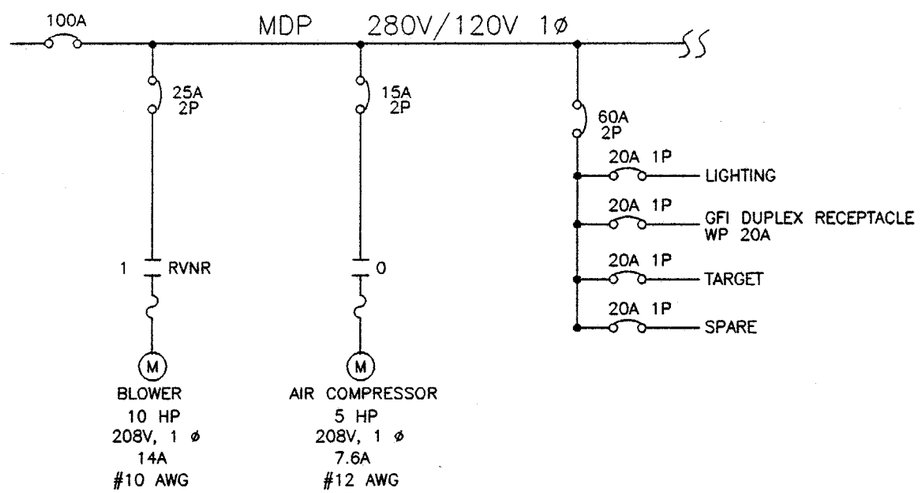

ONE LINE DIAGRAM
N.T.S.

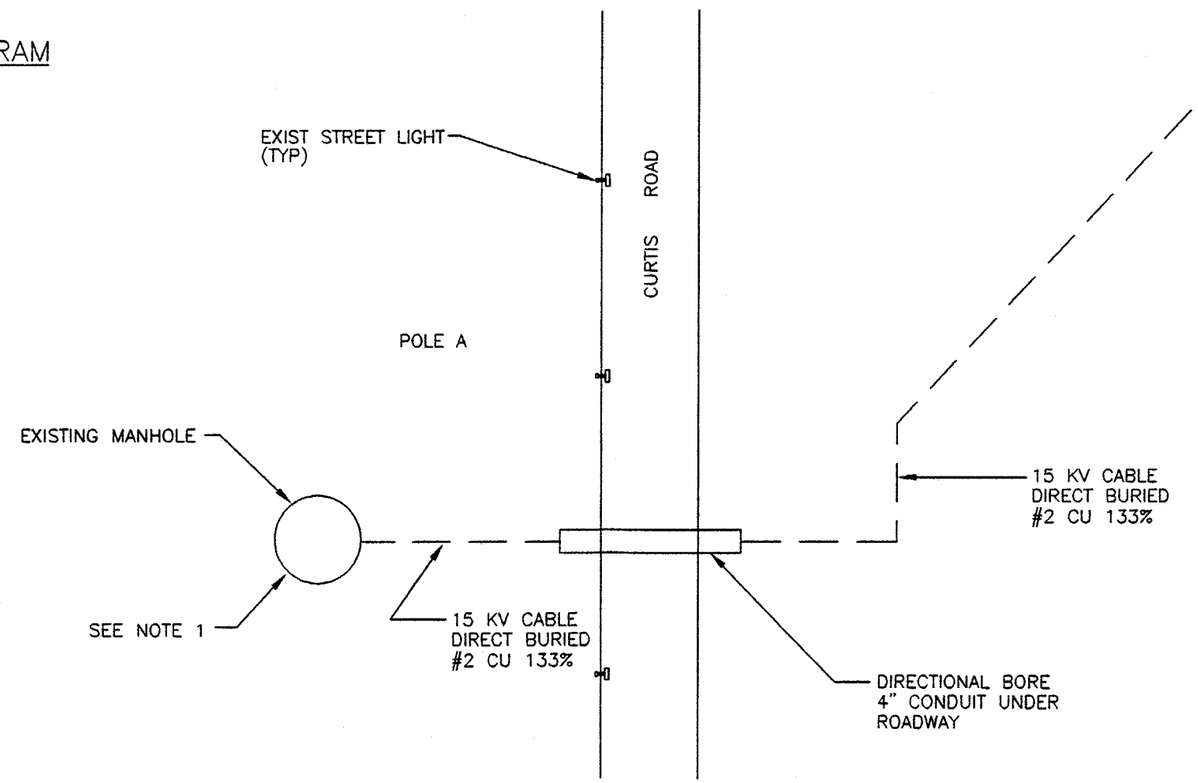

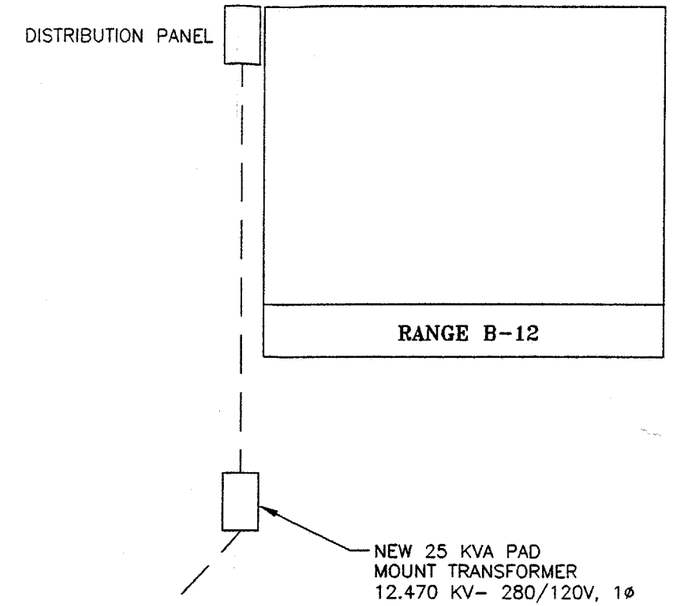

NOTES:

1. ROUTE NEW CABLE THROUGH MANHOLE WALL, MAKE 3 T SPLICE IN EXISTING PRIMARY CU.
2. MAIN DISTRIBUTION PANEL SHALL BE SERVICE RATED.

J:\LANDGOV\LEJEUNE\920901\WP\FIG-14.DWG

OHM Remediation Services Corp.
Norcross, Georgia
A Subsidiary of OHM Corporation

SUBMITTED: _____ PROJECT MANAGER DATE: _____
APPROVED: _____ SR. PROJECT ENGINEER DATE: _____
APPROVED: _____ DEPT. MANAGER DATE: _____

CADD FILE: _____
DRAWN: J. LANGE
DESIGNED: J. DUNN
CHECKED: J. DUNN
CHECKED: –

REVISIONS

REV.	DESCRIPTION	BY	DATE	APP.
1	ISSUED WITH WORK PLAN	–	10/23/98	–

DEPARTMENT OF THE NAVY — NAVAL FACILITIES ENGINEERING COMMAND
ATLANTIC DIVISION
NAVAL STATION — NORFOLK, VIRGINIA
CONTRACT NO. N62470-97-D-5000 — DELIVERY ORDER 0017
OHM PROJECT NO. 920901 — MARINE CORPS BASE, CAMP LEJEUNE, N.C.

FIGURE 14

RANGE B-12
ELECTRICAL PLANS

DRAWING NUMBER:
SHEET NUMBER:
DATE: 8/27/98

023390152

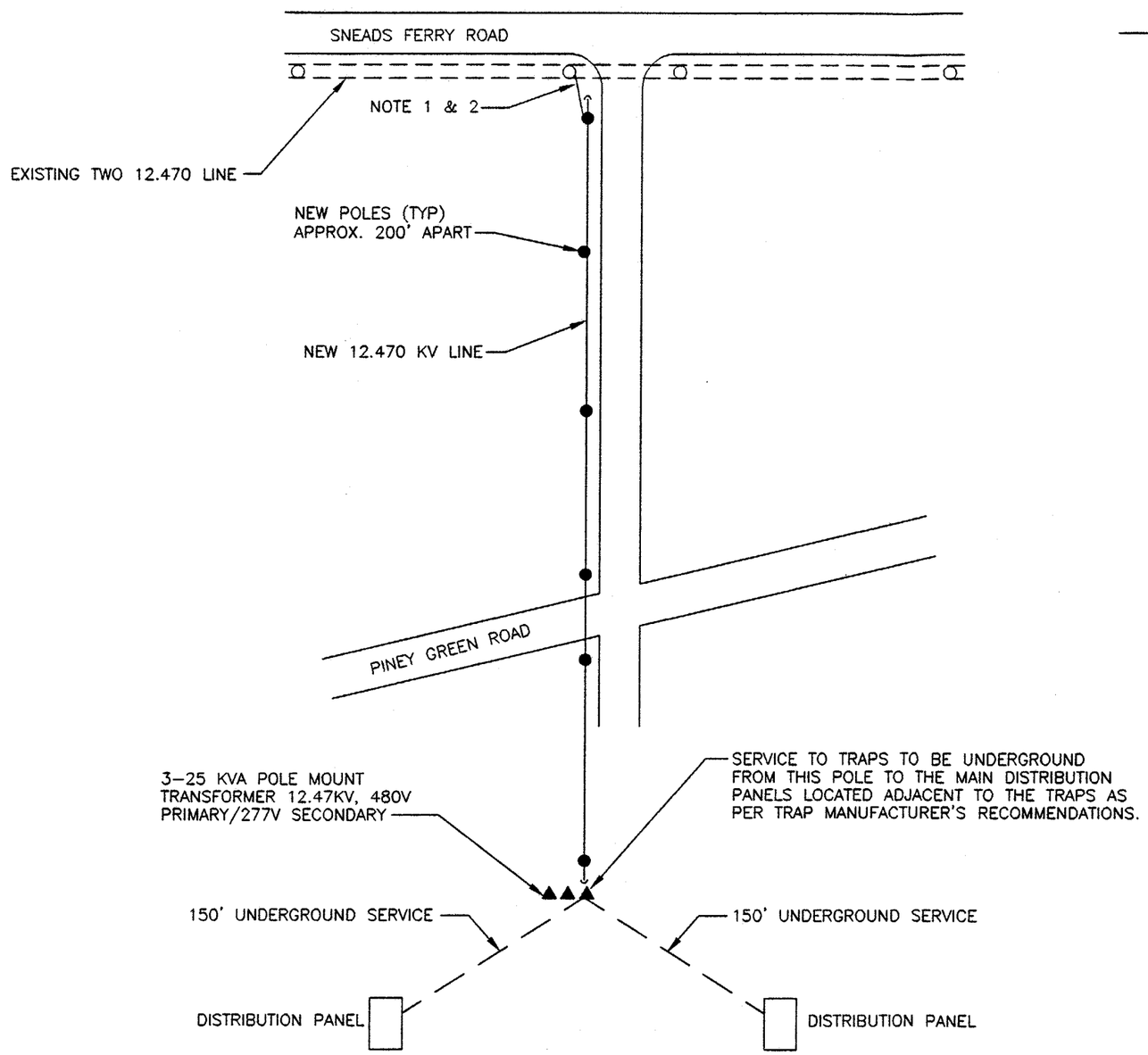

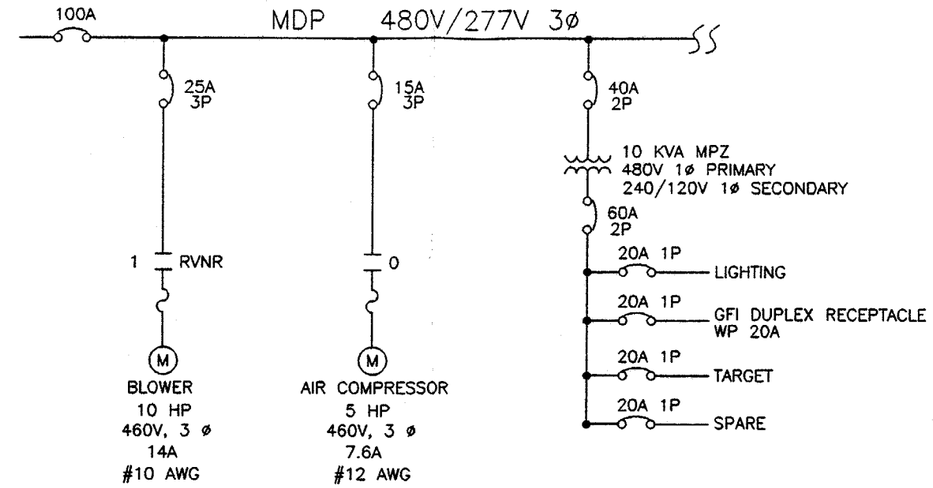

ONE LINE DIAGRAM

N.T.S.

TYPICAL EACH PANEL

NOTE:

1. INSTALL SLACK SPAN FROM EXISTING POLE TO FIRST NEW POLE TO ELIMATE SPAN GUY ACROSS SNEADS FERRY ROAD.
2. THE NEW 12.470 KV LINE NEEDS TO BE FUSED AT EXIST POLE. THE NEW LINE ALONG GRAVEL ROAD IS IN A WOODS AREA.
3. EACH DISTRIBUTION PANEL SHALL BE SERVICE RATED.

J:\LANTDIV\LEJEUNE\920901\WP\FIG-15.DWG

OHM Remediation Services Corp.
Norcross, Georgia
A Subsidiary of OHM Corporation

SUBMITTED: _____ PROJECT MANAGER DATE: _____
APPROVED: _____ SR. PROJECT ENGINEER DATE: _____
APPROVED: _____ DEPT. MANAGER DATE: _____

CADD FILE: _____
DRAWN: J. LANGE
DESIGNED: J. DUNN
CHECKED: J. DUNN
CHECKED: _____

REVISIONS

REV.	DESCRIPTION	BY	DATE	APP.
1	ISSUED WITH WORK PLAN	–	10/23/98	–

DEPARTMENT OF THE NAVY — NAVAL FACILITIES ENGINEERING COMMAND
ATLANTIC DIVISION
NAVAL STATION — NORFOLK, VIRGINA
CONTRACT NO. N62470-97-D-5000 — DELIVERY ORDER 0017
OHM PROJECT NO. 920901 — MARINE CORPS BASE, CAMP LEJEUNE, N.C.

FIGURE 15

RANGE F-11
ELECTRICAL PLANS

DRAWING NUMBER:
SHEET NUMBER:
DATE: 12/18/97

APPENDIX A

HEALTH AND SAFETY PLAN

DRAFT
SITE-SPECIFIC HEALTH AND SAFETY PLAN
MAINTENANCE AT RANGES I-1, B-12, AND F-11
MARINE CORPS BASE
CAMP LEJEUNE, NORTH CAROLINA

Prepared for:

DEPARTMENT OF THE NAVY
Contract No. N62470-97-D-5000
Atlantic Division
Naval Facilities Engineering Command
6500 Hampton Boulevard
Building A (South East Wing) 3rd Floor
Norfolk, VA 23508

Prepared by:

OHM Remediation Services Corp.
5445 Triangle Parkway, Suite 400
Norcross, GA 30092

Reviewed by:

_____
J. Angelo Liberatore, CIH
LANTDIV Health and Safety Director

_____
John Franz, P.E.
Program Manager

_____
James A. Dunn, Jr., P.E.
Senior Project Manager

October 1998
Delivery Orders 0017
OHM Project No. 920901

TABLE OF CONTENTS

1.0 INTRODUCTION 1-1
1.1 SITE HISTORY 1-1
1.2 SCOPE OF WORK 1-1

2.0 KEY PERSONNEL AND MANAGEMENT 2-1
2.1 PROJECT MANAGER 2-1
2.2 SITE SUPERVISOR 2-1
2.3 SITE SAFETY OFFICER 2-1
2.4 CERTIFIED INDUSTRIAL HYGIENIST 2-1
2.5 EMPLOYEE SAFETY RESPONSIBILITY 2-2
2.6 KEY SAFETY PERSONNEL 2-2

3.0 JOB HAZARD ANALYSIS 3-1
3.1 CHEMICAL HAZARDS 3-1
3.2 PHYSICAL HAZARDS 3-1
3.3 ENVIRONMENTAL HAZARDS 3-4
3.4 TASK-SPECIFIC RISK ASSESSMENT/ACTIVITY HAZARD ANALYSIS 3-8

4.0 WORK AND SUPPORT AREAS 4-1
4.1 EXCLUSION ZONE 4-1
4.2 CONTAMINATION REDUCTION ZONE 4-1
4.3 SUPPORT ZONE 4-1
4.4 SITE CONTROL LOG 4-1
4.5 GENERAL 4-2

5.0 PROTECTIVE EQUIPMENT 5-1
5.1 ANTICIPATED PROTECTION LEVELS 5-1
5.2 PROTECTION LEVEL DESCRIPTIONS 5-1
5.3 AIR-PURIFYING RESPIRATORS 5-2
5.4 RESPIRATOR CARTRIDGES 5-2
5.5 CARTRIDGE CHANGES 5-3
5.6 INSPECTION AND CLEANING 5-3
5.7 FIT TESTING 5-3
5.8 FACIAL HAIR 5-3
5.9 CORRECTIVE LENSES 5-3
5.10 CONTACT LENSES 5-3
5.11 MEDICAL CERTIFICATION 5-4
5.12 SITE-SPECIFIC RESPIRATORY PROTECTION PROGRAM 5-4

6.0 DECONTAMINATION PROCEDURES 6-1
6.1 PERSONNEL DECONTAMINATION 6-1
6.2 EQUIPMENT DECONTAMINATION 6-2
6.3 DISPOSAL 6-2

7.0 AIR MONITORING 7-1
7.1 LOWER EXPLOSIVE LIMIT/OXYGEN (LEL/O2) METER 7-2
7.2 PHOTOIONIZATION DETECTOR (PID) 7-2
7.3 REAL-TIME AEROSOL MONITOR (MINIRAM) 7-2
7.4 AIR SAMPLING AND ANALYSIS 7-2

7.5 AIR MONITORING LOG 7-3
7.6 CALIBRATION REQUIREMENTS 7-3
7.7 AIR MONITORING RESULTS 7-3

8.0 EMERGENCY RESPONSE 8-1
8.1 PRE-EMERGENCY PLANNING 8-1
8.2 EMERGENCY RECOGNITION AND PREVENTION 8-2
8.3 PERSONNEL ROLES, LINES OF AUTHORITY, AND COMMUNICATIONS 8-4
8.4 SAFE DISTANCES AND PLACES OF REFUGE 8-7
8.5 EVACUATION ROUTES AND PROCEDURES 8-8
8.6 EMERGENCY SPILL RESPONSE PROCEDURES AND EQUIPMENT 8-9
8.7 EMERGENCY CONTINGENCY PLAN 8-13

9.0 TRAINING REQUIREMENTS 9-1

10.0 MEDICAL SURVEILLANCE PROGRAM 10-1

APPENDIX B - OHM HAZARD COMMUNICATION PROGRAM B-1
1.0 GENERAL B-1
2.0 RESPONSIBILITIES B-1
3.0 HAZARD DETERMINATION B-4
4.0 LABELING B-4
5.0 MATERIAL SAFETY DATA SHEETS (MSDSs) B-4
6.0 EMPLOYEE INFORMATION AND TRAINING B-5
7.0 HAZARDOUS NON-ROUTINE TASKS B-6
8.0 INFORMING CONTRACTORS B-8

APPENDICES

APPENDIX A HEALTH AND SAFETY CERTIFICATION
APPENDIX B OHM HAZARD COMMUNICATION PROGRAM
APPENDIX C SITE MATERIAL SAFETY DATA SHEETS
APPENDIX D SPECIFIC OHM HEALTH AND SAFETY PROCEDURES
APPENDIX E HEALTH AND SAFETY FORMS

1.0 INTRODUCTION

This Health and Safety Plan (HASP) has been developed for United States Navy, LANTDIV, Delivery Orders 0017 for Maintenance of Ranges I-1, B-12, and F-11, MCB Camp Lejuene, North Carolina. This work will be executed per the requirements stated in the Delivery Orders under Contract No. N62470-97-D-5000.

This HASP documents the policies and procedures which protect workers and the public from potential hazards posed by work at this site. OHM considers safety the highest priority during work at a site containing potentially hazardous materials and has established a goal of zero accidents for all projects. All projects will be conducted in a manner which minimizes the probability of injury, accident, or incident occurrence. This HASP is a key element in the proper planning of project work which is necessary to assure the goal of zero accidents. The HASP Certification (Appendix A) will be signed by all who actively participate at this project.

Although this plan focuses on the specific work activities planned for this site, it must remain flexible because of the nature of this work. Conditions may change and unforeseen situations may arise that require deviations from the original plan. This flexibility allows modification by the OHM supervisors and health and safety officials with approval from the project CIH.

This plan has been prepared in accordance with OSHA's "Hazardous Waste Operations and Emergency Response" standard contained in 29 CFR 1910.120 and the U. S. Army Corps of Engineers's (USACE's) Safety and Health Requirements Manual (COE EM-385-1-1, September 1996).

1.1 SITE HISTORY

The Ranges I–1, B-12 and F-11 are currently active ranges used for small-arms Shotgun and Rifle target practice at MCB Camp Lejuene. The objective of this scope of work is to perform soil remediation of the berms at all three ranges and to install bullet traps to prevent further lead soil contamination.

1.2 SCOPE OF WORK

OHM will be mobilizing to the site to perform remedial actions consisting of excavation, screening, stabilization and re-installation of berm soils, traps and sidewalks at each range and offsite disposal of lead and contaminated debris. The following tasks will be performed during remedial actions at the site:

Task 1:	Mobilization and site preparation
Task 2:	Pre-excavation field screening
Task 3:	Clearing and grubbing
Task 4:	Excavate berm soil
Task 5:	Screen berm soil
Task 6:	Stabilize and sample berm soil
Task 7:	Berm restoration
Task 8:	Loadout, transportation and disposal

Task 9:	Decontaminate equipment
Task 10:	Install bullet traps
Task 11:	Site restoration
Task 12:	Demobilization

These activities have been analyzed for potential hazards for which hazard control measures are provided in Section 3.4 Activity Hazard Analysis.

2.0 *KEY PERSONNEL AND MANAGEMENT*

The Project Manager (PM), Site Supervisor (SS), Certified Industrial Hygienist (CIH) and Site Safety Officer (SSO) are responsible for formulating and enforcing health and safety requirements, and implementing the HASP.

2.1 PROJECT MANAGER

The PM has the overall responsibility for the project and to assure that the goals of the construction remedial action are attained in a manner consistent with the HASP requirements. The PM will coordinate with the SS and the SSO to assure that the remedial action goals are completed in a manner consistent with the HASP. The PM will identify contacts and telephone numbers, with assistance from LANTDIV, of local health care providers, the NOSC/NOSCDR, the LEPC and other agencies that may be asked to provide emergency support during project activities. The PM will conduct a monthly health and safety audit of the project using the Management Health and Safety Report Form.

2.2 SITE SUPERVISOR

The SS is responsible for field implementation of the HASP. The SS will coordinate with the SSO to establish communications with local health care providers, the NOSC/NOSCDR, the LEPC and other outside organizations and agencies that may be asked to provide emergency support during project activities. The SS will be the main contact in any on-site emergency situation. The SS will conduct periodic inspection of the work site to confirm compliance with all health and safety requirements. The SS is also responsible for coordinating remedial actions for all deficiencies and for enforcing the OHM "Cardinal Safety Rules" (included in Appendix E) and the site specific health and safety procedures (included in Appendix B).

2.3 SITE SAFETY OFFICER

The SSO has responsibility for administering the HASP relative to site activities, and will be in the field full-time while site activities are in progress. The SSO's primary operational responsibilities include personal and environmental monitoring, coordination of job safety analyses, personal protective equipment maintenance, and assignment of protection levels. The SSO will direct all field activities involved with safety and is authorized to stop work when an imminent health or safety risk exists. The SSO is responsible for assuring that all on-site personnel understand all safety requirements.

2.4 CERTIFIED INDUSTRIAL HYGIENIST

The CIH is responsible for the contents of the HASP and ensures that the HASP complies with all federal, state and local health and safety requirements. If necessary, the CIH can modify specific aspects of the HASP to adjust for on-site changes that affect safety. The CIH will coordinate with the SSO on all modifications to the HASP and will be available for consultation when required. The CIH will not necessarily be on site during OHM activities; however, he may perform site safety audits to confirm field compliance with the HASP.

2.5 EMPLOYEE SAFETY RESPONSIBILITY

Each employee is responsible for personal safety as well as the safety of others in the area. The employee will use all equipment provided in a safe and responsible manner as directed by the SS. All OHM personnel will follow the policies set forth in OHM's Health and Safety Procedures Manual, with particular emphasis on the OHM "Cardinal Safety Rules," which will be maintained on-site by the site safety officer. Specific health and safety procedures applicable to this project are provided in Appendix D of this plan.

2.6 KEY SAFETY PERSONNEL

The following individuals share responsibility for health and safety at the site.

Project Manager	Jim Dunn (770) 734-8072 Office (800) 999-6710 Pager 9968061 Pin
Site Supervisor	Randy Smith (910) 451-2390 Office (910) 346-7110 Pager
Site Safety Officer	Ralph Richards (910) 451-2390 Office
Program Manager for LANTDIV	John Franz, P.E. (609) 588-6477
SR Health and Safety Director/Project CIH	J. Angelo Liberatore, CIH (770) 453-7671 Office 1-800-999-6710 PIN 997-6102 Pager

3.0 JOB HAZARD ANALYSIS

This section outlines the potential chemical and physical hazards which workers may be exposed to during work on this project. Table 3.1 lists significant contaminants identified at the site and their respective published occupational exposure limits. The OSHA permissible exposure limits (PELs) and the ACGIH threshold limit values (TLVs) were reviewed for these contaminants, evaluated, and the more stringent value of the two selected as exposure guidelines. An MSDS list is included in Appendix C.

3.1 CHEMICAL HAZARDS

The main chemical hazard posed by remedial actions is inhalation and ingestion of lead contaminated soil/debris. Consistent with OSHA's "Lead Standard" contained in 29 CFR 1926.62, site personnel potentially exposed to lead will be provided pre- and post-project lead biological monitor and lead awareness training. In addition , personnel lead air sampling and analysis will be performed on personnel with the highest potential lead exposure during remedial activities, to verify the proper level of protection and the need to provide daily shower facilities. The following summarizes the chemical hazards posed by lead exposures:

Lead **Permissible Exposure Limit = 0.05 mg/m^3**

Exposure to lead can be from inhalation of dusts or from skin exposure. Symptoms are nonspecific and can be hard to distinguish from minor seasonal illnesses. The symptoms are decreased physical fitness, fatigue, sleep disturbance, headache, aching bones and muscles, digestive disorders (particularly constipation), abdominal pains, and decreased appetite.

3.2 PHYSICAL HAZARDS

To minimize physical hazards, OHM has developed standard safety protocols which will be followed at all times. Failure to follow safety protocols will result in expulsion of an employee from the site and appropriate disciplinary actions.

The SS and SSO will observe the general work practices of each crew member and equipment operator, and enforce safe procedures to minimize physical hazards. Hard hats, safety glasses, and steel-toe safety boots are required in all areas of the site. Site-specific hazards and all necessary precautions will be discussed at the daily safety meetings. The Health and Safety Procedures Manual for LANTDIV will be maintained at the project site as a reference document.

The following sections are typical safety hazards that may occur at project site along with relevant hazard control procedures.

- **Heavy and Bulky Loads**

Intelligent thought shall be exercised before heavy and bulky loads are lifted or handled manually by personnel. Mechanical equipment such as fork-lifts, wheel barrows, hand-trucks, loaders, and cranes shall be utilized when possible and needed. **Note: Back injuries are real, debilitating, unproductive, and costly to both employees and employers, and sometime permanent. Back injury prevention must be given high priority on all project sites. If you think the load you are about to lift is too heavy or bulky, it probably is! Get help or utilize mechanical equipment.**

- **High Pressure Washing**

  Washing or cleaning certain pieces of equipment may require the use of high pressure washers, referred to as lasers. These devices can be hazardous if not used properly. Specific laser safety instructions are provided in Procedure No. 30. The following protective equipment will be worn: safety shoes or boots, metal foot and shin guards, goggles and face shield, hard hat, heavy-duty PVC rain suit, heavy chemical resistant gloves. Only trained personnel will operate the high pressure washer. The operator must have an assistant to move the hose and back-up the operator. Other personnel must remain a minimum of 25 feet from the area. The equipment cannot be altered. (Trigger shall never be tied down.) Operator should be changed every hour. Hydroblasting lacerations are serious and must be reported.

- **Small Quantity Flammable Liquids**

  Small quantities of flammable liquids will be stored in "safety"cans and labeled according to contents.

- **Electrical Hazards**

  Overhead power lines, downed electrical wires, and buried cables all pose a danger of shock or electrocution if workers contact or sever them during site operations. Electrical equipment used on-site may also pose a hazard to workers. To help minimize this hazard, low-voltage equipment with ground-fault interrupters and water-tight, corrosion-resistant, connecting cables will be used on-site. In addition, lightning is a hazard during outdoor operations, particularly for workers handling metal containers or equipment. To eliminate this hazard, weather conditions will be monitored and work will be suspended during electrical storms. An additional electrical hazard involves capacitors that may retain a charge. All such items will be properly grounded before handling. OSHA's standard 29 CFR Part 1910.137 describes clothing and equipment for protection against electrical hazards.

  Electrical devices and equipment must be de-energized prior to working near them. All extension cords must be kept out of water, protected from crushing, and inspected regularly to ensure structural integrity. Temporary electrical circuits must be protected with ground fault interrupters. Only qualified electricians are authorized to work on electrical circuits.

- **Slip/Trip/Fall Hazards**

  Some areas may have wet surfaces which will greatly increase the possibility of inadvertent slips. Caution must be exercised when using steps and stairs due to slippery surfaces in conjunction with fall hazards. Use of handrails when climbing stairs will be enforced, and handrails will remain secure until the support itself is removed and lowered to ground level. Good housekeeping practices are essential to minimize trip hazards. Safety belts or harnesses will be required by personnel working four feet or more above surfaces, including manlifts.

  The work area shall be kept clean and orderly. Tools and debris must be picked up and placed in the proper place to prevent a tripping hazard. Walkways and grating shall be kept in good condition. Spills will be cleaned up immediately. Personnel shall not walk or climb on piping, valves, fittings, or any other equipment not designed as walking surfaces.

- **Ground Personnel**

  All ground personnel should be constantly aware of the possibility of slips, trips, and falls due to poor and possibly slippery footing in the work areas. before crossing either in front of or behind a piece of heavy equipment, ground personnel will signal the equipment operator and receive confirmation before moving.

- **Head and Back Injuries**

  As minimum requirements, hard hats and safety glasses will be donned prior to performing any site activities. This requirement will prevent minor injuries caused by bumping one's head while working around and under piping and other process related structures. At the daily safety meeting, personnel are instructed in proper lifting techniques and reminded not to lift heavy items without assistance.

- **Falling Objects**

  OHM believes that the dismantlement process as well as other remediation processes can be accomplished without any object, regardless of size, free falling to the ground. All support structures will be slowly lowered to the ground using a grapple and/or skip bucket. No personnel shall work under this equipment at any time. Also, the SSO will ensure that an adequate area is clear of personnel while the equipment is in operation.

- **Equipment and Hand Tools**

  All hand tools and power tools shall be in good repair and will be used only for the task for which they were designed. All damaged tools will be tagged "Out of Service." All tools will be kept clean. Sharp tools shall not be carried in pockets. When working, overhead tools will be placed in a holding receptacle or secured when not in use. Tools cannot be thrown or dropped from heights. Only non-sparking

tools will be used in flammable or explosive atmospheres. Cheater pipes will not be used.

- **Ladders**

  Access to high places will be obtained by using approved ladders and stairs in accordance with ANSI 14.1-3. Ladders will be used for access to and from the excavation.

3.3 ENVIRONMENTAL HAZARDS

Environmental factors such as weather, wild animals, insects, and irritant plants pose a hazard when performing outdoor work. The SSO and SS will take all necessary measures to alleviate these hazards should they arise.

3.3.1 Heat Stress

The combination of warm ambient temperature and protective clothing result in the potential for heat stress. Heat stress disorders include:

- Heat rash
- Heat cramps
- Heat exhaustion
- Heat stroke

Heat stress prevention is outlined in procedure No. 22 of the OHM Corp. Health and Safety Procedures manual. This information will be reviewed during safety meetings. Workers will be encouraged to increase consumption of water and electrolyte-containing beverages (e.g., Gatorade).

The following is a summary of the signs and symptoms of heat stress disorders.

- Heat rash – characteristic rash which may develop on the skin in areas which may be chapped by clothing. Frequent clothing changes help to prevent chapping from contact with wet clothes.

- Heat cramps – caused by heavy sweating and inadequate electrolyte replacement. Provide frequent breaks with fluid replacement. Cramps are usually relieved when victim is moved to a cool resting place and provided fluids every 15 minutes for approximately 1 hour. Symptoms include:
  - Muscle spasms
  - Pain in the hands, feet, abdomen

- Heat exhaustion – caused by increased stress of various body organs including inadequate blood circulation due to cardiovascular insufficiency or dehydration. Immediately remove the victim from the hot environment and provide rest while

lying the victim down with feet elevated, and care for shock. Attempt to cool the victim by fanning or applying wet towels. Provide fluid replacement every 15 minutes and refer for medical evaluation if not improved within 30 minutes. Symptoms include:

- Pale, cool, moist skin
- Heavy sweating
- Dizziness
- Nausea
- Fainting

- Heat stroke – temperature regulation fails and the body core temperature rises to critical levels. Immediate action must be taken to cool the body. Competent medical care must be obtained immediately since this is a life threatening disorder. Symptoms include:
  - Hot, dry skin, usually red, mottled or cyanotic
  - 104° temperature
  - Confusion, dizziness
  - Loss of consciousness
  - Convulsions
  - Strong, rapid pulse

It is recommended that workers break at least every two hours for 10 to 15 minute rest periods when temperatures rise above 72.5 degrees F and protective clothing is worn. Ambient temperatures will be determined from a Hg/glass thermometer shielded from radiant heat. In addition, workers are encouraged to take rests whenever they feel any adverse effects that may be heat-related. The frequency of breaks may need to be increased upon worker recommendation to the SSO and SS. Heat stress can be prevented by assuring an adequate work/rest schedule; guidelines are printed below.

AMBIENT TEMPERATURE	LEVEL D PPE	LEVEL C PPE/ MODIFIED LEVEL D
90° F or above	After 45 minutes of work	After 15 minutes of work
87.5 F-90 F	After 60 minutes of work	After 30 minutes of work
82.5-87.5 F	After 90 minutes of work	After 60 minutes of work
77.5-82.5 F	After 120 minutes of work	After 90 minutes of work
72.5-77.5 F	After 150 minutes of work	After 120 minutes of work

The work/rest schedule can be calculated based on heat stress monitoring results. Monitoring consists of taking the radial pulse of a worker for 30 seconds immediately after exiting the work area. If the heart rate exceeds 110 beats per minute at the beginning of the rest period, shorten the next work cycle by 1/3 and keep the rest period the same. If the heart rate still exceeds 110 beats per minute at the next rest period, decrease the work period by 1/3. The initial rest period should be at least 10 minutes.

Monitoring for heat stress will begin when the ambient temperature reaches or exceeds 70 degrees Fahrenheit when wearing Level C PPE, or 80 degrees Fahrenheit for site activities performed in Level D. Monitoring will include pulse rate, weight loss, oral temperature and signs and symptoms of heat stress. The employees radial pulse will be monitored for 30 seconds to determine heart rate. When monitored, oral temperatures (OT) will be obtained utilizing a clinical thermometer or equivalent. If the employees' OT exceeds 99.6°F, the work period will be reduced by 1/3. If after this work period, the oral temperature still exceeds 99.6°F, the work period will again be shortened by 1/3. If the employee's OT exceeds 100.6°F, the employee will not be permitted to wear PPE. See Procedure 22 LANTDIV Health and Safety Procedures Manual.

3.3.2 Exposure to Cold

With outdoor work in the winter months, the potential exists for hypothermia and frostbite. Protective clothing greatly reduces the possibility of hypothermia in workers. However, personnel will be instructed to wear warm clothing and to stop work to obtain more clothing if they become too cold. Employees will also be advised to change into dry clothes if their clothing becomes wet from perspiration or from exposure to precipitation. Since wind chill temperature takes into account the potential for loss of body heat through convection, the wind-chill adjusted temperature will be used to evaluate for potential cold stress occurrence.

In cold weather, the potential for frostbite exists, especially in body extremities. Personnel will be instructed to pay particular attention to hands, feet, and any exposed skin when dressing. Personnel will be advised to obtain more clothing if they begin to experience loss of sensation due to cold exposure.

Employees will be encouraged to use the heated shelters on site at regular intervals depending upon the severity of ambient temperatures. When temperatures are less than 20°F (actual or wind chill) workers should break regularly to the heated shelter to warm up (every 45 minutes at a minimum). Since cold weather does cause significant water loss as a result of the dryness of the air, fluid intake will be encouraged to prevent dehydration which directly affects blood volumes and flow to the extremities. Warm, sweet, caffeine-free, nonalcoholic drinks and soup offer the best fluid replacement and provide calorie energy. Symptoms of cold stress, including heavy shivering, excessive fatigue, drowsiness, irritability, or euphoria necessitate immediate return to the shelter.

3.3.3 Project Hazard Communication

The purpose of hazard communication (Employee Right-to-Know) is to ensure that the hazards of all chemicals located at this field project site are transmitted (communicated) according to 29 CFR 1926.59 to all OHM personnel and OHM subcontractors. OHM's Corporate Hazard Communication Program is included in Appendix B for reference. Hazard communication will include the following:

- **Container Labeling**
  OHM personnel will ensure that all drums and containers are labeled according to contents. These drums and containers will include those from manufacturers and those produced on site by operations. All incoming and outgoing labels shall be checked for identity, hazard warning, and name and address of responsible party.

- **Material Safety Data Sheets (MSDSs)**
  There will be an MSDS located on site for each hazardous chemical known to be used on site. All MSDSs will be located in Appendix C of the SHSP. The site safety plan can be found in the project office trailer.

- **Employee Information and Training**
  Training employees on chemical hazards is accomplished through on ongoing corporate training program. Additionally, chemical hazards are communicated to employees through daily safety meetings held at OHM field projects and by an initial site orientation program.

At a minimum, OHM and related subcontractor employees will be instructed on the following:

- Chemicals and their hazards in the work area
- How to prevent exposure to these hazardous chemicals
- What the company has done to prevent workers' exposure to these chemicals
- Procedures to follow if they are exposed to these chemicals.
- How to read and interpret labels and MSDSs for hazardous substances found on OHM sites
- Emergency spill procedures
- Proper storage and labeling

Before any new hazardous chemical is introduced on site, each OHM and related subcontractor employee will be given information in the same manner as during the safety class. The site supervisor will be responsible for seeing that the MSDS on the new chemical is available for review by on site personnel. The information pertinent to the chemical hazards will be communicated to project personnel.

Morning safety meetings will be held and the hazardous materials used on site will be discussed. Attendance is mandatory for all on site employees.

Refer to Appendix C of the site safety plan to find a list of hazardous chemicals anticipated to be brought to the site and the corresponding MSDSs for these chemicals.

3.3.4 Noise

Hearing protection is required for workers operating or working near heavy equipment, where the noise level is greater than 85 dbA (Time Weighted Average) as well as personnel working around heavy equipment. The SSO will determine the need and appropriate testing procedures, (i.e., sound level meter and/or dosimeter) for noise measurement.

3.4 TASK-SPECIFIC RISK ASSESSMENT/ACTIVITY HAZARD ANALYSIS

Prior to beginning each major phase of work, an activity hazard analysis (form included in Appendix E) will be performed. The analysis will define the activity being performed, identify the sequence of work, the specific hazards anticipated and the control measures to be implemented to eliminate or reduce each hazard to an acceptable level.

Work will not proceed on that project phase until the activity hazard analysis has been accepted by the designated on-site authority, as well as being discussed with all site personnel that will perform the activity. The following Task-Specific Risk Assessment/Activity Hazard Analysis identifies the major project phases and anticipated hazards to be encountered and control measures that will be instituted during the execution of the scope of work, previously approved by LANTDIV for this project.

Task 1 – Mobilization and Site Preparation

Principle Steps Establish and post emergency procedures. Review SHSP with all site personnel. Set-up work zones, decontamination facilities and equipment staging pads. Stage emergency stand-by equipment near EZ access control point.	
Potential Hazards Involved	**Hazard Control Measures**
Vehicle operating hazards	• Operators are responsible for the safe and legal operation of vehicles • Seat belt use is mandatory for operator and passengers • Personnel shall drive at posted speed limits or at safe speeds • Follow OHM SOP for Vehicle Safety (No. 2-1)
Manual lifting / material handling hazards	• Make certain the load can be lifted safely • Do not lift more than 60 pounds • Use proper lifting techniques. Bend knees. Do not lift & twist • Follow OHM SOP for Personnel Lifting Safety (No. 2-3)
Slips, trips, and falls	• Maintain good housekeeping • Pick up tools and debris • Clean up spills immediately • Walk or climb only on equipment surfaces designed for personnel access • Follow OHM SOP for Slips, Trips and Falls (No. 2-4 & 2-9)
Heavy equipment traffic and use	• Heavy equipment must have fully functioning safety devices • Equipment operators are responsible for the safety of ground personnel • Do not suspend or swing load overhead of ground personnel • Do not carry or lift personnel except in an approved safety platform • Personnel shall be cognizant of the boom swing area and stay clear • To approach equipment, make eye contact/signal operator to cease activity and wait for operator acknowledgment • Follow OHM SOP for Equipment Inspection (No. 2-7)
Electrical hazards	• Electrical work will be performed by approved electricians only • No electrical work should be done on an energized circuit • Test to ensure circuit is de-energized prior to start • Follow OHM SOP for Lockout/tag-out (No. 6-4) • Electrical hand tools must be grounded or double insulated • Temporary electrical connections must be GFI protected • Follow OHM SOP for Electrical Safety (No. 2-5)
Contact with utilities	• Locate all buried utilities prior to subsurface activities • Maintain 15-ft between heavy equipment and overhead utilities
Portable power tool hazard	• All hand and power tools shall be in good repair • When working overhead, tools not in use will be secured • Do not throw or drop tools from heights • Follow OHM SOP for Equipment and Hand Tools (No. 7-7)

Task 2 – Pre-excavation field screening

Principle Steps Collect sample with hand auger and prepare sample for transport.	
Potential Hazards Involved	**Hazard Control Measures**
Manual lifting / material handling hazards	• Make certain the load can be lifted safely • Do not lift more than 60 pounds • Use proper lifting techniques. Bend knees. Do not lift & twist • Follow OHM SOP for Personnel Lifting Safety (No. 2-3)
Slips, trips, and falls	• Maintain good housekeeping • Pick up tools and debris • Clean up spills immediately • Walk or climb only on equipment surfaces designed for personnel access • Follow OHM SOP for Slips, Trips and Falls (No. 2-4 & 2-9)
Exposure to hazardous materials.	• Wear required PPE • Follow this SHSP
Shooting hazard	• Ensure shooting range is closed and posted to warn workers of workers in shooting range

Task 3 – Clearing and Grubbing

Principle Steps Use brush hog with tractor or heavy equipment to clear and grub areas to be excavated.	
Potential Hazards Involved	**Hazard Control Measures**
Slips, trips, and falls	• Maintain good housekeeping • Pick up tools and debris • Clean up spills immediately • Walk or climb only on equipment surfaces designed for personnel access • Follow OHM SOP for Slips, Trips and Falls (No. 2-4 & 2-9)
Exposure to hazardous materials.	• Wear required PPE. Wear splash protection as appropriate • Follow this SHSP
Noise	• Personnel will wear hearing protection above 85 decibels • Post warning signs in high noise level areas • Follow SOP for Hearing Conservation Program (No. 3-3)
Flammable liquids	• Spills will be cleaned up immediately • Approved safety can must be used • No smoking signs are required in storage and fueling areas • Suitable storage area must be designated on temporary job sites • Follow OHM SOP for Solvents and Flammable Liquids (No. 7-9)
Chainsaw cutting hazard	• Provide training and wear chainsaw chap protection and follow the manufacturer's operations manual
Falling trees, limbs, and debris from power mower	• Keep personnel away from tree felling and mowing operations
Shooting hazard	• Ensure shooting range is closed and posted to warn workers of workers in shooting range

Task 4 – Excavate berm soil

Principle Steps Use heavy equipment to excavate berm soil to approximate 2 to 4 foot depths and stockpile contaminated soil	
Potential Hazards Involved	**Hazard Control Measures**
Manual lifting / material handling hazards	• Make certain the load can be lifted safely • Do not lift more than 60 pounds • Use proper lifting techniques. Bend knees. Do not lift & twist • Follow OHM SOP for Personnel Lifting Safety (No. 2-3)
Slips, trips, and falls	• Maintain good housekeeping • Pick up tools and debris • Clean up spills immediately • Walk or climb only on equipment surfaces designed for personnel access • Follow OHM SOP for Slips, Trips and Falls (No. 2-4 & 2-9)
Heavy equipment traffic and use	• Heavy equipment must have fully functioning safety devices • Equipment operators are responsible for the safety of ground personnel • Do not suspend or swing load overhead of ground personnel • Do not carry or lift personnel except in an approved safety platform • Personnel shall be cognizant of the boom swing area and stay clear • To approach equipment, make eye contact/signal operator to cease activity and wait for operator acknowledgment • Follow OHM SOP for Equipment Inspection (No. 2-7)
Contact with utilities	• Locate all buried utilities prior to subsurface activities • Maintain 15-ft between heavy equipment and overhead utilities
Excavation and cave-in hazards	• Locate and mark all buried utilities prior to start • Stockpile excavated material greater than 2-ft from edge of excavation • A competent person will conduct daily inspections using the OHM Excavation Permit for excavations 4-ft or more in depth • Slope excavations requiring personnel entry 1½ to 1 (H:V) and equal or greater than 5-ft deep • Perform LEL/O2 air monitoring prior to personnel entry when potentially hazardous atmospheres are present • Follow OHM SOP (No. 6-5)
Exposure to hazardous materials.	• Wear required PPE. • Follow this SHSP
Vehicle operating hazards	• Operators are responsible for the safe and legal operation of vehicles • Seat belt use is mandatory for operator and passengers • Personnel shall drive at posted speed limits or at safe speeds • Dump trucks must be equipped with back-up alarms or spotter must be provided • Follow OHM SOP for Vehicle Safety (No. 2-1)
Noise	• Personnel will wear hearing protection above 85 decibels • Post warning signs in high noise level areas • Follow SOP for Hearing Conservation Program (No. 3-3)
Shooting hazard	• Ensure shooting range is closed and posted to warn workers of workers in shooting range

Task 5 – Screen berm soil

Principle Steps Use heavy equipment to load soil into screening equipment; vibratory screen separates metal bullet fragments from soil; segregate metal bullet fragments for recycling.	
Potential Hazards Involved	**Hazard Control Measures**
Manual lifting / material handling hazards	• Make certain the load can be lifted safely • Do not lift more than 60 pounds • Use proper lifting techniques. Bend knees. Do not lift & twist • Follow OHM SOP for Personnel Lifting Safety (No. 2-3)
Slips, trips, and falls	• Maintain good housekeeping • Pick up tools and debris • Clean up spills immediately • Walk or climb only on equipment surfaces designed for personnel access • Follow OHM SOP for Slips, Trips and Falls (No. 2-4 & 2-9)
Heavy equipment traffic and use	• Heavy equipment must have fully functioning safety devices • Equipment operators are responsible for the safety of ground personnel • Do not suspend or swing load overhead of ground personnel • Do not carry or lift personnel except in an approved safety platform • Personnel shall be cognizant of the boom swing area and stay clear • To approach equipment, make eye contact/signal operator to cease activity and wait for operator acknowledgment • Follow OHM SOP for Equipment Inspection (No. 2-7)
Caught in/between moving parts	• Only trained, authorized personnel will operate screening equipment • Conveyor moving parts must be guarded • Use lockout/tag-out procedures before working on equipment • Do not place hands or arm or feet in feed hopper during operation • Maintain screening equipment in safe operating condition with all guards in place when in use
Exposure to hazardous materials.	• Wear required PPE. • Follow this SHSP
Vehicle operating hazards	• Operators are responsible for the safe and legal operation of vehicles • Seat belt use is mandatory for operator and passengers • Personnel shall drive at posted speed limits or at safe speeds • Dump trucks must be equipped with back-up alarms or spotter must be provided • Follow OHM SOP for Vehicle Safety (No. 2-1)
Noise	• Personnel will wear hearing protection above 85 decibels • Post warning signs in high noise level areas • Follow SOP for Hearing Conservation Program (No. 3-3)

Task 6 –Stabilize and sample berm soil

Principle Steps Use heavy equipment to mix screened soil with trisodium phosphate (TSP) as the stabilizing agent; sample stabilized soil stockpile.	
Potential Hazards Involved	**Hazard Control Measures**
Manual lifting / material handling hazards	• Make certain the load can be lifted safely • Do not lift more than 60 pounds • Use proper lifting techniques. Bend knees. Do not lift & twist • Follow OHM SOP for Personnel Lifting Safety (No. 2-3)
Slips, trips, and falls	• Maintain good housekeeping • Pick up tools and debris • Clean up spills immediately • Walk or climb only on equipment surfaces designed for personnel access • Follow OHM SOP for Slips, Trips and Falls (No. 2-4 & 2-9)
Heavy equipment traffic and use	• Heavy equipment must have fully functioning safety devices • Equipment operators are responsible for the safety of ground personnel • Do not suspend or swing load overhead of ground personnel • Do not carry or lift personnel except in an approved safety platform • Personnel shall be cognizant of the boom swing area and stay clear • To approach equipment, make eye contact/signal operator to cease activity and wait for operator acknowledgment • Follow OHM SOP for Equipment Inspection (No. 2-7)
Exposure to hazardous materials.	• Wear required PPE. • Follow TSP MSDS and this SHSP • Station eye wash and shower at TSP handing operations
Vehicle operating hazards	• Operators are responsible for the safe and legal operation of vehicles • Seat belt use is mandatory for operator and passengers • Personnel shall drive at posted speed limits or at safe speeds • Dump trucks must be equipped with back-up alarms or spotter must be provided • Follow OHM SOP for Vehicle Safety (No. 2-1)
Noise	• Personnel will wear hearing protection above 85 decibels • Post warning signs in high noise level areas • Follow SOP for Hearing Conservation Program (No. 3-3)

Task 7 –Berm restoration

Principle Steps Use heavy equipment to reform soil berms using stabilized soil and additional backfill.	
Potential Hazards Involved	**Hazard Control Measures**
Manual lifting / material handling hazards	• Make certain the load can be lifted safely • Do not lift more than 60 pounds • Use proper lifting techniques. Bend knees. Do not lift & twist • Follow OHM SOP for Personnel Lifting Safety (No. 2-3)
Slips, trips, and falls	• Maintain good housekeeping • Pick up tools and debris • Clean up spills immediately • Walk or climb only on equipment surfaces designed for personnel access • Follow OHM SOP for Slips, Trips and Falls (No. 2-4 & 2-9)
Heavy equipment traffic and use	• Heavy equipment must have fully functioning safety devices • Equipment operators are responsible for the safety of ground personnel • Do not suspend or swing load overhead of ground personnel • Do not carry or lift personnel except in an approved safety platform • Personnel shall be cognizant of the boom swing area and stay clear • To approach equipment, make eye contact/signal operator to cease activity and wait for operator acknowledgment • Follow OHM SOP for Equipment Inspection (No. 2-7)
Exposure to hazardous materials.	• Wear required PPE. • Follow this SHSP
Vehicle operating hazards	• Operators are responsible for the safe and legal operation of vehicles • Seat belt use is mandatory for operator and passengers • Personnel shall drive at posted speed limits or at safe speeds • Dump trucks must be equipped with back-up alarms or spotter must be provided • Follow OHM SOP for Vehicle Safety (No. 2-1)

Task 8 – Load-out, Transportation and Disposal

Principle Steps Use heavy equipment to load dump trucks with recycled lead and debris for transport and off-site disposal.	
Potential Hazards Involved	**Hazard Control Measures**
Heavy equipment traffic and use	• Heavy equipment must have fully functioning safety devices • Equipment operators are responsible for the safety of ground personnel • Do not suspend or swing load overhead of ground personnel • Do not carry or lift personnel except in an approved safety platform • Personnel shall be cognizant of the boom swing area and stay clear • To approach equipment, make eye contact/signal operator to cease activity and wait for operator acknowledgment • Follow OHM SOP for Equipment Inspection (No. 2-7)
Exposure to hazardous materials.	• Wear required PPE • Follow this SHSP
Vehicle operating hazards	• Operators are responsible for the safe and legal operation of vehicles • Seat belt use is mandatory for operator and passengers • Personnel shall drive at posted speed limits or at safe speeds • Dump trucks must be equipped with back-up alarms or spotter must be provided Follow • OHM SOP for Vehicle Safety (No. 2-1)
Noise	• Personnel will wear hearing protection above 85 decibels • Post warning signs in high noise level areas • Follow SOP for Hearing Conservation Program (No. 3-3)
Contact with overhead utilities	• Maintain 15-ft between heavy equipment and overhead utilities

Task 9 – Equipment decontamination

Principle Steps Decontaminate personnel. Decontaminate equipment. Collect and containerize decontamination water.	
Potential Hazards Involved	**Hazard Control Measures**
Manual lifting / material handling hazards	• Make certain the load can be lifted safely • Do not lift more than 60 pounds • Use proper lifting techniques. Bend knees. Do not lift & twist • Follow OHM SOP for Personnel Lifting Safety (No. 2-3)
Slips, trips, and falls	• Maintain good housekeeping • Pick up tools and debris • Clean up spills immediately • Walk or climb only on equipment surfaces designed for personnel access • Follow OHM SOP for Slips, Trips and Falls (No. 2-4 & 2-9)
Exposure to hazardous materials.	• Wear required PPE. Wear splash protection as appropriate • Follow this SHSP
Spills and splash hazards	• Wear splash protection as necessary to prevent dermal contact • Ensure spill cleanup equipment/material on hand/ready for use • Cleanup spills immediately • Follow this SHSP Section 3 and 5
Noise	• Personnel will wear hearing protection above 85 decibels • Post warning signs in high noise level areas • Follow SOP for Hearing Conservation Program (No. 3-3)
Pressure washing hazard	• Wear appropriate PPE • Only trained personnel will operate high pressure washer • Do not alter the equipment • Follow OHM SOP for Pressure Washing (No. 7-1)

Task 10 – Install bullet traps

Principle Steps Install 6 inch concrete slab for bullet traps; construct timber walls and baffles; install dust collector and electrical service.	
Potential Hazards Involved	**Hazard Control Measures**
Vehicle operating hazards	• Operators are responsible for the safe and legal operation of vehicles • Seat belt use is mandatory for operator and passengers • Personnel shall drive at posted speed limits or at safe speeds • Follow OHM SOP for Vehicle Safety (No. 2-1)
Manual lifting /	• Make certain the load can be lifted safely • Do not lift more than 60 pounds • Use proper lifting techniques. Bend knees. Do not lift & twist • Follow OHM SOP for Personnel Lifting Safety (No. 2-3)
Material handling hazards	• Use qualified operators to operate material handing equipment • Inspect materrial handling equipment prior to use • Secure loads to equipment
Slips, trips, and falls	• Maintain good housekeeping • Pick up tools and debris • Clean up spills immediately • Walk or climb only on equipment surfaces designed for personnel access • Follow OHM SOP for Slips, Trips and Falls (No. 2-4 & 2-9)
Heavy equipment traffic and use	• Equipment operators are responsible for the safety of ground personnel • To approach equipment, make eye contact/signal operator to cease activity • Do not carry or lift personnel except in an approved safety platform • Personnel shall be cognizant of the boom swing area and stay clear • Do not suspend or swing load overhead of ground personnel. • Heavy equipment must have fully functioning safety devices • Follow OHM SOP for Equipment Inspection (No. 2-7)
Electrical hazards	• Electrical work will be performed by approved electricians only • No electrical work should be done on an energized circuit • Test to ensure circuit is de-energized prior to start • Follow OHM SOP for Lockout/tag-out (No. 6-4) • Electrical hand tools must be grounded or double insulated • Temporary electrical connections must be GFI protected • Follow OHM SOP for Electrical Safety (No. 2-5)
Contact with utilities	• Maintain 15-ft between heavy equipment and overhead utilities
Portable power tool hazard	• All hand and power tools shall be in good repair • When working overhead, tools not in use will be secured • Do not throw or drop tools from heights • Follow OHM SOP for Equipment and Hand Tools (No. 7-7)
Chainsaw cutting hazard	• Provide training on use and the manufacturer's operations manual • Wear chainsaw chaps, full face shield, and hearing protection • Follow the chainsaw manufacturer's operating and safety procedures
Augering equipment	• Equipment must have fully functioning safety devices • Stay clear of rotating equipment • Wear close fitting clothes

Task 11 – Site restoration

Principle Steps Repair/replace concrete walks, seed and restore targets.	
Potential Hazards Involved	**Hazard Control Measures**
Vehicle operating hazards	• Operators are responsible for the safe and legal operation of vehicles • Seat belt use is mandatory for operator and passengers • Personnel shall drive at posted speed limits or at safe speeds • Follow OHM SOP for Vehicle Safety (No. 2-1)
Manual lifting / material handling hazards	• Make certain the load can be lifted safely • Do not lift more than 60 pounds • Use proper lifting techniques. Bend knees. Do not lift & twist • Follow OHM SOP for Personnel Lifting Safety (No. 2-3)
Slips, trips, and falls	• Maintain good housekeeping • Pick up tools and debris • Clean up spills immediately • Walk or climb only on equipment surfaces designed for personnel access • Follow OHM SOP for Slips, Trips and Falls (No. 2-4 & 2-9)
Heavy equipment traffic and use	• Equipment operators are responsible for the safety of ground personnel • To approach equipment, make eye contact/signal operator to cease activity • Do not carry or lift personnel except in an approved safety platform • Personnel shall be cognizant of the boom swing area and stay clear • Do not suspend or swing load overhead of ground personnel. • Heavy equipment must have fully functioning safety devices • Follow OHM SOP for Equipment Inspection (No. 2-7)
Exposure to hazardous materials.	• Wear required PPE. • Follow concrete MSDS and this SHSP
Noise	• Personnel will wear hearing protection above 85 decibels • Post warning signs in high noise level areas • Follow SOP for Hearing Conservation Program (No. 3-3)

Task 12 - Demobilization

Principle Steps Remove work zone fencing and decontamination facilities. Properly segregate and dispose of accumulated trash and PPE. Load and secure equipment and material to prevent shifting during transport.	
Potential Hazards Involved	**Hazard Control Measures**
Vehicle operating hazards	• Operators are responsible for the safe and legal operation of vehicles • Seat belt use is mandatory for operator and passengers • Personnel shall drive at posted speed limits or at safe speeds • Follow OHM SOP for Vehicle Safety (No. 2-1)
Manual lifting / material handling hazards	• Make certain the load can be lifted safely • Do not lift more than 60 pounds • Use proper lifting techniques. Bend knees. Do not lift & twist • Follow OHM SOP for Personnel Lifting Safety (No. 2-3)
Slips, trips, and falls	• Maintain good housekeeping • Pick up tools and debris • Clean up spills immediately • Walk or climb only on equipment surfaces designed for personnel access • Follow OHM SOP for Slips, Trips and Falls (No. 2-4 & 2-9)
Heavy equipment traffic and use	• Equipment operators are responsible for the safety of ground personnel • To approach equipment, make eye contact/signal operator to cease activity • Do not carry or lift personnel except in an approved safety platform • Personnel shall be cognizant of the boom swing area and stay clear • Do not suspend or swing load overhead of ground personnel. • Heavy equipment must have fully functioning safety devices • Follow OHM SOP for Equipment Inspection (No. 2-7)
Electrical hazards	• Electrical work will be performed by approved electricians only • No electrical work should be done on an energized circuit • Test to ensure circuit is de-energized prior to start • Follow OHM SOP for Lockout/tag-out (No. 6-4) • Electrical hand tools must be grounded or double insulated • Temporary electrical connections must be GFI protected • Follow OHM SOP for Electrical Safety (No. 2-5)
Contact with utilities	• Locate all buried utilities prior to subsurface activities • Maintain 15-ft between heavy equipment and overhead utilities
Portable power tool hazard	• All hand and power tools shall be in good repair • When working overhead, tools not in use will be secured • Do not throw or drop tools from heights • Follow OHM SOP for Equipment and Hand Tools (No. 7-7)

4.0 WORK AND SUPPORT AREAS

To prevent migration of contamination caused through tracking by personnel or equipment, work areas and personal protective equipment will be clearly specified prior to beginning operations. OHM has designated work areas or zones as suggested by the NIOSH/OSHA/ USCG/EPA'S document titled, "Occupational Safety and Health Guidance Manual for Hazardous Waste Site Activities." Each work area will be divided into three zones as follows:

- An Exclusion or "hot" Zone (EZ)
- A Contamination Reduction Zone (CRZ)
- A Support Zone (SZ)

4.1 EXCLUSION ZONE

The EZ is the area suspected of contamination and presents the greatest potential for worker exposure. Personnel entering the area must wear the mandated level of protection for that area. In certain instances, different levels of protection will be required depending on the tasks and monitoring performed within that zone.

4.2 CONTAMINATION REDUCTION ZONE

The CRZ or transition zone will be established between the EZ and SZ. In this area, personnel will begin the sequential decontamination process required to exit the EZ. To prevent off-site migration of contamination and for personnel accountability, all personnel will enter and exit the EZ through the CRZ.

4.3 SUPPORT ZONE

The SZ serves as a clean, control area. Operational support facilities are located within the SZ. Normal work clothing and support equipment are appropriate in this zone. Contaminated equipment or clothing will not be allowed in the SZ. The support facilities should be located upwind of site activities. There will be a clearly marked controlled access point from the SZ into the CRZ and EZ that is monitored closely by the SSO and the SS to ensure proper safety protocols are followed.

4.4 SITE CONTROL LOG

A log of all personnel visiting, entering or working on the site shall be maintained in the main office trailer location. The log will record the date, name, company or agency, and time entering or exiting the site.

No visitor will be allowed in the EZ without showing proof of training and medical certification. Visitors will supply their own boots and respiratory equipment, if required. Visitors will attend a site orientation given by the SSO and sign the HASP.

4.5 GENERAL

The following items are requirements to protect the health and safety of workers and will be discussed in the safety briefing prior to initiating work on the site.

- Eating, drinking, chewing gum or tobacco, smoking, or any practice that increases the probability of hand to mouth transfer and ingestion of contamination is prohibited in the EZ and CRZs.

- All personnel exiting the exclusion zone or the contamination reduction zone, must at a minimum, thoroughly wash their face and hands.

- A buddy system will be used. Hand signals will be established to maintain communication.

- During site operations, each worker will consider himself as a safety backup to his partner. Off-site personnel provide emergency assistance. All personnel will be aware of dangerous situations that may develop.

- Visual contact will be maintained between buddies on site when performing hazardous duties.

- No personnel will be admitted to the site without the proper safety equipment, training, and medical surveillance certification.

- All personnel must comply with established safety procedures. Any staff member who does not comply with safety policy, as established by the SSO or the SS, will be immediately dismissed from the site.

- Proper decontamination procedures must be followed before leaving the site.

- All employees and visitors must sign in and out of the site.

5.0 *PROTECTIVE EQUIPMENT*

This section addresses the various levels of personal protective equipment (PPE) which are or may be required at this job site. OHM personnel are trained in the use of all PPE utilized.

5.1 ANTICIPATED PROTECTION LEVELS

Task		Protection Level
Task 1	Mobilization and site preparation	D
Task 2	Pre-excavation field screening	C with Tyvek
Task 3	Clearing and grubbing	Modified D/C with Tyvek
Task 4	Excavate berm soil	C with Tyvek
Task 5	Screen berm soil	C with Tyvek
Task 6	Stabilize and sample berm soil	C with Tyvek
Task 7	Berm restoration	Modified D/C with Tyvek
Task 8	Transportation and disposal Loader operations Truck drivers remaining in truck when loading	C/Modified D with Tyvek D
Task 9	Equipment decontamination	C with PE Tyvek, face-shield, and hearing protection
Task 10	Install bullet traps Chainsaw operations	D D with face shield , hearing protection and chaps
Task 11	Site restoration	D
Task 12	Demobilization	D

Hearing protection will be required for all personnel whenever the noise level is above 85 dBa.

5.2 PROTECTION LEVEL DESCRIPTIONS

This sections lists the minimum requirements for each protection level. Modification to these requirements will be noted above.

5.2.1 Level D

Level D consists of the following:

- Safety glasses with side shields
- Hard hat

- Steel-toed work boots
- Work clothing as prescribed by weather

5.2.2 Modified Level D

Modified Level D consists of the following:

- Safety glasses with side shields
- Hard hat
- Steel-toed work boots
- Nitrile, neoprene, latex or PVC overboots
- Outer nitrile, neoprene, or PVC gloves over latex sample gloves
- Face shield (when projectiles or splashes pose a hazard)
- Tyvek coverall [Polyethylene-coated Tyveks required when workers have a potential to be exposed to contaminated liquids or sludges.]

5.2.3 Level C

Level C consists of the following:

- Full-face, air-purifying respirator with appropriate cartridges
- Hooded Tyvek Coveralls [Polyethylene- or saran-coated Tyveks required when workers have a potential to be exposed to contaminated liquids or sludges].
- Hard hat
- Steel-toed work boots
- Nitrile, neoprene, latex or PVC overboots
- Nitrile, neoprene, or PVC gloves over latex sample gloves
- Face shield (when projectiles or splashes pose a hazard)

5.3 AIR-PURIFYING RESPIRATORS

A NIOSH-approved full-face respirator with appropriate air-purifying cartridges will be used for Level C work.

5.4 RESPIRATOR CARTRIDGES

The crew members working in Level C will wear respirators equipped with air-purifying cartridges approved for the following contaminants.

- Organic vapors <1,000 ppm

- Chlorine gas <10 ppm
- Hydrogen chloride <50 ppm
- Sulfur dioxide <50 ppm
- Dusts, fumes and mists with a TWA <0.05 mg/m^3
- Asbestos-containing dusts and mists
- Radionuclides

5.5 CARTRIDGE CHANGES

All cartridges will be changed a minimum of once daily, or more frequently if personnel begin to experience increased inhalation resistance or breakthrough of a chemical warning property. Cartridges will be labeled with the date service began.

5.6 INSPECTION AND CLEANING

Respirators are checked periodically by a qualified individual and inspected before each use by the wearer. All respirators and associated equipment will be decontaminated and hygienically cleaned after each use.

5.7 FIT TESTING

All personnel required to wear an air-purifying respirator as part of their employment will be fit-tested at the time of assignment and a minimum of annually thereafter. The test will use isoamyl acetate or irritant smoke. The fit test must be for the style and size of the respirator to be used.

5.8 FACIAL HAIR

Personnel who have facial hair which interferes with the respirator's sealing surface will not be permitted to wear a respirator and will not be permitted to work in areas requiring respirator use.

5.9 CORRECTIVE LENSES

Normal eyeglasses cannot be worn under full-face respirators because the temple bars interfere with the respirator's sealing surfaces. For workers requiring corrective lenses, special spectacles designed for use with respirators will be provided.

5.10 CONTACT LENSES

Contact lenses will not be worn with any type of respirator.

5.11 MEDICAL CERTIFICATION

Only workers who have been certified by a physician as being physically capable of respirator usage will be issued a respirator. Personnel unable to pass a respiratory fit test or without medical clearance for respirator use will not be permitted to enter or work in areas on site that require respiratory protection. Employees receive a written physicians opinion that they are fit for general hazardous waste operations as per 29 CFR 1910.120(f)(7).

5.12 SITE-SPECIFIC RESPIRATORY PROTECTION PROGRAM

The primary objective of respiratory protection is to prevent employee exposure to atmospheric contamination. When engineering measures to control contamination are not feasible, or while they are being implemented, personal respiratory protective devices will be used.

The criteria for determining respirator need have been evaluated based on the site contaminants and expected levels of protection are outlined in Section 5.1. Air monitoring will be conducted to confirm that respiratory protection levels are adequate (Section 7.0). All respirator users are OSHA trained in proper respirator use and maintenance. The SS and SSO will observe workers during respirator use for signs of stress. The SS, CIH, and SSO will also evaluate this HASP periodically to determine its continued effectiveness with regard to respiratory protection. All persons assigned to use respirators will have medical clearance to do so.

6.0 DECONTAMINATION PROCEDURES

This section describes the procedures necessary to ensure that both personnel and equipment are free from contamination when they leave the work site.

6.1 PERSONNEL DECONTAMINATION

Decontamination procedures will ensure that material which workers may have contacted in the EZ does not result in personal exposure and is not spread to clean areas of the site. This sequence describes the general decontamination procedure. The specific stages will vary depending on the work area, the task, the protection level, etc.

1. Go to end of EZ
2. Wash outer boots and gloves in detergent solution
3. Rinse outer boots and gloves in water
4. Remove outer boots and let dry
5. Remove outer gloves and let dry
6. Cross into CRZ
7. Remove SCBA or hip pack (Level B)
8. Remove first pair sample gloves
9. Remove outer saran or tyvek
10. Remove and wash respirator
11. Rinse respirator and hang to dry
12. Remove second pair sample gloves and discard

6.1.1 Suspected Contamination

Any employee suspected of sustaining skin contact with chemical materials will first use the emergency shower. Following a thorough drenching, the worker will proceed to the decontamination facility. Here the worker will remove clothing, shower, don clean clothing, and immediately be taken to the first-aid station. Medical attention will be provided as determined by the degree of injury.

6.1.2 Personal Hygiene

Before any eating, smoking, or drinking, personnel will wash hands, arms, neck and face. **In accordance with OSHA's Lead standard contained in 29CFR1926.62 site personnel exposed to airborne lead concentration in excess of the Permissible Exposure Level (PEL) of .05 mg/m3 for an 8-hour TWA will be required to shower daily prior to exiting the site. Representative lead air sampling and analysis will be performed during berm soil excavation, screening, stabilization and restoration activities. Upon receipt of personnel lead exposure analysis at or grater than the PEL, site personnel will be required to shower daily prior to leaving the site.**

Also, eye wash facilities and emergency showers will be provided at personnel decontamination facilities and at the water treatment system where hazardous chemicals are handled.

6.2 EQUIPMENT DECONTAMINATION

All contaminated equipment will be decontaminated before leaving the site. Decontamination procedures will vary depending upon the contaminant involved, but may include sweeping, wiping, scraping, hosing, or steaming the exterior of the equipment. Personnel performing this task will wear the proper PPE as prescribed by the SSO.

6.3 DISPOSAL

All decontamination liquids and disposable clothing will be collected, containerized and treated as contaminated waste, unless determined otherwise by accepted testing methods. Wastes will be disposed of according to state and federal regulations.

7.0 AIR MONITORING

Air monitoring will be conducted in order to determine airborne contamination levels. This ensures that respiratory protection is adequate to protect personnel against the chemicals that are encountered. The following air monitoring efforts will be used at this site. Additional air monitoring may be conducted at the discretion of the SSO.

The following chart describes the air monitoring required and appropriate action levels.

Monitoring Device	**Monitoring Frequency**	**Action Level**	**Action**
LEL/O_2 meters (work area)	At start-up, four times daily, when excavating	>10% LEL <20.8%O_2	Stop operations; allow vapors to vent <10% before continuing
PID/OVA (Breathing Zone)	At start-up, four times daily for Tasks 2 through 8	> 1 ppm > 50 ppm for 5 min.	Upgrade to Level C Shutdown operations, allow vapors to dissipate to <10 ppm before continuing
Mini-RAM Dust Meter(Breathing Zone)	At start-up and four times daily for Tasks 2 through 8	>.50 mg/m3 for 5 min. >0.05 mg/M^3 at EZ perimeter for 5 min.	Level C if in Modified D Institutes dust control measures. Modify work task as appropriate
Personnel lead air sampling	Representative sampling during berm soil excavation, screening stabilization and loadout	>.05 mg/m3 for 8-hr. TWA	Level C

7.1 LOWER EXPLOSIVE LIMIT/OXYGEN (LEL/O2) METER

Prior to entering a confined-space area or performing hot work involving welding, cutting, or other high heat-producing operations where flammable or combustible vapors may be present, LEL/O_2 measurements will be taken.

7.2 PHOTOIONIZATION DETECTOR (PID)

A PID will be used to monitor total ionizable organic content of the ambient air. A PID will prove useful as a direct reading instrument to aid in determining if respiratory protection needs to be upgraded and to define the EZ.

For known contaminants only, to determine a protection level from PID data, the SSO will multiply the TLV of the known compound by 25. This will be the limit for Level C protection for that compound. If PID readings exceed 25 times the TLV, Level B protection will be required. Also, regardless of the TLV, a PID reading of 1,000 ppm or more will indicate that the GMC-H cartridges may become overloaded and will necessitate Level B protection. (Note: PID readings do not always indicate the actual air concentration of a compound. Consult the manual, HNU, or the CIH for clarification.)

The SSO will take measurements before operations begin in an area to determine the amount of organic compounds naturally occurring in the air. This is referred to as a background level.

Levels of volatile organic compounds will be measured in the air at active work sites once every hour and at the support zone once every hour when levels are detected above background in the exclusion zone. If levels exceed background at any time in the support zone, work in the exclusion zone will cease and corrective actions will be taken, e.g., cover soil with polyethylene sheeting. Work will not resume until levels reach background in the support zone.

7.3 REAL-TIME AEROSOL MONITOR (MINIRAM)

A real-time aerosol monitor (miniram) will be used to measure airborne particulate in personnel breathing zones and site work area locations. A breathing zone action level has been specified that requires upgrading to Level C protection based on sustained (5-minute average) miniram results. The miniram will be used to monitor personnel breathing zone when wearing Modified Level D protection and to determine when an upgrade to Level C is warranted.

7.4 AIR SAMPLING AND ANALYSIS

Additional personal air samples will be collected in personnel breathing zones if the direct reading instruments indicate exposure in order to document that the appropriate level of protection was worn during remedial actions on-site. Air samples will be collected on personnel with the greatest potential for exposure during each major project phase.

Air samples will be analyzed by an American Industrial Hygiene Association-accredited laboratory. Air samples will be collected and analyzed in accordance with the specified NIOSH method for inorganic lead. Representative lead air sampling and analysis will be performed during berm soil excavation, screening, stabilization and restoration activities.

7.5 AIR MONITORING LOG

The SSO will ensure that all air-monitoring data is logged into a monitoring notebook. Data will include all information identified in Procedure 12 of the ER Safety Procedures Manual. The Project CIH will periodically review this data

7.6 CALIBRATION REQUIREMENTS

The PID, LEL/O_2 meter, MiniRAM and sampling pumps required with fixed-media air sampling will be calibrated daily prior to and after each use. A separate log will be kept detailing date, time, span gas, or other standard, and name of person performing the calibration.

7.7 AIR MONITORING RESULTS

Air monitoring results will be posted for personnel inspection, and will be discussed during morning safety meetings.

8.0 EMERGENCY RESPONSE

8.1 PRE-EMERGENCY PLANNING

Prior to engaging in construction/remediation activities at the site, OHM will plan for possible emergency situations and have available adequate supplies and manpower to respond. The PM will coordinate this plan with the NOSC/NOSCDR prior to commencing work. In addition site personnel will receive training during the site orientation concerning proper emergency response procedures. This training will include review of the elements of this plan and all action procedures described herein.

The following situations would warrant implementation of the Emergency Response and Contingency Plan (ERCP):

Fire/Explosion	• The potential for human injury exists • Toxic fumes or vapors are released • The fire could spread on site or off site and possibly ignite other flammable materials or cause heat-induced explosions • The use of water and/or chemical fire suppressants could result in contaminated run-off • An imminent danger of explosion exists
Spill or Release of Hazardous Materials	• The spill could result in the release of flammable liquids or vapors, thus causing a fire or gas explosion hazard • The spill could cause the release of toxic liquids or fumes in sufficient quantities or in a manner that is hazardous to or could endanger human health
Spill or Release of High Temperature Liquid or Vapor	• The spill can be contained on site, but the potential exists for ground-water contamination • The spill cannot be contained on site, resulting in off-site soil contamination and/or ground-water or surface water pollution • The spill quantity is greater than the reportable quantity limit for the material
Natural Disaster	• A rain storm exceeds the flash flood level • The facility is in a projected tornado path or a tornado has damaged facility property • Severe wind gusts are forecasted or have occurred and have caused damage to the facility
Medical Emergency	• Overexposure to hazardous materials • Trauma injuries (broken bones, severe lacerations/bleeding, burns) • Eye/skin contact with hazardous materials • Loss of consciousness • Heat stress (Heat stroke) • Cold stress (Hypothermia) • Heart attack • Respiratory failure • Allergic reaction

The following measures will be taken to assure the availability of adequate equipment and manpower resources:

- Sufficient equipment and materials will be kept on site and dedicated for emergencies only. The inventory will be replenished after each use.

- On-site emergency responders will be current in regards to training and medical surveillance programs. Copies of all applicable certificates will be kept on file for on-site personnel required to respond.

- It will be the responsibility of the emergency coordinator to brief the on-site response team on anticipated hazards at the site. The emergency coordinator shall also be responsible for anticipating and requesting equipment that will be needed for response activities.

- Emergency response activities will be coordinated with the Local Emergency Planning Committee (LEPC) in compliance with SARA Title III requirements.

Communications will be established prior to commencement of any activities at the remediation site. Communication will be established so that all responders on site have availability to all pertinent information to allow them to conduct their activities in a safe and healthful manner. The primary communication device will be two-way radios. Air horns may be used to alert personnel of emergency conditions. A telephone will be located at the command post to summon assistance in an emergency.

Primary communication with local responders in the event of an emergency will be accomplished using commercial telephone lines.

8.2 EMERGENCY RECOGNITION AND PREVENTION

Because unrecognized hazards may result in emergency incidents, it will be the responsibility of the Site Supervisor and Site Safety Officer, through daily site inspections and employee feedback (Safety Observation Program, daily safety meetings, and activity hazard analyses) to recognize and identify all hazards that are found at the site. These may include:

Chemical Hazards	• Materials at the site • Materials brought to the site
Physical Hazards	• Fire/explosion • Slip/trip/fall • Electrocution • Confined space • IDLH atmospheres • Excessive noise
Mechanical Hazards	• Heavy equipment • Stored energy system • Pinch points • Electrical equipment • Vehicle traffic
Environmental Hazards	• Electrical Storms • High winds • Heavy Rain/Snow • Temperature Extremes (Heat/Cold Stress) • Poisonous Plants/Animals

Once a hazard has been recognized, the Site Supervisor and/or the SSO will take immediate action to prevent the hazard from becoming an emergency. This may be accomplished by the following:

- Daily safety meeting
- Task-specific training prior to commencement of activity
- Lockout/tagout
- Personal Protective Equipment (PPE) selection/use
- Written and approved permits for hot work, confined space
- Trenching/shoring procedure
- Air monitoring
- Following all OHM standard operating procedures
- Practice drills for fire, medical emergency, and hazardous substances spills

Table 8.1 **Emergency Telephone Numbers**	
Local Agencies All services	
Police Dept.	911 (on-base) (910) 451-3855 (off-base)
Fire Department	911 (on-base)
Ambulance	911 (on-base) (910) 455-9119 (off-base)
Hospital	
Onslow County Hospital (off-base)	(910) 577-2240 (off-base)
USMC Base Hospital (on base)	(910) 450-4840 (on-base)
NOSC/NOSCDR	(904) 772-5216
Regional Poison Control Center	800-672-1697
State Agencies	
State Highway Patrol	800-441-6127
Federal Agencies	
EPA Region Branch Response Center	(404) 347-3931
National Response Center	800-424-8802
Agency for Toxic Substances and Disease Registry	(404) 639-0615 (24 HR)
Navy ROICC / NTR	
National Response Center	800-424-8802
Project Manager	
Jim Dunn	(770) 734-8072
Director, Health and Safety, Angelo Liberatore, CIH	(770) 453-7671
OHM Corporation (24 hour)	800-537-9540
Note:	
Additional Phone Nos's in Section 2.0 this HASP	

8.3 PERSONNEL ROLES, LINES OF AUTHORITY, AND COMMUNICATIONS

This section of the ERCP describes the various roles, responsibilities, and communication procedures that will be followed by personnel involved in emergency responses.

The primary emergency coordinator for this site is the Site Supervisor. In the event an emergency occurs and the emergency coordinator is not on site, the Site Safety Officer or the highest ranking employee on site will serve as the emergency coordinator until he arrives. The emergency coordinator will determine the nature of the emergency and take appropriate action as defined by this ERCP.

The emergency coordinator will implement the ERCP immediately as required. The decision to implement the plan will depend upon whether the actual incident threatens human health or the environment. Immediately after being notified of an emergency incident, the emergency coordinator or his designee will evaluate the situation to determine the appropriate action.

8.3.1 Responsibilities and Duties

This section describes the responsibilities and duties assigned to the emergency coordinator.

It is recognized that the structure of the "Incident Command System" will change as additional response organizations are added. OHM will follow procedures as directed by the fire department, LEPC, State and Federal Agencies as required. OHM will defer to the local Fire Department chief to assume the role of Incident Commander upon arriving on site. Additional on-site personnel may be added to the Site Emergency Response Team as required to respond effectively.

8.3.2 On-site Emergency Coordinator Duties

The on-site emergency coordinator is responsible for implementing and directing the emergency procedures. All emergency personnel and their communications will be coordinated through the emergency coordinator. Specific duties are as follows:

- Identify the source and character of the incident, type and quantity of any release. Assess possible hazards to human health or the environment that may result directly from the problem or its control.

- Discontinue operations in the vicinity of the incident if necessary to ensure that fires, explosions, or spills do not recur or spread to other parts of the site. While operations are dormant, monitor for leaks, pressure build-up, gas generation, or ruptures in valves, pipes, or other equipment, where appropriate.

- Notify the NOSC/NOSCDR if outside emergency response help is necessary to control the incident. Table 8.1 provides telephone numbers for emergency assistance.

- Direct on-site personnel to control the incident until, if necessary, outside help arrives.

- Ensure that the building or area where the incident occurred and the surrounding area are evacuated and shut off possible ignition sources, if appropriate. The Emergency Response Team is responsible for directing site personnel such that they avoid the area of the incident and leave emergency control procedures unobstructed.

- If fire or explosion is involved, notify Base Fire Department.

- Notify LANTDIV ROICC

- Notify OHM Project Manager

- Have protected personnel, in appropriate PPE, on standby for rescue.

If the incident may threaten human health or the environment outside of the site, the emergency coordinator should immediately determine whether evacuation of area outside of the site may be necessary and, if so, notify the Police Department and the Office of Emergency Management.

When required (as determined by the NOSC/NOSCDR), notify the National Response Center. The following information should be provided to the National Response Center:

- Name and telephone number
- Name and address of facility
- Time and type of incident
- Name and quantity of materials involved, if known
- Extent of injuries
- Possible hazards to human health or the environment outside of the facility.

The emergency telephone number for the National Response Center is 800-424-8802.

If hazardous waste has been released or produced through control of the incident, ensure that:

- Waste is collected and contained.

- Containers of waste are removed or isolated from the immediate site of the emergency.

- Treatment or storage of the recovered waste, contaminated soil or surface water, or any other material that results from the incident or its control is provided.

- Ensure that no waste that is incompatible with released material is treated or stored in the facility until cleanup procedures are completed.

- Ensure that all emergency equipment used is decontaminated, recharged, and fit for its intended use before operations are resumed.

- Notify the USEPA Regional Administrator that cleanup procedures have been completed and that all emergency equipment is fit for its intended use before resuming operations in the affected area of the facility. The USEPA Regional Administrator's telephone number is included in the Emergency Contacts.

- Record time, date, and details of the incident, and submit a written report to the USEPA Regional Administrator. Report is due to USEPA within 15 days of the incident.

- Perform post incident evaluation and response critique and submit a written report to the Regional Health and Safety Director within 30 days of the incident conclusion.

8.4 SAFE DISTANCES AND PLACES OF REFUGE

The emergency coordinator for all activities will be the SS. No single recommendation can be made for evacuation or safe distances because of the wide variety of emergencies which could occur. Safe distances can only be determined at the time of an emergency based on a combination of site and incident-specific criteria. However, the following measures are established to serve as general guidelines.

In the event of minor hazardous materials releases (small spills of low toxicity), workers in the affected area will report initially to the contamination reduction zone. Small spills or leaks (generally less than 55 gallons) will require initial evacuation of at least 50 feet in all directions to allow for cleanup and to prevent exposure. After initial assessment of the extent of the release and potential hazards, the emergency coordinator or his designee will determine the specific boundaries for evacuation. Appropriate steps such as caution tape, rope, traffic cones, barricades, or personal monitors will be used to secure the boundaries.

I the event of a major hazardous material release (large spills of high toxicity/greater than 55 gallons), workers will be evacuated from the building/site. Workers will assemble at the entrance to the site for a head count by their foremen and to await further instruction.

If an incident may threaten the health or safety of the surrounding community, the public will be informed and, if necessary, evacuated from the area. The emergency coordinator, or his designee will inform the proper agencies in the event that this is necessary. Telephone numbers are listed in Table 8.1.

Places of refuge will be established prior to the commencement of activities. These areas must be identified for the following incidents:

- Chemical release
- Fire/explosion
- Power loss
- Medical emergency
- Hazardous weather

In general, evacuation will be made to the crew trailers, unless the emergency coordinator determines otherwise. It is the responsibility of the emergency coordinator to determine when it is necessary to evacuate personnel to off-site locations.

In the event of an emergency evacuation, all the employees will gather at the entrance to the site until a head count establishes that all are present and accounted for. No one is to leave the site without notifying the emergency coordinator.

8.5 EVACUATION ROUTES AND PROCEDURES

All emergencies require prompt and deliberate action. In the event of an emergency, it will be necessary to follow an established set of procedures. Such established procedures will be followed as closely as possible. However, in specific emergency situations, the emergency coordinator may deviate from the procedures to provide a more effective plan for bringing the situation under control. The emergency coordinator is responsible for determining which situations require site evacuation.

8.5.1 Evacuation Signals and Routes

Two-way radio communication and an air horn will be used to notify employees of the necessity to evacuate an area or building involved in a release/spill of a hazardous material. Each crew supervisor will have a two way radio. A base station will be installed in the OHM office trailer to monitor for emergencies. Total site evacuation will be initiated only by the emergency coordinator; however, in his absence, decision to preserve the health and safety of employees will take precedence. Evacuation routes will be posted in each outside work area. Signs inside buildings will be posted on walls or other structural element of a building. Periodic drills will be conducted to familiarize each employee with the proper routes and procedures.

8.5.2 Evacuation Procedures

In the event evacuation is necessary, the following actions will be taken:

- The emergency signal will be activated.
- No further entry of visitors, contractors, or trucks will be permitted. Vehicle traffic within the site will cease in order to allow safe exit of personnel and movement of emergency equipment.
- Shut off all machinery if safe to do so.
- ALL on-site personnel, visitors, and contractors in the support zone will assemble at the entrance to the site for a head count and await further instruction from the emergency coordinator.
- ALL persons in the exclusion zone and contamination reduction zone will be accounted for by their immediate crew leaders (e.g., foreman). Leaders will determine the safest exits for employees and will also choose an alternate exit if the first choice is inaccessible.

- During exit, the crew leader should try to keep the group together. Immediately upon exit, the crew leader will account for all employees in his crew.

- Upon completion of the head count, the crew leader will provide the information to the emergency coordinator.

- Contract personnel and visitors will also be accounted for.

- The names of emergency response team members involved will be reported to the emergency spill control coordinator.

- A final tally of persons will be made by the emergency coordinator or designee. No attempt to find persons not accounted for will involve endangering lives of OHM or other employees by reentry into emergency areas.

- In all questions of accountability, immediate crew leaders will be held responsible for those persons reporting to them. Visitors will be the responsibility of those employees they are seeing. Contractors and truck drivers are the responsibility of the Site Supervisor. The security guard will aid in accounting for visitors, contractors, and truckers by reference to sign-in sheets available from the guard shack.

- Personnel will be assigned by the emergency coordinator to be available at the main gate to direct and brief emergency responders.

- Reentry into the site will be made only after clearance is given by the emergency coordinator. At his direction, a signal or other notification will be given for reentry into the facility.

- Drills will be held periodically to practice all of these procedures and will be treated with the same seriousness as an actual emergency.

8.6 EMERGENCY SPILL RESPONSE PROCEDURES AND EQUIPMENT

In the event of an emergency involving a hazardous material spill or release, the following general procedures will be used for rapid and safe response and control of the situation. Emergency contacts found in Table 8.1 provide a quick reference guide to follow in the event of a major spill.

8.6.1 Notification Procedures

If an employee discovers a chemical spill or process upset resulting in a vapor or material release, he or she will immediately notify the on-site emergency coordinator.

The on-site Emergency Coordinator will obtain information pertaining to the following:

- The material spilled or released.
- Location of the release or spillage of hazardous material.
- An estimate of quantity released and the rate at which it is being released.
- The direction in which the spill, vapor or smoke release is heading.
- Any injuries involved.
- Fire and/or explosion or possibility of these events.
- The area and materials involved and the intensity of the fire or explosion.

This information will help the on-site emergency coordinator to assess the magnitude and potential seriousness of the spill or release.

8.6.2 Procedure for Containing/Collecting Spills

The initial response to any spill or discharge will be to protect human health and safety, and then the environment. Identification, containment, treatment, and disposal assessment will be the secondary response.

If for some reason a chemical spill is not contained within a dike or sump area, an area of isolation will be established around the spill. The size of the area will generally depend on the size of the spill and the materials involved. If the spill is large (greater than 55 gallons) and involves a tank or a pipeline rupture, an initial isolation of at least 100 ft. in all directions will be used. Small spills (less than or equal to 55 gallons) or leaks from a tank or pipe will require evacuation of at least 50 ft. in all directions to allow cleanup and repair and to prevent exposure. When any spill occurs, only those persons involved in overseeing or performing emergency operations will be allowed within the designated hazard area. If possible the area will be roped or otherwise blocked off.

If the spill results in the formation of a toxic vapor cloud (by reaction with surrounding materials or by outbreak of fire) and its release (due to high vapor pressures under ambient conditions), further evacuation will be enforced. In general an area at least 500 feet wide and 1,000 feet long will be evacuated downwind if volatile materials are spilled. (Consult the DOT Emergency Response Guide for isolation distances for listed hazardous materials.)

If an incident may threaten the health or safety of the surrounding community, the public will be informed and possibly evacuated from the area. The on-site emergency coordinator will inform the proper agencies in the event this is necessary. (Refer to Table 8.1)

As called for in regulations developed under the Comprehensive Environmental Response Compensation Liability Act of 1980 (Superfund), OHM's practice is to report a spill of a pound or more of any hazardous material for which a reportable quantity has not been established and which is listed under the Solid Waste Disposal Act, Clean Air Act, Clean Water Act, or TSCA. OHM also follows the same practice for any substances not listed in the Acts noted above but which can be classified as a hazardous waste under RCRA.

Clean up personnel will take the following measures:

- Make sure all unnecessary persons are removed from the hazard area.
- Put on protective clothing and equipment.
- If a flammable material is involved, remove all ignition sources, and use spark and explosion proof equipment for recovery of material.
- Remove all surrounding materials that could be especially reactive with materials in the waste. Determine the major components in the waste at the time of the spill.
- If wastes reach a storm sewer, try to dam the outfall by using sand, earth, sandbags, etc. If this is done, pump this material out into a temporary holding tank or drums as soon as possible.
- Place all small quantities of recovered liquid wastes (55 gallons or less) and contaminated soil into drums for incineration or removal to an approved disposal site.
- Spray the spill area with foam, if available, if volatile emissions may occur.
- Apply appropriate spill control media (e.g. clay, sand, lime, etc.) to absorb discharged liquids.
- For large spills, establish diking around leading edge of spill using booms, sand, clay or other appropriate material. If possible, use diaphragm pump to transfer discharged liquid to drums or holding tank.

8.6.3 Emergency Response Equipment

The following equipment will be staged in the support zone and throughout the site, as needed, to provide for safety and first aid during emergency responses:

- ABC-type fire extinguisher
- First-aid kit, industrial size
- Eyewash/safety shower (This equipment will be in conformance with ANSI Z358.1-1990.)
- Emergency oxygen unit
- Emergency signal horn
- Self contained breathing apparatus (two)
- Stretcher/backboard

In addition to the equipment listed above, OHM maintains direct reading instrumentation that may be used in emergency situations to assess the degree of environmental hazard. This equipment will only be used by the Site Safety Officer or other specially trained personnel.

This equipment will be stored, charged and ready for immediate use in evaluating hazardous chemical concentrations. The equipment will be located at the OHM office trailer.

EQUIPMENT NAME	*APPLICATION*
Portable H-NU Photoionization Meter	Measures selected inorganic and organic chemical concentrations
MSA Oxygen and Combustible Gas Meter	Measures oxygen and combustible gas levels
Draeger Detector Tubes	Assorted detector tubes to measure specific chemical concentrations

8.6.4 Personal Protective Equipment

A supply of two (minimum) SCBAs will be located in the support zone for use in emergency response to hazardous materials releases. They will be inspected at least monthly, according to OSHA requirements. In addition, all emergency response personnel will have respirators available for use with cartridge selection determined by the Site Safety Officer based on the results of direct reading instruments. Emergency response personnel will also be provided with protective clothing as warranted by the nature of the hazardous material and as directed by the Site Safety Officer. All OHM personnel who may be expected to wear SCBAs are trained at assignment and annually thereafter on the proper use and maintenance of SCBAs and airline respirators.

8.6.5 Emergency Spill Response Clean-Up Materials and Equipment

A sufficient supply of appropriate emergency response clean-up and personal protective equipment will be inventoried and inspected, visually, on a weekly basis.

The materials listed below will be kept on site for spill control, depending on the types of hazardous materials present on site. The majority of this material will be located in the support zone, in a supply trailer or storage area. Small amounts will be placed on pallets and located in the active work areas.

- Sand or clay to solidify/absorb liquid spills.
- Lime (calcium oxide), soda ash (sodium carbonate), or baking soda (sodium bicarbonate) for neutralizing acid (pH <7) spills.
- Activated charcoal (carbon) to adsorb organic solvents (hydrocarbons) and to reduce flammable vapors.
- Citric acid for neutralizing caustic (pH >7) spills.
- Vapor-suppressing foam, if required by the Client, for controlling the release of volatile organic compounds.

- Appropriate solvents e.g. CITRIKLEEN, for decontamination of structures or equipment.

The following equipment will be kept on site and dedicated for spill cleanup:

- Plastic shovels for recovering corrosive and flammable materials.
- Sausage-shaped absorbent booms for diking liquid spills, drains, or sewers.
- Sorbent sheets (diapers) for absorbing liquid spills.
- Overpack drums for containerizing leaking drums.
- 55-gallon open-top drums for containerization of waste materials.

*NOTE: All contaminated soils, absorbent materials, solvents and other materials resulting from the clean-up of spilled or discharged substances shall be properly stored, labeled, and disposed of off-site.

8.7 EMERGENCY CONTINGENCY PLAN

This section of the ERCP details the contingency measures OHM will take to prepare for and respond to fires, explosions, spills and releases of hazardous materials, hazardous weather, and medical emergencies.

8.7.1 Medical Emergency Contingency Measures

The procedures listed below will be used to respond to medical emergencies. The SSO will contact the local hospital and inform them of the site hazards and potential emergency situations. A minimum of two First-Aid/CPR trained personnel will be maintained on site. All OHM first aid and CPR Responders have received training as required by 29 CFR 1910.1030 Bloodborne Pathogen Standard. A copy of the OHM exposure control plan may be obtained from the Site Safety Officer or Regional Health and Safety Director.

8.7.1.1 Response

The nearest workers will immediately assist a person who shows signs of medical distress or who is involved in an accident. The crew foreman will be summoned.

The crew foreman will immediately make radio contact with the on-site emergency coordinator to alert him of a medical emergency situation. The foreman will advise the following information:

- Location of the victim at the work site
- Nature of the emergency
- Whether the victim is conscious
- Specific conditions contributing to the emergency, if known

The Emergency Coordinator will notify the Site Safety Officer. The following actions will then be taken depending on the severity of the incident:

Life-Threatening Incident
If an apparent life-threatening condition exists, the crew foreman will inform the emergency coordinator by radio, and the local Emergency Response Services (EMS) will be immediately called. An on-site person will be appointed who will meet the EMS and have him/her quickly taken to the victim. Any injury within the EZ will be evacuated by OHM personnel to a clean area for treatment by EMS personnel. No one will be able to enter the EZ without showing proof of training, medical surveillance and site orientation.

Non Life-Threatening Incident
If it is determined that no threat to life is present, the Site Safety Officer will direct the injured person through decontamination procedures (see below) appropriate to the nature of the illness or accident. Appropriate first aid or medical attention will then be administered.

> *NOTE: The area surrounding an accident site must not be disturbed until the scene has been cleared by the Site Safety Officer.

Any personnel requiring emergency medical attention will be evacuated from exclusion and contamination reduction zones if doing so would not endanger the life of the injured person or otherwise aggravate the injury. Personnel will not enter the area to attempt a rescue if their own lives would be threatened. The decision whether or not to decontaminate a victim prior to evacuation is based on the type and severity of the illness or injury and the nature of the contaminant. For some emergency victims, immediate decontamination may be an essential part of life-saving first aid. For others, decontamination may aggravate the injury or delay life-saving first aid. Decontamination will be performed if it does not interfere with essential treatment.

If decontamination can be performed, observe the following procedures:

- Wash external clothing and cut it away.

If decontamination cannot be performed, observe the following procedures:

- Wrap the victim in blankets or plastic to reduce contamination of other personnel.
- Alert emergency and off-site medical personnel to potential contamination, instruct them about specific decontamination procedures.
- Send site personnel familiar with the incident and chemical safety information, e.g. MSDS, with the affected person.

All injuries, no matter how small, will be reported to the SSO or the Site Supervisor. An accident/injury/illness report will be completely and properly filled out and submitted to the

Regional Health and Safety Director/Project CIH, in accordance with OHM's reporting procedures.

A list of emergency telephone numbers is given in Table 8.1.

8.7.1.2 Notification

The following personnel/agencies will be notified in the event of a medical emergency:

- Local Fire Department or EMS
- On-site Emergency Coordinator
- Workers in the affected areas
- Client Representative

8.7.1.3 Directions To Hospital

Written directions to the hospital and a map will be posted in all trailers in the staging area. Directions to the hospital are as follows:

ON-BASE:

1. From the site, proceed to Holcomb Blvd. and turn north.
2. Proceed north on Holcomb Blvd. and turn left on Brewster Street.
3. Base hospital is approximately ½ mile ahead on right.
4. Follow signs to the emergency room entrance.

OFF-BASE

1. From the site, proceed to Holcomb Blvd. and turn north.
2. Proceed north on Holcomb Blvd. and exit MCB Camp Lejeune through the main gate.
3. Follow Highway 24 west (approximately 2.4 miles) to Western Blvd. and turn right (north).
4. Continue on Western Blvd. (approximately 1.5 miles) to the first stoplight and the hospital is on the left side of the street.
5. Follow signs to the emergency room entrance.

A map depicting the route to the Onslow County Memorial Hospital and the Base Naval Hospital will be posted in each trailer.

8.7.2 Fire Contingency Measures

OHM personnel and subcontractors are not trained professional firefighters. Therefore, if there is any doubt that a fire can be quickly contained and extinguished, personnel will notify the emergency coordinator by radio and vacate the structure or area. The emergency coordinator will immediately notify the local Fire Department.

The following procedures will be used to prevent the possibility of fires and resulting injuries:

- Sources of ignition will be kept away from where flammable materials are handled or stored.

- The air will be monitored for explosivity before and during hot work and periodically where flammable materials are present. Hot work permits will be required for all such work.

- "No smoking" signs will be conspicuously posted in areas where flammable materials are present.

- Fire extinguishers will be placed in all areas where a fire hazard may exist.

- Before workers begin operations in an area the foreman will give instruction on egress procedures and assembly points. Egress routes will be posted in work areas and exit points clearly marked.

The following procedures will be used in the event of a fire:

- Anyone who sees a fire will notify their supervisor who will then contact the Emergency Coordinator by radio. The emergency coordinator will activate the emergency air horns and contact the local Fire Department.

- When the emergency siren sounds, workers will disconnect electrical equipment in use (if possible) and proceed to the nearest fire exit.

- Work crews will be comprised of pairs of workers (buddy system) who join each other immediately after hearing the fire alarm and remain together throughout the emergency. Workers will assemble at a predetermined rally point for a head count.

- When a small fire has been extinguished by a worker, the emergency coordinator will be notified.

8.7.3 Hazardous Weather Contingency Measures

Operations will not be started or continued when the following hazardous weather conditions are present:

- Lightning
- Heavy Rains/Snow
- High Winds

8.7.3.1 Response

- Excavation/soil stock piles will be covered with plastic liner.

- All equipment will be shut down and secured to prevent damage.

- Personnel will be moved to safe refuge, initially crew trailers. The emergency coordinator will determine when it is necessary to evacuate personnel to off-site locations and will coordinate efforts with fire, police and other agencies.

8.7.3.2 Notification

The emergency coordinator will be responsible for assessing hazardous weather conditions and notifying personnel of specific contingency measures. Notifications will include:

- OHM employees and subcontractors
- Client Representative
- Local Civil Defense Organization

8.7.4 Spill/Release Contingency Measures

In the event of release or spill of a hazardous material the following measures will be taken.

Any person observing a spill or release will act to remove and/or protect injured/contaminated persons from any life-threatening situation. First aid and/or decontamination procedures will be implemented as appropriate.

First aid will be administered to injured/contaminated personnel. Unsuspecting persons/vehicles will be warned of the hazard. All personnel will act to prevent any unsuspecting persons from coming in contact with spilled materials by alerting other nearby persons. Without taking unnecessary risks, personnel will attempt to stop the spill at the source. This may involve activities such as uprighting a drum, closing a valve or temporarily sealing a hole with a plug.

Utilizing radio communications, the emergency coordinator will be notified of the spill/release, including information on material spilled, quantity, personnel injuries and immediate life threatening hazards. Air monitoring will be implemented by the emergency coordinator and SSO to determine the potential impact on the surrounding community. Notification procedures will be followed to inform on-site personnel and off-site agencies. The emergency coordinator will make a rapid assessment of the spill/release and direct confinement, containment and control measures. Depending upon the nature of the spill, measures may include:

- Construction of a temporary containment berm utilizing on-site clay absorbent earth

- Digging a sump, installing a polyethylene liner and diverting the spill material into the sump placing drums under the leak to collect the spilling material before it flows over the ground

- Transferring the material from its original container to another container

The emergency coordinator will notify the LANTDIV ROICC, of the spill and steps taken to institute clean-up. Emergency response personnel will clean-up all spills following the spill clean-up plan developed by the emergency coordinator. Supplies necessary to clean up a spill will be immediately available on-site. Such items may include, but are not limited to:

- Shovel, rake
- Clay absorbent
- Polyethylene liner
- Personal safety equipment
- Steel drums
- Pumps and miscellaneous hand tools

The major supply of material and equipment will be located in the Support Zone. Smaller supplies will kept at active work locations. The emergency coordinator will inspect the spill site to determine that the spill has been cleaned up to the satisfaction of the ROICC. If necessary, soil, water or air samples may be taken and analyzed to demonstrate the effectiveness of the spill clean-up effort. The emergency coordinator will determine the cause of the spill and determine remedial steps to ensure that recurrence is prevented. The emergency coordinator will review the cause with the ROICC and obtain his concurrence with the remedial action plan.

9.0 TRAINING REQUIREMENTS

As a prerequisite to employment at OHM, all field employees are required to take a 40-hour training class and pass a written examination. This training covers all forms of personal protective equipment, toxicological effects of various chemicals, hazard communication, bloodborne pathogens, handling of unknown tanks and drums confined-space entry procedures, and electrical safety. This course is in full compliance with OSHA requirements in 29 CFR 1910.120. In addition, all employees receive annual 8-hour refresher training and three day on-site training under a trained experienced supervisor. Supervisory personnel receive an additional 8-hour training in handling hazardous waste operations. Copies of certification of this training will be maintained on-site for all workers assigned to this project.

Site specific training Lead Awareness training will be conducted for site personnel potentially exposed to lead in accordance with 29.CFR 1926.62 All personnel entering the exclusion zone will be trained in the provisions of this site safety plan and be required to sign the Health and Safety Plan Certification in Appendix A.

10.0 MEDICAL SURVEILLANCE PROGRAM

All OHM personnel participate in a medical and health monitoring program. This program is initiated when the employee starts work with a complete physical and medical history and is continued on a regular basis. A listing of OHM's worker medical profile is shown below. This program was developed in conjunction with a consultant toxicologist and OHM's occupational health physician. Other medical consultants are retained when additional expertise is required. Medical certification for all site workers assigned to the project will be maintained on-site.

In addition, pre and post project biological monitoring will be performed on site personnel and subcontractor personnel with potential exposure to lead during the course of the project, in accordance with 29 CFR1926.62. Biological monitoring includes blood lead and zinc protoporphyrin (ZPP) sampling and analysis.

The medical surveillance program meets the requirements of the OSHA Standard 29 CFR 1910.120 (f).

Table 10.1
Worker Medical Profile

Item	Initial	Annual
Medical History	X	X
Work History	X	X
Visual Acuity and Tonometry	X	X
Pulmonary Function Tests	X	X
Physical Examination	X	X
Audiometry Tests	X	X
Chest X-Ray	X	X
Complete Blood Counts	X	X
Blood Chem. (SSAC-23 or equivalent)	X	X
Urinalysis	X	X
Dermatology Examination	X	X
Electrocardiogram/Stress Test	X	X (based on age)

Specific Tests (as required): None

10.1 EXAMINATION SCHEDULE

Employees are examined initially upon start of employment, annually thereafter, and may be examined upon termination of employment. Unscheduled medical examinations are conducted:

- At employee request after known or suspected exposure to toxic or hazardous materials
- At the discretion of the client, the CIH, SSO, or OHM occupational physician after known or suspected exposure to toxic or hazardous materials
- At the discretion of the OHM occupational physician

All nonscheduled medical examinations will include, as a minimum, all items specified above for periodic surveillance examination, with the exception of the chest x-ray, which will be conducted at the discretion of the occupational physician performing the examination.

APPENDIX A

HEALTH AND SAFETY PLAN CERTIFICATION

HEALTH-AND-SAFETY PLAN CERTIFICATION

By signing this document, I am stating that I have read and understand the Site Specific Health-and-Safety Plan for OHM Remediation Services Corp. personnel and visitors entering the site.

REPRESENTING	NAME (PRINT)	SIGNATURE	DATE

APPENDIX B

OHM HAZARD COMMUNICATION PROGRAM

APPENDIX B - OHM HAZARD COMMUNICATION PROGRAM

1.0 GENERAL

The following written hazard communication program has been established for OHM Corporation. The purpose of this program is to transmit information about the various Chemical hazards in the work place to the workers using various media. The transmittal of information will be accomplished by means of a comprehensive hazard communication program, which will include container labeling and other forms of warning, material safety data sheets, and employee training in accordance with 29 CFR 1910.1200 and 29 CFR 1926.59.

The program will be available in corporate and regional Health and Safety Departments for reviews by all employees. It will also be available in the corporate library and clearly marked "Employee Right-to-Know" stations located within each individual shop and on each job site. OHM Corporation will accomplish the hazard communication requirements through formal safety training, departmental safety meetings, and job site safety meetings.

2.0 RESPONSIBILITIES

Purpose
Overall responsibility rests with all corporate officers of OHM Corporation. A brief outline of responsibilities for those persons directly involved with the program will follow. These responsibilities are not all inclusive, but are designed to give guidance in initial and long-term program development since each area is different. These responsibilities may vary.

Scope
This program is intended to cover those employees who are directly involved with the handling of hazardous materials or supervision of those activities.

2.1 Health and Safety Department Responsibilities

1. Review operations with supervisors to determine what tasks require hazard communication training.

2. Advise supervisory people as to which materials may need to be considered hazardous initially and eventually to ensure that hazard task determination is being done according to the written policy.

3. Follow up through safety meetings and safety audits to ensure that supervisors are carrying out prescribed company policy.

4. Notify supervisors of any operating changes affecting the hazardous materials being used.

5. Periodically audit the Hazard Communication Program's progress. Initially, this should be done biweekly, but later the audit may be done on a monthly or quarterly basis.

2.2 Training Department Responsibilities

1. Ensure that up-to-date records are maintained on training of all employees required to handle hazardous materials. The supervisor should keep copies of these records and should also send copies of the initial training to the corporate training secretary for the training file.

2. Educate personnel upon initial training to the requirements of the Hazard Communication Standard.

2.3 Supervisor Responsibilities

1. Identify jobs requiring the use of hazardous chemicals and provide lists of those jobs and chemicals to the Health and Safety Department.

2. Provide the training required by the Hazard Communication Standard and document training of employees in the safe handling of hazardous materials.

3. Inspect engineering controls and personal protective equipment before each use. Health and Safety can help determine a suitable inspection plan for each application as needed.

4. Make daily surveys of the work area to ensure that safe practices are being followed. Advise employees of unsafe work practices on the first occasion and consider further violations as disciplinary violations.

5. Ensure required labeling practices are being followed. Labeling should be affixed to the container when it arrives. If the contents are transferred to another container, then all label information (manufacturer, product name, and product number) must also be affixed to the new container, so that all containers of the material, regardless of size, are labeled.

6. Enforce all applicable safety and health standards through periodic audits.

7. Before ordering a material, determine if a Material Safety Data Sheet exist on file. Request an MSDS for any material without one.

8. Send all new MSDSs to the Health and Safety Department after making a copy for the Employee Right-to-Know file.

2.4 Employee Responsibilities

1. Obey established safety rules and regulations

2. Use all safety procedures and personnel protective equipment as required by company procedures

3. Notify supervisor of the following:

   a. Any symptoms or unusual effects that may be related to the use of hazardous chemicals.

   b. Any missing or unreadable labels on containers.

   c. Missing, damaged, or malfunctioning safety equipment.

4. Use approved labels on containers; do not remove labels (labels will be located in the warehouse).

5. Do not use unapproved containers for hazardous materials. (are materials and containers compatible?)

6. Know where emergency equipment and first-aid supplies are located before considering a possibly dangerous task.

7. Know location of Material Safety Data Sheets (MSDSs). These will be located in the "Employee Right-to-know" station for the respective shop/job site.

8. Know what you are expected to do in case of an emergency. Before the commencement of any task, emergency considerations shall be made.

2.5 Shipping/Receiving Personnel Responsibilities

1. Ensure MSDS are received with initial shipment of a hazardous material; if not, contact purchasing to request the appropriate MSDS and also call the Health and Safety Department to determine if there is an MSDS available until the requested MSDS arrives.

2. Ensure labels are affixed to all containers.

3. Store hazardous materials in designated locations.

4. Use proper personal protective equipment when handling hazardous materials.

5. Report damaged containers or spills to the appropriate Health and Safely Department immediately.

6. Request an MSDS from the manufacturer for any hazardous material that arrives in Findlay from a job. Also, a MSDS shall accompany any hazardous material that is sent to a job.

3.0 HAZARD DETERMINATION

OHM Corporation will rely on Material Safety Data Sheets from hazardous chemical supplier to meet hazard determination requirements. Other relevant data from laboratory analyses, chemical reference materials, and chemical manufacturers', written evaluation procedures will be utilized when warranted. No other method shall be used to determine chemical hazard unless approved by the Health and Safety Department.

4.0 LABELING

The shipping and receiving supervisors will be responsible for seeing that all containers arriving at OHM Corporation are properly and clearly labeled. Shipping and receiving supervisors shall also check all labels for chemical identity and appropriate hazard warnings. If the hazardous chemical is regulated by OSHA in a substance specific health standard, the supervisor or department manager shall ensure that the labels or other forms of warning used are in accordance with the requirements of that standard. Any container that is not labeled shall be immediately labeled correctly after initial discovery.

Each supervisor or department manager shall be responsible for seeing that all portable containers used in their work area are properly labeled with chemical identity and hazard warning.

Supervisors or department managers shall also ensure that labels on hazardous chemical containers are not removed or defaced unless the container is immediately marked with the required information and that all labels are legible in English and prominently displayed on the container or readily available in the work area throughout each shift.

If any container is found and the contents cannot be identified, the supervisor or manager shall be contacted immediately. When proper identification is made, a label shall be affixed to the container immediately. If it is discovered that no MSDS is available, the manufacturer and the Health and Safety Department shall be contacted to assist in locating the proper MSDS. If there is no way to identify the material in the container, the container should be set aside, away from all personnel until it can be tested by the Health and Safety Department or laboratory personnel. Supervisors and managers shall communicate their findings or awareness of such containers to all personnel in the area and to those who enter later.

5.0 MATERIAL SAFETY DATA SHEETS (MSDSS)

Each supervisor or department manager at OHM Corporation will be responsible for maintaining a current MSDS relevant to the hazardous chemicals used in their area. The Health and Safety Department will be responsible for compiling the master MSDS file for the facility and aiding all shops/job sites with the completion and maintenance of their respective MSDS files.

All MSDSs will be readily available for review by all employees during each work shift. Each shop/job site will designate a clearly marked "Employee Right-to-Know" station where employees can immediately obtain a MSDS and the required information in an emergency.

Although manufacturers are required to provide employers with MSDSs on an initial chemical shipment, OHM Corporation purchasing agents (and supervisors purchasing their own material) shall request MSDSs and updates to MSDSs on all purchase orders. Supervisors and department managers that are without proper MSDSs shall be responsible for requesting this information from manufacturers for chemicals. A file of follow-up letters shall be maintained for all hazardous chemical shipments received without MSDSs.

6.0 EMPLOYEE INFORMATION AND TRAINING

It is the responsibility of the supervisor in charge of each employee to ensure that the employee is properly trained. Training employees on chemical hazards and chemical handling is accomplished at the time of initial employment at OHM Corporation, whenever a new chemical (or physical) hazard is introduced into the work area, and through ongoing formal and informal training programs. Additionally, chemical hazards are communicated to employees through daily, morning, shop specific safety meetings, which shall be documented according to topic, major points discussed, and names of those attending (attendance is mandatory). Also, biweekly hazardous chemical safety meetings will be prepared by the Health and Safety Department using similar documentation for shop areas. Attendance is mandatory for these meetings also. Documentation for shop safety meetings will be available in the respective Employee Right-to-know stations and biweekly safety meeting documentation will be available in the Health and Safety Department to all employees for further referencing and questioning. Records of all formal training conducted at OHM Corporation are coordinated and maintained by the Training Department secretary.

At a minimum, OHM Corporation will inform employees on the following:

- The requirements of 29 CFR 1910.1200--Hazard Communication--Evaluating the potential hazards of chemicals and communication of information concerning hazards and appropriate protective measures to employees. This is accomplished in several different ways including, but no limited to, 40-hour OSHA Hazardous Waste Worker Training (29 CFR 1910.120), shop safety meetings, job site safety meetings, Health and Safety Department safety meetings, and formal and informal training about specific chemical hazards.

- The location and availability of the written hazard communication program, list of hazardous chemicals, and MSDS sheets--Notices will be periodically posted on the employee bulletin boards providing the location of the above material.

- Any operations in their work area where hazardous chemicals are present.

- What the company has done to lessen or prevent workers' exposure to these chemicals.

Employee training shall include at least:

- Methods and observations that may be used to detect the presence or release of a hazardous chemical in the work area (monitoring instruments, visual appearance or odor), and acute and chronic health effects.

- The physical and health hazards of chemicals in the work area (accomplished through periodic physical and chemical hazard awareness sessions developed by the Health and Safety Department). These sessions shall serve as chemical hazards refreshers.

- The methods of preventing exposure to hazardous chemicals including the measures OHM Corporation has taken to protect the employees.

- Procedures to follow if OHM Corporation employees are exposed to hazardous chemicals (location of nearest phone, emergency eyewash, and shower will be included). These discussions shall include proper operating procedures for all emergency equipment.

- The details of the hazard communication program developed by OHM Corporation, including an explanation of the labeling system and the Material Safety Data Sheets, and how employees can obtain and use the appropriate hazard information.

- Standard operating procedures within each respective shop. OHM Corporation company policy determines what is considered standard operating procedures.

- Procedures for workers involved in non-routine tasks.

Each supervisor or department manager shall ensure that the above training is emphasized to OHM Corporation employees. The Health and Safety Department will ensure that each shop, department, and job site is properly informing and training all employees through daily group meetings and individual discussions. Whenever a new hazardous chemical is placed into use, the supervisor or department manager shall inform the employees of the hazards which that chemical may pose. The supervisor or manager shall also be responsible for obtaining and making available a MSDS for the new chemical.

7.0 HAZARDOUS NON-ROUTINE TASKS

Occasionally, employees at OHM Corporation are required to perform tasks which are considered to be non-routine. All tasks considered to be non-routine shall be carefully discussed among the supervisor and those performing the task. This safety briefing shall include all possible hazards that may be encountered while completing the task, including:

- Hazard recognition

- Chemicals involved and their hazardous properties

- Physical hazards

- Methods of avoiding all hazards (technical instruments, proper personal protective equipment, etc.)

The following is list of some of the non-routine tasks which may occur at OHM Corporation together with some information needed to complete the tasks safely.

- Confined Space Entry

  - Obtain confined space entry procedure/permit from Health and Safety Department and follow all protocol before beginning task. Complete and have supervisor sign permit before any work begins.

  - Monitor atmosphere with explosimeter, oxygen meter, and any toxic gas meter as may be appropriate.

  - Discuss specific chemical hazards.

  - Discuss protective/safety measures the employee can take (e.g., Personal protective equipment and engineering controls, use of life lines, lock-out/tagout procedures, etc).

  - Measures the company has taken to lessen the hazards including ventilation, respirator, presence of another employee, and emergency procedures.

- Excavation, Trenching, and Shoring

  - Obtain guidelines from Health and Safety Department before beginning task.

  - Comply with all requirements set forth for this activity in 29 CFR Subpart P(excavating, trenching, shoring).

  - Discuss specific chemical hazards.

  - Follow confined space entry procedure above if trench is above shoulder height.

  - Discuss protective/safety measures the employee can take.

  - Review appropriate accident prevention steps.

- Decontamination of Equipment

  - Determine possible contaminants and the hazards associated with them.

  - Determine personal protection needed by contacting the Health and Safety Department.

- Alert all personnel in areas of contamination and decontamination
- Contain and secure all contaminated materials and decontamination materials.
- Contact the Health and Safety Department for proper disposal.

It is company policy that no OHM Corporation employee will begin work on any non-routine task without first receiving a safety briefing from their supervisor or a Health and Safety Department representative.

8.0 INFORMING CONTRACTORS

- Hazardous chemicals to which they may be exposed while performing a task including the following:
  - Chemical properties
  - Physical properties
  - Acute/Chronic health effects
- Location of "Employee Right-to Know" station which includes the following:
  - MSDS for work area
  - Hazard Communication Program
  - Other relevant safety material
- Precautionary measures to be taken to protect employees from chemical and physical hazards.
- Location of nearest emergency equipment (fire extinguisher, eyewash, shower, phone, first-aid kit, etc.)
- Procedures to follow in the event of employee exposure.
- Steps OHM Corporation has taken to reduce the risk of exposure to physical and chemical hazards including the following:
  - Safety meetings
  - Hazard Communication Program
  - Proper storage and labeling of hazardous chemicals
  - Health and Safety Department shop audits
- The methods used to label all hazardous chemicals.

The Health and Safety Department shall offer assistance in providing the above information to contractors working at OHM Corporation. On initial visit by a contractor to OHM Corporation, a "Contractor Right-to-Know" release form shall be completed. This form will state that the above information has been communicated to the perspective contractor.

APPENDIX C

MATERIAL SAFETY DATA SHEETS

Gasoline
Diesel
Jet Fuel
Kerosene
Anti-fog
Bleach
Diesel fuel
Fire extinguishers
Gasoline

Grease
Hydraulic Oil
Isobutylene (calibration gas)
Isopropyl alcohol
Liquid detergent
Motor oil
Oil (hydraulic)
Pentane (calibration gas)
Starting fluid
WD-40

APPENDIX D

SPECIFIC OHM HEALTH AND SAFETY PROCEDURES

SOP No. 2-1 Vehicle Safety
SOP No. 2-3 Personal Lifting Safety
SOP No. 2-4 Slip, Trip, Fall Prevention
SOP No. 2-5 Electrical Safety
SOP No. 2-7 Equipment Inspection
SOP No. 2-9 Fall Protection
SOP No. 3-4 Heat Stress Prevention
SOP No. 4-2 Respiratory Protection
SOP No. 5-4 Decontamination
SOP No. 6-1 Confined Space Entry
SOP No. 6-4 Lockout/Tagout/Try
SOP No. 6-5 Excavation
SOP No. 7-1 High Pressure Washers
SOP No. 7-11 Buried Utility Location and Associated Subsurface Field Activities
SOP No. 7-14 Equipment Operator Qualification

APPENDIX E

HEALTH AND SAFETY FORMS

Accident/Injury/Illness Report Form
Accident/Injury/Illness Status Report Form
First Aid Log
OHM Safety Rules
Daily Safety Meeting Log
Instrument Calibration Logs (LEL/PID)
Air Monitoring Instrument (Direct Reading) Logs
Heavy Equipment Inspection Forms
Fire Extinguisher Checklist/Inventory Form
SCBA/SAR Inspection Forms
Project Site Safety Inspection Checklist (weekly)
SSO Daily Report
Air Sampling and Analysis Log
Air Sampling Data Sheet
Chain-of-Custody Record
Activity Hazard Analysis

APPENDIX B

QUALITY CONTROL PLAN
(INCLUDING SUBMITTAL REGISTER)

FINAL
QUALITY CONTROL PROGRAM
FOR
MAINTENANCE AT RANGES I-1, B-12, AND F-11
MCB CAMP LEJEUNE, NORTH CAROLINA

Prepared for:

DEPARTMENT OF THE NAVY
Contract No. N62470-97-D-5000

Atlantic Division
Naval Facilities Engineering Command
6500 Hampton Boulevard
Building A (South East Wing) 3rd Floor
Norfolk, VA 23508

Prepared by:

OHM Remediation Services Corp.
5445 Triangle Parkway, Suite 400
Norcross, GA 30092

Reviewed by:

Charles W. Hunter
Program QA Manager

James A. Dunn, Jr., P.E.
Senior Project Manager

For John P. Franz, P.E.
Program Manager

December 1998
Delivery Order 0017
OHM Project No. 920901

TABLE OF CONTENTS

STATEMENT OF QC PROGRAM 1

I. QUALITY CONTROL ORGANIZATION 2

II. IDENTIFICATION OF PERSONNEL ASSIGNED TO THE QC ORGANIZATION 2

III. APPOINTMENT LETTERS 2

IV. OUTSIDE ORGANIZATIONS 2

V. INITIAL SUBMITTAL REGISTER & REVIEWERS 2

VI. TESTING LABORATORY ACCREDITATION 2

VII. TESTING PLAN AND LOG 3

VIII. QUALITY CONTROL INSPECTION PLAN 3

IX. PERSONNEL MATRIX 3

FIGURES

I-1 QC Organizational Chart
II-1 Site QC Manager / Representative - Resume
III-1 Site QC Manager / Representative - Letter of Appointment

EXHIBITS

IV-1 Approved Consultant and Subcontractor List
V-1 Submittal Register
V-2 List of Personnel Authorized to Review and Certify Submittals
VII-1 Test Plan and Log
VIII-1 Quality Control Inspection Plan
IX-1 Personnel Matrix

STATEMENT OF QC PROGRAM

OHM Remediation Services Corporation (OHM), a subsidiary of IT Corporation, will provide and maintain an effective Quality Control (QC) Program. This program will be performed in accordance with the approved Program Quality Control Plan (PQCP) developed specifically to be responsive to the contract specification, Contract No. N62470-97-D-5000, Atlantic Division, Naval Facilities Engineering Command and to the Delivery Order (DO) specification(s) made applicable to each project, task or work activity. OHM will perform the inspections and tests required to ensure that materials, workmanship, and construction conform to drawings, specifications, and contract requirements.

Note to Employees

Quality control should not be considered a person or an organization of personnel, but a concept to perform in such a manner that the end product of our efforts meet established criterion, the customer's needs. The quality control individual or group cannot inspect quality into the final product, but only inspect and document the results of our efforts. The only people that can build quality into the product are the individuals performing the task of producing the end product.

It should be noted by all employees that the documentation requirements of OHM procedures, plans, and the delivery order specifications are considered equally as important as the end product itself. When it is stated that the documentation will be approved prior to the start of work, this is exactly what is intended. To eliminate problems in this area requires careful planing and execution by everyone.

We would do well to remember that our livelihood depends on how well we satisfy our customer. To accomplish this requires teamwork and attention to detail by all employees and contractors.

I. QUALITY CONTROL ORGANIZATION

The QC organization is depicted in the Organizational Chart. Figure I-1.

II. IDENTIFICATION OF PERSONNEL ASSIGNED TO THE QC ORGANIZATION

Figure II-1 provides the resume of the Site QC Manager. The resumes of any additional QC staff members will be submitted to the CO for approval prior to assignment. This action will be performed in accordance with the contract specification Section C, Part 6.5.

III. APPOINTMENT LETTERS

The Site QC Manager appointment letter is provided as Figure III-1. Similar letters will be provided when necessary to describe the duties and authorities of personnel assigned to the position of Alternate or Assistant QC Manager.

IV. OUTSIDE ORGANIZATIONS

A list of outside organizations such as architectural and consulting engineering firms, and subcontractors employed by OHM for work under this task or delivery order is provided in Exhibit IV-1. This list provides each firm's name and address and a description of the services each firm will provide. This list will be maintained current and will be available for review.

V. INITIAL SUBMITTAL REGISTER & REVIEWER

V.1 Submittal Register

The Submittal Register is provided as Exhibit V-1.

V.2 Personnel Authorized to Review and Certify Submittals

Personnel authorized to review and certify submittals other than the Site QC Manager are identified on Exhibit V-2. Any additional personnel assigned to perform submittal review and certification must be approved by the CO, prior to performance.

VI. TESTING LABORATORY ACCREDITATION

Testing laboratory accreditation requirements are addressed in the contract specification Section C, Part 6.12.

VII. TESTING PLAN & LOG PREPARATION

A Testing Plan and Log has been prepared for this DO and is provided as Exhibit VII-1.

VIII. QUALITY CONTROL INSPECTION PLAN

The Quality Control Inspection Plan, Exhibit VIII-1, lists each specification section and definable feature of work with provisions for recording the corresponding checklist/report for each phase of the three phase control process. As each control phase is satisfactorily preformed, the Site QC Manager will record the corresponding checklist/report number.

Note: A definable feature of work is a task which is separate and district from other tasks and requires separate control procedures.

This list has been prepared and maintained in accordance with the contract specification Section C, Part 6.7 and will be agreed upon during the Coordination and Mutual Understanding Meeting. The list will be keyed to the construction schedule. Each preparatory, initial and follow-up phase checklist/report will reflect the construction activity number derived from the construction schedule, and will reference the procedures followed for each control phase.

IX. PERSONNEL MATRIX

The Site QC Manager will prepare and maintain the personnel matrix, Exhibit IX-1, showing each section of the DO specification with identification of who will review and approve submittals, who will perform and document the three phases of control, and who will perform and document testing. This matrix should be completed as much as possible prior to and during site mobilization. The matrix will be maintained current by the Site QC Manager and will be available for review.

Figure I-1

OHM Remediation Services Corporation
Delivery Order No. 0017

QC Organizational Chart

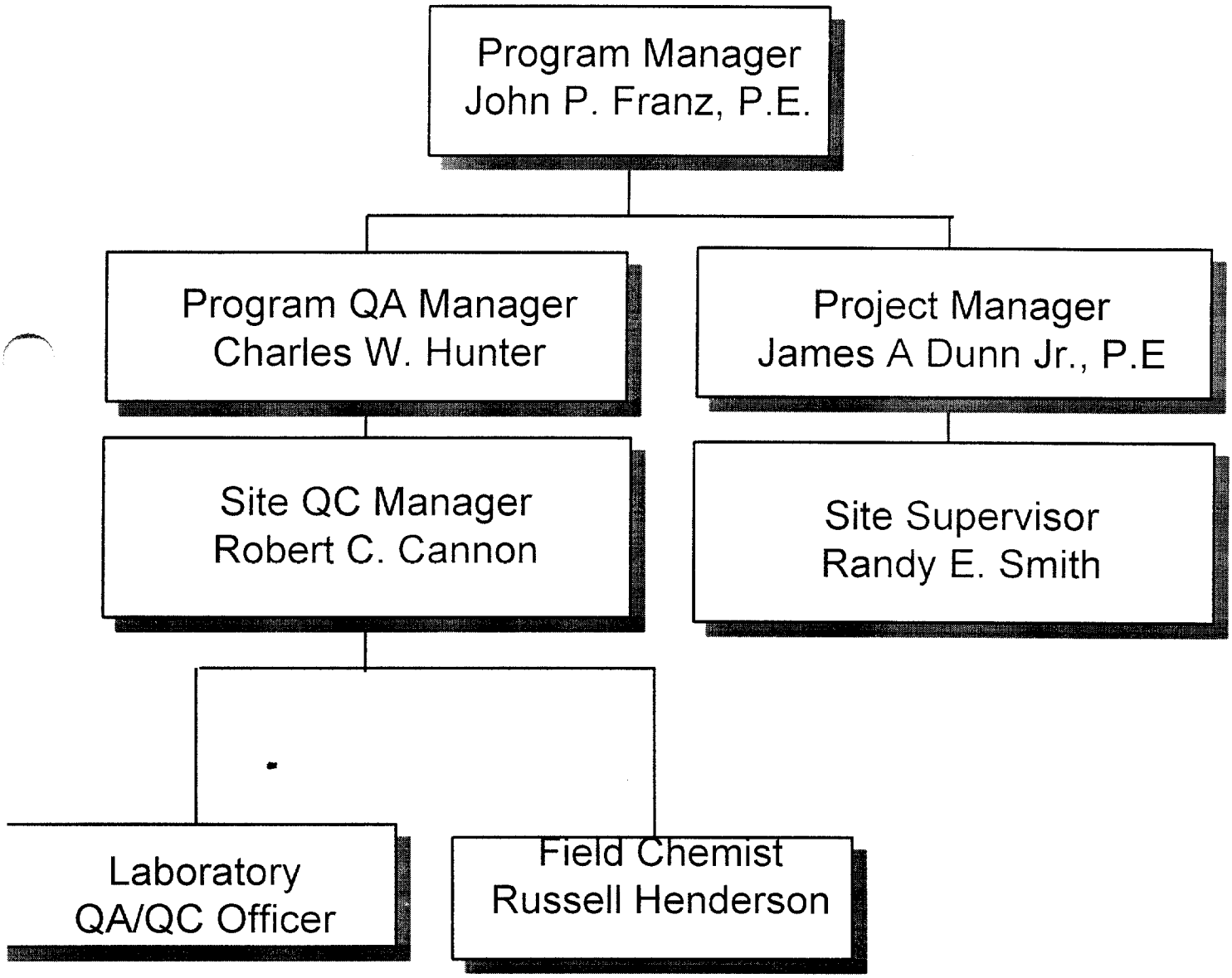

Figure II-1
Site QC Manager Resume

ROBERT C. CANNON

Senior level Quality Assurance / Quality Control Manager with over twenty-seven years (27) of professional construction experience acquired within both government and commercial sectors. Construction management experience includes QA / QC, field engineering and construction supervision. Eighteen years of nuclear power industry experience involving commercial and defense reactor systems. Contractor QA Manager at the U.S. Department of Energy's Morgantown Energy Technical Center for the DOE Office of Environmental Restoration and Waste Management, Office of Demonstration, Testing, and Evaluation.

Experience

1998 to Present **the IT Group**

QA/QC Manager assigned to the LANTDIV RAC program for implementing the quality control program and site specific QC plans. Site QC Manager at Site 1, Northern Riverside Waste Disposal Area, Allegeney Ballistics Laboratory. Responsible for enforcing the LANTDIV QC program including the performance of inspection and test activities; reporting of inspection and test results; providing oversight of inspection and test activities performed by others; performing review and certification of submittals; and, providing interface with project management, engineering, operations and customer representatives.

1995 to 1997 **S. Powell Construction Company**

Quality Assurance Manager for the construction of a $10 M hot gas desulphurization research facility at the Department of Energy's Morgantown Energy Technology Center in Morgantown, WV. Reporting directly to the company president. Responsible for verifying construction in accordance with applicable design standards for all elements of construction. Performed QC field inspection and test activities, as well as audits and assessments of equipment and material suppliers. Also performed various project management responsibilities.

1993 to 1995 **Lutz & Myer, Inc.**

Construction Quality Assurance Consultant for the development and implementation of construction management and QA/QC program for a major international retailer. Provided training and supervised the implementation of programs for several pilot project sites.

1989 to 1993 **Inland-Rust Maintenance & Construction**

Senior QA/QC Engineer responsible for the developing the Corporate Quality Assurance program manual for major maintenance and capital construction projects; supervision of inspection and testing personnel, administration of outside testing laboratories and agency contracts, and development of quality assurance project plans for individual projects. Served as Chairman on the Inland-Rust Quality Education Committee.

Project assignments included multi-craft supervision for major maintenance on a Pickle Liquor Waste Water Circulation project ($750K), an 80 inch HSM Laminar Flow project ($5M), and No. 5 and 6 Blast Furnace Pulverized Coal Injection project ($7.9M). Responsible for Health and Safety activities for all assigned craft personnel.

1981 to 1988 **Gilbert / Commonwealth, Inc.**

Information herein is proprietary and confidential and to be used or released to others only with explicit written permission of OHM Remediation Services Corp.

Senior Quality Consultant with responsibilities for business development and providing consulting support to numerous clients organization. Major assignments included the following:

1987 - 1988 Field assigned to the Department of Energy's Savannah River Plant supporting E.I. DuPont de Nemours for the construction of a multi-million doller Navy Fuel Processing facility. Responsibilities involved QA program development and implementation, field QC inspection and test activities; and, interface with site engineering and construction management.

1986 - 1987 Sr Quality Consultant to The Department of Energy's Savannah River Plant supporting E.I. DuPont de Nemours for the performance of quality assurance audits on Heavy Water, Health Physics, Environmental Protection and Laboratory R&D facilities.

Assisted in the development of a construction management strategy and third party quality control program for the Allegheny Power Service Corporation's Dam # 4 Hydroelectric project on the Potomac river.

1985 - 1986 **Field Mechanical Engineer/Construction Supervisor** assigned to the Commonwealth Edison Braidwood Nuclear Power station assisting the construction department at Unit 2. Performed planning, cost control, material procurement, supervision of craft personnel and coordination of support activities while ensuring adherence to job schedule. **QA Consultant** assigned to the Braidwood Construction Assessment Program (BCAP). Hired, trained and supervised overview/inspection staff, as well as performing review of past inspection efforts. Technical responsibilities for interpreting reinspection results, reviewing and approving resultant documentation and providing direct interface with other organizations involved in the construction assessment program. Instrumental in preparing the final report and supporting Commonwealth Edison's General Supervisor of Quality Assurance by attending public meetings with the U.S. Nuclear Regulatory Commission Region III Director and staff.

1981 - 1985 **QA Consultant and Lead Auditor** assigned to the Cleveland Electric Illuminating Company's $1.4 B Perry Nuclear Power Plant. Performed and audits on all contractor QA programs in accordance with ANSI N45.2.12 commitments. **QA Engineer** for ASME Section III, Division 2 concrete activities in the containment pressure boundary area. Interfaced with the architect engineer in order to resolve any and all civil/structural deficiencies.

1970 to 1981 **Stone & Webster Engineering Corporation**

Quality Control Inspection Supervisor responsible for QC inspection and test activities at the following nuclear power stations:

1980 - 1981 Assigned to the Shoreham Nuclear Power Station to supervise several inspection crews inspecting small bore pipe seismic hanger and support systems. Also performed civil and structural inspection activities.

1976 - 1980 Assigned to Nine Mile Point Nuclear Power Station, Unit 2. Responsible for the supervison of QC inspectors and QC engineers performing all inspection, testing and documenting of civil and structural construction activities.

1976 Short term assignment to North Anna Nuclear Power Station, Units 3 and 4. Responsible for inspecting, testing, and documentating of rebar cadwelding performed on both units. Also performed inspection of structural welding and installation of embedments in Unit 3 and 4 reactor containment mats and walls.

1974 - 1976 **Lead QC Civil / Structural Inspector** for the construction of Millstone Point Nuclear Power Station.

1970 -1974 **Field QC Civil / Structural Inspector** for the construction of Beaver Valley Nuclear Power Station Units 1 and 2.

Certifications:

Level III Civil Inspector per ANSI N45.2.6
Level II Mechanical Inspector per ANSI N45.2.6

Information herein is proprietary and confidential and to be used or released to others only with explicit written permission of OHM Remediation Services Corp.

Lead Auditor per ANSI N45.2.23

Training:

40hr OSHA training 29CFR 1910.120
Total Quality Management - Quitico Management Group
Portland Cement Association - ASME Section III, Division 2, Level 2.
U.S. Army Corps of Engineers Construction Quality Management Course

Military Service:

U.S. Army Infantry, Vietnam 1968 to 1970, Honorably Discharged

Information herein is proprietary and confidential and to be used or released to others only with explicit written permission of OHM Remediation Services Corp.

Figure III-1

October 22, 1998

Mr. Robert C. Cannon
The IT Group
200 Horizon Center Blvd.
Trenton, NJ 08691-1904

RE: Site QC Manager
Contract N62470-97-D-5000
Delivery Order 0017

Dear Mr. Cannon:

This letter will serve as your appointment as the Site Quality control Manager on the referenced project and will also clarify your duties and authority in this position. In this position, you will be authorized to use available resources to satisfy all applicable requirements of the Program and Delivery Order Quality Control Plans.

This authorization specifically gives you the authority to direct removal and replacement or correction ;of nonconforming materials or work and stop work authority when continuation would be unsafe to personnel, harmful to the environment, or result in a significant degradation of quality.

You will be expected to work closely with the Project Manager, Site Supervisor and other project personnel, but you will not be directly responsible to anyone but myself for resolution of quality issues when working in the capacity of Quality Control Manager.

If you have any question in this matter, please call me at (609) 584-6840.

Sincerely,

Charles W. Hunter
Program QC Manager
LANTDIV RAC Program

EXHIBIT IV-I

APPROVED CONSULTANT & SUBCONTRACTOR LIST

COMPANY NAME & ADDRESS	DESCRIPTION OF SERVICES PROVIDED:
Action Target Provo, Utah	Technical Assistance
E&R Inc. Kingston, NC	Electrical Contractor
Wills Trucking Columbia, SC	Transportation & Disposal
Exide Battery Laureldale, PA	Recycling

EXHIBIT V-!
SUBMITTAL REGISTER
Range Maintenance I-1, B-12& F-11
MCB Camp Lejeune
North Carolina

Delivery Order 0017

Contract No N62470-97-D-5000 Project Number 920901 Contracto OHM Remediation Services Corp

Submittal No	Spec Section No.	SD No., and Type of Submittal Material or Product	Spec Para No.	Classification Approval by Contracting Officer *	Government or A/E Reviewer	Transmittal Control No	Planned Submittal Date	Contractor Action: Action Code	Contractor Action: Date of Action	Contractor Action: Date Forward to Approved Authority Date Received From Contractor	Approving Authority Action: Date Forwarded to other Reviewer	Approving Authority Action: Date Received from other Reviewer	Approving Authority Action: Action Code	Approving Authority Action: Date of Action	Contractor: Mailed to Contractor Received from Approved Authority	Remarks
(a)	(a)	(b)	(c)	(d)	(e)	(f)	(g)	(h)	(i)	(j)	(k)	(l)	(m)	(n)	(o)	(p)
	N/A	**SD-08 Statements**														
		Site Work Plan			G											
		Quality Control Plan			G											
		Environmental Protection Plan			G											Pre-approved under D0151
		Site Health & Safety Plan			G											Pre-approved under D0151
		Field Sampling & Analysis Plan			G											Pre-approved under D0151
		Erosion & Sediment Control Plan			G											Pre-approved under D0151
		Transportation & Disposal Plan			G											Pre-approved under D0151
	N/A	**SD-09 Reports**														
		Contractor Closeout Report			G											

*Navy Notes:
Approved By:
G. Contracting Officer
Blank CQC Manager

*NASA Notes:
Approved By:
Blank Contracting Officer

*Army Notes:
Classification:
GA Government Approval
FIO For Information Only

Action Codes (Others may be prescribed by Transmittal Form)
NR Not Reviewed
A Approved
AN Approved as Noted
RR Disapproved, Revise and Resubmit

EXHIBIT V-2

LIST OF PERSONNEL AUTHORIZED TO REVIEW & CERTIFY SUBMITTALS

SPECIFICATION SECTION:	SUBMITTAL TYPE:	AUTHORIZED PERSONNEL:
N/A	Equipment and Materials	James A. Dunn Jr.

EXHIBIT VII-1

TESTING PLAN AND LOG

CONTRACT NUMBER N62470-97-D-5000	PROJECT TITLE & LOCATION MAINTENANCE at RANGES I-1, B-12 & F-11 MCB CAMP LEJEUNE	CONTRACTOR IT/OHM

SPECIFICATION SECTION AND PARAGRAPH NUMBER	ITEM OF WORK	TEST REQUIRED	ACCREDITED /APPROVED LAB		SAMPLED BY	TESTED BY	LOCATION OF TEST		FREQUENCY	DATE COMPLETE	DATE FORWARDED TO CONTR. OFF	REMARKS
			YES	NO			ON SITE	OFF SITE				
WP – 3.4		Waste Characterization Sampling Analysis										
WP – 3.5 3.8		Field Sampling Analysis										

EXHIBIT VIII-1
QUALITY CONTROL INSPECTION PLAN
Maintenance at Ranges I-1, B-12 & F-11
MCB Camp LeJeune, North Caroline
Delivery Order No. 0017

Specification Section	Definable Feature of Work	Activity Number*	Control Check Verification		
			Preparatory Phase Checklist/Report No.	Initial Phase Checklist/Report No.	Follow-up Phase Checklist/Report No.
N/A	Site Preparation				
	Excavation & Screening				
	Soil Stabilization				
	Berm Restoration				
	Concrete Foundation				
	Installation of Bullet Trap with Dust Collector				
	Wall & Baffle Construction				
	Sidewalks				
	Site Drainage & Revegetation				

* Include schedule date if a CPM network is invoked.

EXHIBIT IX-1

PERSONNEL MATRIX

SPECIFICATION SECTION:	SUBMITTALS REVIEWED BY:	THREE PHASE PERFORMED BY:	TESTING PERFORMED BY:
N/A	Site QC Manager	Site QC Manager	Field Chemist

APPENDIX C

SAMPLING AND ANALYSIS PLAN

DRAFT
SAMPLING AND ANALYSIS PLAN
FOR
RANGES I-1, B-12, AND F-11
MCB CAMP LEJEUNE, NORTH CAROLINA

Prepared for:

DEPARTMENT OF THE NAVY
Contract No. N62470-97-D-5000
Atlantic Division
Naval Facilities Engineering Command
6500 Hampton Boulevard
Building A (South East Wing) 3rd Floor
Norfolk, VA 23508

Prepared by:

OHM Remediation Services Corp.
5445 Triangle Parkway, Suite 400
Norcross, GA 30092

Reviewed by:

Terence A. Whitt
Manager of Field Analytical Services

James A. Dunn, Jr., P.E.
Senior Project Manager

John P. Franz, P.E.
Program Manager

October 1998
Delivery Order 0017
OHM Project No. 920901

TABLE OF CONTENTS

1.0 SAMPLING METHODS AND PROCEDURES 1-1

1.1 BERM SOIL EXCAVATION AND SCREENING 1-1
1.2 SOIL SAMPLE COLLECTION 1-1
1.3 SOIL SAMPLE COLLECTION AFTER CHEMICAL TREATMENT 1-2
1.4 COLLECTED LEAD METAL SAMPLE COLLECTION 1-2
1.5 CONTRACTOR GENERATED WASTE SAMPLING - SOLIDS 1-2
1.6 CONTRACTOR GENERATED WASTE SAMPLE: WOOD CHIPS, ETC 1-3

2.0 SAMPLE IDENTIFICATION 2-1

3.0 SAMPLE PRESERVATION AND HOLDING TIMES 3-1

4.0 FIELD QC SAMPLES 4-1

5.0 DECONTAMINATION 5-1

6.0 CROSS-CONTAMINATION MINIMIZATION 6-1

6.1 SAMPLE LOG BOOK 6-1
6.2 SAMPLE LABELS 6-2
6.3 CUSTODY SEALS 6-3
6.4 CHAIN-OF-CUSTODY PROCEDURES 6-3

7.0 PACKAGING, HANDLING AND SHIPMENT OF SAMPLES 7-1

1.0 SAMPLING METHODS AND PROCEDURES

The following sections describe sampling locations, frequencies, sample matrices, and measurements of parameters of interest. Table 1.0 " Sampling Summary " presents a summary of these items.

Non-disposable sampling equipment will be thoroughly cleaned between samples using the decontamination procedures described in Section 5.0. Field sampling personnel will wear disposable sampling gloves during sampling and will change gloves between sample locations to minimize the potential for cross-contamination. Other PPE may be required for sampling as per the SSHP. Contact with the sample should be avoided to minimize the potential for cross-contamination.

1.1 BERM SOIL EXCAVATION AND SCREENING

The soil on the top and side face of the berm adjacent to the range will be excavated until no lead particles remain visible in the soil. Excavation will proceed with the removal of soil in layers of berm soil on the top and front surface of the berms. After each layer of berm soil is excavated, a visual inspection will be performed for metal bullet fragments. Additional layers will be excavated until no visible fragments are encountered.

Excavated soils will be screened as indicated in the work plan. Sampling will be performed as indicated below.

1.2 SOIL SAMPLE COLLECTION

A five point composite soil sample will be collected from the soils that are passed through the 3/16-inch screen. Each composite sample will consist of five grab samples collected every 100 yards of the excavated screened soils. Soil samples will be collected by the following procedures:

1) Using a stainless steel hand auger, auger down to 1 foot, collecting the contents of the bucket into a stainless steel bowl.
2) Repeat until five grab samples have been collected in the stainless steel bowl.
3) Using the stainless steel spoon, homogenize the soil in the stainless steel bowl thoroughly using the quartering technique. Fill the sample container with the homogenized soil. Cap and label the containers

The soil samples will be sent to an off-site laboratory for TCLP analyses. Soils containing lead at levels exceeding the TCLP criterion (5 mg/L) will be considered contaminated. Soils

with lead concentrations below TCLP criteria will not be considered contaminated and will be used for backfilling excavations.

1.3 SOIL SAMPLE COLLECTION AFTER CHEMICAL TREATMENT

Soils containing lead at levels exceeding TCLP criteria will be considered contaminated and treated with triple super phosphate (TSP) or other equivalent reagent for stabilization. One five point composite sample will be collected from every 100 yards of the treated soil following stabilization. The sample will be collected from the stockpile to verify that characteristically hazardous lead soils have been decharacterized to below 5.0 mg/L lead. Soil samples will be collected by the following procedures and analyzed for the parameters listed in Table 1.0.

1) Using a stainless steel spoon collect a sample from each corner and put in a stainless steel bowl. Remove the top 6 inches of the surface soil before collecting the grab sample.
2) With a bucket auger, collect one sample from the inside of the 100-cubic yard pile (4 to 5 feet deep into the pile) and add to the stainless steel bowl.
3) Using the stainless steel spoon, homogenize the soil in the stainless steel bowl thoroughly using the quartering technique. Fill the sample container with the homogenized soil. Cap and label the containers

1.4 COLLECTED LEAD METAL SAMPLE COLLECTION

The metal fragments collected during the entire screening operation will be sampled for the total lead content assay determination. One five point composite sample will be collected from the metal fragments collected during the operation. The metal fragment sample will be analyzed for the parameters as required by the recycling facility. Metal fragment samples will be collected manually. Collect representative fragments from the screened container of metal. These fragments should represent the different caliber and types of projectiles recovered. Fill the sample container with the selected fragments.

1.5 CONTRACTOR GENERATED WASTE SAMPLING - SOLIDS

Personal Protective Equipment (PPE) like Tyvek, disposable sampling gloves will be sampled to select disposal options. The samples will be collected using scissors, and analyzed

for the parameters listed in Table 1.0. Depending on the disposal facility, additional analysis may be required.

1.6 CONTRACTOR GENERATED WASTE SAMPLE: WOOD CHIPS ETC.

Wood chips and other debris will be sampled to select disposal options. The samples will be collected using scissors, knives or stainless steel spoons, homogenized in a stainless steel bowl using quartering technique, and sent to an off-site laboratory for analysis for the parameters listed in Table 1.0 Depending on the disposal facility, additional analysis may be required.

TAB[illegible]E 1.0
SAMPLI[illegible]UMMARY

Sample Task	Sample Point *	Matrix	Sampling Frequency	Approx Sample No	Sampling Method	Sampling Equipment	TAT	QC Level	Required Analysis	Analytical Method	Holding Time	Sample Preservation	Containers
Initial Screening	One sample from every 100 yards of excavated soil screened through 3/16 " screen (approximate 2325 yards expected)	Soil	Once every 100 yards	24 + 2 dup.	5 point composite	Split spoon, SS spoon	3 days	OHM Min	TCLP Pb	1311/6010	180 Days	Cool to 4° C	1ea 4 oz jar with Teflon septa cap
Initial Screening	One sample from every 100 yards of excavated soil that did not pass through 3/16 inch screen	Soil	Once every 100 yards	1 + 1 dup.	5 point composite	Split spoon, SS spoon	3 days	OHM Min	TCLP Pb	1311/6010	180 Days	Cool to 4° C	1ea 4 oz jar with Teflon septa cap
Treated Material	One sample from every 100 yards of TSP treated soil (approximate 1200 yards expected)	Soil	Once every 100 yards of treated material	12 + 0 dup	5 point composite	Split spoon, SS spoon	3 days	OHM Min	TCLP Pb	1311/6010	180 Days	Cool to 4° C	1ea 4 oz jar with Teflon septa cap
Lead Disposal	One lead fragment sample from material that did not pass through 3/16 inch screen	Solid	Once during this effort	1	Composite of lead samples collected from each batch of screened material	SS spoon, SS bowl	3 days	OHM Min	Percent Lead content assay	As required by the recycling facility	As required by the recycling facility method requirement	Cool to 4° C	1ea 16 oz jar with Teflon septa cap

TAP[illegible] 1.0
SAMPLIN[illegible] UMMARY

Sample Task	Sample Point *	Matrix	Sampling Frequency	Approx Sample No	Sampling Method	Sampling Equipment	TAT	QC Level	Required Analysis	Analytical Method	Holding Time	Sample Preservation	Containers
Solid Waste Disposal	PPE etc.	Solid	Once during this effort	1	Composite	Split spoon, SS bowl, SS spoon	3 Days	OHM Min	TCLP Volatiles	1311/8260B	14 Days	Cool to 4° C	1 ea 4oz and 2ea 8oz jar both with Teflon cap seal
									TCLP Semi VOA	1311/8270B	14 Days		
									TCLP Pesticides	1311/8081	14 Days		
									TCLP Herbicides	1311/8150B	14 Days		
									TCLP Metals	1311 6010A 7471A	180 Days Hg 28 Days		
									Reactive Sulfide	Sec. 8.3	14 Days		
									Reactive Cyanide	Sec. 8.3	14 Days		
									pH	Sec. 8.2	None		
									Flash Point	Sec. 8.1	N/A		
Solid Waste Disposal	Debris, wood etc.	Solid	Once during this effort	1	Composite	Split spoon, SS bowl, SS spoon	3 Days	OHM Min	TCLP Volatiles	1311/8260B	14 Days	Cool to 4° C	1 ea 4oz and 2ea 8oz jar both with Teflon cap seal
									TCLP Semi VOA	1311/8270B	14 Days		
									TCLP Pesticides	1311/8081	14 Days		
									TCLP Herbicides	1311/8150B	14 Days		
									TCLP Metals	1311 6010A 7471A	180 Days Hg 28 Days		
									Reactive Sulfide	Sec. 8.3	14 Days		
									Reactive Cyanide	Sec. 8.3	14 Days		
									pH	Sec. 8.2	None		
									Flash Point	Sec. 8.1	N/A		

Notes:

* Field blanks, rinsates or trip blanks will not be collected during for this activity

2.0 SAMPLE IDENTIFICATION

The samples collected on-site will be provided with a unique sample designation. The number will serve to identify the site, location, and specific sample identification number. The sample designation format will be as follows:

CLJXXX-1-NNN-DD
where:
CLJ = Camp Lejeune
XXX-1 = Delivery Order and Mod No. for the project (0017-1)
NNN = Sequential number starting at 001
DD = QC identifier
If sample is a field QC sample, the following designations will be added as a suffix

FB - Field Blank
RB- Equipment Rinsate Blank
(Duplicates must not to be identified to the laboratory)

Sample location information will be included in the sample description area of the COC. Sample sequential numbers are not to be duplicated. Duplicate samples will be sent to the off-site laboratory blind. The latest OHM COC has been designed so that the cross-reference of the duplicate to the original sample can be included on the last page of the COC that does not go to the laboratory.

3.0 SAMPLE PRESERVATION AND HOLDING TIMES

Samples collected for off-site analyses will be sent to the laboratory within 24 hours after collection to ensure that the most reliable and accurate answers will be obtained as a result of the analysis. The holding time begins from the date and time of collection in the field.

All environmental and treatment system samples, except for aqueous samples for metals, will be preserved to a temperature of 4°±2°C prior to shipment to the analytical laboratory, using ice or refrigeration. This temperature should be maintained during shipment by placing ice in leak-proof containers, and placing it above and below the sample containers. Other sample preservation requirements and holding times applicable to the sample matrix and analyses are listed in Table 1.0.

4.0 FIELD QC SAMPLES

The appropriate number of field QC samples, as specified in the NFESC, 1996 document will be collected during this project. These samples will include field blanks, equipment rinsate blanks and field duplicate samples. These samples will be collected at the following frequencies and analyzed for the parameters listed in Table 1.0.

- Field Blanks (Ambient Blanks) – Field blanks , sometimes referred to as ambient blanks, are samples of contaminant-free media (reagent grade water) witch are prepared at the site and handled in the field in the same manner as all other field samples. Field blanks are collected during the course of field sampling and, to the extent possible, in the actual sampling locations. Field blanks are collected by placing contaminant-free medium (reagent grade water) in the same type of container as field sample. Field blanks are preserved and stored in the same manner as field samples. At a minimum, one field blank per contiguous site from each sampling event is collected and is analyzed for those interfering contaminants that could potentially be present in ambient air at the sampling site. Approximate number of field blank samples planned to be collected is presented in Table 1.0.

- Equipment Rinsate Blank – Equipment rinsate blanks are the final analyte-free water rinse from equipment cleaning collected daily for each matrix sampled. An equipment rinsate blank is collected in the same type of sample containers, and in all other ways is handled in the same manner as other field samples. The equipment rinsate blank must be collected during the sampling event (after collection of at least one field sample) after the sampling equipment has been decontaminated and prior to collection of the next field sample. All equipment that comes into contact with field samples must be decontaminated prior to use. The use of disposable equipment is acceptable, but does not obviate the requirement for decontamination prior to use, or the requirement for collection of equipment rinsate blanks. Equipment rinsate blanks for disposable equipment are collected by passing contaminant-free medium through or over the decontaminated equipment. One equipment rinsate blank is collected per day, per sampling event for each matrix sampled that day. Equipment rinsates are analyzed for the same parameters as the sample collected that day. Approximate number of equipment blank samples planned to be collected is presented in Table 1.0.

- Field Duplicate – Duplicates for soil samples are collected, homogenized, and split. All samples except volatiles are homogenized and split. Volatiles are not mixed, but select segments of soil are taken from the length of the core and placed in 4 oz glass jars. The duplicates for water samples are collected simultaneously. Field duplicates must be collected at a frequency of one sample per day per matrix or 10% of the field samples per matrix. All the duplicates should be sent to the primary laboratory responsible for analysis, along with the samples. Approximate number of field duplicates

planned to be collected are presented in Table A-1, Appendix A. Duplicates will be sent to the off-site laboratory blind.

- Trip Blank -- Trip blanks are defined as samples which originate from analyte-free water taken from the laboratory to the sampling site and returned to the laboratory with the volatile samples. One trip blank should accompany each cooler containing aqueous and non-aqueous volatile samples, should be stored at the laboratory with the samples, and analyzed by the laboratory. Trip blanks are only analyzed for volatile organic compounds and may not be required for this project if disposal samples are not taken. Approximate number of trip blank samples planned to be analyzed is presented in Table 1.0.

5.0 DECONTAMINATION

All sampling equipment (hand augers, spoons, stainless steel/glass mixing bowls, etc.) will be decontaminated before sampling commences, between each sample location, and prior to leaving the site. The procedures for decontamination of equipment according to NEESA 20.2-047B are as follows.

1) Remove gross contamination by scraping or brushing.
2) Clean with tap water and phosphate-free laboratory detergent (liquinox), using a stiff brush to remove all surface contaminants.
3) Rinse thoroughly with tap water.
4) Rinse with 1:1 nitric acid (HNO3) metals grade (metal samples only).
5) Rinse thoroughly with tap water.
6) Rinse thoroughly with deionized/distilled water.
7) Rinse twice with reagent grade isopropanol or methanol.
8) Rinse thoroughly with organic-free water and allow to air dry. (Do not rinse with deionized/distilled water. If organic-free water is not available, allow equipment to air dry.)
9) Wrap equipment with aluminum foil prior to storage or transportation to sample locations.

Decontamination fluids will be collected in properly labeled 55-gallon drums, and staged in a secure area until final disposal unless other arrangements are made.

6.0 CROSS-CONTAMINATION MINIMIZATION

Cross-contamination is the introduction of contaminants into the sample through the sampling and/or sample-handling procedures. It can cause an otherwise representative sample to become non-representative. The most important means of minimizing cross-contamination are as follows:

- Sampling expendables, i.e., sample gloves, pipettes, string, dip jars, etc., must not be reused. Used expendables should be labeled so they are not confused with non-contaminated trash
- Minimum contact should be made between the sampler and the sample medium. For example, a sampler should not touch the sample during while loading the sample in the container.
- Sample collection activities should proceed progressively from the least contaminated area to the most contaminated area.
- Sampling equipment should be constructed of Teflon, stainless steel, or glass that has been properly precleaned for collecting samples. Equipment constructed of plastic or PVC should not be used to collect samples for trace organic analyses.
- Any tools used in sampling must be carefully decontaminated prior to first use and after each use.
- Activities that could contaminate samples are prohibited in the sample handling and preparation area. These activities and the possible contaminants include:

Activity	*Possible Contaminants*
Smoking	Poly Aromatic Hydrocarbons
Spraying for insects	Pesticides, oils, solvents
Spraying for weeds	Herbicides, oils, solvents
Refueling	BTEX, hydrocarbons
Painting and paint stripping	Solvents

6.1 SAMPLE LOG BOOK

It is necessary for the sampling crew to maintain daily field notes. Items that must be included are sampling protocol, any changes to the procedures, meetings, instructions, safety precautions, personnel protection, and activities pertaining to the samples. The person taking notes must be knowledgeable enough about these activities to know which details are important.

- Repetition of information recorded in other permanent logs should be avoided, but enough should be recorded to present a clear and accurate picture of technical activities. At a later date, should a question arise concerning a specific event or a procedure used, it will be answered from these notes. The following information should be logged into the logbooks and/or database:
- Date and time of sampling
- Sample number, locations, type, matrices, volumes, sample ID and descriptions, type and number of sample containers, names and signatures of individuals performing sampling tasks, Chain-Of-Custody (COC) and air bill numbers, preservatives, and date samples were sent
- Name of laboratories and contacts to which the samples were sent, turn around time (TAT) requested, and data results, when possible
- Termination of a sample point or parameter and reasons
- Unusual appearance or odor of a sample
- Measurements, volume of flow, temperature, and weather conditions
- Additional samples and reasons for collecting them
- Levels of protection used (with justification)
- Meetings and telephone conversations held with LANTDIV, NTR, regulatory agencies, project manager, or supervisor
- Details concerning any samples split with another agency
- Details of QC samples collected

These notes must be dated and signed (each page) for validity. All logbooks will be bound and pre-numbered. All log book entries will be made with indelible ink and legibly written. The language will be factual and objective. No erasures will be permitted. If an incorrect entry is made, the error will be crossed out with a single strike mark, initialed, and dated. When audits are performed, the auditor's remarks and decisions must also appear in these notes. These audits should be followed up by written report submitted by the auditor, including opinions and conclusions. A copy of this report should be placed in the project file and one copy kept in the sampling file for easy reference. This information will also be entered in to the data base program that been prepared for the site. It will be entered daily by the field chemist or sample technician. This person will be the point of contact for all sampling and analytical information. Report outputs from the database is an acceptable substitute for the sample logbook.

6.2 SAMPLE LABELS

Any samples placed into a sample container will be identified by a sample label. Sample label will identify the following information:

(1) PROJECT NUMBER

(2) DATE- Month, day, year
(3) TIME- Military time
(4) SAMPLE NUMBER- See Section 3.2 for designations
(5) SAMPLE DESCRIPTION
(6) SAMPLER- Sampler's name
(7) PRESERVATIVES
(8) ANALYSIS REQUIRED- See Table 1-1

The information described above should be printed neatly using an indelible marker. After the sample is taken and the label is securely attached, the sample is logged into the sample log book.

6.3 CUSTODY SEALS

Custody seals are narrow strips of adhesive tape of glass fiber used to demonstrate that no tampering has occurred. They may be used on sampling equipment, sample transport containers, and individual sample containers. They should be signed and dated by the sampler and placed from one side, across the top, and to the other side of the sample container or across the openings of the sample transport containers.

6.4 CHAIN-OF-CUSTODY PROCEDURES

In order to generate legally defensible data of the samples collected throughout the project, the possession of samples must be traceable from the time the samples are collected until they are introduced as evidence in legal proceedings. To maintain and document sample possession, chain-of-custody procedures are followed as described below:

A sample is under your custody if:

(1) It is in your actual possession, or
(2) It is in your view, after being in your physical possession, or
(3) It was in your physical possession and then you locked it up to prevent tampering, or
(4) It is in a designated secure area

The following information is required on the COC:

(1) Project Name
(2) Project Location- City and State in which the project site is located
(3) Project Number

(4) Project Contact-OHM employee responsible for overseeing the sampling operation. This person should be the individual to whom questions are to be directed or verbal results are given (Project Manager. Site supervisor. or Project Chemist)

(5) Site Telephone Number- The telephone number of on-site office trailer or number where person responsible for samples can be contacted.

(6) Sample Date-Month. Day, Year

(7) Sample Time- Military time

(8) Sample Identification- Sample number and location

(9) Sample Type-Designation of sample as grab or composite

(10) Sample Description- Sample matrix, and a brief description of the sampling location

(11) Sample Preservation- Preservatives used

(12) Analytical Parameters Requested -- Analytical parameter, method numbers, and specific compounds of interest, if applicable.

(13) Air bill Number

(14) Laboratory -- Laboratory where samples are to be sent

(15) Laboratory Phone -- Telephone number of laboratory

(16) Laboratory Contact -- Contact person for laboratory

(17) Relinquished By -- Signature of sender (OHM)

(18) Date Relinquished -- Date samples were relinquished

(19) Accepted By -- Signature of acceptor

(20) Date Received -- Date samples were accepted

(21) Turnaround Time -- Turnaround times requested or date the results are required from the lab

(22) Sampler's Signature -- Signature of sampler

The COC will be sealed in a ziploc bag and taped in place on the underside of the top of the sample transport container (cooler).

7.0 PACKAGING, HANDLING AND SHIPMENT OF SAMPLES

Samples will be packaged as to minimize shifting of the samples during shipment. An absorbent, such as vermiculite or kitty litter, will be placed at the bottom of the shipment container in order to absorb any liquids in the event of sample breakage. All samples will be individually placed into appropriately sized ziploc bags and sealed.

Samples, which must be kept at 4°±2°C, will be shipped on ice in insulated containers. Ice will be placed in a container such as a ziploc bag and sealed so that water will not fill the shipping container as the ice melts. The ice will be double bagged to insure the ice does not leak. Aqueous samples for metals analysis, except hexavalent chromium, shall not be shipped or stored under refrigeration.

Samples will be shipped via an overnight shipping agency to the appropriate laboratory. IATA regulations will be followed as they are more applicable to OHM's method of sample shipment. Instructions for filling out shipment documentation are included in Figure 7.1. These instructions are for shipping samples with unknown or limited hazards. All information will be entered as directed. No changes or substitutions to these instruction will be made irrespective of their significance. A copy of the OHM sample shipping label is included in Figure 7.2.

FIGURE 7.2

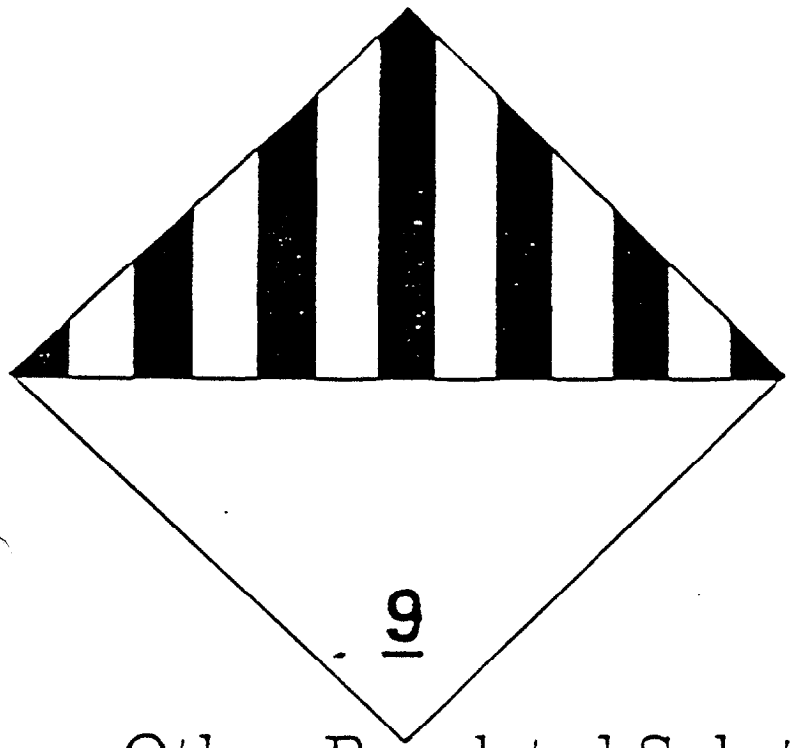

OHM Corporation

From:

Phone:

To:

Phone:

Other Regulated Substances, ID# 8027

Class 9 Shipping Label

OHM Remediation Services Corp.

)HM Remediation Services Corp

Shipping Instruction.)r Sending Samples to the Lab

NOTE: These procedures are <u>ONLY</u> for shipping <u>unknown</u> en)nental samples such as sludge, soil, or water samples for laboratory analysis ... identification; Materials which are known to be explosive, compressed gases, flammable, oxidizers, poisons, radioactive, or corrosive <u>cannot</u> be shipped by this method. Call the Regional T&D Coordinator for help in that case. Drum or tank materials must be shipped as per the Regional T&D Coordinator's instructions.

Cooler lid is taped closed and additional tape should be used around the outside to act as strapping.

OHM custom sample shipping label

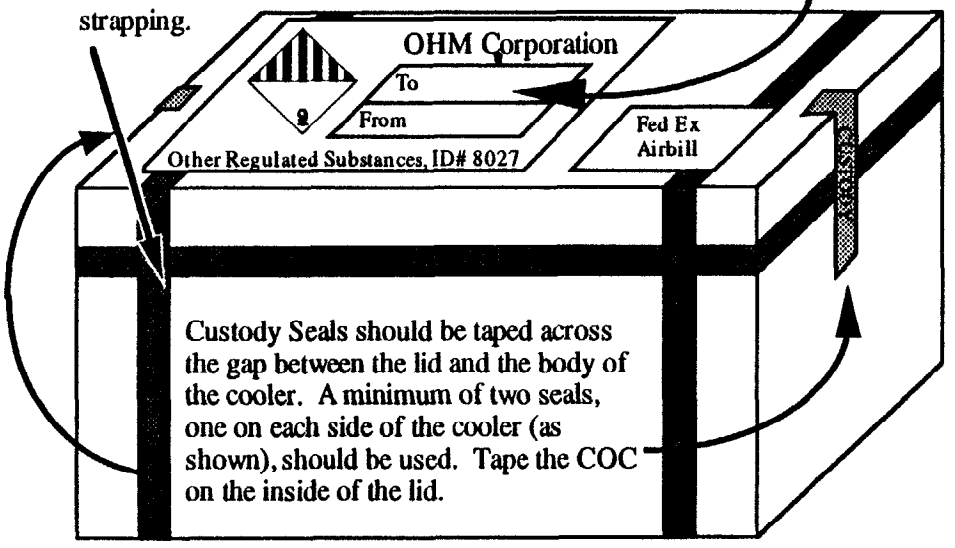

Lower Portion of Fed-Ex DANGEROUS GOODS airbill

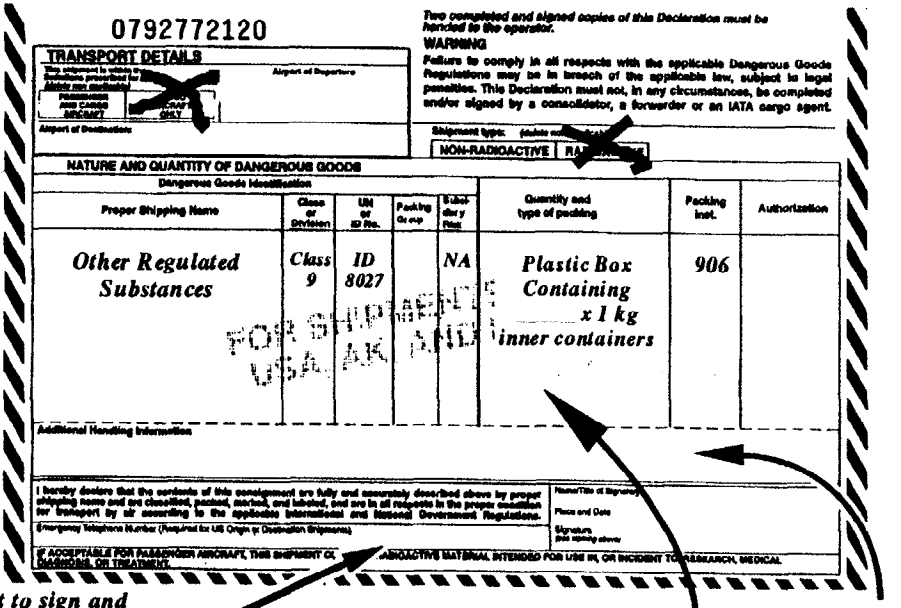

1) Samples must be shipped in "Strong outer packaging". Fed-Ex stated that a rigid plastic cooler like we are currently using would be acceptable.

2) Use one of OHM's custom sample shipping labels. The To/From address portion of the label should be filled out completely including phone numbers. This label should be placed on last and cannot be covered by tape, the Fed-Ex airbill or anything else. This label should go on the TOP of the cooler.

3) Inner packages cannot exceed 1 gallon each, and the entire shipment (cooler & samples) cannot exceed 66 lb.

4) Coolers must be packed with absorbent material (vermiculite or kitty litter) which will absorb any spills or leaks, not react with the sample contents, and which will minimize the chance that inner containers will break. The coolers should also be fastened shut securely using tape or strapping. See the SAP for special instructions.

5) Inner containers should have their lids securly closed and packed in a ziplock baggie to prevent leaks

6) The materials must be shipped using a Federal Express Hazardous Materials Airbill. Use the example above or call the Hazardous Materials group at Federal Express at (800) GO-FEDEX for more instructions on filling out this form.

7) The COC must be filled out completely, placed in a gallon zip-lock baggie, and taped to the inside lid of the cooler. A copy of the COC should be placed behind the airbill in the pouch on the outside of the cooler.

Don't forget to sign and include the <u>24-hr Emergency Response Phone</u> number. Check with the Regional T&D Coordinator for this number

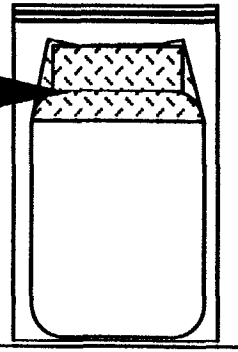

Lids are taped to prevent leaks or loosening. Entire jar is sealed in a zip-lock baggie

Fill in the blank with the number of containers

___ x 1 kg for quart jars
___ x 500 g for 8 oz jars
___ x 40 g for VOA vials

Fill in the Additional Handling space with:

"Samples from OHM Job # _____ see attached chain of custody. In case of emergency refer to ICAO <u>Emergency Response Guidance for Aircraft Incidents Involving Dangerous Goods</u> drill #9A"

READ THE DIRECTIONS ON THE AIRBILL SO YOU UNDERSTAND WHAT YOU ARE FILLING OUT. Fill out the Fed-Ex airbill completely. Don't forget to sign the bottom and include the Emergency Response phone number. Changing even one thing from the example above may mean that Fed-Ex will refuse to accept the shipment. This procedure has been checked-out with Fed-Ex several times. If a driver refuses to pick it up make sure you have filled out the airbill right and followed <u>ALL</u> the instructions before you complain.

APPENDIX D

ENVIRONMENTAL PROTECTION PLAN

ENVIRONMENTAL PROTECTION PLAN
FOR
MAINTENANCE AT RANGES I-1, B-12, AND F-11
MCB CAMP LEJEUNE, NORTH CAROLINA

Prepared for:

DEPARTMENT OF THE NAVY
Contract No. N62470-97-D-5000
Atlantic Division
Naval Facilities Engineering Command
6500 Hampton Boulevard
Building A (South East Wing) 3rd Floor
Norfolk, VA 23508

Prepared by:

OHM Remediation Services Corp.
5445 Triangle Parkway, Suite 400
Norcross, GA 30092

Reviewed by:

_____

James A. Dunn, Jr., P.E.
Senior Project Manager

_____

John P. Franz, P.E.
Program Manager

October 1998
Delivery Order 0017
OHM Project No. 920901

TABLE OF CONTENTS

1.0 INTRODUCTION 1-1

2.0 HISTORICAL AND ARCHAEOLOGICAL FINDS 2-1

3.0 TEMPORARY CONSTRUCTION ROADS 3-1

4.0 PROTECTION OF TREES AND SHRUBS 4-1

5.0 STORM PROTECTION 5-1

6.0 RESTORATION 6-1

7.0 WATER RESOURCES PROTECTION 7-1

- 7.1 EROSION SEDIMENT CONTROL 7-1
- 7.2 SPILL CONTROL 7-1

8.0 DUST AND AIR POLLUTION CONTROL 8-1

- 8.1 AIR AND NOISE MONITORING 8-1
- 8.2 PARTICULATE EMISSION CONTROLS 8-1
- 8.3 BURNING 8-1

9.0 POST-EXCAVATION CLEANUP 9-1

1.0 INTRODUCTION

This Environmental Protection Plan (EPP) has been prepared in accordance with standard OHM policies and procedures. The EPP provides specific information relating to the scope of work under Delivery Order No. 0017, Maintenance at Ranges I-1, B-12, and F-11, MCB Camp Lejeune, North Carolina. The plan will provide site-specific information for:

- Land resources management
- Water resources management
- Air and noise pollution control
- Non-compliance/corrective action
- Post-excavation clean-up

The control of environmental pollution will consider air, water and land impacts, as well as noise and solid waste management. The land resources within the property of Range I-1, B-12, and F-11 at MCB Camp LeJeune, but outside the limits of permanent work, will be preserved in their condition or restored to a condition that does not detract from the appearance of the area after completion of construction. As much as is practical, construction activities will be limited to areas defined by the plans and specifications.

2.0 HISTORICAL AND ARCHAEOLOGICAL FINDS

Although the presence of historical artifacts is not anticipated, if a historical artifact is encountered during field operations, OHM will stop work and notify the Navy Technical Representative (NTR). The NTR will be responsible for contracting federal, state, and local authorities to determine if the site may contain other important historical artifacts, and whether this site qualifies for possible placement on the National Registrar of Historical Places. Field operations will not resume until the NTR issues a written authorization to proceed.

3.0 TEMPORARY CONSTRUCTION ROADS

If required, the construction of any temporary construction roads in and around the project site will be performed in a manner as to minimize the impact to the natural environment. Water will be used for dust control, as necessary.

4.0 PROTECTION OF TREES AND SHRUBS

Prudent steps will be taken to protect trees and shrubs outside of the excavation zone as necessary. OHM will remove the trees and shrubs within the excavation zone. All trees and shrubs removed as a result of the construction activities will be cut into manageable pieces and moved from the project site so as not to interfere with operations. Precautions will be taken to minimize the construction activity impact on existing vegetation and will include but not be limited to:

- Utilization of existing or temporary construction roads only
- Closely supervised equipment operators with an emphasis placed on preservation of vegetation in non-work areas
- Proper guidance of heavy equipment and truck operators by site personnel to minimize damage to adjacent vegetation not directly affected by construction activities
- Utilization of equipment appropriately designed and sized for precise excavation

5.0 STORM PROTECTION

If a warning of gale force winds is issued, OHM will take precautions to minimize any danger to persons, and protect the work and nearby Government property. Precautions shall include removing loose materials, tools, and equipment from exposed locations; and removing or securing temporary work and structures.

6.0 RESTORATION

Upon completion of the field construction activities, disturbed areas will be graded and compacted for proper site drainage. The ground surface will be restored to original conditions.

7.0 *WATER RESOURCES PROTECTION*

The precipitation at the sites drains into the adjacent New River or on of its tributaries. The New River could possibly be impacted by construction activities if proper sediment and erosion protection measures are not taken. To protect against damage, storm water surface run-off leaving the site will be controlled by temporary erosion/sediment control techniques such as berms, silt fencing and grading. The area of bare soil exposed at any one time by construction activities will be minimized.

7.1 EROSION SEDIMENT CONTROL

Prior to disturbance of native vegetation and soils, temporary erosion/sediment control will be established on the down gradient side of each excavation. Control techniques to be utilized will involve silt fencing.

Silt fencing will be installed with the fabric a minimum of 6 inches below grade and extending 36 inches above grade and fastened to posts no more than 6 feet apart. The posts will be installed with a minimum of 24 inches below grade and extend a minimum of 36 inches above grade. Fabric will be attached to the up-slope side of the posts using 1-inch staples or tie wires. Silt fences will be inspected after every rain and daily during extended rainfall. Accumulated sediment will be removed before the depth reaches 12 inches.

7.2 SPILL CONTROL

Measures will be taken to prevent chemicals, fuels, oils, greases, bituminous materials and contaminated materials from entering streams, rivers or lakes. Absorbents will be available to solidify any leaks outside containment and any soil contaminated with fuel spills will be immediately removed and placed into appropriate containers and sampled to determine proper disposition.

8.0 DUST AND AIR POLLUTION CONTROL

8.1 AIR AND NOISE MONITORING

Personnel and ambient air monitoring will be conducted as necessary in order to determine airborne dust and contaminant levels. Ambient air monitoring will be conducted at working locations and on occasion at the perimeter of the project site. This ensures that respiratory protection is adequate to protect personnel against the contaminants that are encountered as well as ensuring that harmful levels of airborne contaminants are not leaving the site.

OHM will only perform operations of heavy equipment during daylight hours to minimize the impact of off-site noise pollution. Noise exposure to off-site residents or personnel is expected to be minimal. Hearing protection for on-site workers will still be implemented if necessary as specified in the SHSP.

8.2 PARTICULATE EMISSION CONTROLS

Specific measures to be taken to minimize particle emissions for major activities during site construction include the following:

Soil Excavation, Handling, Site Grading and Transportation

- Apply water to work and traffic areas as necessary to minimize dust emissions
- Cover stockpiles with sheeting to minimize wind and/or storm water erosion
- Move and load soil for transport within the site that limits free fall of material and is least likely to generate dust emissions
- Halt dust-generating work when on-site wind conditions exceed 35 miles per hour

Movement of Equipment

- Water traffic areas as required to minimize dust emissions
- Designate equipment traffic patterns to minimize travel distance and vehicular dust emissions
- Limit vehicle speed to minimize dust emissions

8.3 BURNING

No burning will be performed on-site. In the event of an expected fire on-site, work will stop immediately and the MCB Camp LeJeune fire department will be notified.

9.0 POST-EXCAVATION CLEANUP

All excavation equipment will be decontaminated prior to demobilizing from the site. Decontamination will consist of scraping and air brushing to remove visible soil and debris from tires and undercarriage of vehicles and heavy equipment. Decontamination fluids if required will be containerized for disposal. The site will then be turned over to the MCB.

APPENDIX E

TRANSPORTATION AND DISPOSAL PLAN

TRANSPORTATION AND DISPOSAL PLAN
FOR
MAINTENANCE AT RANGES I-1, B-12, AND F-11
MCB CAMP LEJEUNE, NORTH CAROLINA

Prepared for:

DEPARTMENT OF THE NAVY
Contract No. N62470-97-D-5000
Atlantic Division
Naval Facilities Engineering Command
6500 Hampton Boulevard
Building A (South East Wing) 3rd Floor
Norfolk, VA 23508

Prepared by:

OHM Remediation Services Corp.
5445 Triangle Parkway, Suite 400
Norcross, GA 30092

Reviewed by:

James A. Dunn, Jr., P.E.
Senior Project Manager

John P. Franz, P.E.
Program Manager

October 1998
Delivery Order 0017
OHM Project No. 920901

TABLE OF CONTENTS

1.0 INTRODUCTION 1-1

2.0 CHARACTERIZATION OF WASTESTREAMS 2-1

3.0 WASTE DISPOSAL APPROVAL 3-1

4.0 PREPARATION OF REQUIRED DOCUMENTATION 4-1

5.0 WASTE PACKAGING 5-1

6.0 SHIPPING 6-1

APPENDICES
APPENDIX A DRUM INVENTORY LOG
APPENDIX B WASTE DISPOSAL ACTIVITIES CHECKLIST

1.0 INTRODUCTION

This Materials Handling, Transportation and Disposal Plan (MHTDP) was prepared for use during maintenance activities at Ranges I-1, B-12 and F-11 which are located within the Marine Corps Base (MCB), Camp Lejeune, North Carolina.

The MHTDP objective is to specify the methods and procedures to be implemented by OHM to ensure that wastes generated during site remediation activities will be transported, stored, treated, and disposed of in full compliance with applicable federal, state, and local rules and regulations.

2.0 CHARACTERIZATION OF WASTESTREAMS

Based on the information provided to OHM in the Statement of Work Design Package, OHM will generate various types of waste during performance of range maintenance activities, which will require recycling, treatment, or disposal. These materials are listed in Table 1. OHM will collect samples and complete characterization and disposal analysis of the waste to be disposed of off-site or recycled in accordance with the Sampling and Analysis Plan. Final characterization and disposal alternatives are contingent upon these analyses. An addendum to this plan will be prepared if required when analyses are available.

Table 1 - Waste Generated During Maintenance Activities at Ranges I-1, B-12, and F-11

Waste	*Description*	*Estimated Quantity*	*Disposal Method*
PPE	Personal protective equipment generated during onsite berm excavation	4 drums – Dispose with construction debris	Subtitle D landfill Base landfill
Decontamination liquids	Decontamination water from equipment cleanup	8 drums	Water treatment plan at Lot 203
Timber with lead	Timber from the demolition of ranges containing high levels of bullet fragments	900 cubic feet	Subtitle C landfill Microencapsulation or macroencapsulation
Bullet fragments	Metal fragments and particles in the excavated range berm soil that will not pass through a 3/16" screen	100 tons	Recycling center
Construction debris	Concrete debris, timber with few bullet fragments, rocks, roots, vegetation, tree branches, and other noncontaminated debris generated during range maintenance	140 tons	Subtitle D landfill Base landfill

All trucks used for transporting material will be decontaminated prior to leaving the project site to prevent the off-site spread of contaminants. Prior to removing the excavation from the range site, OHM will remove residual soils from the excavator by scraping and brushing The excavator will then be moved to the decontamination area for final decontamination by an air brush. Personnel involved with excavation will be attired in Personal Protective Equipment (PPE) as required by the site Health and Safety Plan. Used PPE will be placed in drums for off-site disposal.

All hazardous waste destined for licensed hazardous waste haulers will transport off-site treatment/disposal. All trucks will pre-weigh at the base scales to establish their tare weight prior to being loaded with contaminated soil. After loading and prior to exiting the controlled area, an airbrush will be used to decontaminate the truck tires and trailer sides. The timbers with bullet fragments shall be covers with a tarp or plastic. The trailer will then be weighed at the base scales. Each load will be properly manifested for the designated hazardous waste disposal facility. The Base will be responsible for signing manifests as the generator for each off-Base shipment.

3.0 WASTE DISPOSAL APPROVAL

OHM will assign a Transportation and Disposal (T&D) Coordinator to this project who will report to the Project Manager acting as a single point-of-contact for all waste management activities. The individual assigned to this project will be familiar with all the applicable portions of RCRA, CERCLA, and SARA regulations especially 40 CFR 261 (Identification and Listing of Hazardous Wastes). In addition, this individual will be familiar with the North Carolina regulations relating to hazardous and solid waste handling, treatment, storage, disposal, and transportation. This individual will review the existing analytical data as well as additional data collected by OHM and obtain pre-approval from the appropriate disposal facilities to allow direct load out of excavated soils. The T&D Coordinator will also be responsible for preparing waste profiles to be sent to the selected disposal facilities and coordinating disposal approvals.

Based on the materials identified that will require off-site disposal, the T&D Coordinator, and the project manager and procurement personnel, have reviewed potential vendors to pre-qualify transportation and disposal vendors based on:

- Notice of Violation (NOV) status
- Ability to handle the wastes identified
- Cost effectiveness of the available transportation and disposal options
- Past experience

At this time OHM has identified the following qualified vendors to provide transportation and disposal of wastes from this site:

Disposal

- Browning-Ferris Industries
  Roseboro, North Carolina
- Chemical Waste Management
  Emelle, Alabama
- Evotech Management Services, Inc.
  Belleville, Michigan
- Laidlaw Environmental Services
  Pinewood, South Carolina
- Waste Management
  Kernersville, North Carolina
- Exide Battery
  Laureldale, Pennsylvania

Transportation

- Hilco Transport Inc. (SB, WBE)
  Wilmington, North Carolina
- Robbie D. Wood
  Dolomite, Alabama
- SouthCo Enterprises Inc
  Greensboro, North Carolina
- Terra First
  Jacksonville, FL
- WTI
  Columbia, South Carolina

All bids will be obtained based on a written solicitation and all bid responses will be in writing. All bids will be made in conjunction with OHM's procurement department. A condition of OHM's purchase order will be that the selected vendors must provide OHM with addresses, the name of a single point of contact, EPA ID numbers, permit verification, insurance verification, NOV status, and any other qualifying data necessary.

4.0 PREPARATION OF REQUIRED DOCUMENTATION

OHM will prepare (or oversee the preparation of) all paperwork associated with off-site disposal for review and signature by LANTDIV and Camp Lejeune representatives. This will include TSDF waste profiles, hazardous waste manifests, land disposal restriction (LDR) forms, labels and all other paperwork. The selected vendor(s) will be required to provide all labels, manifests, LDR forms, and other shipping paperwork. A completed example of these forms will be provided for OHM's review and approval at least one week in advance of the scheduled start of shipments. After OHM reviews these documents, they will be provided to the Navy's representative for review and signature. OHM's on-site personnel will receive final copies of all labels, manifests, LDR forms and other shipping paperwork at least 5 days in advance of the scheduled shipment dates.

Written verification that the proposed disposal sites are permitted to accept the contaminated materials specified is required from the disposal vendors with their approvals. A written verification that all vehicles and containers were decontaminated prior to leaving the disposal site will be provided within three days of receipt of the waste materials. A written verification that wastes were actually delivered to the disposal site will be provided within seven days of receipt of waste materials.

5.0 WASTE PACKAGING

All waste personal protective equipment (PPE) will be collected in a roll-off container or 55-gallon (17H open-top) steel drums which will be labeled and logged using OHM's standard drum inventory procedures and Drum Inventory Log included as Appendix A. OHM will maintain these drum logs and a database summary of the type and quantity of wastes generated each day. Appropriate measures will be taken to keep off-site back-up copies of this data as well.

Miscellaneous non-hazardous materials will be accumulated on-site in a roll-off or drums until sufficient quantities are available for shipment of a full load (80 drums or 20-30 cubic yards). OHM will conduct weekly inspections of the waste storage areas. All temporary storage will be in compliance with the applicable North Carolina regulations.

Any decontamination water generated by this project will be stored in drums or storage tanks. OHM plans to transport these liquids via truck to the groundwater treatment plant adjacent to Lot 203 at Camp Lejeune for treatment and discharge.

6.0 SHIPPING

The Site Supervisor will contact the selected vendor and schedule waste pick-ups in a timely manner to coordinate with the project schedule. Prior to shipment of wastes, OHM's on-site personnel, in conjunction with the T&D coordinator, will complete the Waste Disposal Activities Checklist included as Appendix B. This checklist is to be completed for each waste shipment leaving the site. A copy of the completed form will be provided to the NTR prior to waste transportation and with the Contractor's Closeout Report.

OHM will maintain chronological organized files of weight tickets, manifest copies, LDR forms and other shipping paperwork for each shipment. OHM will also maintain a database of all pertinent information regarding each off-site shipment. Copies of the manifest file and database printouts will be provided to the LANTDIV and Camp Lejeune representatives upon request and at the completion of the project.

APPENDIX A

DRUM INVENTORY LOG

OHM Corporation

DRUM INVENTORY LOG

DRUM NO. _____
PROJECT NUMBER _____
PAGE _____ OF _____

PROJECT LOCATION _____ LOGGER _____ DATE _____
PROJECT CONTACT _____ SAMPLER _____ TIME _____
PHONE _____ WEATHER _____

DRUM TYPE: FIBER ☐ POLY-LINED ☐ STEEL ☐ POLY ☐ STAINLESS STEEL ☐ NICKEL ☐
LID TYPE: RINGTOP ☐ CLOSED TOP ☐
DRUM CONDITION: MEET DOT SPEC. ☐ GOOD ☐ FAIR ☐ POOR ☐
DRUM SIZE: 110 ☐ 85 ☐ 55 ☐ 42 ☐ 30 ☐ 16 ☐ 10 ☐ 5 ☐ OTHER ___
DRUM CONTENTS: VOLUME FULL ☐ 3/4 ☐ 1/2 ☐ 1/4 ☐ <1/4 ☐ MT ☐
OVERPACKED: NO ☐ YES ☐ Overpack Type: FIBER ☐ STEEL ☐ POLY ☐

	PHYS. STATE				COLOR	CLARITY			LAYER THICKNESS
LAYERS	LIQUID	SOLID	GEL	SLUDGE	USE STD COLORS	CLEAR	CLOUDY	OPAQUE	INCHES
T									
M									
B									

FIELD ANALYSIS

pH _____ SU PID _____ ppm
DOSIMETER _____
OTHER _____

DRUM LABELS/MARKINGS

DOT HAZ _____ UN/NA _____

MFG NAME _____
CHEMICAL NAME _____
ADDITIONAL INFORMATION _____

LABORATORY COMPATIBILITY DATA

☐ MARK IF PHYSICAL STATE AND COLOR MATCHES THE ABOVE INFORMATION. IF NOT, STOP ANALYSIS AND NOTIFY PROJECT CONTACT. FURTHER WORK WILL NOT BE PAID FOR.

COMPATIBILITY CAT: _____
ANALYSTS: _____
DATE PERFORMED: _____

RADIATION: POS ☐ NEG ☐ _____ MREM/HR

	PHYS. STATE				COLOR	CLARITY			WATER SOL	REACT	pH	HEX. SOL	PER	OXID	CN	SUL	BIEL-STEIN	FLASH POINT	PCBs (25ppm)	PCB TEST COMP
LAYERS	LIQUID	SOLID	GEL	SLUDGE	USE STD COLORS	CLEAR	CLOUDY	OPAQUE	SOLUBILITY SPSI DENSITY H OR L	A=AIR W=WATER	STD. UNIT	S OR I	+ OR −	+ OR −	+ OR −	+ OR −	+ OR −	<60°C + OR −	+ OR −	NUMBER
T																				
M																				
B																				

COMMENTS: _____

PCB CONC. _____ PPM FLASH POINT _____ °C COMPATIBILITY COMP. BULK # _____
DATA REVIEWER: _____ DATA REVIEW DATE: _____
FIELD REVIEWER: _____ FIELD REVIEW DATE: _____

TRANSFER NUMBER	TRANSFERS RELINQUISHED BY	TRANSFERS ACCEPTED BY	DATE	TIME
1				
2				
3				

APPENDIX B

WASTE DISPOSAL ACTIVITIES CHECKLIST

OHM Remediation Services Corp.
A Subsidiary of OHM Corporation

Figure 8-4

Waste Disposal Activities Checklist

Job Name:
Waste Name:
Profile Number: No.
Work Order:

Waste Type:
- ☐ Dry solid
- ☐ Wet Solid / sludge
- ☐ Liquid
- ☐ Other (specify _____)

Shipment Form:
- ☐ Drums (size/type _____)
- ☐ Tankers
- ☐ Dump trailers
- ☐ Rolloffs
- ☐ Other (specify _____)

Estimated Quantity:

Number of Loads:

Disposal Facility:
Address

Phone

EPA ID#

Contacts

Transporter:
Phone

EPA ID#

Contacts

See Attached Pages for:	Checklists Drum labeling instructions (if applicable) Example manifests & LDR forms Drum or container lists Shipping tracking forms Special instructions	The Site Supervisor should review this material and the attached pages prior to performing work.

OHM Remediation Services Corp.
A Subsidiary of OHM Corporation

Waste Disposal Activities Checklist

Notifications, Forms, Manifests & Other Shipping Papers Checklist

Checklist of forms, notifications, manifests and other paperwork associated with various federal, state and facility requirements & regulations. These items will be started by the T&D Coordinator but the Site Supervisor should review each for completion and inclusion with the shipment.

		Checked off / on
☐	Determine if special state manifests are required. (AL. AR, LA, SC & TX in the south)	___/___/___
☐	Verify current manifests are being used? Get current ones if not.	___/___/___
☐	Land Disposal Restriction notification(s)	___/___/___
	☐ Facility LDR form required ☐ YES ☐ NO	
	☐ State LDR form required ☐ YES ☐ NO	
	☐ Current forms available and attached?	
	☐ Background information & data to complete forms	
	☐ Forms completed & reviewed for accuracy	
	☐ Forms signed by OSC/Client?	
	☐ Forms included with material to be sent with shipment (i.e. manifest, etc.)	

☐	Verify information or examples for manifests & labels is compiled & attached.	___/___/___
☐	Prepare manifests & LSR forms, and have them checked for accuracy. (The disposal facility will review and verify the accuracy and completeness of these forms. SEND THEM ADVANCED COPIES!!!)	___/___/___
☐	Prepare drum labels, hazard class labels, & compile list of drum markings required. Labeling instruction sheets attached?	___/___/___
☐	Arrange for client/OSC signatures on manifests & LDR forms	___/___/___

OHM Remediation Services Corp.
A Subsidiary of OHM Corporation

Disposal Facility & Transporter Checklist

Activities conducted by the T&D Coordinator relating to scheduling and transporting waste to disposal facilities. These items will be started by the T&D Coordinator but the Site Supervisor should review each for completion.

		Checked off / on
☐	All approvals in place, or all facilities chosen?	___/___/___
☐	Disposal windows lined up? Facilities have agreed to a specific receipt date, or have agreed to allow transporter to schedule material. Spoke with:_____	___/___/___

☐	Project management informed of final scheduling plans?	___/___/___
☐	Client/OSC informed of final scheduling plans?	___/___/___
☐	Field personnel informed of final scheduling plans?	___/___/___

☐	Three bids obtained for all disposal facility?	___/___/___
☐	Disposal 3-bid approved & signed by client?	___/___/___
☐	PO requisition for disposal completed & submitted?	___/___/___
	Disposal vendor(s) given POs?	___/___/___

☐	Three bids obtained for all transportation?	___/___/___
☐	Transportation 3-bid approved & signed by client?	___/___/___
☐	PO requisition for transportation completed & submitted?	___/___/___
☐	Transportation vendor(s) given POs?	___/___/___

☐ Transporter(s) are clear on the following: ___/___/___

- ☐ Arrival times & dates
- ☐ Delivery times & dates
- ☐ Equipment required
- ☐ Types of trucks expected
- ☐ Directions to site
- ☐ Road & driving conditions at site
- ☐ Site contacts & phone numbers
- ☐ Subs are OK provided OHM informed
- ☐ Billing and contracting details

OHM Remediation Services Corp.
A Subsidiary of OHM Corporation

Drum Checklist

The Site Supervisor should review each of these for completion before loading drums on the truck.

		Checked off / on
☐	Drums have been checked against inventory—there are no extra or missing drums?	___/___/___
☐	Drums are in good shape—or they have been overpacked?	___/___/___
	☐ No leaks?	
	☐ No dents greater than silver dollar size	
	☐ No creases greater than six inches	
	☐ No lid, ring or bung damage	
	☐ No damage to the seams or chimes	
	☐ No waste on the outside of the drum	
	☐ No large discolored areas on the drum	
☐	ALL drums are numbered with the numbers on the top AND side?	___/___/___
☐	ALL drums have a complete waste label—either a yellow & red hazardous waste label or green non-hazardous label?	___/___/___
☐	Drums have hazard class labels (if required) on their tops AND sides?	___/___/___
☐	Drums have approval numbers written on the top AND side?	___/___/___
☐	Drums have the TSDF name written on the side?	___/___/___
☐	If multiple trucks are used, an inventory record of which drums were loaded onto each truck is being made?	___/___/___

OHM Remediation Services Corp.
A Subsidiary of OHM Corporation

Drum Labeling Checklist

The Site Supervisor should review each of these for completion before loading drums on the truck.

Checked off / on

- ☐ Site Supervisor has sufficient quantities of the appropriate drum labels? ____/____/____
  - ☐ Hazardous waste labels (yellow & red)
  - ☐ Non-hazardous labels (green)
  - ☐ Hazard class labels (i.e. flammable liquid, etc.)
    (which _____)
    (_____)

- ☐ Site Supervisor has completed drum labels or has reviewed drum labeling instructions? ____/____/____

- ☐ Information on the drum labels is complete and matches the information on the manifest—This is particularly important; double-check when more than one manifest or truck is being used. Manifest numbers and other information will vary from truck to truck and manifest to manifest. Drum labels must match the specific manifest and the specific truck they are loaded onto. ____/____/____

  - ☐ Generator's name
  - ☐ Generator's address
  - ☐ Generator's EPA ID number
  - ☐ DOT shipping name (Hazardous waste labels only)
  - ☐ EPA waste codes (Hazardous waste labels only)
  - ☐ Manifest number(s) (Hazardous waste labels only)
  - ☐ Accumulation Start Date (Hazardous waste labels only)

OHM Remediation Services Corp.
A Subsidiary of OHM Corporation

Manifest Checklist

Activities conducted by the Site Supervisor relating to manifests, LDR forms and other pre-shipment paperwork.

		Where to Look	Checked off / on
☐	Site Supervisor has sufficient quantities of the appropriate manifests?		___/___/___
☐	Site Supervisor has completed manifests or has reviewed manifest preparation instructions?		___/___/___
☐	Is a unique manifest number assigned to each manifest?	Section 1.	___/___/___
☐	Generator, Transporter, and Disposal facility information (including EPA ID numbers, addresses, & phone numbers) complete & accurate—does it match sample manifests or manifest preparation instructions?	Sections 3-9 & A-H	___/___/___
☐	DOT description complete & accurate?	Section 11, lines a-d	___/___/___
☐	Number of containers, quantities, units complete and accurate? Have the correct abbreviations been used?	Sections 12-14, lines a-d	___/___/___
☐	"Additional Description" section (including approval numbers and work order numbers) is complete & accurate?	Section J	___/___/___
☐	"Handling Codes" section (including emergency response guidebook codes) is complete & accurate?	Section K	___/___/___
☐	"Special Handling" section (including emergency phone number, and other special instructions) is complete & accurate?	Section 15.	___/___/___
☐	Client has signed manifest?	Section 16.	___/___/___
☐	Transporter has signed manifest?	Section 17.	___/___/___
☐	OHM has retained last page or a copy of manifest for our records?		___/___/___

☐	LDR form is complete & included with manifest?	___/___/___
☐	LDR form has been signed by client?	___/___/___