M67001.AR.001517
MCB CAMP LEJEUNE
5090.3a

FINAL REMEDIAL INVESTIGATION REPORT FOR HADNOT POINT INDUSTRIAL AREA OPERABLE UNIT SHALLOW SOILS AND CASTLE HAYNE AQUIFER CHARACTERIZATION STUDY TO DETERMINE EXISTENCE AND POSSIBLE MIGRATION OF SPECIFIC CHEMICALS IN SITU VOLUME 3 OF 3 MCB CAMP LEJEUNE NJ

4/1/1992

ENVIRONMENTAL SCIENCE AND ENGINEERING INC

03.13-04/01/92-~~00114~~
01517

FINAL
REMEDIAL INVESTIGATION REPORT
FOR HADNOT POINT INDUSTRIAL AREA
OPERABLE UNIT
SHALLOW SOILS AND
CASTLE HAYNE AQUIFER
CHARACTERIZATION STUDY TO DETERMINE
EXISTENCE AND POSSIBLE MIGRATION
OF SPECIFIC CHEMICALS IN SITU

VOLUME 3

MARINE CORPS BASE
Camp Lejeune, North Carolina

Contract No. N62470-83-C-6106

Prepared for:

NAVAL FACILITIES ENGINEERING COMMAND
Atlantic Division

APRIL 1992

Prepared by:

ENVIRONMENTAL SCIENCE AND ENGINEERING, INC.
Orlando, Florida

4902036-0150

DRAFT FINAL
REMEDIAL INVESTIGATION REPORT
FOR HADNOT POINT INDUSTRIAL AREA

CHARACTERIZATION STUDY TO DETERMINE EXISTENCE AND POSSIBLE MIGRATION OF SPECIFIC CHEMICALS IN SITU

VOLUME 3

MARINE CORPS BASE
Camp Lejeune, North Carolina

Contract No. N62470-83-C-6106

Prepared for:

NAVAL FACILITIES ENGINEERING COMMAND
Atlantic Division

DECEMBER 1991

Prepared by:

ENVIRONMENTAL SCIENCE AND ENGINEERING, INC.
Orlando, Florida

4902036-0150

TABLE OF CONTENTS

Section	Title	Page
	EXECUTIVE SUMMARY	
1.0	**INTRODUCTION**	
	1.1 Purpose of Report	1-1
	1.2 Site Background, Location, and Description	1-2
	1.2.1 MCB Camp Lejeune	1-2
	1.2.2 Hadnot Point Industrial Area	1-2
	1.3 RI Approach and Scope	1-3
	1.4 Report Organization	1-4
2.0	**SUMMARY OF INVESTIGATIONS**	
	2.1 Verification Step	2-2
	2.2 Characterization Step	2-2
	2.3 Supplemental Characterization	2-3
	2.4 Other Investigations	2-3
3.0	**SITE INVESTIGATION**	
	3.1 Record Search	3-1
	3.2 Soil Investigation	3-2
	3.2.1 Soil Gas Survey	3-2
	3.2.2 Data Analysis	3-4
	3.2.3 Soil Borings	3-4

TABLE OF CONTENTS
(Continued)

Section	Title	Page
	3.3 Groundwater Investigation	3-6
	3.3.1 Monitor Wells	3-6
	3.3.2 Monitor Well Development	3-12
	3.3.3 Groundwater Sampling	3-18
	3.3.4 Water Level Measurements	3-19
	3.3.5 Well Location and Elevation Survey	3-19
	3.4 Pump Testing	3-19
	3.5 Quality Assurance/Quality Control	3-20
4.0	**PHYSICAL CHARACTERIZATION OF STUDY AREA**	
	4.1 Topography and Surface Water Drainage	4-1
	4.2 Geology	4-2
	4.2.1 Regional Geology	4-2
	4.2.2 Hadnot Point Industrial Area Geology	4-3
	4.3 Hydrology	4-4
	4.3.1 Regional Hydrology	4-4
	4.3.2 Hadnot Point Industrial Area Hydrology	4-5
	4.3.3 Hydraulic Gradients	4-8
	4.3.4 Hydraulic Conductivity	4-10
	4.4 Meterology	4-10
5.0	**RESULTS OF INVESTIGATION**	
	5.1 Records Search	5-1
	5.2 Soils Investigation	5-2
	5.2.1 Soil Gas Survey	5-2
	5.2.2 Soil Borings	5-6
	5.3 Groundwater Investigation	5-10
	5.3.1 Shallow Aquifer	5-15
	5.3.2 Deep Aquifer	5-27

TABLE OF CONTENTS
(Continued)

Section	Title	Page
	5.4 QA/QC Samples	5-37
	5.5 Castle Hayne Aquifer Pump Test	5-40
	5.5.1 Well Construction	5-41
	5.5.2 Pump Test Procedures	5-42
	5.5.3 Pump Test Analysis Methods	5-43
	5.5.4 Pump Test Conclusions	5-44
6.0	**SUMMARY AND CONCLUSIONS**	
	6.1 Records Search	6-1
	6.2 Soil Investigation	6-1
	6.2.1 Soil Gas Survey	6-1
	6.2.2 Soil Sampling and Analytical Results	6-2
	6.3 Groundwater Investigation	6-4
	6.3.1 Monitor Well Installation	6-4
	6.3.2 Groundwater Sampling	6-4
	6.3.3 Analytical Results	6-5
	6.4 Aquifer Testing	6-8
	6.5 Geohydrology	6-9
	REFERENCES	
	APPENDICES (under Separate Cover)	

LIST OF TABLES

Table	Title	Page
3-1	Hadnot Point Groundwater Field Measurements Summary	3-15
3-2	QA/QC Sample Summary	3-23
4-1	Hadnot Point Water Levels (1/25/91)	4-6
4-2	Hadnot Point Water Levels (2/20/91)	4-7
5-1	Comparison of Analytical Results - Hits Only Shallow Groundwater Monitoring Wells	5-11
5-2	Detected Target Analytes - Characterization Investigation - Water Supply Wells	5-32
5-3	Detected Target Analytes - Supplemental Characterization Investigation - Water Supply Wells	5-34
5-4	Water Supply Wells Construction Detail	5-35

LIST OF FIGURES

Figure	Title	Following Page
1-1	Camp Lejeune Location Map	1-2
1-2	Hadnot Point Industrial Area	1-2
1-3	Other Study Sites Adjacent to HPIA	1-3
2-1	Monitor Wells and Water Supply Wells at Hadnot Point Industrial Area - Confirmatory Study	2-3
3-1	Approximate Soil Boring Locations - Bldg. 902	3-4
3-2	Approximate Soil Boring Locations - Bldg. 1202	3-4
3-3	Approximate Soil Boring Locations - Bldg. 1602	3-4
3-4	New and Existing Monitor Wells at Hadnot Point Industrial Area	3-6
4-1	Surface Water Drainage Subbasins at Hadnot Point, Camp Lejeune	4-1
4-2	Water Quality Classifications for New River, Camp Lejeune	4-2
4-3	Geologic and Hydrogeologic Units in the Coastal Plain of North Carolina	4-3
4-4	Generalized Hydrogeologic Cross-Section - Jones and Onslow Counties, North Carolina	4-4
4-5	Generalized Cross-Section of Hadnot Point Industrial Area	4-4
4-6	Potentiometric Surface - Shallow Wells (2-20-91)	4-5
4-7	Potentiometric Surface - Intermediate Wells (2-20-91)	4-8
4-8	Potentiometric Surface - Deep Wells (2-20-91)	4-8

LIST OF FIGURES
(Continued)

Figure	Title	Following Page
4-9	Regional Climatic Conditions at Camp Lejeune	4-11
5-1	Soil Gas Findings--Bldgs. 901, 902, and 903 - Confirmatory Study	5-3
5-2	Soil Gas Findings--Bldgs. 1101, 1102, 1202, 1300, 1301, and 1302 - Confirmatory Study	5-4
5-3	Soil Gas Findings--Bldgs. 1502, 1601, and 1602 - Confirmatory Study	5-5
5-4	Total VOC Isopleth Map - Shallow Aquifer, Confirmatory Study, Hadnot Point Industrial Area	5-15
5-5	Total VOC Isopleth Map - Shallow Aquifer, Supplemental Confirmatory Study, Hadnot Point Industrial Area	5-15

LIST OF ACRONYMS AND ABBREVIATIONS

CERCLA	Comprehensive Environmental Response, Compensation, and Liability Act
cm/sec	centimeters per second
DPDO	Defense Property Disposal Office
DRMO	Defense Reutilization and Marketing Office
EPA	U.S. Environmental Protection Agency
ESE	Environmental Science and Engineering, Inc.
ft	feet
ft/day	feet per day
ft^2/day	square feet per day
ft BLS	feet below land surface
ft/ft	feet per foot
gal	gallons
GC	gas chromatograph
GC/MS	gas chromatography/mass spectrometry
gpd/ft	gallons per day per foot
gpm	gallons per minute
gpm/ft	gallons per minute per foot
HPIA	Hadnot Point Industrial Area
IAS	Initial Assessment Study
ID	inside diameter
LANTDIV	Naval Facilities Engineering Command, Atlantic Division
MCL	Maximum Contaminant Level

LIST OF ACRONYMS AND ABBREVIATIONS
(Continued, 2 of 2)

MDL	method detection limit
MEK	methylethylketone
mmHg	millimeters of mercury
NEESA	Naval Energy and Environmental Support Activity
O&G	oil and grease
OD	outside diameter
1,1-DCA	1,1-dichloroethane
1,2-DCA	1,2-dichloroethane
1,2-DCE	1,2-dichloroethene
PCB	polychlorinated biphenyl
POL	petroleum, oil, and lubricant
ppb	parts per billion
PVC	polyvinyl chloride
RI/FS	Remedial Investigation/Feasibility Study
SARA	Superfund Amendments and Reauthorization Act
TCE	trichloroethene
TCL	toxic contaminant List (volatile, semi-volatile, pesticides, metals)
TIC	tentatively identified compound
ug/L	microgram per liter
USGS	U.S. Geological Survey
VOC	volatile organic compound

APPENDIX F

QA/QC SAMPLES
ANALYTICAL RESULTS

CAMP LEJEUNE - HPIA

INORGANICS IN QA/QC SAMPLES

Concentration in ug/l (Field Blank and D.I. Water Blank)

Concentration in mg/kg (Mud Blank)

CHART = QAQCING1 wp8e\qhp-inor.wr1 (1)

METAL/COMPOUND	MB-001	FB-001	DI-001	DI-002	DI-005
Aluminum	21,811.76	126B	23.0U	20.7U	20.7U
Antimony	140.00U	22.0U	22.0U	13.3U	13.3U
Arsenic	21.059U	1.8U	1.8U	1.5U	1.5U
Barium	123.53	1.2B	2.4B	1.7U	4.0B
Beryllium	10.59U	2.1U	2.1U	0.50U	0.50U
Cadmium	0.00U	4.3U	4.3U	4.3U	4.3U
Calcium	122708.95	16400	241B	314B	510B
Chromium	0.00U	5.2U	5.2B	1.5U	1.5U
Cobalt	36.47U	6.4U	6.4U	6.0U	6.0U
Copper	0.00U	3.9B	5.4B	10.7B	9.0B
Iron	28118.35	154	144	85.4B	72.9B
Lead	53.03	1.0U	1.0U	1.7U	1.7U
Magnesium	8541.39	1660B	66.5B	81.5B	70.3B
Manganese	610.60	3.2B	4.6B	1.2U	1.8B
Mercury	0.00U	0.10U	0.10U	0.10U	0.10U
Nickel	0.00U	11.0U	11.0U	4.8	5.2U
Potassium	6116.62	1440B	446U	343U	481B
Selenium	17.18U	1.6U	1.6U	3.4U	3.4U
Silver	4.71U	6.2U	6.2B	1.6U	1.6U
Sodium	13282.68	8240	614B	6.8U	908B
Thallium	0.00U	1.1U	1.1U	4.4U	4.4U
Vanadium	14.12U	4.3U	4.3U	2.4U	2.4U
Zinc	222.36	18.2B	11.0B	21.4	46.8
Cyanide	0.00U	10.0U	10.0U	10.0U	10.0U

PROJECT Camp Lejeune

PREPARED BY Judy Yuma

DATE April 1991

CHECKED BY E C Kimbell

DATE 5/14/91

COMMENTS

CAMP LEJEUNE - HPIA

PESTICIDES IN QA/QC SAMPLES

Concentration in ug/l (Field Blank and D.I. Water Blanks)

Concentration in ug/kg (Mud blank)

CHART = QAQCHPP1 sy\wp8d\qhp-pest.wr1 (1)

PESTICIDE/PCB	MB-001	FB-001	DI-001	DI-002	DI-005
alpha-BHC	600.U	.05U	.05U	.05U	.05U
beta-BHC	600.U	.05U	.05U	.05U	.05U
delta-BHC	600.U	.05U	.05U	.05U	.05U
gamma-BHC (Lindane)	600.U	.05U	.05U	.05U	.05U
Heptachlor	600.U	.05U	.05U	.05U	.05U
Aldrin	54.BJ	.05U	.05U	.05U	.05U
Heptachlor epoxide	600.U	.05U	.05U	.05U	.05U
Endosulfan I	600.U	.05U	.05U	.05U	.05U
Dieldrin	150.BJ	.10U	.10U	.10U	.10U
4,4'-DDE	1200.U	.10U	.10U	.10U	.10U
Endrin	1200.U	.10U	.10U	.10U	.10U
Endosulfan II	1200.U	.10U	.10U	.10U	.10U
4,4'-DDD	1200.U	.10U	.10U	.10U	.10U
Endosulfan sulfate	1200.U	.10U	.10U	.10U	.10U
4,4'-DDT	1200.U	.10U	.10U	.10U	.10U
Methoxychlor	6000.U	.50U	.50U	.50U	.50U
Endrin ketone	1200.U	.10U	.10U	.10U	.10U
alpha-Chlordane	6000.U	.50U	.50U	.50U	.50U
gamma-Chlordane	6000.U	.50U	.50U	.50U	.50U
Toxaphene	12000.U	1.0U	1.0U	1.0U	1.0U
Aroclor-1016	6000.U	.50U	.50U	.50U	.50U
Aroclor-1221	6000.U	.50U	.50U	.50U	.50U
Aroclor-1232	6000.U	.50U	.50U	.50U	.50U
Aroclor-1242	6000.U	.50U	.50U	.50U	.50U
Aroclor-1248	6000.U	.50U	.50U	.50U	.50U
Aroclor-1254	12000.U	1.0U	1.0U	1.0U	1.0U
Aroclor-1260	12000.U	1.0U	1.0U	1.0U	1.0U

PROJECT Camp Lejeune

PREPARED BY Judy Shuma

DATE April 1991

CHECKED BY E.O. Knapp

DATE 5/13/91

COMMENTS

CAMP LEJEUNE - HPIA
PESTICIDES IN QA/QC SAMPLES
Concentration in ug/l

CHART = QAQCHPP2 sy\wp8d\qhp-pest.wr1 (2)

PESTICIDE/PCB	EB-001	EB-002	EB-003	EB-004	EB-005	EB-008	EB-011	EB-013
alpha-BHC	.05U	.05U	0.050U	0.050U	0.050U	0.050U	0.050U	.05U
beta-BHC	.05U	.05U	0.050U	0.050U	0.050U	0.050U	0.050U	.05U
delta-BHC	.05U	.05U	0.050U	0.050U	0.050U	0.050U	0.050U	.05U
gamma-BHC (Lindane)	.05U	.05U	0.050U	0.050U	0.050U	0.050U	0.050U	.05U
Heptachlor	.05U	.05U	0.050U	0.050U	0.050U	0.050U	0.050U	.05U
Aldrin	.05U	.05U	0.050U	0.050U	0.050U	0.050U	0.050U	.05U
Heptachlor epoxide	.05U	.05U	0.050U	0.050U	0.050U	0.050U	0.050U	.05U
Endosulfan I	.05U	.05U	0.050U	0.050U	0.050U	0.050U	0.050U	.05U
Dieldrin	.10U	.10U	0.10U	0.10U	0.10U	0.10U	0.10U	.10U
4,4'-DDE	.10U	.10U	0.10U	0.10U	0.10U	0.10U	0.10U	.10U
Endrin	.10U	.10U	0.10U	0.10U	0.10U	0.10U	0.10U	.10U
Endosulfan II	.10U	.10U	0.10U	0.10U	0.10U	0.10U	0.10U	.10U
4,4'-DDD	.10U	.10U	0.10U	0.10U	0.10U	0.10U	0.10U	.10U
Endosulfan sulfate	.10U	.10U	0.10U	0.10U	0.10U	0.10U	0.10U	.10U
4,4'-DDT	.10U	.10U	0.10U	0.10U	0.10U	0.10U	0.10U	.10U
Methoxychlor	.50U	.50U	0.50U	0.50U	0.50U	0.50U	0.50U	.50U
Endrin ketone	.10U	.10U	0.10U	0.10U	0.10U	0.10U	0.10U	.10U
alpha-Chlordane	.50U	.50U	0.50U	0.50U	0.50U	0.50U	0.50U	.50U
gamma-Chlordane	.50U	.50U	0.50U	0.50U	0.50U	0.50U	0.50U	.50U
Toxaphene	1.0U	1.0U	1.0U	1.0U	1.0U	1.0U	1.0U	1.0U
Aroclor-1016	.50U	.50U	0.50U	0.50U	0.50U	0.50U	0.50U	.50U
Aroclor-1221	.50U	.50U	0.50U	0.50U	0.50U	0.50U	0.50U	.50U
Aroclor-1232	.50U	.50U	0.50U	0.50U	0.50U	0.50U	0.50U	.50U
Aroclor-1242	.50U	.50U	0.50U	0.50U	0.50U	0.50U	0.50U	.50U
Aroclor-1248	.50U	.50U	0.50U	0.50U	0.50U	0.50U	0.50U	.50U
Aroclor-1254	1.0U	1.0U	1.0U	1.0U	1.0U	1.0U	1.0U	1.0U
Aroclor-1260	1.0U	1.0U	1.0U	1.0U	1.0U	1.0U	1.0U	1.0U

CAMP LEJEUNE - HPIA
PESTICIDES IN QA/QC SAMPLES
Concentration in ug/l

CHART = QAQCHPP3 sy\wp8d\qhp-pest.wr1 (3)

PESTICIDE/PCB	EB-006	EB-007	EB-010
alpha-BHC	0.050U	0.050U	0.050U
beta-BHC	0.050U	0.050U	0.050U
delta-BHC	0.050U	0.050U	0.050U
gamma-BHC (Lindane)	0.050U	0.050U	0.050U
Heptachlor	0.050U	0.050U	0.050U
Aldrin	0.050U	0.050U	0.050U
Heptachlor epoxide	0.050U	0.050U	0.050U
Endosulfan I	0.050U	0.050U	0.050U
Dieldrin	0.10U	0.10U	0.10U
4,4'-DDE	0.10U	0.10U	0.10U
Endrin	0.10U	0.10U	0.10U
Endosulfan II	0.10U	0.10U	0.10U
4,4'-DDD	0.10U	0.10U	0.10U
Endosulfan sulfate	0.10U	0.10U	0.10U
4,4'-DDT	0.10U	0.10U	0.10U
Methoxychlor	0.50U	0.50U	0.50U
Endrin ketone	0.10U	0.10U	0.10U
alpha-Chlordane	0.50U	0.50U	0.50U
gamma-Chlordane	0.50U	0.50U	0.50U
Toxaphene	1.0U	1.0U	1.0U
Aroclor-1016	0.50U	0.50U	0.50U
Aroclor-1221	0.50U	0.50U	0.50U
Aroclor-1232	0.50U	0.50U	0.50U
Aroclor-1242	0.50U	0.50U	0.50U
Aroclor-1248	0.50U	0.50U	0.50U
Aroclor-1254	1.0U	1.0U	1.0U
Aroclor-1260	1.0U	1.0U	1.0U

PROJECT Camp Lejeune
PREPARED BY Gary Lynn
DATE April 1991
CHECKED BY [illegible]
DATE 5/8/91
COMMENTS

CAMP LEJEUNE - HPIA

SEMI-VOLATILE ORGANIC COMPOUNDS IN QA/QC SAMPLES

Concentration in ug/l (Field Blank and D.I. Water Blanks)

Concentration in ug/kg (Mud Blank)

CHART = QACHPS1A

wp8c\qhp-sv.wr1 (1-A)

COMPOUND	MB-001	FB-001	DI-001	DI-002	DI-005
Phenol	39000.U	10.U	10.U	10.U	10.U
bis(2-Chloroethyl)ether	39000.U	10.U	10.U	10.U	10.U
2-Chlorophenol	39000.U	10.U	10.U	10.U	10.U
1,3-Dichlorobenzene	39000.U	10.U	10.U	10.U	10.U
1,4-Dichlorobenzene	39000.U	10.U	10.U	10.U	10.U
Benzyl Alcohol	39000.U	10.U	10.U	10.U	10.U
1,2-Dichlorobenzene	39000.U	10.U	10.U	10.U	10.U
2-Methylphenol	39000.U	10.U	10.U	10.U	10.U
bis(2-Chloroisopropyl)ether	39000.U	10.U	10.U	10.U	10.U
4-Methylphenol	39000.U	10.U	10.U	10.U	10.U
N-Nitroso-di-n-propylamine	39000.U	10.U	10.U	10.U	10.U
Hexachloroethane	39000.U	10.U	10.U	10.U	10.U
Nitrobenzene	39000.U	10.U	10.U	10.U	10.U
Isophorone	39000.U	10.U	10.U	10.U	10.U
2-Nitrophenol	39000.U	10.U	10.U	10.U	10.U
2,4-Dimethylphenol	39000.U	10.U	10.U	10.U	10.U
Benzoic acid	200000.BJ	50.U	50.U	50.U	50.U
bis(2-Chloroethoxy)methane	39000.U	10.U	10.U	10.U	10.U
2,4-Dichlorophenol	39000.U	10.U	10.U	10.U	10.U
1,2,4-Trichlorobenzene	39000.U	10.U	10.U	10.U	10.U
Naphthalene	39000.U	10.U	10.U	10.U	10.U
4-Chloroaniline	39000.U	10.U	10.U	10.U	10.U
Hexachlorobutadiene	39000.U	10.U	10.U	10.U	10.U
4-Chloro-3-methylphenol	39000.U	10.U	10.U	10.U	10.U
2-Methylnaphthalene	39000.U	10.U	10.U	10.U	10.U
Hexachlorocyclopentadiene	39000.U	10.U	10.U	10.U	10.U
2,4,6-Trichlorophenol	39000.U	10.U	10.U	10.U	10.U
2,4,5-Trichlorophenol	200000.BJ	50.U	50.U	50.U	50.U
2-Chloronaphthalene	39000.U	10.U	10.U	10.U	10.U
2-Nitroaniline	200000.BJ	50.U	50.U	50.U	50.U
Dimethylphthalate	39000.U	10.U	10.U	10.U	10.U
Acenaphthylene	39000.U	10.U	10.U	10.U	10.U
2,6-Dinitrotoluene	39000.U	10.U	10.U	10.U	10.U

PROJECT Camp Lejeune

PREPARED BY Judy Kuma

DATE April 1991

CHECKED BY [illegible]

DATE 5/10/91

COMMENTS

CAMP LEJEUNE - HPIA

SEMI-VOLATILE ORGANIC COMPOUNDS IN QA/QC SAMPLES

Concentration in ug/l (Field Blank and D.I. Water Blanks)

Concentration in ug/kg (Mud Blank)

CHART = QACHPS1B wp8c\qhp-sv.wr1 (1-B)

COMPOUND	MB-001	FB-001	DI-001	DI-002	DI-005
3-Nitroaniline	200000.U	50.U	50.U	50.U	50.U
Acenaphthene	39000.U	10.U	10.U	10.U	10.U
2,4-Dinitrophenol	200000.U	50.U	50.U	50.U	50.U
4-Nitrophenol	5100.J	50.U	50.U	50.U	50.U
Dibenzofuran	39000.U	10.U	10.U	10.U	10.U
2,4-Dinitrotoluene	39000.U	10.U	10.U	10.U	10.U
Diethylphthalate	39000.U	10.U	10.U	10.U	10.U
4-Chlorophenyl-phenylether	39000.U	10.U	10.U	10.U	10.U
Fluorene	39000.U	10.U	10.U	10.U	10.U
4-Nitroaniline	200000.U	50.U	50.U	50.U	50.U
4,6-Dinitro-2-methylphenol	200000.U	50.U	50.U	50.U	50.U
N-Nitrosodiphenylamine	39000.U	10.U	10.U	10.U	10.U
4-Bromophenyl-phenylether	39000.U	10.U	10.U	10.U	10.U
Hexachlorobenzene	39000.U	10.U	10.U	10.U	10.U
Pentachlorophenol	200000.U	50.U	50.U	50.U	50.U
Phenanthrene	39000.U	10.U	10.U	10.U	10.U
Anthracene	39000.U	10.U	10.U	10.U	10.U
Di-n-butylphthalate	39000.U	10.U	10.U	10.U	10.U
Fluoranthene	39000.U	10.U	10.U	10.U	10.U
Pyrene	1400.J	10.U	10.U	10.U	10.U
Butylbenzylphthalate	61000.	10.U	10.U	10.U	10.U
3,3'-Dichlorobenzidine	78000.	20.U	20.U	20.U	20.U
Benzo(a)anthracene	39000.U	10.U	10.U	10.U	10.U
Chrysene	39000.U	10.U	10.U	10.U	10.U
bis(2-Ethylhexyl)phthalate	200000.BJ	10.U	10.U	10.U	10.U
Di-n-octylphthalate	39000.U	10.U	10.U	10.U	10.U
Benzo(b)fluoranthene	39000.U	10.U	10.U	10.U	10.U
Benzo(k)fluoranthene	39000.U	10.U	10.U	10.U	10.U
Benzo(a)pyrene	39000.U	10.U	10.U	10.U	10.U
Indeno(1,2,3-cd)pyrene	39000.U	10.U	10.U	10.U	10.U
Dibenz(a,h)anthracene	39000.U	10.U	10.U	10.U	10.U
Benzo(g,h,i)perylene	39000.U	10.U	10.U	10.U	10.U

CAMP LEJEUNE - HPIA

SEMI-VOLATILE ORGANIC COMPOUNDS IN QA/QC SAMPLES

Concentration in ug/l

CHART = QACHPS2A wp8c\qhp-sv.wr1 (2-A)

COMPOUND	EB-001	EB-002	EB-003	EB-004	EB-005	EB-008	EB-011	EB-013
Phenol	10.U	10.U	10U	10U	10U	10U	10U	10.U
bis(2-Chloroethyl)ether	10.U	10.U	10U	10U	10U	10U	10U	10.U
2-Chlorophenol	10.U	10.U	10U	10U	10U	10U	10U	10.U
1,3-Dichlorobenzene	10.U	10.U	10U	10U	10U	10U	10U	10.U
1,4-Dichlorobenzene	10.U	10.U	10U	10U	10U	10U	10U	10.U
Benzyl Alcohol	10.U	10.U	10U	10U	10U	10U	10U	10.U
1,2-Dichlorobenzene	10.U	10.U	10U	10U	10U	10U	10U	10.U
2-Methylphenol	10.U	10.U	10U	10U	10U	10U	10U	10.U
bis(2-Chloroisopropyl)ether	10.U	10.U	10U	10U	10U	10U	10U	10.U
4-Methylphenol	10.U	10.U	10U	10U	10U	10U	10U	10.U
N-Nitroso-di-n-propylamine	10.U	10.U	10U	10U	10U	10U	10U	10.U
Hexachloroethane	10.U	10.U	10U	10U	10U	10U	10U	10.U
Nitrobenzene	10.U	10.U	10U	10U	10U	10U	10U	10.U
Isophorone	10.U	10.U	10U	10U	10U	10U	10U	10.U
2-Nitrophenol	10.U	10.U	10U	10U	10U	10U	10U	10.U
2,4-Dimethylphenol	10.U	10.U	10U	10U	10U	10U	10U	10.U
Benzoic acid	50.U	50.U	50U	50U	50U	50U	50U	50.U
bis(2-Chloroethoxy)methane	10.U	10.U	10U	10U	10U	10U	10U	10.U
2,4-Dichlorophenol	10.U	10.U	10U	10U	10U	10U	10U	10.U
1,2,4-Trichlorobenzene	10.U	10.U	10U	10U	10U	10U	10U	10.U
Naphthalene	10.U	10.U	10U	10U	10U	10U	10U	10.U
4-Chloroaniline	10.U	10.U	10U	10U	10U	10U	10U	10.U
Hexachlorobutadiene	10.U	10.U	10U	10U	10U	10U	10U	10.U
4-Chloro-3-methylphenol	10.U	10.U	10U	10U	10U	10U	10U	10.U
2-Methylnaphthalene	10.U	10.U	10U	10U	10U	10U	10U	10.U
Hexachlorocyclopentadiene	10.U	10.U	10U	10U	10U	10U	10U	10.U
2,4,6-Trichlorophenol	10.U	10.U	10U	10U	10U	10U	10U	10.U
2,4,5-Trichlorophenol	50.U	50.U	50U	50U	50U	50U	50U	50.U
2-Chloronaphthalene	10.U	10.U	10U	10U	10U	10U	10U	10.U
2-Nitroaniline	50.U	50.U	50U	50U	50U	50U	50U	50.U
Dimethylphthalate	10.U	10.U	10U	10U	10U	10U	10U	10.U
Acenaphthylene	10.U	10.U	10U	10U	10U	10U	10U	10.U
2,6-Dinitrotoluene	10.U	10.U	10U	10U	10U	10U	10U	10.U

CAMP LEJEUNE - HPIA

SEMI-VOLATILE ORGANIC COMPOUNDS IN QA/QC SAMPLES

Concentration in ug/l

CHART = QACHPS2B wp8c\hp-sv.wr1 (2-B)

COMPOUND	EB-001	EB-002	EB-003	EB-004	EB-005	EB-008	EB-011	EB-013
3-Nitroaniline	50.U	50.U	50U	50U	50U	50U	50U	50.U
Acenaphthene	10.U	10.U	10U	10U	10U	10U	10U	10.U
2,4-Dinitrophenol	50.U	50.U	50U	50U	50U	50U	50U	50.U
4-Nitrophenol	50.U	50.U	50U	50U	50U	50U	50U	50.U
Dibenzofuran	10.U	10.U	10U	10U	10U	10U	10U	10.U
2,4-Dinitrotoluene	10.U	10.U	10U	10U	10U	10U	10U	10.U
Diethylphthalate	10.U	10.U	10U	10U	10U	10U	10U	10.U
4-Chlorophenyl-phenylether	10.U	10.U	10U	10U	10U	10U	10U	10.U
Fluorene	10.U	10.U	10U	10U	10U	10U	10U	10.U
4-Nitroaniline	50.U	50.U	50U	50U	50U	50U	50U	50.U
4,6-Dinitro-2-methylphenol	50.U	50.U	50U	50U	50U	50U	50U	50.U
N-Nitrosodiphenylamine	10.U	10.U	10U	10U	10U	10U	10U	10.U
4-Bromophenyl-phenylether	10.U	10.U	10U	10U	10U	10U	10U	10.U
Hexachlorobenzene	10.U	10.U	10U	10U	10U	10U	10U	10.U
Pentachlorophenol	50.U	50.U	50U	50U	50U	50U	50U	50.U
Phenanthrene	10.U	10.U	10U	10U	10U	10U	10U	10.U
Anthracene	10.U	10.U	10U	10U	10U	10U	10U	10.U
Di-n-butylphthalate	10.U	10.U	10U	10U	10U	10U	10U	10.U
Fluoranthene	10.U	10.U	10U	10U	10U	10U	10U	10.U
Pyrene	10.U	10.U	10U	10U	10U	10U	10U	10.U
Butylbenzylphthalate	10.U	10.U	10U	10U	10U	10U	10U	10.U
3,3'-Dichlorobenzidine	20.U	20.U	20U	20U	20U	20U	20U	20.U
Benzo(a)anthracene	10.U	10.U	10U	10U	10U	10U	10U	10.U
Chrysene	10.U	10.U	10U	10U	10U	10U	10U	10.U
bis(2-Ethylhexyl)phthalate	10.U	10.U	10U	10U	10U	10U	10U	10.U
Di-n-octylphthalate	10.U	10.U	10U	10U	10U	10U	10U	10.U
Benzo(b)fluoranthene	10.U	10.U	10U	10U	10U	10U	10U	10.U
Benzo(k)fluoranthene	10.U	10.U	10U	10U	10U	10U	10U	10.U
Benzo(a)pyrene	10.U	10.U	10U	10U	10U	10U	10U	10.U
Indeno(1,2,3-cd)pyrene	10.U	10.U	10U	10U	10U	10U	10U	10.U
Dibenz(a,h)anthracene	10.U	10.U	10U	10U	10U	10U	10U	10.U
Benzo(g,h,i)perylene	10.U	10.U	10U	10U	10U	10U	10U	10.U

CAMP LEJEUNE - HPIA

VOLATILE ORGANIC COMPOUNDS IN MUD BLANKS, FIELD BLANKS, and D.I. WATER BLANKS

Concentration in ug/l (Field and D.I. Water Blanks)

Concentration in ug/kg (Mud Blank)

CHART = QAQCHPV1 wp8b\qhp-vol.wr1 (1)

COMPOUND	MB-001	FB-001	DI-001	DI-002	DI-005
Chloromethane	590.U	10.U	10.U	10.U	10.U
Bromomethane	590.U	10.U	10.U	10.U	10.U
Vinyl Chloride	590.U	10.U	10.U	10.U	10.U
Chloroethane	590.U	10.U	10.U	10.U	10.U
Methylene Chloride	1500.	.8J	5.U	5.U	2.J
Acetone	2200.	10.U	10.U	10.U	10.U
Carbon Disulfide	290.U	5.U	5.U	5.U	5.U
1,1-Dichloroethene	290.U	5.U	5.U	5.U	5.U
1,1-Dichloroethane	290.U	5.U	5.U	5.U	5.U
1,2-Dichloroethene (total)	290.U	5.U	5.U	5.U	5.U
Chloroform	600.	7.	5.U	5.U	5.U
1,2-Dichloroethane	290.U	5.U	5.U	5.U	5.U
2-Butanone	590.U	10.U	10.U	10.U	10.U
1,1,1-Trichloroethane	290.U	5.U	5.U	5.U	5.U
Carbon Tetrachloride	290.U	5.U	5.U	5.U	5.U
Vinyl Acetate	590.U	10.U	10.U	10.U	10.U
Bromodichloromethane	190.J	7.	5.U	5.U	5.U
1,2-Dichloropropane	290.U	5.U	5.U	5.U	5.U
cis-1,3-Dichloropropene	290.U	5.U	5.U	5.U	5.U
Trichloroethene	51.J	5.U	5.U	5.U	5.U
Dibromochloromethane	100.J	5.J	5.U	5.U	5.U
1,1,2-Trichloroethane	290.U	5.U	5.U	5.U	5.U
Benzene	430.	5.U	5.U	5.U	5.U
trans-1,3-Dichloropropene	290.U	5.U	5.U	5.U	5.U
Bromoform	290.U	5.U	5.U	5.U	5.U
4-Methyl-2-Pentanone	590.U	10.U	10.U	10.U	10.U
2-Hexanone	590.U	10.U	10.U	10.U	10.U
Tetrachloroethene	290.U	5.U	5.U	5.U	5.U
1,1,2,2-Tetrachloroethane	290.U	5.U	5.U	5.U	5.U
Toluene	4100.	5.U	5.U	5.U	5.U
Chlorobenzene	56.J	5.U	5.U	5.U	5.U
Ethylbenzene	1700.	5.U	5.U	5.U	5.U
Styrene	290.U	5.U	5.U	5.U	5.U
Xylene (total)	7400.	5.U	5.U	5.U	5.U

PROJECT Camp Lejeune

PREPARED BY Judy Lynn

DATE April 1991

CHECKED BY Ed Knight

DATE 5/13/91

CAMP LEJEUNE - HPIA

VOLATILE ORGANIC COMPOUNDS IN EQUIPMENT BLANKS

Concentration in ug/l

CHART = QAQCHPV2 wp8b\qhp-vol.wr1 (2)

COMPOUND	EB-001	EB-002	EB-003	EB-004	EB-005	EB-006	EB-007	EB-008
Chloromethane	10.U	10U	10U	10U	10U	3J	10U	2J
Bromomethane	10.U	10U	10U	10U	10U	10U	10U	10U
Vinyl Chloride	10.U	10U	10U	10U	10U	10U	10U	10U
Chloroethane	10.U	10U	10U	10U	10U	10U	10U	10U
Methylene Chloride	5.U	5U	4J	3J	2BJ	5U	3BJ	5
Acetone	10.U	10U	17	10U	12B	10U	8BJ	12B
Carbon Disulfide	5.U	5U	1J	5U	4J	5U	5U	5
1,1-Dichloroethene	5.U	5U	5U	5U	5U	5U	5U	5U
1,1-Dichloroethane	5.U	5U	5U	5U	5U	5U	5U	5U
1,2-Dichloroethene (total)	5.U	5U	5U	5U	5U	5U	5U	5U
Chloroform	5.U	5U	5U	5U	5U	5U	5U	5U
1,2-Dichloroethane	5.U	5U	5U	5U	5U	5U	5U	5U
2-Butanone	10.U	10U	10U	10U	10U	10U	10U	10U
1,1,1-Trichloroethane	5.U	5U	5U	5U	5U	5U	5U	5U
Carbon Tetrachloride	5.U	5U	5U	5U	5U	5U	5U	5U
Vinyl Acetate	10.U	10U	10U	10U	10U	10U	10U	10U
Bromodichloromethane	5.U	5U	5U	5U	5U	5U	5U	5U
1,2-Dichloropropane	5.U	5U	5U	5U	5U	5U	5U	5U
cis-1,3-Dichloropropene	5.U	5U	5U	5U	5U	5U	5U	5U
Trichloroethene	5.U	5U	5U	5U	5U	5U	5U	5U
Dibromochloromethane	5.U	5U	5U	5U	5U	5U	5U	5U
1,1,2-Trichloroethane	5.U	5U	5U	5U	5U	5U	5U	5U
Benzene	5.U	5U	5U	5U	5U	5U	5U	5U
trans-1,3-Dichloropropene	5.U	5U	5U	5U	5U	5U	5U	5U
Bromoform	5.U	5U	5U	5U	5U	5U	5U	5U
4-Methyl-2-Pentanone	10.U	10U	10U	10U	10U	10U	10U	10U
2-Hexanone	10.U	10U	10U	10U	10U	10U	10U	2J
Tetrachloroethene	5.U	5U	5U	5U	5U	5U	5U	5U
1,1,2,2-Tetrachloroethane	5.U	5U	5U	5U	5U	5U	5U	5U
Toluene	5.U	5U	5U	5U	5U	5U	5U	5U
Chlorobenzene	5.U	5U	5U	5U	5U	5U	5U	5U
Ethylbenzene	5.U	5U	5U	5U	5U	5U	5U	5U
Styrene	5.U	5U	5U	5U	5U	5U	5U	5U
Xylene (total)	5.U	5U	5U	5U	5U	5U	5U	5U

CAMP LEJEUNE - HPIA

VOLATILE ORGANIC COMPOUNDS IN EQUIPMENT BLANKS

Concentration in ug/l

CHART = QAQCHPV3 wp8b\qhp-vol.wr1 (3)

COMPOUND	EB-010	EB-011	EB-013	EB-017
Chloromethane	10U	10U	10.U	10U
Bromomethane	10U	10U	10.U	10U
Vinyl Chloride	10U	10U	10.U	10U
Chloroethane	10U	10U	10.U	10U
Methylene Chloride	2BJ	5U	5.U	6B
Acetone	5BJ	9J	10.U	13
Carbon Disulfide	5U	5U	5.U	1J
1,1-Dichloroethene	5U	5U	5.U	5U
1,1-Dichloroethane	5U	5U	5.U	5U
1,2-Dichloroethene (total)	5U	5U	5.U	5U
Chloroform	5U	5U	5.U	5U
1,2-Dichloroethane	5U	5U	5.U	5U
2-Butanone	10U	10U	10.U	10U
1,1,1-Trichloroethane	5U	5U	5.U	5U
Carbon Tetrachloride	5U	5U	5.U	5U
Vinyl Acetate	10U	10U	10.U	10U
Bromodichloromethane	5U	5U	5.U	5U
1,2-Dichloropropane	5U	5U	5.U	5U
cis-1,3-Dichloropropene	5U	5U	5.U	5U
Trichloroethene	5U	5U	5.U	5U
Dibromochloromethane	5U	5U	5.U	5U
1,1,2-Trichloroethane	5U	5U	5.U	5U
Benzene	5U	5U	3.J	5U
trans-1,3-Dichloropropene	5U	5U	5.U	5U
Bromoform	5U	5U	5.U	5U
4-Methyl-2-Pentanone	10U	10U	10.U	10U
2-Hexanone	10U	10U	10.U	10U
Tetrachloroethene	5U	5U	5.U	5U
1,1,2,2-Tetrachloroethane	5U	5U	5.U	5U
Toluene	5U	5U	10.	5U
Chlorobenzene	5U	5U	5.U	5U
Ethylbenzene	5U	5U	2.J	5U
Styrene	5U	5U	5.U	5U
Xylene (total)	5U	5U	10.	5U

PROJECT Camp Lejeune

PREPARED BY Molly Yuma

DATE April 1991

CHECKED BY SD Kuykendall

DATE 5/8/91

COMMENTS

CAMP LEJEUNE - HPIA

VOLATILE ORGANIC COMPOUNDS IN TRIP BLANKS

Concentration in ug/l

CHART = QAQCHPV4 wp8b\qhp-vol.wr1 (4)

COMPOUND	TB-001	TB-002	TB-003	TB-004	TB-005	TB-006	TB-009	TB-010
Chloromethane	10.U	10.U	10.U	10.U	10.U	10.U	10.U	10.U
Bromomethane	10.U	10.U	10.U	10.U	10.U	10.U	10.U	10.U
Vinyl Chloride	10.U	10.U	10.U	10.U	10.U	10.U	10.U	10.U
Chloroethane	10.U	10.U	10.U	10.U	10.U	10.U	10.U	10.U
Methylene Chloride	5.U	5.U	5.U	5.U	5.U	4.J	5.U	5.U
Acetone	10.U	10.U	10.U	10.U	10.U	10.U	4.BJ	10.U
Carbon Disulfide	5.U	5.U	5.U	5.U	5.U	8.	5.U	5.U
1,1-Dichloroethene	5.U	5.U	5.U	5.U	5.U	5.U	5.U	5.U
1,1-Dichloroethane	5.U	5.U	5.U	5.U	5.U	5.U	5.U	5.U
1,2-Dichloroethene (total)	5.U	5.U	.7J	5.U	5.U	5.U	5.U	5.U
Chloroform	5.U	5.U	5.U	5.U	5.U	5.U	5.U	5.U
1,2-Dichloroethane	5.U	5.U	5.U	5.U	5.U	5.U	5.U	5.U
2-Butanone	10.U	10.U	10.U	10.U	10.U	10.U	10.U	10.U
1,1,1-Trichloroethane	5.U	5.U	5.U	5.U	5.U	5.U	5.U	5.U
Carbon Tetrachloride	5.U	5.U	5.U	5.U	5.U	5.U	5.U	5.U
Vinyl Acetate	10.U	10.U	10.U	10.U	10.U	10.U	10.U	10.U
Bromodichloromethane	5.U	5.U	5.U	5.U	5.U	5.U	5.U	5.U
1,2-Dichloropropane	5.U	5.U	5.U	5.U	5.U	5.U	5.U	5.U
cis-1,3-Dichloropropene	5.U	5.U	5.U	5.U	5.U	5.U	5.U	5.U
Trichloroethene	5.U	5.U	5.U	5.U	5.U	5.U	5.U	5.U
Dibromochloromethane	5.U	5.U	5.U	5.U	5.U	5.U	5.U	5.U
1,1,2-Trichloroethane	5.U	5.U	5.U	5.U	5.U	5.U	5.U	5.U
Benzene	5.U	5.U	5.U	5.U	5.U	5.U	5.U	5.U
trans-1,3-Dichloropropene	5.U	5.U	5.U	5.U	5.U	5.U	5.U	5.U
Bromoform	5.U	5.U	5.U	5.U	5.U	5.U	5.U	5.U
4-Methyl-2-Pentanone	10.U	10.U	10.U	10.U	10.U	10.U	10.U	10.U
2-Hexanone	10.U	10.U	10.U	10.U	10.U	10.U	10.U	10.U
Tetrachloroethene	5.U	5.U	5.U	5.U	5.U	5.U	5.U	5.U
1,1,2,2-Tetrachloroethane	5.U	5.U	5.U	5.U	5.U	5.U	5.U	5.U
Toluene	5.U	5.U	5.U	5.U	5.U	5.U	5.U	5.U
Chlorobenzene	5.U	5.U	5.U	5.U	5.U	5.U	5.U	5.U
Ethylbenzene	5.U	5.U	5.U	5.U	5.U	5.U	5.U	5.U
Styrene	5.U	5.U	5.U	5.U	5.U	5.U	5.U	5.U
Xylene (total)	5.U	5.U	5.U	5.U	5.U	5.U	5.U	5.U

CAMP LEJEUNE - HPIA

VOLATILE ORGANIC COMPOUNDS IN TRIP BLANKS

Concentration in ug/l

CHART = QAQCHPV5 wp8b\qhp-vol.wr1 (5)

COMPOUND	TB-011	TB-012	TB-013	TB-015
Chloromethane	10.U	10.U	10.U	10.U
Bromomethane	10.U	10.U	10.U	10.U
Vinyl Chloride	10.U	10.U	10.U	10.U
Chloroethane	10.U	10.U	10.U	10.U
Methylene Chloride	5.U	5.U	5.U	5.U
Acetone	10.U	10.U	10.U	12.
Carbon Disulfide	5.U	5.U	5.U	5.U
1,1-Dichloroethene	5.U	5.U	5.U	5.U
1,1-Dichloroethane	5.U	5.U	5.U	5.U
1,2-Dichloroethene (total)	5.U	5.U	5.U	5.U
Chloroform	5.U	5.U	5.U	5.U
1,2-Dichloroethane	5.U	5.U	5.U	5.U
2-Butanone	10.U	10.U	10.U	10.U
1,1,1-Trichloroethane	5.U	5.U	5.U	5.U
Carbon Tetrachloride	5.U	5.U	5.U	5.U
Vinyl Acetate	10.U	10.U	10.U	10.U
Bromodichloromethane	5.U	5.U	5.U	5.U
1,2-Dichloropropane	5.U	5.U	5.U	5.U
cis-1,3-Dichloropropene	5.U	5.U	5.U	5.U
Trichloroethene	5.U	5.U	5.U	5.U
Dibromochloromethane	5.U	5.U	5.U	5.U
1,1,2-Trichloroethane	5.U	5.U	5.U	5.U
Benzene	5.U	5.U	5.U	5.U
trans-1,3-Dichloropropene	5.U	5.U	5.U	5.U
Bromoform	5.U	5.U	5.U	5.U
4-Methyl-2-Pentanone	10.U	10.U	10.U	10.U
2-Hexanone	10.U	10.U	10.U	10.U
Tetrachloroethene	5.U	5.U	5.U	5.U
1,1,2,2-Tetrachloroethane	5.U	5.U	5.U	5.U
Toluene	5.U	3.J	5.U	5.U
Chlorobenzene	5.U	5.U	5.U	5.U
Ethylbenzene	5.U	5.U	5.U	5.U
Styrene	5.U	5.U	5.U	5.U
Xylene (total)	5.U	5.U	5.U	5.U

PROJECT Camp Lejeune

PREPARED BY Judy Guma

DATE April 1991

CHECKED BY [illegible]

DATE 5/14/91

CAMP LEJEUNE - HPIA

VOLATILE ORGANIC COMPOUNDS IN EQUIPMENT BLANK

Concentration in ug/L

CHART = SOIL-EB

COMPOUND	EB017
Chloromethane	10U
Bromomethane	10U
Vinyl Chloride	10U
Chloroethane	10U
Methylene Chloride	6B
Acetone	13
Carbon Disulfide	1J
1,1-Dichloroethene	5U
1,1-Dichloroethane	5U
1,2-Dichloroethene (total)	5U
Chloroform	5U
1,2-Dichloroethane	5U
2-Butanone	10U
1,1,1-Trichloroethane	5U
Carbon Tetrachloride	5U
Vinyl Acetate	10U
Bromodichloromethane	5U
1,2-Dichloropropane	5U
cis-1,3-Dichloropropene	5U
Trichloroethene	5U
Dibromochloromethane	5U
1,1,2-Trichloroethane	5U
Benzene	5U
trans-1,3-Dichloropropene	5U
Bromoform	5U
4-Methyl-2-Pentanone	10U
2-Hexanone	10U
Tetrachloroethene	5U
1,1,2,2-Tetrachloroethane	5U
Toluene	5U
Chlorobenzene	5U
Ethylbenzene	5U
Styrene	5U
Total Xylenes	5U

PROJECT Camp Lejeune

PREPARED BY [illegible]

DATE May 1991

CHECKED BY [illegible]

DATE 5/16/91

COMMENTS

CAMP LEJEUNE - HPIA
PESTICIDES IN EPA SOIL SPIKE SAMPLES
Concentration in ug/kg

CHART = SOIL-PEP

PESTICIDE/PCB	EPA-3 SOSP03 SOIL SPIKE	EPA-4 SOSP04 SOIL SPIKE
alpha-BHC	8.9U	8.7U
beta-BHC	8.9U	8.7U
delta-BHC	8.9U	8.7U
gamma-BHC (Lindane)	8.9U	8.7U
Heptachlor	8.9U	8.7U
Aldrin	8.9U	8.7U
Heptachlor epoxide	8.9U	8.7U
Endosulfan I	8.9U	8.7U
Dieldrin	18U	17U
4,4'-DDE	18U	17U
Endrin	18U	17U
Endosulfan II	18U	17U
4,4'-DDD	18U	17U
Endosulfan sulfate	18U	17U
4,4'-DDT	18U	17U
Methoxychlor	89U	87U
Endrin ketone	18U	17U
alpha-Chlordane	89U	87U
gamma-Chlordane	89U	87U
Toxaphene	180U	170U
Aroclor-1016	89U	87U
Aroclor-1221	89U	87U
Aroclor-1232	89U	87U
Aroclor-1242	89U	87U
Aroclor-1248	89U	87U
Aroclor-1254	180U	170U
Aroclor-1260	180U	170U

PROJECT Camp Lejeune
PREPARED BY Ed Knypel
DATE 5/91
CHECKED BY Judy Gunn
DATE 5-21-91

CAMP LEJEUNE - HPIA

TCLP METALS IN EPA SOIL SPIKE SAMPLES

Concentration in ug/l

CHART = EPASOIL-I

TCLP METALS	EPA-3 SOSP03 soil spike
Arsenic	98.00B*
Barium	95.00BE
Cadmium	3.00U
Chromium	10.00B
Lead	36.00B
Mercury	0.20U
Selenium	100.00B
Silver	4.00U

PROJECT Camp Lejeune

PREPARED BY Judy Guma

DATE May 1 1991

CHECKED BY E.O. Knypl

DATE 5/21/91

COMMENTS

APPENDIX G

QA/QC
DISCUSSION OF RESULTS

Environmental
Science &
Engineering, Inc.

April 22, 1991

Environmental Science
& Engineering
201 Route 17 North
Rutherford, NJ 07070

The purpose of this letter is to present you with the results of my examination of the field QC sample results for Camp Lejeune. You may recall that earlier this month, you asked me to summarize the results for all field blanks, equipment blanks, trip blanks and field duplicates that were generated for this project. You asked that this information be compiled not only for ESE's water analysis data but also for those field QC samples that were analyzed by CEIMIC. This effort has been completed, and the attached tables contain the extracted field QC data as taken from the data packages generated by ESE and CEIMIC. In the paragraphs below I will present my observations as to the significance of the values seen in this data.

Equipment Blanks

The water equipment blanks did not show significant levels of contamination for any analyte except for iron. This is not unexpected since iron is a ubiquitous element in the environment, and could have come from the sampling equipment. There was one equipment blank (EB-001) that showed a relatively high concentration of iron, and a small amount of cyanide. Zinc showed up once in blank EB-009, which is also not surprising, since it too is a ubiquitous element in nature, and is an occasional laboratory contaminant at trace levels. All blanks were free of detectable levels of organics except for one that had low levels of toluene and xylenes.

The soil equipment blanks showed a wider range of metals present, with cadmium, iron and zinc predominant. There was a notable value for sodium reported in blank EB-011. This is well above what might be expected for possible laboratory contamination, and its presence in the absence of any other target analytes is puzzling. Blank EB-012 seemed to have the highest number of metal contaminants, and the highest concentrations as well. Again, it appears that there was no organic contamination present in the blanks. The values for acetone, methylene chloride and carbon disulfide that are reported for the two blanks are very near the detection limits. In addition, acetone and methylene chloride are ubiquitous laboratory contaminants, and I would closely examine the laboratory VOA's blanks for the presence of these compounds before I would describe the presence of these analytes in the blank a result of field operations.

Trip Blanks

These field QC samples were only generated for water samples, and are analyzed only for volatiles. Only three trip blanks showed values above the detection limits for GC/MS volatiles analysis, and all analysis results were very close to the method's detection limits. The value for acetone is just over twice the method's detection limit for that analyte, and you should be aware that since it is a common laboratory contaminant, the CLP protocol allows laboratory blank values to be up to five (5) times the detection limit before the laboratory has to take corrective action. In general, these blanks look very clean.

7330 South Alton Way, Suite N Englewood, CO 80112-2319 Phone (303) 741-0639 Fax (303) 793-0954

Formerly known as Hunter/ESE, Inc.

.I. Blanks

These field QC samples were only generated for water samples only, and were collected each time a new batch of deionized water was received by the field team. Analysis of this water showed low levels of zinc and iron for only three of these blanks. No other inorganic or organic target analytes were found in these samples.

Field Blanks

Field blanks were only generated for water analysis, and came from the potable water supply that was used for general cleaning/support operations in the field. Only one field blank was generated, and both organic and inorganic analyses were performed on this sample. There were substantial amounts of calcium, iron and sodium present in the blank, and trace levels of chloroform and bromodichloromethane. These last two organics are common materials in municipal water supplies, and are formed as a result of the chlorination of water to kill bacteria.

Sample Duplicates

Sample duplicate data has been summarized for both the water (ESE) and soil analyses (CHEIMIC). The water values show an astonishing variety in the analysis results between pairs of duplicate samples. In some cases (eg. sample HPGW12 and it's duplicate) there is a tremendous variability between the two analysis results. For other samples (eg. sample HPGW-4 and it's duplicate) the agreement between the two samples is excellent.

The only explanation for this variability in the water analyses comes from a physical inspection of the water samples themselves. In most cases where there is a substantial difference between the two analyses, there is a substantial difference in the amount of sediment contained in the two samples. For some duplicate pairs, one sample will be very cloudy and murky and the other sample will be crystal clear. Whenever both samples of the duplicate pairs were relatively clear and free of suspended sediment, the duplicate sample analyses results showed good agreement.

The soil analysis results are about what is expected for the analysis of soil matrices. The high variability seen between water duplicates is not present, but shows the same RPD values from sample to sample. The RPD's are in the 40% to 80% range for a number of analytes, which would be unacceptable for water analyses but are not unexpected when dealing with typical non-uniform environmental soils.

This completes my review of field QC data that is available to me for this project. I assume that there are samples in the data set that are field spikes or reference materials that have been submitted to the laboratories as blind field spikes, but of course I have no information available that allows me to evaluate the accuracy and precision of the analysis results for these samples. I hope that this review and my comments are useful to you, and if you have any questions on this matter please call me at your earliest convenience.

Sincerely,

Kenneth E. Dahlin

Kenneth E. Dahlin
Quality Assurance Supervisor

D.I. Blanks

These field QC samples were only generated for water samples only, and were collected each time a new batch of deionized water was received by the field team. Analysis of this water showed low levels of zinc and iron for only three of these blanks. No other inorganic or organic target analytes were found in these samples.

Field Blanks

Field blanks were only generated for water analysis, and came from the potable water supply that was used for general cleaning/support operations in the field. Only one field blank was generated, and both organic and inorganic analyses were performed on this sample. There were substantial amounts of calcium, iron and sodium present in the blank, and trace levels of chloroform and bromodichloromethane. These last two organics are common materials in municipal water supplies, and are formed as a result of the chlorination of water to kill bacteria.

Sample Duplicates

Sample duplicate data has been summarized for both the water (ESE) and soil analyses (CHEIMIC). The water values show an astonishing variety in the analysis results between pairs of duplicate samples. In some cases (eg. sample HPGW12 and it's duplicate) there is a tremendous variability between the two analysis results. For other samples (eg. sample HPGW-4 and it's duplicate) the agreement between the two samples is excellent.

The only explanation for this variability in the water analyses comes from a physical inspection of the water samples themselves. In most cases where there is a substantial difference between the two analyses, there is a substantial difference in the amount of sediment contained in the two samples. For some duplicate pairs, one sample will be very cloudy and murky and the other sample will be crystal clear. Whenever both samples of the duplicate pairs were relatively clear and free of suspended sediment, the duplicate sample analyses results showed good agreement.

The soil analysis results are about what is expected for the analysis of soil matrices. The high variability seen between water duplicates is not present, but shows the same RPD values from sample to sample. The RPD's are in the 40% to 80% range for a number of analytes, which would be unacceptable for water analyses but are not unexpected when dealing with typical non-uniform environmental soils.

This completes my review of field QC data that is available to me for this project. I assume that there are samples in the data set that are field spikes or reference materials that have been submitted to the laboratories as blind field spikes, but of course I have no information available that allows me to evaluate the accuracy and precision of the analysis results for these samples. I hope that this review and my comments are useful to you, and if you have any questions on this matter please call me at your earliest convenience.

Sincerely,

Kenneth E. Dahlin

Kenneth E. Dahlin
Quality Assurance Supervisor

ATTACHMENTS

EQUIPMENT BLANKS

The following contaminants were found in the equipment blanks analyzed by ESE.

INORGANIC ANALYSIS

Sample ID	Analyte	Conc. UG/L
EB-001	Iron	888.0
	Cyanide	15.0
EB-002	Iron	145.0
EB-009	Iron	119.0
	Zinc	58.0

ORGANIC ANALYSIS

Sample ID	Analyte	Conc. UG/L
EB-013	Toluene	10.0
	Xylene(T)	10.0

The following contaminants were found in the equipment blank analyzed by CEIMIC.

INORGANIC ANALYSIS

Sample ID	Analyte	Conc. UG/L
EB-003	Cadmium	5.0
	Zinc	20.0
EB-004	Cadmium	6.0
	Iron	174.0
	Zinc	24.0
EB-005	Cadmium	5.0
	Iron	119.0
	Zinc	23.0
EB-008	Cadmium	11.0
	Iron	208.0
	Zinc	28.0
EB-011	Sodium	401000.0
EB-012	Beryllium	5.0
	Chromium	12.0
	Iron	356.0
	Nickel	73.0
	Zinc	1210.0

ORGANIC ANALYSIS

Sample ID	Analyte	Conc. UG/L
EB-003	Acetone	17.0
EB-008	Methylene Chloride	5.0
	Carbon Disulfide	5.0

TRIP BLANKS

The following contaminants were found in the trip blanks analyzed by ESE.

ORGANIC ANALYSIS

Sample ID	Analyte	Conc. UG/L
TB-002	1,2 Dichloro-ethene (T)	7.0
TB-006	Carbon Disulfide	8.0
TB-015	Acetone	12.0

DI BLANKS

The following contaminants were found in the DI blanks analyzed by ESE.

INORGANIC ANALYSIS

Sample ID	Analyte	Conc. UG/L
DI-001	Iron	144.0
DI-002	Zinc	21.4
DI-005	Zinc	46.8

FIELD BLANKS

The following contaminants were found in the field blanks analyzed by ESE.

INORGANIC ANALYSIS

Sample ID	Analyte	Conc. UG/L
FB-001	Calcium	16400.0
	Iron	154.0
	Sodium	8240.0

ORGANIC ANALYSIS

Sample ID	Analyte	Conc. UG/L
FB-001	Chloroform	7.0
	Bromodichloro-methane	7.0

SAMPLE DUPLICATE
ESE

Sample ID	HPGW12	GWDUP2	
	Sample	Dup.	
	Conc.	Conc.	RPD
Analyte	UG/L[1]	UG/L	%[2]
Aluminum	24000.00	2110.00	167.7
Antimony	U 22.0	U 22.0	----
Arsenic	U 1.80	U 1.80	----
Barium	91.50	46.30	65.6
Beryllium	U 2.10	U 2.10	----
Cadmium	U 4.30	U 4.30	----
Calcium	34100.0	170000.0	133.2
Chromium	25.50	U 5.20	----
Cobalt	6.40	U 6.40	----
Copper	5.90	3.20	59.3
Iron	5600.00	100.00	193.0
Lead	15.70	U 1.00	----
Magnesium	7700.00	119.00	193.9
Manganese	18.30	U 1.80	----
Mercury	U 0.10	U 0.10	----
Nickel	U 11.0	U 11.0	----
Potassium	2600.00	5280.00	68.0
Selenium	5.80	U 1.60	----
Silver	U 6.20	U 6.20	----
Sodium	9310.00	6560.00	34.7
Thallium	U 1.10	U 1.10	----
Vanadium	31.10	6.60	130.0
Zinc	46.60	44.60	4.4
Cyanide	U 10.0	U 10.0	----

Sample ID	HPGW9-3	GWDUP3	
	Sample	Dup.	
	Conc.	Conc.	RPD
Analyte	UG/L	UG/L	%
Aluminum	2200.00	19000.00	158.5
Antimony	U 22.0	U 22.0	----
Arsenic	U 1.80	2.40	----
Barium	49.10	88.80	57.6
Beryllium	U 2.10	U 2.10	----
Cadmium	U 4.30	U 4.30	----
Calcium	120000.0	33200.0	113.3
Chromium	U 5.20	25.60	----
Cobalt	U 6.40	8.40	----
Copper	4.60	12.20	90.5
Iron	149.00	4490.00	187.2
Lead	U 1.00	12.30	----
Magnesium	131.00	7700.00	193.3
Manganese	U 1.80	17.10	----
Mercury	U 0.10	U 0.10	----
Nickel	U 11.0	U 11.0	----
Potassium	5540.00	2990.00	59.8
Selenium	U 1.60	4.00	----
Silver	U 6.20	U 6.20	----
Sodium	6440.00	7040.00	8.9
Thallium	U 1.10	U 1.10	----
Vanadium	7.30	28.80	119.1
Zinc	38.60	40.40	4.6
Cyanide	U 10.0	U 10.0	----

Sample ID	HPGW30-2 Sample Conc.	GWDUP4 Dup. Conc.	RPD
Analyte	UG/L	UG/L	%
Aluminum	1860.00	1830.00	1.6
Antimony	U 13.3	U 13.3	----
Arsenic	U 1.50	U 1.50	----
Barium	28.70	19.00	40.7
Beryllium	0.61	0.61	0.0
Cadmium	U 4.30	U 4.30	----
Calcium	138000.0	132000.0	4.4
Chromium	4.90	7.00	35.3
Cobalt	U 6.00	U 6.00	----
Copper	7.30	11.20	42.2
Iron	4950.00	4850.00	2.0
Lead	5.00	6.20	21.4
Magnesium	2350.00	2260.00	3.9
Manganese	51.10	49.00	4.2
Mercury	U 0.10	U 0.10	----
Nickel	U 5.20	U 5.20	----
Potassium	7180.00	7230.00	0.7
Selenium	U 3.40	U 3.40	----
Silver	U 1.60	U 1.60	----
Sodium	18600.00	215000.0	168.2
Thallium	U 4.40	U 4.40	----
Vanadium	5.70	6.10	6.8
Zinc	44.50	61.30	31.8
Cyanide	U 10.0	U 10.0	----

Sample ID	HPGW-4 Sample Conc.	GWDUP5 Dup. Conc.	RPD
Analyte	UG/L	UG/L	%
Aluminum	97000.00	96800.00	0.2
Antimony	21.90	34.60	45.0
Arsenic	15.50	19.40	22.3
Barium	268.00	273.00	1.8
Beryllium	6.70	6.40	4.6
Cadmium	U 4.30	U 4.30	----
Calcium	296000.0	310000.0	4.6
Chromium	187.00	195.00	4.2
Cobalt	14.40	18.20	23.3
Copper	35.40	39.20	10.2
Iron	100000.0	106000.0	5.8
Lead	66.60	45.60	37.4
Magnesium	12100.00	12500.00	3.3
Manganese	425.00	436.00	2.6
Mercury	U 0.10	U 0.10	----
Nickel	57.00	64.30	12.0
Potassium	9710.00	9520.00	2.0
Selenium	U 3.40	U 3.40	----
Silver	U 1.60	2.40	----
Sodium	11400.00	11100.00	2.7
Thallium	U 4.40	U 4.40	----
Vanadium	213.00	222.00	4.1
Zinc	228.00	272.00	17.6
Cyanide	U 10.0	U 10.0	----

Sample ID	69GW-8	GWDUP6	
	Sample	Dup.	
	Conc.	Conc.	RPD
Analyte	UG/L	UG/L	%
Aluminum	24100.00	U 20.7	----
Antimony	U 13.3	U 13.3	----
Arsenic	U 1.50	1.80	----
Barium	188.00	2.80	194.1
Beryllium	1.30	0.97	29.1
Cadmium	U 4.30	U 4.30	----
Calcium	7460.00	15.60	199.2
Chromium	22.10	U 1.50	----
Cobalt	U 6.00	U 6.00	----
Copper	7.40	U 3.20	----
Iron	10700.00	63.10	197.7
Lead	20.40	16.40	21.7
Magnesium	3100.00	U 0.00	----
Manganese	168.00	2.00	195.3
Mercury	U 0.10	U 0.10	----
Nickel	5.70	U 5.20	----
Potassium	2510.00	U 343	----
Selenium	U 3.40	U 3.40	----
Silver	2.40	235.00	196.0
Sodium	4880.00	U 6.80	----
Thallium	U 4.40	U 4.40	----
Vanadium	25.60	U 2.40	77.5
Zinc	53.20	11.30	----
Cyanide	U 10.0	U 10.0	----

Sample ID	6-GW-8	GWDUP7	
	Sample	Dup.	
	Conc.	Conc.	RPD
Analyte	UG/L	UG/L	%
Aluminum	332000.0	281000.0	16.6
Antimony	U 13.30	U 13.3	----
Arsenic	6.00	2.90	69.7
Barium	792.00	716.00	10.1
Beryllium	2.90	3.20	9.8
Cadmium	U 4.30	U 4.30	----
Calcium	38200.00	35800.00	6.5
Chromium	342.00	283.00	18.9
Cobalt	15.40	13.70	11.7
Copper	75.80	65.50	14.6
Iron	50400.00	40300.00	22.3
Lead	70.40	63.00	11.1
Magnesium	12300.00	9900.00	21.6
Manganese	157.00	102.00	42.5
Mercury	0.32	0.27	16.9
Nickel	81.60	58.30	33.3
Potassium	14300.00	11700.00	20.0
Selenium	U 3.40	U 3.40	----
Silver	1.80	6.90	117.2
Sodium	2530.00	2410.00	4.9
Thallium	U 0.10	U 4.40	----
Vanadium	274.00	216.00	23.7
Zinc	151.00	120.00	22.9
Cyanide	U 10.0	U 10.0	----

Sample ID	HPGW26	GWDUP8	
	Sample	Dup.	
	Conc.	Conc.	RPD
Analyte	UG/L	UG/L	%
Aluminum	10400.00	7830.00	28.2
Antimony	U 13.3	U 13.3	----
Arsenic	U 1.50	U 1.50	----
Barium	72.00	67.70	6.2
Beryllium	U 0.50	U 0.50	----
Cadmium	U 4.30	U 4.30	----
Calcium	2830.00	2770.00	2.1
Chromium	13.00	10.30	23.2
Cobalt	U 6.00	U 6.00	----
Copper	9.10	7.20	23.3
Iron	19000.00	10900.00	54.2
Lead	9.00	5.20	53.5
Magnesium	1830.00	1710.00	6.8
Manganese	10.60	8.80	18.6
Mercury	U 0.10	U 0.10	----
Nickel	U 5.20	U 5.20	----
Potassium	2230.00	1580.00	34.1
Selenium	U 3.40	U 3.40	----
Silver	U 1.60	U 1.60	----
Sodium	5910.00	5690.00	3.8
Thallium	U 4.40	U 4.40	----
Vanadium	149.00	83.60	56.2
Zinc	68.10	43.10	45.0
Cyanide	U 10.0	U 10.0	----

Sample ID	WS-634	GWDUP9	
	Sample	Dup.	
	Conc.	Conc.	RPD
Analyte	UG/L	UG/L	%
Aluminum	U 20.7	U 20.7	----
Antimony	U 13.3	U 13.3	----
Arsenic	U 1.50	U 1.50	----
Barium	10.20	10.40	1.9
Beryllium	U 0.50	0.86	----
Cadmium	U 4.30	U 4.30	----
Calcium	58900.00	61200.00	3.8
Chromium	U 1.50	U 1.50	----
Cobalt	U 6.00	U 6.00	----
Copper	4.90	4.00	20.2
Iron	1420.00	1550.00	8.8
Lead	U 1.70	U 1.70	----
Magnesium	1190.00	1240.00	4.1
Manganese	12.50	12.50	0.0
Mercury	U 0.10	U 0.10	----
Nickel	U 5.20	U 5.20	----
Potassium	890.00	1090.00	20.2
Selenium	U 3.40	U 3.40	----
Silver	U 1.60	U 1.60	----
Sodium	5410.00	5900.00	8.7
Thallium	U 4.40	U 4.40	----
Vanadium	U 2.40	2.50	----
Zinc	23.40	14.30	48.3
Cyanide	U 10.0	U 10.0	----

Sample ID	49SW-1 Sample Conc.	SWDUP1 Dup. Conc.	RPD
Analyte	UG/L	UG/L	%
Aluminum	1180.00	1390.00	16.3
Antimony	U 13.3	U 13.3	----
Arsenic	U 1.50	U 1.50	----
Barium	U 1.70	U 1.70	----
Beryllium	U 0.50	U 0.50	----
Cadmium	U 4.30	U 4.30	----
Calcium	123000.0	140000.0	12.9
Chromium	U 1.50	U 1.50	----
Cobalt	U 6.00	U 6.00	----
Copper	U 3.20	U 3.20	----
Iron	1560.00	1550.00	0.6
Lead	U 1.70	U 1.70	----
Magnesium	343000.0	404000.0	16.3
Manganese	2.60	1.20	73.7
Mercury	U 0.10	U 0.10	----
Nickel	U 5.20	U 5.20	----
Potassium	122000.0	150000.0	20.6
Selenium	U 3.40	U 3.40	----
Silver	3.80	3.30	14.1
Sodium	986000.0	968000.0	1.8
Thallium	U 4.40	U 4.40	----
Vanadium	4.40	4.80	8.7
Zinc	U 2.70	13.00	----
Cyanide	NR	NR	----

Sample ID	6-SW-1 Sample Conc.	SWDUP2 Dup. Conc.	RPD
Analyte	UG/L	UG/L	%
Aluminum	650.00	639.00	1.7
Antimony	U 13.3	13.50	----
Arsenic	U 1.50	U 1.50	----
Barium	13.70	15.00	9.1
Beryllium	U 0.50	U 0.50	----
Cadmium	U 4.30	U 4.30	----
Calcium	6770.00	6850.00	1.2
Chromium	2.60	U 1.50	----
Cobalt	U 6.00	U 6.00	----
Copper	6.40	9.70	41.0
Iron	365.00	365.00	0.0
Lead	U 1.70	U 1.70	----
Magnesium	1160.00	1190.00	2.6
Manganese	8.10	7.50	7.7
Mercury	U 0.10	U 0.10	----
Nickel	U 5.20	U 5.20	----
Potassium	631.00	763.00	18.9
Selenium	U 3.40	U 3.40	----
Silver	18.10	U 1.60	----
Sodium	7210.00	7490.00	3.8
Thallium	U 4.40	U 4.40	----
Vanadium	2.70	2.70	0.0
Zinc	20.80	45.80	75.1
Cyanide	U 10.0	U 10.0	----

1. The "U" qualifier indicates the analyte value was below the instrument detection limit, which is the value listed to the right of the qualifier.

2. Blank RPD values indicate that either the sample or the duplicate or both contained analyte values below the instrument detection limit. Percent values for the RPD cannot be calculated under these circumstances.

SAMPLE DUPLICATE
CEIMIC

Sample ID	HPSO2-2 Sample Conc.	HPSOD-2 Dup. Conc.	RPD
Analyte	UG/L[3]	UG/L	%[4]
Arsenic	75.00	112.00	39.6
Barium	255.00	584.00	78.4
Cadmium	4.00	3.00	28.6
Chromium	3.00	6.00	66.7
Lead	69.00	54.00	24.4
Mercury	U 0.20	U 0.20	----
Selenium	110.00	U 63.00	----
Silver	U 4.00	U 4.00	----

Sample ID	HPSO3-1 Sample Conc.	HPSOD-3 Dup. Conc.	RPD
Analyte	UG/L	UG/L	%
Arsenic	75.00	92.00	20.4
Barium	382.00	244.00	44.1
Cadmium	27.00	15.00	57.1
Chromium	5.00	4.00	22.2
Lead	79.00	47.00	50.8
Mercury	U 0.20	U 0.20	----
Selenium	76.00	100.00	27.3
Silver	U 4.00	U 4.00	----

Sample ID	HPSO4-2 Sample Conc.	HPSOD-4 Dup. Conc.	RPD
Analyte	UG/L	UG/L	%
Arsenic	111.00	101.00	9.4
Barium	188.00	166.00	12.4
Cadmium	3.00	3.00	0.0
Chromium	5.00	4.00	22.2
Lead	53.00	50.00	5.8
Mercury	U 0.20	U 0.20	----
Selenium	89.00	168.00	61.5
Silver	U 4.00	U 4.00	----

Sample ID	HPSO11-3 Sample Conc.	HPSOD-5 Dup. Conc.	RPD
Analyte	UG/L	UG/L	%
Arsenic	81.00	63.00	25.0
Barium	199.00	299.00	40.2
Cadmium	4.00	U 3.00	----
Chromium	7.00	6.00	15.4
Lead	45.00	30.00	40.0
Mercury	U 0.20	1.00	----
Selenium	U 63.00	U 63.00	----
Silver	U 4.00	U 4.00	----

Sample ID	HPSO17-1 Sample Conc. UG/L	HPSOD-6 Dup. Conc. UG/L	RPD %
Analyte			
Arsenic	117.00	102.00	13.7
Barium	331.00	363.00	9.2
Cadmium	4.00	6.00	40.0
Chromium	7.00	6.00	15.4
Lead	59.00	80.00	30.2
Mercury	U 0.20	U 0.20	----
Selenium	U 63.00	84.00	----
Silver	U 4.00	4.00	----

Sample ID	HPSO22-1 Sample Conc. UG/L	HPSOD-7 Dup. Conc. UG/L	RPD %
Analyte			
Arsenic	58.00	111.00	62.7
Barium	320.00	247.00	25.7
Cadmium	U 3.00	U 3.00	----
Chromium	4.00	U 3.00	----
Lead	45.00	46.00	2.2
Mercury	U 0.20	U 0.20	----
Selenium	U 63.00	U 63.00	----
Silver	U 4.00	U 4.00	----

Sample ID	HPSO26-1 Sample Conc. UG/L	HPSOD-8 Dup. Conc. UG/L	RPD %
Analyte			
Arsenic	U 40.00	56.00	----
Barium	596.00	609.00	2.2
Cadmium	U 3.00	U 3.00	----
Chromium	5.00	U 3.00	----
Lead	38.00	47.00	21.2
Mercury	U 0.20	U 0.20	----
Selenium	U 63.00	U 63.00	----
Silver	U 4.00	U 4.00	----

Sample ID	HPSO24-1 Sample Conc. UG/L	HPSOD-9 Dup. Conc. UG/L	RPD %
Analyte			
Arsenic	92.00	554.00	143.0
Barium	137.00	136.00	0.7
Cadmium	3.00	3.00	0.0
Chromium	10.00	7.00	35.3
Lead	U 27.00	37.00	----
Mercury	U 0.20	U 0.20	----
Selenium	100.00	96.00	4.1
Silver	U 4.00	U 4.00	----

Sample ID	HPSO1-1 Sample Conc.	HPSOD-1 Dup. Conc.	RPD
Analyte	MG/KG	MG/KG	%
Aluminum	3590.00	4140.00	14.2
Antimony	U 5.40	5.90	----
Arsenic	0.55	0.50	9.5
Barium	6.00	6.10	1.7
Beryllium	U 0.20	U 0.16	----
Cadmium	0.80	U 0.47	----
Calcium	1450.00	1660.00	13.5
Chromium	5.00	5.00	0.0
Cobalt	1.40	0.93	40.3
Copper	1.40	1.10	24.0
Iron	1790.00	2030.00	12.6
Lead	2.40	3.70	42.6
Magnesium	128.00	116.00	9.8
Manganese	3.80	2.50	41.3
Mercury	U 0.11	U 0.09	----
Nickel	2.60	1.70	41.9
Potassiu,	124.00	127.00	2.4
Selenium	U 0.16	0.21	----
Silver	U 0.80	U 0.62	----
Sodium	120.00	297.00	84.9
Thallium	U 0.16	U 0.17	----
Vanadium	5.20	6.10	15.9
Zinc	0.80	1.40	54.5
Cyanide	U 0.69	U 0.69	----

Sample ID	48SE1 Sample Conc.	SEDUP1 Dup. Conc.	RPD
Analyte	MG/KG	MG/KG	%
Aluminum	6130.00	9650.00	44.6
Antimony	U 8.20	U 9.40	----
Arsenic	5.50	5.70	3.6
Barium	5.20	5.20	0.0
Beryllium	1.20	1.40	15.4
Cadmium	3.00	2.80	6.9
Calcium	1250.00	1280.00	2.4
Chromium	14.00	18.80	29.3
Cobalt	U 1.80	U 2.10	----
Copper	5.80	5.20	10.9
Iron	16700.00	17900.00	6.9
Lead	13.40	11.50	15.3
Magnesium	1670.00	1840.00	9.7
Manganese	11.90	12.90	8.1
Mercury	U 0.18	U 0.18	----
Nickel	U 2.70	U 3.10	----
Potassiu,	1030.00	1200.00	15.2
Selenium	U 0.35	0.42	----
Silver	U 1.20	U 1.40	----
Sodium	5850.00	6080.00	3.9
Thallium	U 0.35	U 0.28	----
Vanadium	29.30	34.40	16.0
Zinc	18.90	22.60	17.8
Cyanide	U 1.10	U 1.10	----

Sample ID	6SE2	SEDUP2	
	Sample	Dup.	
	Conc.	Conc.	RPD
Analyte	MG/KG	MG/KG	%
Aluminum	567.00	557.00	1.8
Antimony	U 6.50	U 4.90	----
Arsenic	U 0.35	U 0.36	----
Barium	U 0.48	U 0.36	----
Beryllium	0.97	0.73	28.2
Cadmium	U 0.73	U 0.55	----
Calcium	169.00	165.00	2.4
Chromium	2.70	1.50	57.1
Cobalt	U 1.50	U 1.10	----
Copper	0.73	0.55	28.1
Iron	606.00	644.00	6.1
Lead	1.30	1.10	16.7
Magnesium	72.10	83.50	14.7
Manganese	0.97	0.91	6.4
Mercury	U 0.12	U 0.13	----
Nickel	U 2.20	U 1.6	----
Potassiu,	115.00	86.30	28.5
Selenium	U 0.18	U 0.91	----
Silver	U 0.97	U 0.73	----
Sodium	125.00	159.00	23.9
Thallium	U 0.18	U 0.18	----
Vanadium	0.97	0.55	55.3
Zinc	10.20	0.91	167.2
Cyanide	U 0.75	U 0.83	----

3. The "U" qualifier indicates the analyte value was below the instrument detection limit, which is the value listed to the right of the qualifier.

4. Blank RPD values indicate that either the sample or the duplicate or both contained analyte values below the instrument detection limit. Percent values for the RPD cannot be calculated under these circumstances.

APPENDIX H

ANALYTICAL RESULTS
SOIL SAMPLES

CAMP LEJEUNE - HPIA

VOLATILE ORGANIC COMPOUNDS IN SOIL SAMPLES

Concentration in ug/kg

CHART = SOIL-V1

	SB-1				SB-2		
	HPSO1-1	HPSO1-1D (HPSOD1)	HPSO1-2	HPSO1-3	HPSO2-1	HPSO2-2	HPSO2-2D (HPSOD2)
COMPOUND depth:	0-2'	0-2'	2-4'	4-6'	0-2'	2-4'	2-4'
Chloromethane	11U	11U	11U	11U	12U	11U	11U
Bromomethane	11U	11U	11U	11U	12U	11U	11U
Vinyl Chloride	11U	11U	11U	11U	12U	11U	11U
Chloroethane	11U	11U	11U	11U	12U	11U	11U
Methylene Chloride	1BJ	2BJ	1BJ	2BJ	2BJ	2BJ	2BJ
Acetone	8BJ	11U	9BJ	11U	18B	11U	11U
Carbon Disulfide	5U	6U	6U	5U	6U	6U	6U
1,1-Dichloroethene	5U	6U	6U	5U	6U	6U	6U
1,1-Dichloroethane	5U	6U	6U	5U	6U	6U	6U
1,2-Dichloroethene (total)	5U	6U	6U	5U	6U	6U	6U
Chloroform	5U	6U	6U	5U	6U	6U	6U
1,2-Dichloroethane	5U	6U	6U	5U	6U	6U	6U
2-Butanone	11U	11U	11U	11U	12U	11U	11U
1,1,1-Trichloroethane	5U	6U	6U	5U	6U	6U	6U
Carbon Tetrachloride	5U	6U	6U	5U	6U	6U	6U
Vinyl Acetate	11U	11U	11U	11U	12U	11U	11U
Bromodichloromethane	5U	6U	6U	5U	6U	6U	6U
1,2-Dichloropropane	5U	6U	6U	5U	6U	6U	6U
cis-1,3-Dichloropropene	5U	6U	6U	5U	6U	6U	6U
Trichloroethene	5U	6U	6U	5U	6U	6U	6U
Dibromochloromethane	5U	6U	6U	5U	6U	6U	6U
1,1,2-Trichloroethane	5U	6U	6U	5U	6U	6U	6U
Benzene	5U	6U	6U	5U	6U	6U	6U
trans-1,3-Dichloropropene	5U	6U	6U	5U	6U	6U	6U
Bromoform	5U	6U	6U	5U	6U	6U	6U
4-Methyl-2-Pentanone	11U	11U	11U	11U	12U	11U	11U
2-Hexanone	11U	11U	11U	11U	12U	11U	11U
Tetrachloroethene	5U	6U	6U	5U	6U	6U	6U
1,1,2,2-Tetrachloroethane	5U	6U	6U	5U	6U	6U	6U
Toluene	5U	6U	6U	5U	6U	6U	6U
Chlorobenzene	5U	6U	6U	5U	6U	6U	6U
Ethylbenzene	5U	6U	6U	5U	6U	6U	6U
Styrene	5U	6U	6U	5U	6U	6U	6U
Total Xylenes	5U	6U	6U	5U	6U	6U	6U

CAMP LEJEUNE - HPIA

VOLATILE ORGANIC COMPOUNDS IN SOIL SAMPLES

Concentration in ug/kg

CHART = SOIL-V2

	SB-3		SB-4			
	HPSO3-1	HPSO3-1D (HPSOD-3)	HPSO4-1	HPSO4-2	HPSO4-2D (HPSOD-4)	HPSO4-3
COMPOUND depth:	0-2'	0-2'	0-2'	2-4'	2-4'	4-6'
Chloromethane	11U	11U	7BJ	9BJ	12U	11U
Bromomethane	11U	11U	11U	12U	12U	11U
Vinyl Chloride	11U	11U	11U	12U	12U	11U
Chloroethane	11U	11U	11U	12U	12U	11U
Methylene Chloride	2BJ	2BJ	6U	6U	6U	6U
Acetone	11U	11U	5BJ	12U	77B	54B
Carbon Disulfide	5U	5U	6U	6U	6U	6U
1,1-Dichloroethene	5U	5U	6U	6U	6U	6U
1,1-Dichloroethane	5U	5U	6U	6U	6U	6U
1,2-Dichloroethene (total)	5U	5U	6U	6U	6U	6U
Chloroform	5U	5U	6U	6U	6U	6U
1,2-Dichloroethane	5U	5U	6U	6U	6U	6U
2-Butanone	11U	11U	11U	12U	12U	11U
1,1,1-Trichloroethane	5U	5U	6U	6U	6U	6U
Carbon Tetrachloride	5U	5U	6U	6U	6U	6U
Vinyl Acetate	11U	11U	11U	12U	12U	11U
Bromodichloromethane	5U	5U	6U	6U	6U	6U
1,2-Dichloropropane	5U	5U	6U	6U	6U	6U
cis-1,3-Dichloropropene	5U	5U	6U	6U	6U	6U
Trichloroethene	5U	5U	6U	4J	6U	6U
Dibromochloromethane	5U	5U	6U	6U	6U	6U
1,1,2-Trichloroethane	5U	5U	6U	6U	6U	6U
Benzene	5U	5U	6U	6U	6U	6U
trans-1,3-Dichloropropene	5U	5U	6U	6U	6U	6U
Bromoform	5U	5U	6U	6U	6U	6U
4-Methyl-2-Pentanone	11U	11U	11U	12U	12U	11U
2-Hexanone	11U	11U	11U	12U	12U	11U
Tetrachloroethene	5U	5U	6U	6U	6U	6U
1,1,2,2-Tetrachloroethane	5U	5U	6U	6U	6U	6U
Toluene	5U	5U	6U	6U	6U	6U
Chlorobenzene	5U	5U	6U	6U	6U	6U
Ethylbenzene	5U	5U	6U	6U	6U	6U
Styrene	5U	5U	6U	6U	6U	6U
Total Xylenes	5U	5U	6U	6U	6U	6U

CAMP LEJEUNE - HPIA

VOLATILE ORGANIC COMPOUNDS IN SOIL SAMPLES

Concentration in ug/kg

CHART = SOIL-V3

	SB-5			SB-6		
	HPS05-1	HPS05-2	HPS05-3	HPS06-1	HPS06-2	HPS06-3
COMPOUND depth:	0-2'	2-4'	4-6'	0-2'	2-4'	4-6'
Chloromethane	11U	12U	12U	11U	12U	12U
Bromomethane	11U	12U	12U	11U	12U	12U
Vinyl Chloride	11U	12U	12U	11U	12U	12U
Chloroethane	11U	12U	12U	11U	12U	12U
Methylene Chloride	6U	6U	6U	6U	6U	6U
Acetone	11U	12U	4BJ	21B	35	13B
Carbon Disulfide	6U	6U	6U	6U	6U	6U
1,1-Dichloroethene	6U	6U	6U	6U	6U	6U
1,1-Dichloroethane	6U	6U	6U	6U	6U	6U
1,2-Dichloroethene (total)	6U	55	120	6U	6U	6U
Chloroform	6U	6U	6U	6U	6U	6U
1,2-Dichloroethane	6U	6U	6U	6U	6U	6U
2-Butanone	11U	12U	12U	11U	12U	12U
1,1,1-Trichloroethane	6U	6U	6U	6U	6U	6U
Carbon Tetrachloride	6U	6U	6U	6U	6U	6U
Vinyl Acetate	11U	12U	12U	11U	12U	12U
Bromodichloromethane	6U	6U	6U	6U	6U	6U
1,2-Dichloropropane	6U	6U	6U	6U	6U	6U
cis-1,3-Dichloropropene	6U	6U	6U	6U	6U	6U
Trichloroethene	6U	6U	120	6U	6U	6U
Dibromochloromethane	6U	6U	6U	6U	6U	6U
1,1,2-Trichloroethane	6U	6U	6U	6U	6U	6U
Benzene	6U	6U	6U	6U	6U	6U
trans-1,3-Dichloropropene	6U	6U	6U	6U	6U	6U
Bromoform	6U	6U	6U	6U	6U	6U
4-Methyl-2-Pentanone	11U	12U	12U	11U	12U	12U
2-Hexanone	11U	12U	12U	11U	12U	12U
Tetrachloroethene	6U	6U	6U	6U	6U	6U
1,1,2,2-Tetrachloroethane	6U	6U	6U	6U	6U	6U
Toluene	6U	10	4J	6U	6U	6U
Chlorobenzene	6U	6U	6U	6U	6U	6U
Ethylbenzene	6U	6U	6U	6U	6U	6U
Styrene	6U	6U	6U	6U	6U	6U
Total Xylenes	6U	6U	6U	6U	6U	6U

PROJECT Camp Lejeune

PREPARED BY [illegible]

DATE 5/4/91

CHECKED BY [illegible]

DATE 5-15-91

CAMP LEJEUNE - HPIA

VOLATILE ORGANIC COMPOUNDS IN SOIL SAMPLES

Concentration in ug/kg

CHART = SOIL-V4

		SB-7			SB-8		
		HPS07-1	HPS07-2	HPS07-3	HPS08-1	HPS08-2	HPS08-3
COMPOUND	depth:	0-2'	2-4'	4-6'	0-2'	2-4'	4-6'
Chloromethane		11U	11U	12U	12U	11U	11U
Bromomethane		11U	11U	12U	12U	11U	11U
Vinyl Chloride		11U	11U	12U	12U	11U	11U
Chloroethane		11U	11U	12U	12U	11U	11U
Methylene Chloride		2BJ	4BJ	2BJ	2BJ	6U	2BJ
Acetone		27B	23B	15B	12U	11U	6J
Carbon Disulfide		6U	6U	6U	6U	6U	6U
1,1-Dichloroethene		6U	6U	6U	6U	6U	6U
1,1-Dichloroethane		6U	6U	6U	6U	6U	6U
1,2-Dichloroethene (total)		6U	6U	6U	6U	6U	6U
Chloroform		6U	6U	6U	6U	6U	6U
1,2-Dichloroethane		6U	6U	6U	6U	6U	6U
2-Butanone		11U	11U	12U	12U	11U	11U
1,1,1-Trichloroethane		6U	6U	6U	6U	6U	6U
Carbon Tetrachloride		6U	6U	6U	6U	6U	6U
Vinyl Acetate		11U	11U	12U	12U	11U	11U
Bromodichloromethane		6U	6U	6U	6U	6U	6U
1,2-Dichloropropane		6U	6U	6U	6U	6U	6U
cis-1,3-Dichloropropene		6U	6U	6U	6U	6U	6U
Trichloroethene		6U	6U	6U	6U	6U	6U
Dibromochloromethane		6U	6U	6U	6U	6U	6U
1,1,2-Trichloroethane		6U	6U	6U	6U	6U	6U
Benzene		6U	6U	6U	6U	6U	6U
trans-1,3-Dichloropropene		6U	6U	6U	6U	6U	6U
Bromoform		6U	6U	6U	6U	6U	6U
4-Methyl-2-Pentanone		11U	11U	12U	12U	11U	11U
2-Hexanone		11U	11U	12U	12U	11U	11U
Tetrachloroethene		6U	6U	6U	6U	6U	6U
1,1,2,2-Tetrachloroethane		6U	6U	6U	6U	6U	6U
Toluene		6U	6U	6U	6U	6U	6U
Chlorobenzene		6U	6U	6U	6U	6U	6U
Ethylbenzene		6U	6U	6U	6U	6U	6U
Styrene		6U	6U	6U	6U	6U	6U
Total Xylenes		6U	6U	6U	6U	6U	6U

CAMP LEJEUNE - HPIA

VOLATILE ORGANIC COMPOUNDS IN SOIL SAMPLES

Concentration in ug/kg

CHART = SOIL-V5

		SB-9			SB-10		
		HPS09-1	HPS09-2	HPS09-3	HPS010-1	HPS010-2	HPS010-3
COMPOUND	depth:	0-2'	2-4'	4-6'	0-2'	2-4'	4-6'
Chloromethane		11U	11U	12U	12U	12U	12U
Bromomethane		11U	11U	12U	12U	12U	12U
Vinyl Chloride		11U	11U	12U	12U	12U	12U
Chloroethane		11U	11U	12U	12U	12U	12U
Methylene Chloride		6U	2BJ	2BJ	2BJ	2BJ	3BJ
Acetone		6J	20	13	5J	9J	12U
Carbon Disulfide		6U	6U	6U	6U	6U	6U
1,1-Dichloroethene		6U	6U	6U	6U	6U	6U
1,1-Dichloroethane		6U	6U	6U	6U	6U	6U
1,2-Dichloroethene (total)		6U	6U	6U	6U	6U	6U
Chloroform		6U	6U	6U	6U	6U	6U
1,2-Dichloroethane		6U	6U	6U	6U	6U	6U
2-Butanone		11U	11U	12U	12U	12U	12U
1,1,1-Trichloroethane		6U	6U	6U	6U	6U	6U
Carbon Tetrachloride		6U	6U	6U	6U	6U	6U
Vinyl Acetate		11U	11U	12U	12U	12U	12U
Bromodichloromethane		6U	6U	6U	6U	6U	6U
1,2-Dichloropropane		6U	6U	6U	6U	6U	6U
cis-1,3-Dichloropropene		6U	6U	6U	6U	6U	6U
Trichloroethene		6U	6U	6U	6U	6U	6U
Dibromochloromethane		6U	6U	6U	6U	6U	6U
1,1,2-Trichloroethane		6U	6U	6U	6U	6U	6U
Benzene		6U	6U	6U	6U	6U	6U
trans-1,3-Dichloropropene		6U	6U	6U	6U	6U	6U
Bromoform		6U	6U	6U	6U	6U	6U
4-Methyl-2-Pentanone		11U	11U	12U	12U	12U	12U
2-Hexanone		11U	11U	12U	12U	12U	1J
Tetrachloroethene		6U	6U	6U	6U	6U	6U
1,1,2,2-Tetrachloroethane		6U	6U	6U	6U	6U	6U
Toluene		6U	6U	6U	6U	6U	6U
Chlorobenzene		6U	6U	6U	6U	6U	6U
Ethylbenzene		6U	6U	6U	6U	6U	6U
Styrene		6U	6U	6U	6U	6U	6U
Total Xylenes		6U	6U	6U	6U	6U	6U

PROJECT Camp Lejeune

PREPARED BY [illegible] 5/4/91

DATE

CHECKED BY [illegible]

DATE 5-15-91

CAMP LEJEUNE - HPIA

VOLATILE ORGANIC COMPOUNDS IN SOIL SAMPLES

Concentration in ug/kg

CHART = SOIL-V6

		SB-11				SB-12		
		HPSO11-1	HPSO11-2	HPSO11-3	HPSO11-3D (HPSOD-5)	HPSO12-1	HPSO12-2	HPSO12-3
COMPOUND	depth:	0-2'	2-4'	4-6'	4-6'	0-2'	2-4'	8-10'
Chloromethane		11U	11U	12U	12U	11U	11U	11U
Bromomethane		11U	11U	12U	12U	11U	11U	11U
Vinyl Chloride		11U	11U	12U	12U	11U	11U	11U
Chloroethane		11U	11U	12U	12U	11U	11U	11U
Methylene Chloride		5U	6U	2BJ	2BJ	1BJ	3BJ	4BJ
Acetone		360BE	72B	19B	22B	20B	9J	13
Carbon Disulfide		5U	6U	6U	6U	6U	6U	6U
1,1-Dichloroethene		5U	6U	6U	6U	6U	6U	6U
1,1-Dichloroethane		5U	6U	6U	6U	6U	6U	6U
1,2-Dichloroethene (total)		5U	6U	6U	6U	6U	6U	6U
Chloroform		5U	6U	6U	6U	6U	6U	6U
1,2-Dichloroethane		5U	6U	6U	6U	6U	6U	6U
2-Butanone		11U	11U	12U	12U	11U	11U	11U
1,1,1-Trichloroethane		5U	6U	6U	6U	6U	6U	6U
Carbon Tetrachloride		5U	6U	6U	6U	6U	6U	6U
Vinyl Acetate		11U	11U	12U	12U	11U	11U	11U
Bromodichloromethane		5U	6U	6U	6U	6U	6U	6U
1,2-Dichloropropane		5U	6U	6U	6U	6U	6U	6U
cis-1,3-Dichloropropene		5U	6U	6U	6U	6U	6U	6U
Trichloroethene		5U	6U	6U	6U	6U	6U	6U
Dibromochloromethane		5U	6U	6U	6U	6U	6U	6U
1,1,2-Trichloroethane		5U	6U	6U	6U	6U	6U	6U
Benzene		5U	6U	6U	6U	6U	6U	6U
trans-1,3-Dichloropropene		5U	6U	6U	6U	6U	6U	6U
Bromoform		5U	6U	6U	6U	6U	6U	6U
4-Methyl-2-Pentanone		11U	11U	12U	12U	11U	11U	11U
2-Hexanone		11U	11U	12U	12U	11U	11U	11U
Tetrachloroethene		5U	6U	6U	6U	6U	6U	6U
1,1,2,2-Tetrachloroethane		5U	6U	6U	6U	6U	6U	6U
Toluene		5U	6U	6U	6U	6U	6U	6U
Chlorobenzene		5U	6U	3J	1J	6U	6U	6U
Ethylbenzene		5U	6U	6U	6U	6U	6U	6U
Styrene		5U	6U	6U	6U	6U	6U	6U
Total Xylenes		5U	6U	6U	6U	6U	6U	6U

CAMP LEJEUNE - HPIA

VOLATILE ORGANIC COMPOUNDS IN SOIL SAMPLES

Concentration in ug/kg

CHART = SOIL-V7

		SB-13			SB-14		
		HPSO13-1	HPSO13-2	HPSO13-3	HPSO14-1	HPSO14-2	HPSO14-3
COMPOUND	depth:	0-2'	6-8'	8-10'	2-4'	4-6'	8-10'
Chloromethane		11U	11U	12U	11U	11U	60U
Bromomethane		11U	11U	12U	11U	11U	60U
Vinyl Chloride		11U	11U	12U	11U	11U	60U
Chloroethane		11U	11U	12U	11U	11U	60U
Methylene Chloride		4BJ	2BJ	3BJ	3BJ	2BJ	10BJ
Acetone		8BJ	47B	16B	20B	21B	100B
Carbon Disulfide		6U	5U	6U	6U	6U	30U
1,1-Dichloroethene		6U	5U	6U	6U	6U	30U
1,1-Dichloroethane		6U	5U	6U	6U	6U	30U
1,2-Dichloroethene (total)		6U	5U	6U	6U	6U	30U
Chloroform		6U	5U	6U	6U	6U	30U
1,2-Dichloroethane		6U	5U	6U	6U	6U	30U
2-Butanone		11U	11U	12U	11U	11U	60U
1,1,1-Trichloroethane		6U	5U	6U	6U	6U	30U
Carbon Tetrachloride		6U	5U	6U	6U	6U	30U
Vinyl Acetate		11U	11U	12U	11U	11U	60U
Bromodichloromethane		6U	5U	6U	6U	6U	30U
1,2-Dichloropropane		6U	5U	6U	6U	6U	30U
cis-1,3-Dichloropropene		6U	5U	6U	6U	6U	30U
Trichloroethene		6U	5U	6U	6U	6U	30U
Dibromochloromethane		6U	5U	6U	6U	6U	30U
1,1,2-Trichloroethane		6U	5U	6U	6U	6U	30U
Benzene		6U	5U	6U	6U	6U	30U
trans-1,3-Dichloropropene		6U	5U	6U	6U	6U	30U
Bromoform		6U	5U	6U	6U	6U	30U
4-Methyl-2-Pentanone		11U	11U	12U	11U	11U	60U
2-Hexanone		11U	11U	12U	11U	11U	60U
Tetrachloroethene		6U	5U	6U	6U	6U	30U
1,1,2,2-Tetrachloroethane		6U	5U	6U	6U	6U	30U
Toluene		6U	5U	6U	6U	6U	30U
Chlorobenzene		1J	5U	6U	6U	6U	30U
Ethylbenzene		6U	5U	6U	6U	6U	62
Styrene		6U	5U	6U	6U	6U	30U
Total Xylenes		6U	5U	6U	1J	6U	580

PROJECT Camp Lejeune

DATE 5/9/91

5-15-91

CAMP LEJEUNE - HPIA

VOLATILE ORGANIC COMPOUNDS IN SOIL SAMPLES

Concentration in ug/kg

CHART = SOIL-V8

	SB-15			SB-16		
	HPS015-1	HPS015-2	HPS015-3	HPS016-1	HPS016-2	HPS016-3
COMPOUND depth:	0-2'	6-8'	8-10'	0-2'	6-8'	8-10'
Chloromethane	11U	11U	11U	11U	11U	12U
Bromomethane	11U	11U	11U	11U	11U	12U
Vinyl Chloride	11U	11U	11U	11U	11U	12U
Chloroethane	11U	11U	11U	11U	11U	12U
Methylene Chloride	3BJ	6U	6U	6U	6U	6U
Acetone	11U	11U	25B	23	15	43
Carbon Disulfide	6U	6U	6U	6U	6U	6U
1,1-Dichloroethene	6U	6U	6U	6U	6U	6U
1,1-Dichloroethane	6U	6U	6U	6U	6U	6U
1,2-Dichloroethene (total)	6U	6U	6U	6U	6U	6U
Chloroform	6U	6U	6U	6U	6U	6U
1,2-Dichloroethane	6U	6U	6U	6U	6U	6U
2-Butanone	11U	11U	11U	11U	11U	12U
1,1,1-Trichloroethane	6U	6U	6U	6U	6U	6U
Carbon Tetrachloride	6U	6U	6U	6U	6U	6U
Vinyl Acetate	11U	11U	11U	11U	11U	12U
Bromodichloromethane	6U	6U	6U	6U	6U	6U
1,2-Dichloropropane	6U	6U	6U	6U	6U	6U
cis-1,3-Dichloropropene	6U	6U	6U	6U	6U	6U
Trichloroethene	2J	6U	6U	2J	6U	3J
Dibromochloromethane	6U	6U	6U	6U	6U	6U
1,1,2-Trichloroethane	6U	6U	6U	6U	6U	6U
Benzene	6U	6U	6U	6U	6U	6U
trans-1,3-Dichloropropene	6U	6U	6U	6U	6U	6U
Bromoform	6U	6U	6U	6U	6U	6U
4-Methyl-2-Pentanone	11U	11U	11U	11U	11U	12U
2-Hexanone	11U	11U	11U	11U	11U	12U
Tetrachloroethene	6U	6U	6U	6U	6U	6U
1,1,2,2-Tetrachloroethane	6U	6U	6U	6U	6U	6U
Toluene	6U	6U	6U	6U	6U	6U
Chlorobenzene	6U	6U	6U	6U	6U	6U
Ethylbenzene	6U	6U	6U	6U	6U	6U
Styrene	6U	6U	6U	6U	6U	6U
Total Xylenes	6U	6U	6U	6U	6U	6U

PROJECT Camp Lejeune

PREPARED BY [illegible]

DATE 5/9/91

CHECKED BY [illegible]

DATE 5-15-91

CAMP LEJEUNE - HPIA

VOLATILE ORGANIC COMPOUNDS IN SOIL SAMPLES

Concentration in ug/kg

CHART = SOIL-V9

		SB-17				SB-18		
		HPSO17-1	HPSO17-1D (HPSOD6)	HPSO17-2	HPSO17-3	HPSO18-1	HPSO18-2	HPSO18-3
COMPOUND	depth:	0-2'	0-2'	6-8'	8-10'	4-6'	6-8'	8-10'
Chloromethane		11U	11U	11U	12U	11U	11U	11U
Bromomethane		11U	11U	11U	12U	11U	11U	11U
Vinyl Chloride		11U	11U	11U	12U	11U	11U	11U
Chloroethane		11U	11U	11U	12U	11U	11U	11U
Methylene Chloride		6U	5U	5U	3BJ	6U	4BJ	6U
Acetone		12	11U	22	20	59	39	10J
Carbon Disulfide		6U	5U	5U	6U	6U	6U	6U
1,1-Dichloroethene		6U	5U	5U	6U	6U	6U	6U
1,1-Dichloroethane		6U	5U	5U	6U	6U	6U	6U
1,2-Dichloroethene (total)		6U	5U	5U	6U	6U	6U	6U
Chloroform		6U	5U	5U	6U	6U	6U	6U
1,2-Dichloroethane		6U	5U	5U	6U	6U	6U	6U
2-Butanone		11U	11U	11U	12U	11U	11U	11U
1,1,1-Trichloroethane		6U	5U	5U	6U	6U	6U	6U
Carbon Tetrachloride		6U	5U	5U	6U	6U	6U	6U
Vinyl Acetate		11U	11U	11U	12U	11U	11U	11U
Bromodichloromethane		6U	5U	5U	6U	6U	6U	6U
1,2-Dichloropropane		6U	5U	5U	6U	6U	6U	6U
cis-1,3-Dichloropropene		6U	5U	5U	6U	6U	6U	6U
Trichloroethene		6U	5U	5U	6U	6U	6U	6U
Dibromochloromethane		6U	5U	5U	6U	6U	6U	6U
1,1,2-Trichloroethane		6U	5U	5U	6U	6U	6U	6U
Benzene		6U	5U	5U	6U	6U	6U	6U
trans-1,3-Dichloropropene		6U	5U	5U	6U	6U	6U	6U
Bromoform		6U	5U	5U	6U	6U	6U	6U
4-Methyl-2-Pentanone		11U	11U	11U	12U	11U	11U	11U
2-Hexanone		11U	11U	11U	12U	11U	11U	11U
Tetrachloroethene		6U	5U	5U	6U	6U	6U	6U
1,1,2,2-Tetrachloroethane		6U	5U	5U	6U	6U	6U	6U
Toluene		6U	5U	5U	6U	6U	6U	6U
Chlorobenzene		6U	5U	5U	6U	6U	6U	6U
Ethylbenzene		6U	5U	5U	6U	6U	6U	6U
Styrene		6U	5U	5U	6U	6U	6U	6U
Total Xylenes		6U	5U	5U	6U	6U	6U	6U

CAMP LEJEUNE - HPIA

VOLATILE ORGANIC COMPOUNDS IN SOIL SAMPLES

Concentration in ug/kg

CHART = SOIL-V10

		SB-19			SB-20		
		HPS019-1	HPS019-2	HPS019-3	HPS020-1	HPS020-2	HPS020-3
COMPOUND	depth:	0-2'	2-4'	8-10'	0-2'	6-8'	8-10'
Chloromethane		16U	11U	12U	11U	11U	11U
Bromomethane		16U	11U	12U	11U	11U	11U
Vinyl Chloride		16U	11U	12U	11U	11U	11U
Chloroethane		16U	11U	12U	11U	11U	11U
Methylene Chloride		8U	6U	6U	6U	5U	6U
Acetone		15J	15	12U	19	14	13
Carbon Disulfide		8U	6U	6U	6U	5U	6U
1,1-Dichloroethene		8U	6U	6U	6U	5U	6U
1,1-Dichloroethane		8U	6U	6U	6U	5U	6U
1,2-Dichloroethene (total)		8U	6U	6U	6U	5U	6U
Chloroform		8U	6U	6U	6U	5U	6U
1,2-Dichloroethane		8U	6U	6U	6U	5U	6U
2-Butanone		16U	11U	12U	11U	11U	11U
1,1,1-Trichloroethane		8U	6U	6U	6U	5U	6U
Carbon Tetrachloride		8U	6U	6U	6U	5U	6U
Vinyl Acetate		16U	11U	12U	11U	11U	11U
Bromodichloromethane		8U	6U	6U	6U	5U	6U
1,2-Dichloropropane		8U	6U	6U	6U	5U	6U
cis-1,3-Dichloropropene		8U	6U	6U	6U	5U	6U
Trichloroethene		8U	6U	6U	6U	5U	6U
Dibromochloromethane		8U	6U	6U	6U	5U	6U
1,1,2-Trichloroethane		8U	6U	6U	6U	5U	6U
Benzene		8U	6U	6U	6U	5U	6U
trans-1,3-Dichloropropene		8U	6U	6U	6U	5U	6U
Bromoform		8U	6U	6U	6U	5U	6U
4-Methyl-2-Pentanone		16U	11U	12U	11U	11U	11U
2-Hexanone		16U	11U	12U	11U	11U	11U
Tetrachloroethene		8U	6U	6U	6U	5U	6U
1,1,2,2-Tetrachloroethane		8U	6U	6U	6U	5U	6U
Toluene		8U	6U	6U	6U	5U	6U
Chlorobenzene		8U	6U	6U	6U	5U	6U
Ethylbenzene		8U	6U	6U	6U	5U	6U
Styrene		8U	6U	6U	6U	5U	6U
Total Xylenes		8U	6U	6U	6U	5U	6U

PROJECT Camp Lejeune

PREPARED BY Ed Kryk

DATE 5/4/91

CHECKED BY Judy Hume

DATE 5-15-91

CAMP LEJEUNE - HPIA

VOLATILE ORGANIC COMPOUNDS IN SOIL SAMPLES

Concentration in ug/kg

CHART = SOIL-V11

		SB-21			SB-22			
		HPSO21-1	HPSO21-2	HPSO21-3	HPSO22-1	HPSO22-1D (HPSOD-7)	HPSO22-2	HPSO22-3
COMPOUND	depth:	0-2'	2-4'	4-6'	0-2'	0-2'	2-4'	4-6'
Chloromethane		11U	11U	13U	11U	3J	11U	13U
Bromomethane		11U	11U	13U	11U	11U	11U	13U
Vinyl Chloride		11U	11U	13U	11U	11U	11U	13U
Chloroethane		11U	11U	13U	11U	11U	11U	13U
Methylene Chloride		2BJ	2BJ	2BJ	6U	6U	6U	6U
Acetone		5BJ	3BJ	17B	25	11J	26	31
Carbon Disulfide		6U	6U	6U	6U	6U	6U	6U
1,1-Dichloroethene		6U	6U	6U	6U	6U	6U	6U
1,1-Dichloroethane		6U	6U	6U	6U	6U	6U	6U
1,2-Dichloroethene (total)		6U	6U	6U	6U	6U	6U	6U
Chloroform		6U	6U	6U	6U	6U	6U	6U
1,2-Dichloroethane		6U	6U	6U	6U	6U	6U	6U
2-Butanone		11U	11U	13U	11U	11U	11U	13U
1,1,1-Trichloroethane		6U	6U	6U	6U	6U	6U	6U
Carbon Tetrachloride		6U	6U	6U	6U	6U	6U	6U
Vinyl Acetate		11U	11U	13U	11U	11U	11U	13U
Bromodichloromethane		6U	6U	6U	6U	6U	6U	6U
1,2-Dichloropropane		6U	6U	6U	6U	6U	6U	6U
cis-1,3-Dichloropropene		6U	6U	6U	6U	6U	6U	6U
Trichloroethene		6U	6U	6U	6U	6U	6U	6U
Dibromochloromethane		6U	6U	6U	6U	6U	6U	6U
1,1,2-Trichloroethane		6U	6U	6U	6U	6U	6U	6U
Benzene		6U	6U	6U	6U	6U	6U	6U
trans-1,3-Dichloropropene		6U	6U	6U	6U	6U	6U	6U
Bromoform		6U	6U	6U	6U	6U	6U	6U
4-Methyl-2-Pentanone		11U	11U	13U	11U	11U	11U	13U
2-Hexanone		11U	11U	13U	11U	11U	11U	13U
Tetrachloroethene		6U	6U	6U	6U	6U	6U	6U
1,1,2,2-Tetrachloroethane		6U	6U	6U	6U	6U	6U	6U
Toluene		6U	6U	6U	6U	6U	6U	6U
Chlorobenzene		6U	6U	6U	6U	6U	6U	6U
Ethylbenzene		6U	6U	6U	6U	6U	6U	6U
Styrene		6U	6U	6U	6U	6U	6U	6U
Total Xylenes		6U	6U	6U	6U	6U	6U	6U

CAMP LEJEUNE - HPIA

VOLATILE ORGANIC COMPOUNDS IN SOIL SAMPLES

Concentration in ug/kg

CHART = SOIL-V12

		SB-23			SB-24			
		HPS023-1	HPS023-2	HPS023-3	HPS024-1	HPS024-1D (HPS0D-9)	HPS024-2	HPS024-3
COMPOUND	depth:	0-2'	2-4'	4-6'	0-2'	0-2'	4-6'	6-8'
Chloromethane		11U	12U	11U	11U	11U	11U	11U
Bromomethane		11U	12U	11U	11U	11U	11U	11U
Vinyl Chloride		11U	12U	11U	11U	11U	11U	11U
Chloroethane		11U	12U	11U	11U	11U	11U	11U
Methylene Chloride		2BJ	6U	5U	4BJ	1J	6U	6U
Acetone		11U	12U	5J	20	38B	14	40
Carbon Disulfide		6U	6U	5U	5U	5U	6U	6U
1,1-Dichloroethene		6U	6U	5U	5U	5U	6U	6U
1,1-Dichloroethane		6U	6U	5U	5U	5U	6U	6U
1,2-Dichloroethene (total)		6U	6U	5U	5U	5U	6U	6U
Chloroform		6U	6U	5U	5U	5U	6U	6U
1,2-Dichloroethane		6U	6U	5U	5U	5U	6U	6U
2-Butanone		11U	12U	11U	11U	11U	11U	11U
1,1,1-Trichloroethane		6U	6U	5U	5U	5U	6U	6U
Carbon Tetrachloride		6U	6U	5U	5U	5U	6U	6U
Vinyl Acetate		11U	12U	11U	11U	11U	11U	11U
Bromodichloromethane		6U	6U	5U	5U	5U	6U	6U
1,2-Dichloropropane		6U	6U	5U	5U	5U	6U	6U
cis-1,3-Dichloropropene		6U	6U	5U	5U	5U	6U	6U
Trichloroethene		6U	6U	5U	5U	5U	6U	6U
Dibromochloromethane		6U	6U	5U	5U	5U	6U	6U
1,1,2-Trichloroethane		6U	6U	5U	5U	5U	6U	6U
Benzene		6U	6U	5U	5U	5U	6U	6U
trans-1,3-Dichloropropene		6U	6U	5U	5U	5U	6U	6U
Bromoform		6U	6U	5U	5U	5U	6U	6U
4-Methyl-2-Pentanone		11U	12U	11U	11U	11U	11U	11U
2-Hexanone		11U	12U	11U	11U	2J	11U	11U
Tetrachloroethene		6U	6U	5U	5U	5U	6U	6U
1,1,2,2-Tetrachloroethane		6U	6U	5U	5U	5U	6U	6U
Toluene		6U	6U	5U	5U	5U	6U	6U
Chlorobenzene		6U	6U	5U	5U	5U	6U	6U
Ethylbenzene		6U	6U	5U	5U	5U	6U	6U
Styrene		6U	6U	5U	5U	5U	6U	6U
Total Xylenes		6U	6U	5U	5U	5U	6U	6U

CAMP LEJEUNE - HPIA

VOLATILE ORGANIC COMPOUNDS IN SOIL SAMPLES

Concentration in ug/kg

CHART = SOIL-V13

	SB-25			SB-26			
	HPSO25-1	HPSO25-2	HPSO25-3	HPSO26-1	HPSO26-1D (HPSOD-8)	HPSO26-2	HPSO26-3
COMPOUND depth:	0-2'	2-4'	6-8'	0-2'	0-2'	6-8'	8-10'
Chloromethane	11U	11U	11U	11U	11U	11U	11U
Bromomethane	11U	11U	11U	11U	11U	11U	11U
Vinyl Chloride	11U	11U	11U	11U	11U	11U	11U
Chloroethane	11U	11U	11U	11U	11U	11U	11U
Methylene Chloride	5U	5U	6U	3BJ	4BJ	4BJ	5BJ
Acetone	10J	12	8J	6J	11	9BJ	19
Carbon Disulfide	5U	5U	6U	5U	5U	6U	6U
1,1-Dichloroethene	5U	5U	6U	5U	5U	6U	6U
1,1-Dichloroethane	5U	5U	6U	5U	5U	6U	6U
1,2-Dichloroethene (total)	5U	5U	6U	5U	5U	6U	6U
Chloroform	5U	5U	6U	5U	5U	6U	6U
1,2-Dichloroethane	5U	5U	6U	5U	5U	6U	6U
2-Butanone	11U	11U	11U	11U	11U	11U	11U
1,1,1-Trichloroethane	5U	5U	6U	5U	5U	6U	6U
Carbon Tetrachloride	5U	5U	6U	5U	5U	6U	6U
Vinyl Acetate	11U	11U	11U	11U	11U	11U	11U
Bromodichloromethane	5U	5U	6U	5U	5U	6U	6U
1,2-Dichloropropane	5U	5U	6U	5U	5U	6U	6U
cis-1,3-Dichloropropene	5U	5U	6U	5U	5U	6U	6U
Trichloroethene	4J	5U	6U	2J	2J	6U	6U
Dibromochloromethane	5U	5U	6U	5U	5U	6U	6U
1,1,2-Trichloroethane	5U	5U	6U	5U	5U	6U	6U
Benzene	5U	5U	6U	5U	5U	6U	6U
trans-1,3-Dichloropropene	5U	5U	6U	5U	5U	6U	6U
Bromoform	5U	5U	6U	5U	5U	6U	6U
4-Methyl-2-Pentanone	11U	11U	11U	11U	11U	11U	11U
2-Hexanone	11U	11U	11U	11U	11U	11U	11U
Tetrachloroethene	5U	5U	6U	5U	5U	6U	6U
1,1,2,2-Tetrachloroethane	5U	5U	6U	5U	5U	6U	6U
Toluene	5U	5U	6U	5U	5U	6U	6U
Chlorobenzene	5U	5U	6U	5U	5U	6U	6U
Ethylbenzene	5U	5U	6U	5U	5U	6U	6U
Styrene	5U	5U	6U	5U	5U	6U	6U
Total Xylenes	5U	5U	6U	5U	5U	6U	6U

CAMP LEJEUNE - HPIA

VOLATILE ORGANIC COMPOUNDS IN SOIL SAMPLES

Concentration in ug/kg

CHART = SOIL-V14

		SB-27			SB-28		
		HPS027-1	HPS027-2	HPS027-3	HPS028-1	HPS028-2	HPS028-3
COMPOUND	depth:	2-4'	4-6'	8-10'	0-2'	2-4'	8-10'
Chloromethane		11U	11U	12U	11U	11U	12U
Bromomethane		11U	11U	12U	11U	11U	12U
Vinyl Chloride		11U	11U	12U	11U	11U	12U
Chloroethane		11U	11U	12U	11U	11U	12U
Methylene Chloride		4BJ	15B	5BJ	5U	6U	6U
Acetone		11U	30B	50B	97	3BJ	8BJ
Carbon Disulfide		5U	5U	6U	5U	6U	6U
1,1-Dichloroethene		5U	5U	6U	5U	6U	6U
1,1-Dichloroethane		5U	5U	6U	5U	6U	6U
1,2-Dichloroethene (total)		5U	5U	6U	5U	6U	6U
Chloroform		5U	5U	6U	5U	6U	6U
1,2-Dichloroethane		5U	5U	6U	5U	6U	6U
2-Butanone		11U	11U	12U	11U	11U	12U
1,1,1-Trichloroethane		5U	5U	6U	5U	6U	6U
Carbon Tetrachloride		5U	5U	6U	5U	6U	6U
Vinyl Acetate		11U	11U	12U	11U	11U	12U
Bromodichloromethane		5U	5U	6U	5U	6U	6U
1,2-Dichloropropane		5U	5U	6U	5U	6U	6U
cis-1,3-Dichloropropene		5U	5U	6U	5U	6U	6U
Trichloroethene		5U	5U	6U	5U	6U	6U
Dibromochloromethane		5U	5U	6U	5U	6U	6U
1,1,2-Trichloroethane		5U	5U	6U	5U	6U	6U
Benzene		5U	5U	6U	5U	6U	6U
trans-1,3-Dichloropropene		5U	5U	6U	5U	6U	6U
Bromoform		5U	5U	6U	5U	6U	6U
4-Methyl-2-Pentanone		2J	11U	12U	11U	11U	12U
2-Hexanone		11U	11U	12U	11U	11U	12U
Tetrachloroethene		5U	5U	6U	5U	6U	6U
1,1,2,2-Tetrachloroethane		5U	5U	6U	5U	6U	6U
Toluene		5U	5U	6U	5U	6U	6U
Chlorobenzene		5U	5U	6U	5U	6U	6U
Ethylbenzene		5U	5U	6U	5U	6U	6U
Styrene		5U	5U	6U	5U	6U	6U
Total Xylenes		5U	5U	6U	5U	6U	6U

PROJECT Camp Lejeune

PREPARED BY E.C. Engfer

DATE 5/9/91

CHECKED BY Judy Dunn

DATE 5-15-91

COMMENTS

CAMP LEJEUNE - HPIA

VOLATILE ORGANIC COMPOUNDS IN SOIL SAMPLES

Concentration in ug/kg

CHART = SOIL-V15

	SB-29			SB-30		
	HPS029-1	HPS029-2	HPS029-3	HPS030-1	HPS030-2	HPS030-3
COMPOUND depth:	0-2'	2-4'	10-12'	0-2'	2-4'	10-12'
Chloromethane	11U	11U	11U	11U	11U	12U
Bromomethane	11U	11U	11U	11U	11U	12U
Vinyl Chloride	11U	11U	11U	11U	11U	12U
Chloroethane	11U	11U	11U	11U	11U	12U
Methylene Chloride	14B	2BJ	8B	2BJ	2BJ	1BJ
Acetone	6BJ	7BJ	6BJ	6BJ	7BJ	7BJ
Carbon Disulfide	5U	5U	5U	6U	6U	6U
1,1-Dichloroethene	5U	5U	5U	6U	6U	6U
1,1-Dichloroethane	5U	5U	5U	6U	6U	6U
1,2-Dichloroethene (total)	5U	5U	5U	6U	6U	6U
Chloroform	5U	5U	5U	6U	6U	6U
1,2-Dichloroethane	5U	5U	5U	6U	6U	6U
2-Butanone	11U	11U	11U	11U	11U	12U
1,1,1-Trichloroethane	5U	5U	5U	6U	6U	6U
Carbon Tetrachloride	5U	5U	5U	6U	6U	6U
Vinyl Acetate	11U	11U	11U	11U	11U	12U
Bromodichloromethane	5U	5U	5U	6U	6U	6U
1,2-Dichloropropane	5U	5U	5U	6U	6U	6U
cis-1,3-Dichloropropene	5U	5U	5U	6U	6U	6U
Trichloroethene	5U	5U	5U	6U	6U	6U
Dibromochloromethane	5U	5U	5U	6U	6U	6U
1,1,2-Trichloroethane	5U	5U	5U	6U	6U	6U
Benzene	5U	5U	5U	6U	6U	6U
trans-1,3-Dichloropropene	5U	5U	5U	6U	6U	6U
Bromoform	5U	5U	5U	6U	6U	6U
4-Methyl-2-Pentanone	11U	11U	11U	11U	11U	12U
2-Hexanone	11U	11U	11U	11U	11U	12U
Tetrachloroethene	5U	5U	5U	6U	6U	6U
1,1,2,2-Tetrachloroethane	5U	5U	5U	6U	6U	6U
Toluene	5U	5U	5U	6U	6U	6U
Chlorobenzene	5U	5U	5U	6U	6U	6U
Ethylbenzene	5U	5U	5U	6U	6U	6U
Styrene	5U	5U	5U	6U	6U	6U
Total Xylenes	5U	5U	5U	6U	6U	6U

CAMP LEJEUNE - HPIA

SEMI-VOLATILE ORGANIC COMPOUNDS IN SOIL SAMPLES

Concentration in ug/kg

CHART = SOIL-S1A

	SB-1		SB-6	SB-10
	HPS01-1	HPS01-1D (HPS0D-1)	HPS06-1	HPS010-1
COMPOUND depth:	0-2'	0-2'	0-2'	0-2'
Phenol	370U	370U	350U	380U
bis(2-Chloroethyl)ether	370U	370U	350U	380U
2-Chlorophenol	370U	370U	350U	380U
1,3-Dichlorobenzene	370U	370U	350U	380U
1,4-Dichlorobenzene	370U	370U	350U	380U
Benzyl Alcohol	370U	370U	350U	380U
1,2-Dichlorobenzene	370U	370U	350U	380U
2-Methylphenol	370U	370U	350U	380U
bis(2-Chloroisopropyl)ether	370U	370U	350U	380U
4-Methylphenol	370U	370U	350U	380U
N-Nitroso-di-n-propylamine	370U	370U	350U	380U
Hexachloroethane	370U	370U	350U	380U
Nitrobenzene	370U	370U	350U	380U
Isophorone	370U	370U	350U	380U
2-Nitrophenol	370U	370U	350U	380U
2,4-Dimethylphenol	370U	370U	350U	380U
Benzoic acid	1800U	1800U	1700U	1900U
bis(2-Chloroethoxy)methane	370U	370U	350U	380U
2,4-Dichlorophenol	370U	370U	350U	380U
1,2,4-Trichlorobenzene	370U	370U	350U	380U
Naphthalene	370U	370U	350U	380U
4-Chloroaniline	370U	370U	350U	380U
Hexachlorobutadiene	370U	370U	350U	380U
4-Chloro-3-methylphenol	370U	370U	350U	380U
2-Methylnaphthalene	370U	370U	350U	380U
Hexachlorocyclopentadiene	370U	370U	350U	380U
2,4,6-Trichlorophenol	370U	370U	350U	380U
2,4,5-Trichlorophenol	1800U	1800U	1700U	1900U
2-Chloronaphthalene	370U	370U	350U	380U
2-Nitroaniline	1800U	1800U	1700U	1900U
Dimethylphthalate	370U	370U	350U	380U
Acenaphthylene	370U	370U	350U	380U
2,6-Dinitrotoluene	370U	370U	350U	380U

PROJECT Camp Lejeune
PREPARED BY Judy Lewis
DATE May 1991
CHECKED BY Ed Kuykd
DATE 5/21/91

CAMP LEJEUNE - HPIA

SEMI-VOLATILE ORGANIC COMPOUNDS IN SOIL SAMPLES

Concentration in ug/kg

CHART=SOIL-S1B

	SB-1		SB-6	SB-10
	HPSO1-1	HPSO1-1D (HPSOD-1)	HPSO6-1	HPSO10-1
COMPOUND depth:	0-2'	0-2'	0-2'	0-2'
3-Nitroaniline	1800U	1800U	1700U	1900U
Acenaphthene	370U	370U	42J	380U
2,4-Dinitrophenol	1800U	1800U	1700U	1900U
4-Nitrophenol	1800U	1800U	1700U	1900U
Dibenzofuran	370U	370U	350U	380U
2,4-Dinitrotoluene	370U	370U	350U	380U
Diethylphthalate	370U	370U	350U	380U
4-Chlorophenyl-phenylether	370U	370U	350U	380U
Fluorene	370U	370U	48J	380U
4-Nitroaniline	1800U	1800U	1700U	1900U
4,6-Dinitro-2-methylphenol	1800U	1800U	1700U	1900U
N-Nitrosodiphenylamine (1)	370U	370U	350U	380U
4-Bromophenyl-phenylether	370U	370U	350U	380U
Hexachlorobenzene	370U	370U	350U	380U
Pentachlorophenol	1800U	1800U	1700U	1900U
Phenanthrene	94J	290J	500	380U
Anthracene	370U	67J	180J	380U
Di-n-butylphthalate	370U	370U	350U	380U
Fluoranthene	100J	360J	690	380U
Pyrene	94J	320J	530	380U
Butylbenzylphthalate	370U	370U	350U	380U
3,3'-Dichlorobenzidine	740U	730U	710U	770U
Benzo(a)anthracene	41J	100J	280J	380U
Chrysene	44J	110J	260J	380U
bis(2-Ethylhexyl)phthalate	370U	370U	16J	380U
Di-n-octylphthalate	370U	370U	350U	380U
Benzo(b)fluoranthene	39J	59J	250J	380U
Benzo(k)fluoranthene	48JX	82JX	210J	380U
Benzo(a)pyrene	370U	65J	240J	380U
Indeno(1,2,3-cd)pyrene	370U	37J	130J	380U
Dibenz(a,h)anthracene	370U	370U	350U	380U
Benzo(g,h,i)perylene	370U	370U	110J	380U

(1) Cannot be separated from Diphenylamine

CAMP LEJEUNE - HPIA

SEMI-VOLATILE ORGANIC COMPOUNDS IN SOIL SAMPLES

Concentration in ug/kg

CHART = SOIL-S2A

	SB-11	SB-15	SB-20
	HPS011-1	HPS015-1	HPS020-1
COMPOUND depth:	0-2'	0-2'	0-2'
Phenol	350U	370U	370U
bis(2-Chloroethyl)ether	350U	370U	370U
2-Chlorophenol	350U	370U	370U
1,3-Dichlorobenzene	350U	370U	370U
1,4-Dichlorobenzene	350U	48J	47J
Benzyl Alcohol	350U	370U	370U
1,2-Dichlorobenzene	350U	370U	370U
2-Methylphenol	350U	370U	370U
bis(2-Chloroisopropyl)ether	350U	370U	370U
4-Methylphenol	350U	370U	370U
N-Nitroso-di-n-propylamine	350U	370U	370U
Hexachloroethane	350U	370U	370U
Nitrobenzene	350U	370U	370U
Isophorone	350U	370U	370U
2-Nitrophenol	350U	370U	370U
2,4-Dimethylphenol	350U	370U	370U
Benzoic acid	1700U	1800U	1800U
bis(2-Chloroethoxy)methane	350U	370U	370U
2,4-Dichlorophenol	350U	370U	370U
1,2,4-Trichlorobenzene	350U	370U	370U
Naphthalene	350U	370U	370U
4-Chloroaniline	350U	370U	370U
Hexachlorobutadiene	350U	370U	370U
4-Chloro-3-methylphenol	350U	370U	370U
2-Methylnaphthalene	350U	370U	370U
Hexachlorocyclopentadiene	350U	370U	370U
2,4,6-Trichlorophenol	350U	370U	370U
2,4,5-Trichlorophenol	1700U	1800U	1800U
2-Chloronaphthalene	350U	370U	370U
2-Nitroaniline	1700U	1800U	1800U
Dimethylphthalate	350U	370U	370U
Acenaphthylene	350U	370U	370U
2,6-Dinitrotoluene	350U	370U	370U

PROJECT Camp Lejeune

PREPARED BY Judy Kuma

DATE May 1991

CHECKED BY [illegible]

DATE 5/21/91

CAMP LEJEUNE - HPIA

SEMI-VOLATILE ORGANIC COMPOUNDS IN SOIL SAMPLES

Concentration in ug/kg

CHART=SOIL-S2B

	SB-11	SB-15	SB-20
	HPS011-1	HPS015-1	HPS020-1
COMPOUND depth:	0-2'	0-2'	0-2'
3-Nitroaniline	1700U	1800U	1800U
Acenaphthene	72J	370U	370U
2,4-Dinitrophenol	1700U	1800U	1800U
4-Nitrophenol	1700U	1800U	1800U
Dibenzofuran	72J	370U	370U
2,4-Dinitrotoluene	350U	370U	370U
Diethylphthalate	350U	370U	370U
4-Chlorophenyl-phenylether	350U	370U	370U
Fluorene	63J	370U	370U
4-Nitroaniline	1700U	1800U	1800U
4,6-Dinitro-2-methylphenol	1700U	1800U	1800U
N-Nitrosodiphenylamine (1)	350U	370U	370U
4-Bromophenyl-phenylether	350U	370U	370U
Hexachlorobenzene	350U	370U	370U
Pentachlorophenol	1700U	1800U	1800U
Phenanthrene	210J	210J	370U
Anthracene	350U	43J	370U
Di-n-butylphthalate	350U	72J	370U
Fluoranthene	200J	370J	370U
Pyrene	120J	290J	370U
Butylbenzylphthalate	350U	370U	370U
3,3'-Dichlorobenzidine	690U	740U	740U
Benzo(a)anthracene	70J	140J	370U
Chrysene	95J	170J	370U
bis(2-Ethylhexyl)phthalate	350U	54J	370U
Di-n-octylphthalate	350U	370U	370U
Benzo(b)fluoranthene	120J	140J	370U
Benzo(k)fluoranthene	79J	150JX	370U
Benzo(a)pyrene	64J	140J	370U
Indeno(1,2,3-cd)pyrene	37J	82J	370U
Dibenz(a,h)anthracene	350U	370U	370U
Benzo(g,h,i)perylene	350U	72J	370U

(1) Cannot be separated from Diphenylamine

CAMP LEJEUNE - HPIA

SEMI-VOLATILE ORGANIC COMPOUNDS IN SOIL SAMPLES

Concentration in ug/kg

CHART = SOIL-S3A

	SB-21	SB-30
	HPS021-1	HPS030-1
COMPOUND depth:	0-2'	0-2'
Phenol	370U	370U
bis(2-Chloroethyl)ether	370U	370U
2-Chlorophenol	370U	370U
1,3-Dichlorobenzene	370U	370U
1,4-Dichlorobenzene	370U	370U
Benzyl Alcohol	370U	370U
1,2-Dichlorobenzene	370U	370U
2-Methylphenol	370U	370U
bis(2-Chloroisopropyl)ether	370U	370U
4-Methylphenol	370U	370U
N-Nitroso-di-n-propylamine	370U	370U
Hexachloroethane	370U	370U
Nitrobenzene	370U	370U
Isophorone	370U	370U
2-Nitrophenol	370U	370U
2,4-Dimethylphenol	370U	370U
Benzoic acid	1800U	1800U
bis(2-Chloroethoxy)methane	370U	370U
2,4-Dichlorophenol	370U	370U
1,2,4-Trichlorobenzene	370U	370U
Naphthalene	370U	220J
4-Chloroaniline	370U	370U
Hexachlorobutadiene	370U	370U
4-Chloro-3-methylphenol	370U	370U
2-Methylnaphthalene	370U	300J
Hexachlorocyclopentadiene	370U	370U
2,4,6-Trichlorophenol	370U	370U
2,4,5-Trichlorophenol	1800U	1800U
2-Chloronaphthalene	370U	370U
2-Nitroaniline	1800U	1800U
Dimethylphthalate	370U	370U
Acenaphthylene	370U	370U
2,6-Dinitrotoluene	370U	370U

PROJECT Camp Lejeune

PREPARED BY Judy Gruza

DATE May 1991

CHECKED BY E.L. Krupp

DATE 5/21/91

COMMENTS

CAMP LEJEUNE - HPIA

SEMI-VOLATILE ORGANIC COMPOUNDS IN SOIL SAMPLES

Concentration in ug/kg

CHART=SOIL-S3B

	SB-21	SB-30
	HPSO21-1	HPSO30-1
COMPOUND depth:	0-2'	0-2'
3-Nitroaniline	1800U	1800U
Acenaphthene	370U	370U
2,4-Dinitrophenol	1800U	1800U
4-Nitrophenol	1800U	1800U
Dibenzofuran	370U	51J
2,4-Dinitrotoluene	370U	370U
Diethylphthalate	370U	370U
4-Chlorophenyl-phenylether	370U	370U
Fluorene	370U	370U
4-Nitroaniline	1800U	1800U
4,6-Dinitro-2-methylphenol	1800U	1800U
N-Nitrosodiphenylamine (1)	370U	370U
4-Bromophenyl-phenylether	370U	370U
Hexachlorobenzene	370U	370U
Pentachlorophenol	1800U	1800U
Phenanthrene	370U	110J
Anthracene	370U	370U
Di-n-butylphthalate	370U	370U
Fluoranthene	370U	370U
Pyrene	370U	370U
Butylbenzylphthalate	370U	370U
3,3'-Dichlorobenzidine	730U	740U
Benzo(a)anthracene	370U	370U
Chrysene	370U	370U
bis(2-Ethylhexyl)phthalate	370U	370U
Di-n-octylphthalate	370U	370U
Benzo(b)fluoranthene	370U	370U
Benzo(k)fluoranthene	370U	370U
Benzo(a)pyrene	370U	370U
Indeno(1,2,3-cd)pyrene	370U	370U
Dibenz(a,h)anthracene	370U	370U
Benzo(g,h,i)perylene	370U	370U

(1) Cannot be separated from Diphenylamine

CAMP LEJEUNE - HPIA

INORGANICS IN SOIL SAMPLES

Concentration in mg/kg

CHART = SOIL-I2

METAL/COMPOUND	depth:	SB-11	SB-15	SB-20
		HPS011-1	HPS015-1	HPS020-1
		0-2'	0-2'	0-2'
Aluminum		1740.00	2180.00	4.10U
Antimony		6.50BN	5.40BN	5.70BN
Arsenic		0.38U	1.40B	0.43U
Barium		13.20B	13.20B	0.39U
Beryllium		0.20U	0.17U	0.20U
Cadmium		3.00	1.20	0.59U
Calcium		19700.00	62700.00	19.60U
Chromium		8.30	9.40	0.59B
Cobalt		2.60B	1.60B	1.20B
Copper		2.00B	8.90	0.39B
Iron		5090.00E	2050.00E	1.80UE
Lead		3.60N*S	84.80N*S	2.30N*
Magnesium		1100.00	1210.00	26.70U
Manganese		155.00	16.00	0.20U
Mercury		0.09U	0.11U	0.09U
Nickel		2.80B	2.40B	2.20B
Potassium		1190.00	125.00B	167.00B
Selenium		0.19U	0.21B	0.21U
Silver		0.79U	0.70U	0.98B
Sodium		242.00B	206.00B	68.00B
Thallium		0.19U	0.18UW	0.21U
Vanadium		2.60B	5.90B	0.59U
Zinc		19.10	61.20	2.50B
Cyanide		0.31U	0.79U	0.70U

PROJECT Camp Lejeune

PREPARED BY [illegible]

DATE May 1991

CHECKED BY [illegible]

DATE 5/16/91

COMMENTS

CAMP LEJEUNE - HPIA

TCLP METALS IN SOIL SAMPLES

Concentration in ug/l

CHART = SOIL-T1

	SB-1		SB-2			SB-3	
	HPSO1-2	HPSO1-3	HPSO2-1	HPSO2-2	HPSO2-2D (HPSOD-2)	HPSO3-1	HPSO3-1D (HPSOD-3)
TCLP METALS depth:	2-4'	4-6'	0-2'	2-4'	2-4'	0-2'	0-2'
Arsenic	112.00B	785.00B	100.00B	75.00B	112.00B	75.00B	92.00B
Barium	334.00	201.00	153.00B	255.00	584.00	382.00	244.00
Cadmium	5.00B	3.00U	6.00B	4.00B	3.00B	27.00	15.00
Chromium	5.00B	6.00B	5.00B	3.00B	6.00B	5.00B	4.00B
Lead	56.00B	56.00B	41.00B	69.00B	54.00B	79.00B	47.00B
Mercury	0.20U	0.20U	0.20U	0.20U	0.20U	0.20U	0.20U
Selenium	121.00BN	530.00BN	65.00BN	110.00BN	63.00UN	76.00BN	100.00BN
Silver	4.00U	4.00U	4.00U	4.00U	4.00U	4.00U	4.00U

PROJECT Camp Lejeune

PREPARED BY Ed Krysfal

DATE 5/91

CHECKED BY [illegible]

DATE 5-21-91

CAMP LEJEUNE - HPIA
TCLP METALS IN SOIL SAMPLES
Concentration in ug/l

CHART = SOIL-T5

		SB-11			SB-12		
		HPSO11-2	HPSO11-3	HPSO11-3D (HPSOD-5)	HPSO12-1	HPSO12-2	HPSO12-3
TCLP METALS	depth:	2-4'	4-6'	4-6'	0-2'	2-4'	8-10'
Arsenic		55.00B	81.00B	63.00B	47.00B*	50.00B*	64.00B*
Barium		268.00E	199.00BE	299.00E	210.00E	206.00E	181.00BE
Cadmium		4.00B	4.00B	3.00U	3.00U	3.00U	3.00U
Chromium		3.00B	7.00B	6.00B	9.00B	9.00B	10.00B
Lead		70.00B	45.00B	30.00B	48.00B	34.00B	27.00B
Mercury		0.20U	0.20U	1.00	0.20U	0.20U	0.20U
Selenium		63.00U	63.00U	63.00U	102.00B	66.00B	87.00B
Silver		4.00U	4.00U	4.00U	4.00U	4.00U	4.00U

PROJECT Camp Lejeune
PREPARED BY Judy Guma
DATE May 1991
CHECKED BY Ed Kupfol
DATE 5/21/91

CAMP LEJEUNE - HPIA

TCLP METALS IN SOIL SAMPLES

Concentration in ug/l

CHART = SOIL-T6

	SB-13			SB-14			SB-15	
	HPS013-1	HPS013-2	HPS013-3	HPS014-1	HPS014-2	HPS014-3	HPS015-2	HPS015-3
TCLP METALS	0-2'	6-8'	8-10'	2-4'	4-6'	8-10'	6-8'	8-10'
Arsenic	70.00B	64.00B	62.00B	49.00B	62.00B	40.00U	59.00B	72.00B
Barium	213.00	162.00B	356.00	183.00B	213.00	246.00	178.00BE	128.00BE
Cadmium	3.00B	3.00B	3.00B	5.00B	3.00B	6.00B	3.00B	5.00B
Chromium	3.00B	9.00B	7.00B	6.00B	7.00B	4.00B	6.00B	4.00B
Lead	27.00U	27.00U	27.00U	40.00B	46.00B	27.00U	48.00B	41.00B
Mercury	0.20U	0.20U	0.20U	0.20U	0.20U	0.20U	0.20U	0.20U
Selenium	74.00B	63.00U	63.00U	63.00U	83.00B	69.00B	82.00B	65.00B
Silver	4.00U	4.00B	4.00U	4.00U	4.00U	4.00U	4.00U	4.00U

PROJECT Camp Lejeune

PREPARED BY E.C. Knypl

DATE 5/91

Judy Duma

5/20/91

CAMP LEJEUNE - HPIA
TCLP METALS IN SOIL SAMPLES
Concentration in ug/l

CHART = SOIL-T7

	SB-16			SB-17			
	HPSO16-1	HPSO16-2	HPSO16-3	HPSO17-1	HPSO17-1D (HPSOD-6)	HPSO17-2	HPSO17-3
TCLP METALS depth:	0-2'	6-8'	8-10'	0-2'	0-2'	6-8'	8-10'
Arsenic	70.00B	51.00B	61.00B	117.00B	102.00B	66.00B	58.00B
Barium	148.00B	179.00B	161.00B	331.00	363.00	165.00B	167.00B
Cadmium	5.00B	3.00U	3.00U	4.00B	6.00B	4.00B	5.00B
Chromium	4.00B	6.00B	6.00B	7.00B	6.00B	6.00B	6.00B
Lead	32.00B	27.00U	31.00B	57.00B	80.00B	27.00U	31.00B
Mercury	0.20U	0.20U	0.20U	0.20U	0.20U	0.20U	0.20U
Selenium	70.00B	82.00B	63.00U	63.00U	84.00B	81.00B	63.00U
Silver	4.00U	4.00U	4.00B	4.00U	4.00B	4.00U	4.00U

PROJECT Camp Lejeune
PREPARED BY Judy Guma
DATE May 1991
CHECKED BY Ed Krupal
DATE 5/21/91
COMMENTS

CAMP LEJEUNE - HPIA
TCLP METALS IN SOIL SAMPLES
Concentration in ug/l

CHART = SOIL-T8

		SB-18			SB-19			SB-20	
		HPS018-1	HPS018-2	HPS018-3	HPS019-1	HPS019-2	HPS019-3	HPS020-2	HPS020-3
TCLP METALS	depth:	4-6'	6-8'	8-10'	0-2'	2-4'	8-10'	6-8'	8-10'
Arsenic		79.00B	81.00B	100.00B	80.00B	90.00B	75.00B	40.00U	40.00U
Barium		174.00B	152.00B	163.00B	245.00	178.00B	179.00B	110.00BE	121.00BE
Cadmium		5.00B	4.00B	4.00B	3.00B	3.00B	5.00B	3.00U	3.00B
Chromium		6.00B	5.00B	5.00B	6.00B	10.00B	3.00B	4.00B	3.00B
Lead		27.00U	45.00B	34.00B	47.00B	41.00B	34.00B	27.00U	27.00U
Mercury		0.20U	0.20U	0.20U	0.20U	0.20U	0.20U	0.20U	0.20U
Selenium		87.00B	74.00B	63.00U	63.00U	114.00B	63.00U	63.00U	63.00U
Silver		4.00U	4.00U	4.00U	5.00B	4.00U	4.00U	4.00U	4.00U

PROJECT Camp Lejeune
PREPARED BY Judy Gluza
DATE May 1991
CHECKED BY Ed Krysol
DATE 5/21/91

CAMP LEJEUNE - HPIA

TCLP METALS IN SOIL SAMPLES

Concentration in ug/l

CHART = SOIL-T9

	SB-21		SB-22			
	HPSO21-2	HPSO21-3	HPSO22-1	HPSO22-1D (HPSOD-7)	HPSO22-2	HPSO22-3
TCLP METALS depth:	2-4	4-6'	0-2'	0-2'	2-4'	4-6'
Arsenic	51.00B	74.00B	58.00B	111.00B	137.00B	40.00U
Barium	110.00BE	140.00BE	320.00NE	247.00NE	298.00NE	335.00NE
Cadmium	4.00B	3.00B	3.00U	3.00U	3.00U	3.00U
Chromium	3.00U	4.00B	4.00B	3.00U	6.00B	4.00B
Lead	42.00B	50.00B	45.00B	46.00B	49.00B	49.00B
Mercury	0.20U	0.70B	0.20U	0.20U	0.20U	0.20U
Selenium	63.00U	86.00B	63.00U	63.00U	63.00U	63.00U
Silver	4.00U	4.00U	4.00U	4.00U	4.00U	4.00U

PROJECT Camp Lejeune

PREPARED BY Ed Knypl

DATE 5/91

CHECKED BY Judy Blume

DATE 5-21-91

CAMP LEJEUNE - HPIA
TCLP METALS IN SOIL SAMPLES
Concentration in ug/l

CHART = SOIL-T10

		SB-23			SB-24			
		HPSO23-1	HPSO23-2	HPSO23-3	HPSO24-1	HPSO24-1D (HPSOD-9)	HPSO24-2	HPSO24-3
TCLP METALS	depth:	0-2'	2-4'	4-6'	0-2'	0-2'	4-6'	6-8'
Arsenic		160.00B*	142.00B*	73.00B*	92.00B*	554.00*	40.00U	42.00B
Barium		297.00E	236.00E	146.00BE	137.00BE	136.00BE	232.00NE	223.00NE
Cadmium		16.00	3.00B	4.00B	3.00B	3.00B	3.00B	3.00B
Chromium		13.00B	10.00B	8.00B	10.00B	7.00B	5.00B	4.00B
Lead		207.00	76.00B	33.00B	27.00U	37.00B	34.00B	55.00B
Mercury		0.20U	0.20U	0.20U	0.20U	0.20U	0.20U	0.20U
Selenium		106.00B	79.00B	133.00B	100.00B	96.00B	63.00U	63.00U
Silver		4.00U	4.00U	4.00U	4.00U	4.00U	4.00U	4.00U

PROJECT Camp Lejeune
PREPARED BY Judy Guma
DATE May 1991
CHECKED BY Ed Knypl
DATE 5/21/91

CAMP LEJEUNE - HPIA
TCLP METALS IN SOIL SAMPLES
Concentration in ug/l

CHART = SOIL-T11

		SB-25			SB-26			
		HPSO25-1	HPSO25-2	HPSO25-3	HPSO26-1	HPSO26-1D (HPSOD-8)	HPSO26-2	HPSO26-3
TCLP METALS	depth:	0-2'	2-4'	6-8'	0-2'	0-2'	6-8'	8-10'
Arsenic		40.00U*	85.00B*	114.00B*	40.00U	56.00B	68.00B	80.00B
Barium		162.00BE	187.00BE	200.00E	596.00NE	609.00NE	176.00BNE	201.00NE
Cadmium		3.00U	3.00U	3.00U	3.00U	3.00U	3.00U	3.00B
Chromium		8.00B	9.00B	10.00B	5.00B	3.00B	6.00B	4.00B
Lead		39.00B	27.00B	29.00B	38.00B	47.00B	28.00B	57.00B
Mercury		0.20U	0.20U	0.20U	0.20U	0.20U	0.20U	0.20U
Selenium		67.00B	63.00U	141.00B	63.00U	63.00U	63.00U	63.00U
Silver		4.00U	4.00U	4.00U	4.00U	4.00U	4.00U	4.00U

PROJECT Camp Lejeune
PREPARED BY Ed Knypek
DATE 5/91
CHECKED BY Judy Luma
5/21/91

CAMP LEJEUNE - HPIA
TCLP METALS IN SOIL SAMPLES
Concentration in ug/l

CHART = SOIL-T12

		SB-27			SB-28		
		HPS027-1	HPS027-2	HPS027-3	HPS028-1	HPS028-2	HPS028-3
TCLP METALS	depth:	2-4'	4-6'	8-10'	0-2'	2-4'	8-10'
Arsenic		50.00B*	90.00B*	46.00B*	64.00B*	40.00U*	102.00B*
Barium		174.00BE	143.00BE	196.00BE	146.00BE	184.00BE	165.00BE
Cadmium		3.00U	3.00U	3.00U	3.00U	3.00U	5.00B
Chromium		9.00B	10.00B	8.00B	11.00B	8.00B	9.00B
Lead		27.00U	55.00B	59.00B	39.00B	33.00B	55.00B
Mercury		0.20U	0.20U	0.20U	0.20U	0.20U	0.20U
Selenium		116.00B	109.00B	123.00B	115.00B	147.00B	119.00B
Silver		4.00U	4.00U	4.00U	4.00U	4.00U	4.00U

PROJECT Camp Lejeune
PREPARED BY Ed Krupski
DATE 5/91
CHECKED BY Judy Gruma
DATE 5-22-91

CAMP LEJEUNE - HPIA
TCLP METALS IN SOIL SAMPLES
Concentration in ug/l

CHART = SOIL-T13

		SB-29			SB-30	
		HPS029-1	HPS029-2	HPS029-3	HPS030-2	HPS030-3
TCLP METALS	depth:	0-2'	2-4'	10-12'	2-4'	10-12'
Arsenic		48.00B	40.00U	40.00U	49.00B	40.00U
Barium		549.00NE	400.00NE	200.00NE	135.00BE	130.00BE
Cadmium		3.00U	3.00U	3.00U	3.00U	4.00B
Chromium		3.00B	4.00B	4.00B	3.00U	6.00B
Lead		40.00B	42.00B	60.00B	43.00B	27.00B
Mercury		0.20U	0.20U	0.20U	0.20U	0.20U
Selenium		63.00U	63.00U	63.00U	63.00U	107.00B
Silver		4.00U	4.00U	4.00U	4.00U	4.00U

PROJECT Camp Lejeune
PREPARED BY Judy Huma
DATE May 1991
CHECKED BY Ed Krupa
DATE 5/21/91

CAMP LEJEUNE - HPIA
PESTICIDES IN SOIL SAMPLES
Concentration in ug/kg

CHART = SOIL-P1

	SB-1				SB-2		
	HPSO1-1	HPSO1-1D (HPSOD-1)	HPSO1-2	HPSO1-3	HPSO2-1	HPSO2-2	HPSO2-2D (HPSOD-2)
PESTICIDE/PCB depth:	0-2'	0-2'	2-4'	4-6'	0-2'	2-4'	2-4'
alpha-BHC	9.0U	8.9U	9.2U	9.2U	8.9U	9.3U	9.5U
beta-BHC	9.0U	8.9U	9.2U	9.2U	8.9U	9.3U	9.5U
delta-BHC	9.0U	8.9U	9.2U	9.2U	8.9U	9.3U	9.5U
gamma-BHC (Lindane)	9.0U	8.9U	9.2U	9.2U	8.9U	9.3U	9.5U
Heptachlor	9.0U	8.9U	9.2U	9.2U	8.9U	9.3U	9.5U
Aldrin	9.0U	8.9U	9.2U	9.2U	8.9U	9.3U	9.5U
Heptachlor epoxide	9.0U	8.9U	9.2U	9.2U	8.9U	9.3U	9.5U
Endosulfan I	9.0U	8.9U	9.2U	9.2U	8.9U	9.3U	9.5U
Dieldrin	18U	18U	18U	18U	18U	19U	19U
4,4'-DDE	18U	18U	18U	18U	18U	19U	19U
Endrin	18U	18U	18U	18U	18U	19U	19U
Endosulfan II	18U	18U	18U	18U	18U	19U	19U
4,4'-DDD	18U	18U	18U	18U	18U	19U	19U
Endosulfan sulfate	18U	18U	18U	18U	18U	19U	19U
4,4'-DDT	18U	18U	18U	18U	18U	19U	19U
Methoxychlor	90U	89U	92U	92U	89U	93U	95U
Endrin ketone	18U	18U	18U	18U	18U	19U	19U
alpha-Chlordane	90U	89U	92U	92U	89U	93U	95U
gamma-Chlordane	90U	89U	92U	92U	89U	93U	95U
Toxaphene	180U	180U	180U	180U	180U	190U	190U
Aroclor-1016	90U	89U	92U	92U	89U	93U	95U
Aroclor-1221	90U	89U	92U	92U	89U	93U	95U
Aroclor-1232	90U	89U	92U	92U	89U	93U	95U
Aroclor-1242	90U	89U	92U	92U	89U	93U	95U
Aroclor-1248	90U	89U	92U	92U	89U	93U	95U
Aroclor-1254	180U	180U	180U	180U	180U	190U	190U
Aroclor-1260	180U	180U	180U	180U	180U	190U	190U

CAMP LEJEUNE-HPIA
PESTICIDES IN SOIL SAMPLES
Concentration in ug/kg

CHART = SOIL-P2

	SB-3		SB-4			
	HPSO3-1	HPSO3-1D (HPSOD-3)	HPSO4-1	HPSO4-2	HPSO4-2D (HPSOD-4)	HPSO4-3
PESTICIDE/PCB depth:	0-2'	0-2'	0-2'	2-4'	2-4'	4-6'
alpha-BHC	8.9U	9.0U	8.9U	9.0U	9.3U	9.4U
beta-BHC	8.9U	9.0U	8.9U	9.0U	9.3U	9.4U
delta-BHC	8.9U	9.0U	8.9U	9.0U	9.3U	9.4U
gamma-BHC (Lindane)	8.9U	9.0U	8.9U	9.0U	9.3U	9.4U
Heptachlor	8.9U	9.0U	8.9U	9.0U	9.3U	9.4U
Aldrin	8.9U	9.0U	8.9U	9.0U	9.3U	9.4U
Heptachlor epoxide	8.9U	9.0U	8.9U	9.0U	9.3U	9.4U
Endosulfan I	8.9U	9.0U	8.9U	9.0U	9.3U	9.4U
Dieldrin	18U	18U	18U	18U	19U	19U
4,4'-DDE	18U	18U	18U	18U	19U	19U
Endrin	18U	18U	18U	18U	19U	19U
Endosulfan II	18U	18U	18U	18U	19U	19U
4,4'-DDD	18U	18U	18U	18U	19U	19U
Endosulfan sulfate	18U	18U	18U	18U	19U	19U
4,4'-DDT	18U	18U	18U	18U	19U	19U
Methoxychlor	89U	90U	89U	90U	93U	94U
Endrin ketone	18U	18U	18U	18U	19U	19U
alpha-Chlordane	89U	90U	89U	90U	93U	94U
gamma-Chlordane	89U	90U	89U	90U	93U	94U
Toxaphene	180U	180U	180U	180U	190U	190U
Aroclor-1016	89U	90U	89U	90U	93U	94U
Aroclor-1221	89U	90U	89U	90U	93U	94U
Aroclor-1232	89U	90U	89U	90U	93U	94U
Aroclor-1242	89U	90U	89U	90U	93U	94U
Aroclor-1248	89U	90U	89U	90U	93U	94U
Aroclor-1254	180U	180U	180U	180U	190U	190U
Aroclor-1260	180U	180U	180U	180U	190U	190U

CAMP LEJEUNE - HPIA
PESTICIDES IN SOIL SAMPLES
Concentration in ug/kg

CHART = SOIL-P3 sy\wp8d\base-

	SB-5			SB-6		
	HPS05-1	HPS05-2	HPS05-3	HPS06-1	HPS06-2	HPS06-3
PESTICIDE/PCB depth:	0-2'	2-4'	4-6'	0-2'	2-4'	4-6'
alpha-BHC	9.0U	9.3U	9.4U	9.0U	9.0U	9.5U
beta-BHC	9.0U	9.3U	9.4U	9.0U	9.0U	9.5U
delta-BHC	9.0U	9.3U	9.4U	9.0U	9.0U	9.5U
gamma-BHC (Lindane)	9.0U	9.3U	9.4U	9.0U	9.0U	9.5U
Heptachlor	9.0U	9.3U	9.4U	9.0U	9.0U	9.5U
Aldrin	9.0U	9.3U	9.4U	9.0U	9.0U	9.5U
Heptachlor epoxide	9.0U	9.3U	9.4U	9.0U	9.0U	9.5U
Endosulfan I	9.0U	9.3U	9.4U	9.0U	9.0U	9.5U
Dieldrin	18U	19U	19U	18U	18U	19U
4,4'-DDE	18U	19U	19U	18U	18U	19U
Endrin	18U	19U	19U	18U	18U	19U
Endosulfan II	18U	19U	19U	18U	18U	19U
4,4'-DDD	18U	19U	19U	18U	18U	19U
Endosulfan sulfate	18U	19U	19U	18U	18U	19U
4,4'-DDT	18U	19U	19U	18U	18U	19U
Methoxychlor	90U	93U	94U	90U	90U	95U
Endrin ketone	18U	19U	19U	18U	18U	19U
alpha-Chlordane	90U	93U	94U	90U	90U	95U
gamma-Chlordane	90U	93U	94U	90U	90U	95U
Toxaphene	180U	190U	190U	180U	180U	190U
Aroclor-1016	90U	93U	94U	90U	90U	95U
Aroclor-1221	90U	93U	94U	90U	90U	95U
Aroclor-1232	90U	93U	94U	90U	90U	95U
Aroclor-1242	90U	93U	94U	90U	90U	95U
Aroclor-1248	90U	93U	94U	90U	90U	95U
Aroclor-1254	180U	190U	190U	180U	180U	190U
Aroclor-1260	180U	190U	190U	180U	180U	190U

CAMP LEJEUNE - HPIA

PESTICIDES IN SOIL SAMPLES

Concentration in ug/kg

CHART = SOIL-P4 sy\wp8d\base-

		SB-7			SB-8		
		HPS07-1	HPS07-2	HPS07-3	HPS08-1	HPS08-2	HPS08-3
PESTICIDE/PCB	depth:	0-2'	2-4'	4-6'	0-2'	2-4'	4-6'
alpha-BHC		9.0U	9.0U	10U	9.4U	9.1U	9.5U
beta-BHC		9.0U	9.0U	10U	9.4U	9.1U	9.5U
delta-BHC		9.0U	9.0U	10U	9.4U	9.1U	9.5U
gamma-BHC (Lindane)		9.0U	9.0U	10U	9.4U	9.1U	9.5U
Heptachlor		9.0U	9.0U	10U	9.4U	9.1U	9.5U
Aldrin		9.0U	9.0U	10U	9.4U	9.1U	9.5U
Heptachlor epoxide		9.0U	9.0U	10U	9.4U	9.1U	9.5U
Endosulfan I		9.0U	9.0U	10U	9.4U	9.1U	9.5U
Dieldrin		18U	18U	20U	19U	18U	19U
4,4'-DDE		18U	18U	20U	19U	18U	19U
Endrin		18U	18U	20U	19U	18U	19U
Endosulfan II		18U	18U	20U	19U	18U	19U
4,4'-DDD		18U	18U	20U	19U	18U	19U
Endosulfan sulfate		18U	18U	20U	19U	18U	19U
4,4'-DDT		18U	18U	20U	19U	18U	19U
Methoxychlor		90U	90U	100U	94U	91U	95U
Endrin ketone		18U	18U	20U	19U	18U	19U
alpha-Chlordane		90U	90U	100U	94U	91U	95U
gamma-Chlordane		90U	90U	100U	94U	91U	95U
Toxaphene		180U	180U	200U	190U	180U	190U
Aroclor-1016		90U	90U	100U	94U	91U	95U
Aroclor-1221		90U	90U	100U	94U	91U	95U
Aroclor-1232		90U	90U	100U	94U	91U	95U
Aroclor-1242		90U	90U	100U	94U	91U	95U
Aroclor-1248		90U	90U	100U	94U	91U	95U
Aroclor-1254		180U	180U	200U	190U	180U	190U
Aroclor-1260		180U	180U	200U	190U	180U	190U

PROJECT Camp Lejeune

PREPARED BY

DATE 3-17-91

COMMENTS

CAMP LEJEUNE - HPIA
PESTICIDES IN SOIL SAMPLES
Concentration in ug/kg

CHART = SOIL-P5

	SB-9			SB-10		
	HPSO9-1	HPSO9-2	HPSO9-3	HPSO10-1	HPSO10-2	HPSO10-3
PESTICIDE/PCB depth:	0-2'	2-4'	4-6'	0-2'	2-4'	4-6'
alpha-BHC	9.1U	9.0U	9.2U	9.2U	9.3U	9.4U
beta-BHC	9.1U	9.0U	9.2U	9.2U	9.3U	9.4U
delta-BHC	9.1U	9.0U	9.2U	9.2U	9.3U	9.4U
gamma-BHC (Lindane)	9.1U	9.0U	9.2U	9.2U	9.3U	9.4U
Heptachlor	9.1U	9.0U	9.2U	9.2U	9.3U	9.4U
Aldrin	9.1U	9.0U	9.2U	9.2U	9.3U	9.4U
Heptachlor epoxide	9.1U	9.0U	9.2U	9.2U	9.3U	9.4U
Endosulfan I	9.1U	9.0U	9.2U	9.2U	9.3U	9.4U
Dieldrin	18U	18U	18U	18U	19U	19U
4,4'-DDE	18U	18U	18U	18U	19U	19U
Endrin	18U	18U	18U	18U	19U	19U
Endosulfan II	18U	18U	18U	18U	19U	19U
4,4'-DDD	18U	18U	18U	18U	19U	19U
Endosulfan sulfate	18U	18U	18U	18U	19U	19U
4,4'-DDT	18U	18U	18U	18U	19U	19U
Methoxychlor	91U	90U	92U	92U	93U	94U
Endrin ketone	18U	18U	18U	18U	19U	19U
alpha-Chlordane	91U	90U	92U	92U	93U	94U
gamma-Chlordane	91U	90U	92U	92U	93U	94U
Toxaphene	180U	180U	180U	180U	190U	190U
Aroclor-1016	91U	90U	92U	92U	93U	94U
Aroclor-1221	91U	90U	92U	92U	93U	94U
Aroclor-1232	91U	90U	92U	92U	93U	94U
Aroclor-1242	91U	90U	92U	92U	93U	94U
Aroclor-1248	91U	90U	92U	92U	93U	94U
Aroclor-1254	180U	180U	180U	180U	190U	190U
Aroclor-1260	180U	180U	180U	180U	190U	190U

CAMP LEJEUNE - HPIA
PESTICIDES IN SOIL SAMPLES
Concentration in ug/kg

CHART = SOIL-P6

	SB-11				SB-12		
	HPSO11-1	HPSO11-2	HPSO11-3	HPSO11-3D (HPSOD-5)	HPSO12-1	HPSO12-2	HPSO12-3
PESTICIDE/PCB depth:	0-2'	2-4'	4-6'	4-6'	0-2'	2-4'	8-10'
alpha-BHC	8.4U	9.0U	9.3U	9.4U	8.9U	8.9U	9.3U
beta-BHC	8.4U	9.0U	9.3U	9.4U	8.9U	8.9U	9.3U
delta-BHC	8.4U	9.0U	9.3U	9.4U	8.9U	8.9U	9.3U
gamma-BHC (Lindane)	8.4U	9.0U	9.3U	9.4U	8.9U	8.9U	9.3U
Heptachlor	8.4U	9.0U	9.3U	9.4U	8.9U	8.9U	9.3U
Aldrin	8.4U	9.0U	9.3U	9.4U	8.9U	8.9U	9.3U
Heptachlor epoxide	8.4U	12	9.3U	9.4U	8.9U	8.9U	9.3U
Endosulfan I	8.4U	16	9.3U	9.4U	8.9U	8.9U	9.3U
Dieldrin	17U	18U	19U	19U	18U	18U	19U
4,4'-DDE	17U	18U	19U	19U	18U	18U	19U
Endrin	17U	18U	19U	19U	18U	18U	19U
Endosulfan II	17U	18U	19U	19U	18U	18U	19U
4,4'-DDD	17U	18U	19U	19U	18U	18U	19U
Endosulfan sulfate	17U	18U	19U	19U	18U	18U	19U
4,4'-DDT	17U	22	19U	19U	18U	18U	19U
Methoxychlor	84U	90U	93U	94U	89U	89U	93U
Endrin ketone	17U	18U	19U	19U	18U	18U	19U
alpha-Chlordane	84U	90U	93U	94U	89U	89U	93U
gamma-Chlordane	84U	90U	93U	94U	89U	89U	93U
Toxaphene	170U	180U	190U	190U	180U	180U	190U
Aroclor-1016	84U	90U	93U	94U	89U	89U	93U
Aroclor-1221	84U	90U	93U	94U	89U	89U	93U
Aroclor-1232	84U	90U	93U	94U	89U	89U	93U
Aroclor-1242	84U	90U	93U	94U	89U	89U	93U
Aroclor-1248	84U	90U	93U	94U	89U	89U	93U
Aroclor-1254	170U	180U	190U	190U	180U	180U	190U
Aroclor-1260	290	1800	1000	670	180U	180U	190U

CAMP LEJEUNE - HPIA

PESTICIDES IN GROUNDWATER (WATER SUPPLY WELLS)

Concentration in ug/l

CHART = HPPEST8 sy\wp8b\hp-pest.wr1 (8)

PESTICIDE/PCB	WS602	WS603	WS634	WS634D (GWDUP9)	WS637	WS642	WS652	WS660
alpha-BHC	.05U	.05U	.05U	.05U	.05U	.05U	.05U	.05U
beta-BHC	.05U	.05U	.05U	.05U	.05U	.05U	.05U	.05U
delta-BHC	.05U	.05U	.05U	.05U	.05U	.05U	.05U	.05U
gamma-BHC (Lindane)	.05U	.05U	.05U	.05U	.05U	.05U	.05U	.05U
Heptachlor	.05U	.05U	.05U	.05U	.05U	.05U	.05U	.05U
Aldrin	.05U	.05U	.05U	.05U	.05U	.05U	.05U	.05U
Heptachlor epoxide	.05U	.05U	.05U	.05U	.05U	.05U	.05U	.05U
Endosulfan I	.05U	.05U	.05U	.05U	.05U	.05U	.05U	.05U
Dieldrin	.10U	.10U	.10U	.10U	.10U	.10U	.10U	.10U
4,4'-DDE	.10U	.10U	.10U	.10U	.10U	.10U	.10U	.10U
Endrin	.10U	.10U	.10U	.10U	.10U	.10U	.10U	.10U
Endosulfan II	.10U	.10U	.10U	.10U	.10U	.10U	.10U	.10U
4,4'-DDD	.10U	.10U	.10U	.10U	.10U	.10U	.10U	.10U
Endosulfan sulfate	.10U	.10U	.10U	.10U	.10U	.10U	.10U	.10U
4,4'-DDT	.10U	.10U	.10U	.10U	.10U	.10U	.10U	.10U
Methoxychlor	.50U	.50U	.50U	.50U	.50U	.50U	.50U	.50U
Endrin ketone	.10U	.10U	.10U	.10U	.10U	.10U	.10U	.10U
alpha-Chlordane	.50U	.50U	.50U	.50U	.50U	.50U	.50U	.50U
gamma-Chlordane	.50U	.50U	.50U	.50U	.50U	.50U	.50U	.50U
Toxaphene	1.0U	1.0U	1.0U	1.0U	1.0U	1.0U	1.0U	1.0U
Aroclor-1016	.50U	.50U	.50U	.50U	.50U	.50U	.50U	.50U
Aroclor-1221	.50U	.50U	.50U	.50U	.50U	.50U	.50U	.50U
Aroclor-1232	.50U	.50U	.50U	.50U	.50U	.50U	.50U	.50U
Aroclor-1242	.50U	.50U	.50U	.50U	.50U	.50U	.50U	.50U
Aroclor-1248	.50U	.50U	.50U	.50U	.50U	.50U	.50U	.50U
Aroclor-1254	1.0U	1.0U	1.0U	1.0U	1.0U	1.0U	1.0U	1.0U
Aroclor-1260	1.0U	1.0U	1.0U	1.0U	1.0U	1.0U	1.0U	1.0U

CAMP LEJEUNE - HPIA
PESTICIDES IN SOIL SAMPLES
Concentration in ug/kg

CHART = SOIL-P7

		SB-13			SB-14		
		HPS013-1	HPS013-2	HPS013-3	HPS014-1	HPS014-2	HPS014-3
PESTICIDE/PCB	depth:	0-2'	6-8'	8-10'	2-4'	4-6'	8-10'
alpha-BHC		9.1U	8.5U	9.3U	9.0U	8.9U	9.4U
beta-BHC		9.1U	8.5U	9.3U	9.0U	8.9U	9.4U
delta-BHC		9.1U	8.5U	9.3U	9.0U	8.9U	9.4U
gamma-BHC (Lindane)		9.1U	8.5U	9.3U	9.0U	8.9U	9.4U
Heptachlor		9.1U	8.5U	9.3U	9.0U	8.9U	9.4U
Aldrin		9.1U	8.5U	9.3U	9.0U	8.9U	9.4U
Heptachlor epoxide		9.1U	8.5U	9.3U	9.0U	8.9U	9.4U
Endosulfan I		9.1U	8.5U	9.3U	9.0U	8.9U	9.4U
Dieldrin		18U	17U	19U	18U	18U	19U
4,4'-DDE		18U	17U	19U	18U	18U	19U
Endrin		18U	17U	19U	18U	18U	19U
Endosulfan II		18U	17U	19U	18U	18U	19U
4,4'-DDD		18U	17U	19U	18U	18U	19U
Endosulfan sulfate		18U	17U	19U	18U	18U	19U
4,4'-DDT		18U	17U	19U	18U	18U	19U
Methoxychlor		91U	85U	93U	90U	89U	94U
Endrin ketone		18U	17U	19U	18U	18U	19U
alpha-Chlordane		91U	85U	93U	90U	89U	94U
gamma-Chlordane		91U	85U	93U	90U	89U	94U
Toxaphene		180U	170U	190U	180U	180U	190U
Aroclor-1016		91U	85U	93U	90U	89U	94U
Aroclor-1221		91U	85U	93U	90U	89U	94U
Aroclor-1232		91U	85U	93U	90U	89U	94U
Aroclor-1242		91U	85U	93U	90U	89U	94U
Aroclor-1248		91U	85U	93U	90U	89U	94U
Aroclor-1254		180U	170U	190U	180U	180U	190U
Aroclor-1260		180U	170U	190U	180U	180U	190U

CAMP LEJEUNE - HPIA
PESTICIDES IN SOIL SAMPLES
Concentration in ug/kg

CHART = SOIL-P8

		SB-15			SB-16		
		HPS015-1	HPS015-2	HPS015-3	HPS016-1	HPS016-2	HPS016-3
PESTICIDE/PCB	depth:	0-2'	6-8'	8-10'	0-2'	6-8'	8-10'
alpha-BHC		8.8U	8.9U	9.0U	8.9U	8.8U	9.7U
beta-BHC		8.8U	8.9U	9.0U	8.9U	8.8U	9.7U
delta-BHC		8.8U	8.9U	9.0U	8.9U	8.8U	9.7U
gamma-BHC (Lindane)		8.8U	8.9U	9.0U	8.9U	8.8U	9.7U
Heptachlor		8.8U	8.9U	9.0U	8.9U	8.8U	9.7U
Aldrin		8.8U	8.9U	9.0U	8.9U	8.8U	9.7U
Heptachlor epoxide		8.8U	8.9U	9.0U	8.9U	8.8U	9.7U
Endosulfan I		8.8U	8.9U	9.0U	8.9U	8.8U	9.7U
Dieldrin		38	18U	18U	18U	18U	19U
4,4'-DDE		97	18U	18U	18U	18U	19U
Endrin		18U	18U	18U	18U	18U	19U
Endosulfan II		18U	18U	18U	18U	18U	19U
4,4'-DDD		18U	18U	18U	18U	18U	19U
Endosulfan sulfate		18U	18U	18U	18U	18U	19U
4,4'-DDT		140	18U	18U	18U	18U	19U
Methoxychlor		88U	89U	90U	89U	88U	97U
Endrin ketone		18U	18U	18U	18U	18U	19U
alpha-Chlordane		88U	89U	90U	89U	88U	97U
gamma-Chlordane		88U	89U	90U	89U	88U	97U
Toxaphene		180U	180U	180U	180U	180U	190U
Aroclor-1016		88U	89U	90U	89U	88U	97U
Aroclor-1221		88U	89U	90U	89U	88U	97U
Aroclor-1232		88U	89U	90U	89U	88U	97U
Aroclor-1242		88U	89U	90U	89U	88U	97U
Aroclor-1248		88U	89U	90U	89U	88U	97U
Aroclor-1254		180U	180U	180U	180U	180U	190U
Aroclor-1260		180U	180U	180U	180U	180U	190U

PROJECT Camp Lejeune
PREPARED BY [illegible] DATE May 1991
CHECKED BY [illegible] DATE 5/30/91

CAMP LEJEUNE - HPIA
PESTICIDES IN SOIL SAMPLES
Concentration in ug/kg

CHART = SOIL-P9

	SB-17				SB-18		
	HPSO17-1	HPSO17-1D (HPSOD-6)	HPSO17-2	HPSO17-3	HPSO18-1	HPSO18-2	HPSO18-3
PESTICIDE/PCB depth:	0-2'	0-2'	6-8'	8-10'	4-6'	6-8'	8-10'
alpha-BHC	8.9U	8.8U	8.8U	9.5U	9.1U	8.9U	9.0U
beta-BHC	8.9U	8.8U	8.8U	9.5U	9.1U	8.9U	9.0U
delta-BHC	8.9U	8.8U	8.8U	9.5U	9.1U	8.9U	9.0U
gamma-BHC (Lindane)	8.9U	8.8U	8.8U	9.5U	9.1U	8.9U	9.0U
Heptachlor	8.9U	8.8U	8.8U	9.5U	9.1U	8.9U	9.0U
Aldrin	8.9U	8.8U	8.8U	9.5U	9.1U	8.9U	9.0U
Heptachlor epoxide	8.9U	8.8U	8.8U	9.5U	9.1U	8.9U	9.0U
Endosulfan I	8.9U	8.8U	8.8U	9.5U	9.1U	8.9U	9.0U
Dieldrin	18U	18U	18U	19U	18U	18U	18U
4,4'-DDE	18U	18U	18U	19U	18U	18U	18U
Endrin	18U	18U	18U	19U	18U	18U	18U
Endosulfan II	18U	18U	18U	19U	18U	18U	18U
4,4'-DDD	18U	18U	18U	19U	18U	18U	18U
Endosulfan sulfate	18U	18U	18U	19U	18U	18U	18U
4,4'-DDT	18U	18U	18U	19U	18U	18U	18U
Methoxychlor	89U	88U	88U	95U	91U	89U	90U
Endrin ketone	18U	18U	18U	19U	18U	18U	18U
alpha-Chlordane	89U	88U	88U	95U	91U	89U	90U
gamma-Chlordane	89U	88U	88U	95U	91U	89U	90U
Toxaphene	180U	180U	180U	190U	180U	180U	180U
Aroclor-1016	89U	88U	88U	95U	91U	89U	90U
Aroclor-1221	89U	88U	88U	95U	91U	89U	90U
Aroclor-1232	89U	88U	88U	95U	91U	89U	90U
Aroclor-1242	89U	88U	88U	95U	91U	89U	90U
Aroclor-1248	89U	88U	88U	95U	91U	89U	90U
Aroclor-1254	780	580	180U	190U	180U	180U	180U
Aroclor-1260	180U	180U	180U	190U	180U	180U	180U

CAMP LEJEUNE - HPIA
PESTICIDES IN SOIL SAMPLES
Concentration in ug/kg

CHART = SOIL-P10

	SB-19			SB-20		
	HPSO19-1	HPSO19-2	HPSO19-3	HPSO20-1	HPSO20-2	HPSO20-3
PESTICIDE/PCB depth:	0-2'	2-4'	8-10'	0-2'	6-8'	8-10'
alpha-BHC	13U	8.9U	9.5U	8.9U	8.4U	9.0U
beta-BHC	13U	8.9U	9.5U	8.9U	8.4U	9.0U
delta-BHC	13U	8.9U	9.5U	8.9U	8.4U	9.0U
gamma-BHC (Lindane)	13U	8.9U	9.5U	8.9U	8.4U	9.0U
Heptachlor	13U	8.9U	9.5U	8.9U	8.4U	9.0U
Aldrin	13U	8.9U	9.5U	8.9U	8.4U	9.0U
Heptachlor epoxide	13U	8.9U	9.5U	8.9U	8.4U	9.0U
Endosulfan I	13U	8.9U	9.5U	8.9U	8.4U	9.0U
Dieldrin	26U	18U	19U	18U	17U	18U
4,4'-DDE	26U	18U	19U	18U	17U	18U
Endrin	26U	18U	19U	18U	17U	18U
Endosulfan II	26U	18U	19U	18U	17U	18U
4,4'-DDD	26U	18U	19U	18U	17U	18U
Endosulfan sulfate	26U	18U	19U	18U	17U	18U
4,4'-DDT	26U	18U	19U	18U	17U	18U
Methoxychlor	130U	89U	95U	89U	84U	90U
Endrin ketone	26U	18U	19U	18U	17U	18U
alpha-Chlordane	130U	89U	95U	89U	84U	90U
gamma-Chlordane	130U	89U	95U	89U	84U	90U
Toxaphene	260U	180U	190U	180U	170U	180U
Aroclor-1016	130U	89U	95U	89U	84U	90U
Aroclor-1221	130U	89U	95U	89U	84U	90U
Aroclor-1232	130U	89U	95U	89U	84U	90U
Aroclor-1242	130U	89U	95U	89U	84U	90U
Aroclor-1248	130U	89U	95U	89U	84U	90U
Aroclor-1254	260U	180U	190U	180U	170U	180U
Aroclor-1260	260U	180U	190U	180U	170U	180U

CAMP LEJEUNE - HPIA
PESTICIDES IN SOIL SAMPLES
Concentration in ug/kg

CHART = SOIL-P11

	SB-21			SB-22			
	HPSO21-1	HPSO21-2	HPSO21-3	HPSO22-1	HPSO22-1D (HPSOD-7)	HPSO22-2	HPSO22-3
PESTICIDE/PCB depth:	0-2'	2-4'	4-6'	0-2'	0-2'	2-4'	4-6'
alpha-BHC	8.9U	9.2U	10U	9.2U	9.2U	9.0U	10U
beta-BHC	8.9U	9.2U	10U	9.2U	9.2U	9.0U	10U
delta-BHC	8.9U	9.2U	10U	9.2U	9.2U	9.0U	10U
gamma-BHC (Lindane)	8.9U	9.2U	10U	9.2U	9.2U	9.0U	10U
Heptachlor	8.9U	9.2U	10U	9.2U	9.2U	9.0U	10U
Aldrin	8.9U	9.2U	10U	9.2U	9.2U	9.0U	10U
Heptachlor epoxide	8.9U	9.2U	10U	9.2U	9.2U	9.0U	10U
Endosulfan I	8.9U	9.2U	10U	9.2U	9.2U	9.0U	10U
Dieldrin	18U	18U	20U	18U	18U	18U	21U
4,4'-DDE	18U	18U	20U	18U	18U	18U	21U
Endrin	18U	18U	20U	18U	18U	18U	21U
Endosulfan II	18U	18U	20U	18U	18U	18U	21U
4,4'-DDD	18U	18U	20U	18U	18U	18U	21U
Endosulfan sulfate	18U	18U	20U	18U	18U	18U	21U
4,4'-DDT	18U	18U	20U	18U	18U	18U	21U
Methoxychlor	89U	92U	100U	92U	92U	90U	100U
Endrin ketone	18U	18U	20U	18U	18U	18U	21U
alpha-Chlordane	89U	92U	100U	92U	92U	90U	100U
gamma-Chlordane	89U	92U	100U	92U	92U	90U	100U
Toxaphene	180U	180U	200U	180U	180U	180U	210U
Aroclor-1016	89U	92U	100U	92U	92U	90U	100U
Aroclor-1221	89U	92U	100U	92U	92U	90U	100U
Aroclor-1232	89U	92U	100U	92U	92U	90U	100U
Aroclor-1242	89U	92U	100U	92U	92U	90U	100U
Aroclor-1248	89U	92U	100U	92U	92U	90U	100U
Aroclor-1254	180U	180U	200U	180U	180U	180U	210U
Aroclor-1260	180U	180U	200U	180U	180U	180U	210U

CAMP LEJEUNE - HPIA
PESTICIDES IN SOIL SAMPLES
Concentration in ug/kg

CHART = SOIL-P12

	SB-23			SB-24			
	HPSO23-1	HPSO23-2	HPSO23-3	HPSO24-1	HPSO24-1D (HPSOD-9)	HPSO24-2	HPSO24-3
PESTICIDE/PCB depth:	0-2'	2-4'	4-6'	0-2'	0-2'	4-6'	6-8'
alpha-BHC	8.9U	9.2U	8.7U	8.6U	8.4U	8.9U	9.1U
beta-BHC	8.9U	9.2U	8.7U	8.6U	8.4U	8.9U	9.1U
delta-BHC	8.9U	9.2U	8.7U	8.6U	8.4U	8.9U	9.1U
gamma-BHC (Lindane)	8.9U	9.2U	8.7U	8.6U	8.4U	8.9U	9.1U
Heptachlor	8.9U	9.2U	8.7U	8.6U	8.4U	8.9U	9.1U
Aldrin	8.9U	9.2U	8.7U	8.6U	8.4U	8.9U	9.1U
Heptachlor epoxide	8.9U	9.2U	8.7U	8.6U	8.4U	8.9U	9.1U
Endosulfan I	8.9U	9.2U	8.7U	8.6U	8.4U	8.9U	9.1U
Dieldrin	92	18U	17U	17U	17U	18U	18U
4,4'-DDE	78	18U	17U	17U	17U	18U	18U
Endrin	18U	18U	17U	17U	17U	18U	18U
Endosulfan II	18U	18U	17U	17U	17U	18U	18U
4,4'-DDD	18U	18U	17U	17U	17U	18U	18U
Endosulfan sulfate	18U	18U	17U	17U	17U	18U	18U
4,4'-DDT	40	18U	17U	17U	17U	18U	18U
Methoxychlor	89U	92U	87U	86U	84U	89U	91U
Endrin ketone	18U	18U	17U	17U	17U	18U	18U
alpha-Chlordane	89U	92U	87U	86U	84U	89U	91U
gamma-Chlordane	89U	92U	87U	86U	84U	89U	91U
Toxaphene	180U	180U	170U	170U	170U	180U	180U
Aroclor-1016	89U	92U	87U	86U	84U	89U	91U
Aroclor-1221	89U	92U	87U	86U	84U	89U	91U
Aroclor-1232	89U	92U	87U	86U	84U	89U	91U
Aroclor-1242	89U	92U	87U	86U	84U	89U	91U
Aroclor-1248	89U	92U	87U	86U	84U	89U	91U
Aroclor-1254	180U	180U	170U	170U	170U	180U	180U
Aroclor-1260	180U	180U	170U	170U	170U	180U	180U

CAMP LEJEUNE - HPIA
PESTICIDES IN SOIL SAMPLES
Concentration in ug/kg

CHART = SOIL-P13

	SB-25			SB-26			
	HPSO25-1	HPSO25-2	HPSO25-3	HPSO26-1	HPSO26-1D (HPSOD-8)	HPSO26-2	HPSO26-3
PESTICIDE/PCB depth:	0-2'	2-4'	6-8'	0-2'	0-2'	6-8'	8-10'
alpha-BHC	8.4U	8.5U	8.9U	8.4U	8.4U	9.2U	9.0U
beta-BHC	8.4U	8.5U	8.9U	8.4U	8.4U	9.2U	9.0U
delta-BHC	8.4U	8.5U	8.9U	8.4U	8.4U	9.2U	9.0U
gamma-BHC (Lindane)	8.4U	8.5U	8.9U	8.4U	8.4U	9.2U	9.0U
Heptachlor	8.4U	8.5U	8.9U	8.4U	8.4U	9.2U	9.0U
Aldrin	8.4U	8.5U	8.9U	8.4U	8.4U	9.2U	9.0U
Heptachlor epoxide	8.4U	8.5U	8.9U	8.4U	8.4U	9.2U	9.0U
Endosulfan I	8.4U	8.5U	8.9U	8.4U	8.4U	9.2U	9.0U
Dieldrin	17U	17U	18U	17U	17U	18U	18U
4,4'-DDE	17U	17U	18U	17U	17U	18U	18U
Endrin	17U	17U	18U	17U	17U	18U	18U
Endosulfan II	17U	17U	18U	17U	17U	18U	18U
4,4'-DDD	17U	17U	18U	17U	17U	18U	18U
Endosulfan sulfate	17U	17U	18U	17U	17U	18U	18U
4,4'-DDT	17U	17U	18U	17U	17U	18U	18U
Methoxychlor	84U	85U	89U	84U	84U	92U	90U
Endrin ketone	17U	17U	18U	17U	17U	18U	18U
alpha-Chlordane	84U	85U	89U	84U	84U	92U	90U
gamma-Chlordane	84U	85U	89U	84U	84U	92U	90U
Toxaphene	170U	170U	180U	170U	170U	180U	180U
Aroclor-1016	84U	85U	89U	84U	84U	92U	90U
Aroclor-1221	84U	85U	89U	84U	84U	92U	90U
Aroclor-1232	84U	85U	89U	84U	84U	92U	90U
Aroclor-1242	84U	85U	89U	84U	84U	92U	90U
Aroclor-1248	84U	85U	89U	84U	84U	92U	90U
Aroclor-1254	170U	170U	180U	170U	170U	180U	180U
Aroclor-1260	170U	170U	180U	170U	170U	180U	180U

CAMP LEJEUNE - HPIA
PESTICIDES IN SOIL SAMPLES
Concentration in ug/kg

CHART = SOIL-P14

	SB-27			SB-28		
	HPS027-1	HPS027-2	HPS027-3	HPS028-1	HPS028-2	HPS028-3
PESTICIDE/PCB depth:	2-4'	4-6'	8-10'	0-2'	2-4'	8-10'
alpha-BHC	8.5U	8.7U	9.7U	8.6U	8.8U	9.7U
beta-BHC	8.5U	8.7U	9.7U	8.6U	8.8U	9.7U
delta-BHC	8.5U	8.7U	9.7U	8.6U	8.8U	9.7U
gamma-BHC (Lindane)	8.5U	8.7U	9.7U	8.6U	8.8U	9.7U
Heptachlor	8.5U	8.7U	9.7U	8.6U	8.8U	9.7U
Aldrin	8.5U	8.7U	9.7U	8.6U	8.8U	9.7U
Heptachlor epoxide	8.5U	8.7U	9.7U	8.6U	8.8U	9.7U
Endosulfan I	8.5U	8.7U	9.7U	8.6U	8.8U	9.7U
Dieldrin	17U	17U	19U	17U	18U	19U
4,4'-DDE	17U	17U	19U	17U	18U	19U
Endrin	17U	17U	19U	17U	18U	19U
Endosulfan II	17U	17U	19U	17U	18U	19U
4,4'-DDD	17U	17U	19U	17U	18U	19U
Endosulfan sulfate	17U	17U	19U	17U	18U	19U
4,4'-DDT	17U	17U	19U	17U	18U	19U
Methoxychlor	85U	87U	97U	86U	88U	97U
Endrin ketone	17U	17U	19U	17U	18U	19U
alpha-Chlordane	85U	87U	97U	86U	88U	97U
gamma-Chlordane	85U	87U	97U	86U	88U	97U
Toxaphene	170U	170U	190U	170U	180U	190U
Aroclor-1016	85U	87U	97U	86U	88U	97U
Aroclor-1221	85U	87U	97U	86U	88U	97U
Aroclor-1232	85U	87U	97U	86U	88U	97U
Aroclor-1242	85U	87U	97U	86U	88U	97U
Aroclor-1248	85U	87U	97U	86U	88U	97U
Aroclor-1254	170U	170U	190U	170U	180U	190U
Aroclor-1260	170U	170U	190U	170U	180U	190U

CAMP LEJEUNE - HPIA
PESTICIDES IN SOIL SAMPLES
Concentration in ug/kg

CHART = SOIL-P15

	SB-29			SB-30		
	HPSO29-1	HPSO29-2	HPSO29-3	HPSO30-1	HPSO30-2	HPSO30-3
PESTICIDE/PCB depth:	0-2'	2-4'	10-12'	0-2'	2-4'	10-12'
alpha-BHC	9.0U	8.8U	9.2U	9.0U	9.0U	9.6U
beta-BHC	9.0U	8.8U	9.2U	9.0U	9.0U	9.6U
delta-BHC	9.0U	8.8U	9.2U	9.0U	9.0U	9.6U
gamma-BHC (Lindane)	9.0U	8.8U	9.2U	9.0U	9.0U	9.6U
Heptachlor	9.0U	8.8U	9.2U	9.0U	9.0U	9.6U
Aldrin	9.0U	8.8U	9.2U	9.0U	9.0U	9.6U
Heptachlor epoxide	9.0U	8.8U	9.2U	9.0U	9.0U	9.6U
Endosulfan I	9.0U	8.8U	9.2U	9.0U	9.0U	9.6U
Dieldrin	18U	18U	18U	18U	18U	19U
4,4'-DDE	18U	18U	18U	18U	18U	19U
Endrin	18U	18U	18U	18U	18U	19U
Endosulfan II	18U	18U	18U	18U	18U	19U
4,4'-DDD	18U	18U	18U	18U	18U	19U
Endosulfan sulfate	18U	18U	18U	18U	18U	19U
4,4'-DDT	18U	18U	18U	18U	18U	19U
Methoxychlor	90U	88U	92U	90U	90U	96U
Endrin ketone	18U	18U	18U	18U	18U	19U
alpha-Chlordane	90U	88U	92U	90U	90U	96U
gamma-Chlordane	90U	88U	92U	90U	90U	96U
Toxaphene	180U	180U	180U	180U	180U	190U
Aroclor-1016	90U	88U	92U	90U	90U	96U
Aroclor-1221	90U	88U	92U	90U	90U	96U
Aroclor-1232	90U	88U	92U	90U	90U	96U
Aroclor-1242	90U	88U	92U	90U	90U	96U
Aroclor-1248	90U	88U	92U	90U	90U	96U
Aroclor-1254	180U	180U	180U	180U	180U	190U
Aroclor-1260	180U	180U	180U	180U	180U	190U

APPENDIX I

CHARACTERIZATION INVESTIGATION
SHALLOW MONITOR WELLS
ANALYTICAL RESULTS

ANALYTICAL DATA

SHALLOW GROUNDWATER MONITORING WELLS
SET 1 DATA

ENVIRONMENTAL SCIENCE & ENGINEERING 12/01/87 STATUS: FINAL PAGE# 1

PROJECT NUMBER 86447 0400 PROJECT NAME NAVY - LEJEUNE
FIELD GROUP LJHP-1 LAB COORDINATOR J.D. SHAMIS

SAMPLE ID/#

PARAMETERS UNITS	STORET # METHOD	22GW1 LJHP-1 1	22GW2 LJHP-1 2	HPGW1 LJHP-1 3	HPGW2 LJHP-1 4	HPGW3 LJHP-1 5	HPGW4 LJHP-1 6	HPGW5 LJHP-1 7	HPGW6 LJHP-1 8	HPGW7 LJHP-1 9	HPGW8 LJHP-1 10	HPGW9 LJHP-1 11	HPGW10 LJHP-1 12	HPGW11 LJHP-1 13	HPGW12 LJHP-1 14	HPGW13 LJHP-1 15
DATE		01/09/87	01/09/87	01/09/87	01/09/87	01/09/87	01/12/87	01/12/87	01/12/87	01/12/87	01/13/87	01/14/87	01/14/87	01/14/87	01/14/87	01/14/87
TIME		11:02	10:05	12:05	13:20	14:25	10:00	12:05	14:08	16:40	14:55	10:25	11:45	12:55	13:59	15:55
LEAD,TOTAL UG/L	1051 ICAP	33.0	28.0	27.0	<27.0	40.0	29.0	<27.0	<27.0	<27.0	<27.0	130	29.0	<27.0	<27.0	<27.0
OIL&GR,IR MG/L	560 1	7	0.8	0.7	0.7	0.8	0.3	0.9	0.2	3	0.1	32	0.4	0.3	0.2	0.2
BENZENE UG/L	34030 GMS	12000	<1.0	43	12	1.4	25	<1.0	<1.0	<1.0	<1.0	<100	<1.0	<1.0	<1.0	<1.0
BROMODICHLOROMETHANE UG/L	32101 GMS	<22	<2.2	<2.2	<2.2	<2.2	<2.2	<2.2	<2.2	<2.2	<2.2	<220	<2.2	<2.2	<2.2	<2.2
BROMOFORM UG/L	32104 GMS	<47	<4.7	<4.7	<4.7	<4.7	<4.7	<4.7	<4.7	<4.7	<4.7	<470	<4.7	<4.7	<4.7	<4.7
BROMOMETHANE UG/L	34413 GMS	<58	<5.8	<5.8	<5.8	<5.8	<5.8	<5.8	<5.8	<5.8	<5.8	<580	<5.8	<5.8	<5.8	<5.8
CARBON TETRACHLORIDE UG/L	32102 GMS	<28	<2.8	<2.8	<2.8	<2.8	<2.8	<2.8	<2.8	<2.8	<2.8	<280	<2.8	<2.8	<2.8	<2.8
CHLOROBENZENE UG/L	34301 GMS	<60	<6.0	<6.0	<6.0	<6.0	<6.0	<6.0	<6.0	<6.0	<6.0	<600	<6.0	<6.0	<6.0	<6.0
CHLOROETHANE UG/L	34311 GMS	<82	<8.2	<8.2	<8.2	<8.2	<8.2	<8.2	<8.2	<8.2	<8.2	<820	<8.2	<8.2	<8.2	<8.2
2-CHLOROETHYLVINYL ETHER UG/L	34576 GMS	<150	<26	<15	<15	<15	<15	<15	<15	<15	<15	<1500	<15	<15	<15	<15
CHLOROFORM UG/L	32106 GMS	<16	<1.6	<1.6	<1.6	<1.6	<1.6	<1.6	<1.6	<1.6	<1.6	<160	<1.6	3.2	<1.6	<1.6
CHLOROMETHANE UG/L	34418 GMS	<43	<4.3	<4.3	5.0	<4.3	<4.3	<4.3	<4.3	<4.3	7.2	<430	<4.3	<4.3	<4.3	<4.3
DIBROMOCHLOROMETHANE UG/L	32105 GMS	<31	<3.1	<3.1	<3.1	<3.1	<3.1	<3.1	<3.1	<3.1	<3.1	<310	<3.1	<3.1	<3.1	<3.1
1,1-DICHLOROETHANE UG/L	34496 GMS	<47	<4.7	<4.7	<4.7	<4.7	<4.7	<4.7	<4.7	<4.7	<4.7	<470	<4.7	<4.7	<4.7	<4.7
1,2-DICHLOROETHANE UG/L	34531 GMS	<28	<2.8	<2.8	<2.8	<2.8	<2.8	<2.8	<2.8	<2.8	<2.8	<280	<2.8	<2.8	<2.8	<2.8
1,1-DICHLOROETHYLENE UG/L	34501 GMS	<28	<2.8	<2.8	<2.8	<2.8	<2.8	<2.8	<2.8	<2.8	<2.8	<280	<2.8	<2.8	<2.8	<2.8
TRANS-1,2-DICHLORO ETHENE UG/L	34546 GMS	<16	<1.6	<1.6	<1.6	<1.6	1.9	<1.6	<1.6	<1.6	<1.6	740	<1.6	13	<1.6	<1.6
1,2-DICHLOROPROPANE UG/L	34541 GMS	<60	<6.0	<6.0	<6.0	<6.0	<6.0	<6.0	<6.0	<6.0	<6.0	<600	<6.0	<6.0	<6.0	<6.0
CIS-1,3-DICHLORO PROPENE UG/L	34704 GMS	<50	<5.0	<5.0	<5.0	<5.0	<5.0	<5.0	<5.0	<5.0	<5.0	<500	<5.0	<5.0	<5.0	<5.0
TRANS-1,3-DICHLORO PROPENE UG/L	34699 GMS	<64	<6.4	<6.4	<6.4	<6.4	<6.4	<6.4	<6.4	<6.4	<6.4	<640	<6.4	<6.4	<6.4	<6.4

PROJECT NUMBER 86447 0400 PROJECT NAME NAVY - LEJEUNE
FIELD GROUP LJHP-1 LAB COORDINATOR J.D. SHAMIS

SAMPLE ID/#

PARAMETERS UNITS	STORET # METHOD	22GW1 LJHP-1 1	22GW2 LJHP-1 2	HPGW1 LJHP-1 3	HPGW2 LJHP-1 4	HPGW3 LJHP-1 5	HPGW4 LJHP-1 6	HPGW5 LJHP-1 7	HPGW6 LJHP-1 8	HPGW7 LJHP-1 9	HPGW8 LJHP-1 10	HPGW9 LJHP-1 11	HPGW10 LJHP-1 12	HPGW11 LJHP-1 13	HPGW12 LJHP-1 14	HPGW13 LJHP-1 15
DATE		01/09/87	01/09/87	01/09/87	01/09/87	01/09/87	01/12/87	01/12/87	01/12/87	01/12/87	01/13/87	01/14/87	01/14/87	01/14/87	01/14/87	01/14/87
TIME		11:02	10:05	12:05	13:20	14:25	10:00	12:05	14:08	16:40	14:55	10:25	11:45	12:55	13:59	15:55
ETHYLBENZENE UG/L	34371 GMS	1800	<7.2	12	<7.2	8.2	<7.2	<7.2	<7.2	<7.2	<7.2	1100	<7.2	<7.2	<7.2	<7.2
METHYLENE CHLORIDE UG/L	34423 GMS	<28	7.3	<2.8	<2.8	<2.8	<2.8	<2.8	<2.8	<2.8	20	<280	<2.8	<2.8	<2.8	<2.8
1,1,2,2-TETRACHLORO ETHANE UG/L	34516 GMS	<41	<4.1	<4.1	<4.1	<4.1	<4.1	<4.1	<4.1	<4.1	<4.1	<410	<4.1	<4.1	<4.1	<4.1
TETRACHLOROETHENE UG/L	34475 GMS	<30	<3.0	<3.0	<3.0	<3.0	<3.0	<3.0	<3.0	<3.0	<3.0	<300	<3.0	<3.0	<3.0	<3.0
TOLUENE UG/L	34010 GMS	15000	<6.0	100	38	<6.0	35	<6.0	<6.0	<6.0	<6.0	<600	<6.0	<6.0	<6.0	<6.0
1,1,1-TRICHL'ETHANE UG/L	34506 GMS	<38	<3.8	<3.8	<3.8	<3.8	<3.8	<3.8	<3.8	<3.8	<3.8	<380	<3.8	<3.8	<3.8	<3.8
1,1,2-TRICHL'ETHANE UG/L	34511 GMS	<50	<5.0	<5.0	<5.0	<5.0	<5.0	<5.0	<5.0	<5.0	<5.0	<500	<5.0	<5.0	<5.0	<5.0
TRICHLOROETHENE UG/L	39180 GMS	<30	<1.0	<3.0	<3.0	<3.0	3.4	<3.0	<3.0	<3.0	<3.0	5000	7.4	49	<3.0	<3.0
TRICHLOROFLUORO-METHANE UG/L	34488 GMS	<32	<3.2	<3.2	<3.2	<3.2	<3.2	<3.2	<3.2	<3.2	14	<320	<3.2	<3.2	<3.2	<3.2
VINYL CHLORIDE UG/L	39175 GMS	<10	<1.0	<1.0	<1.0	<1.0	<1.0	<1.0	<1.0	<1.0	<1.0	<100	<1.0	<1.0	<1.0	<1.0
ACROLEIN UG/L	34210 GMS	<1000	<100	<100	<100	<100	<100	<100	<100	<100	<100	<10000	<100	<100	<100	<100
ACRYLONITRILE UG/L	34215 GMS	<1000	<100	<100	<100	<100	<100	<100	<100	<100	<100	<10000	<100	<100	<100	<100
DICHLORODIFLUORO-METHANE UG/L	34668 GMS	<100	<10	<10	<10	<10	<10	<10	<10	<10	<10	<1000	<10	<10	<10	<10
M-XYLENE UG/L	98553 GMS	4400	<12	30	14	<12	<12	<12	<12	<12	<12	2400	<12	<12	<12	<12
O-AND/OR-P XYLENE UG/L	98554 GMS	4600	<12	32	14	<12	<12	<12	<12	<12	<12	2100	<12	<12	<12	<12
METHYL ETHYL KETONE UG/L	81595 GMS	<480	<48	<48	<48	<48	<48	<48	<48	<48	<48	<4800	<48	<48	<48	<48
METHYL ISOBUT'KETONE UG/L	81596 GMS	<120	<12	<12	<12	<12	<12	<12	<12	<12	<12	<1200	<12	<12	<12	<12

PROJECT NUMBER 86447 0400 PROJECT NAME NAVY - LEJEUNE
FIELD GROUP LJHP-1 LAB COORDINATOR J.D. SHAMIS

SAMPLE ID/#

PARAMETERS UNITS	STORET # METHOD	HPGW14 LJHP-1 16	HPGW15 LJHP-1 17	HPGW16 LJHP-1 18	HPGW17 LJHP-1 19	HPGW18 LJHP-1 20	HPGW19 LJHP-1 21	HPGW20 LJHP-1 22	HPGW21 LJHP-1 23	HPGW22 LJHP-1 24	HPGW23 LJHP-1 25	HPGW24 LJHP-1 26	HPGW25 LJHP-1 27	HPGW26 LJHP-1 28	HPGW29 LJHP-1 31
DATE		01/14/87	01/15/87	01/15/87	01/15/87	01/15/87	01/16/87	01/16/87	01/16/87	01/19/87	01/19/87	01/19/87	01/19/87	01/19/87	01/20/87
TIME		17:37	10:46	12:27	13:56	17:25	10:12	11:50	14:35	10:20	11:30	14:00	14:50	16:30	11:20
LEAD,TOTAL UG/L	1051 ICAP	<27.0	46.0	45.0	<27.0	<27.0	<27.0	46.0	<27.0	27.0	38.0	<27.0	<27.0	31.0	<27.0
OIL&GR,IR MG/L	560 1	0.2	<0.1	0.2	<0.1	<0.1	0.2	<0.1	0.2	1	0.6	0.1	0.2	0.2	0.2
BENZENE UG/L	34030 GMS	<1.0	<1.0	<1.0	<1.0	<1.0	<1.0	<1.0	<1.0	<1.0	<10	2.0	<1.0	<1.0	<1.0
BROMODICHLOROMETHANE UG/L	32101 GMS	<2.2	<2.2	<2.2	<2.2	<2.2	<2.2	<2.2	<2.2	<2.2	<22	<220	<2.2	<2.2	<2.2
BROMOFORM UG/L	32104 GMS	<4.7	<4.7	<4.7	<4.7	<4.7	<4.7	<4.7	<4.7	<4.7	<47	<470	<4.7	<4.7	<4.7
BROMOMETHANE UG/L	34413 GMS	<5.8	<5.8	<5.8	<5.8	<5.8	<5.8	<5.8	<5.8	<5.8	<58	<580	<5.8	<5.8	<5.8
CARBON TETRACHLORIDE UG/L	32102 GMS	<2.8	<2.8	<2.8	<2.8	<2.8	<2.8	<2.8	<2.8	<2.8	<28	<280	<2.8	<2.8	<2.8
CHLOROBENZENE UG/L	34301 GMS	<6.0	<6.0	<6.0	<6.0	<6.0	<6.0	<6.0	<6.0	<6.0	<60	<600	<6.0	<6.0	<6.0
CHLOROETHANE UG/L	34311 GMS	<8.2	<8.2	<8.2	<8.2	<8.2	<8.2	<8.2	<8.2	<8.2	<82	<820	<8.2	<8.2	<8.2
2-CHLOROETHYLVINYL ETHER UG/L	34576 GMS	<15	<15	<15	<15	<26	<15	<15	<15	<15	<150	<1500	<15	<15	<15
CHLOROFORM UG/L	32106 GMS	<1.6	<1.6	<1.6	<1.6	<1.6	<1.6	<1.6	<1.6	<1.6	<16	<160	<1.6	<1.6	<1.6
CHLOROMETHANE UG/L	34418 GMS	<4.3	<4.3	<4.3	<4.3	<4.3	<4.3	<4.3	<4.3	<4.3	<43	<430	<4.3	<4.3	<4.3
DIBROMOCHLOROMETHANE UG/L	32105 GMS	<3.1	<3.1	<3.1	<3.1	<3.1	<3.1	<3.1	<3.1	<3.1	<31	<310	<3.1	<3.1	<3.1
1,1-DICHLOROETHANE UG/L	34496 GMS	<4.7	<4.7	<4.7	<4.7	<4.7	<4.7	<4.7	<4.7	<4.7	<47	12	<4.7	<4.7	<4.7
1,2-DICHLOROETHANE UG/L	34531 GMS	<2.8	<2.8	<2.8	<2.8	<2.8	<2.8	<2.8	<2.8	<2.8	<28	<280	<2.8	<2.8	<2.8
1,1-DICHLOROETHYLENE UG/L	34501 GMS	<2.8	<2.8	<2.8	<2.8	<2.8	<2.8	<2.8	<2.8	<2.8	<28	<280	<2.8	<2.8	<2.8
TRANS-1,2-DICHLORO ETHENE UG/L	34546 GMS	<1.6	<1.6	<1.6	<1.6	<1.6	2.5	<1.6	<1.6	<1.6	830	6400	<1.6	<1.6	<1.6
1,2-DICHLOROPROPANE UG/L	34541 GMS	<6.0	<6.0	<6.0	<6.0	<6.0	<6.0	<6.0	<6.0	<6.0	<60	<600	<6.0	<6.0	<6.0
CIS-1,3-DICHLORO PROPENE UG/L	34704 GMS	<5.0	<5.0	<5.0	<5.0	<5.0	<5.0	<5.0	<5.0	<5.0	<50	<500	<5.0	<5.0	<5.0
TRANS-1,3-DICHLORO PROPENE UG/L	34699 GMS	<6.4	<6.4	<6.4	<6.4	<6.4	<6.4	<6.4	<6.4	<6.4	<64	<640	<6.4	<6.4	<6.4

PROJECT NUMBER 86447 0400 PROJECT NAME NAVY - LEJEUNE
FIELD GROUP LJHP-1 LAB COORDINATOR J.D. SHAMIS

SAMPLE ID/#

PARAMETERS UNITS	STORET # METHOD	HPGW14 LJHP-1 16	HPGW15 LJHP-1 17	HPGW16 LJHP-1 18	HPGW17 LJHP-1 19	HPGW18 LJHP-1 20	HPGW19 LJHP-1 21	HPGW20 LJHP-1 22	HPGW21 LJHP-1 23	HPGW22 LJHP-1 24	HPGW23 LJHP-1 25	HPGW24 LJHP-1 26	HPGW25 LJHP-1 27	HPGW26 LJHP-1 28	HPGW29 LJHP-1 31
DATE		01/14/87	01/15/87	01/15/87	01/15/87	01/15/87	01/16/87	01/16/87	01/16/87	01/19/87	01/19/87	01/19/87	01/19/87	01/19/87	01/20/87
TIME		17:37	10:46	12:27	13:56	17:25	10:12	11:50	14:35	10:20	11:30	14:00	14:50	16:30	11:20
ETHYLBENZENE UG/L	34371 GMS	<7.2	<7.2	<7.2	<7.2	<7.2	<7.2	<7.2	<7.2	<7.2	<72	<720	<7.2	<7.2	<7.2
METHYLENE CHLORIDE UG/L	34423 GMS	<2.8	<2.8	<2.8	<2.8	<2.8	<2.8	<2.8	<2.8	<2.8	<28	<280	<2.8	<2.8	<2.8
1,1,2,2-TETRACHLORO ETHANE UG/L	34516 GMS	<4.1	<4.1	<4.1	<4.1	<4.1	<4.1	<4.1	<4.1	<4.1	<41	<410	<4.1	<4.1	<4.1
TETRACHLOROETHENE UG/L	34475 GMS	<3.0	<3.0	<3.0	<3.0	<3.0	<3.0	<3.0	<3.0	<3.0	<30	<300	<3.0	<3.0	<3.0
TOLUENE UG/L	34010 GMS	<6.0	<6.0	<6.0	<6.0	<6.0	<6.0	<6.0	<6.0	<6.0	<60	<600	<6.0	<6.0	<6.0
1,1,1-TRICHL'ETHANE UG/L	34506 GMS	<3.8	<3.8	<3.8	<3.8	<3.8	<3.8	<3.8	<3.8	<3.8	<38	<380	<3.8	<3.8	<3.8
1,1,2-TRICHL'ETHANE UG/L	34511 GMS	<5.0	<5.0	<5.0	<5.0	<5.0	<5.0	<5.0	<5.0	<5.0	<50	<500	<5.0	<5.0	<5.0
TRICHLOROETHENE UG/L	39180 GMS	<3.0	<3.0	<3.0	<3.0	<1.0	6.0	<3.0	<3.0	<3.0	830	57	<3.0	<3.0	<3.0
TRICHLOROFLUORO-METHANE UG/L	34488 GMS	<3.2	<3.2	<3.2	<3.2	<3.2	<3.2	<3.2	<3.2	<3.2	<32	<320	<3.2	<3.2	<3.2
VINYL CHLORIDE UG/L	39175 GMS	<1.0	<1.0	<1.0	<1.0	<1.0	<1.0	<1.0	<1.0	<1.0	<10	190	<1.0	<1.0	<1.0
ACROLEIN UG/L	34210 GMS	<100	<100	<100	<100	<100	<100	<100	<100	<100	<1000	<10000	<100	<100	<100
ACRYLONITRILE UG/L	34215 GMS	<100	<100	<100	<100	<100	<100	<100	<100	<100	<1000	<10000	<100	<100	<100
DICHLORODIFLUORO-METHANE UG/L	34668 GMS	<10	<10	<10	<10	<10	<10	<10	<10	<10	<100	<1000	<10	<10	<10
M-XYLENE UG/L	98553 GMS	<12	<12	<12	<12	<12	<12	<12	<12	<12	<120	<1200	<12	<12	<12
O-AND/OR-P XYLENE UG/L	98554 GMS	<12	<12	<12	<12	<12	<12	<12	<12	<12	<120	<1200	<12	<12	<12
METHYL ETHYL KETONE UG/L	81595 GMS	<48	<48	<48	<48	<48	<48	<48	<48	<48	<480	<4800	<48	<48	<48
METHYL ISOBUT'KETONE UG/L	81596 GMS	<12	<12	<12	<12	<12	<12	<12	<12	<12	<120	<1200	<12	<12	<12

ANALYTICAL DATA

SHALLOW GROUNDWATER MONITORING WELLS
SET 2 DATA

PROJECT NUMBER 86447 0404 PROJECT NAME NAVY - LEJEUNE HP2
FIELD GROUP LJHP-2 LAB COORDINATOR J.D. SHAMIS

SAMPLE ID/#

PARAMETERS UNITS	STORET # METHOD	22GW1 LJHP-2 1	22GW2 LJHP-2 2	HPGW1 LJHP-2 3	HPGW2 LJHP-2 4	HPGW3 LJHP-2 5	HPGW4 LJHP-2 6	HPGW5 LJHP-2 7	HPGW6 LJHP-2 8	HPGW7 LJHP-2 9	HPGW8 LJHP-2 10	HPGW9 LJHP-2 11	HPGW10 LJHP-2 12	HPGW11 LJHP-2 13	HPGW12 LJHP-2 14	HPGW13 LJHP-2 15
DATE		03/08/87	03/08/87	03/08/87	03/08/87	03/08/87	03/08/87	03/08/87	03/08/87	03/09/87	03/09/87	03/09/87	03/09/87	03/09/87	03/09/87	03/09/87
TIME		11:03	11:30	12:45	16:18	14:20	15:12	16:55	17:10	10:05	11:10	10:30	11:20	12:19	12:33	13:45
LEAD,TOTAL UG/L	1051 ICAP	29.0	<27.0	<27.0	<27.0	<27.0	<27.0	<27.0	<27.0	29.0	<27.0	92.0	<27.0	<27.0	<27.0	<27.0
OIL&GR,IR MG/L	560 1	11	<0.1	<0.1	<0.1	0.2	0.3	<0.1	<0.1	0.2	<0.1	11	<0.1	0.6	<0.1	<0.1
BENZENE UG/L	34030 GMS	10000	<1.0	3.9	<1.0	<1.0	3.2	<1.0	<1.0	<1.0	<1.0	<250	<1.0	<1.0	<1.0	<1.0
BROMODICHLOROMETHANE UG/L	32101 GMS	<2200	<2.2	<2.2	<2.2	<2.2	<2.2	<2.2	<2.2	<2.2	<2.2	<550	<2.2	<2.2	<2.2	<2.2
BROMOFORM UG/L	32104 GMS	<4700	<4.7	<4.7	<4.7	<4.7	<4.7	<4.7	<4.7	<4.7	<4.7	<1200	<4.7	<4.7	<4.7	<4.7
BROMOMETHANE UG/L	34413 GMS	<5800	<5.8	<5.8	<5.8	<5.8	<5.8	<5.8	<5.8	<5.8	<5.8	<1500	<5.8	<5.8	<5.8	<5.8
CARBON TETRACHLORIDE UG/L	32102 GMS	<2800	<2.8	<2.8	<2.8	<2.8	<2.8	<2.8	<2.8	<2.8	<2.8	<700	<2.8	<2.8	<2.8	<2.8
CHLOROBENZENE UG/L	34301 GMS	<6000	<6.0	<6.0	<6.0	<6.0	<6.0	<6.0	<6.0	<6.0	<6.0	<1500	<6.0	<6.0	<6.0	<6.0
CHLOROETHANE UG/L	34311 GMS	<8200	<8.2	<8.2	<8.2	<8.2	<8.2	<8.2	<8.2	<8.2	<8.2	<2100	<8.2	<8.2	<8.2	<8.2
2-CHLOROETHYLVINYL ETHER UG/L	34576 GMS	<15000	<15	<15	<15	<15	<15	<15	<15	<15	<15	<3800	<15	<15	<15	<15
CHLOROFORM UG/L	32106 GMS	<1600	<1.6	<1.6	<1.6	<1.6	<1.6	<1.6	<1.6	<1.6	<1.6	<400	<1.6	2.2	<1.6	<1.6
CHLOROMETHANE UG/L	34418 GMS	<4300	<4.3	<4.3	<4.3	<4.3	<4.3	<4.3	<4.3	<4.3	<4.3	<1100	<4.3	<4.3	<4.3	<4.3
DIBROMOCHLOROMETHANE UG/L	32105 GMS	<3100	<3.1	<3.1	<3.1	<3.1	<3.1	<3.1	<3.1	<3.1	<3.1	<780	<3.1	<3.1	<3.1	<3.1
1,1-DICHLOROETHANE UG/L	34496 GMS	<4700	<4.7	<4.7	<4.7	<4.7	<4.7	<4.7	<4.7	<4.7	<4.7	<1200	<4.7	<4.7	<4.7	<4.7
1,2-DICHLOROETHANE UG/L	34531 GMS	<2800	<2.8	<2.8	<2.8	<2.8	<2.8	<2.8	<2.8	<2.8	<2.8	<700	<2.8	<2.8	<2.8	<2.8
1,1-DICHLOROETHYLENE UG/L	34501 GMS	<2800	<2.8	<2.8	<2.8	<2.8	<2.8	<2.8	<2.8	<2.8	<2.8	<700	<2.8	<2.8	<2.8	<2.8
TRANS-1,2-DICHLORO ETHENE UG/L	34546 GMS	<1600	<1.6	<1.6	<1.6	<1.6	2.2	<1.6	<1.6	<1.6	<1.6	<400	<1.6	7.2	<1.6	<1.6
1,2-DICHLOROPROPANE UG/L	34541 GMS	<6000	<6.0	<6.0	<6.0	<6.0	<6.0	<6.0	<6.0	<6.0	<6.0	<1500	<6.0	<6.0	<6.0	<6.0
CIS-1,3-DICHLORO PROPENE UG/L	34704 GMS	<5000	<5.0	<5.0	<5.0	<5.0	<5.0	<5.0	<5.0	<5.0	<5.0	<1300	<5.0	<5.0	<5.0	<5.0
TRANS-1,3-DICHLORO PROPENE UG/L	34699 GMS	<6400	<6.4	<6.4	<6.4	<6.4	<6.4	<6.4	<6.4	<6.4	<6.4	<1600	<6.4	<6.4	<6.4	<6.4

PROJECT NUMBER 86447 0404 PROJECT NAME NAVY - LEJEUNE HP2
FIELD GROUP LJHP-2 LAB COORDINATOR J.D. SHAMIS

SAMPLE ID/#

PARAMETERS UNITS	STORET # METHOD	22GW1 LJHP-2 1	22GW2 LJHP-2 2	HPGW1 LJHP-2 3	HPGW2 LJHP-2 4	HPGW3 LJHP-2 5	HPGW4 LJHP-2 6	HPGW5 LJHP-2 7	HPGW6 LJHP-2 8	HPGW7 LJHP-2 9	HPGW8 LJHP-2 10	HPGW9 LJHP-2 11	HPGW10 LJHP-2 12	HPGW11 LJHP-2 13	HPGW12 LJHP-2 14	HPGW13 LJHP-2 15
DATE		03/08/87	03/08/87	03/08/87	03/08/87	03/08/87	03/08/87	03/08/87	03/08/87	03/09/87	03/09/87	03/09/87	03/09/87	03/09/87	03/09/87	03/09/87
TIME		11:03	11:30	12:45	16:18	14:20	15:12	16:55	17:10	10:05	11:10	10:30	11:20	12:19	12:33	13:45
ETHYLBENZENE UG/L	34371 GMS	<7200	<7.2	<7.2	<7.2	9.0	<7.2	<7.2	<7.2	<7.2	<7.2	<1800	<7.2	<7.2	<7.2	<7.2
METHYLENE CHLORIDE UG/L	34423 GMS	<2800	<2.8	<2.8	<2.8	<2.8	<2.8	<2.8	<2.8	<2.8	<2.8	<700	<2.8	<2.8	<2.8	<2.8
1,1,2,2-TETRACHLORO ETHANE UG/L	34516 GMS	<4100	<4.1	<4.1	<4.1	<4.1	<4.1	<4.1	<4.1	<4.1	<4.1	<1000	<4.1	<4.1	<4.1	<4.1
TETRACHLOROETHENE UG/L	34475 GMS	<2000	<3.0	<3.0	<3.0	<3.0	<3.0	<3.0	<3.0	<3.0	<3.0	<750	<3.0	<3.0	3.6	<3.0
TOLUENE UG/L	34010 GMS	18000	<6.0	12	<6.0	<6.0	8.2	<6.0	<6.0	<6.0	<6.0	<1500	<6.0	<6.0	<6.0	<6.0
1,1,1-TRICHL'ETHANE UG/L	34506 GMS	<3800	<3.8	<3.8	<3.8	13	<3.8	<3.8	<3.8	<3.8	<3.8	<950	<3.8	<3.8	<3.8	<3.8
1,1,2-TRICHL'ETHANE UG/L	34511 GMS	<5000	<5.0	<5.0	<5.0	<5.0	<5.0	<5.0	<5.0	<5.0	<5.0	<1300	<5.0	<5.0	<5.0	<5.0
TRICHLOROETHENE UG/L	39180 GMS	<1000	<3.0	<3.0	<3.0	<3.0	<3.0	<3.0	<3.0	<3.0	<3.0	6100	8.6	34	<3.0	<3.0
TRICHLOROFLUORO-METHANE UG/L	34488 GMS	<3200	<3.2	<3.2	<3.2	<3.2	<3.2	<3.2	<3.2	<3.2	96	<800	<3.2	<3.2	<3.2	<3.2
VINYL CHLORIDE UG/L	39175 GMS	<1000	<1.0	<1.0	<1.0	<1.0	<1.0	<1.0	<1.0	<1.0	<1.0	<250	<1.0	<1.0	<1.0	<1.0
ACROLEIN UG/L	34210 GMS	<100000	<100	<100	<100	<100	<100	<100	<100	<100	<100	<25000	<100	<100	<100	<100
ACRYLONITRILE UG/L	34215 GMS	<100000	<100	<100	<100	<100	<100	<100	<100	<100	<100	<25000	<100	<100	<100	<100
DICHLORODIFLUORO-METHANE UG/L	34668 GMS	<10000	<10	<10	<10	<10	<10	<10	<10	<10	<10	<2500	<10	<10	<10	<10
M-XYLENE UG/L	98553 GMS	<12000	<12	<12	<12	<12	<12	<12	<12	<12	<12	<3000	<12	<12	<12	<12
O-AND/OR-P XYLENE UG/L	98554 GMS	<12000	<12	<12	<12	<12	<12	<12	<12	<12	<12	<3000	<12	<12	<12	<12
METHYL ETHYL KETONE UG/L	81595 GMS	<48000	<48	<48	<48	<48	<48	<48	<48	<48	<48	<12000	<48	<48	<48	<48
METHYL ISOBUT'KETONE UG/L	81596 GMS	<12000	<12	<12	<12	<12	<12	<12	<12	<12	<12	<3000	<12	<12	<12	<12

PROJECT NUMBER 86447 0404 PROJECT NAME NAVY - LEJEUNE HP2
FIELD GROUP LJHP-2 LAB COORDINATOR J.D. SHAMIS

SAMPLE ID/#

PARAMETERS UNITS	STORET # METHOD	HPGW14 LJHP-2 16	HPGW15 LJHP-2 17	HPGW16 LJHP-2 18	HPGW17 LJHP-2 19	HPGW18 LJHP-2 20	HPGW19 LJHP-2 21	HPGW20 LJHP-2 22	HPGW21 LJHP-2 23	HPGW22 LJHP-2 24	HPGW23 LJHP-2 25	HPGW24 LJHP-2 26	HPGW25 LJHP-2 27	HPGW26 LJHP-2 28	HPGW29 LJHP-2 29
DATE		03/09/87	03/09/87	03/10/87	03/10/87	03/10/87	03/10/87	03/10/87	03/10/87	03/11/87	03/11/87	03/11/87	03/11/87	03/12/87	03/12/87
TIME		13:55	15:10	12:07	12:26	11:40	13:35	13:50	16:26	10:42	10:25	12:01	12:15	13:10	14:00
LEAD,TOTAL UG/L	1051 ICAP	<27.0	<27.0	41.0	<27.0	<27.0	<27.0	33.0	<27.0	<27.0	<27.0	<27.0	<27.0	<27.0	52.0
OIL&GR,IR MG/L	560 I	<0.1	<0.1	3	3	2	2	3	2	2	3	2	0.3	2	<0.1
BENZENE UG/L	34030 GMS	<1.0	<1.0	<1.0	<1.0	<1.0	<1.0	<1.0	<1.0	<1.0	<100	<100	<1.0	<1.0	<1.0
BROMODICHLOROMETHANE UG/L	32101 GMS	<2.2	<2.2	<2.2	<2.2	<2.2	<2.2	<2.2	<2.2	<2.2	<220	<220	<2.2	<2.2	<2.2
BROMOFORM UG/L	32104 GMS	<4.7	<4.7	<4.7	<4.7	<4.7	<4.7	<4.7	<4.7	<4.7	<470	<470	<4.7	<4.7	<4.7
BROMOMETHANE UG/L	34413 GMS	<5.8	<5.8	<5.8	<5.8	<5.8	<5.8	<5.8	<5.8	<5.8	<580	<580	<5.8	<5.8	<5.8
CARBON TETRACHLORIDE UG/L	32102 GMS	<2.8	<2.8	<2.8	<2.8	<2.8	<2.8	<2.8	<2.8	<2.8	<280	<280	<2.8	<2.8	<2.8
CHLOROBENZENE UG/L	34301 GMS	<6.0	<6.0	<6.0	<6.0	<6.0	<6.0	<6.0	<6.0	<6.0	<600	<600	<6.0	<6.0	<6.0
CHLOROETHANE UG/L	34311 GMS	<8.2	<8.2	<8.2	<8.2	<8.2	<8.2	<8.2	<8.2	<8.2	<820	<820	<8.2	<8.2	<8.2
2-CHLOROETHYLVINYL ETHER UG/L	34576 GMS	<15	<15	<15	<15	<15	<15	<26	<26	<26	<1500	<1500	<26	<26	<15
CHLOROFORM UG/L	32106 GMS	<1.6	<1.6	<1.6	<1.6	<1.6	<1.6	<1.6	<1.6	<1.6	<160	<160	<1.6	<1.6	<1.6
CHLOROMETHANE UG/L	34418 GMS	<4.3	<4.3	<4.3	<4.3	<4.3	<4.3	<4.3	<4.3	<4.3	<430	<430	<4.3	<4.3	<4.3
DIBROMOCHLOROMETHANE UG/L	32105 GMS	<3.1	<3.1	<3.1	<3.1	<3.1	<3.1	<3.1	<3.1	<3.1	<310	<310	<3.1	<3.1	<3.1
1,1-DICHLOROETHANE UG/L	34496 GMS	<4.7	<4.7	<4.7	<4.7	<4.7	<4.7	<4.7	<4.7	<4.7	<470	<470	<4.7	<4.7	<4.7
1,2-DICHLOROETHANE UG/L	34531 GMS	<2.8	<2.8	<2.8	<2.8	<2.8	<2.8	<2.8	<2.8	<2.8	<280	<280	<2.8	<2.8	<2.8
1,1-DICHLOROETHYLENE UG/L	34501 GMS	<2.8	<2.8	<2.8	<2.8	<2.8	<2.8	<2.8	<2.8	<2.8	<280	<280	<2.8	<2.8	<2.8
TRANS-1,2-DICHLORO ETHENE UG/L	34546 GMS	<1.6	<1.6	<1.6	<1.6	<1.6	<1.6	<1.6	<1.6	<1.6	6100	4300	<1.6	<1.6	<1.6
1,2-DICHLOROPROPANE UG/L	34541 GMS	<6.0	<6.0	<6.0	<6.0	<6.0	<6.0	<6.0	<6.0	<6.0	<600	<600	<6.0	<6.0	<6.0
CIS-1,3-DICHLORO PROPENE UG/L	34704 GMS	<5.0	<5.0	<5.0	<5.0	<5.0	<5.0	<5.0	<5.0	<5.0	<500	<500	<5.0	<5.0	<5.0
TRANS-1,3-DICHLORO PROPENE UG/L	34699 GMS	<6.4	<6.4	<6.4	<6.4	<6.4	<6.4	<6.4	<6.4	<6.4	<640	<640	<6.4	<6.4	<6.4

PROJECT NUMBER 86447 0404 PROJECT NAME NAVY - LEJEUNE HP2
FIELD GROUP LJHP-2 LAB COORDINATOR J.D. SHAMIS

SAMPLE ID/#

PARAMETERS UNITS	STORET # METHOD	HPGW14 LJHP-2 16	HPGW15 LJHP-2 17	HPGW16 LJHP-2 18	HPGW17 LJHP-2 19	HPGW18 LJHP-2 20	HPGW19 LJHP-2 21	HPGW20 LJHP-2 22	HPGW21 LJHP-2 23	HPGW22 LJHP-2 24	HPGW23 LJHP-2 25	HPGW24 LJHP-2 26	HPGW25 LJHP-2 27	HPGW26 LJHP-2 28	HPGW29 LJHP-2 29
DATE		03/09/87	03/09/87	03/10/87	03/10/87	03/10/87	03/10/87	03/10/87	03/10/87	03/11/87	03/11/87	03/11/87	03/11/87	03/12/87	03/12/87
TIME		13:55	15:10	12:07	12:26	11:40	13:35	13:50	16:26	10:42	10:25	12:01	12:15	13:10	14:00
ETHYLBENZENE UG/L	34371 GMS	<7.2	<7.2	<7.2	<7.2	<7.2	<7.2	<7.2	<7.2	<7.2	<720	<720	<7.2	<7.2	<7.2
METHYLENE CHLORIDE UG/L	34423 GMS	<2.8	<2.8	<2.8	<2.8	<2.8	<2.8	3.4	<2.8	<2.8	300	<280	2.9	6.5	<2.8
1,1,2,2-TETRACHLORO ETHANE UG/L	34516 GMS	<4.1	<4.1	<4.1	<4.1	<4.1	<4.1	<4.1	<4.1	<4.1	<410	<410	<4.1	<4.1	<4.1
TETRACHLOROETHENE UG/L	34475 GMS	<3.0	<3.0	<3.0	<3.0	<3.0	<3.0	<3.0	<3.0	<3.0	<200	<200	<3.0	<3.0	<3.0
TOLUENE UG/L	34010 GMS	<6.0	<6.0	<6.0	<6.0	<6.0	<6.0	<6.0	<6.0	<6.0	<600	<600	<6.0	<6.0	<6.0
1,1,1-TRICHL'ETHANE UG/L	34506 GMS	<3.8	<3.8	<3.8	<3.8	<3.8	<3.8	<3.8	<3.8	<3.8	<380	<380	<3.8	<3.8	<3.8
1,1,2-TRICHL'ETHANE UG/L	34511 GMS	<5.0	<5.0	<5.0	<5.0	<5.0	<5.0	<5.0	<5.0	<5.0	<500	<500	<5.0	<5.0	<5.0
TRICHLOROETHENE UG/L	39180 GMS	<3.0	<3.0	<3.0	<3.0	<3.0	<3.0	<1.0	<1.0	<1.0	13000	<100	<1.0	<1.0	<3.0
TRICHLOROFLUORO-METHANE UG/L	34488 GMS	<3.2	<3.2	<3.2	<3.2	<3.2	<3.2	<3.2	<3.2	<3.2	<320	<320	<3.2	<3.2	<3.2
VINYL CHLORIDE UG/L	39175 GMS	<1.0	<1.0	<1.0	<1.0	<1.0	<1.0	<1.0	<1.0	<1.0	<100	<100	<1.0	<1.0	<1.0
ACROLEIN UG/L	34210 GMS	<100	<100	<100	<100	<100	<100	<100	<100	<100	<10000	<10000	<100	<100	<100
ACRYLONITRILE UG/L	34215 GMS	<100	<100	<100	<100	<100	<100	<100	<100	<100	<10000	<10000	<100	<100	<100
DICHLORODIFLUORO-METHANE UG/L	34668 GMS	<10	<10	<10	<10	<10	<10	<10	<10	<10	<1000	<1000	<10	<10	<10
M-XYLENE UG/L	98553 GMS	<12	<12	<12	<12	<12	<12	<12	<12	<12	<1200	<1200	<12	<12	<12
O-AND/OR-P XYLENE UG/L	98554 GMS	<12	<12	<12	<12	<12	<12	<12	<12	<12	<1200	<1200	<12	<12	<12
METHYL ETHYL KETONE UG/L	81595 GMS	<48	<48	<48	<48	<48	<48	<48	<48	<48	<4800	<4800	<48	<48	<48
METHYL ISOBUT'KETONE UG/L	81596 GMS	<12	<12	<12	<12	<12	<12	<12	<12	<12	<1200	<1200	<12	<12	<12

ANALYTICAL DATA

SHALLOW GROUNDWATER MONITORING WELLS
SET 3 DATA

PROJECT NUMBER 86447 0405 PROJECT NAME NAVY - LEJEUNE HP3
FIELD GROUP LJHP-3 PROJECT MANAGER J.D. SHAMIS
LAB COORDINATOR JEFF SHAMIS

SAMPLE ID/#

PARAMETERS	STORET #	22GW1	22GW2	HPGW1	HPGW2	HPGW3	HPGW4	HPGW5	HPGW6	HPGW7	HPGW8	HPGW9	HPGW10	HPGW11	HPGW12	HPGW13
		LJHP-3	LJHP-3	LJHP-3	LJHP-3	LJHP-3	LJHP-3	LJHP-3	LJHP-3	LJHP-3	LJHP-3	LJHP-3	LJHP-3	LJHP-3	LJHP-3	LJHP-3
UNITS	METHOD	1	2	3	4	5	6	7	8	9	10	11	12	13	14	15
DATE		05/27/87	05/27/87	05/27/87	05/27/87	05/27/87	05/27/87	05/27/87	05/27/87	05/27/87	05/27/87	05/28/87	05/28/87	05/28/87	05/28/87	05/28/87
TIME		11:20	10:58	12:45	14:30	11:59	13:30	14:55	15:47	16:05	16:45	08:07	09:22	09:59	10:25	11:29
LEAD,TOTAL	1051	78.0	<49.2	<49.2	<49.2	<49.2	<49.2	<49.2	<49.2	<49.2	<49.2	70.0	<49.2	<49.2	<49.2	<49.2
UG/L	ICAP															
OIL&GR,IR	560	9	<0.2	<0.2	<0.2	<0.2	<0.2	<0.2	<0.2	<0.2	<0.2	6	<0.2	<0.2	<0.2	<0.2
MG/L	1															
BENZENE	34030	13000	<1.0	<1.0	<1.0	<1.0	1.6	<1.0	<1.0	<1.0	<1.0	<100	<1.0	<1.0	<1.0	<1.0
UG/L	GMS															
BROMODICHLOROMETHANE	32101	<2200	<2.2	<2.2	<2.2	<2.2	<2.2	<2.2	<2.2	<2.2	<2.2	<220	<2.2	<2.2	<2.2	<2.2
UG/L	GMS															
BROMOFORM	32104	<4700	<4.7	<4.7	<4.7	<4.7	<4.7	<4.7	<4.7	<4.7	<4.7	<470	<4.7	<4.7	<4.7	<4.7
UG/L	GMS															
BROMOMETHANE	34413	<5800	<5.8	<5.8	<5.8	<5.8	<5.8	<5.8	<5.8	<5.8	<5.8	<580	<5.8	<5.8	<5.8	<5.8
UG/L	GMS															
CARBON TETRACHLORIDE	32102	<2800	<2.8	<2.8	<2.8	<2.8	<2.8	<2.8	<2.8	<2.8	<2.8	<280	<2.8	<2.8	<2.8	<2.8
UG/L	GMS															
CHLOROBENZENE	34301	<6000	<6.0	<6.0	<6.0	<6.0	<6.0	<6.0	<6.0	<6.0	<6.0	<600	<6.0	<6.0	<6.0	<6.0
UG/L	GMS															
CHLOROETHANE	34311	<8200	<8.2	<8.2	<8.2	<8.2	<8.2	<8.2	<8.2	<8.2	<8.2	<820	<8.2	<8.2	<8.2	<8.2
UG/L	GMS															
2-CHLOROETHYLVINYL	34576	<15000	<26	<26	<26	<26	<26	<26	<26	<26	<26	<1500	<26	<26	<26	<26
ETHER UG/L	GMS															
CHLOROFORM	32106	<1600	<1.6	<1.6	<1.6	<1.6	<1.6	<1.6	<1.6	<1.6	<1.6	<160	<1.6	2.6	<1.6	<1.6
UG/L	GMS															
CHLOROMETHANE	34418	<4300	<4.3	<4.3	<4.3	<4.3	<4.3	<4.3	<4.3	<4.3	<4.3	<430	<4.3	<4.3	<4.3	<4.3
UG/L	GMS															
DIBROMOCHLOROMETHANE	32105	<3100	<3.1	<3.1	<3.1	<3.1	<3.1	<3.1	<3.1	<3.1	<3.1	<310	<3.1	<3.1	<3.1	<3.1
UG/L	GMS															
1,1-DICHLOROETHANE	34496	<4700	<4.7	<4.7	<4.7	<4.7	<4.7	<4.7	<4.7	<4.7	<4.7	<470	<4.7	<4.7	<4.7	<4.7
UG/L	GMS															
1,2-DICHLOROETHANE	34531	<2800	<2.8	<2.8	<2.8	<2.8	<2.8	<2.8	<2.8	<2.8	<2.8	<280	<2.8	<2.8	<2.8	<2.8
UG/L	GMS															
1,1-DICHLOROETHYLENE	34501	<2800	<2.8	<2.8	<2.8	<2.8	<2.8	<2.8	<2.8	<2.8	<2.8	<280	<2.8	<2.8	<2.8	<2.8
UG/L	GMS															
TRANS-1,2-DICHLORO	34546	<1600	<1.6	<1.6	<1.6	<1.6	4.4	<1.6	<1.6	<1.6	<1.6	2700	<1.6	6.0	<1.6	<1.6
ETHENE UG/L	GMS															
1,2-DICHLOROPROPANE	34541	<6000	<6.0	<6.0	<6.0	<6.0	<6.0	<6.0	<6.0	<6.0	<6.0	<600	<6.0	<6.0	<6.0	<6.0
UG/L	GMS															
CIS-1,3-DICHLORO	34704	<5000	<5.0	<5.0	<5.0	<5.0	<5.0	<5.0	<5.0	<5.0	<5.0	<500	<5.0	<5.0	<5.0	<5.0
PROPENE UG/L	GMS															
TRANS-1,3-DICHLORO	34699	<6400	<6.4	<6.4	<6.4	<6.4	<6.4	<6.4	<6.4	<6.4	<6.4	<640	<6.4	<6.4	<6.4	<6.4
PROPENE UG/L	GMS															

PROJECT NUMBER 86447 0405 PROJECT NAME NAVY - LEJEUNE HP3
FIELD GROUP LJHP-3 PROJECT MANAGER J.D. SHAMIS
LAB COORDINATOR JEFF SHAMIS

PARAMETERS	STORET #	22GW1	22GW2	HPGW1	HPGW2	HPGW3	HPGW4	HPGW5	HPGW6	HPGW7	HPGW8	HPGW9	HPGW10	HPGW11	HPGW12	HPGW13
		SAMPLE ID/#														
		LJHP-3	LJHP-3	LJHP-3	LJHP-3	LJHP-3	LJHP-3	LJHP-3	LJHP-3	LJHP-3	LJHP-3	LJHP-3	LJHP-3	LJHP-3	LJHP-3	LJHP-3
UNITS	METHOD	1	2	3	4	5	6	7	8	9	10	11	12	13	14	15
DATE		05/27/87	05/27/87	05/27/87	05/27/87	05/27/87	05/27/87	05/27/87	05/27/87	05/27/87	05/27/87	05/28/87	05/28/87	05/28/87	05/28/87	05/28/87
TIME		11:20	10:58	12:45	14:30	11:59	13:30	14:55	15:47	16:05	16:45	08:07	09:22	09:59	10:25	11:29
ETHYLBENZENE	34371	<7200	<7.2	<7.2	<7.2	<7.2	<7.2	<7.2	<7.2	<7.2	<7.2	<720	<7.2	<7.2	<7.2	<7.2
UG/L	GMS															
METHYLENE CHLORIDE	34423	<50000	<50	<50	<50	<50	<50	<50	<50	<50	<50	<280	<50	<50	<50	<50
UG/L	GMS															
1,1,2,2-TETRACHLORO ETHANE	34516	<4100	<4.1	<4.1	<4.1	<4.1	<4.1	<4.1	<4.1	<4.1	<4.1	<410	<4.1	<4.1	<4.1	<4.1
UG/L	GMS															
TETRACHLOROETHENE	34475	<2000	<3.0	<3.0	<3.0	<3.0	<3.0	<3.0	<3.0	<3.0	<3.0	<200	<3.0	<3.0	<3.0	<3.0
UG/L	GMS															
TOLUENE	34010	24000	<6.0	<6.0	<6.0	<6.0	<6.0	<6.0	<6.0	<6.0	<6.0	<600	<6.0	<6.0	<6.0	<6.0
UG/L	GMS															
1,1,1-TRICHL'ETHANE	34506	<3800	<3.8	<3.8	<3.8	<3.8	<3.8	<3.8	<3.8	<3.8	<3.8	<380	<3.8	<3.8	<3.8	<3.8
UG/L	GMS															
1,1,2-TRICHL'ETHANE	34511	<5000	<5.0	<5.0	<5.0	<5.0	<5.0	<5.0	<5.0	<5.0	<5.0	<500	<5.0	<5.0	<5.0	<5.0
UG/L	GMS															
TRICHLOROETHENE	39180	<1000	<1.0	<1.0	<1.0	<1.0	7.7	<1.0	<1.0	<1.0	<1.0	<100	<1.0	24	<1.0	<1.0
UG/L	GMS															
TRICHLOROFLUORO-METHANE	34488	<3200	<3.2	<3.2	<3.2	<3.2	<3.2	<3.2	<3.2	<3.2	<3.2	<320	<3.2	<3.2	<3.2	<3.2
UG/L	GMS															
VINYL CHLORIDE	39175	<1000	<1.0	<1.0	<1.0	<1.0	<1.0	<1.0	<1.0	<1.0	<1.0	<100	<1.0	<1.0	<1.0	<1.0
UG/L	GMS															
ACROLEIN	34210	<100000	<100	<100	<100	<100	<100	<100	<100	<100	<100	<10000	<100	<100	<100	<100
UG/L	GMS															
ACRYLONITRILE	34215	<100000	<100	<100	<100	<100	<100	<100	<100	<100	<100	<10000	<100	<100	<100	<100
UG/L	GMS															
DICHLORODIFLUORO-METHANE	34668	<10000	<10	<10	<10	<10	<10	<10	<10	<10	<10	<1000	<10	<10	<10	<10
UG/L	GMS															
M-XYLENE	98553	<12000	<12	<12	<12	<12	<12	<12	<12	<12	<12	2000	<12	<12	<12	<12
UG/L	GMS															
O-AND/OR-P XYLENE	98554	<12000	<12	<12	<12	<12	<12	<12	<12	<12	<12	2000	<12	<12	<12	<12
UG/L	GMS															
METHYL ETHYL KETONE	81595	<48000	<48	<48	<48	<48	<48	<48	<48	<48	<48	<4800	<48	<48	<48	<48
UG/L	GMS															
METHYL ISOBUT'KETONE	81596	<12000	<12	<12	<12	<12	<12	<12	<12	<12	<12	<1200	<12	<12	<12	<12
UG/L	GMS															

PROJECT NUMBER 86447 0405 PROJECT NAME NAVY - LEJEUNE HP3
FIELD GROUP LJHP-3 PROJECT MANAGER J.D. SHAMIS
LAB COORDINATOR JEFF SHAMIS

PARAMETERS UNITS	STORET # METHOD	SAMPLE ID/# HPGW14 LJHP-3 16	HPGW15 LJHP-3 17	HPGW16 LJHP-3 18	HPGW17 LJHP-3 19	HPGW18 LJHP-3 20	HPGW19 LJHP-3 21	HPGW20 LJHP-3 22	HPGW21 LJHP-3 23	HPGW22 LJHP-3 24	HPGW23 LJHP-3 25	HPGW24 LJHP-3 26	HPGW25 LJHP-3 27	HPGW26 LJHP-3 28	HPGW29 LJHP-3 29
DATE		05/28/87	05/28/87	05/28/87	05/28/87	05/28/87	05/28/87	05/28/87	05/28/87	05/29/87	05/29/87	05/29/87	05/29/87	05/29/87	05/29/87
TIME		11:45	13:00	13:20	14:14	13:57	15:10	15:50	18:12	10:03	09:35	11:05	11:23	12:45	13:05
LEAD,TOTAL UG/L	1051 ICAP	<49.2	<49.2	<49.2	<49.2	<49.2	<49.2	<49.2	<49.2	<49.2	<49.2	<49.2	<49.2	<49.2	<49.2
OIL&GR,IR MG/L	560 I	<0.3	<0.2	<0.2	<0.2	<0.2	<0.2	<0.2	<0.2	<0.2	<0.2	<0.2	<0.2	<0.2	<0.2
BENZENE UG/L	34030 GMS	<1.0	<1.0	<1.0	<1.0	<1.0	<1.0	<1.0	<1.0	<1.0	<100	<100	<1.0	<1.0	<1.0
BROMODICHLOROMETHANE UG/L	32101 GMS	<2.2	<2.2	<2.2	<2.2	<2.2	<2.2	<2.2	<2.2	<2.2	<220	<220	<2.2	<2.2	<2.2
BROMOFORM UG/L	32104 GMS	<4.7	<4.7	<4.7	<4.7	<4.7	<4.7	<4.7	<4.7	<4.7	<470	<470	<4.7	<4.7	<4.7
BROMOMETHANE UG/L	34413 GMS	<5.8	<5.8	<5.8	<5.8	<5.8	<5.8	<5.8	<5.8	<5.8	<580	<580	<5.8	<5.8	<5.8
CARBON TETRACHLORIDE UG/L	32102 GMS	<2.8	<2.8	<2.8	<2.8	<2.8	<2.8	<2.8	<2.8	<2.8	<280	<280	<2.8	<2.8	<2.8
CHLOROBENZENE UG/L	34301 GMS	<6.0	<6.0	<6.0	<6.0	<6.0	<6.0	<6.0	<6.0	<6.0	<600	<600	<6.0	<6.0	<6.0
CHLOROETHANE UG/L	34311 GMS	<8.2	<8.2	<8.2	<8.2	<8.2	<8.2	<8.2	<8.2	<8.2	<820	<820	<8.2	<8.2	<8.2
2-CHLOROETHYLVINYL ETHER UG/L	34576 GMS	<26	<26	<26	<26	<26	<26	<26	<26	<26	<1500	<1500	<26	<26	<26
CHLOROFORM UG/L	32106 GMS	<1.6	<1.6	<1.6	<1.6	<1.6	<1.6	<1.6	<1.6	<1.6	<160	<160	<1.6	<1.6	<1.6
CHLOROMETHANE UG/L	34418 GMS	<4.3	<4.3	<4.3	<4.3	<4.3	<4.3	<4.3	<4.3	<4.3	<430	<430	<4.3	<4.3	<4.3
DIBROMOCHLOROMETHANE UG/L	32105 GMS	<3.1	<3.1	<3.1	<3.1	<3.1	<3.1	<3.1	<3.1	<3.1	<310	<310	<3.1	<3.1	<3.1
1,1-DICHLOROETHANE UG/L	34496 GMS	<4.7	<4.7	<4.7	<4.7	<4.7	<4.7	<4.7	<4.7	<4.7	<470	<470	<4.7	<4.7	<4.7
1,2-DICHLOROETHANE UG/L	34531 GMS	<2.8	<2.8	<2.8	<2.8	<2.8	<2.8	<2.8	<2.8	<2.8	<280	<280	<2.8	<2.8	<2.8
1,1-DICHLOROETHYLENE UG/L	34501 GMS	<2.8	<2.8	<2.8	<2.8	<2.8	<2.8	<2.8	<2.8	<2.8	<280	<280	<2.8	<2.8	<2.8
TRANS-1,2-DICHLORO ETHENE UG/L	34546 GMS	<1.6	<1.6	<1.6	<1.6	<1.6	<1.6	<1.6	<1.6	<1.6	7100	4000	<1.6	<1.6	<1.6
1,2-DICHLOROPROPANE UG/L	34541 GMS	<6.0	<6.0	<6.0	<6.0	<6.0	<6.0	<6.0	<6.0	<6.0	<600	<600	<6.0	<6.0	<6.0
CIS-1,3-DICHLORO PROPENE UG/L	34704 GMS	<5.0	<5.0	<5.0	<5.0	<5.0	<5.0	<5.0	<5.0	<5.0	<500	<500	<5.0	<5.0	<5.0
TRANS-1,3-DICHLORO PROPENE UG/L	34699 GMS	<6.4	<6.4	<6.4	<6.4	<6.4	<6.4	<6.4	<6.4	<6.4	<640	<640	<6.4	<6.4	<6.4

PROJECT NUMBER 86447 0405 PROJECT NAME NAVY - LEJEUNE HP3
FIELD GROUP LJHP-3 PROJECT MANAGER J.D. SHAMIS
LAB COORDINATOR JEFF SHAMIS

PARAMETERS UNITS	STORET # METHOD	SAMPLE ID/# HPGW14 LJHP-3 16	HPGW15 LJHP-3 17	HPGW16 LJHP-3 18	HPGW17 LJHP-3 19	HPGW18 LJHP-3 20	HPGW19 LJHP-3 21	HPGW20 LJHP-3 22	HPGW21 LJHP-3 23	HPGW22 LJHP-3 24	HPGW23 LJHP-3 25	HPGW24 LJHP-3 26	HPGW25 LJHP-3 27	HPGW26 LJHP-3 28	HPGW29 LJHP-3 29
DATE		05/28/87	05/28/87	05/28/87	05/28/87	05/28/87	05/28/87	05/28/87	05/28/87	05/29/87	05/29/87	05/29/87	05/29/87	05/29/87	05/29/87
TIME		11:45	13:00	13:20	14:14	13:57	15:10	15:50	18:12	10:03	09:35	11:05	11:23	12:45	13:05
ETHYLBENZENE UG/L	34371 GMS	<7.2	<7.2	<7.2	<7.2	<7.2	<7.2	<7.2	<7.2	<7.2	<720	<720	<7.2	<7.2	<7.2
METHYLENE CHLORIDE UG/L	34423 GMS	<50	<50	<50	<50	<50	<50	<50	<50	<50	<5000	<5000	<50	<50	<50
1,1,2,2-TETRACHLORO ETHANE UG/L	34516 GMS	<4.1	<4.1	<4.1	<4.1	<4.1	<4.1	<4.1	<4.1	<4.1	<410	<410	<4.1	<4.1	<4.1
TETRACHLOROETHENE UG/L	34475 GMS	<3.0	<3.0	<3.0	<3.0	<3.0	<3.0	<3.0	<3.0	<3.0	<200	<200	<3.0	<3.0	<3.0
TOLUENE UG/L	34010 GMS	<6.0	<6.0	<6.0	<6.0	<6.0	<6.0	<6.0	<6.0	<6.0	<600	<600	<6.0	<6.0	<6.0
1,1,1-TRICHL'ETHANE UG/L	34506 GMS	<3.8	<3.8	<3.8	<3.8	<3.8	<3.8	<3.8	<3.8	<3.8	<380	<380	<3.8	<3.8	<3.8
1,1,2-TRICHL'ETHANE UG/L	34511 GMS	<5.0	<5.0	<5.0	<5.0	<5.0	<5.0	<5.0	<5.0	<5.0	<500	<500	<5.0	<5.0	<5.0
TRICHLOROETHENE UG/L	39180 GMS	<1.0	<1.0	<1.0	<1.0	<1.0	<1.0	<1.0	<1.0	<1.0	4300	<100	<1.0	<1.0	<1.0
TRICHLOROFLUORO-METHANE UG/L	34488 GMS	<3.2	7.1	<3.2	<3.2	<3.2	<3.2	<3.2	<3.2	<3.2	<320	<320	<3.2	<3.2	<3.2
VINYL CHLORIDE UG/L	39175 GMS	<1.0	<1.0	<1.0	<1.0	<1.0	<1.0	<1.0	<1.0	<1.0	<100	250	<1.0	<1.0	<1.0
ACROLEIN UG/L	34210 GMS	<100	<100	<100	<100	<100	<100	<100	<100	<100	<10000	<10000	<100	<100	<100
ACRYLONITRILE UG/L	34215 GMS	<100	<100	<100	<100	<100	<100	<100	<100	<100	<10000	<10000	<100	<100	<100
DICHLORODIFLUORO-METHANE UG/L	34668 GMS	<10	<10	<10	<10	<10	<10	<10	<10	<10	<1000	<1000	<10	<10	<10
M-XYLENE UG/L	98553 GMS	<12	<12	<12	<12	<12	<12	<12	<12	<12	<1200	<1200	<12	<12	<12
O-AND/OR-P XYLENE UG/L	98554 GMS	<12	<12	<12	<12	<12	<12	<12	<12	<12	<1200	<1200	<12	<12	<12
METHYL ETHYL KETONE UG/L	81595 GMS	<48	<48	<48	<48	<48	<48	<48	<48	<48	<4800	<4800	<48	<48	<48
METHYL ISOBUT'KETONE UG/L	81596 GMS	<12	<12	<12	<12	<12	<12	<12	<12	<12	<1200	<1200	<12	<12	<12

APPENDIX J

SUPPLEMENTAL CHARACTERIZATION INVESTIGATION
SHALLOW MONITOR WELLS
ANALYTICAL RESULTS

CAMP LEJEUNE - HPIA

VOLATILE ORGANIC COMPOUNDS IN GROUNDWATER (SHALLOW WELLS)

Concentration in ug/l

CHART = HPVOL1 wp8b\hp-vol.wr1 (1)

COMPOUND	HPGW1	HPGW2	HPGW3	HPGW4-1	HPGW4-1D (GWDUP5)	HPGW5	HPGW6	HPGW7
Chloromethane	10.U	10.U	10.U	10.U	10.U	10.U	10.U	10.U
Bromomethane	10.U	10.U	10.U	10.U	10.U	10.U	10.U	10.U
Vinyl Chloride	10.U	10.U	10.U	10.U	10.U	10.U	10.U	10.U
Chloroethane	10.U	10.U	10.U	10.U	10.U	10.U	10.U	10.U
Methylene Chloride	5.U	5.U	5.U	5.U	2.J	3.BJ	3.BJ	5.U
Acetone	10.J	10.U	10.U	40.	26.	10.U	10.U	10.U
Carbon Disulfide	5.U	5.U	5.U	5.U	5.U	5.U	5.U	5.U
1,1-Dichloroethene	5.U	5.U	5.U	5.U	5.U	5.U	5.U	5.U
1,1-Dichloroethane	5.U	5.U	5.U	5.U	5.U	5.U	5.U	5.U
1,2-Dichloroethene (total)	73.	5.U	5.U	5.U	.6J	5.U	5.U	5.U
Chloroform	5.U	5.U	5.U	5.U	5.U	5.U	5.U	5.U
1,2-Dichloroethane	5.U	5.U	5.U	5.U	5.U	5.U	5.U	5.U
2-Butanone	10.U	10.U	10.U	10.U	10.U	10.U	10.U	10.U
1,1,1-Trichloroethane	5.U	5.U	5.U	5.U	5.U	5.U	5.U	5.U
Carbon Tetrachloride	5.U	5.U	5.U	5.U	5.U	5.U	5.U	5.U
Vinyl Acetate	10.U	10.U	10.U	10.U	10.U	10.U	10.U	10.U
Bromodichloromethane	5.U	5.U	5.U	5.U	5.U	5.U	5.U	5.U
1,2-Dichloropropane	5.U	5.U	5.U	5.U	5.U	5.U	5.U	5.U
cis-1,3-Dichloropropene	5.U	5.U	5.U	5.U	5.U	5.U	5.U	5.U
Trichloroethene	91.	5.U	5.U	.9J	1.J	5.U	5.U	5.U
Dibromochloromethane	5.U	5.U	5.U	5.U	5.U	5.U	5.U	5.U
1,1,2-Trichloroethane	5.U	5.U	5.U	5.U	5.U	5.U	5.U	5.U
Benzene	5.U	5.U	5.U	5.U	5.U	5.U	5.U	5.U
trans-1,3-Dichloropropene	5.U	5.U	5.U	5.U	5.U	5.U	5.U	5.U
Bromoform	5.U	5.U	5.U	5.U	5.U	5.U	5.U	5.U
4-Methyl-2-Pentanone	10.U	10.U	10.U	10.U	10.U	10.U	10.U	10.U
2-Hexanone	10.U	10.U	10.U	10.U	10.U	10.U	10.U	10.U
Tetrachloroethene	5.U	5.U	5.U	5.U	5.U	5.U	5.U	5.U
1,1,2,2-Tetrachloroethane	5.U	5.U	5.U	5.U	5.U	5.U	5.U	5.U
Toluene	5.U	5.U	5.U	5.U	5.U	5.U	5.U	5.U
Chlorobenzene	5.U	5.U	5.U	5.U	5.U	5.U	5.U	5.U
Ethylbenzene	5.U	5.U	5.U	5.U	5.U	5.U	5.U	5.U
Styrene	5.U	5.U	5.U	5.U	5.U	5.U	5.U	5.U
Xylene (total)	5.U	5.U	5.U	5.U	5.U	5.U	5.U	5.U

CAMP LEJEUNE - HPIA

VOLATILE ORGANIC COMPOUNDS IN GROUNDWATER (SHALLOW WELLS)

Concentration in ug/l

CHART = HPVOL2 wp8b\hp-vol.wr1 (2)

COMPOUND	HPGW8	HPGW9-1	HPGW10	HPGW11	HPGW12	HPGW12D (GWDUP2)	HPGW13	HPGW14
Chloromethane	10.U	10.U	10.U	10.U	10.U	10.U	10.U	10.U
Bromomethane	10.U	10.U	10.U	10.U	10.U	10.U	10.U	10.U
Vinyl Chloride	10.U	10.U	10.U	10.U	10.U	10.U	10.U	10.U
Chloroethane	10.U	10.U	10.U	10.U	10.U	10.U	10.U	10.U
Methylene Chloride	5.U	5.U	5.U	5.U	5.U	3.BJ	1.J	5.U
Acetone	10.U	10.U	10.U	10.U	10.U	10.U	10.U	10.U
Carbon Disulfide	5.U	13.	5.U	11.	5.U	5.U	5.U	5.U
1,1-Dichloroethene	5.U	5.U	5.U	5.U	5.U	5.U	5.U	5.U
1,1-Dichloroethane	5.U	5.U	5.U	5.U	5.U	5.U	5.U	5.U
1,2-Dichloroethene (total)	5.U	1200.	5.U	5.U	5.U	5.U	5.U	5.U
Chloroform	5.U	15.	5.U	5.U	5.U	5.U	5.U	5.U
1,2-Dichloroethane	5.U	5.U	5.U	5.U	5.U	5.U	5.U	5.U
2-Butanone	10.U	10.U	10.U	10.U	10.U	4.J	10.U	10.U
1,1,1-Trichloroethane	5.U	5.U	5.U	5.U	5.U	5.U	5.U	5.U
Carbon Tetrachloride	5.U	5.U	5.U	5.U	5.U	5.U	5.U	5.U
Vinyl Acetate	10.U	10.U	10.U	10.U	10.U	10.U	10.U	10.U
Bromodichloromethane	5.U	5.U	5.U	5.U	5.U	5.U	5.U	5.U
1,2-Dichloropropane	5.U	5.U	5.U	5.U	5.U	5.U	5.U	5.U
cis-1,3-Dichloropropene	5.U	5.U	5.U	5.U	5.U	5.U	5.U	5.U
Trichloroethene	2.J	14000.	5.U	5.U	5.U	5.U	5.U	5.U
Dibromochloromethane	5.U	5.U	5.U	5.U	5.U	5.U	5.U	5.U
1,1,2-Trichloroethane	5.U	5.U	5.U	5.U	5.U	5.U	5.U	5.U
Benzene	5.U	5.U	5.U	5.U	5.U	5.U	5.U	5.U
trans-1,3-Dichloropropene	5.U	5.U	5.U	5.U	5.U	5.U	5.U	5.U
Bromoform	5.U	5.U	5.U	5.U	5.U	5.U	5.U	5.U
4-Methyl-2-Pentanone	10.U	10.U	10.U	10.U	10.U	10.U	10.U	10.U
2-Hexanone	10.U	10.U	10.U	10.U	10.U	10.U	10.U	10.U
Tetrachloroethene	5.U	5.U	5.U	5.U	5.U	5.U	5.U	5.U
1,1,2,2-Tetrachloroethane	5.U	5.U	5.U	5.U	5.U	5.U	5.U	5.U
Toluene	5.U	330.J	5.U	5.U	5.U	5.U	5.U	5.U
Chlorobenzene	5.U	5.U	5.U	5.U	5.U	5.U	5.U	5.U
Ethylbenzene	5.U	700.	5.U	5.U	5.U	5.U	5.U	5.U
Styrene	5.U	5.U	5.U	5.U	5.U	5.U	5.U	5.U
Xylene (total)	5.U	3300.	5.U	5.U	5.U	5.U	5.U	5.U

CAMP LEJEUNE - HPIA

VOLATILE ORGANIC COMPOUNDS IN GROUNDWATER (SHALLOW WELLS)

Concentration in ug/l

CHART = HPVOL3 wp8b\hp-vol.wr1 (3)

COMPOUND	HPGW15	HPGW16	HPGW17-1	HPGW19	HPGW20	HPGW21	HPGW22	HPGW23
Chloromethane	10.U	10.U	10.U	10.U	10.U	10.U	10.U	10.U
Bromomethane	10.U	10.U	10.U	10.U	10.U	10.U	10.U	10.U
Vinyl Chloride	10.U	10.U	10.U	10.U	10.U	10.U	10.U	8.J
Chloroethane	10.U	10.U	10.U	10.U	10.U	10.U	10.U	10.U
Methylene Chloride	5.U	5.U	5.U	5.U	.9J	4.J	9.	5.U
Acetone	10.U	10.U	10.U	10.U	10.U	4.BJ	10.U	10.U
Carbon Disulfide	5.U	5.U	5.U	5.U	2.J	5.U	5.U	5.
1,1-Dichloroethene	5.U	5.U	5.U	5.U	5.U	5.U	5.U	5.U
1,1-Dichloroethane	5.U	5.U	5.U	5.U	5.U	5.U	5.U	5.U
1,2-Dichloroethene (total)	7.	5.U	5.U	.8J	5.U	5.U	5.U	8900.
Chloroform	5.U	5.U	5.U	5.U	5.U	5.U	5.U	5.U
1,2-Dichloroethane	5.U	5.U	5.U	5.U	5.U	5.U	5.U	5.U
2-Butanone	10.U	10.U	10.U	10.U	10.U	10.U	10.U	10.U
1,1,1-Trichloroethane	5.U	5.U	5.U	5.U	5.U	5.U	5.U	5.U
Carbon Tetrachloride	5.U	5.U	5.U	5.U	5.U	5.U	5.U	5.U
Vinyl Acetate	10.U	10.U	10.U	10.U	10.U	10.U	10.U	10.U
Bromodichloromethane	5.U	5.U	5.U	5.U	5.U	5.U	5.U	5.U
1,2-Dichloropropane	5.U	5.U	5.U	5.U	5.U	5.U	5.U	5.U
cis-1,3-Dichloropropene	5.U	5.U	5.U	5.U	5.U	5.U	5.U	5.U
Trichloroethene	4.J	5.U	5.U	2.J	5.U	3.J	5.U	3700.
Dibromochloromethane	5.U	5.U	5.U	5.U	5.U	5.U	5.U	5.U
1,1,2-Trichloroethane	5.U	5.U	5.U	5.U	5.U	5.U	5.U	5.U
Benzene	5.U	5.U	5.U	5.U	5.U	5.U	5.U	24.
trans-1,3-Dichloropropene	5.U	5.U	5.U	5.U	5.U	5.U	5.U	5.U
Bromoform	5.U	5.U	5.U	5.U	5.U	5.U	5.U	5.U
4-Methyl-2-Pentanone	10.U	10.U	10.U	10.U	10.U	10.U	10.U	10.U
2-Hexanone	10.U	10.U	10.U	10.U	10.U	10.U	10.U	10.U
Tetrachloroethene	5.U	5.U	5.U	2.J	5.U	5.U	5.U	5.U
1,1,2,2-Tetrachloroethane	5.U	5.U	5.U	5.U	5.U	5.U	5.U	5.U
Toluene	5.U	5.U	5.U	5.U	5.U	5.U	5.U	13.
Chlorobenzene	5.U	5.U	5.U	5.U	5.U	5.U	5.U	5.U
Ethylbenzene	5.U	5.U	5.U	5.U	5.U	.9J	5.U	9.
Styrene	5.U	5.U	5.U	5.U	5.U	5.U	5.U	5.U
Xylene (total)	5.U	5.U	5.U	5.U	5.U	5.	5.U	41.

CAMP LEJEUNE - HPIA

VOLATILE ORGANIC COMPOUNDS IN GROUNDWATER (SHALLOW WELLS)

Concentration in ug/l

CHART = HPVOL4 wp8b\hp-vol.wr1 (4)

COMPOUND	HPGW24-1	HPGW25	HPGW26	HPGW26D (GWDUP8)	HPGW29	21GW1	22GW1	22GW2
Chloromethane	10.U	10.U	10.U	10.U	10.U	10.U	10.U	10.U
Bromomethane	10.U	10.U	10.U	10.U	10.U	10.U	10.U	10.U
Vinyl Chloride	25000.U	10.U	10.U	10.U	10.U	10.U	10.U	10.U
Chloroethane	10.U	10.U	10.U	10.U	10.U	10.U	10.U	10.U
Methylene Chloride	5.U	5.U	3.J	5.U	.9J	5.U	5.U	5.U
Acetone	10.U	10.U	7.BJ	6.BJ	10.U	10.U	10.U	10.U
Carbon Disulfide	7.	5.U	2.J	8.	5.U	5.U	5.U	5.U
1,1-Dichloroethene	65.	5.U	5.U	5.U	5.U	5.U	5.U	5.U
1,1-Dichloroethane	5.U	5.U	5.U	5.U	5.U	5.U	5.U	5.U
1,2-Dichloroethene (total)	42000.D	5.U	5.U	5.U	5.U	5.U	5.U	5.U
Chloroform	5.U	5.U	5.U	5.U	5.U	5.U	5.U	5.U
1,2-Dichloroethane	.8J	5.U	5.U	5.U	5.U	5.U	110.B	5.U
2-Butanone	10.U	10.U	10.U	10.U	10.U	10.U	10.U	10.U
1,1,1-Trichloroethane	5.U	5.U	5.U	5.U	5.U	5.U	5.U	5.U
Carbon Tetrachloride	5.U	5.U	5.U	5.U	5.U	5.U	5.U	5.U
Vinyl Acetate	10.U	10.U	10.U	10.U	10.U	10.U	10.U	10.U
Bromodichloromethane	5.U	5.U	5.U	5.U	5.U	5.U	5.U	5.U
1,2-Dichloropropane	5.U	5.U	5.U	5.U	5.U	5.U	5.U	5.U
cis-1,3-Dichloropropene	5.U	5.U	5.U	5.U	5.U	5.U	5.U	5.U
Trichloroethene	180.	5.U	5.U	5.U	5.U	5.U	5.J	5.U
Dibromochloromethane	5.U	5.U	5.U	5.U	5.U	5.U	5.U	5.U
1,1,2-Trichloroethane	3.J	5.U	5.U	5.U	5.U	5.U	5.U	5.U
Benzene	3.J	5.U	5.U	5.U	5.U	5.U	7900.	5.U
trans-1,3-Dichloropropene	5.U	5.U	5.U	5.U	5.U	5.U	5.U	5.U
Bromoform	5.U	5.U	5.U	5.U	5.U	5.U	5.U	5.U
4-Methyl-2-Pentanone	10.U	10.U	10.U	10.U	10.U	10.U	10.U	10.U
2-Hexanone	10.U	10.U	10.U	10.U	10.U	10.U	10.U	10.U
Tetrachloroethene	5.U	5.U	5.U	5.U	5.U	5.U	5.U	5.U
1,1,2,2-Tetrachloroethane	5.U	5.U	5.U	5.U	5.U	5.U	5.U	5.U
Toluene	13.	5.U	5.U	5.U	5.U	5.U	16000.	5.U
Chlorobenzene	5.U	5.U	5.U	5.U	5.U	5.U	5.U	5.U
Ethylbenzene	3.J	5.U	5.U	5.U	5.U	5.U	1900.J	5.U
Styrene	5.U	5.U	5.U	5.U	5.U	5.U	5.U	5.U
Xylene (total)	10.	5.U	5.U	5.U	5.U	5.U	9800.	5.U

CAMP LEJEUNE - HPIA

SEMI-VOLATILE ORGANIC COMPOUNDS IN GROUNDWATER (SHALLOW WELLS)

Concentration in ug/l

CHART = HPSV1A wp8c\hp-sv.wr1 (1-A)

COMPOUND	HPGW1	HPGW2	HPGW3	HPGW4-1	HPGW4-1D (GWDUP5)	HPGW5	HPGW6	HPGW7
Phenol	10.U	10.U	10.U	10.U	10.U	10.U	10.U	10.U
bis(2-Chloroethyl)ether	10.U	10.U	10.U	10.U	10.U	10.U	10.U	10.U
2-Chlorophenol	10.U	10.U	10.U	10.U	10.U	10.U	10.U	10.U
1,3-Dichlorobenzene	10.U	10.U	10.U	10.U	10.U	10.U	10.U	10.U
1,4-Dichlorobenzene	10.U	10.U	10.U	10.U	10.U	10.U	10.U	10.U
Benzyl Alcohol	10.U	10.U	10.U	10.U	10.U	10.U	10.U	10.U
1,2-Dichlorobenzene	10.U	10.U	10.U	10.U	10.U	10.U	10.U	10.U
2-Methylphenol	10.U	10.U	10.U	10.U	10.U	10.U	10.U	10.U
bis(2-Chloroisopropyl)ether	10.U	10.U	10.U	10.U	10.U	10.U	10.U	10.U
4-Methylphenol	10.U	10.U	10.U	10.U	10.U	10.U	10.U	10.U
N-Nitroso-di-n-propylamine	10.U	10.U	10.U	10.U	10.U	10.U	10.U	10.U
Hexachloroethane	10.U	10.U	10.U	10.U	10.U	10.U	10.U	10.U
Nitrobenzene	10.U	10.U	10.U	10.U	10.U	10.U	10.U	10.U
Isophorone	10.U	10.U	10.U	10.U	10.U	10.U	10.U	10.U
2-Nitrophenol	10.U	10.U	10.U	10.U	10.U	10.U	10.U	10.U
2,4-Dimethylphenol	10.U	10.U	10.U	10.U	10.U	10.U	10.U	10.U
Benzoic acid	50.U	50.U	50.U	50.U	50.U	50.U	50.U	50.U
bis(2-Chloroethoxy)methane	10.U	10.U	10.U	10.U	10.U	10.U	10.U	10.U
2,4-Dichlorophenol	10.U	10.U	10.U	10.U	10.U	10.U	10.U	10.U
1,2,4-Trichlorobenzene	10.U	10.U	10.U	10.U	10.U	10.U	10.U	10.U
Naphthalene	10.U	10.U	10.U	10.U	10.U	10.U	10.U	10.U
4-Chloroaniline	10.U	10.U	10.U	10.U	10.U	10.U	10.U	10.U
Hexachlorobutadiene	10.U	10.U	10.U	10.U	10.U	10.U	10.U	10.U
4-Chloro-3-methylphenol	10.U	10.U	10.U	10.U	10.U	10.U	10.U	10.U
2-Methylnaphthalene	10.U	10.U	10.U	10.U	10.U	10.U	10.U	10.U
Hexachlorocyclopentadiene	10.U	10.U	10.U	10.U	10.U	10.U	10.U	10.U
2,4,6-Trichlorophenol	10.U	10.U	10.U	10.U	10.U	10.U	10.U	10.U
2,4,5-Trichlorophenol	50.U	50.U	50.U	50.U	50.U	50.U	50.U	50.U
2-Chloronaphthalene	10.U	10.U	10.U	10.U	10.U	10.U	10.U	10.U
2-Nitroaniline	50.U	50.U	50.U	50.U	50.U	50.U	50.U	50.U
Dimethylphthalate	10.U	10.U	10.U	10.U	10.U	10.U	10.U	10.U
Acenaphthylene	10.U	10.U	10.U	10.U	10.U	10.U	10.U	10.U
2,6-Dinitrotoluene	10.U	10.U	10.U	10.U	10.U	10.U	10.U	10.U

PROJECT Camp Lejeune

PREPARED BY Sally Gunn

DATE April 1991

CHECKED BY [illegible]

DATE 5/10/91

...MENTS

CAMP LEJEUNE - HPIA

SEMI-VOLATILE ORGANIC COMPOUNDS IN GROUNDWATER (SHALLOW WELLS)

Concentration in ug/l

CHART = HPSV1B

wp8c\hp-sv.wr1 (1-B)

COMPOUND	HPGW1	HPGW2	HPGW3	HPGW4-1	HPGW4-1D (GWDUP5)	HPGW5	HPGW6	HPGW7
3-Nitroaniline	50.U	50.U	50.U	50.U	50.U	50.U	50.U	50.U
Acenaphthene	10.U	10.U	10.U	10.U	10.U	10.U	10.U	10.U
2,4-Dinitrophenol	50.U	50.U	50.U	50.U	50.U	50.U	50.U	50.U
4-Nitrophenol	50.U	50.U	50.U	50.U	50.U	50.U	50.U	50.U
Dibenzofuran	10.U	10.U	10.U	10.U	10.U	10.U	10.U	10.U
2,4-Dinitrotoluene	10.U	10.U	10.U	10.U	10.U	10.U	10.U	10.U
Diethylphthalate	10.U	10.U	10.U	10.U	10.U	10.U	10.U	10.U
4-Chlorophenyl-phenylether	10.U	10.U	10.U	10.U	10.U	10.U	10.U	10.U
Fluorene	10.U	10.U	10.U	10.U	10.U	10.U	10.U	10.U
4-Nitroaniline	50.U	50.U	50.U	50.U	50.U	50.U	50.U	50.U
4,6-Dinitro-2-methylphenol	50.U	50.U	50.U	50.U	50.U	50.U	50.U	50.U
N-Nitrosodiphenylamine	10.U	10.U	10.U	10.U	10.U	10.U	10.U	10.U
4-Bromophenyl-phenylether	10.U	10.U	10.U	10.U	10.U	10.U	10.U	10.U
Hexachlorobenzene	10.U	10.U	10.U	10.U	10.U	10.U	10.U	10.U
Pentachlorophenol	50.U	50.U	50.U	50.U	50.U	50.U	50.U	50.U
Phenanthrene	10.U	10.U	10.U	10.U	10.U	10.U	10.U	10.U
Anthracene	10.U	10.U	10.U	10.U	10.U	10.U	10.U	10.U
Di-n-butylphthalate	10.U	10.U	10.U	10.U	10.U	10.U	10.U	10.U
Fluoranthene	10.U	10.U	10.U	10.U	10.U	10.U	10.U	10.U
Pyrene	10.U	10.U	10.U	10.U	10.U	10.U	10.U	10.U
Butylbenzylphthalate	10.U	10.U	10.U	10.U	10.U	10.U	10.U	10.U
3,3'-Dichlorobenzidine	20.U	20.U	20.U	20.U	20.U	20.U	20.U	20.U
Benzo(a)anthracene	10.U	10.U	10.U	10.U	10.U	10.U	10.U	10.U
Chrysene	10.U	10.U	10.U	10.U	10.U	10.U	10.U	10.U
bis(2-Ethylhexyl)phthalate	10.U	10.U	10.U	10.U	10.U	10.U	10.U	10.U
Di-n-octylphthalate	10.U	10.U	10.U	10.U	10.U	10.U	10.U	10.U
Benzo(b)fluoranthene	10.U	10.U	10.U	10.U	10.U	10.U	10.U	10.U
Benzo(k)fluoranthene	10.U	10.U	10.U	10.U	10.U	10.U	10.U	10.U
Benzo(a)pyrene	10.U	10.U	10.U	10.U	10.U	10.U	10.U	10.U
Indeno(1,2,3-cd)pyrene	10.U	10.U	10.U	10.U	10.U	10.U	10.U	10.U
Dibenz(a,h)anthracene	10.U	10.U	10.U	10.U	10.U	10.U	10.U	10.U
Benzo(g,h,i)perylene	10.U	10.U	10.U	10.U	10.U	10.U	10.U	10.U

PROJECT Camp Lejeune

PREPARED BY Judy Gama

DATE April 1991

CHECKED BY [illegible]

DATE 5/10/91

COMMENTS

CAMP LEJEUNE - HPIA

SEMI-VOLATILE ORGANIC COMPOUNDS IN GROUNDWATER (SHALLOW WELLS)

Concentration in ug/l

CHART = HPSV2A

wp8c\hp-sv.wr1 (2-A)

COMPOUND	HPGW8	HPGW9-1	HPGW10	HPGW11	HPGW12	HPGW12D (GWDUP2)	HPGW13	HPGW14
Phenol	10.U	10.U	10.U	10.U	10.U	10.U	10.U	10.U
bis(2-Chloroethyl)ether	10.U	10.U	10.U	10.U	10.U	10.U	10.U	10.U
2-Chlorophenol	10.U	10.U	10.U	10.U	10.U	10.U	10.U	10.U
1,3-Dichlorobenzene	10.U	10.U	10.U	10.U	10.U	10.U	10.U	10.U
1,4-Dichlorobenzene	10.U	10.U	10.U	10.U	10.U	10.U	10.U	10.U
Benzyl Alcohol	10.U	10.U	10.U	10.U	10.U	10.U	10.U	10.U
1,2-Dichlorobenzene	10.U	10.U	10.U	10.U	10.U	10.U	10.U	10.U
2-Methylphenol	10.U	10.U	10.U	10.U	10.U	10.U	10.U	10.U
bis(2-Chloroisopropyl)ether	10.U	10.U	10.U	10.U	10.U	10.U	10.U	10.U
4-Methylphenol	10.U	10.U	10.U	10.U	10.U	10.U	10.U	10.U
N-Nitroso-di-n-propylamine	10.U	10.U	10.U	10.U	10.U	10.U	10.U	10.U
Hexachloroethane	10.U	10.U	10.U	10.U	10.U	10.U	10.U	10.U
Nitrobenzene	10.U	10.U	10.U	10.U	10.U	10.U	10.U	10.U
Isophorone	10.U	10.U	10.U	10.U	10.U	10.U	10.U	10.U
2-Nitrophenol	10.U	10.U	10.U	10.U	10.U	10.U	10.U	10.U
2,4-Dimethylphenol	10.U	10.U	10.U	10.U	10.U	10.U	10.U	10.U
Benzoic acid	50.U	50.U	50.U	50.U	50.U	50.U	50.U	50.U
bis(2-Chloroethoxy)methane	10.U	10.U	10.U	10.U	10.U	10.U	10.U	10.U
2,4-Dichlorophenol	10.U	10.U	10.U	10.U	10.U	10.U	10.U	10.U
1,2,4-Trichlorobenzene	10.U	10.U	10.U	10.U	10.U	10.U	10.U	10.U
Naphthalene	10.U	190.	10.U	10.U	10.U	10.U	10.U	10.U
4-Chloroaniline	10.U	10.U	10.U	10.U	10.U	10.U	10.U	10.U
Hexachlorobutadiene	10.U	10.U	10.U	10.U	10.U	10.U	10.U	10.U
4-Chloro-3-methylphenol	10.U	10.U	10.U	10.U	10.U	10.U	10.U	10.U
2-Methylnaphthalene	10.U	49.	10.U	10.U	10.U	10.U	10.U	10.U
Hexachlorocyclopentadiene	10.U	10.U	10.U	10.U	10.U	10.U	10.U	10.U
2,4,6-Trichlorophenol	10.U	10.U	10.U	10.U	10.U	10.U	10.U	10.U
2,4,5-Trichlorophenol	50.U	50.U	50.U	50.U	50.U	50.U	50.U	50.U
2-Chloronaphthalene	10.U	10.U	10.U	10.U	10.U	10.U	10.U	10.U
2-Nitroaniline	50.U	50.U	50.U	50.U	50.U	50.U	50.U	50.U
Dimethylphthalate	10.U	10.U	10.U	10.U	10.U	10.U	10.U	10.U
Acenaphthylene	10.U	10.U	10.U	10.U	10.U	10.U	10.U	10.U
2,6-Dinitrotoluene	10.U	10.U	10.U	10.U	10.U	10.U	10.U	10.U

PROJECT Camp Lejeune

PREPARED BY Judy Yuma

DATE April 1991

CHECKED BY [illegible]

DATE 5/6/91

CAMP LEJEUNE - HPIA

SEMI-VOLATILE ORGANIC COMPOUNDS IN GROUNDWATER (SHALLOW WELLS)

Concentration in ug/l

CHART = HPSV2B wp8c\hp-sv.wr1 (2-B)

COMPOUND	HPGW8	HPGW9-1	HPGW10	HPGW11	HPGW12	HPGW12D (GWDUP2)	HPGW13	HPGW14
3-Nitroaniline	50.U	50.U	50.U	50.U	50.U	50.U	50.U	50.U
Acenaphthene	10.U	10.U	10.U	10.U	10.U	10.U	10.U	10.U
2,4-Dinitrophenol	50.U	50.U	50.U	50.U	50.U	50.U	50.U	50.U
4-Nitrophenol	50.U	50.U	50.U	50.U	50.U	50.U	50.U	50.U
Dibenzofuran	10.U	10.U	10.U	10.U	10.U	10.U	10.U	10.U
2,4-Dinitrotoluene	10.U	10.U	10.U	10.U	10.U	10.U	10.U	10.U
Diethylphthalate	10.U	10.U	10.U	10.U	10.U	10.U	10.U	10.U
4-Chlorophenyl-phenylether	10.U	10.U	10.U	10.U	10.U	10.U	10.U	10.U
Fluorene	10.U	10.U	10.U	10.U	10.U	10.U	10.U	10.U
4-Nitroaniline	50.U	50.U	50.U	50.U	50.U	50.U	50.U	50.U
4,6-Dinitro-2-methylphenol	50.U	50.U	50.U	50.U	50.U	50.U	50.U	50.U
N-Nitrosodiphenylamine	10.U	10.U	10.U	10.U	10.U	10.U	10.U	10.U
4-Bromophenyl-phenylether	10.U	10.U	10.U	10.U	10.U	10.U	10.U	10.U
Hexachlorobenzene	10.U	10.U	10.U	10.U	10.U	10.U	10.U	10.U
Pentachlorophenol	50.U	50.U	50.U	50.U	50.U	50.U	50.U	50.U
Phenanthrene	10.U	10.U	10.U	10.U	10.U	10.U	10.U	10.U
Anthracene	10.U	10.U	10.U	10.U	10.U	10.U	10.U	10.U
Di-n-butylphthalate	10.U	10.U	10.U	10.U	10.U	10.U	10.U	10.U
Fluoranthene	10.U	10.U	10.U	10.U	10.U	10.U	10.U	10.U
Pyrene	10.U	10.U	10.U	10.U	10.U	10.U	10.U	10.U
Butylbenzylphthalate	10.U	10.U	10.U	10.U	10.U	10.U	10.U	10.U
3,3'-Dichlorobenzidine	20.U	20.U	20.U	20.U	20.U	20.U	20.U	20.U
Benzo(a)anthracene	10.U	10.U	10.U	10.U	10.U	10.U	10.U	10.U
Chrysene	10.U	10.U	10.U	10.U	10.U	10.U	10.U	10.U
bis(2-Ethylhexyl)phthalate	2.J	10.U	10.U	10.U	10.U	10.U	10.U	10.U
Di-n-octylphthalate	10.U	10.U	10.U	10.U	10.U	10.U	10.U	10.U
Benzo(b)fluoranthene	10.U	10.U	10.U	10.U	10.U	10.U	10.U	10.U
Benzo(k)fluoranthene	10.U	10.U	10.U	10.U	10.U	10.U	10.U	10.U
Benzo(a)pyrene	10.U	10.U	10.U	10.U	10.U	10.U	10.U	10.U
Indeno(1,2,3-cd)pyrene	10.U	10.U	10.U	10.U	10.U	10.U	10.U	10.U
Dibenz(a,h)anthracene	10.U	10.U	10.U	10.U	10.U	10.U	10.U	10.U
Benzo(g,h,i)perylene	10.U	10.U	10.U	10.U	10.U	10.U	10.U	10.U

PROJECT Camp Lejeune

PREPARED BY Judy Duma

DATE April 1991

CHECKED BY [illegible]

DATE 5/6/91

COMMENTS

CAMP LEJEUNE - HPIA

SEMI-VOLATILE ORGANIC COMPOUNDS IN GROUNDWATER (SHALLOW WELLS)

Concentration in ug/l

CHART = HPSV3A wp8c\hp-sv.wr1 (3-A)

COMPOUND	HPGW15	HPGW16	HPGW17-1	HPGW19	HPGW20	HPGW21	HPGW22	HPGW23
Phenol	10.U	10.U	10.U	10.U	10.U	10.U	10.U	10.U
bis(2-Chloroethyl)ether	10.U	10.U	10.U	10.U	10.U	10.U	10.U	10.U
2-Chlorophenol	10.U	10.U	10.U	10.U	10.U	10.U	10.U	10.U
1,3-Dichlorobenzene	10.U	10.U	10.U	10.U	10.U	10.U	10.U	10.U
1,4-Dichlorobenzene	10.U	10.U	10.U	10.U	10.U	10.U	10.U	10.U
Benzyl Alcohol	10.U	10.U	10.U	10.U	10.U	10.U	10.U	10.U
1,2-Dichlorobenzene	10.U	10.U	10.U	10.U	10.U	10.U	10.U	10.U
2-Methylphenol	10.U	10.U	10.U	10.U	10.U	10.U	10.U	10.U
bis(2-Chloroisopropyl)ether	10.U	10.U	10.U	10.U	10.U	10.U	10.U	10.U
4-Methylphenol	10.U	10.U	10.U	10.U	10.U	10.U	10.U	10.U
N-Nitroso-di-n-propylamine	10.U	10.U	10.U	10.U	10.U	10.U	10.U	10.U
Hexachloroethane	10.U	10.U	10.U	10.U	10.U	10.U	10.U	10.U
Nitrobenzene	10.U	10.U	10.U	10.U	10.U	10.U	10.U	10.U
Isophorone	10.U	10.U	10.U	10.U	10.U	10.U	10.U	10.U
2-Nitrophenol	10.U	10.U	10.U	10.U	10.U	10.U	10.U	10.U
2,4-Dimethylphenol	10.U	10.U	10.U	10.U	10.U	10.U	10.U	10.U
Benzoic acid	50.U	50.U	50.U	50.U	50.U	50.U	50.U	50.U
bis(2-Chloroethoxy)methane	10.U	10.U	10.U	10.U	10.U	10.U	10.U	10.U
2,4-Dichlorophenol	10.U	10.U	10.U	10.U	10.U	10.U	10.U	10.U
1,2,4-Trichlorobenzene	10.U	10.U	10.U	10.U	10.U	10.U	10.U	10.U
Naphthalene	10.U	10.U	10.U	10.U	10.U	10.U	10.U	10.U
4-Chloroaniline	10.U	10.U	10.U	10.U	10.U	10.U	10.U	10.U
Hexachlorobutadiene	10.U	10.U	10.U	10.U	10.U	10.U	10.U	10.U
4-Chloro-3-methylphenol	10.U	10.U	10.U	10.U	10.U	10.U	10.U	10.U
2-Methylnaphthalene	10.U	10.U	10.U	10.U	10.U	10.U	10.U	10.U
Hexachlorocyclopentadiene	10.U	10.U	10.U	10.U	10.U	10.U	10.U	10.U
2,4,6-Trichlorophenol	10.U	10.U	10.U	10.U	10.U	10.U	10.U	10.U
2,4,5-Trichlorophenol	50.U	50.U	50.U	50.U	50.U	50.U	50.U	50.U
2-Chloronaphthalene	10.U	10.U	10.U	10.U	10.U	10.U	10.U	10.U
2-Nitroaniline	50.U	50.U	50.U	50.U	50.U	50.U	50.U	50.U
Dimethylphthalate	10.U	10.U	10.U	10.U	10.U	10.U	10.U	10.U
Acenaphthylene	10.U	10.U	10.U	10.U	10.U	10.U	10.U	10.U
2,6-Dinitrotoluene	10.U	10.U	10.U	10.U	10.U	10.U	10.U	10.U

CAMP LEJEUNE - HPIA

SEMI-VOLATILE ORGANIC COMPOUNDS IN GROUNDWATER (SHALLOW WELLS)

Concentration in ug/l

CHART = HPSV3B wp8c\hp-sv.wr1 (3-B)

COMPOUND	HPGW15	HPGW16	HPGW17-1	HPGW19	HPGW20	HPGW21	HPGW22	HPGW23
3-Nitroaniline	50.U	50.U	50.U	50.U	50.U	50.U	50.U	50.U
Acenaphthene	10.U	10.U	10.U	10.U	10.U	10.U	3.J	10.U
2,4-Dinitrophenol	50.U	50.U	50.U	50.U	50.U	50.U	50.U	50.U
4-Nitrophenol	50.U	50.U	50.U	50.U	50.U	50.U	50.U	50.U
Dibenzofuran	10.U	10.U	10.U	10.U	10.U	10.U	2.J	10.U
2,4-Dinitrotoluene	10.U	10.U	10.U	10.U	10.U	10.U	10.U	10.U
Diethylphthalate	10.U	10.U	10.U	10.U	10.U	10.U	10.U	10.U
4-Chlorophenyl-phenylether	10.U	10.U	10.U	10.U	10.U	10.U	10.U	10.U
Fluorene	10.U	10.U	10.U	10.U	10.U	10.U	5.J	10.U
4-Nitroaniline	50.U	50.U	50.U	50.U	50.U	50.U	50.U	50.U
4,6-Dinitro-2-methylphenol	50.U	50.U	50.U	50.U	50.U	50.U	50.U	50.U
N-Nitrosodiphenylamine	10.U	10.U	10.U	10.U	10.U	10.U	10.U	10.U
4-Bromophenyl-phenylether	10.U	10.U	10.U	10.U	10.U	10.U	10.U	10.U
Hexachlorobenzene	10.U	10.U	10.U	10.U	10.U	10.U	10.U	10.U
Pentachlorophenol	50.U	50.U	50.U	50.U	50.U	50.U	50.U	50.U
Phenanthrene	10.U	10.U	10.U	10.U	10.U	10.U	10.U	10.U
Anthracene	10.U	10.U	10.U	10.U	10.U	10.U	10.U	10.U
Di-n-butylphthalate	10.U	10.U	10.U	10.U	10.U	10.U	10.U	10.U
Fluoranthene	10.U	10.U	10.U	10.U	10.U	10.U	10.U	10.U
Pyrene	10.U	10.U	10.U	10.U	10.U	10.U	10.U	10.U
Butylbenzylphthalate	10.U	10.U	10.U	10.U	10.U	10.U	10.U	10.U
3,3'-Dichlorobenzidine	20.U	20.U	20.U	20.U	20.U	20.U	20.U	20.U
Benzo(a)anthracene	10.U	10.U	10.U	10.U	10.U	10.U	10.U	10.U
Chrysene	10.U	10.U	10.U	10.U	10.U	10.U	10.U	10.U
bis(2-Ethylhexyl)phthalate	10.U	10.U	10.U	10.U	10.U	10.U	10.U	3.J
Di-n-octylphthalate	10.U	10.U	10.U	10.U	10.U	10.U	10.U	10.U
Benzo(b)fluoranthene	10.U	10.U	10.U	10.U	10.U	10.U	10.U	10.U
Benzo(k)fluoranthene	10.U	10.U	10.U	10.U	10.U	10.U	10.U	10.U
Benzo(a)pyrene	10.U	10.U	10.U	10.U	10.U	10.U	10.U	10.U
Indeno(1,2,3-cd)pyrene	10.U	10.U	10.U	10.U	10.U	10.U	10.U	10.U
Dibenz(a,h)anthracene	10.U	10.U	10.U	10.U	10.U	10.U	10.U	10.U
Benzo(g,h,i)perylene	10.U	10.U	10.U	10.U	10.U	10.U	10.U	10.U

CAMP LEJEUNE - HPIA

SEMI-VOLATILE ORGANIC COMPOUNDS IN GROUNDWATER (SHALLOW WELLS)

Concentration in ug/l

CHART = HPSV4A

wp8c\hp-sv.wr1 (4-A)

COMPOUND	HPG24-1	HPGW25	HPGW26	HPGW26D (GWDUP8)	HPGW29	21GW1	22GW1	22GW2
Phenol	10.U	10.U	10.U	10.U	10.U	10.U	10.U	10.U
bis(2-Chloroethyl)ether	10.U	10.U	10.U	10.U	10.U	10.U	10.U	10.U
2-Chlorophenol	10.U	10.U	10.U	10.U	10.U	10.U	10.U	10.U
1,3-Dichlorobenzene	10.U	10.U	10.U	10.U	10.U	10.U	10.U	10.U
1,4-Dichlorobenzene	10.U	10.U	10.U	10.U	10.U	10.U	10.U	10.U
Benzyl Alcohol	10.U	10.U	10.U	10.U	10.U	10.U	10.U	10.U
1,2-Dichlorobenzene	10.U	10.U	10.U	10.U	10.U	10.U	10.U	10.U
2-Methylphenol	10.U	10.U	10.U	10.U	10.U	10.U	10.J	10.U
bis(2-Chloroisopropyl)ether	10.U	10.U	10.U	10.U	10.U	10.U	10.U	10.U
4-Methylphenol	10.U	10.U	10.U	10.U	10.U	10.U	10.U	10.U
N-Nitroso-di-n-propylamine	10.U	10.U	10.U	10.U	10.U	10.U	10.U	10.U
Hexachloroethane	10.U	10.U	10.U	10.U	10.U	10.U	10.U	10.U
Nitrobenzene	10.U	10.U	10.U	10.U	10.U	10.U	10.U	10.U
Isophorone	10.U	10.U	10.U	10.U	10.U	10.U	10.U	10.U
2-Nitrophenol	10.U	10.U	10.U	10.U	10.U	10.U	10.U	10.U
2,4-Dimethylphenol	10.U	10.U	10.U	10.U	10.U	10.U	10.U	10.U
Benzoic acid	50.U	50.U	50.U	50.U	50.U	50.U	50.U	50.U
bis (2-Chloroethoxy) methane	10.U	10.U	10.U	10.U	10.U	10.U	10.U	10.U
2,4-Dichlorophenol	10.U	10.U	10.U	10.U	10.U	10.U	10.U	10.U
1,2,4-Trichlorobenzene	10.U	10.U	10.U	10.U	10.U	10.U	10.U	10.U
Naphthalene	130.	10.U	10.U	10.U	10.U	10.U	230.	10.U
4-Chloroaniline	10.U	10.U	10.U	10.U	10.U	10.U	10.U	10.U
Hexachlorobutadiene	10.U	10.U	10.U	10.U	10.U	10.U	10.U	10.U
4-Chloro-3-methylphenol	10.U	10.U	10.U	10.U	10.U	10.U	10.U	10.U
2-Methylnaphthalene	3.J	10.U	10.U	10.U	10.U	10.U	28.	10.U
Hexachlorocyclopentadiene	10.U	10.U	10.U	10.U	10.U	10.U	10.U	10.U
2,4,6-Trichlorophenol	10.U	10.U	10.U	10.U	10.U	10.U	10.U	10.U
2,4,5-Trichlorophenol	50.U	50.U	50.U	50.U	50.U	50.U	50.U	50.U
2-Chloronaphthalene	10.U	10.U	10.U	10.U	10.U	10.U	10.U	10.U
2-Nitroaniline	50.U	50.U	50.U	50.U	50.U	50.U	50.U	50.U
Dimethylphthalate	10.U	10.U	10.U	10.U	10.U	10.U	10.U	10.U
Acenaphthylene	10.U	10.U	10.U	10.U	10.U	10.U	10.U	10.U
2,6-Dinitrotoluene	10.U	10.U	10.U	10.U	10.U	10.U	10.U	10.U

PROJECT

PREPARED BY

DATE

CHECKED BY

DATE

COMMENTS

CAMP LEJEUNE - HPIA

SEMI-VOLATILE ORGANIC COMPOUNDS IN GROUNDWATER (SHALLOW WELLS)

Concentration in ug/l

CHART = HPSV4B

wp8c\hp-sv.wr1 (4-B)

COMPOUND	HPG24-1	HPGW25	HPGW26	HPGW26D (GWDUP8)	HPGW29	21GW1	22GW1	22GW2
3-Nitroaniline	50.U	50.U	50.U	50.U	50.U	50.U	50.U	50.U
Acenaphthene	6.J	10.U	10.U	10.U	10.U	10.U	10.U	10.U
2,4-Dinitrophenol	50.U	50.U	50.U	50.U	50.U	50.U	50.U	50.U
4-Nitrophenol	50.U	50.U	50.U	50.U	50.U	50.U	50.U	50.U
Dibenzofuran	10.U	10.U	10.U	10.U	10.U	10.U	10.U	10.U
2,4-Dinitrotoluene	10.U	10.U	10.U	10.U	10.U	10.U	10.U	10.U
Diethylphthalate	10.U	10.U	10.U	10.U	10.U	10.U	10.U	10.U
4-Chlorophenyl-phenylether	10.U	10.U	10.U	10.U	10.U	10.U	10.U	10.U
Fluorene	10.U	10.U	10.U	10.U	10.U	10.U	10.U	10.U
4-Nitroaniline	50.U	50.U	50.U	50.U	50.U	50.U	50.U	50.U
4,6-Dinitro-2-methylphenol	50.U	50.U	50.U	50.U	50.U	50.U	50.U	50.U
N-Nitrosodiphenylamine	10.U	10.U	10.U	10.U	10.U	10.U	10.U	10.U
4-Bromophenyl-phenylether	10.U	10.U	10.U	10.U	10.U	10.U	10.U	10.U
Hexachlorobenzene	10.U	10.U	10.U	10.U	10.U	10.U	10.U	10.U
Pentachlorophenol	50.U	50.U	50.U	50.U	50.U	50.U	50.U	50.U
Phenanthrene	10.U	10.U	10.U	10.U	10.U	10.U	10.U	10.U
Anthracene	10.U	10.U	10.U	10.U	10.U	10.U	10.U	10.U
Di-n-butylphthalate	10.U	10.U	10.U	10.U	10.U	10.U	10.U	10.U
Fluoranthene	10.U	10.U	10.U	10.U	10.U	10.U	10.U	10.U
Pyrene	10.U	10.U	10.U	10.U	10.U	10.U	10.U	10.U
Butylbenzylphthalate	10.U	10.U	10.U	10.U	10.U	10.U	10.U	10.U
3,3'-Dichlorobenzidine	20.U	20.U	20.U	20.U	20.U	20.U	20.U	20.U
Benzo(a)anthracene	10.U	10.U	10.U	10.U	10.U	10.U	10.U	10.U
Chrysene	10.U	10.U	10.U	10.U	10.U	10.U	10.U	10.U
bis(2-Ethylhexyl)phthalate	10.U	10.U	10.U	10.U	10.U	10.U	10.U	10.U
Di-n-octylphthalate	10.U	10.U	10.U	10.U	10.U	10.U	10.U	10.U
Benzo(b)fluoranthene	10.U	10.U	10.U	10.U	10.U	10.U	10.U	10.U
Benzo(k)fluoranthene	10.U	10.U	10.U	10.U	10.U	10.U	10.U	10.U
Benzo(a)pyrene	10.U	10.U	10.U	10.U	10.U	10.U	10.U	10.U
Indeno(1,2,3-cd)pyrene	10.U	10.U	10.U	10.U	10.U	10.U	10.U	10.U
Dibenz(a,h)anthracene	10.U	10.U	10.U	10.U	10.U	10.U	10.U	10.U
Benzo(g,h,i)perylene	10.U	10.U	10.U	10.U	10.U	10.U	10.U	10.U

PROJECT Camp Lejeune

PREPARED BY [illegible]

DATE April 1991

CHECKED BY [illegible]

DATE 5/15/91

COMMENTS

CAMP LEJEUNE - HPIA

INORGANICS IN GROUNDWATER (SHALLOW WELLS)

Concentration in ug/l

CHART = HPING1 wp8e\hp-inor.wr1 (1)

METAL/COMPOUND	HPGW1	HPGW2	HPGW3	HPGW4-1	HPGW4-1D (GWDUP5)	HPGW5	HPGW6	HPGW7
Aluminum	30600	56000	19300	97000	96800	3580	1050000	161000
Antimony	13.3U	15.6B	46.5B	21.9B	34.6B	13.3U	13.3U	22.0U
Arsenic	8.0B	24.1	15.6	15.5	19.4	1.5U	31.5	18.3
Barium	166B	84.4B	55.5B	268	273	13.6B	1960	670
Beryllium	6.0	1.7B	1.2B	6.7	6.4	0.86B	20.0	4.8B
Cadmium	4.3U	4.3U	4.3U	4.3U	4.3U	4.3U	4.3U	4.3U
Calcium	30100	46800	29800	296000	310000	80100	11200	10500
Chromium	87.0	64.3	16.7	187	195	3.6B	1590	313
Cobalt	6.0U	6.1B	8.0U	14.4B	18.2B	6.0U	51.9	17.7B
Copper	17.4B	17.3B	5.5B	35.4	39.2	4.1B	194	44.2
Iron	64100	34800	10400	100000	106000	3100	265000	65700
Lead	16.6	29.4	11.4	66.6	45.6	13.6	60.7	112
Magnesium	5590	3980B	2580B	12100	12500	11100	49700	18200
Manganese	168	77.7	53.9	425	436	162	487	136
Mercury	0.10U	0.10U	0.10U	0.10U	0.10U	0.10U	1.4	0.25
Nickel	31.3B	16.9B	12.1B	57.0	64.3	5.2U	161	50.7
Potassium	3940B	4820B	2230B	9710	9520	3930B	55300	12000
Selenium	3.4U	3.6B	3.4U	3.4U	3.4U	4.4B	3.4U	2.6B
Silver	4.7B	1.6U	1.6U	1.6U	2.4B	1.6U	2.3B	6.2U
Sodium	10900	3680B	6390	11400	11100	22400	14800	11500
Thallium	4.4U	4.4U	4.4U	4.4U	4.4U	4.4U	4.4U	1.1U
Vanadium	92.1	160	35.9B	213	222	2.4U	1610	285
Zinc	163	88.2	59.8	228	272	71.3	537	218
Cyanide	10.0U	11.2U	11.2	10.0U	10.0U	10.0U	10.0U	10.0U

CAMP LEJEUNE - HPIA

INORGANICS IN GROUNDWATER (SHALLOW WELLS)

Concentration in ug/l

CHART = HPING2 wp8e\hp-inor.wr1 (2)

METAL/COMPOUND	HPGW8	HPGW9-1	HPGW10	HPGW11	HPGW12	HPGW12D (GWDUP2)	HPGW13	HPGW14
Aluminum	91700	59100	348000	95200	24000	2110	13500	109000
Antimony	22.0U	17.6B	22.0U	22.0U	22.0U	22.0U	13.3U	13.3U
Arsenic	28.4	3.0B	39.9	9.1B	1.8U	1.8U	47.0	45.6
Barium	173B	126B	492	298	91.5B	46.3B	129B	299
Beryllium	2.1U	0.79B	5.6	2.1U	2.1U	2.1U	0.59B	2.7B
Cadmium	4.3U	4.3U	4.3U	4.3U	4.3U	4.3U	4.3U	4.3U
Calcium	10600	23500	56200	9730	34100	117000	4100B	4340B
Chromium	91.8	66.4	310	140	25.5	5.2U	48.9	127
Cobalt	7.9B	6.0U	31.4B	6.4U	6.4B	6.4U	9.3B	12.9B
Copper	19.5B	27.1	72.2	30.0	5.9B	3.2B	17.0B	34.8
Iron	40900	19800	119000	31800	5600	100	33500	87200
Lead	54.1	128	186	45.2	15.7	1.0U	9.0	66.5
Magnesium	5780	11000	14900	11200	7700	119B	7700	8770
Manganese	46.5	45.0	255	103	18.3	1.8U	30.3	80.0
Mercury	0.13B	0.10U	0.82	0.10B	0.10U	0.10U	0.10U	0.26
Nickel	25.2B	15.1B	92.2	23.6B	11.0U	11.0U	21.1B	41.6
Potassium	5300	5370	17100	7320	2600B	5280	4520B	6890
Selenium	3.6B	3.6B	1.6U	3.7B	5.8	1.6U	3.4U	3.4U
Silver	6.2U	1.6U	6.2U	6.2U	6.2U	6.2U	2.1B	2.5B
Sodium	8600	20400	3950B	5410	9310	6560	18100	11500
Thallium	1.1U	4.4U	1.1U	1.1U	1.1U	1.1U	4.4U	4.4U
Vanadium	945	75.3	376	166	31.1	6.6B	40.5B	163
Zinc	118	115	224	94.0	46.6	44.5	127	206
Cyanide	10.0U	10.0U	10.0U	10.0U	10.0U	10.0U	10.0U	10.0U

CAMP LEJEUNE - HPIA

INORGANICS IN GROUNDWATER (SHALLOW WELLS)

Concentration in ug/l

CHART = HPING3 wp8e\hp-inor.wr1 (3)

METAL/COMPOUND	HPGW15	HPGW16	HPGW17-1	HPGW19	HPGW20	HPGW21	HPGW22	HPGW23
Aluminum	18500	213000	29000	6840	289000	38500	71800	82500
Antimony	22.0U	22.0U	22.0U	13.3U	21.9B	13.3U	24.6B	24.6B
Arsenic	1.8U	17.3	1.8U	5.0B	49.4	12.1	7.2B	6.6B
Barium	119B	276	70.1B	92.9B	814	114B	102B	196B
Beryllium	2.1U	5.3	2.1U	2.3B	9.5	3.7B	0.60B	1.0B
Cadmium	4.3U	4.3U	4.3U	4.3U	4.3U	4.3U	4.3U	4.3U
Calcium	12000	33400	60800	3120B	6370	26100	96300	7890
Chromium	21.4	209	37.0	13.8	424	45.0	79.8	76.3
Cobalt	6.4U	18.7B	6.4U	6.0U	80.8	17.6B	6.0U	11.9B
Copper	12.2B	44.6B	20.0B	8.6B	97.7	28.3	40.0	30.5
Iron	4800	47200	10500	36200	152000	56600	24400	23300
Lead	16.6	100	23.7	31.7	20.0	49.4	39.4	45.0
Magnesium	5650	8110	6790	4200B	18000	10200	5210	6050
Manganese	18.3	98.3	31.3	79.0	217	136	94.1	68.8
Mercury	0.10U	0.13B	0.10U	0.10U	0.50	0.10U	0.10U	0.10U
Nickel	11.0U	41.0	11.9B	7.3B	168	30.8B	23.2B	33.2B
Potassium	3390B	12100	3530B	2370B	16600	5160	6930	3880B
Selenium	1.6U	1.6U	1.6U	3.4U	3.4U	3.5B	3.4U	3.4U
Silver	6.2U	6.2U	6.2U	2.9B	4.3B	1.6U	2.5B	6.6B
Sodium	6950	4960	4480B	23500	11000	11800	5300	6260
Thallium	1.1U	1.4B	1.1U	4.4U	4.4U	4.4U	4.4U	4.4U
Vanadium	24.9B	225	52.1	19.8B	419	178	100	77.6
Zinc	88.1	157	76.5	81.1	637	273	77.4	89.3
Cyanide	10.0U	10.0U	10.0U	10.0U	10.0U	10.0U	10.0U	10.0U

CAMP LEJEUNE - HPIA

INORGANICS IN GROUNDWATER (SHALLOW WELLS)

Concentration in ug/l

CHART = HPING4 wp8e\hp-inor.wr1 (4)

METAL/COMPOUND	HPGW24-1	HPGW25	HPGW26	HPGW26-D (GWDUP8)	HPGW29	21GW1	22GW1	22GW2
Aluminum	15400	218000	10400	7830N	47800	40400	587000	16900
Antimony	22.0U	13.3U	13.3U	13.3U	13.3U	17.0B	20.9B	13.3U
Arsenic	4.2B	13.2	1.5U	1.5U	25.6	41.4	50.3	11.0
Barium	60.1B	289	72.0B	67.7B	633	71.0B	804	67.0B
Beryllium	2.1U	2.8B	0.50U	0.50U	8.7	1.1B	5.8	0.50U
Cadmium	4.3U	4.3U	4.3U	4.3UN	4.3U	4.3U	4.3UN	4.3U
Calcium	16600	6270	2830B	2770B	59200	60400	33800	127000
Chromium	26.3	205	13.0	10.3	179	39.0	457	26.3
Cobalt	6.4U	10.5B	6.0U	6.0U	17.8B	10.8B	30.9B	10.9B
Copper	11.5B	57.7	9.1B	7.2B	39.9	13.2B	81.4	11.2B
Iron	19200	46600	19000	10900	76200	54900	101000	16200
Lead	21.4	71.6	9.0	5.2	29.1	15.8	307	16.2
Magnesium	2430B	10000	1830B	1710B	15000	10300	21200	7730
Manganese	54.8	118	10.6B	8.8B	236	200	284	763
Mercury	0.10U	0.10U	0.10U	0.10U	0.10U	0.10U	0.35	0.10U
Nickel	14.0U	39.2B	5.2U	5.2U	93.5	21.4B	186	17.0B
Potassium	3130B	13100	2230B	1580B	5900	4400B	24000	3030B
Selenium	1.6U	3.4U	3.4U	3.4UN	3.4U	3.4U	3.4U	4.2B
Silver	6.2U	3.9B	1.6U	1.6U	3.1B	1.6U	4.1B	1.6U
Sodium	11800	18200	5910	5690	7850	17400	9560	8570
Thallium	1.1U	4.4U	4.4U	4.4U	4.4U	4.4U	4.4U	4.4U
Vanadium	39.2B	259	149	83.6	108	138	518	40.3B
Zinc	70.5	119	68.1	43.1	329	233	295	91.8
Cyanide	10.0U	10.0U	10.0U	10.0U	10.0U	10.0U	10.0U	10.0U

CAMP LEJEUNE - HPIA

PESTICIDES IN GROUNDWATER (SHALLOW WELLS)

Concentration in ug/l

CHART = HPPEST1 sy\wp8b\hp-pest.wr1 (1)

PESTICIDE/PCB	HPGW1	HPGW2	HPGW3	HPGW4-1	HPGW4-1D (GWDUP5)	HPGW5	HPGW6	HPGW7
alpha-BHC	.05U	.05U	.05U	.05U	.05U	.05U	.05U	.05U
beta-BHC	.05U	.05U	.05U	.05U	.05U	.05U	.05U	.05U
delta-BHC	.05U	.05U	.05U	.05U	.05U	.05U	.05U	.05U
gamma-BHC (Lindane)	.05U	.05U	.05U	.05U	.05U	.05U	.05U	.05U
Heptachlor	.05U	.05U	.05U	.05U	.05U	.05U	.05U	.05U
Aldrin	.05U	.05U	.05U	.05U	.05U	.05U	.05U	.05U
Heptachlor epoxide	.05U	.05U	.05U	.05U	.05U	.05U	.05U	.05U
Endosulfan I	.05U	.05U	.05U	.05U	.05U	.05U	.05U	.05U
Dieldrin	.10U	.10U	.10U	.10U	.10U	.10U	.10U	.10U
4,4'-DDE	.10U	.10U	.10U	.10U	.10U	.10U	.10U	.10U
Endrin	.10U	.10U	.10U	.10U	.10U	.10U	.10U	.10U
Endosulfan II	.10U	.10U	.10U	.10U	.10U	.10U	.10U	.10U
4,4'-DDD	.10U	.10U	.10U	.10U	.10U	.10U	.10U	.10U
Endosulfan sulfate	.10U	.10U	.10U	.10U	.10U	.10U	.10U	.10U
4,4'-DDT	.10U	.10U	.10U	.10U	.10U	.10U	.10U	.10U
Methoxychlor	.50U	.50U	.50U	.50U	.50U	.50U	.50U	.50U
Endrin ketone	.10U	.10U	.10U	.10U	.10U	.10U	.10U	.10U
alpha-Chlordane	.50U	.50U	.50U	.50U	.50U	.50U	.50U	.50U
gamma-Chlordane	.50U	.50U	.50U	.50U	.50U	.50U	.50U	.50U
Toxaphene	1.0U	1.0U	1.0U	1.0U	1.0U	1.0U	1.0U	1.0U
Aroclor-1016	.50U	.50U	.50U	.50U	.50U	.50U	.50U	.50U
Aroclor-1221	.50U	.50U	.50U	.50U	.50U	.50U	.50U	.50U
Aroclor-1232	.50U	.50U	.50U	.50U	.50U	.50U	.50U	.50U
Aroclor-1242	.50U	.50U	.50U	.50U	.50U	.50U	.50U	.50U
Aroclor-1248	.50U	.50U	.50U	.50U	.50U	.50U	.50U	.50U
Aroclor-1254	1.0U	1.0U	1.0U	1.0U	1.0U	1.0U	1.0U	1.0U
Aroclor-1260	1.0U	1.0U	1.0U	1.0U	1.0U	1.0U	1.0U	1.0U

PROJECT Camp Lejeune

PREPARED BY [illegible]

DATE April 1991

CHECKED BY [illegible]

DATE 5/6/91

COMMENTS

CAMP LEJEUNE - HPIA

PESTICIDES IN GROUNDWATER (SHALLOW WELLS)

Concentration in ug/l

CHART = HPPEST2 sy\wp8b\hp-pest.wr1 (2)

PESTICIDE/PCB	HPGW8	HPGW9-1	HPGW10	HPGW11	HPGW12	HPGW12D (GWDUP2)	HPGW13	HPGW14
alpha-BHC	.05U	.05U	.05U	.05U	.05U	.05U	.05U	.05U
beta-BHC	.05U	.05U	.05U	.05U	.05U	.05U	.05U	.05U
delta-BHC	.05U	.05U	.05U	.05U	.05U	.05U	.05U	.05U
gamma-BHC (Lindane)	.05U	.05U	.05U	.05U	.05U	.05U	.05U	.05U
Heptachlor	.05U	.05U	.05U	.05U	.05U	.05U	.05U	.05U
Aldrin	.05U	.05U	.05U	.05U	.05U	.05U	.05U	.05U
Heptachlor epoxide	.05U	.05U	.05U	.05U	.05U	.05U	.05U	.05U
Endosulfan I	.05U	.05U	.05U	.05U	.05U	.05U	.05U	.05U
Dieldrin	.10U	.10U	.10U	.10U	.10U	.10U	.10U	.10U
4,4'-DDE	.10U	.10U	.10U	.10U	.10U	.10U	.10U	.10U
Endrin	.10U	.10U	.10U	.10U	.10U	.10U	.10U	.10U
Endosulfan II	.10U	.10U	.10U	.10U	.10U	.10U	.10U	.10U
4,4'-DDD	.10U	.10U	.10U	.10U	.10U	.10U	.10U	.10U
Endosulfan sulfate	.10U	.10U	.10U	.10U	.10U	.10U	.10U	.10U
4,4'-DDT	.10U	.10U	.10U	.10U	.10U	.10U	.10U	.10U
Methoxychlor	.50U	.50U	.50U	.50U	.50U	.50U	.50U	.50U
Endrin ketone	.10U	.10U	.10U	.10U	.10U	.10U	.10U	.10U
alpha-Chlordane	.50U	.50U	.50U	.50U	.50U	.50U	.50U	.50U
gamma-Chlordane	.50U	.50U	.50U	.50U	.50U	.50U	.50U	.50U
Toxaphene	1.0U	1.0U	1.0U	1.0U	1.0U	1.0U	1.0U	1.0U
Aroclor-1016	.50U	.50U	.50U	.50U	.50U	.50U	.50U	.50U
Aroclor-1221	.50U	.50U	.50U	.50U	.50U	.50U	.50U	.50U
Aroclor-1232	.50U	.50U	.50U	.50U	.50U	.50U	.50U	.50U
Aroclor-1242	.50U	.50U	.50U	.50U	.50U	.50U	.50U	.50U
Aroclor-1248	.50U	.50U	.50U	.50U	.50U	.50U	.50U	.50U
Aroclor-1254	1.0U	1.0U	1.0U	1.0U	1.0U	1.0U	1.0U	1.0U
Aroclor-1260	1.0U	1.0U	1.0U	1.0U	1.0U	1.0U	1.0U	1.0U

CAMP LEJEUNE - HPIA

PESTICIDES IN GROUNDWATER (SHALLOW WELLS)

Concentration in ug/l

CHART = HPPEST3 sy\wp8b\hp-pest.wr1 (3)

PESTICIDE/PCB	HPGW15	HPGW16	HPGW17-1	HPGW19	HPGW20	HPGW21	HPGW22	HPGW23
alpha-BHC	.05U	.05U	.05U	.05U	.05U	.05U	.05U	.05U
beta-BHC	.05U	.05U	.05U	.05U	.05U	.05U	.05U	.05U
delta-BHC	.05U	.05U	.05U	.05U	.05U	.05U	.05U	.05U
gamma-BHC (Lindane)	.05U	.05U	.05U	.05U	.05U	.05U	.05U	.05U
Heptachlor	.05U	.05U	.05U	.05U	.05U	.05U	.05U	.05U
Aldrin	.05U	.05U	.05U	.05U	.05U	.05U	.05U	.05U
Heptachlor epoxide	.05U	.05U	.05U	.05U	.05U	.05U	.05U	.05U
Endosulfan I	.05U	.05U	.05U	.05U	.05U	.05U	.05U	.05U
Dieldrin	.10U	.10U	.11	.10U	.10U	.10U	.10U	.10U
4,4'-DDE	.10U	.10U	.10U	.10U	.10U	.10U	.10U	.10U
Endrin	.10U	.10U	.10U	.10U	.10U	.10U	.10U	.10U
Endosulfan II	.10U	.10U	.10U	.10U	.10U	.10U	.10U	.10U
4,4'-DDD	.10U	.10U	.10U	.10U	.10U	.10U	.10U	.10U
Endosulfan sulfate	.10U	.10U	.10U	.10U	.10U	.10U	.10U	.10U
4,4'-DDT	.10U	.10U	.10U	.10U	.10U	.10U	.10U	.10U
Methoxychlor	.50U	.50U	.50U	.50U	.50U	.50U	.50U	.50U
Endrin ketone	.10U	.10U	.10U	.10U	.10U	.10U	.10U	.10U
alpha-Chlordane	.50U	.50U	.50U	.50U	.50U	.50U	.50U	.50U
gamma-Chlordane	.50U	.50U	.50U	.50U	.50U	.50U	.50U	.50U
Toxaphene	1.0U	1.0U	1.0U	1.0U	1.0U	1.0U	1.0U	1.0U
Aroclor-1016	.50U	.50U	.50U	.50U	.50U	.50U	.50U	.50U
Aroclor-1221	.50U	.50U	.50U	.50U	.50U	.50U	.50U	.50U
Aroclor-1232	.50U	.50U	.50U	.50U	.50U	.50U	.50U	.50U
Aroclor-1242	.50U	.50U	.50U	.50U	.50U	.50U	.50U	.50U
Aroclor-1248	.50U	.50U	.50U	.50U	.50U	.50U	.50U	.50U
Aroclor-1254	1.0U	1.0U	1.0U	1.0U	1.0U	1.0U	1.0U	1.0U
Aroclor-1260	1.0U	1.0U	1.0U	1.0U	1.0U	1.0U	1.0U	1.0U

PROJECT Camp Lejeune

PREPARED BY [illegible]

DATE April 1991

CHECKED BY [illegible]

DATE 5/6/91

COMMENTS

CAMP LEJEUNE - HPIA

PESTICIDES IN GROUNDWATER (SHALLOW WELLS)

Concentration in ug/l

CHART = HPPEST4 sy\wp8b\hp-pest.wr1 (4)

PESTICIDE/PCB	HPGW24-1	HPGW25	HPGW26	HPGW26D (GWDUP8)	HPGW29	21GW1	22GW1	22GW2
alpha-BHC	.05U	.05U	.05U	.05U	.05U	.05U	.05U	.05U
beta-BHC	.05U	.05U	.05U	.05U	.05U	.05U	.05U	.05U
delta-BHC	.05U	.05U	.05U	.05U	.05U	.05U	.05U	.05U
gamma-BHC (Lindane)	.05U	.05U	.05U	.05U	.05U	.05U	.05U	.05U
Heptachlor	.05U	.05U	.05U	.05U	.05U	.05U	.05U	.05U
Aldrin	.05U	.05U	.05U	.05U	.05U	.05U	.05U	.05U
Heptachlor epoxide	.05U	.05U	.05U	.05U	.05U	.05U	.05U	.05U
Endosulfan I	.05U	.05U	.05U	.05U	.05U	.05U	.05U	.05U
Dieldrin	.10U	.10U	.10U	.10U	.10U	.10U	.10U	.10U
4,4'-DDE	.10U	.10U	.10U	.10U	.10U	.10U	.10U	.10U
Endrin	.10U	.10U	.10U	.10U	.10U	.10U	.10U	.10U
Endosulfan II	.10U	.10U	.10U	.10U	.10U	.10U	.10U	.10U
4,4'-DDD	.10U	.10U	.10U	.10U	.10U	.10U	.10U	.10U
Endosulfan sulfate	.10U	.10U	.10U	.10U	.10U	.10U	.10U	.10U
4,4'-DDT	.10U	.10U	.10U	.10U	.10U	.10U	.10U	.10U
Methoxychlor	.50U	.50U	.50U	.50U	.50U	.50U	.50U	.50U
Endrin ketone	.10U	.10U	.10U	.10U	.10U	.10U	.10U	.10U
alpha-Chlordane	.50U	.50U	.50U	.50U	.50U	.50U	.50U	.50U
gamma-Chlordane	.50U	.50U	.50U	.50U	.50U	.50U	.50U	.50U
Toxaphene	1.0U	1.0U	1.0U	1.0U	1.0U	1.0U	1.0U	1.0U
Aroclor-1016	.50U	.50U	.50U	.50U	.50U	.50U	.50U	.50U
Aroclor-1221	.50U	.50U	.50U	.50U	.50U	.50U	.50U	.50U
Aroclor-1232	.50U	.50U	.50U	.50U	.50U	.50U	.50U	.50U
Aroclor-1242	.50U	.50U	.50U	.50U	.50U	.50U	.50U	.50U
Aroclor-1248	.50U	.50U	.50U	.50U	.50U	.50U	.50U	.50U
Aroclor-1254	1.0U	1.0U	1.0U	1.0U	1.0U	1.0U	1.0U	1.0U
Aroclor-1260	1.0U	1.0U	1.0U	1.0U	1.0U	1.0U	1.0U	1.0U

PROJECT Camp Lejeune

PREPARED BY Judy Figueroa

DATE April 1991

CHECKED BY [illegible]

DATE 5/6/91

COMMENTS

APPENDIX K

CHARACTERIZATION INVESTIGATION INTERMEDIATE MONITOR WELLS ANALYTICAL RESULTS

PROJECT NUMBER 86447 0406 PROJECT NAME NAVY - LEJEUNE HP4
FIELD GROUP LJHP-4 LAB COORDINATOR JEFF SHAMIS

SAMPLE ID/#

PARAMETERS	UNITS	STORET # METHOD	HPGW9-2 LJHP-4 1	HPGW17-2 LJHP-4 3	HPGW24-2 LJHP-4 5
DATE			08/06/87	08/05/87	08/06/87
TIME			11:30	16:13	13:15
BENZENE	UG/L	34030 GMS	<1.0	<1.0	<1.0
BROMODICHLOROMETHANE	UG/L	32101 GMS	<2.2	<2.2	<2.2
BROMOFORM	UG/L	32104 GMS	<4.7	<4.7	<4.7
BROMOMETHANE	UG/L	34413 GMS	<5.8	<5.8	<5.8
CARBON TETRACHLORIDE	UG/L	32102 GMS	<2.8	<2.8	<2.8
CHLOROBENZENE	UG/L	34301 GMS	<6.0	<6.0	<6.0
CHLOROETHANE	UG/L	34311 GMS	<8.2	<8.2	<8.2
2-CHLOROETHYLVINYL ETHER	UG/L	34576 GMS	<15	<15	<15
CHLOROFORM	UG/L	32106 GMS	<1.6	<1.6	<1.6
CHLOROMETHANE	UG/L	34418 GMS	<4.3	<4.3	<4.3
DIBROMOCHLOROMETHANE	UG/L	32105 GMS	<3.1	<3.1	<3.1
1,1-DICHLOROETHANE	UG/L	34496 GMS	<4.7	<4.7	<4.7
1,2-DICHLOROETHANE	UG/L	34531 GMS	<2.8	<2.8	<2.8
1,1-DICHLOROETHYLENE	UG/L	34501 GMS	<2.8	<2.8	<2.8
TRANS-1,2-DICHLORO ETHENE	UG/L	34546 GMS	<1.6	<1.6	<1.6
1,2-DICHLOROPROPANE	UG/L	34541 GMS	<6.0	<6.0	<6.0
CIS-1,3-DICHLORO PROPENE	UG/L	34704 GMS	<5.0	<5.0	<5.0
TRANS-1,3-DICHLORO PROPENE	UG/L	34699 GMS	<6.4	<6.4	<6.4
ETHYLBENZENE	UG/L	34371 GMS	<7.2	<7.2	<7.2
METHYLENE CHLORIDE	UG/L	34423 GMS	<50	<50	<50

PROJECT NUMBER 86447 0406 PROJECT NAME NAVY - LEJEUNE HP4
FIELD GROUP LJHP-4 LAB COORDINATOR JEFF SHAMIS

SAMPLE ID/#

PARAMETERS UNITS	STORET # METHOD	HPGW9-2 LJHP-4 1	HPGW17-2 LJHP-4 3	HPGW24-2 LJHP-4 5
DATE		08/06/87	08/05/87	08/06/87
TIME		11:30	16:13	13:15
1,1,2,2-TETRACHLORO ETHANE UG/L	34516 GMS	<4.1	<4.1	<4.1
TETRACHLOROETHENE UG/L	34475 GMS	<3.0	<3.0	<3.0
TOLUENE UG/L	34010 GMS	<6.0	<6.0	<6.0
1,1,1-TRICHL'ETHANE UG/L	34506 GMS	<3.8	<3.8	<3.8
1,1,2-TRICHL'ETHANE UG/L	34511 GMS	<5.0	<5.0	<5.0
TRICHLOROETHENE UG/L	39180 GMS	<1.0	<1.0	<1.0
TRICHLOROFLUORO- METHANE UG/L	34488 GMS	<3.2	<3.2	<3.2
VINYL CHLORIDE UG/L	39175 GMS	<1.0	<1.0	<1.0
ACROLEIN UG/L	34210 GMS	<100	<100	<100
ACRYLONITRILE UG/L	34215 GMS	<100	<100	<100
DICHLORODIFLUORO- METHANE UG/L	34668 GMS	<10	<10	<10
M-XYLENE UG/L	98553 GMS	<12	<12	<12
O-AND/OR-P XYLENE UG/L	98554 GMS	<12	<12	<12
METHYL ETHYL KETONE UG/L	81595 GMS	<48	<48	<48
METHYL ISOBUT'KETONE UG/L	81596 GMS	<12	<12	<12

APPENDIX L

SUPPLEMENTAL CHARACTERIZATION INVESTIGATION INTERMEDIATE MONITOR WELLS ANALYTICAL RESULTS

CAMP LEJEUNE - HPIA

VOLATILE ORGANIC COMPOUNDS IN GROUNDWATER (INTERMEDIATE WELLS)

Concentration in ug/l

CHART = HPVOL5 wp8b\hp-vol.wr1 (5)

COMPOUND	HPGW4-2	HPGW9-2	HPGW17-2	HPGW24-2	HPGW30-2	HPGW30-2D (GWDUP4)
Chloromethane	10.U	10.U	10.U	10.U	10.U	10.U
Bromomethane	10.U	10.U	10.U	10.U	10.U	10.U
Vinyl Chloride	10.U	10.U	10.U	10.U	12.	12.
Chloroethane	10.U	10.U	10.U	10.U	10.U	10.U
Methylene Chloride	1.J	5.U	5.U	5.U	5.U	5.U
Acetone	19.	10.U	10.U	10.U	7.J	10.U
Carbon Disulfide	10.	22.	14.	9.	5.U	5.U
1,1-Dichloroethene	5.U	5.U	5.U	5.U	5.U	5.U
1,1-Dichloroethane	5.U	5.U	5.U	5.U	5.U	5.U
1,2-Dichloroethene (total)	5.U	11.	1.J	5.U	12.	11.
Chloroform	5.U	5.U	5.U	5.U	5.U	5.U
1,2-Dichloroethane	5.U	5.U	5.U	5.U	5.U	5.U
2-Butanone	10.U	10.U	10.U	10.U	10.U	10.U
1,1,1-Trichloroethane	5.U	5.U	5.U	5.U	5.U	5.U
Carbon Tetrachloride	5.U	5.U	5.U	5.U	5.U	5.U
Vinyl Acetate	10.U	10.U	10.U	10.U	10.U	10.U
Bromodichloromethane	5.U	5.U	5.U	5.U	5.U	5.U
1,2-Dichloropropane	5.U	5.U	5.U	5.U	5.U	5.U
cis-1,3-Dichloropropene	5.U	5.U	5.U	5.U	5.U	5.U
Trichloroethene	5.U	5.U	5.U	5.U	5.U	5.U
Dibromochloromethane	5.U	5.U	5.U	5.U	5.U	5.U
1,1,2-Trichloroethane	5.U	5.U	5.U	5.U	5.U	5.U
Benzene	5.U	5.U	3.J	5.U	2.J	2.J
trans-1,3-Dichloropropene	5.U	5.U	5.U	5.U	5.U	5.U
Bromoform	5.U	5.U	5.U	5.U	5.U	5.U
4-Methyl-2-Pentanone	10.U	10.U	10.U	10.U	10.U	10.U
2-Hexanone	10.U	10.U	10.U	10.U	10.U	10.U
Tetrachloroethene	5.U	5.U	5.U	5.U	5.U	5.U
1,1,2,2-Tetrachloroethane	5.U	5.U	5.U	5.U	5.U	5.U
Toluene	1.J	5.U	5.U	5.U	2.J	2.J
Chlorobenzene	5.U	5.U	5.U	5.U	5.U	5.U
Ethylbenzene	5.U	5.U	5.U	5.U	.7J	.6J
Styrene	5.U	5.U	5.U	5.U	5.U	5.U
Xylene (total)	5.U	5.U	5.U	5.U	2.J	1.J

PROJECT Camp Lejeune

PREPARED BY Paul M. Finkey

DATE April 1991

REVIEWED BY Judy Lyons

DATE 5-10-91

CAMP LEJEUNE - HPIA

SEMI-VOLATILE ORGANIC COMPOUNDS IN GROUNDWATER (INTERMEDIATE WELLS)

Concentration in ug/l

CHART = HPSV5B wp8c\hp-sv.wr1 (5-B)

COMPOUND	HPGW4-2	HPGW9-2	HPGW17-2	HPGW24-2	HPGW30-2	HPGW30-2D (GWDUP4)
3-Nitroaniline	50.U	50.U	50.U	50.U	48.U	50.U
Acenaphthene	10.U	10.U	5.J	10.U	1.J	10.U
2,4-Dinitrophenol	50.U	50.U	50.U	50.U	48.U	50.U
4-Nitrophenol	50.U	50.U	50.U	50.U	48.U	50.U
Dibenzofuran	10.U	10.U	10.U	10.U	10.U	10.U
2,4-Dinitrotoluene	10.U	10.U	10.U	10.U	10.U	10.U
Diethylphthalate	10.U	10.U	10.U	10.U	10.U	10.U
4-Chlorophenyl-phenylether	10.U	10.U	10.U	10.U	10.U	10.U
Fluorene	10.U	10.U	10.U	10.U	10.U	10.U
4-Nitroaniline	50.U	50.U	50.U	50.U	48.U	50.U
4,6-Dinitro-2-methylphenol	50.U	50.U	50.U	50.U	48.U	50.U
N-Nitrosodiphenylamine	10.U	10.U	10.U	10.U	10.U	10.U
4-Bromophenyl-phenylether	10.U	10.U	10.U	10.U	10.U	10.U
Hexachlorobenzene	10.U	10.U	10.U	10.U	10.U	10.U
Pentachlorophenol	50.U	50.U	50.U	50.U	48.U	50.U
Phenanthrene	10.U	10.U	10.U	10.U	10.U	10.U
Anthracene	10.U	10.U	10.U	10.U	10.U	10.U
Di-n-butylphthalate	10.U	10.U	10.U	10.U	10.U	10.U
Fluoranthene	10.U	10.U	10.U	10.U	10.U	10.U
Pyrene	10.U	10.U	10.U	10.U	10.U	10.U
Butylbenzylphthalate	10.U	10.U	10.U	10.U	10.U	10.U
3,3'-Dichlorobenzidine	20.U	20.U	20.U	20.U	20.U	20.U
Benzo(a)anthracene	10.U	10.U	10.U	10.U	10.U	10.U
Chrysene	10.U	10.U	10.U	10.U	10.U	10.U
bis(2-Ethylhexyl)phthalate	10.U	2.J	1.J	2.J	10.U	10.U
Di-n-octylphthalate	10.U	10.U	10.U	10.U	10.U	10.U
Benzo(b)fluoranthene	10.U	10.U	10.U	10.U	10.U	10.U
Benzo(k)fluoranthene	10.U	10.U	10.U	10.U	10.U	10.U
Benzo(a)pyrene	10.U	10.U	10.U	10.U	10.U	10.U
Indeno(1,2,3-cd)pyrene	10.U	10.U	10.U	10.U	10.U	10.U
Dibenz(a,h)anthracene	10.U	10.U	10.U	10.U	10.U	10.U
Benzo(g,h,i)perylene	10.U	10.U	10.U	10.U	10.U	10.U

CAMP LEJEUNE - HPIA

SEMI-VOLATILE ORGANIC COMPOUNDS IN GROUNDWATER (INTERMEDIATE WELLS)

Concentration in ug/l

CHART = HPSV6A

wp8c\hp-sv.wr1 (6-A)

COMPOUND	HPGW31-2	HPGW32-2
Phenol	10.U	10.U
bis(2-Chloroethyl)ether	10.U	10.U
2-Chlorophenol	10.U	10.U
1,3-Dichlorobenzene	10.U	10.U
1,4-Dichlorobenzene	10.U	10.U
Benzyl Alcohol	10.U	10.U
1,2-Dichlorobenzene	10.U	10.U
2-Methylphenol	10.U	10.U
bis(2-Chloroisopropyl)ether	10.U	10.U
4-Methylphenol	10.U	10.U
N-Nitroso-di-n-propylamine	10.U	10.U
Hexachloroethane	10.U	10.U
Nitrobenzene	10.U	10.U
Isophorone	10.U	10.U
2-Nitrophenol	10.U	10.U
2,4-Dimethylphenol	10.U	10.U
Benzoic acid	50.U	50.U
bis(2-Chloroethoxy)methane	10.U	10.U
2,4-Dichlorophenol	10.U	10.U
1,2,4-Trichlorobenzene	10.U	10.U
Naphthalene	10.U	10.U
4-Chloroaniline	10.U	10.U
Hexachlorobutadiene	10.U	10.U
4-Chloro-3-methylphenol	10.U	10.U
2-Methylnaphthalene	10.U	10.U
Hexachlorocyclopentadiene	10.U	10.U
2,4,6-Trichlorophenol	10.U	10.U
2,4,5-Trichlorophenol	50.U	50.U
2-Chloronaphthalene	10.U	10.U
2-Nitroaniline	50.U	50.U
Dimethylphthalate	10.U	10.U
Acenaphthylene	10.U	10.U
2,6-Dinitrotoluene	10.U	10.U

PROJECT Camp Lejeune

PREPARED BY Judy Hume

DATE April 1991

CHECKED BY [illegible]

DATE 5/10/91

COMMENTS

CAMP LEJEUNE - HPIA

SEMI-VOLATILE ORGANIC COMPOUNDS IN GROUNDWATER (INTERMEDIATE WELLS)

Concentration in ug/l

CHART = HPSV6B wp8c\hp-sv.wr1 (6-B)

COMPOUND	HPGW31-2	HPGW32-2
3-Nitroaniline	50.U	50.U
Acenaphthene	10.U	10.U
2,4-Dinitrophenol	50.U	50.U
4-Nitrophenol	50.U	50.U
Dibenzofuran	10.U	10.U
2,4-Dinitrotoluene	10.U	10.U
Diethylphthalate	10.U	10.U
4-Chlorophenyl-phenylether	10.U	10.U
Fluorene	10.U	10.U
4-Nitroaniline	50.U	50.U
4,6-Dinitro-2-methylphenol	50.U	50.U
N-Nitrosodiphenylamine	10.U	10.U
4-Bromophenyl-phenylether	10.U	10.U
Hexachlorobenzene	10.U	10.U
Pentachlorophenol	50.U	50.U
Phenanthrene	10.U	10.U
Anthracene	10.U	10.U
Di-n-butylphthalate	10.U	10.U
Fluoranthene	10.U	10.U
Pyrene	10.U	10.U
Butylbenzylphthalate	10.U	10.U
3,3'-Dichlorobenzidine	20.U	20.U
Benzo(a)anthracene	10.U	10.U
Chrysene	10.U	10.U
bis(2-Ethylhexyl)phthalate	10.U	10.U
Di-n-octylphthalate	10.U	10.U
Benzo(b)fluoranthene	10.U	10.U
Benzo(k)fluoranthene	10.U	10.U
Benzo(a)pyrene	10.U	10.U
Indeno(1,2,3-cd)pyrene	10.U	10.U
Dibenz(a,h)anthracene	10.U	10.U
Benzo(g,h,i)perylene	10.U	10.U

CAMP LEJEUNE - HPIA

INORGANICS IN GROUNDWATER (INTERMEDIATE WELLS)

Concentration in ug/l

CHART = HPING5 wp8e\hp-inor.wr1 (5)

METAL/COMPOUND	HPGW4-2	HPGW9-2	HPGW17-2	HPGW24-2	HPGW30-2	HPGW30-2D (GWDUP4)
Aluminum	230	170B	2760	2330	1860	1830
Antimony	13.3U	22.0U	22.0U	22.0U	13.3U	13.3U
Arsenic	1.5U	1.8U	1.8U	1.8U	1.5U	1.5U
Barium	33.6B	24.2B	82.1B	22.9B	28.7B	19.0B
Beryllium	1.5U	2.1	2.1	2.1U	0.61B	0.61B
Cadmium	4.3U	4.3U	4.3U	4.3U	4.3U	4.3U
Calcium	20100	101000	190000	105000	138000	132000
Chromium	7.6B	5.2U	14.6	11.0	4.9B	7.0B
Cobalt	6.0U	6.4U	6.4U	6.4U	6.0U	6.0U
Copper	7.3B	9.3B	9.2B	8.3B	7.3B	11.2B
Iron	354	461	2920	3460	4950	4850
Lead	27.1	2.7B	8.9	13.5	5.0	6.2
Magnesium	932B	2480B	3290B	1720B	2350B	2260B
Manganese	9.2B	9.3B	35.7	29.7	51.1	49.0
Mercury	0.10U	0.10U	0.10U	0.10U	0.10U	0.10U
Nickel	5.2U	11.0U	11.0U	11.0U	5.2U	5.2U
Potassium	106000	1040B	2050B	1230B	7180	7230
Selenium	3.4U	1.6U	1.8U	1.6U	3.4U	3.4U
Silver	1.8B	6.2U	6.2U	6.2U	1.6U	1.6U
Sodium	32900	7810	9930	7710	18600	215000
Thallium	4.4U	1.1U	1.1U	1.1U	4.4U	4.4U
Vanadium	2.4U	4.3U	11.2B	10.4B	5.7B	6.1B
Zinc	104	79.9	85.7	106	44.5	61.3
Cyanide	10.0U	10.0U	10.0U	10.0U	10.0U	10.0U

PROJECT Camp Lejeune

PREPARED BY Ed Engel

DATE April 1997

CHECKED BY Judy Dunn

DATE 5-8-97

CAMP LEJEUNE - HPIA

INORGANICS IN GROUNDWATER (INTERMEDIATE WELLS)

Concentration in ug/l

CHART = HPING6

wp8e\hp-inor.wr1 (6)

METAL/COMPOUND	HPGW31-2	HPGW32-2
Aluminum	1100	322
Antimony	13.3U	13.3U
Arsenic	1.5U	1.5U
Barium	17.8B	67.3B
Beryllium	0.50U	0.50U
Cadmium	4.3U	4.3U
Calcium	68200	21500
Chromium	2.4B	11.0
Cobalt	6.0U	6.0U
Copper	12.7B	10.6B
Iron	1320	432
Lead	5.6	6.5
Magnesium	1770B	727B
Manganese	30.0	6.6B
Mercury	0.10U	0.10U
Nickel	6.9B	5.2U
Potassium	1680B	73500
Selenium	3.4U	3.4U
Silver	1.6U	2.2B
Sodium	7720	31800
Thallium	4.4U	4.4U
Vanadium	4.0B	2.4U
Zinc	46.1	62.1
Cyanide	10.0U	10.0U

PROJECT Camp Lejeune

PREPARED BY Judy Gunn

DATE April 1991

CHECKED BY E.C. Kingsley

DATE 5/13/91

APPROVED

CAMP LEJEUNE - HPIA

PESTICIDES IN GROUNDWATER (INTERMEDIATE WELLS)

Concentration in ug/l

CHART = HPPEST5 sy\wp8b\hp-pest.wr1 (5)

PESTICIDE/PCB	HPGW4-2	HPGW9-2	HPGW17-2	HPGW24-2	HPGW30-2	HPGW30-2D (GWDUP-4)
alpha-BHC	.05U	.05U	.05U	.05U	.05U	.05U
beta-BHC	.05U	.05U	.05U	.05U	.05U	.05U
delta-BHC	.05U	.05U	.05U	.05U	.05U	.05U
gamma-BHC (Lindane)	.05U	.05U	.05U	.05U	.05U	.05U
Heptachlor	.05U	.05U	.05U	.05U	.05U	.05U
Aldrin	.05U	.05U	.05U	.05U	.05U	.05U
Heptachlor epoxide	.05U	.05U	.05U	.05U	.05U	.05U
Endosulfan I	.05U	.05U	.05U	.05U	.05U	.05U
Dieldrin	.10U	.10U	.10U	.10U	.10U	.10U
4,4'-DDE	.10U	.10U	.10U	.10U	.10U	.10U
Endrin	.10U	.10U	.10U	.10U	.10U	.10U
Endosulfan II	.10U	.10U	.10U	.10U	.10U	.10U
4,4'-DDD	.10U	.10U	.10U	.10U	.10U	.10U
Endosulfan sulfate	.10U	.10U	.10U	.10U	.10U	.10U
4,4'-DDT	.10U	.10U	.10U	.10U	.10U	.10U
Methoxychlor	.50U	.50U	.50U	.50U	.50U	.50U
Endrin ketone	.10U	.10U	.10U	.10U	.10U	.10U
alpha-Chlordane	.50U	.50U	.50U	.50U	.50U	.50U
gamma-Chlordane	.50U	.50U	.50U	.50U	.50U	.50U
Toxaphene	1.0U	1.0U	1.0U	1.0U	1.0U	1.0U
Aroclor-1016	.50U	.50U	.50U	.50U	.50U	.50U
Aroclor-1221	.50U	.50U	.50U	.50U	.50U	.50U
Aroclor-1232	.50U	.50U	.50U	.50U	.50U	.50U
Aroclor-1242	.50U	.50U	.50U	.50U	.50U	.50U
Aroclor-1248	.50U	.50U	.50U	.50U	.50U	.50U
Aroclor-1254	1.0U	1.0U	1.0U	1.0U	1.0U	1.0U
Aroclor-1260	1.0U	1.0U	1.0U	1.0U	1.0U	1.0U

PROJECT Camp Lejeune

PREPARED BY Judy Yuna

DATE April 1991

CHECKED BY Mindy Layne

DATE 5/10/91

CAMP LEJEUNE - HPIA

PESTICIDES IN GROUNDWATER (INTERMEDIATE WELLS)

Concentration in ug/l

CHART = HPPEST6 sy\wp8b\hp-pest.wr1 (6)

PESTICIDE/PCB	HPGW31-2	HPGW32-2
alpha-BHC	.05U	.05U
beta-BHC	.05U	.05U
delta-BHC	.05U	.05U
gamma-BHC (Lindane)	.05U	.05U
Heptachlor	.05U	.05U
Aldrin	.05U	.05U
Heptachlor epoxide	.05U	.05U
Endosulfan I	.05U	.05U
Dieldrin	.10U	.10U
4,4'-DDE	.10U	.10U
Endrin	.10U	.10U
Endosulfan II	.10U	.10U
4,4'-DDD	.10U	.10U
Endosulfan sulfate	.10U	.10U
4,4'-DDT	.10U	.10U
Methoxychlor	.50U	.50U
Endrin ketone	.10U	.10U
alpha-Chlordane	.50U	.50U
gamma-Chlordane	.50U	.50U
Toxaphene	1.0U	1.0U
Aroclor-1016	.50U	.50U
Aroclor-1221	.50U	.50U
Aroclor-1232	.50U	.50U
Aroclor-1242	.50U	.50U
Aroclor-1248	.50U	.50U
Aroclor-1254	1.0U	1.0U
Aroclor-1260	1.0U	1.0U

PROJECT Camp Lejeune

PREPARED BY [illegible]

DATE April 1991

CHECKED BY [illegible]

DATE 5/6/91

COMMENTS

APPENDIX M

CHARACTERIZATION INVESTIGATION
DEEP MONITOR WELLS
ANALYTICAL RESULTS

PROJECT NUMBER 86447 0406 PROJECT NAME NAVY - LEJEUNE HP4
FIELD GROUP LJHP-4 LAB COORDINATOR JEFF SHAMIS

SAMPLE ID/#

PARAMETERS	STORET #	HPGW9-3 LJHP-4 2	HPGW17-3 LJHP-4 4	HPGW24-2 LJHP-4 5
UNITS	METHOD			
DATE		08/06/87	08/05/87	08/06/87
TIME		12:14	16:04	13:15
BENZENE	34030	<1.0	<1.0	<1.0
UG/L	GMS			
BROMODICHLOROMETHANE	32101	<2.2	<2.2	<2.2
UG/L	GMS			
BROMOFORM	32104	<4.7	<4.7	<4.7
UG/L	GMS			
BROMOMETHANE	34413	<5.8	<5.8	<5.8
UG/L	GMS			
CARBON TETRACHLORIDE	32102	<2.8	<2.8	<2.8
UG/L	GMS			
CHLOROBENZENE	34301	<6.0	<6.0	<6.0
UG/L	GMS			
CHLOROETHANE	34311	<8.2	<8.2	<8.2
UG/L	GMS			
2-CHLOROETHYLVINYL	34576	<15	<15	<15
ETHER UG/L	GMS			
CHLOROFORM	32106	<1.6	<1.6	<1.6
UG/L	GMS			
CHLOROMETHANE	34418	<4.3	<4.3	<4.3
UG/L	GMS			
DIBROMOCHLOROMETHANE	32105	<3.1	<3.1	<3.1
UG/L	GMS			
1,1-DICHLOROETHANE	34496	<4.7	<4.7	<4.7
UG/L	GMS			
1,2-DICHLOROETHANE	34531	<2.8	<2.8	<2.8
UG/L	GMS			
1,1-DICHLOROETHYLENE	34501	<2.8	<2.8	<2.8
UG/L	GMS			
TRANS-1,2-DICHLORO	34546	<1.6	<1.6	<1.6
ETHENE UG/L	GMS			
1,2-DICHLOROPROPANE	34541	<6.0	<6.0	<6.0
UG/L	GMS			
CIS-1,3-DICHLORO	34704	<5.0	<5.0	<5.0
PROPENE UG/L	GMS			
TRANS-1,3-DICHLORO	34699	<6.4	<6.4	<6.4
PROPENE UG/L	GMS			
ETHYLBENZENE	34371	<7.2	<7.2	<7.2
UG/L	GMS			
METHYLENE CHLORIDE	34423	<50	<50	<50
UG/L	GMS			

PROJECT NUMBER 86447 0406 PROJECT NAME NAVY - LEJEUNE HP4
FIELD GROUP LJHP-4 LAB COORDINATOR JEFF SHAMIS

SAMPLE ID/#

PARAMETERS	UNITS	STORET # METHOD	HPGW9-3 LJHP-4 2	HPGW17-3 LJHP-4 4	HPGW24-3 LJHP-4 6
DATE			08/06/87	08/05/87	08/06/87
TIME			12:14	16:04	13:28
1,1,2,2-TETRACHLORO ETHANE	UG/L	34516 GMS	<4.1	<4.1	<4.1
TETRACHLOROETHENE	UG/L	34475 GMS	<3.0	<3.0	<3.0
TOLUENE	UG/L	34010 GMS	<6.0	<6.0	<6.0
1,1,1-TRICHL'ETHANE	UG/L	34506 GMS	<3.8	<3.8	<3.8
1,1,2-TRICHL'ETHANE	UG/L	34511 GMS	<5.0	<5.0	<5.0
TRICHLOROETHENE	UG/L	39180 GMS	<1.0	<1.0	<1.0
TRICHLOROFLUORO-METHANE	UG/L	34488 GMS	<3.2	<3.2	<3.2
VINYL CHLORIDE	UG/L	39175 GMS	<1.0	<1.0	<1.0
ACROLEIN	UG/L	34210 GMS	<100	<100	<100
ACRYLONITRILE	UG/L	34215 GMS	<100	<100	<100
DICHLORODIFLUORO-METHANE	UG/L	34668 GMS	<10	<10	<10
M-XYLENE	UG/L	98553 GMS	<12	<12	<12
O-AND/OR-P XYLENE	UG/L	98554 GMS	<12	<12	<12
METHYL ETHYL KETONE	UG/L	81595 GMS	140	290	<48
METHYL ISOBUT'KETONE	UG/L	81596 GMS	<12	<12	<12

APPENDIX N

SUPPLEMENTAL CHARACTERIZATION INVESTIGATION
DEEP MONITOR WELLS
ANALYTICAL RESULTS

CAMP LEJEUNE - HPIA

VOLATILE ORGANIC COMPOUNDS IN GROUNDWATER (DEEP WELLS)

Concentration in ug/l

CHART = HPVOL7 wp8b\hp-vol.wr1 (7)

COMPOUND	HPGW4-3	HPGW9-3	HPGW9-3D (GWDUP3)	HPGW24-3	HPGW30-3	HPGW31-3	HPGW32-3
Chloromethane	10.U	10.U	10.U	10.U	10.U	10.U	10.U
Bromomethane	10.U	10.U	10.U	10.U	10.U	10.U	10.U
Vinyl Chloride	10.U	10.U	10.U	10.U	10.U	10.U	10.U
Chloroethane	10.U	10.U	10.U	10.U	10.U	10.U	10.U
Methylene Chloride	2.J	5.U	5.U	.8BJ	5.U	5.U	1.BJ
Acetone	4.J	10.U	10.U	10.U	10.U	27.B	13.
Carbon Disulfide	4.J	5.U	5.U	5.U	5.U	6.	5.U
1,1-Dichloroethene	5.U	5.U	5.U	5.U	5.U	5.U	5.U
1,1-Dichloroethane	5.U	5.U	5.U	5.U	5.U	5.U	5.U
1,2-Dichloroethene (total)	5.U	5.U	5.U	5.U	5.U	5.U	5.U
Chloroform	5.U	5.U	5.U	5.U	5.U	5.U	5.U
1,2-Dichloroethane	5.U	5.U	5.U	5.U	5.U	5.U	5.U
2-Butanone	10.U	5.J	10.U	10.U	10.U	10.U	10.U
1,1,1-Trichloroethane	5.U	5.U	5.U	5.U	5.U	5.U	5.U
Carbon Tetrachloride	5.U	5.U	5.U	5.U	5.U	5.U	5.U
Vinyl Acetate	10.U	10.U	10.U	10.U	10.U	10.U	10.U
Bromodichloromethane	5.U	5.U	5.U	5.U	5.U	5.U	5.U
1,2-Dichloropropane	5.U	5.U	5.U	5.U	5.U	5.U	5.U
cis-1,3-Dichloropropene	5.U	5.U	5.U	5.U	5.U	5.U	5.U
Trichloroethene	5.U	5.U	5.U	5.U	5.U	5.U	5.U
Dibromochloromethane	5.U	5.U	5.U	5.U	5.U	5.U	5.U
1,1,2-Trichloroethane	5.U	5.U	5.U	5.U	5.U	5.U	5.U
Benzene	5.U	5.U	5.U	5.U	5.U	5.U	5.U
trans-1,3-Dichloropropene	5.U	5.U	5.U	5.U	5.U	5.U	5.U
Bromoform	5.U	5.U	5.U	5.U	5.U	5.U	5.U
4-Methyl-2-Pentanone	10.U	10.U	10.U	10.U	10.U	10.U	10.U
2-Hexanone	10.U	10.U	10.U	10.U	10.U	10.U	10.U
Tetrachloroethene	5.U	5.U	.6J	5.U	5.U	5.U	5.U
1,1,2,2-Tetrachloroethane	5.U	5.U	5.U	5.U	5.U	5.U	5.U
Toluene	5.U	5.U	5.U	5.U	5.U	5.U	34.
Chlorobenzene	5.U	5.U	5.U	5.U	5.U	5.U	5.U
Ethylbenzene	5.U	5.U	5.U	5.U	5.U	5.U	12.
Styrene	5.U	5.U	5.U	5.U	5.U	5.U	5.U
Xylene (total)	5.U	5.U	5.U	5.U	5.U	5.U	51.

PROJECT Camp Lejeune

PREPARED BY Paul M. Parker

DATE April 1991

CHECKED BY Judy Hume

DATE 5-7-91

COMMENTS

CAMP LEJEUNE - HPIA

SEMI-VOLATILE ORGANIC COMPOUNDS IN GROUNDWATER (DEEP WELLS)

Concentration in ug/l

CHART = HPSV7A

wp8c\hp-sv.wr1 (7-A)

COMPOUND	HPGW4-3	HPGW9-3	HPGW9-3D (GWDUP3)	HPGW24-3	HPGW30-3	HPGW31-3	HPGW32-3
Phenol	10.U	10.U	10.U	10.U	10.U	10.U	10.U
bis(2-Chloroethyl)ether	10.U	10.U	10.U	10.U	10.U	10.U	10.U
2-Chlorophenol	10.U	10.U	10.U	10.U	10.U	10.U	10.U
1,3-Dichlorobenzene	10.U	10.U	10.U	10.U	10.U	10.U	10.U
1,4-Dichlorobenzene	10.U	10.U	10.U	10.U	10.U	10.U	10.U
Benzyl Alcohol	10.U	10.U	10.U	10.U	10.U	10.U	10.U
1,2-Dichlorobenzene	10.U	10.U	10.U	10.U	10.U	10.U	10.U
2-Methylphenol	10.U	10.U	10.U	10.U	10.U	10.U	10.U
bis(2-Chloroisopropyl)ether	10.U	10.U	10.U	10.U	10.U	10.U	10.U
4-Methylphenol	10.U	10.U	10.U	10.U	10.U	10.U	10.U
N-Nitroso-di-n-propylamine	10.U	10.U	10.U	10.U	10.U	10.U	10.U
Hexachloroethane	10.U	10.U	10.U	10.U	10.U	10.U	10.U
Nitrobenzene	10.U	10.U	10.U	10.U	10.U	10.U	10.U
Isophorone	10.U	10.U	10.U	10.U	10.U	10.U	10.U
2-Nitrophenol	10.U	10.U	10.U	10.U	10.U	10.U	10.U
2,4-Dimethylphenol	10.U	10.U	10.U	10.U	10.U	10.U	10.U
Benzoic acid	50.U	50.U	50.U	50.U	50.U	50.U	50.U
bis(2-Chloroethoxy)methane	10.U	10.U	10.U	10.U	10.U	10.U	10.U
2,4-Dichlorophenol	10.U	10.U	10.U	10.U	10.U	10.U	10.U
1,2,4-Trichlorobenzene	10.U	10.U	10.U	10.U	10.U	10.U	10.U
Naphthalene	10.U	10.U	10.U	10.U	10.U	10.U	10.U
4-Chloroaniline	10.U	10.U	10.U	10.U	10.U	10.U	10.U
Hexachlorobutadiene	10.U	10.U	10.U	10.U	10.U	10.U	10.U
4-Chloro-3-methylphenol	10.U	10.U	10.U	10.U	10.U	10.U	10.U
2-Methylnaphthalene	10.U	10.U	10.U	10.U	10.U	10.U	10.U
Hexachlorocyclopentadiene	10.U	10.U	10.U	10.U	10.U	10.U	10.U
2,4,6-Trichlorophenol	10.U	10.U	10.U	10.U	10.U	10.U	10.U
2,4,5-Trichlorophenol	50.U	50.U	50.U	50.U	50.U	50.U	50.U
2-Chloronaphthalene	10.U	10.U	10.U	10.U	10.U	10.U	10.U
2-Nitroaniline	50.U	50.U	50.U	50.U	50.U	50.U	50.U
Dimethylphthalate	10.U	10.U	10.U	10.U	10.U	10.U	10.U
Acenaphthylene	10.U	10.U	10.U	10.U	10.U	10.U	10.U
2,6-Dinitrotoluene	10.U	10.U	10.U	10.U	10.U	10.U	10.U

PROJECT Camp Lejeune

PREPARED BY Judy Lund

DATE April 1991

CHECKED BY Ed Kupke

DATE 5/16/91

COMMENTS

CAMP LEJEUNE - HPIA

SEMI-VOLATILE ORGANIC COMPOUNDS IN GROUNDWATER (DEEP WELLS)

Concentration in ug/l

CHART = HPSV7B wp8c\hp-sv.wr1 (7-B)

COMPOUND	HPGW4-3	HPGW9-3	HPGW9-3D (GWDUP3)	HPGW24-3	HPGW30-3	HPGW31-3	HPGW32-3
3-Nitroaniline	50.U	50.U	50.U	50.U	50.U	50.U	50.U
Acenaphthene	10.U	10.U	10.U	10.U	10.U	10.U	10.U
2,4-Dinitrophenol	50.U	50.U	50.U	50.U	50.U	50.U	50.U
4-Nitrophenol	50.U	50.U	50.U	50.U	50.U	50.U	50.U
Dibenzofuran	10.U	10.U	10.U	10.U	10.U	10.U	10.U
2,4-Dinitrotoluene	10.U	10.U	10.U	10.U	10.U	10.U	10.U
Diethylphthalate	10.U	10.U	10.U	10.U	10.U	10.U	10.U
4-Chlorophenyl-phenylether	10.U	10.U	10.U	10.U	10.U	10.U	10.U
Fluorene	10.U	10.U	10.U	10.U	10.U	10.U	10.U
4-Nitroaniline	50.U	50.U	50.U	50.U	50.U	50.U	50.U
4,6-Dinitro-2-methylphenol	50.U	50.U	50.U	50.U	50.U	50.U	50.U
N-Nitrosodiphenylamine	10.U	10.U	10.U	10.U	10.U	10.U	10.U
4-Bromophenyl-phenylether	10.U	10.U	10.U	10.U	10.U	10.U	10.U
Hexachlorobenzene	10.U	10.U	10.U	10.U	10.U	10.U	10.U
Pentachlorophenol	50.U	50.U	50.U	50.U	50.U	50.U	50.U
Phenanthrene	10.U	10.U	10.U	10.U	10.U	10.U	10.U
Anthracene	10.U	10.U	10.U	10.U	10.U	10.U	10.U
Di-n-butylphthalate	10.U	10.U	10.U	10.U	10.U	10.U	10.U
Fluoranthene	10.U	10.U	10.U	10.U	10.U	10.U	10.U
Pyrene	10.U	10.U	10.U	10.U	10.U	10.U	10.U
Butylbenzylphthalate	10.U	10.U	10.U	10.U	10.U	10.U	10.U
3,3'-Dichlorobenzidine	20.U	20.U	20.U	20.U	20.U	20.U	20.U
Benzo(a)anthracene	10.U	10.U	10.U	10.U	10.U	10.U	10.U
Chrysene	10.U	10.U	10.U	10.U	10.U	10.U	10.U
bis(2-Ethylhexyl)phthalate	10.U	3.J	10.U	2.J	10.U	10.U	10.U
Di-n-octylphthalate	10.U	10.U	10.U	10.U	10.U	10.U	10.U
Benzo(b)fluoranthene	10.U	10.U	10.U	10.U	10.U	10.U	10.U
Benzo(k)fluoranthene	10.U	10.U	10.U	10.U	10.U	10.U	10.U
Benzo(a)pyrene	10.U	10.U	10.U	10.U	10.U	10.U	10.U
Indeno(1,2,3-cd)pyrene	10.U	10.U	10.U	10.U	10.U	10.U	10.U
Dibenz(a,h)anthracene	10.U	10.U	10.U	10.U	10.U	10.U	10.U
Benzo(g,h,i)perylene	10.U	10.U	10.U	10.U	10.U	10.U	10.U

CAMP LEJEUNE - HPIA

INORGANICS IN GROUNDWATER (DEEP WELLS)

Concentration in ug/l

CHART = HPING7 wp8e\hp-inor.wr1 (7)

METAL/COMPOUND	HPGW4-3	HPGW9-3	HPGW9-3D (GWDUP3)	HPGW24-3	HPGW30-3	HPGW31-3	HPGW32-3
Aluminum	142B	2200	19000	1060	186B	105B	326
Antimony	13.5B	22.0U	22.0U	22.0U	13.3U	13.3U	13.3U
Arsenic	5.6B	1.8U	2.4B	1.8U	1.5U	1.6B	1.5U
Barium	26.8B	49.1B	88.8B	7.6B	8.7B	235	19.3B
Beryllium	0.89B	2.1U	2.1U	2.1U	0.50U	0.50U	0.50U
Cadmium	4.3U	4.3U	4.3U	4.3U	4.3U	4.3U	4.3U
Calcium	55100	120000	33200	71300	58900	55900	36100
Chromium	3.0B	5.2U	25.6	7.4B	2.5B	10.3	6.6B
Cobalt	6.0U	6.4U	8.4B	6.4U	6.0U	6.0U	6.0U
Copper	12.6B	4.6B	12.2B	6.4B	5.4B	11.4B	10.6B
Iron	23700	149	4490	2870	836	371	555
Lead	2.0B	1.0U	12.3	1.2B	1.7B	3.9	1.7U
Magnesium	2150B	131B	7700	1560B	1690B	786B	1010B
Manganese	65.4	1.8U	17.1	42.4	23.6	3.8B	15.4
Mercury	0.10U	0.10U	0.10U	0.10U	0.10U	0.10U	0.10U
Nickel	9.6B	11.0U	11.0U	11.0U	5.2U	6.0B	5.2U
Potassium	2350B	5540	2990B	1160B	1500B	63400	43200
Selenium	3.4U	1.6U	4.0B	1.6U	3.4U	3.4U	3.4U
Silver	2.5B	6.2U	6.2U	6.2U	1.6U	1.6U	1.6U
Sodium	12500	6440	7040	7390	16700	39100	21300
Thallium	4.4U	1.1U	1.1U	1.1U	4.4U	4.4U	4.4U
Vanadium	2.4U	7.3B	28.8B	6.2B	2.4U	2.4U	2.4U
Zinc	49.7	38.6	40.4	87.4	34.3	37.8	61.8
Cyanide	10.0U	10.0U	10.0U	10.0U	10.0U	10.0U	10.0U

CAMP LEJEUNE - HPIA

PESTICIDES IN GROUNDWATER (DEEP WELLS)

Concentration in ug/l

CHART = HPPEST7 sy\wp8b\hp-pest.wr1 (7)

PESTICIDE/PCB	HPGW4-3	HPGW9-3	HPGW9-3D (GWDUP3)	HPGW24-3	HPGW30-3	HPGW31-3	HPGW32-3
alpha-BHC	.05U	.05U	.05U	.05U	.05U	.05U	.05U
beta-BHC	.05U	.05U	.05U	.05U	.05U	.05U	.05U
delta-BHC	.05U	.05U	.05U	.05U	.05U	.05U	.05U
gamma-BHC (Lindane)	.05U	.05U	.05U	.05U	.05U	.05U	.05U
Heptachlor	.05U	.05U	.05U	.05U	.05U	.05U	.05U
Aldrin	.05U	.05U	.05U	.05U	.05U	.05U	.05U
Heptachlor epoxide	.05U	.05U	.05U	.05U	.05U	.05U	.05U
Endosulfan I	.05U	.05U	.05U	.05U	.05U	.05U	.05U
Dieldrin	.10U	.10U	.10U	.10U	.10U	.10U	.10U
4,4'-DDE	.10U	.10U	.10U	.10U	.10U	.10U	.10U
Endrin	.10U	.10U	.10U	.10U	.10U	.10U	.10U
Endosulfan II	.10U	.10U	.10U	.10U	.10U	.10U	.10U
4,4'-DDD	.10U	.10U	.10U	.10U	.10U	.10U	.10U
Endosulfan sulfate	.10U	.10U	.10U	.10U	.10U	.10U	.10U
4,4'-DDT	.10U	.10U	.10U	.10U	.10U	.10U	.10U
Methoxychlor	.50U	.50U	.50U	.50U	.50U	.50U	.50U
Endrin ketone	.10U	.10U	.10U	.10U	.10U	.10U	.10U
alpha-Chlordane	.50U	.50U	.50U	.50U	.50U	.50U	.50U
gamma-Chlordane	.50U	.50U	.50U	.50U	.50U	.50U	.50U
Toxaphene	1.0U	1.0U	1.0U	1.0U	1.0U	1.0U	1.0U
Aroclor-1016	.50U	.50U	.50U	.50U	.50U	.50U	.50U
Aroclor-1221	.50U	.50U	.50U	.50U	.50U	.50U	.50U
Aroclor-1232	.50U	.50U	.50U	.50U	.50U	.50U	.50U
Aroclor-1242	.50U	.50U	.50U	.50U	.50U	.50U	.50U
Aroclor-1248	.50U	.50U	.50U	.50U	.50U	.50U	.50U
Aroclor-1254	1.0U	1.0U	1.0U	1.0U	1.0U	1.0U	1.0U
Aroclor-1260	1.0U	1.0U	1.0U	1.0U	1.0U	1.0U	1.0U

PROJECT Camp Lejeune

PREPARED BY [illegible]

DATE April 1991

APPROVED BY [illegible]

DATE 5/6/91

APPENDIX O

SUPPLEMENTAL CHARACTERIZATION INVESTIGATION
WATER SUPPLY WELLS
ANALYTICAL RESULTS

CAMP LEJEUNE - HPIA

VOLATILE ORGANIC COMPOUNDS IN WATER SUPPLY WELLS

Concentration in ug/l

CHART = HPVOL8 wp8b\hp-vol.wr1 (8)

COMPOUND	WS602	WS603	WS634	WS634D (GWDUP9)	WS637	WS642	WS652	WS660
Chloromethane	10.U	10.U	10.U	10.U	10.U	10.U	10.U	10.U
Bromomethane	10.U	10.U	10.U	10.U	10.U	10.U	10.U	10.U
Vinyl Chloride	10.U	10.U	10.U	10.U	10.U	10.U	10.U	10.U
Chloroethane	10.U	10.U	10.U	10.U	10.U	10.U	10.U	10.U
Methylene Chloride	21.	5.U	5.U	5.U	5.U	5.U	20.	5.U
Acetone	10.U	10.U	10.U	10.U	10.U	10.U	10.U	10.U
Carbon Disulfide	5.U	5.U	5.U	5.U	5.U	5.U	5.U	5.U
1,1-Dichloroethene	5.U	5.U	5.U	5.U	5.U	5.U	5.U	5.U
1,1-Dichloroethane	5.U	5.U	5.U	5.U	5.U	5.U	5.U	5.U
1,2-Dichloroethene (total)	12.	5.U	1.J	5.U	5.U	5.U	5.U	2.J
Chloroform	5.U	5.U	5.U	5.U	5.U	5.U	5.U	5.U
1,2-Dichloroethane	8.	5.U	5.U	5.U	5.U	5.U	5.U	5.U
2-Butanone	10.U	10.U	10.U	10.U	10.U	10.U	10.U	10.U
1,1,1-Trichloroethane	5.U	5.U	5.U	5.U	5.U	5.U	5.U	5.U
Carbon Tetrachloride	5.U	5.U	5.U	5.U	5.U	5.U	5.U	5.U
Vinyl Acetate	10.U	10.U	10.U	10.U	10.U	10.U	10.U	10.U
Bromodichloromethane	5.U	5.U	5.U	5.U	5.U	5.U	5.U	5.U
1,2-Dichloropropane	5.U	5.U	5.U	5.U	5.U	5.U	5.U	5.U
cis-1,3-Dichloropropene	5.U	5.U	5.U	5.U	5.U	5.U	5.U	5.U
Trichloroethene	.7J	1.J	5.U	5.U	.9J	5.U	5.U	1.J
Dibromochloromethane	5.U	5.U	5.U	5.U	5.U	5.U	5.U	5.U
1,1,2-Trichloroethane	5.U	5.U	5.U	5.U	5.U	5.U	5.U	5.U
Benzene	17.	5.U	5.U	5.U	5.U	5.U	5.U	5.U
trans-1,3-Dichloropropene	5.U	5.U	5.U	5.U	5.U	5.U	5.U	5.U
Bromoform	5.U	5.U	5.U	5.U	5.U	5.U	5.U	5.U
4-Methyl-2-Pentanone	10.U	10.U	10.U	10.U	10.U	10.U	10.U	10.U
2-Hexanone	10.U	10.U	10.U	10.U	10.U	10.U	10.U	10.U
Tetrachloroethene	5.U	5.U	5.U	5.U	5.U	5.U	5.U	5.U
1,1,2,2-Tetrachloroethane	5.U	5.U	5.U	5.U	5.U	5.U	5.U	5.U
Toluene	5.U	5.U	5.U	5.U	5.U	5.U	5.U	5.U
Chlorobenzene	5.U	5.U	5.U	5.U	5.U	5.U	5.U	5.U
Ethylbenzene	5.U	5.U	5.U	5.U	5.U	5.U	5.U	5.U
Styrene	5.U	5.U	5.U	5.U	5.U	5.U	5.U	5.U
Xylene (total)	5.U	5.U	5.U	5.U	5.U	5.U	5.U	5.U

CAMP LEJEUNE - HPIA

SEMI-VOLATILE ORGANIC COMPOUNDS IN GROUNDWATER (WATER SUPPLY WELLS)

Concentration in ug/l

CHART = HPSV8A wp8c\hp-sv.wr1 (8-A)

COMPOUND	WS602	WS603	WS634	WS634D (GWDUP9)	WS637	WS642	WS652	WS660
Phenol	10.U	10.U	10.U	10.U	10.U	10.U	10.U	10.U
bis(2-Chloroethyl)ether	10.U	10.U	10.U	10.U	10.U	10.U	10.U	10.U
2-Chlorophenol	10.U	10.U	10.U	10.U	10.U	10.U	10.U	10.U
1,3-Dichlorobenzene	10.U	10.U	10.U	10.U	10.U	10.U	10.U	10.U
1,4-Dichlorobenzene	10.U	10.U	10.U	10.U	10.U	10.U	10.U	10.U
Benzyl Alcohol	10.U	10.U	10.U	10.U	10.U	10.U	10.U	10.U
1,2-Dichlorobenzene	10.U	10.U	10.U	10.U	10.U	10.U	10.U	10.U
2-Methylphenol	10.U	10.U	10.U	10.U	10.U	10.U	10.U	10.U
bis(2-Chloroisopropyl)ether	10.U	10.U	10.U	10.U	10.U	10.U	10.U	10.U
4-Methylphenol	10.U	10.U	10.U	10.U	10.U	10.U	10.U	10.U
N-Nitroso-di-n-propylamine	10.U	10.U	10.U	10.U	10.U	10.U	10.U	10.U
Hexachloroethane	10.U	10.U	10.U	10.U	10.U	10.U	10.U	10.U
Nitrobenzene	10.U	10.U	10.U	10.U	10.U	10.U	10.U	10.U
Isophorone	10.U	10.U	10.U	10.U	10.U	10.U	10.U	10.U
2-Nitrophenol	10.U	10.U	10.U	10.U	10.U	10.U	10.U	10.U
2,4-Dimethylphenol	10.U	10.U	10.U	10.U	10.U	10.U	10.U	10.U
Benzoic acid	50.U	50.U	50.U	50.U	50.U	50.U	50.U	50.U
bis(2-Chloroethoxy)methane	10.U	10.U	10.U	10.U	10.U	10.U	10.U	10.U
2,4-Dichlorophenol	10.U	10.U	10.U	10.U	10.U	10.U	10.U	10.U
1,2,4-Trichlorobenzene	10.U	10.U	10.U	10.U	10.U	10.U	10.U	10.U
Naphthalene	10.U	10.U	10.U	10.U	10.U	10.U	10.U	10.U
4-Chloroaniline	10.U	10.U	10.U	10.U	10.U	10.U	10.U	10.U
Hexachlorobutadiene	10.U	10.U	10.U	10.U	10.U	10.U	10.U	10.U
4-Chloro-3-methylphenol	10.U	10.U	10.U	10.U	10.U	10.U	10.U	10.U
2-Methylnaphthalene	10.U	10.U	10.U	10.U	10.U	10.U	10.U	10.U
Hexachlorocyclopentadiene	10.U	10.U	10.U	10.U	10.U	10.U	10.U	10.U
2,4,6-Trichlorophenol	10.U	10.U	10.U	10.U	10.U	10.U	10.U	10.U
2,4,5-Trichlorophenol	50.U	50.U	50.U	50.U	50.U	50.U	50.U	50.U
2-Chloronaphthalene	10.U	10.U	10.U	10.U	10.U	10.U	10.U	10.U
2-Nitroaniline	50.U	50.U	50.U	50.U	50.U	50.U	50.U	50.U
Dimethylphthalate	10.U	10.U	10.U	10.U	10.U	10.U	10.U	10.U
Acenaphthylene	10.U	10.U	10.U	10.U	10.U	10.U	10.U	10.U
2,6-Dinitrotoluene	10.U	10.U	10.U	10.U	10.U	10.U	10.U	10.U

CAMP LEJEUNE - HPIA

SEMI-VOLATILE ORGANIC COMPOUNDS IN GROUNDWATER (WATER SUPPLY WELLS)

Concentration in ug/l

CHART = HPSV8B

wp8c\hp-sv.wr1 (8-B)

COMPOUND	WS602	WS603	WS634	WS634D (GWDUP9)	WS637	WS642	WS652	WS660
3-Nitroaniline	50.U	50.U	50.U	50.U	50.U	50.U	50.U	50.U
Acenaphthene	10.U	10.U	10.U	10.U	10.U	10.U	10.U	10.U
2,4-Dinitrophenol	50.U	50.U	50.U	50.U	50.U	50.U	50.U	50.U
4-Nitrophenol	50.U	50.U	50.U	50.U	50.U	50.U	50.U	50.U
Dibenzofuran	10.U	10.U	10.U	10.U	10.U	10.U	10.U	10.U
2,4-Dinitrotoluene	10.U	10.U	10.U	10.U	10.U	10.U	10.U	10.U
Diethylphthalate	10.U	10.U	10.U	10.U	10.U	10.U	10.U	10.U
4-Chlorophenyl-phenylether	10.U	10.U	10.U	10.U	10.U	10.U	10.U	10.U
Fluorene	10.U	10.U	10.U	10.U	10.U	10.U	10.U	10.U
4-Nitroaniline	50.U	50.U	50.U	50.U	50.U	50.U	50.U	50.U
4,6-Dinitro-2-methylphenol	50.U	50.U	50.U	50.U	50.U	50.U	50.U	50.U
N-Nitrosodiphenylamine	10.U	10.U	10.U	10.U	10.U	10.U	10.U	10.U
4-Bromophenyl-phenylether	10.U	10.U	10.U	10.U	10.U	10.U	10.U	10.U
Hexachlorobenzene	10.U	10.U	10.U	10.U	10.U	10.U	10.U	10.U
Pentachlorophenol	50.U	50.U	50.U	50.U	50.U	50.U	50.U	50.U
Phenanthrene	10.U	10.U	10.U	10.U	10.U	10.U	10.U	10.U
Anthracene	10.U	10.U	10.U	10.U	10.U	10.U	10.U	10.U
Di-n-butylphthalate	10.U	10.U	10.U	10.U	10.U	10.U	10.U	10.U
Fluoranthene	10.U	10.U	10.U	10.U	10.U	10.U	10.U	10.U
Pyrene	10.U	10.U	10.U	10.U	10.U	10.U	10.U	10.U
Butylbenzylphthalate	10.U	10.U	10.U	10.U	10.U	10.U	10.U	10.U
3,3'-Dichlorobenzidine	20.U	20.U	20.U	20.U	20.U	20.U	20.U	20.U
Benzo(a)anthracene	10.U	10.U	10.U	10.U	10.U	10.U	10.U	10.U
Chrysene	10.U	10.U	10.U	10.U	10.U	10.U	10.U	10.U
bis(2-Ethylhexyl)phthalate	10.U	10.U	10.U	10.U	10.U	10.U	10.U	3.J
Di-n-octylphthalate	10.U	10.U	10.U	10.U	10.U	10.U	10.U	10.U
Benzo(b)fluoranthene	10.U	10.U	10.U	10.U	10.U	10.U	10.U	10.U
Benzo(k)fluoranthene	10.U	10.U	10.U	10.U	10.U	10.U	10.U	10.U
Benzo(a)pyrene	10.U	10.U	10.U	10.U	10.U	10.U	10.U	10.U
Indeno(1,2,3-cd)pyrene	10.U	10.U	10.U	10.U	10.U	10.U	10.U	10.U
Dibenz(a,h)anthracene	10.U	10.U	10.U	10.U	10.U	10.U	10.U	10.U
Benzo(g,h,i)perylene	10.U	10.U	10.U	10.U	10.U	10.U	10.U	10.U

APPENDIX P

CHARACTERIZATION INVESTIGATION
SOIL GAS LOCATIONS AND DATA

ESE
P. O. Box ESE
GAINESVILLE, FL 32602
(904) 332-3318

JOB GAS SAMPLING BUILDING 1202
SHEET NO. _____ OF _____
CALCULATED BY M. SMAR DATE 10/20/86
CHECKED BY _____ DATE _____
SCALE NOT TO SCALE

NOT TO SCALE (MEASUREMENTS TO NEAREST FOOT)

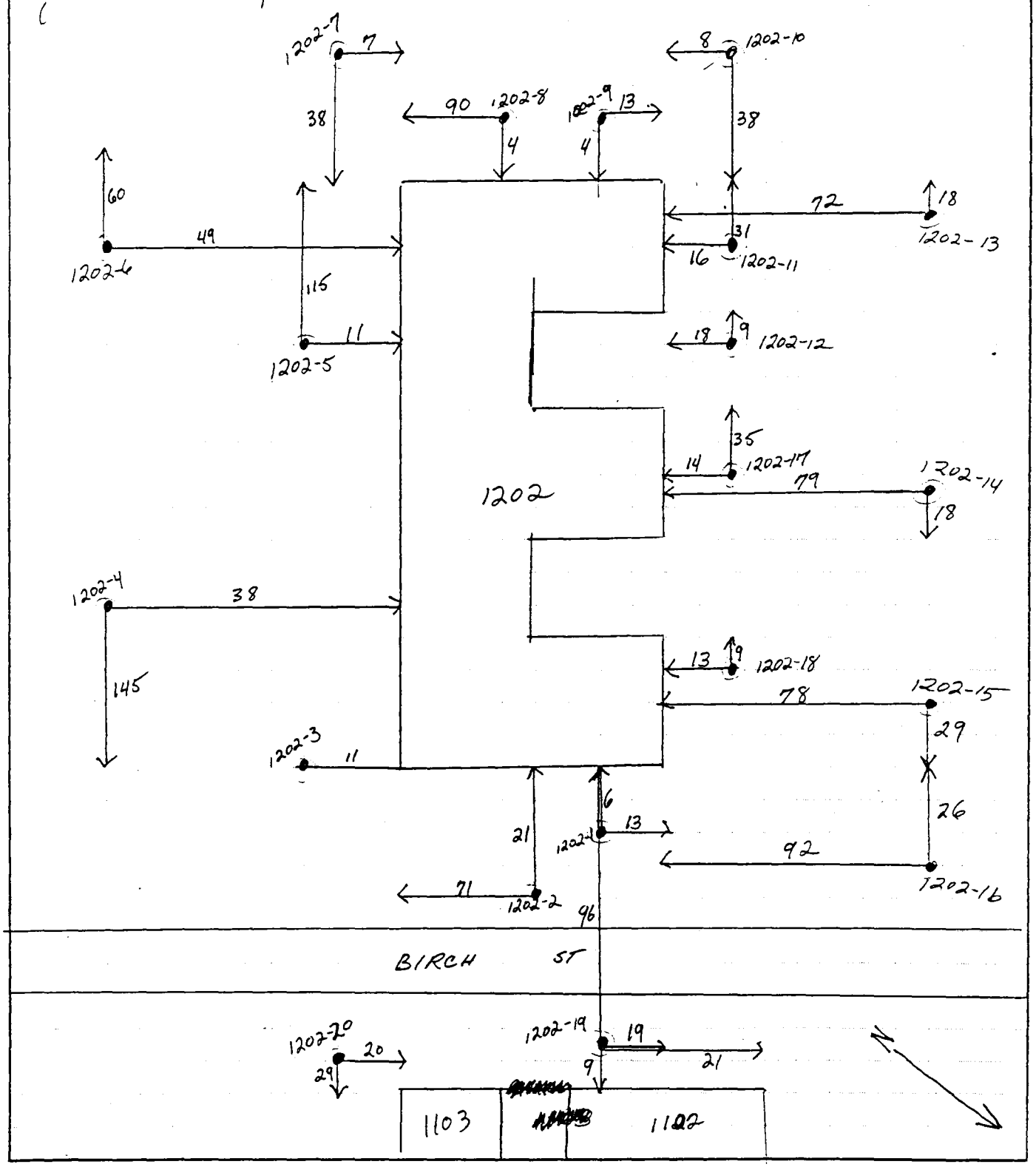

PRODUCT 204-1 NEBS Inc. Groton Mass. 01471

Table B-1. Soil Gas Data For Building 1202.

Sample ID	TCE* (nl/l)+
1202-1	<10
1202-2	53
1202-3	<10
1202-4	<10
1202-5	<10
1202-6	<10
1202-7	<10
1202-8	<10
1202-9	<10
1202-10	1760
1202-11	8200
1202-12	37
1202-13	24000
1202-14	64
1202-15	36
1202-16	15
1202-17	14700
1202-18	13200
1202-19	36770
1202-20	116

Note: * TCE = Trichloroethene
+ nl/l = nanoliter per liter (parts per billion)

Source: ESE, 1987.

ESE
P. O. Box ESE
GAINESVILLE, FL 32602
(904) 332-3318

JOB
SHEET NO. OF
CALCULATED BY DATE 10/21/86
CHECKED BY DATE
SCALE

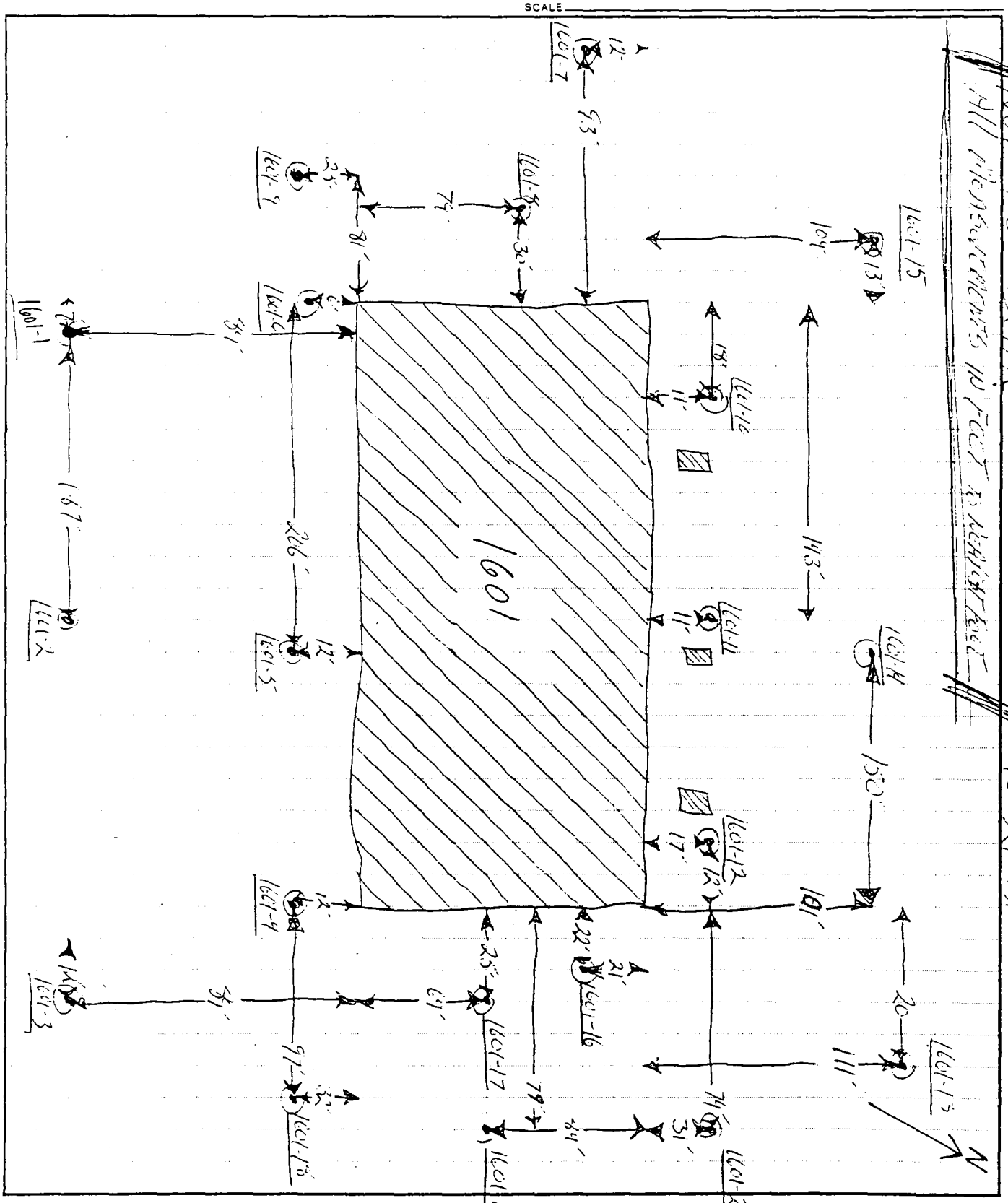

Table B-2. Soil Gas Data For Building 1601.

Sample ID	TCE* (ng/l)+
1601-1	<10
1601-2	10
1601-3	41400
1601-4	18130
1601-5	79
1601-6	33
1601-7	43
1601-8	43
1601-9	10
1601-10	<10
1601-11	<10
1601-12	2630
1601-13	10
1601-14	<10
1601-15	<10
1601-16	7440
1601-17	703000
1601-18	68000
1601-19	22450
1601-20	20

Note: * TCE = Trichloroethene
+ nl/l = nanoliter per liter (parts per billion)

Source: ESE, 1987.

ESE
P. O. Box ESE
GAINESVILLE, FL 32602
(904) 332-3318

JOB

SHEET NO. OF

CALCULATED BY M. SMAR DATE 10/22/86

CHECKED BY DATE

SCALE

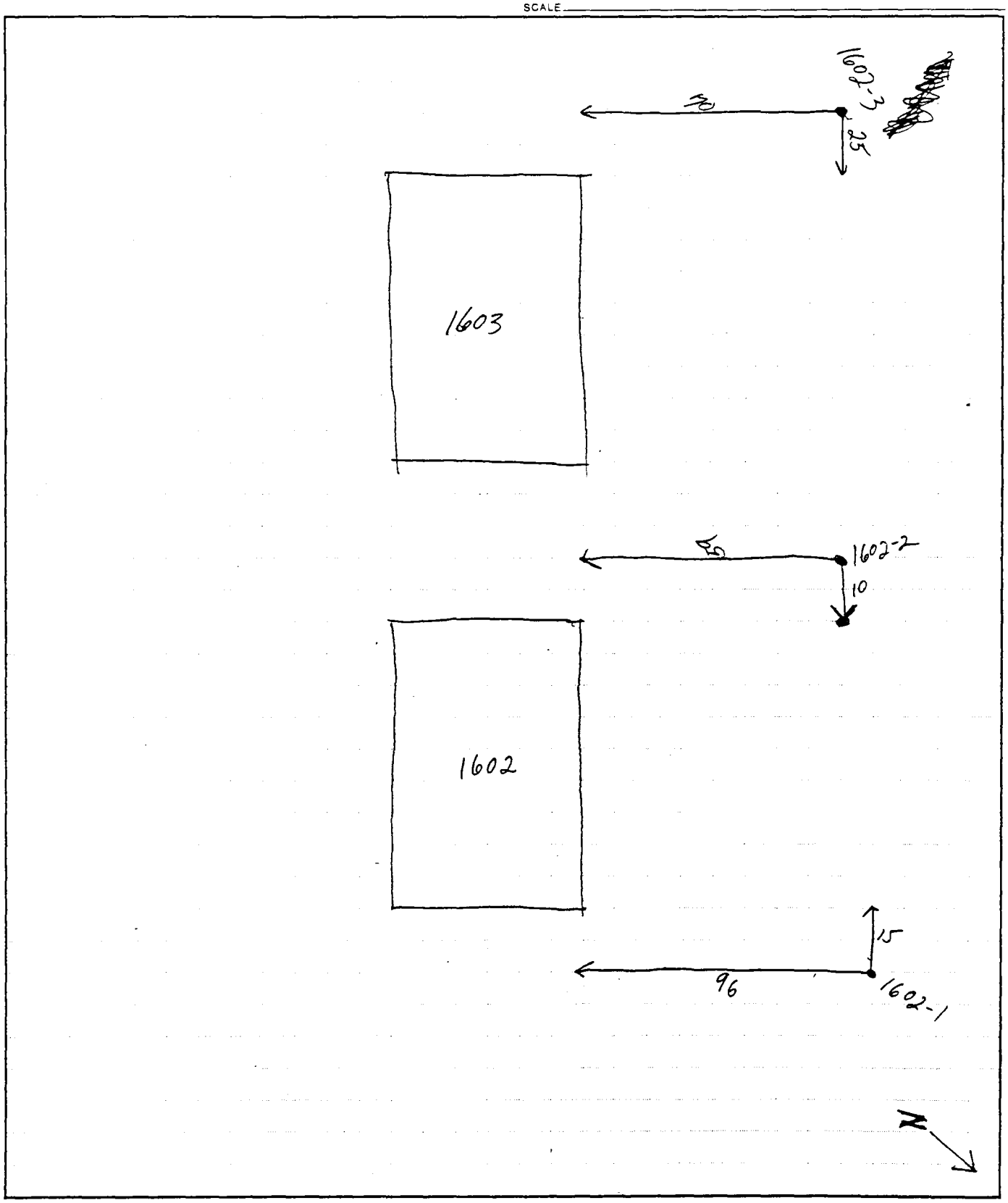

PRODUCT 204-1 NEBS Inc. Groton, Mass. 01471

ESE
P. O. Box ESE
GAINESVILLE, FL 32602
(904) 332-3318

JOB
SHEET NO. OF
CALCULATED BY M. SMAR DATE 10/22/86
CHECKED BY DATE
SCALE

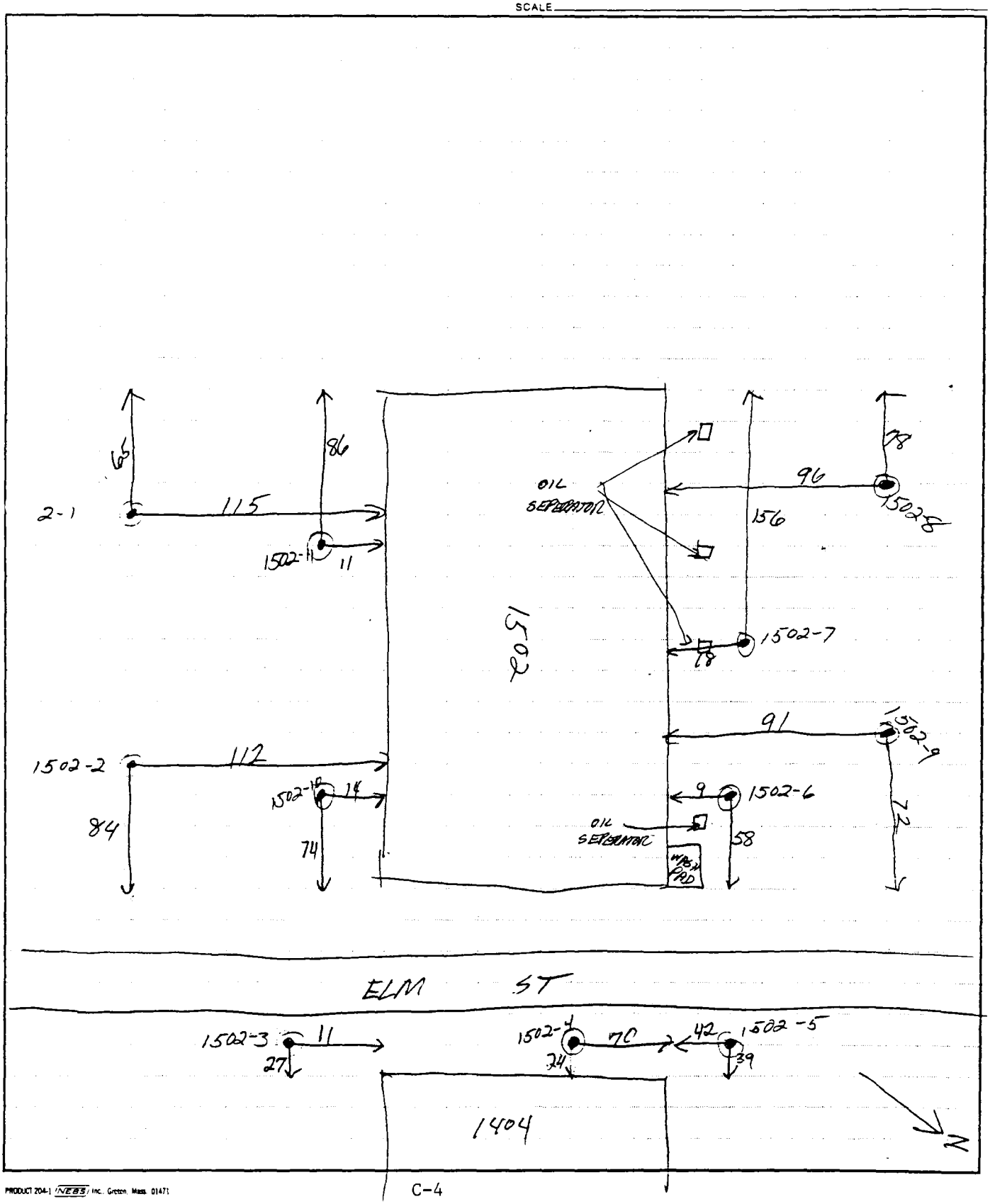

Table B-3. Soil Gas Data For Buildings 1502 and 1602.

Sample ID	TCE* (nl/l)+
1502-1	16
1502-2	33
1502-3	13
1502-4	16
1502-5	30
1502-6	<10
1502-7	10
1502-8	13
1502-9	14
1502-10	15
1502-11	<10
1602-1	29
1602-2	10
1602-3	53

Note: * TCE = Trichloroethene
+ nl/l = nanoliter per liter (parts per billion)

Source: ESE, 1987.

ESE
P. O. Box ESE
GAINESVILLE, FL 32602
(904) 332-3318

JOB 118 38
SHEET NO. _____ OF _____
CALCULATED BY _____ DATE 10/27/86
CHECKED BY _____ DATE _____
SCALE _____

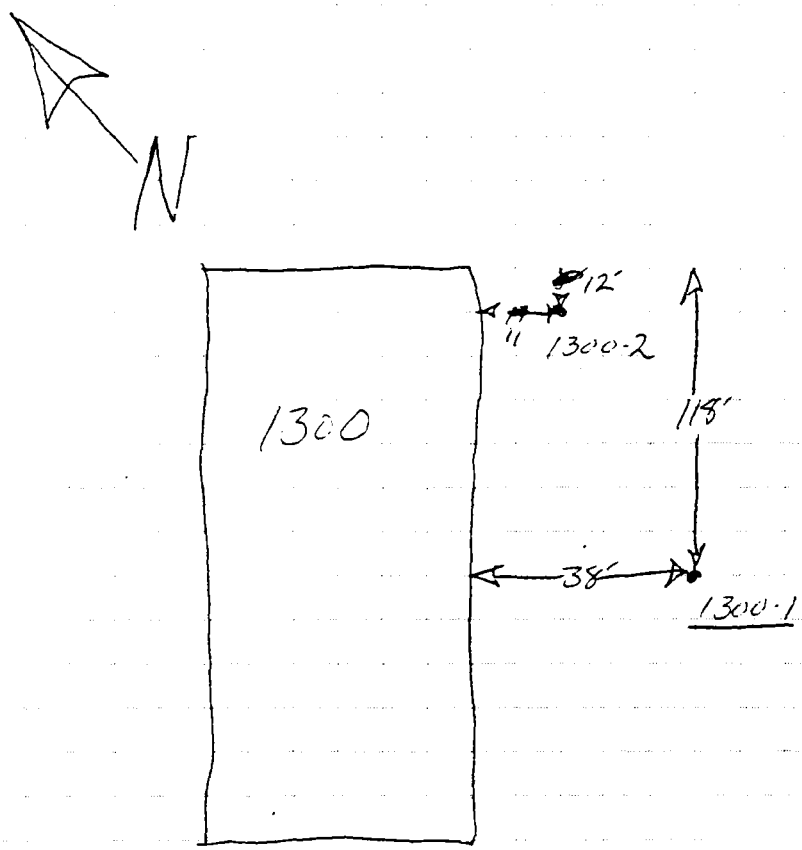

PRODUCT 204-1 NEBS Inc., Groton, Mass. 01471

ESE
P. O. Box ESE
GAINESVILLE, FL 32602
(904) 332-3318

JOB
SHEET NO. OF
CALCULATED BY M. SOMAR DATE 10/23/86
CHECKED BY DATE
SCALE

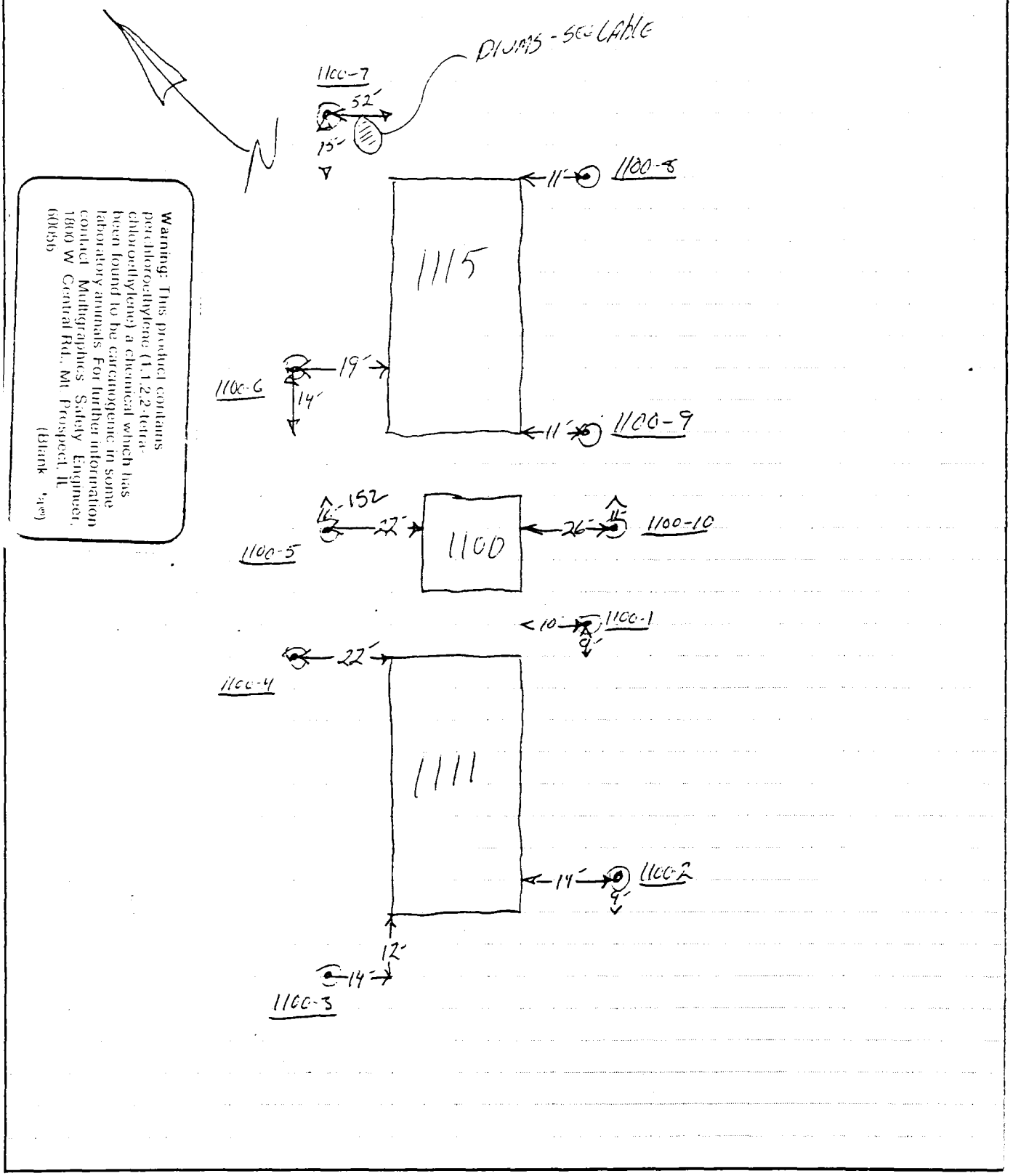

Warning: This product contains perchloroethylene (1,1,2,2-tetra-chloroethylene) a chemical which has been found to be carcinogenic in some laboratory animals. For further information contact Multigraphics Safety Engineer, 1800 W Central Rd., Mt. Prospect, IL 60056

(Blank side)

PRODUCT 204-1 NEBS Inc. Groton Mass. 01471

Table B-4. Soil Gas Data For Buildings 1300 and 1100.

Sample ID	TCE* (nl/l)+
1300-1	295
1300-2	<10
1100-1	<10
1100-2	<10
1100-3	10
1100-4	<10
1100-5	152
1100-6	<10
1100-7	<10
1100-8	<10
1100-9	<1000
1100-10	<2000

Note: * TCE = Trichloroethene
+ nl/l = nanoliter per liter (parts per billion)

Source: ESE, 1987.

ESE
P. O. Box ESE
GAINESVILLE, FL 32602
(904) 332-3318

JOB _____

SHEET NO. _____ OF _____

CALCULATED BY M. SMAR DATE 10/23/86

CHECKED BY _____ DATE _____

SCALE _____

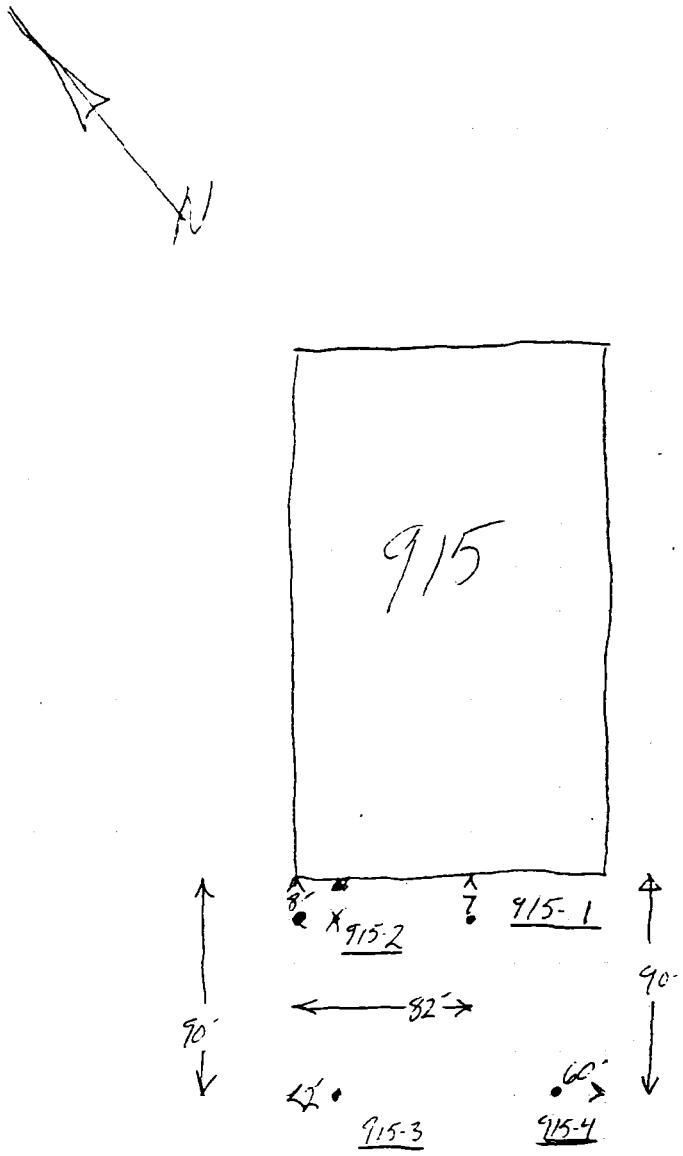

PRODUCT 204-1 NEBS Inc. Groton Mass. 01471

Table B-5. Soil Gas Data For Building 915.

Sample ID	TCE* (nl/l)+
915-1	<10
915-2	<10
915-3	<10
915-4	<10

Note: * TCE = Trichloroethene
+ nl/l = nanoliter per liter (parts per billion)

Source: ESE, 1987.

ESE
P. O. Box ESE
GAINESVILLE, FL 32602
(904) 332-3318

JOB

SHEET NO. OF

CALCULATED BY M. SMAR DATE

CHECKED BY 10/24/86 DATE

SCALE

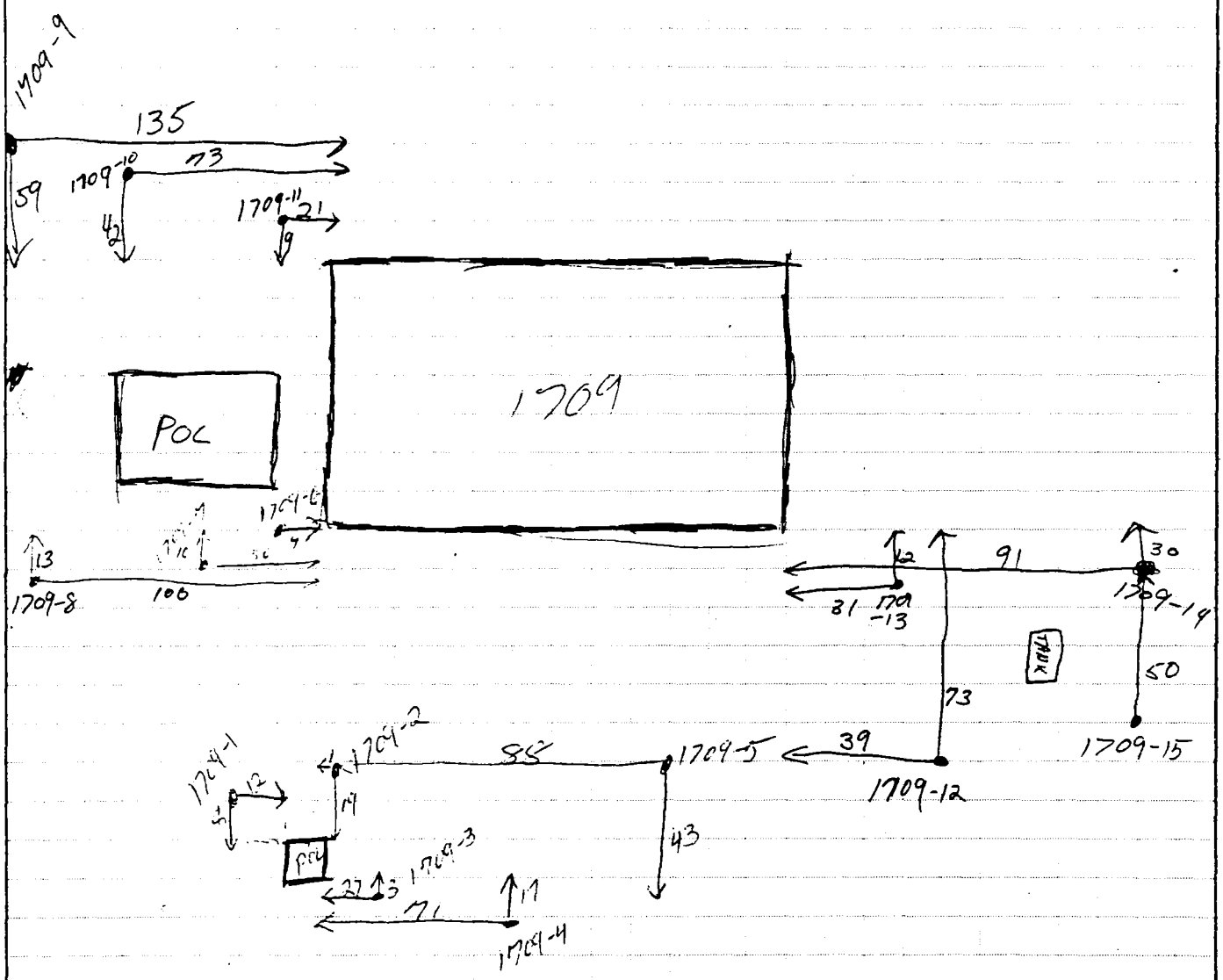

PRODUCT 204-1 NEBS Inc., Groton, Mass. 01471.

ESE
P. O. Box ESE
GAINESVILLE, FL 32602
(904) 332-3318

JOB

SHEET NO. OF

CALCULATED BY M. SMAR DATE

CHECKED BY 10/24/86 DATE

SCALE

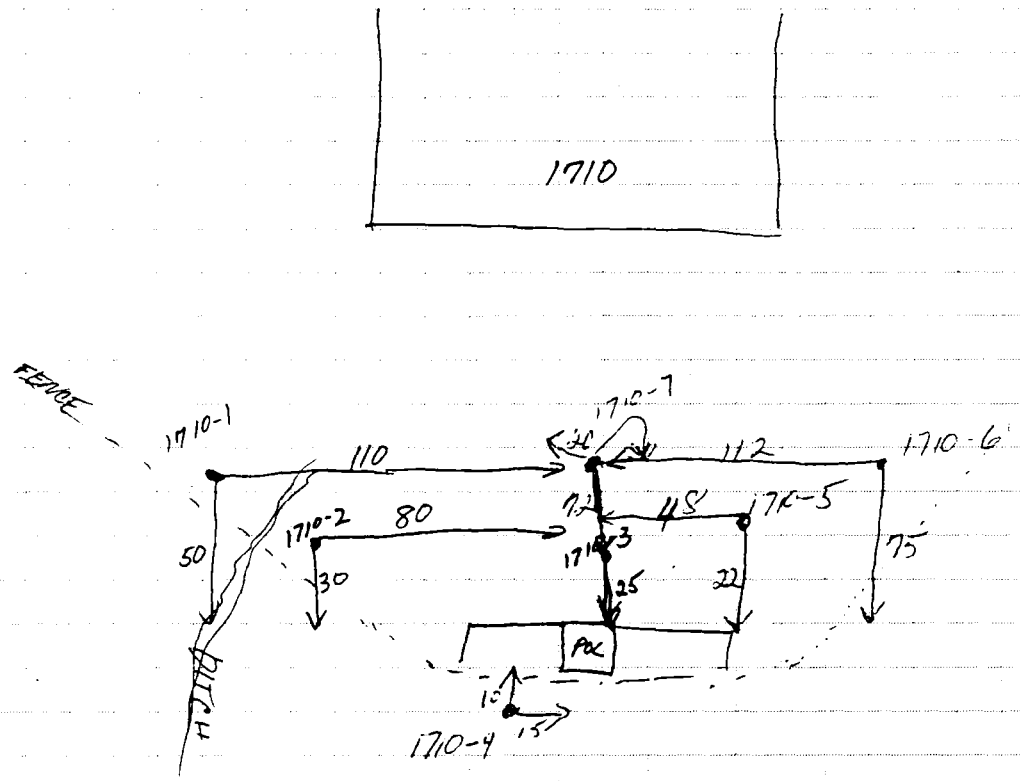

PRODUCT 204-1 NEBS Inc. Groton, Mass. 01471

Table B-6. Soil Gas Data For Buildings 1709 and 1710.

Sample ID	TCE* (nl/l)+
1709-1	<10
1709-2	35
1709-3	53000
1709-4	<10
1709-5	<10
1709-6	<10
1709-7	<100
1709-8	<10
1709-9	<1000
1709-10	<10
1709-11	<10
1709-12	<10
1709-13	<10
1709-14	<10
1709-15	<10
1710-1	<10
1710-2	<1000
1710-3	<10
1710-4	<10
1710-5	<1000
1710-6	<1000
1710-7	<100000

Note: * TCE = Trichloroethene
+ nl/l = nanoliter per liter (parts per billion)

Source: ESE, 1987.

ESE
P. O. Box ESE
GAINESVILLE, FL 32602
(904) 332-3318

JOB
SHEET NO. OF
CALCULATED BY DATE 10/27/86
CHECKED BY DATE
SCALE

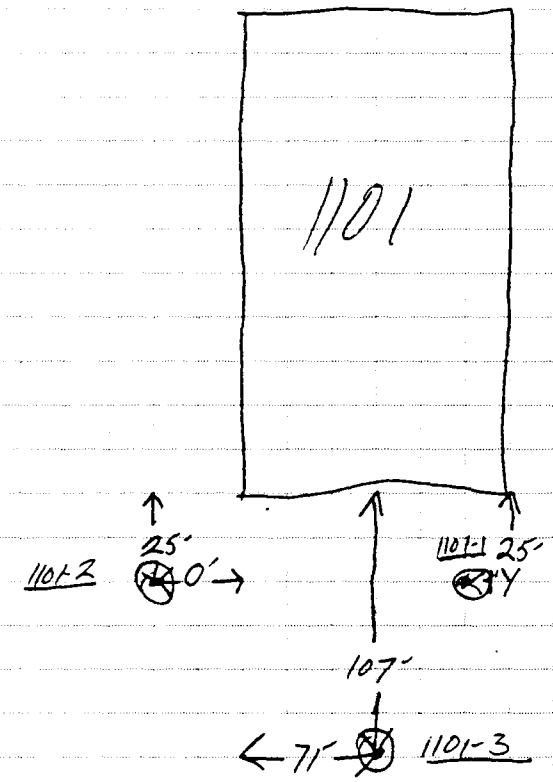

ESE
P. O. Box ESE
GAINESVILLE, FL 32602
(904) 332-3318

JOB

SHEET NO. OF

CALCULATED BY DATE 10/27/86

CHECKED BY DATE

SCALE

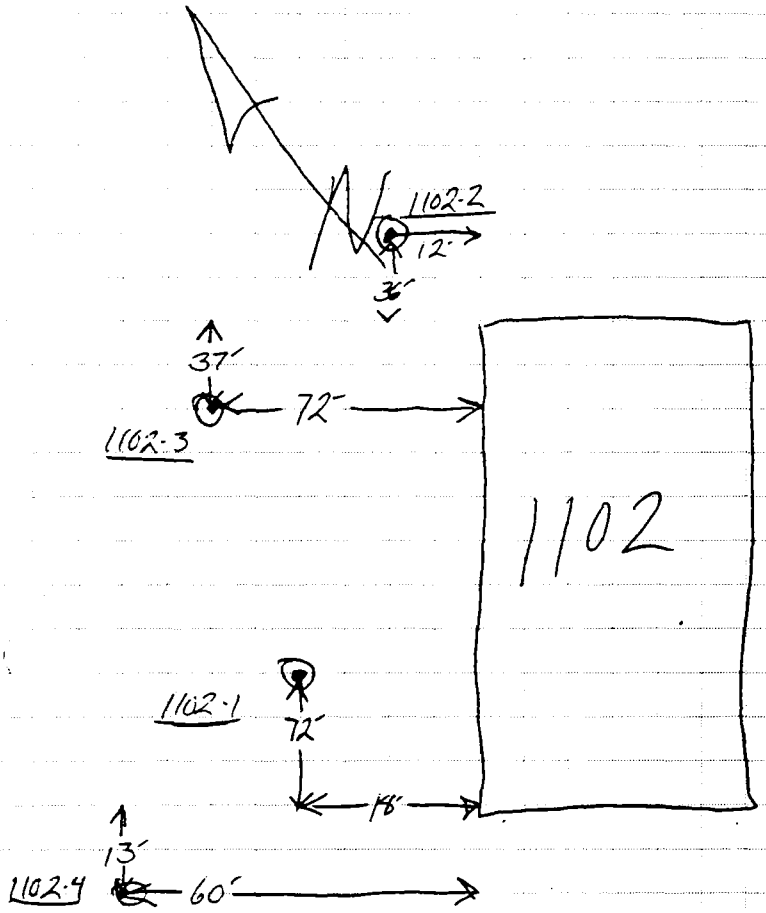

PRODUCT 204-1 NEBS Inc., Groton, Mass. 01471.

ESE
P. O. Box ESE
GAINESVILLE, FL 32602
(904) 332-3318

JOB
SHEET NO. OF
CALCULATED BY M. SAMAD DATE 10/23/86
CHECKED BY DATE
SCALE

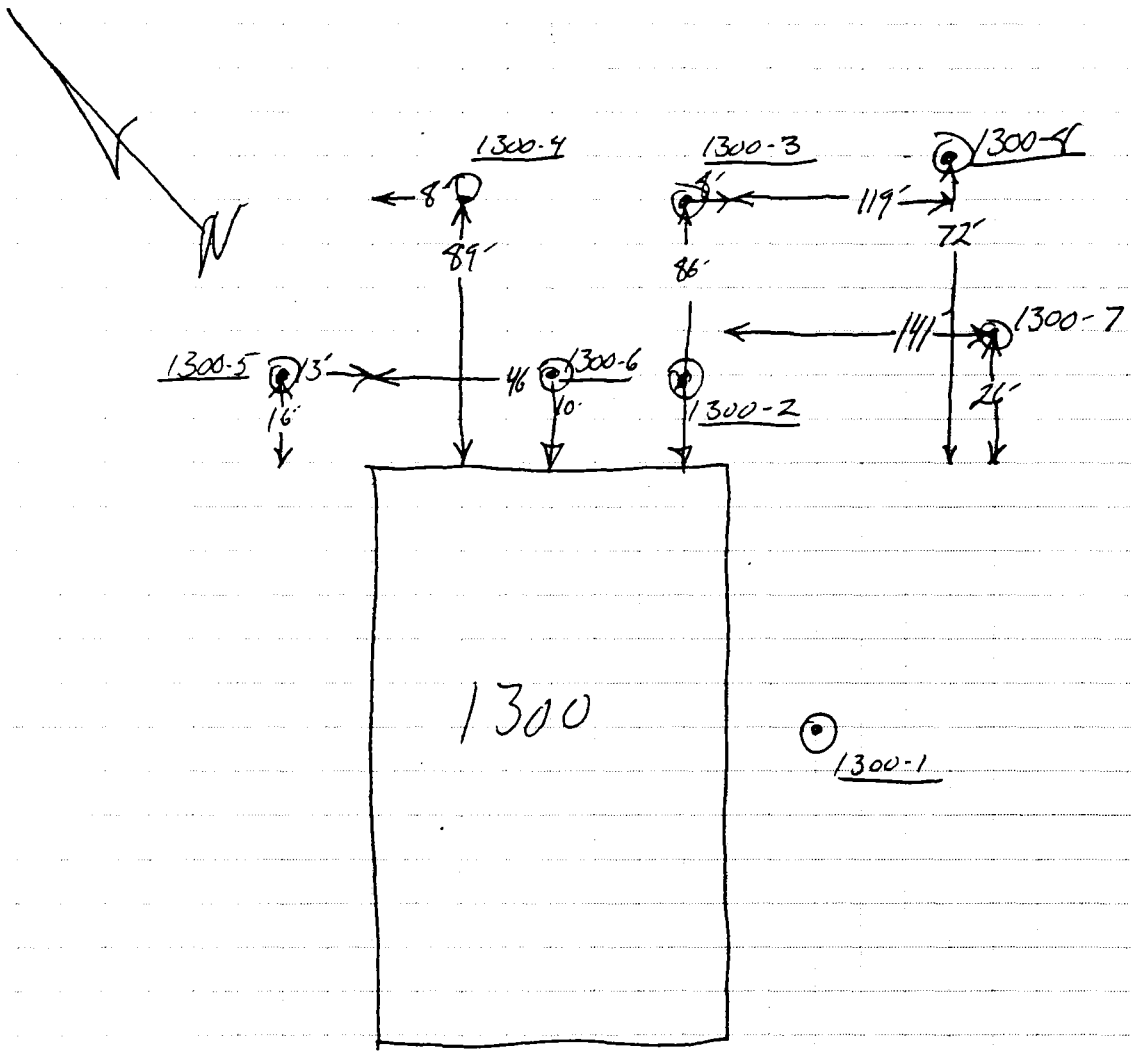

PRODUCT 204-1 NEBS Inc., Groton, Mass. 01471.

ESE
P. O. Box ESE
GAINESVILLE, FL 32602
(904) 332-3318

JOB _____
SHEET NO. _____ OF _____
CALCULATED BY _____ DATE _____
CHECKED BY _____ DATE _____
SCALE _____

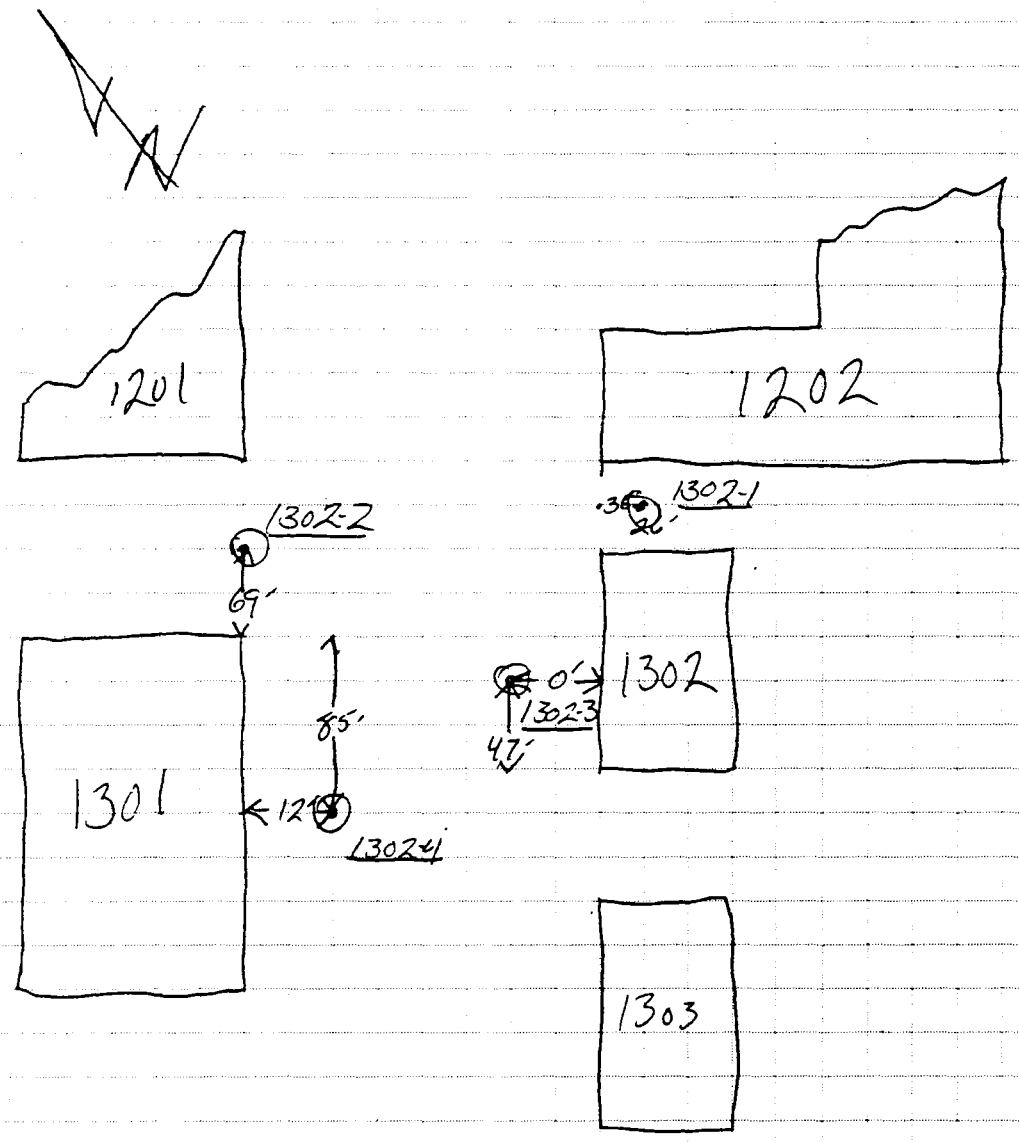

PRODUCT 234-1 NEBS Inc., Groton, Mass. 01471

Table B-7. Soil Gas Data For Buildings 1300, 1302, 1101, and 1102.

Sample ID	TCE* (nl/l)+
1300-1	295
1300-2	<10
1300-3	<10
1300-4	<10
1300-5	<10
1300-6	<10
1300-7	46
1300-8	404
1302-1	<10
1302-2	1250
1302-3	<10
1302-4	25
1101-1	<10
1101-2	<10
1101-3	<10
1102-1	442
1102-2	<10
1102-3	<10
1102-4	800

Note: * TCE = Trichloroethene
+ nl/l = nanoliter per liter (parts per billion)

Source: ESE, 1987.

APPENDIX N

SUPPLEMENTAL CHARACTERIZATION INVESTIGATION
DEEP MONITOR WELLS
ANALYTICAL RESULTS

CAMP LEJEUNE - HPIA

VOLATILE ORGANIC COMPOUNDS IN GROUNDWATER (DEEP WELLS)

Concentration in ug/l

CHART = HPVOL7 wp8b\hp-vol.wr1 (7)

COMPOUND	HPGW4-3	HPGW9-3	HPGW9-3D (GWDUP3)	HPGW24-3	HPGW30-3	HPGW31-3	HPGW32-3
Chloromethane	10.U	10.U	10.U	10.U	10.U	10.U	10.U
Bromomethane	10.U	10.U	10.U	10.U	10.U	10.U	10.U
Vinyl Chloride	10.U	10.U	10.U	10.U	10.U	10.U	10.U
Chloroethane	10.U	10.U	10.U	10.U	10.U	10.U	10.U
Methylene Chloride	2.J	5.U	5.U	.8BJ	5.U	5.U	1.BJ
Acetone	4.J	10.U	10.U	10.U	10.U	27.B	13.
Carbon Disulfide	4.J	5.U	5.U	5.U	5.U	6.	5.U
1,1-Dichloroethene	5.U	5.U	5.U	5.U	5.U	5.U	5.U
1,1-Dichloroethane	5.U	5.U	5.U	5.U	5.U	5.U	5.U
1,2-Dichloroethene (total)	5.U	5.U	5.U	5.U	5.U	5.U	5.U
Chloroform	5.U	5.U	5.U	5.U	5.U	5.U	5.U
1,2-Dichloroethane	5.U	5.U	5.U	5.U	5.U	5.U	5.U
2-Butanone	10.U	5.J	10.U	10.U	10.U	10.U	10.U
1,1,1-Trichloroethane	5.U	5.U	5.U	5.U	5.U	5.U	5.U
Carbon Tetrachloride	5.U	5.U	5.U	5.U	5.U	5.U	5.U
Vinyl Acetate	10.U	10.U	10.U	10.U	10.U	10.U	10.U
Bromodichloromethane	5.U	5.U	5.U	5.U	5.U	5.U	5.U
1,2-Dichloropropane	5.U	5.U	5.U	5.U	5.U	5.U	5.U
cis-1,3-Dichloropropene	5.U	5.U	5.U	5.U	5.U	5.U	5.U
Trichloroethene	5.U	5.U	5.U	5.U	5.U	5.U	5.U
Dibromochloromethane	5.U	5.U	5.U	5.U	5.U	5.U	5.U
1,1,2-Trichloroethane	5.U	5.U	5.U	5.U	5.U	5.U	5.U
Benzene	5.U	5.U	5.U	5.U	5.U	5.U	5.U
trans-1,3-Dichloropropene	5.U	5.U	5.U	5.U	5.U	5.U	5.U
Bromoform	5.U	5.U	5.U	5.U	5.U	5.U	5.U
4-Methyl-2-Pentanone	10.U	10.U	10.U	10.U	10.U	10.U	10.U
2-Hexanone	10.U	10.U	10.U	10.U	10.U	10.U	10.U
Tetrachloroethene	5.U	5.U	.6J	5.U	5.U	5.U	5.U
1,1,2,2-Tetrachloroethane	5.U	5.U	5.U	5.U	5.U	5.U	5.U
Toluene	5.U	5.U	5.U	5.U	5.U	5.U	34.
Chlorobenzene	5.U	5.U	5.U	5.U	5.U	5.U	5.U
Ethylbenzene	5.U	5.U	5.U	5.U	5.U	5.U	12.
Styrene	5.U	5.U	5.U	5.U	5.U	5.U	5.U
Xylene (total)	5.U	5.U	5.U	5.U	5.U	5.U	51.

PROJECT Camp Lejeune

PREPARED BY Paul M. Parker

DATE April 1991

CHECKED BY Judy Hume

DATE 5-7-91

COMMENTS

CAMP LEJEUNE - HPIA

SEMI-VOLATILE ORGANIC COMPOUNDS IN GROUNDWATER (DEEP WELLS)

Concentration in ug/l

CHART = HPSV7A

wp8c\hp-sv.wr1 (7-A)

COMPOUND	HPGW4-3	HPGW9-3	HPGW9-3D (GWDUP3)	HPGW24-3	HPGW30-3	HPGW31-3	HPGW32-3
Phenol	10.U	10.U	10.U	10.U	10.U	10.U	10.U
bis(2-Chloroethyl)ether	10.U	10.U	10.U	10.U	10.U	10.U	10.U
2-Chlorophenol	10.U	10.U	10.U	10.U	10.U	10.U	10.U
1,3-Dichlorobenzene	10.U	10.U	10.U	10.U	10.U	10.U	10.U
1,4-Dichlorobenzene	10.U	10.U	10.U	10.U	10.U	10.U	10.U
Benzyl Alcohol	10.U	10.U	10.U	10.U	10.U	10.U	10.U
1,2-Dichlorobenzene	10.U	10.U	10.U	10.U	10.U	10.U	10.U
2-Methylphenol	10.U	10.U	10.U	10.U	10.U	10.U	10.U
bis(2-Chloroisopropyl)ether	10.U	10.U	10.U	10.U	10.U	10.U	10.U
4-Methylphenol	10.U	10.U	10.U	10.U	10.U	10.U	10.U
N-Nitroso-di-n-propylamine	10.U	10.U	10.U	10.U	10.U	10.U	10.U
Hexachloroethane	10.U	10.U	10.U	10.U	10.U	10.U	10.U
Nitrobenzene	10.U	10.U	10.U	10.U	10.U	10.U	10.U
Isophorone	10.U	10.U	10.U	10.U	10.U	10.U	10.U
2-Nitrophenol	10.U	10.U	10.U	10.U	10.U	10.U	10.U
2,4-Dimethylphenol	10.U	10.U	10.U	10.U	10.U	10.U	10.U
Benzoic acid	50.U	50.U	50.U	50.U	50.U	50.U	50.U
bis(2-Chloroethoxy)methane	10.U	10.U	10.U	10.U	10.U	10.U	10.U
2,4-Dichlorophenol	10.U	10.U	10.U	10.U	10.U	10.U	10.U
1,2,4-Trichlorobenzene	10.U	10.U	10.U	10.U	10.U	10.U	10.U
Naphthalene	10.U	10.U	10.U	10.U	10.U	10.U	10.U
4-Chloroaniline	10.U	10.U	10.U	10.U	10.U	10.U	10.U
Hexachlorobutadiene	10.U	10.U	10.U	10.U	10.U	10.U	10.U
4-Chloro-3-methylphenol	10.U	10.U	10.U	10.U	10.U	10.U	10.U
2-Methylnaphthalene	10.U	10.U	10.U	10.U	10.U	10.U	10.U
Hexachlorocyclopentadiene	10.U	10.U	10.U	10.U	10.U	10.U	10.U
2,4,6-Trichlorophenol	10.U	10.U	10.U	10.U	10.U	10.U	10.U
2,4,5-Trichlorophenol	50.U	50.U	50.U	50.U	50.U	50.U	50.U
2-Chloronaphthalene	10.U	10.U	10.U	10.U	10.U	10.U	10.U
2-Nitroaniline	50.U	50.U	50.U	50.U	50.U	50.U	50.U
Dimethylphthalate	10.U	10.U	10.U	10.U	10.U	10.U	10.U
Acenaphthylene	10.U	10.U	10.U	10.U	10.U	10.U	10.U
2,6-Dinitrotoluene	10.U	10.U	10.U	10.U	10.U	10.U	10.U

PROJECT Camp Lejeune

PREPARED BY Judy Lund

DATE April 1991

CHECKED BY Ed Kupke

DATE 5/16/91

COMMENTS

CAMP LEJEUNE - HPIA

SEMI-VOLATILE ORGANIC COMPOUNDS IN GROUNDWATER (DEEP WELLS)

Concentration in ug/l

CHART = HPSV7B wp8c\hp-sv.wr1 (7-B)

COMPOUND	HPGW4-3	HPGW9-3	HPGW9-3D (GWDUP3)	HPGW24-3	HPGW30-3	HPGW31-3	HPGW32-3
3-Nitroaniline	50.U	50.U	50.U	50.U	50.U	50.U	50.U
Acenaphthene	10.U	10.U	10.U	10.U	10.U	10.U	10.U
2,4-Dinitrophenol	50.U	50.U	50.U	50.U	50.U	50.U	50.U
4-Nitrophenol	50.U	50.U	50.U	50.U	50.U	50.U	50.U
Dibenzofuran	10.U	10.U	10.U	10.U	10.U	10.U	10.U
2,4-Dinitrotoluene	10.U	10.U	10.U	10.U	10.U	10.U	10.U
Diethylphthalate	10.U	10.U	10.U	10.U	10.U	10.U	10.U
4-Chlorophenyl-phenylether	10.U	10.U	10.U	10.U	10.U	10.U	10.U
Fluorene	10.U	10.U	10.U	10.U	10.U	10.U	10.U
4-Nitroaniline	50.U	50.U	50.U	50.U	50.U	50.U	50.U
4,6-Dinitro-2-methylphenol	50.U	50.U	50.U	50.U	50.U	50.U	50.U
N-Nitrosodiphenylamine	10.U	10.U	10.U	10.U	10.U	10.U	10.U
4-Bromophenyl-phenylether	10.U	10.U	10.U	10.U	10.U	10.U	10.U
Hexachlorobenzene	10.U	10.U	10.U	10.U	10.U	10.U	10.U
Pentachlorophenol	50.U	50.U	50.U	50.U	50.U	50.U	50.U
Phenanthrene	10.U	10.U	10.U	10.U	10.U	10.U	10.U
Anthracene	10.U	10.U	10.U	10.U	10.U	10.U	10.U
Di-n-butylphthalate	10.U	10.U	10.U	10.U	10.U	10.U	10.U
Fluoranthene	10.U	10.U	10.U	10.U	10.U	10.U	10.U
Pyrene	10.U	10.U	10.U	10.U	10.U	10.U	10.U
Butylbenzylphthalate	10.U	10.U	10.U	10.U	10.U	10.U	10.U
3,3'-Dichlorobenzidine	20.U	20.U	20.U	20.U	20.U	20.U	20.U
Benzo(a)anthracene	10.U	10.U	10.U	10.U	10.U	10.U	10.U
Chrysene	10.U	10.U	10.U	10.U	10.U	10.U	10.U
bis(2-Ethylhexyl)phthalate	10.U	3.J	10.U	2.J	10.U	10.U	10.U
Di-n-octylphthalate	10.U	10.U	10.U	10.U	10.U	10.U	10.U
Benzo(b)fluoranthene	10.U	10.U	10.U	10.U	10.U	10.U	10.U
Benzo(k)fluoranthene	10.U	10.U	10.U	10.U	10.U	10.U	10.U
Benzo(a)pyrene	10.U	10.U	10.U	10.U	10.U	10.U	10.U
Indeno(1,2,3-cd)pyrene	10.U	10.U	10.U	10.U	10.U	10.U	10.U
Dibenz(a,h)anthracene	10.U	10.U	10.U	10.U	10.U	10.U	10.U
Benzo(g,h,i)perylene	10.U	10.U	10.U	10.U	10.U	10.U	10.U

CAMP LEJEUNE - HPIA

INORGANICS IN GROUNDWATER (DEEP WELLS)

Concentration in ug/l

CHART = HPING7 wp8e\hp-inor.wr1 (7)

METAL/COMPOUND	HPGW4-3	HPGW9-3	HPGW9-3D (GWDUP3)	HPGW24-3	HPGW30-3	HPGW31-3	HPGW32-3
Aluminum	142B	2200	19000	1060	186B	105B	326
Antimony	13.5B	22.0U	22.0U	22.0U	13.3U	13.3U	13.3U
Arsenic	5.6B	1.8U	2.4B	1.8U	1.5U	1.6B	1.5U
Barium	26.8B	49.1B	88.8B	7.6B	8.7B	235	19.3B
Beryllium	0.89B	2.1U	2.1U	2.1U	0.50U	0.50U	0.50U
Cadmium	4.3U	4.3U	4.3U	4.3U	4.3U	4.3U	4.3U
Calcium	55100	120000	33200	71300	58900	55900	36100
Chromium	3.0B	5.2U	25.6	7.4B	2.5B	10.3	6.6B
Cobalt	6.0U	6.4U	8.4B	6.4U	6.0U	6.0U	6.0U
Copper	12.6B	4.6B	12.2B	6.4B	5.4B	11.4B	10.6B
Iron	23700	149	4490	2870	836	371	555
Lead	2.0B	1.0U	12.3	1.2B	1.7B	3.9	1.7U
Magnesium	2150B	131B	7700	1560B	1690B	786B	1010B
Manganese	65.4	1.8U	17.1	42.4	23.6	3.8B	15.4
Mercury	0.10U	0.10U	0.10U	0.10U	0.10U	0.10U	0.10U
Nickel	9.6B	11.0U	11.0U	11.0U	5.2U	6.0B	5.2U
Potassium	2350B	5540	2990B	1160B	1500B	63400	43200
Selenium	3.4U	1.6U	4.0B	1.6U	3.4U	3.4U	3.4U
Silver	2.5B	6.2U	6.2U	6.2U	1.6U	1.6U	1.6U
Sodium	12500	6440	7040	7390	16700	39100	21300
Thallium	4.4U	1.1U	1.1U	1.1U	4.4U	4.4U	4.4U
Vanadium	2.4U	7.3B	28.8B	6.2B	2.4U	2.4U	2.4U
Zinc	49.7	38.6	40.4	87.4	34.3	37.8	61.8
Cyanide	10.0U	10.0U	10.0U	10.0U	10.0U	10.0U	10.0U

CAMP LEJEUNE - HPIA

PESTICIDES IN GROUNDWATER (DEEP WELLS)

Concentration in ug/l

CHART = HPPEST7 sy\wp8b\hp-pest.wr1 (7)

PESTICIDE/PCB	HPGW4-3	HPGW9-3	HPGW9-3D (GWDUP3)	HPGW24-3	HPGW30-3	HPGW31-3	HPGW32-3
alpha-BHC	.05U	.05U	.05U	.05U	.05U	.05U	.05U
beta-BHC	.05U	.05U	.05U	.05U	.05U	.05U	.05U
delta-BHC	.05U	.05U	.05U	.05U	.05U	.05U	.05U
gamma-BHC (Lindane)	.05U	.05U	.05U	.05U	.05U	.05U	.05U
Heptachlor	.05U	.05U	.05U	.05U	.05U	.05U	.05U
Aldrin	.05U	.05U	.05U	.05U	.05U	.05U	.05U
Heptachlor epoxide	.05U	.05U	.05U	.05U	.05U	.05U	.05U
Endosulfan I	.05U	.05U	.05U	.05U	.05U	.05U	.05U
Dieldrin	.10U	.10U	.10U	.10U	.10U	.10U	.10U
4,4'-DDE	.10U	.10U	.10U	.10U	.10U	.10U	.10U
Endrin	.10U	.10U	.10U	.10U	.10U	.10U	.10U
Endosulfan II	.10U	.10U	.10U	.10U	.10U	.10U	.10U
4,4'-DDD	.10U	.10U	.10U	.10U	.10U	.10U	.10U
Endosulfan sulfate	.10U	.10U	.10U	.10U	.10U	.10U	.10U
4,4'-DDT	.10U	.10U	.10U	.10U	.10U	.10U	.10U
Methoxychlor	.50U	.50U	.50U	.50U	.50U	.50U	.50U
Endrin ketone	.10U	.10U	.10U	.10U	.10U	.10U	.10U
alpha-Chlordane	.50U	.50U	.50U	.50U	.50U	.50U	.50U
gamma-Chlordane	.50U	.50U	.50U	.50U	.50U	.50U	.50U
Toxaphene	1.0U	1.0U	1.0U	1.0U	1.0U	1.0U	1.0U
Aroclor-1016	.50U	.50U	.50U	.50U	.50U	.50U	.50U
Aroclor-1221	.50U	.50U	.50U	.50U	.50U	.50U	.50U
Aroclor-1232	.50U	.50U	.50U	.50U	.50U	.50U	.50U
Aroclor-1242	.50U	.50U	.50U	.50U	.50U	.50U	.50U
Aroclor-1248	.50U	.50U	.50U	.50U	.50U	.50U	.50U
Aroclor-1254	1.0U	1.0U	1.0U	1.0U	1.0U	1.0U	1.0U
Aroclor-1260	1.0U	1.0U	1.0U	1.0U	1.0U	1.0U	1.0U

PROJECT Camp Lejeune

PREPARED BY [illegible]

DATE April 1991

APPROVED BY [illegible]

DATE 5/6/91

APPENDIX O

SUPPLEMENTAL CHARACTERIZATION INVESTIGATION
WATER SUPPLY WELLS
ANALYTICAL RESULTS

CAMP LEJEUNE - HPIA

VOLATILE ORGANIC COMPOUNDS IN WATER SUPPLY WELLS

Concentration in ug/l

CHART = HPVOL8 wp8b\hp-vol.wr1 (8)

COMPOUND	WS602	WS603	WS634	WS634D (GWDUP9)	WS637	WS642	WS652	WS660
Chloromethane	10.U	10.U	10.U	10.U	10.U	10.U	10.U	10.U
Bromomethane	10.U	10.U	10.U	10.U	10.U	10.U	10.U	10.U
Vinyl Chloride	10.U	10.U	10.U	10.U	10.U	10.U	10.U	10.U
Chloroethane	10.U	10.U	10.U	10.U	10.U	10.U	10.U	10.U
Methylene Chloride	21.	5.U	5.U	5.U	5.U	5.U	20.	5.U
Acetone	10.U	10.U	10.U	10.U	10.U	10.U	10.U	10.U
Carbon Disulfide	5.U	5.U	5.U	5.U	5.U	5.U	5.U	5.U
1,1-Dichloroethene	5.U	5.U	5.U	5.U	5.U	5.U	5.U	5.U
1,1-Dichloroethane	5.U	5.U	5.U	5.U	5.U	5.U	5.U	5.U
1,2-Dichloroethene (total)	12.	5.U	1.J	5.U	5.U	5.U	5.U	2.J
Chloroform	5.U	5.U	5.U	5.U	5.U	5.U	5.U	5.U
1,2-Dichloroethane	8.	5.U	5.U	5.U	5.U	5.U	5.U	5.U
2-Butanone	10.U	10.U	10.U	10.U	10.U	10.U	10.U	10.U
1,1,1-Trichloroethane	5.U	5.U	5.U	5.U	5.U	5.U	5.U	5.U
Carbon Tetrachloride	5.U	5.U	5.U	5.U	5.U	5.U	5.U	5.U
Vinyl Acetate	10.U	10.U	10.U	10.U	10.U	10.U	10.U	10.U
Bromodichloromethane	5.U	5.U	5.U	5.U	5.U	5.U	5.U	5.U
1,2-Dichloropropane	5.U	5.U	5.U	5.U	5.U	5.U	5.U	5.U
cis-1,3-Dichloropropene	5.U	5.U	5.U	5.U	5.U	5.U	5.U	5.U
Trichloroethene	.7J	1.J	5.U	5.U	.9J	5.U	5.U	1.J
Dibromochloromethane	5.U	5.U	5.U	5.U	5.U	5.U	5.U	5.U
1,1,2-Trichloroethane	5.U	5.U	5.U	5.U	5.U	5.U	5.U	5.U
Benzene	17.	5.U	5.U	5.U	5.U	5.U	5.U	5.U
trans-1,3-Dichloropropene	5.U	5.U	5.U	5.U	5.U	5.U	5.U	5.U
Bromoform	5.U	5.U	5.U	5.U	5.U	5.U	5.U	5.U
4-Methyl-2-Pentanone	10.U	10.U	10.U	10.U	10.U	10.U	10.U	10.U
2-Hexanone	10.U	10.U	10.U	10.U	10.U	10.U	10.U	10.U
Tetrachloroethene	5.U	5.U	5.U	5.U	5.U	5.U	5.U	5.U
1,1,2,2-Tetrachloroethane	5.U	5.U	5.U	5.U	5.U	5.U	5.U	5.U
Toluene	5.U	5.U	5.U	5.U	5.U	5.U	5.U	5.U
Chlorobenzene	5.U	5.U	5.U	5.U	5.U	5.U	5.U	5.U
Ethylbenzene	5.U	5.U	5.U	5.U	5.U	5.U	5.U	5.U
Styrene	5.U	5.U	5.U	5.U	5.U	5.U	5.U	5.U
Xylene (total)	5.U	5.U	5.U	5.U	5.U	5.U	5.U	5.U

CAMP LEJEUNE - HPIA

SEMI-VOLATILE ORGANIC COMPOUNDS IN GROUNDWATER (WATER SUPPLY WELLS)

Concentration in ug/l

CHART = HPSV8A wp8c\hp-sv.wr1 (8-A)

COMPOUND	WS602	WS603	WS634	WS634D (GWDUP9)	WS637	WS642	WS652	WS660
Phenol	10.U	10.U	10.U	10.U	10.U	10.U	10.U	10.U
bis(2-Chloroethyl)ether	10.U	10.U	10.U	10.U	10.U	10.U	10.U	10.U
2-Chlorophenol	10.U	10.U	10.U	10.U	10.U	10.U	10.U	10.U
1,3-Dichlorobenzene	10.U	10.U	10.U	10.U	10.U	10.U	10.U	10.U
1,4-Dichlorobenzene	10.U	10.U	10.U	10.U	10.U	10.U	10.U	10.U
Benzyl Alcohol	10.U	10.U	10.U	10.U	10.U	10.U	10.U	10.U
1,2-Dichlorobenzene	10.U	10.U	10.U	10.U	10.U	10.U	10.U	10.U
2-Methylphenol	10.U	10.U	10.U	10.U	10.U	10.U	10.U	10.U
bis(2-Chloroisopropyl)ether	10.U	10.U	10.U	10.U	10.U	10.U	10.U	10.U
4-Methylphenol	10.U	10.U	10.U	10.U	10.U	10.U	10.U	10.U
N-Nitroso-di-n-propylamine	10.U	10.U	10.U	10.U	10.U	10.U	10.U	10.U
Hexachloroethane	10.U	10.U	10.U	10.U	10.U	10.U	10.U	10.U
Nitrobenzene	10.U	10.U	10.U	10.U	10.U	10.U	10.U	10.U
Isophorone	10.U	10.U	10.U	10.U	10.U	10.U	10.U	10.U
2-Nitrophenol	10.U	10.U	10.U	10.U	10.U	10.U	10.U	10.U
2,4-Dimethylphenol	10.U	10.U	10.U	10.U	10.U	10.U	10.U	10.U
Benzoic acid	50.U	50.U	50.U	50.U	50.U	50.U	50.U	50.U
bis(2-Chloroethoxy)methane	10.U	10.U	10.U	10.U	10.U	10.U	10.U	10.U
2,4-Dichlorophenol	10.U	10.U	10.U	10.U	10.U	10.U	10.U	10.U
1,2,4-Trichlorobenzene	10.U	10.U	10.U	10.U	10.U	10.U	10.U	10.U
Naphthalene	10.U	10.U	10.U	10.U	10.U	10.U	10.U	10.U
4-Chloroaniline	10.U	10.U	10.U	10.U	10.U	10.U	10.U	10.U
Hexachlorobutadiene	10.U	10.U	10.U	10.U	10.U	10.U	10.U	10.U
4-Chloro-3-methylphenol	10.U	10.U	10.U	10.U	10.U	10.U	10.U	10.U
2-Methylnaphthalene	10.U	10.U	10.U	10.U	10.U	10.U	10.U	10.U
Hexachlorocyclopentadiene	10.U	10.U	10.U	10.U	10.U	10.U	10.U	10.U
2,4,6-Trichlorophenol	10.U	10.U	10.U	10.U	10.U	10.U	10.U	10.U
2,4,5-Trichlorophenol	50.U	50.U	50.U	50.U	50.U	50.U	50.U	50.U
2-Chloronaphthalene	10.U	10.U	10.U	10.U	10.U	10.U	10.U	10.U
2-Nitroaniline	50.U	50.U	50.U	50.U	50.U	50.U	50.U	50.U
Dimethylphthalate	10.U	10.U	10.U	10.U	10.U	10.U	10.U	10.U
Acenaphthylene	10.U	10.U	10.U	10.U	10.U	10.U	10.U	10.U
2,6-Dinitrotoluene	10.U	10.U	10.U	10.U	10.U	10.U	10.U	10.U

CAMP LEJEUNE - HPIA

SEMI-VOLATILE ORGANIC COMPOUNDS IN GROUNDWATER (WATER SUPPLY WELLS)

Concentration in ug/l

CHART = HPSV8B

wp8c\hp-sv.wr1 (8-B)

COMPOUND	WS602	WS603	WS634	WS634D (GWDUP9)	WS637	WS642	WS652	WS660
3-Nitroaniline	50.U	50.U	50.U	50.U	50.U	50.U	50.U	50.U
Acenaphthene	10.U	10.U	10.U	10.U	10.U	10.U	10.U	10.U
2,4-Dinitrophenol	50.U	50.U	50.U	50.U	50.U	50.U	50.U	50.U
4-Nitrophenol	50.U	50.U	50.U	50.U	50.U	50.U	50.U	50.U
Dibenzofuran	10.U	10.U	10.U	10.U	10.U	10.U	10.U	10.U
2,4-Dinitrotoluene	10.U	10.U	10.U	10.U	10.U	10.U	10.U	10.U
Diethylphthalate	10.U	10.U	10.U	10.U	10.U	10.U	10.U	10.U
4-Chlorophenyl-phenylether	10.U	10.U	10.U	10.U	10.U	10.U	10.U	10.U
Fluorene	10.U	10.U	10.U	10.U	10.U	10.U	10.U	10.U
4-Nitroaniline	50.U	50.U	50.U	50.U	50.U	50.U	50.U	50.U
4,6-Dinitro-2-methylphenol	50.U	50.U	50.U	50.U	50.U	50.U	50.U	50.U
N-Nitrosodiphenylamine	10.U	10.U	10.U	10.U	10.U	10.U	10.U	10.U
4-Bromophenyl-phenylether	10.U	10.U	10.U	10.U	10.U	10.U	10.U	10.U
Hexachlorobenzene	10.U	10.U	10.U	10.U	10.U	10.U	10.U	10.U
Pentachlorophenol	50.U	50.U	50.U	50.U	50.U	50.U	50.U	50.U
Phenanthrene	10.U	10.U	10.U	10.U	10.U	10.U	10.U	10.U
Anthracene	10.U	10.U	10.U	10.U	10.U	10.U	10.U	10.U
Di-n-butylphthalate	10.U	10.U	10.U	10.U	10.U	10.U	10.U	10.U
Fluoranthene	10.U	10.U	10.U	10.U	10.U	10.U	10.U	10.U
Pyrene	10.U	10.U	10.U	10.U	10.U	10.U	10.U	10.U
Butylbenzylphthalate	10.U	10.U	10.U	10.U	10.U	10.U	10.U	10.U
3,3'-Dichlorobenzidine	20.U	20.U	20.U	20.U	20.U	20.U	20.U	20.U
Benzo(a)anthracene	10.U	10.U	10.U	10.U	10.U	10.U	10.U	10.U
Chrysene	10.U	10.U	10.U	10.U	10.U	10.U	10.U	10.U
bis(2-Ethylhexyl)phthalate	10.U	10.U	10.U	10.U	10.U	10.U	10.U	3.J
Di-n-octylphthalate	10.U	10.U	10.U	10.U	10.U	10.U	10.U	10.U
Benzo(b)fluoranthene	10.U	10.U	10.U	10.U	10.U	10.U	10.U	10.U
Benzo(k)fluoranthene	10.U	10.U	10.U	10.U	10.U	10.U	10.U	10.U
Benzo(a)pyrene	10.U	10.U	10.U	10.U	10.U	10.U	10.U	10.U
Indeno(1,2,3-cd)pyrene	10.U	10.U	10.U	10.U	10.U	10.U	10.U	10.U
Dibenz(a,h)anthracene	10.U	10.U	10.U	10.U	10.U	10.U	10.U	10.U
Benzo(g,h,i)perylene	10.U	10.U	10.U	10.U	10.U	10.U	10.U	10.U

APPENDIX P

CHARACTERIZATION INVESTIGATION
SOIL GAS LOCATIONS AND DATA

ESE
P. O. Box ESE
GAINESVILLE, FL 32602
(904) 332-3318

JOB GAS SAMPLING BUILDING 1202
SHEET NO. _____ OF _____
CALCULATED BY M. SMAR DATE 10/20/86
CHECKED BY _____ DATE _____
SCALE NOT TO SCALE

NOT TO SCALE (MEASUREMENTS TO NEAREST FOOT)

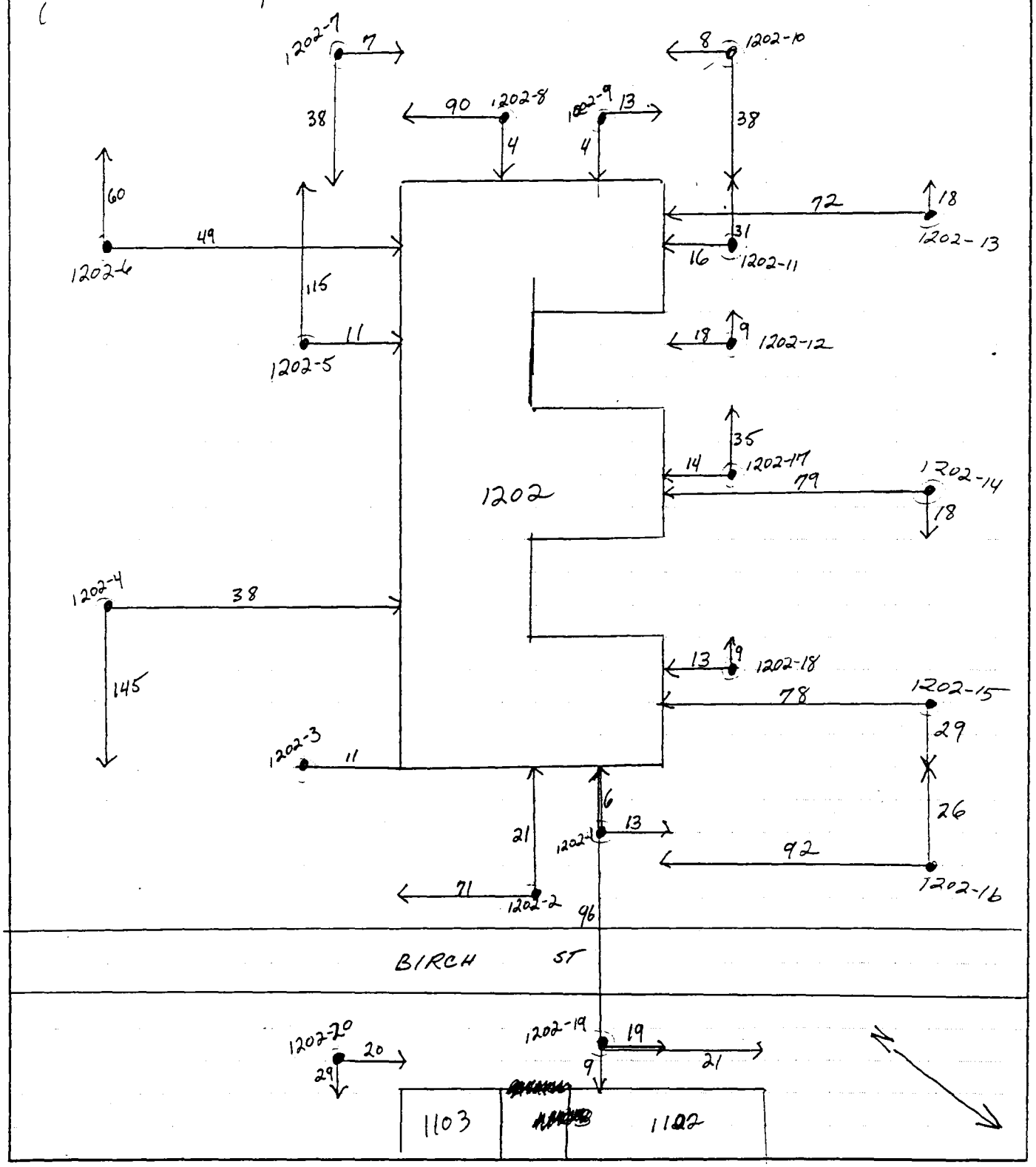

PRODUCT 204-1 NEBS Inc. Groton Mass. 01471

Table B-1. Soil Gas Data For Building 1202.

Sample ID	TCE* (nl/l)+
1202-1	<10
1202-2	53
1202-3	<10
1202-4	<10
1202-5	<10
1202-6	<10
1202-7	<10
1202-8	<10
1202-9	<10
1202-10	1760
1202-11	8200
1202-12	37
1202-13	24000
1202-14	64
1202-15	36
1202-16	15
1202-17	14700
1202-18	13200
1202-19	36770
1202-20	116

Note: * TCE = Trichloroethene
+ nl/l = nanoliter per liter (parts per billion)

Source: ESE, 1987.

ESE
P. O. Box ESE
GAINESVILLE, FL 32602
(904) 332-3318

JOB
SHEET NO. OF
CALCULATED BY DATE 10/21/86
CHECKED BY DATE
SCALE

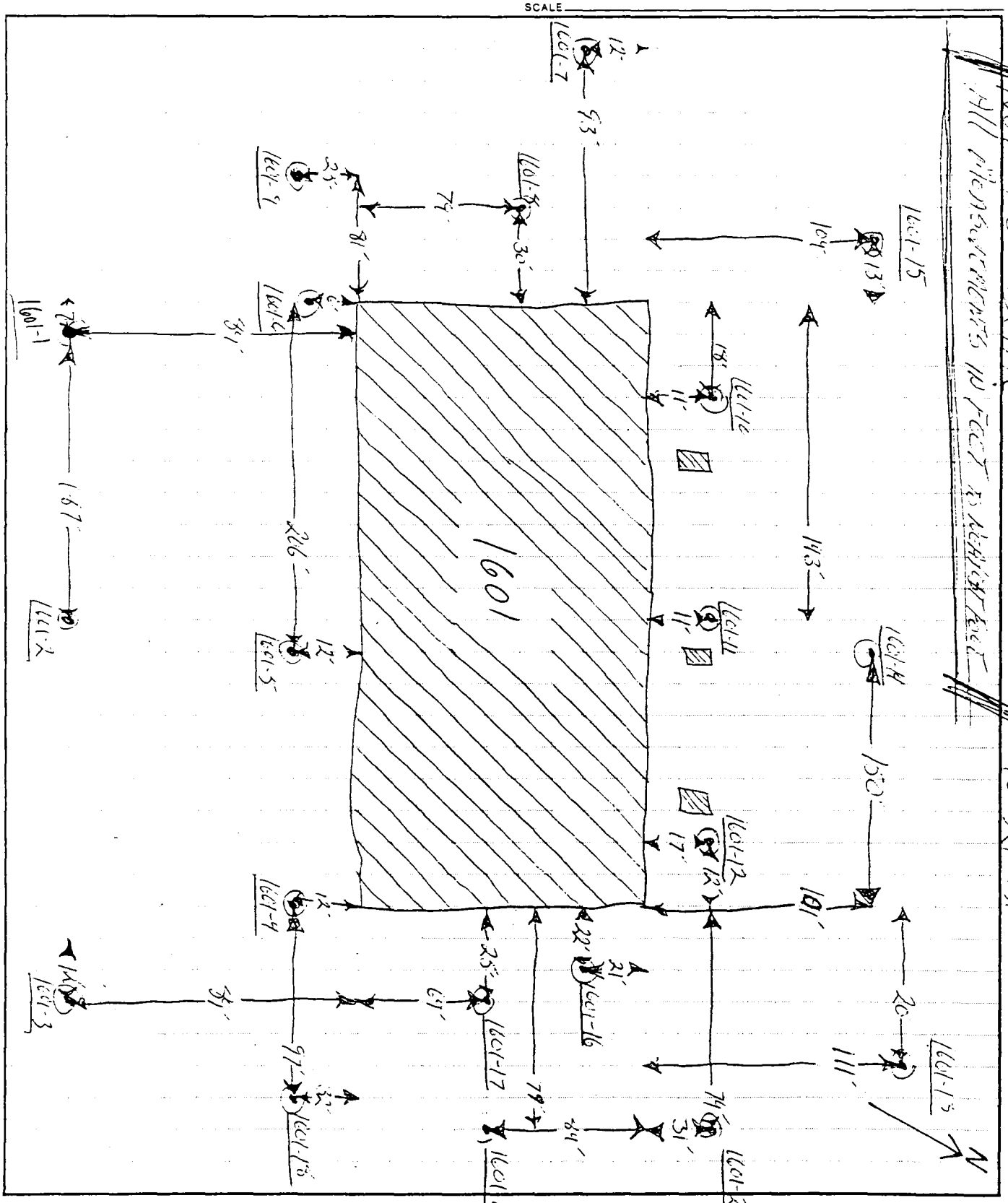

Table B-2. Soil Gas Data For Building 1601.

Sample ID	TCE* (ng/l)+
1601-1	<10
1601-2	10
1601-3	41400
1601-4	18130
1601-5	79
1601-6	33
1601-7	43
1601-8	43
1601-9	10
1601-10	<10
1601-11	<10
1601-12	2630
1601-13	10
1601-14	<10
1601-15	<10
1601-16	7440
1601-17	703000
1601-18	68000
1601-19	22450
1601-20	20

Note: * TCE = Trichloroethene
+ nl/l = nanoliter per liter (parts per billion)

Source: ESE, 1987.

ESE
P. O. Box ESE
GAINESVILLE, FL 32602
(904) 332-3318

JOB

SHEET NO. OF

CALCULATED BY M. SMAR DATE 10/22/86

CHECKED BY DATE

SCALE

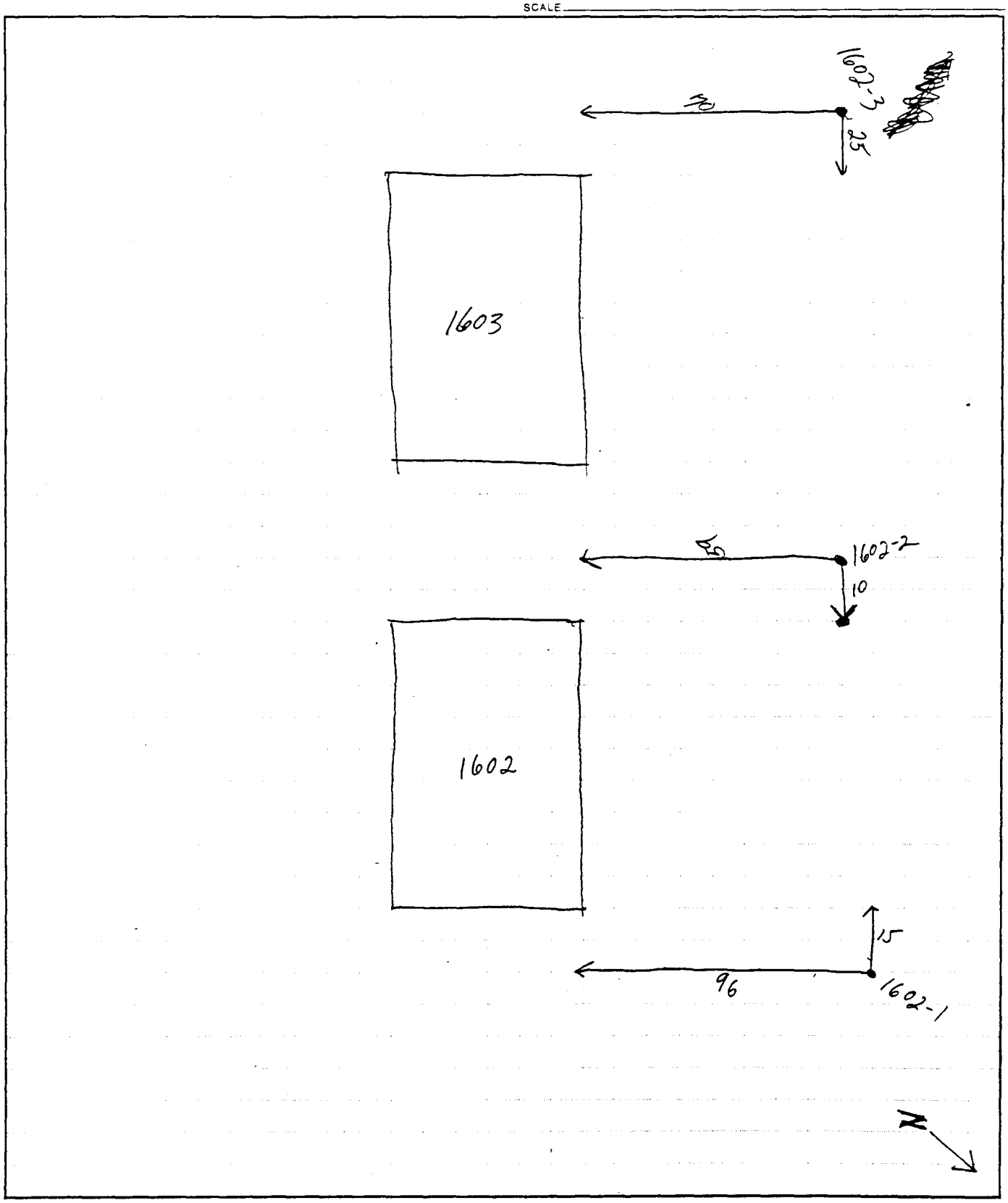

PRODUCT 204-1 NEBS Inc. Groton, Mass. 01471

ESE
P. O. Box ESE
GAINESVILLE, FL 32602
(904) 332-3318

JOB
SHEET NO. OF
CALCULATED BY M. SMAR DATE 10/22/86
CHECKED BY DATE
SCALE

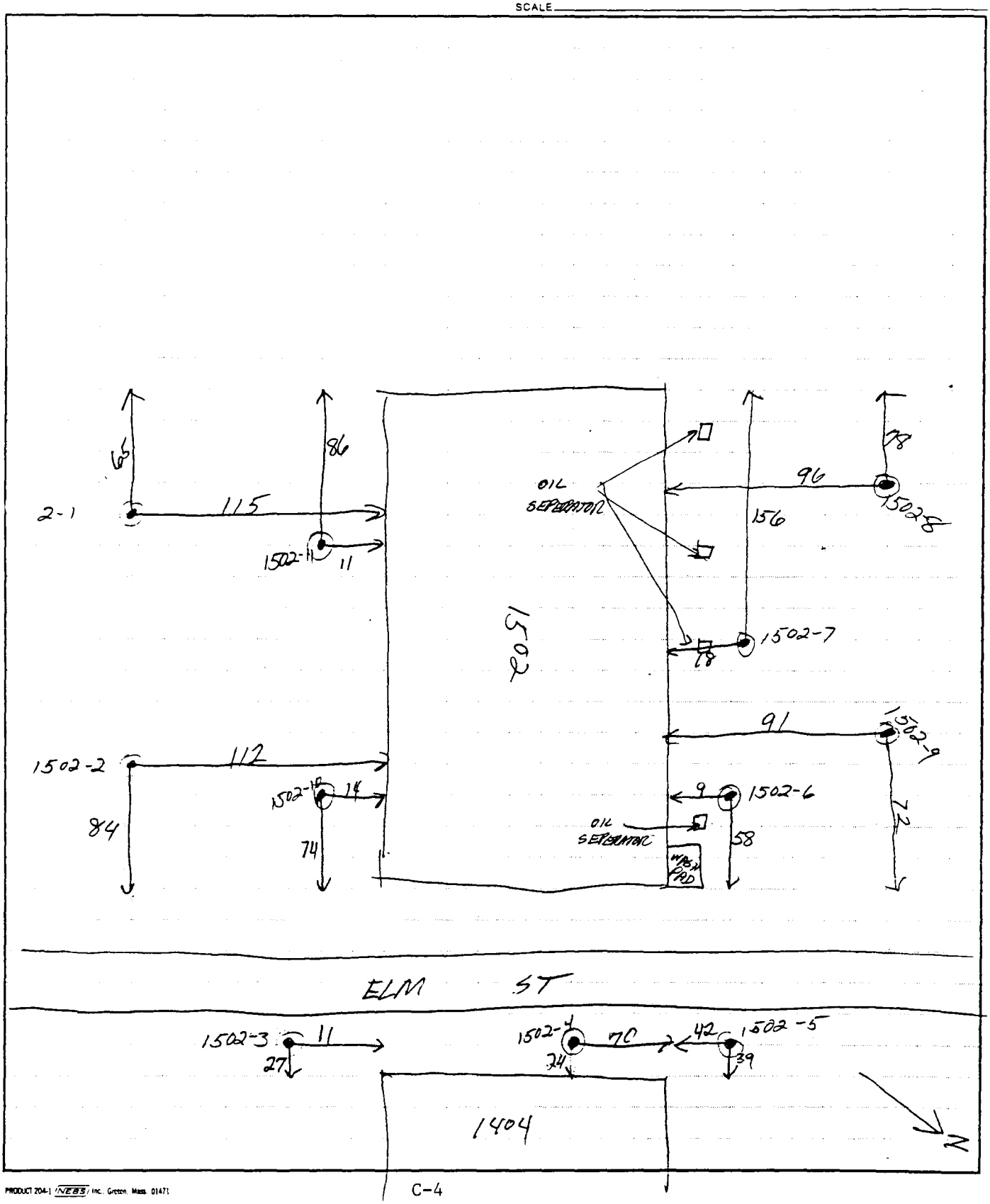

Table B-3. Soil Gas Data For Buildings 1502 and 1602.

Sample ID	TCE* (nl/l)+
1502-1	16
1502-2	33
1502-3	13
1502-4	16
1502-5	30
1502-6	<10
1502-7	10
1502-8	13
1502-9	14
1502-10	15
1502-11	<10
1602-1	29
1602-2	10
1602-3	53

Note: * TCE = Trichloroethene
+ nl/l = nanoliter per liter (parts per billion)

Source: ESE, 1987.

ESE
P. O. Box ESE
GAINESVILLE, FL 32602
(904) 332-3318

JOB 118 38
SHEET NO. _____ OF _____
CALCULATED BY _____ DATE 10/27/86
CHECKED BY _____ DATE _____
SCALE _____

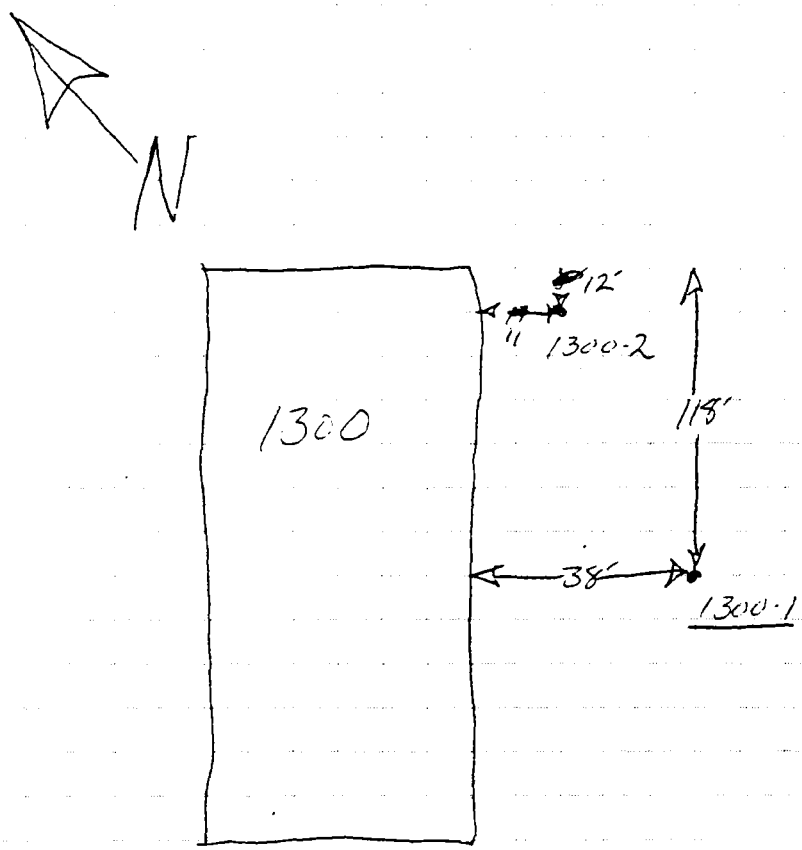

PRODUCT 204-1 NEBS Inc., Groton, Mass. 01471

ESE
P. O. Box ESE
GAINESVILLE, FL 32602
(904) 332-3318

JOB
SHEET NO. OF
CALCULATED BY M. SOMAR DATE 10/23/86
CHECKED BY DATE
SCALE

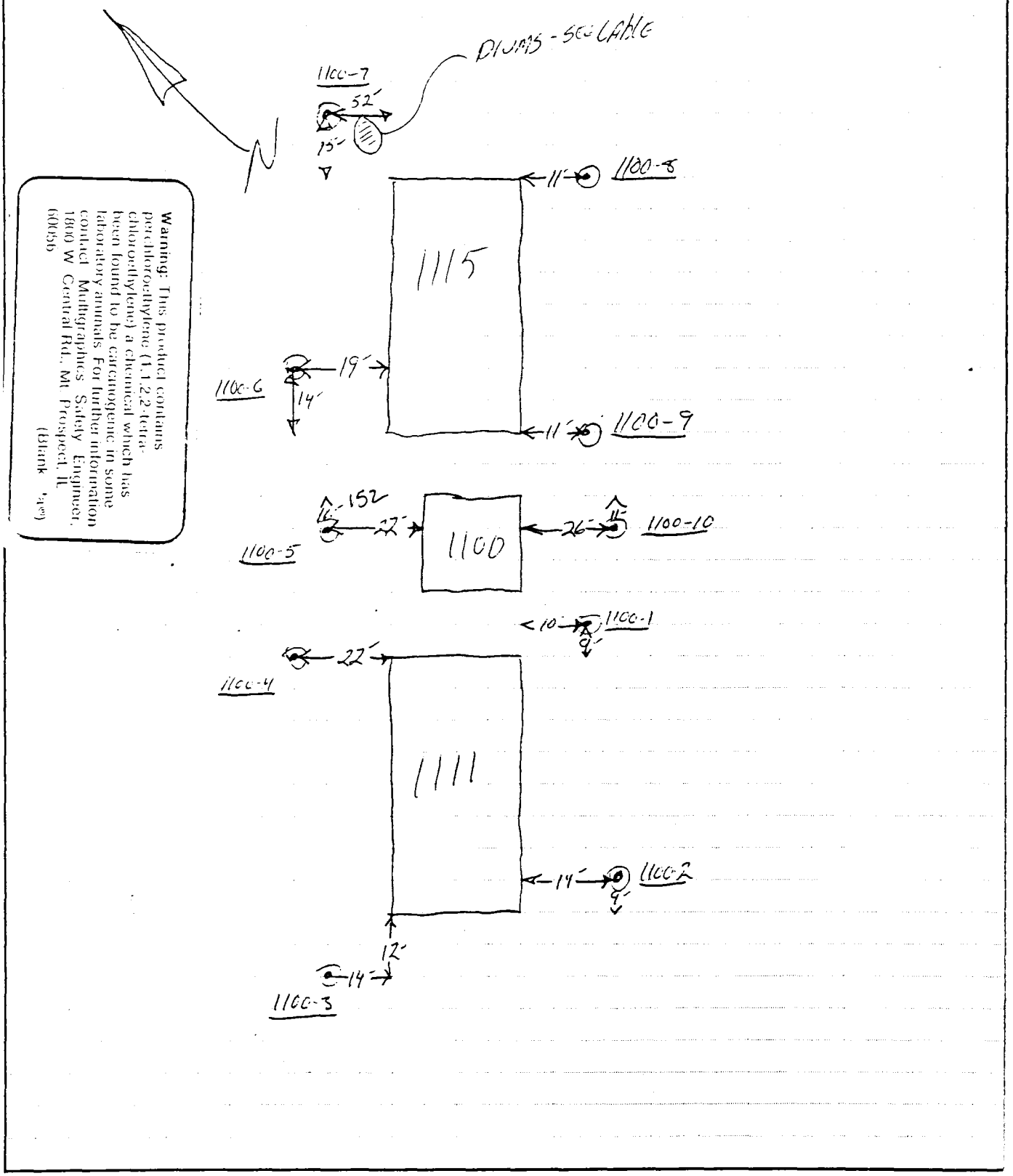

Warning: This product contains perchloroethylene (1,1,2,2-tetra-chloroethylene) a chemical which has been found to be carcinogenic in some laboratory animals. For further information contact Multigraphics Safety Engineer, 1800 W Central Rd., Mt. Prospect, IL 60056

(Blank side)

PRODUCT 204-1 NEBS Inc. Groton Mass. 01471

Table B-4. Soil Gas Data For Buildings 1300 and 1100.

Sample ID	TCE* (nl/l)+
1300-1	295
1300-2	<10
1100-1	<10
1100-2	<10
1100-3	10
1100-4	<10
1100-5	152
1100-6	<10
1100-7	<10
1100-8	<10
1100-9	<1000
1100-10	<2000

Note: * TCE = Trichloroethene
+ nl/l = nanoliter per liter (parts per billion)

Source: ESE, 1987.

ESE
P. O. Box ESE
GAINESVILLE, FL 32602
(904) 332-3318

JOB _____

SHEET NO. _____ OF _____

CALCULATED BY M. SMAR DATE 10/23/86

CHECKED BY _____ DATE _____

SCALE _____

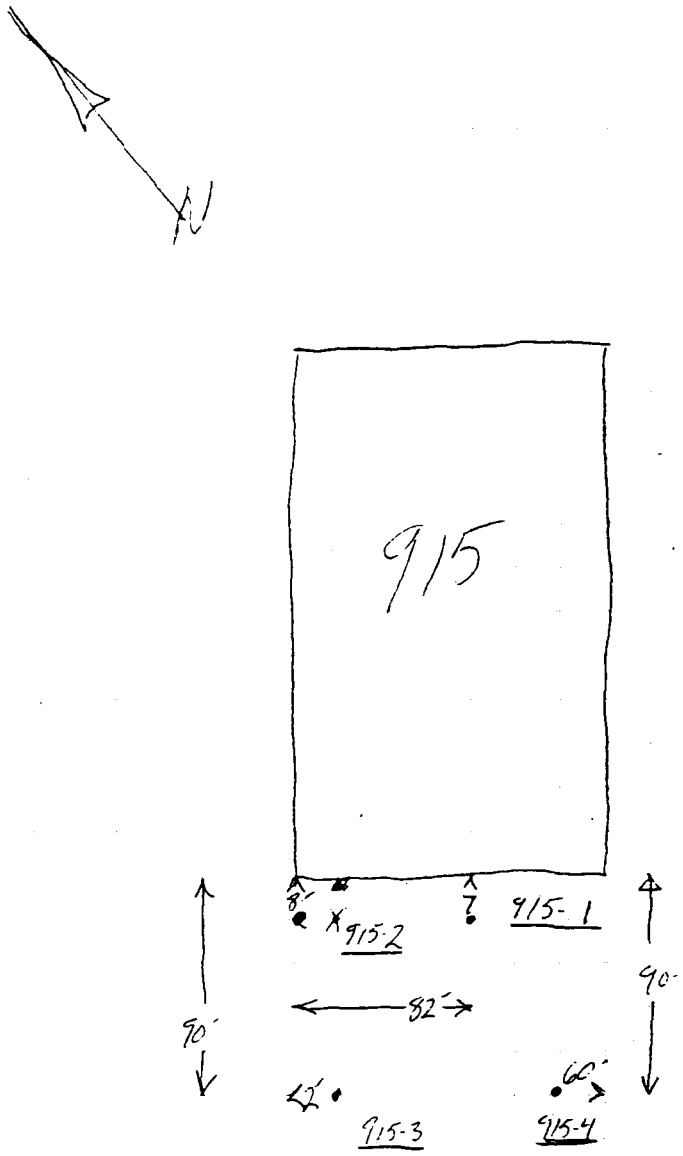

PRODUCT 204-1 NEBS Inc. Groton Mass. 01471

Table B-5. Soil Gas Data For Building 915.

Sample ID	TCE* (nl/l)+
915-1	<10
915-2	<10
915-3	<10
915-4	<10

Note: * TCE = Trichloroethene
+ nl/l = nanoliter per liter (parts per billion)

Source: ESE, 1987.

ESE
P. O. Box ESE
GAINESVILLE, FL 32602
(904) 332-3318

JOB

SHEET NO. OF

CALCULATED BY M. SMAR DATE

CHECKED BY 10/24/86 DATE

SCALE

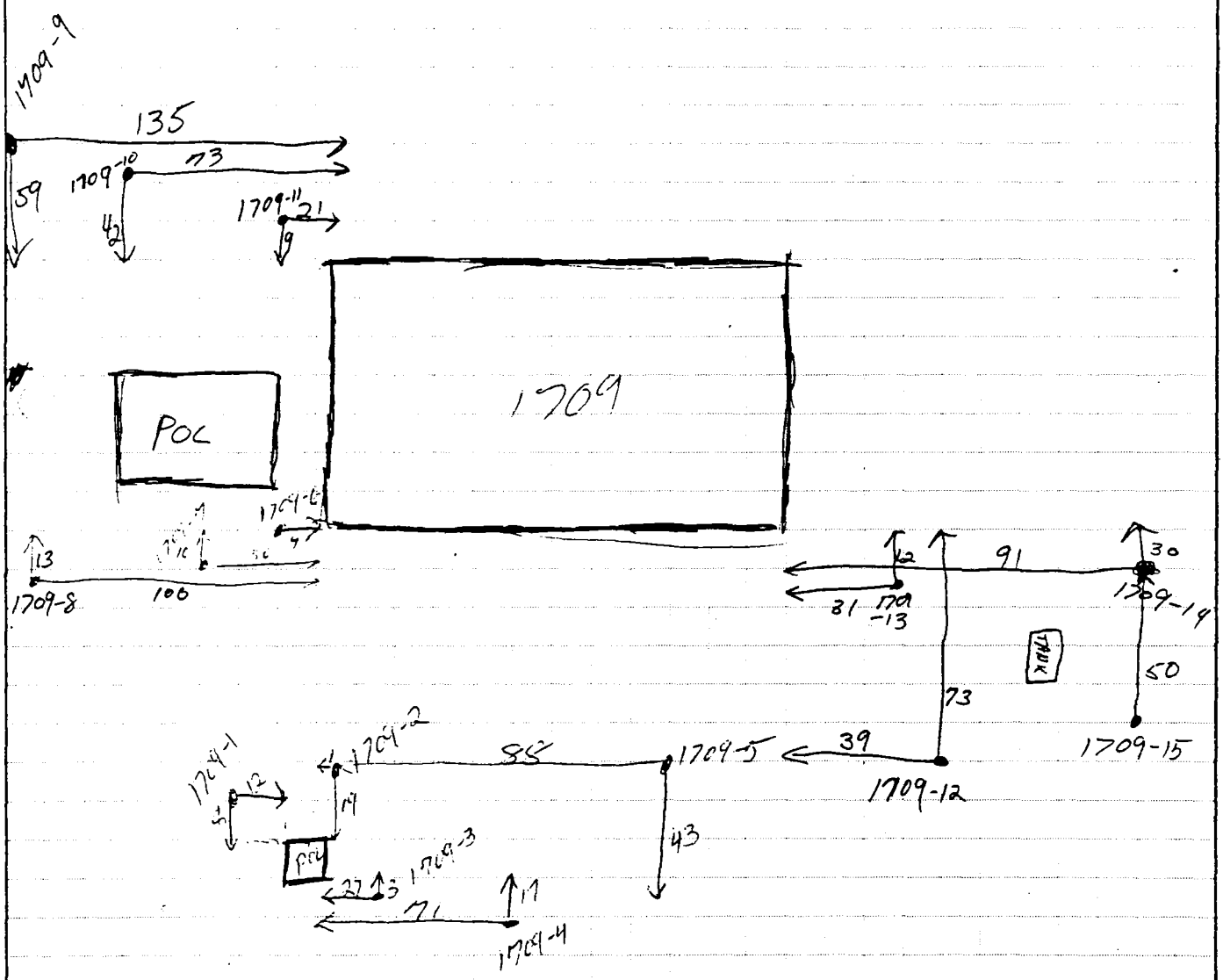

PRODUCT 204-1 NEBS Inc., Groton, Mass. 01471.

ESE
P. O. Box ESE
GAINESVILLE, FL 32602
(904) 332-3318

JOB

SHEET NO. OF

CALCULATED BY M. SMAR DATE

CHECKED BY 10/24/86 DATE

SCALE

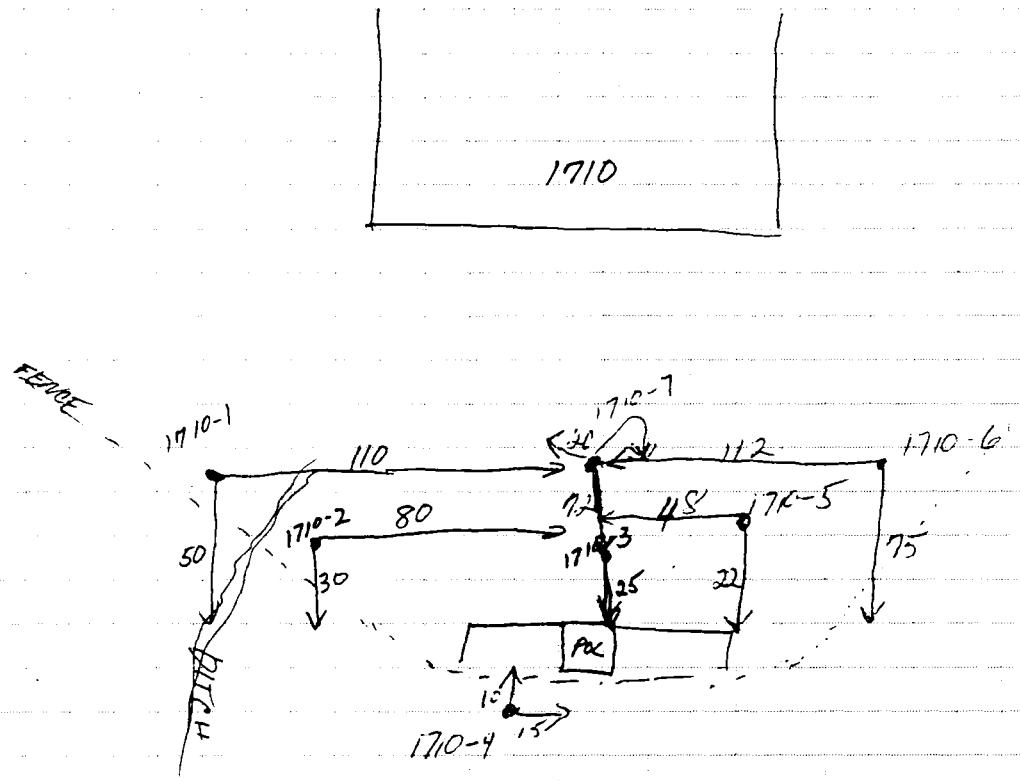

PRODUCT 204-1 NEBS Inc. Groton, Mass. 01471

Table B-6. Soil Gas Data For Buildings 1709 and 1710.

Sample ID	TCE* (nl/l)+
1709-1	<10
1709-2	35
1709-3	53000
1709-4	<10
1709-5	<10
1709-6	<10
1709-7	<100
1709-8	<10
1709-9	<1000
1709-10	<10
1709-11	<10
1709-12	<10
1709-13	<10
1709-14	<10
1709-15	<10
1710-1	<10
1710-2	<1000
1710-3	<10
1710-4	<10
1710-5	<1000
1710-6	<1000
1710-7	<100000

Note: * TCE = Trichloroethene
+ nl/l = nanoliter per liter (parts per billion)

Source: ESE, 1987.

ESE
P. O. Box ESE
GAINESVILLE, FL 32602
(904) 332-3318

JOB
SHEET NO. OF
CALCULATED BY DATE 10/27/86
CHECKED BY DATE
SCALE

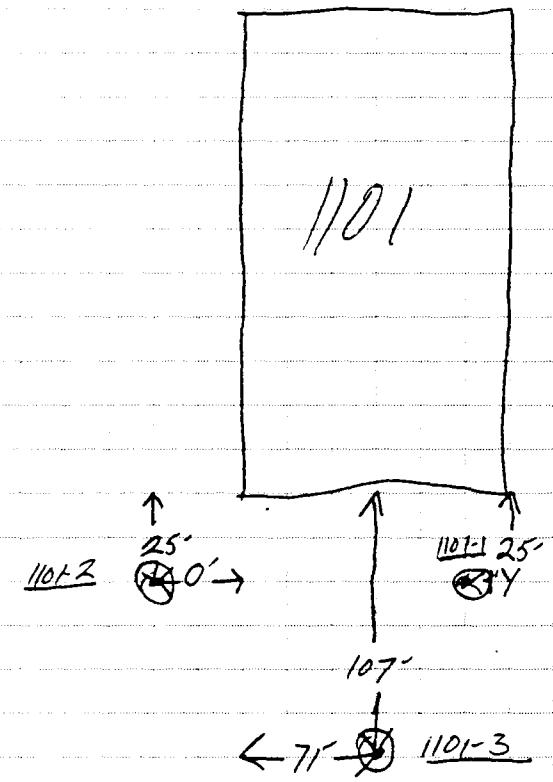

ESE
P. O. Box ESE
GAINESVILLE, FL 32602
(904) 332-3318

JOB

SHEET NO. OF

CALCULATED BY DATE 10/27/86

CHECKED BY DATE

SCALE

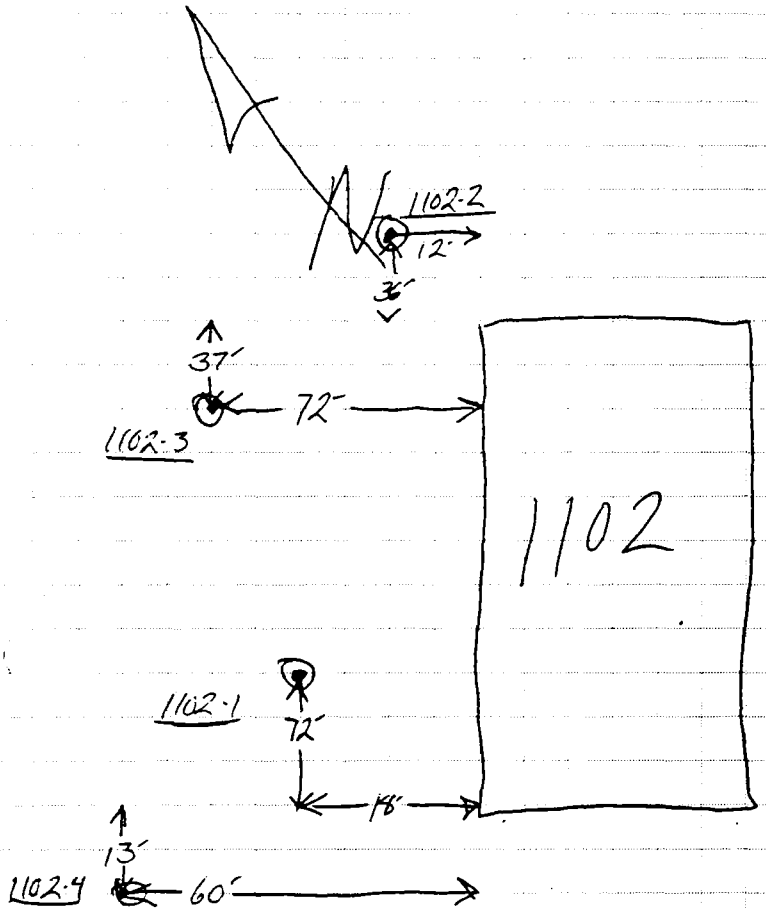

PRODUCT 204-1 NEBS Inc., Groton, Mass. 01471.

ESE
P. O. Box ESE
GAINESVILLE, FL 32602
(904) 332-3318

JOB
SHEET NO. OF
CALCULATED BY M. SAMAD DATE 10/23/86
CHECKED BY DATE
SCALE

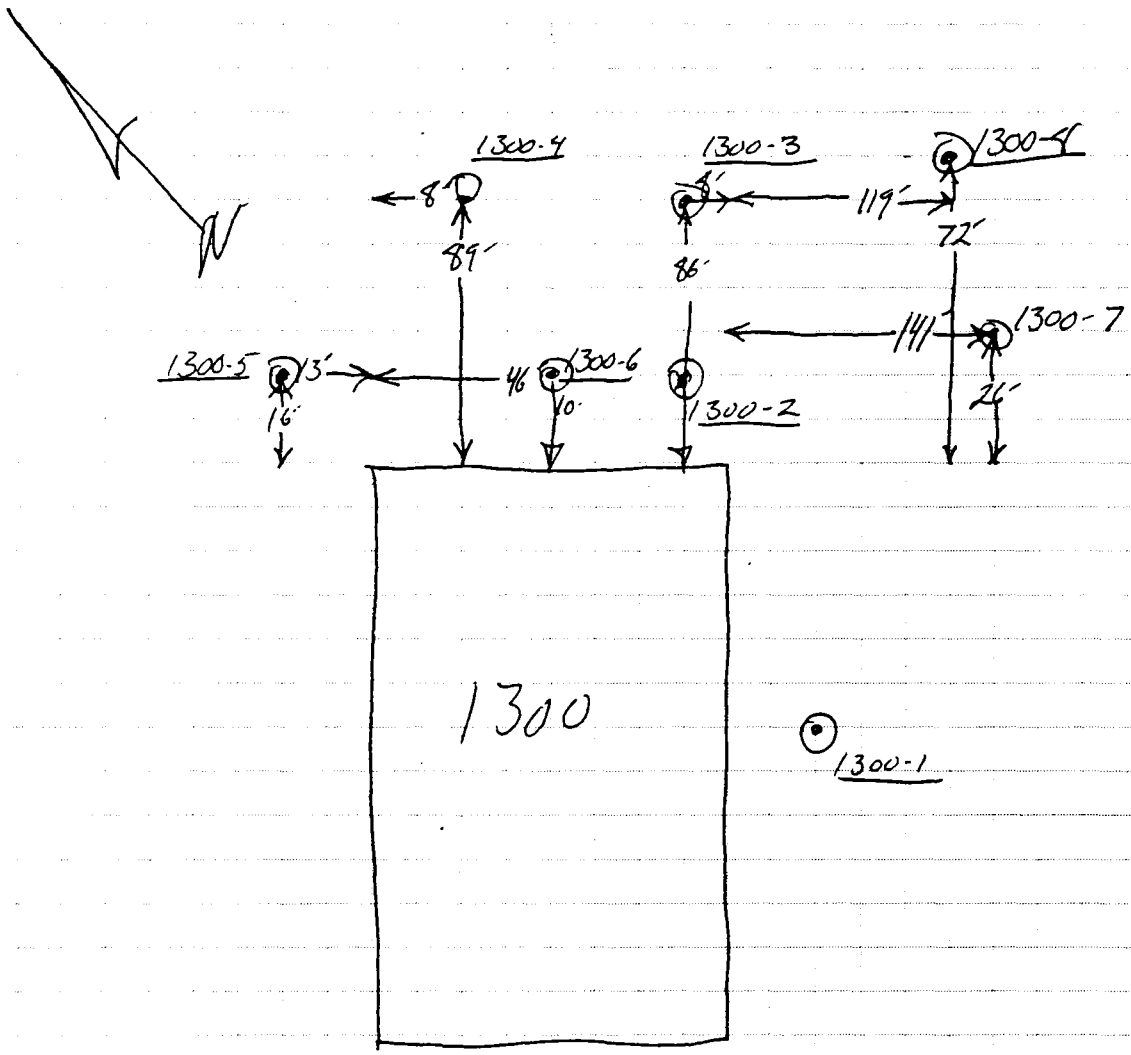

PRODUCT 204-1 NEBS Inc., Groton, Mass. 01471.

ESE
P. O. Box ESE
GAINESVILLE, FL 32602
(904) 332-3318

JOB _____
SHEET NO. _____ OF _____
CALCULATED BY _____ DATE _____
CHECKED BY _____ DATE _____
SCALE _____

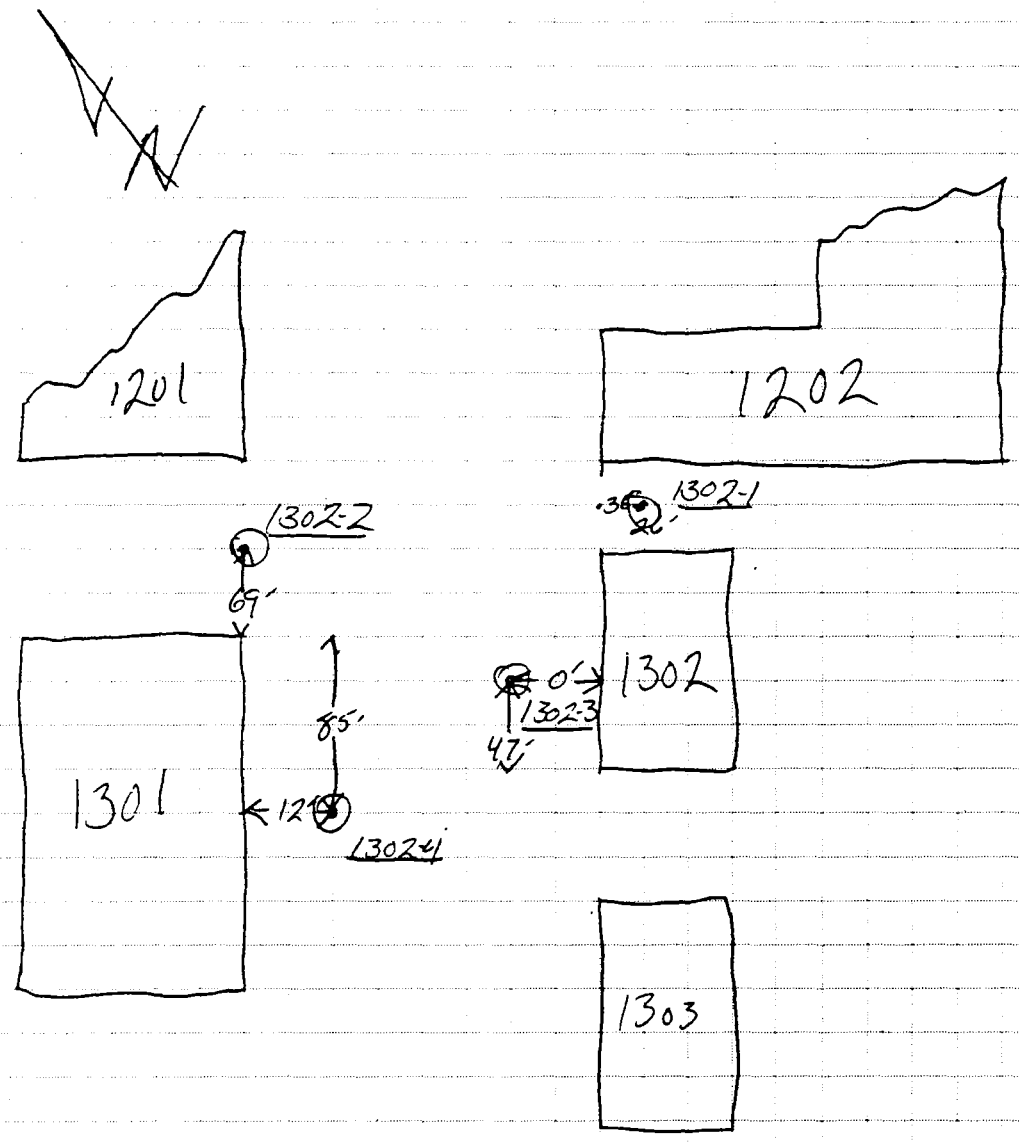

PRODUCT 234-1 NEBS Inc., Groton, Mass. 01471

Table B-7. Soil Gas Data For Buildings 1300, 1302, 1101, and 1102.

Sample ID	TCE* (nl/l)+
1300-1	295
1300-2	<10
1300-3	<10
1300-4	<10
1300-5	<10
1300-6	<10
1300-7	46
1300-8	404
1302-1	<10
1302-2	1250
1302-3	<10
1302-4	25
1101-1	<10
1101-2	<10
1101-3	<10
1102-1	442
1102-2	<10
1102-3	<10
1102-4	800

Note: * TCE = Trichloroethene
+ nl/l = nanoliter per liter (parts per billion)

Source: ESE, 1987.