M67001.AR.004324
MCB CAMP LEJUENE
5090.3a

FINAL PHASE 2 PILOT STUDY REPORT FOR SITE 73 OPERABLE UNIT 21 (OU 21) MCB CAMP LEJEUNE NC

10/01/2008

AGVIQ/CH2M HILL

10/1/08 - 04324

Final

Phase 2 Pilot Study Report
Site 73, Operable Unit 21

Marine Corps Base, Camp Lejeune
Jacksonville, North Carolina

Task Order 071

October 2008

Prepared for

Department of the Navy
Naval Facilities Engineering Command
Mid-Atlantic Division

Under the

AGVIQ-CH2M HILL JV 1 Program
Contract N62470-03-D-4401

Prepared by

AGVIQ ENVIRONMENTAL SERVICES
CH2M HILL

Charlotte, North Carolina

Executive Summary

A pilot study was conducted from February 15, 2007 to March 15, 2008 at Site 73 testing the use of air sparging using an existing directionally drilled horizontal well. The intent of the study was to also incorporate ozone to enhance air sparging, but due to equipment issues, the ozone system only operated minimally and had no real impact on the study. The Navy wished to use the existing horizontal well to try another technology. Groundwater at Site 73 is impacted by chlorinated volatile organic compounds (cVOCs), primarily trichloroethene (TCE).

A prior pilot test was performed at the site from March 18, 2004 to May 26, 2005 by MicroPact Engineering (MicroPact) to evaluate hydrogen gas sparging. The initial study involved the installation of a horizontal directional drilled (HDD) well with periodic pulsed injection of hydrogen gas into the HDD well, with the objective of enhancing biological reductive dechlorination of cVOCs. The study's conclusion was that not enough hydrogen was used to have any impact within the subsurface. Hydrogen was not detected in monitoring wells above background levels at any time during the pilot test period and total volatile organic compounds (VOCs) decreased only 8 percent during the test.

Groundwater contamination appears to be concentrated generally in the deep aquifer, with the highest concentrations detected at depths between 70 and 75 feet (ft) below ground surface (bgs).

The following scope of work for the air sparging pilot study consisted of:

- Retrofitting of the existing horizontal well
- Installation of four soil gas monitoring wells
- Transfer of equipment from Site 86 to Site 73
- System start-up, operation, maintenance, and monitoring

System preparation occurred between December 11, 2006 and January 5, 2007. The system was started on February 15, 2007 and operated for approximately 12 months. Groundwater sampling of 13 monitoring wells was conducted throughout the pilot study and consisted of a baseline sampling event in December 2006 and five pilot study monitoring events conducted from March 2007 to March 2008.

Four soil vapor wells were installed approximately 5 ft from four of the entrances of building A-47 in November 2006 to monitor vapor that may be generated during system operation. The first soil vapor well was installed immediately outside of an administrative office located on the Southwest side of the building. The remaining three soil vapor wells were installed on the southeast (bay side) of building A-47. Soil vapor samples were collected during the baseline sampling even in December 2006 and also during each groundwater sampling event conducted between March 2007 and March 2008.

Four sub-slab probes were also installed inside of building A-47. Each sub-slab probe was located approximately 10 ft adjacent from the respective soil vapor well. The sub-slab

probes were measured for pressure during each sampling event and periodically throughout the operation of the system.

The primary results of the study indicated the following:

- Average TCE concentrations in the deep monitoring wells were reduced 75 percent.
- TCE concentrations in the one intermediate depth well (73-MW49IW) monitored throughout the pilot study had a 93 percent reduction.
- Average TCE concentrations in the shallow monitoring wells increased from less than 1 micrograms per liter (µg/L) to 49.5 µg/L.
- Contrary to the TCE reduction, the average DCE concentrations increased by 75 percent in the deep wells (174 µg/L to 304 µg/L).
- Average vinyl chloride (VC) concentrations were relatively steady through the test (50.9 µg/L to 51.7 µg/L).
- Assessment of ozone sparging proved inconclusive due to limited period of continuous ozone generation.
- When evaluating all of the data, it appears that enhanced reductive dechlorination (ERD) is the primary treatment mechanism. Air sparging should remove all volatile contaminants, as was observed at Site 86. The results for Site 73 are showing selective reduction of contaminants, i.e. TCE being reduced, while dichloroethene (DCE) increases.
- Estimated radius of influence based on field data, observations, and chemical data of at least 125 ft from the horizontal well.
- The air sparging system operated for 355 days and was up 90.6 percent of the time at an average flow rate of 131.7 standard cubic feet per minute (scfm) with a pressure of 32.6 pounds per square inch (psi). The ozone system operated for 61days and was up 29 percent of the time.

Contents

Executive Summary ..... **iii**

Acronyms and Abbreviations ..... **vii**

1 Introduction **1-1**
- 1.1 Site Background 1-1
  - 1.1.1 Site Description 1-1
  - 1.1.2 Geology and Hydrogeology 1-1
- 1.2 Rationale for Technology Selection 1-2
- 1.3 Pilot Study Objectives and Goals 1-2
- 1.4 Pilot Study Chronology 1-3

2 Air/Ozone System Transfer and Operation **2-1**
- 2.1 Horizontal Well 2-1
- 2.2 Compressed Air and Ozone Generation System 2-1
- 2.3 Soil Vapor Well Installation 2-2
  - 2.3.1 Drilling 2-2
  - 2.3.2 Well Completion 2-2
- 2.4 Sub-Slab Probes 2-3
  - 2.4.1 Installation 2-3
  - 2.4.2 Pressure Measurement 2-3
- 2.5 System Installation and Operation 2-3
  - 2.5.1 Equipment 2-3
  - 2.5.2 Air Sparge System Operation 2-5
  - 2.5.3 Ozone System Operation 2-6

3 Pilot Study Monitoring **3-1**
- 3.1 Monitoring 3-1
  - 3.1.1 Groundwater Monitoring 3-1
  - 3.1.2 Soil Vapor Monitoring 3-1
- 3.2 Groundwater Analytical Results 3-2
  - 3.2.1 Volatile Organic Compounds 3-2
  - 3.2.2 Indicator Parameters 3-4
- 3.3 Soil Vapor Analytical Results 3-5
- 3.4 Zone of Influence 3-5
- 3.5 Discussion of Results 3-5

4 Conclusions **4-1**
- 4.1 Observations 4-1
- 4.2 Lessons Learned 4-2
- 4.3 Costs 4-2

5 References **5-1**

Appendixes

A Soil Vapor Well completion Diagrams
B Air/Ozone System Photos
C Groundwater Analytical Data Summary Table
D Soil Vapor Analytical Data Summary Table
E Water Quality Parameter Data Tables

Tables

1-1 Air Sparge/Ozone System Chronology

2-1 Compressed Air System Components
2-2 Ozone System Components
2-3 Steady State Compressed Air System Operational Parameters
2-4 Ozone System Operational Parameters

3-1 Monitoring Well Construction

4-1 Pilot Study Cost Breakdown

Figures

1-1 Base Location Map
1-2 Site Location Map
1-3 Cross-Section Location Map
1-4 Geologic Cross-Section A-A'
1-5 Geologic Cross-Section B-B'
1-6 Groundwater Elevation Map, Shallow
1-7 Groundwater Elevation Map, Deep
1-8 Potentiometric Surface Map (150 feet bgs), April 2006

2-1 Horizontal Well Layout with Monitoring Locations Map
2-2 Cumulative Ozone Generation

3-1 Groundwater Level Trend
3-2 Average Contaminant of Concern Concentration Trends in Shallow Monitoring Wells
3-3 IR73-MW49IW Historic Contaminants of Concern Concentration Trends
3-4 TCE Results in Deep Monitoring Wells
3-5 Average Contaminants of Concern Concentration Trends in Deep Monitoring Wells
3-6 IR73-MW49DW Historic Contaminants of Concern Concentration Trends
3-7 Average Dissolved Oxygen Results
3-8 Individual Deep Well Dissolved Oxygen Results
3-9 Average Oxidation-Reduction Potential Results
3-10 Individual Deep Well Oxidation-Reduction Potential Results
3-11 Trichloroethene concentration in Soil Vapor Wells

Acronyms and Abbreviations

ASME	American Society of Mechanical Engineers
AST	aboveground storage tank
bgs	below ground surface
BTU	British Thermal Unit
cfm	cubic feet per minute
COC	chain-of-custody
cVOC	chlorinated volatile organic compound
°C	degrees Celsius
°F	degrees Fahrenheit
DCE	dichloroethene
DO	dissolved oxygen
ERD	enhanced reductive dechlorination
FSP	Field Sampling Plan
ft	feet, foot
ft/day	feet per day
ft/ft	feet per foot
g/m^3	grams per cubic meter
gpm	gallons per minute
HAZMAT	hazardous materials
HDD	horizontal directional drilling
HDPE	high density polyethylene
HSA	hollow stem auger
Hz	Hertz
ID	inner diameter
IDW	investigation-derived waste
JV 1	AGVIQ-CH2M HILL Joint Venture I
LNAPL	light non-aqueous phase liquid
µg/L	micrograms per liter
mA	milliAmpere
MCB	Marine Corps Base
mV	milliVolt
NAPL	non-aqueous phase liquid
NCGWQS	North Carolina Groundwater Quality Standards
NPT	National Pipe Thread

OMI	operator machine interface
ORP	oxidation-reduction potential
OU	operable unit
OWS	oil/water separator
PLC	programmable logic control
ppd	pounds per day
ppm_v	parts per million by volume
psi	pounds per square inch
psig	pounds per square inch gauge
PVC	polyvinyl chloride
scfm	standard cubic feet per minute
SDR	standard dimension ration
TVSS	transient voltage surge suppression
USCS	Unified Soil Classification System
UST	underground storage tank
V	volt
VC	vinyl chloride
VOC	volatile organic compound

SECTION 1

Introduction

This Phase 2 Pilot Study Report presents the field activities, data, results, and conclusions of the pilot study conducted at Operable Unit (OU) 21, Site 73 at Marine Corps Base (MCB) Camp Lejeune located in Onslow County, North Carolina. The pilot study was conducted to evaluate the performance and effectiveness of air and ozone sparging for removal of trichloroethylene (TCE) and its daughter products in groundwater. The test was performed using an existing horizontal directionally drilled (HDD) well, that was installed by MicroPact Engineering (MicroPact) in February, 2004.

Site background information and the selection process for the pilot study technology are presented in the following sections.

1.1 Site Background

Information concerning site characterization, contaminant concentrations, plume distribution, and subsurface geology/hydrogeology is documented in the *Supplemental Remedial Investigation of Operable Unit 21 (Site 73)* (CH2M HILL, 2008). A summary of this information is provided in the following paragraphs.

1.1.1 Site Description

Site 73 is located in the Courthouse Bay Area of MCB Camp Lejeune (as shown on Figure 1-1) and serves as the Amphibious Vehicle Maintenance Facility, which started operations in 1946 and is still active. Site 73 consists of numerous buildings, aboveground storage tanks (ASTs), underground storage tanks (USTs), vehicle wash racks, and oil/water separators (OWSs). Most active and former USTs are or were located within the fenced area around Building A47, the 2nd Assault Amphibian Battalion Maintenance and office building. Non-petroleum type wastes are routinely handled at an active hazardous materials (HAZMAT) storage area located near UST A47/3. Other active and former USTs are or were located near Buildings A1, A2, and A10. Figure 1-2 shows a map of the site.

The primary contaminants of concern at Site 73 are the chlorinated solvent compounds TCE, 1,1-dichloroethene (1,1-DCE), cis-1,2-dichloroethene (*cis*-1,2-DCE), vinyl chloride (VC), and benzene. Exceedences of comparison criteria, North Carolina Groundwater Quality Standards (NCGWQS, 2L standards), were observed in both the shallow and deep aquifers at Site 73.

1.1.2 Geology and Hydrogeology

Site 73 is underlain by the Belgrade Formation, a semi-confining unit that typically separates the surficial and Castle Hayne aquifer; however, based on hydraulic head differentials, it does not appear that this unit is restricting flow from the surficial aquifer to the Castle Hayne aquifer. Geologic cross-section locations are shown on Figure 1-3 and stratigraphic cross-sections are presented on Figures 1-4 and 1-5. During the April 2006 well gauging

event, the water table was at a depth ranging from 1.08 feet (ft) to 12.18 ft below ground surface (bgs) within the vicinity of the Amphibious Vehicle Maintenance Facility. The groundwater contours for the surficial and Castle Hayne aquifers based on April 2006 measurements are depicted on Figures 1-6 through 1-8. In general, groundwater flow direction within the shallow aquifer of Site 73 is to the southeast, towards Courthouse Bay. However, mounding effects in the water table create some localized radial flow within the vicinity of Buildings A3 and A11. The average horizontal conductivity of the shallow aquifer is approximately 1.3 feet per day (ft/day). The bottom of the shallow aquifer averages 41 ft bgs. The fine silty and clayey sand of the Belgrade formation is laterally discontinuous at Site 73 and therefore may only provide semi-confining conditions to the deep unit below.

Within the deep (Castle Hayne) unit, groundwater flow was determined to be generally southeast toward Courthouse Bay. The average horizontal conductivity of the upper Castle Hayne aquifer is approximately 3.6 ft/day, with a horizontal hydraulic gradient of approximately 0.002 feet/foot (ft/ft). Vertical hydraulic potentials calculated between the shallow and deep zones generally indicate a slight downward potential, ranging from 0.005 to 0.054 ft/ft. Variability may be due to lateral discontinuity of the Belgrade formation and heterogeneity of soils underlying Site 73.

1.2 Rationale for Technology Selection

MicroPact performed a pilot test at the site to evaluate hydrogen gas sparging from March 18, 2004 to May 26, 2005. MicroPact installed a HDD well for the study in February 2004. The pilot test involved periodic, pulsed injection of pure hydrogen gas into the HDD well, with the objective of enhancing biological reductive dechlorination of chlorinated VOCs (cVOCs). The following overview of the hydrogen sparging pilot study was summarized from the draft Pilot Study Report for Site 73 (MicroPact Engineering, Inc. and Baker Environmental, 2006).

The hydrogen sparging pilot study did not meet its objective and was considered ineffective. Hydrogen was not detected in monitoring wells above background levels at any time during the pilot test period. Helium was injected as a tracer gas during at least two events; however, it was detected in only one well (73-MW63DW), during one of the sampling events. An overall VOC reduction of only 8 percent was achieved.

In 2006, the Camp Lejeune Partnering Team decided to re-test the horizontal well at Site 73 using a combination of air and ozone sparging, which had been used to successfully treat TCE (> 98% reduction) at Site 86. Existing equipment from Site 86 test was re-located to Site 73 for the subject evaluation.

1.3 Pilot Study Objectives and Goals

The primary objective of this pilot test is to evaluate the effectiveness of air and ozone sparging for removal of dissolved TCE. The effectiveness of the test will be evaluated according to the following criteria:

1. Contaminant reduction in groundwater, as quantified by pre- and post-start-up groundwater samples.
2. Minimization of contaminant mobility, as quantified by comparing groundwater analytical data collected prior to and during the pilot test. Groundwater samples will be collected and analyzed from monitoring wells positioned at the interior, exterior, and periphery of the plume. Groundwater potentiometric surface measurements will also be recorded in the immediate vicinity of the test area to assist with evaluation of these criteria.

1.4 Pilot Study Chronology

The Site 73 pilot study and associated field activities were conducted between December 2006 and March 2008. A chronology of the Phase 2 Pilot Study is presented in Table 1-1.

TABLE 1-1
Air Sparge/Ozone System Chronology

Date	Event
11/17/2006	Soil Vapor Monitoring Well Installation
12/11/2006	Equipment Transfer from Site 86 to Site 73
12/14/06 - 12/21/06	Baseline Sampling
12/15/2006	Trenching and Pipe install (additional 200 feet)
1/4/07 – 1/5/07	Pipe install and connections between system containers
2/7/2007	Subslab Probe Installation
2/15/2007	Initial start-up of the Air Sparge System
3/19/07-3/22/07	Sampling Event - One month after startup
4/11/2007	First Ozone Start-up attempt -- Air conditioner malfunctions
7/2/07-7/5/07	Sampling Event - Three months after startup
7/2/06 - 7/19/07	Relay switch for Booster Pumps Installed
8/13/2007	New PLC Installed, Ozone system Started
8/16/07 – 8/24/07	Ozone runs at 100% -- air sparge system alarmed and shutoff due to low pressure build-up in the receiver tank
9/24/07 - 9/26/07	Sampling Event - Six months after startup
10/12/2007	Lightening arrestors installed
10/30/2007	Cascading surge protection installed
10/30/07 – 11/06/07	Ozone runs at 100% -- Ozone off in order to install cascading surge protection
11/14/07 – 11/16/08	Ozone runs at 100% -- Ozone off due to “Rectifier Fault”
11/27/07 – 12/06/07	Ozone runs at 100% -- Ozone Alarm – Production Stop
12/17/07 - 12/19/07	Sampling Event - Nine months after startup
12/19/07 – 12/28/07	Ozone runs at 100% -- Ozone Alarm – Production Stop
1/22/08 – 1/28/08	Ozone runs at 100% -- Ozone Alarm – Production Stop
2/18/08 – 2/29/08	Ozone runs at 100% -- Ozone Alarm – Production Stop
3/15/2007	System shut down
3/17/07 - 3/19/07	Sampling Event - Twelve months after startup (final)

V:\USNavFacEngCom\CampLejeune\MapFiles\Site_73\Pilot_Study_Report\Figure_1_1_Base_Location_Map.mxd

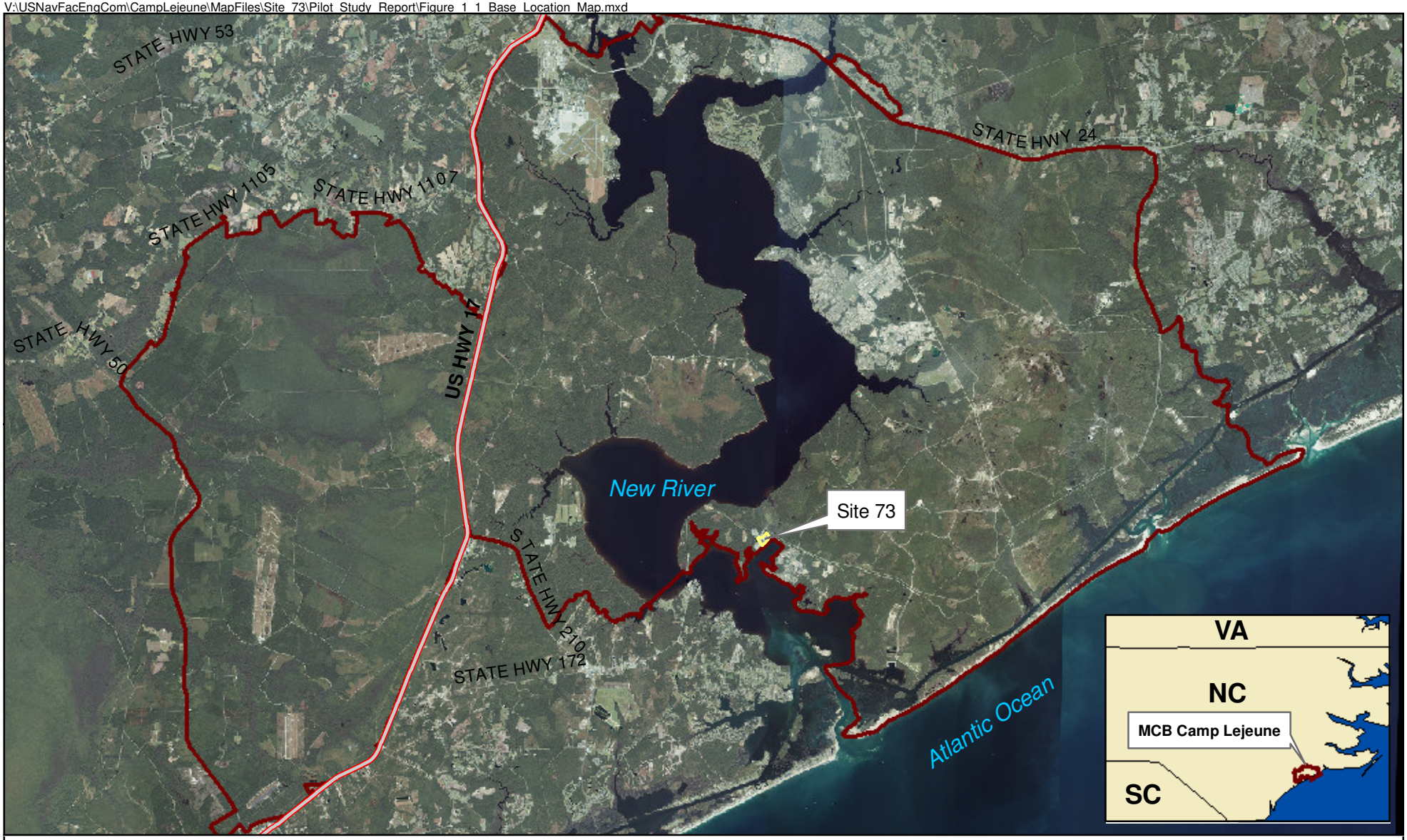

Legend
- Highways
- Site 73
- Installation Boundary

N

0 7,500 15,000 30,000 Feet

1 inch equals 15,000 feet

Figure 1-1
Site Location Map
Site 73 Pilot Study Report
MCB Camp Lejeune
North Carolina

AGVIO
CH2M HILL

\\aphrodite\proj\USNavFaceNGCom\CampLejeune\MapFiles\Site_73\Site_73_Pilot_Study_Report\Figure_1_2_Site_Map_revised.mxd

Legend

- Shallow Monitoring Well
- Intermediate Monitoring Well
- Deep Monitoring Well
- Pilot Test Sub-Slab Probe
- Pilot Test Soil Gas Well
- Horizontal Well
- Slotted Section of Horizontal Well
- Air and Ozone Sparge Containers
- Base Boundary

N

0 75 150 300 Feet

1 inch equals 150 feet

Figure 1-2
Site Map
Site 73 Pilot Study Report
MCB Camp Lejeune
North Carolina

AGVIO
CH2M HILL

\\aphrodite\proj\USNavFaceNGCom\CampLejeune\MapFiles\Site_73\Site_73_Pilot_Study_Report\Figure_1_3_Geologic_Cross_Section_Loc_Map.mxd

Legend

- Monitoring Wells
- Abandoned Monitoring Wells
- Cross-Section
- Base Boundary

N

0 150 300 600 Feet

1 inch equals 300 feet

Figure 1-3
Geologic Cross Section Location Map
Site 73 Pilot Study Report
MCB Camp Lejeune
North Carolina

AGVIQ
CH2M HILL

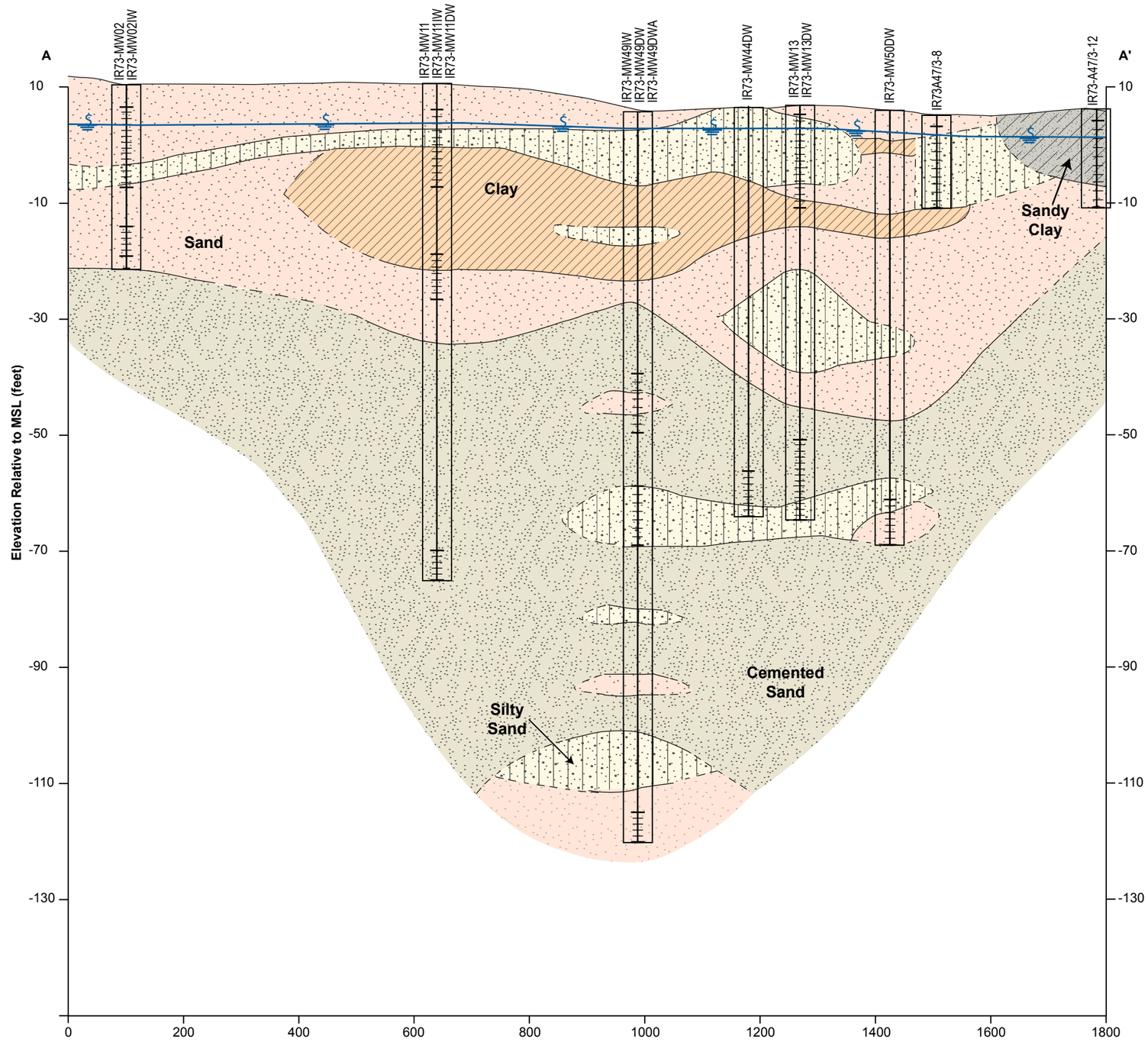

Horizontal : 1" = 200'
Vertical: 1" = 20'
V.E. = 10x

LEGEND

- Clay
- Silty Sand
- Cemented sand
- Sand
- Sandy Clay
- Screened Interval
- Inferred geologic contact
- Water table elevation

NOTE

1) The depth and thickness of the subsurface strata indicated on this section (profile) were generalized from and interpolated between test locations. Information on actual subsurface conditions apply only to the specific locations indicated. Subsurface conditions and water levels at other locations may differ from conditions occurring at the indicated locations.
2) All water levels were measured during sampling event in April 2006.

Figure 1-4
Geological Cross Section (A-A')
Site 73 Pilot Study Report
Marine Corps Base, Camp Lejeune
North Carolina

AGVIO
CH2M HILL

ES012008004MKE Figure1_A-A'_v9.ai 03.11.08 sls

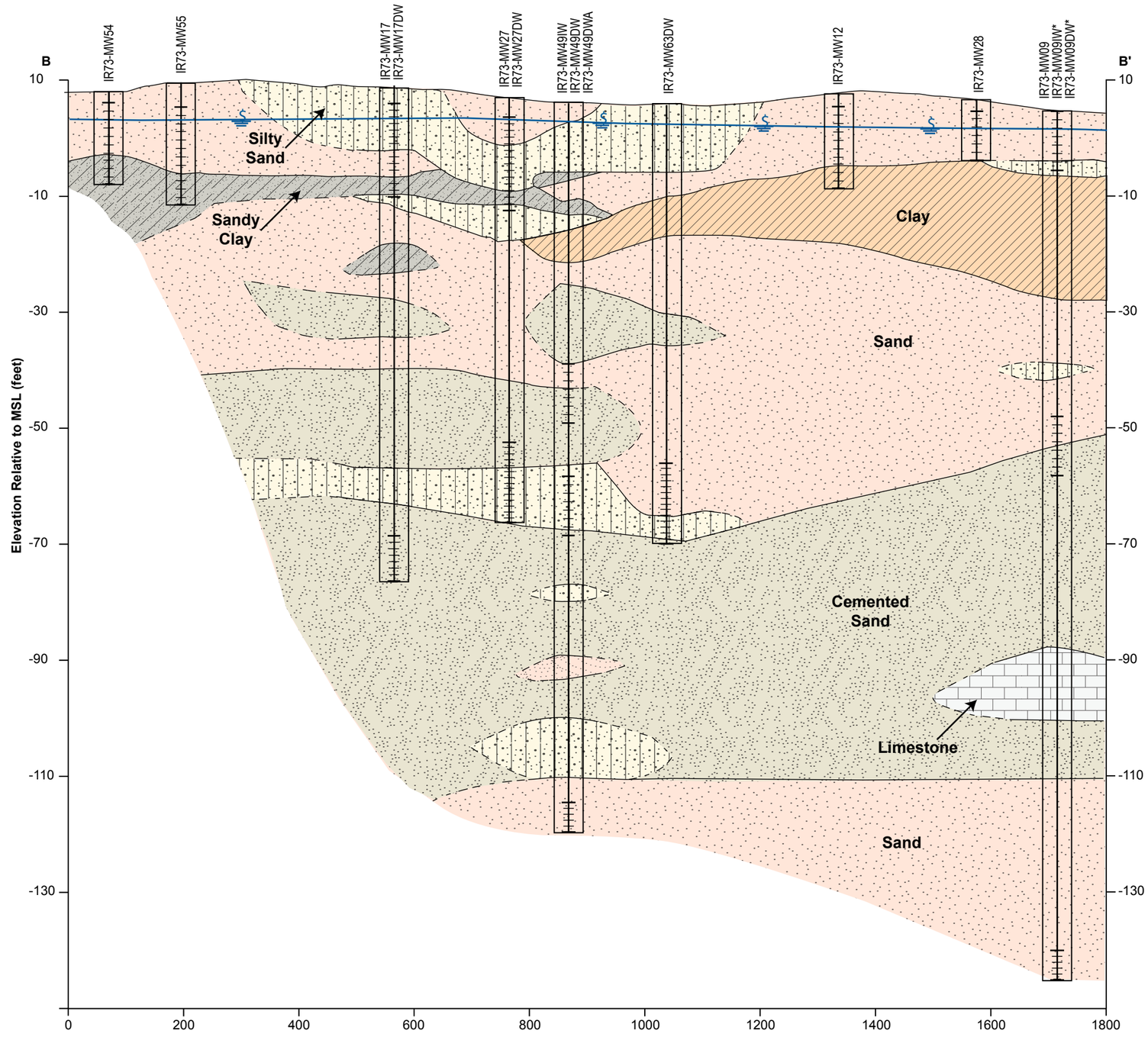

Horizontal : 1" = 200'
Vertical: 1" = 20'
V.E. = 10x

LEGEND

- Clay
- Silty Sand
- Cemented sand
- Sand
- Sandy Clay
- Limestone
- Screened Interval
- Inferred geologic contact
- Water table elevation

NOTE

1) The depth and thickness of the subsurface strata indicated on this section (profile) were generalized from and interpolated between test locations. Information on actual subsurface conditions apply only to the specific locations indicated. Subsurface conditions and water levels at other locations may differ from conditions occurring at the indicated locations.
2) All water levels were measured during sampling event in April 2006.
3) * Monitoring wells IR73-MW09IW and IR73-MW09DW abandoned prior to April 2006 sampling event.

Figure 1-5
Geological Cross Section (B-B')
Site 73 Pilot Study Report
Marine Corps Base, Camp Lejeune
North Carolina

AGVIQ CH2M HILL

ES012008004MKE Figure2_B-B'_v10.ai 03.11.08 sls

\\aphrodite\Proj\USNavFacEngCom\CampLejeune\Mapfiles\Site73\Site_73_Pilot_Study_Report\Figure_1_6_Potentio_Shallow_Zone_April 2006.mxd

Legend

- Monitoring Wells
- Potentiometric Surface Contour (dashed where inferred)
- Base Boundary
- Direction of Groundwater Flow

Note:
All water level elevations are reported in feet above mean seal level.
Potentiometric surface contours have been interpolated between monitoring well locations. Actual conditions may differ from those shown on this figure.
NM = Not measured
IR73-MW15 not used for contouring due to questionable survey data (surface elevation)
2.12 Water level elevation
bgs = Below Ground Surface

N

0 150 300 600 Feet

1 inch equals 300 feet

Figure 1-6
Potentiometric Surface Map of Water Table, April 2006
Operable Unit No. 21 (Site 73)
Site 73 Pilot Study Report
Marine Corps Base, Camp Lejeune
North Carolina

AGVIQ
CH2M HILL

\\aphrodite\Proj\USNavFacEngCom\CampLejeune\Mapfiles\Site73\Site_73_Pilot_Study_Report\Figure_1_7_Potentio_Intermediate_Zone_April 2006.mxd

Legend

- Monitoring Wells
- Potentiometric Surface Contour (dashed where inferred)
- Base Boundary
- Direction of Groundwater Flow

Note:
All water level elevations are reported in feet above mean seal level.
Potentiometric surface contours have been interpolated between monitoring well locations. Actual conditions may differ from those shown on this figure.
NM = Not measured
2.85 Water level elevation
bgs = Below Ground Surface

N

0 150 300 600 Feet

1 inch equals 300 feet

Figure 1-7
Potentiometric Surface Map (50 to 90 feet bgs), April 2006
Operable Unit No. 21 (Site 73)
Site 73 Pilot Study Report
Marine Corps Base, Camp Lejeune
North Carolina

AGVIQ
CH2M HILL

\\aphrodite\Proj\USNavFacEngCom\CampLejeune\Mapfiles\Site73\Site_73_Pilot_Study_Report\Figure_1_8_Potentio_Deep_Zone_April 2006.mxd

Legend

- Monitoring Wells
- Potentiometric Surface Contour (dashed where inferred)
- Base Boundary
- Direction of Groundwater Flow

Note:
All water level elevations are reported in feet above mean seal level.
Potentiometric surface contours have been interpolated between monitoring well locations. Actual conditions may differ from those shown on this figure.
NM = Not measured
2.83 Water level elevation
bgs = Below Ground Surface

N

0 150 300 600 Feet

1 inch equals 300 feet

Figure 1-8
Potentiometric Surface Map (150 feet bgs), April 2006
Operable Unit No. 21 (Site 73)
Site 73 Pilot Study Report
Marine Corps Base, Camp Lejeune
North Carolina

AGVIQ CH2M HILL

SECTION 2

Air/Ozone System Transfer and Operation

2.1 Horizontal Well

The horizontal sparge well was installed by MicroPact in February 2004; the layout is shown in Figure 2-1. The well is a "continuous" (double-ended) design, with a depth of approximately 88 ft bgs, consisting of three sections: 420-ft-long entry (blank casing) section, 400-ft slotted pipe section, and 350-ft-long exit (blank casing) section, resulting in a total borehole length of approximately 1,170 ft. The well is constructed entirely of 4-inch diameter standard dimension ration (SDR) 11 high density polyethylene (HDPE). The well is longitudinally slotted, with an open area of approximately 0.5 percent. The depth and layout of the well was selected to coincide with the 100 micrograms per liter (µg/L) TCE iso-concentration contour based on April 2003 data.

On December 15, 2006, approximately 200 ft of conveyance piping was added to the existing horizontal well to accommodate the placement of the two connex boxes (shipping containers) to the southwest that housed the air sparge and ozone system. The original wellhead connection could not be used due to site logistics. In order to connect the conveyance piping, a 4-inch diameter of SDR11 HDPE "Y" (clean-out) was installed at the existing, above grade manifold. The conveyance piping trench was excavated with a small DitchWitch® trenching machine, from the existing wellhead to the new system, located immediately east of the retention pond. The conveyance piping was installed at a depth of 1.5 ft. A second 4-inch diameter SDR11 HDPE "Y" was installed at the new abovegrade manifold location. Piping, fittings, and appurtenances were installed on January 5, 2007, in order to connect the two remediation system containers and horizontal well.

2.2 Compressed Air and Ozone Generation System

The air and ozone sparging system was transferred from Site 86 to Site 73. This system consists of two, 8-ft × 20-ft steel connex boxes. Container 1 housed the compressed air equipment: Kaeser BSD 50 rotary screw air compressor, 400-gallon air receiver tank, gas chiller, and condensate management system. Container 2 housed the Ozonia CFV-03 ozone generator (capable of producing approximately 60 pounds per day of ozone with dry air feed), Hankinson pressure swing desiccant dryer, booster pump system, and master control panel. The Zarsky cooling water chiller is stored outside, between the two containers. All generator outlet piping is constructed of 304 stainless steel.

The rated capacity of the air compressor is approximately 240 standard cubic feet per minute (scfm) at 120 pounds per square inch (psi). The maximum gas pressure required for sparging was expected to range from 40 to 45 psi, based on the hydrogen sparging pilot study and estimations of total head pressure (including friction losses). Three booster pumps were added to the ozone system in order to compensate for the greater depth of the horizontal well at Site 73. The booster pumps increased the maximum ozone generator outlet pressure from two bar (29 pounds per square inch gauge [psig]) to 44 psig.

During ozone production, approximately 25 scfm of compressed, cooled air was diverted from the main sparge line at Container 1 into the ozone process line (Container 2), through a series of filters, desiccant dryer, subsequently and into the ozone generator. Approximately 7 cubic feet per minute (cfm) of the diverted air stream was purged to the atmosphere by the desiccant dryer. The remaining 18 scfm was used to generate ozone, at a rate of approximately 2 percent to 3 percent (by weight). The ozone was subsequently blended back into the main process line and out to the well. Based on previous operations at Site 86, the ozone concentrations in the blended gas stream were expected to range from 3,000 to 5,000 parts per million by volume (ppm_v); similar concentrations were confirmed during operation at Site 73.

2.3 Soil Vapor Well Installation

Soil vapor sampling was conducted in the vicinity of the sparge well to determine if air that is being injected as a result of the operation of the sparge system is potentially being released to the vadose zone near the existing, occupied building (Building A47). Four soil gas monitoring wells were installed to allow for periodic monitoring to determine if VOC) concentrations exceed risk-based thresholds and if mitigation steps will need to be undertaken. The locations of the soil gas monitoring wells are shown in Figure 2-1.

2.3.1 Drilling

The soil vapor wells were installed by a North Carolina-licensed well driller using hollow stem auger (HSA) drilling techniques and were completed using 4-¼-inch inner diameter (ID) augers. The wells were installed to a depth just above the water table, approximately 5 ft bgs, and was constructed of schedule 40 polyvinyl chloride (PVC) with 1 ft of 0.010-inch slot screen and filter sand, bentonite seal with cement grout to surface. A watertight locking expansion cap was installed on top of the PVC well casing at the surface.

All drill rods, bits, augers, and associated equipment were decontaminated prior to use and between monitoring well locations. Drill cuttings and fluids were containerized and managed in accordance with the Work Plan and Base investigation-derived waste (IDW) protocols.

2.3.2 Well Completion

After the well casing and screen assembly were set, the annulus of each borehole was filled with 10-20 grade silica sand extending from the bottom of the borehole to approximately ½-ft above the top of the well screen. A minimum 2-ft thick bentonite seal was placed above the filter pack by pouring bentonite pellets down the annulus as the augers were being withdrawn. The bentonite pellets were hydrated with potable water. The bentonite was allowed to hydrate for a minimum of one hour prior to beginning placement of the cement-bentonite grout.

The remaining annular space of the borehole was grouted to within a few inches of the ground surface with Portland cement mixed with 5 percent bentonite gel. The grout at each monitoring well was allowed to cure for a minimum of 24 hours before the well pad was installed. Surface completion of each monitoring well consisted of a flush-mounted

permanent 8.5-inch diameter steel casing and security cover, set in a 2-ft square concrete pad. Well completion diagrams are provided in Appendix A.

2.4 Sub-Slab Probes

In addition to the soil vapor wells, four sub-slab probes were installed approximately 5 ft inside four different entrances of building A47 on February 7, 2007. Each of the sub-slab probes were installed adjacent to one soil vapor well location as shown in Figure 2-1. Sub-slab probe IR73-SSP1 is located inside the doorway of an administrative office. Two sub-slab probes (IR73-SSP2 and –SSP3) are located immediately inside two doorways of the open maintenance area. The fourth sub-slab probe, IR73-SSP4, is located inside a doorway of a metal shop. Photos of the sub-slab probes are provided in Appendix B.

2.4.1 Installation

A 3/8-inch diameter hole was drilled through the concrete floor of Building A47. The concrete slab extended to a depth of approximately 4 ft. Once the sub-surface was reached, the drill bit extended an additional 3 inches in order to create a void that is free of obstruction that might plug the hole during sampling. Once the total depth had been reached, a ¼-inch stainless steel tube with probe union (¼-inch swage lock and 1/8-inch female national pipe thread [NPT]) was measured and installed to depth. The height of the metal pipe was cut to be equal with the concrete surface. A removable plug was installed to minimize the effects of surface infiltration. Mortar was applied to and around probe fittings in order to create an air tight seal.

2.4.2 Pressure Measurement

A magnehelic gauge with spans of 0.0 to 0.25, 0.25 to 0.50 was plumbed together in order to yield pressure readings from each individual gauge. This gauge was zeroed before each reading by exposing the release valve to the atmosphere. Once the plug was removed from the sub-slab probe, the magnehelic gauge was screwed into the 1/8-inch female NPT. Pressure readings could then be recorded once an airtight seal was achieved. These measurements were collected during each sampling event and throughout the operation of the air sparge and ozone system to evaluate changes between subsurface and indoor air pressures. All readings that were collected prior to the system start-up and throughout the pilot study remained at 0 inches water.

2.5 System Installation and Operation

The air/ozone sparge system was transported to Site 73 on December 11, 2006. Photographs documenting the placement of the system are provided in Appendix B.

2.5.1 Equipment

The compressed air system consisted of the components listed in Table 2-1.

TABLE 2-1
Compressed Air System Components

Description
Kaeser BSD-50 (50 hp, 83 full load amps) rotary screw compressor, 460V/3-phase/60Hz, air-cooled, 125 psig maximum
KLS-250 Liquid Separator and Auto-Drain
400-gallon vertical ASME air receiver
GC-220 gas cooler to cool the air to +40°F
Sierra 640S Insertion Type Thermal Mass Flowmeter
Cold coalescing filter mounted and piped
JW 0200 Pre filter for above dryer with auto drain and delta p gauge
Aquamat 4 oil/water separator for use with the condensate
1-1/2 inch Arrow model R-3912, 700 cfm regulator, and gauge
GC-100 100 cfm +40° refrigerated air dryer for the 30 cfm requirements ½ " regulator and gauge

ASME - American Society of Mechanical Engineers
cfm – cubic feet per minute
^{o}F – degrees Fahrenheit
Hp - horsepower
Hz – Hertz
V – Volt
psig – pounds per square inch gauge

The ozone system consisted of the components listed in **Table 2-2**.

TABLE 2-2
Ozone System Components

Description
Ozonia ozone generator unit, 460V/3-phase/60Hz, 23 full load amps, 60 ppd ozone generation at 3 percent concentration by weight, requiring 18.3 scfm at minus 100 ^{o}F, 30.0 PSIG. Includes PLC and OMI display.
Zarsky ACWC-90-E 41-gallon air cooled closed loop chiller, 26 full load amps, to provide cooling water to the ozone generator. Rated at 90,000 BTU/hr.
Sensidyne low concentration ozone monitoring system for ambient ozone monitoring
Hankinson Pressure Swing Regenerative Twin Tower Desiccant Dryer
In-USA medium/high concentration ozone monitoring system for the outlet of ozone generator.
Sierra 640S Insertion Type Mass Air Flow Meter
Master control panel, with all necessary interlocks to operate the ozone sparge system
3 booster pumps, 4-head 316 Stainless steel compressor with 3-Ply Teflon Diaphragms

^{o}F – degrees Fahrenheit
BTU – British thermal unit
mA – milliAmpere
OMI – Operator Machine Interface
PLC – Programmable Logic Controls
ppd – pounds per day
psig – pounds per square inch gauge
scfm – standard cubic feet per minute
V – Volt

The ozone generator with supporting equipment, and air compressor with supporting equipment were housed in separate steel shipping containers, each measuring 8 feet by 20 feet.

2.5.2 Air Sparge System Operation

The air sparge system was activated on February 15, 2007. The compressed air system was operated continuously for approximately 12 months, 24 hours a day, 7 days a week, except for scheduled maintenance, power failures, or groundwater sampling events. During the period of February 15, 2007 through March 13, 2008, the compressor "up time" was approximately 91 percent (based on run time hours recorded on the compressor programmable logic control [PLC]). During the first phase of the pilot study, the compressed air system was operated without ozone, to establish baseline performance of air sparging alone, without ozone enhancement. Due to mechanical problems, the ozone system did not operate until 6 months after startup of the sparge system (compressor).

Sparging was initiated at relatively low flow rates (70-90 scfm) to avoid artesian conditions at the monitoring wells, because of the shallow depth to water and significant water table uplift (over 6 ft in some cases) associated with air sparging. Porous polyethylene "breather" caps were placed on some of the monitoring wells to allow trapped air to escape. The air compressor was temporarily deactivated 5 days after start-up to fit additional "breather caps" on wells as far as 300 ft from the sparge well. Because of the dense cemented sand zones at depth, sustained water table mounding occurred at Site 73, which limited ultimate flow rates. Sparge flow rates were increased in 20 cfm increments per week until a maximum flow of approximately 140 cfm was achieved. Additional increases in flow generally resulted in artesian conditions, even in wells with the "breather" caps fitted. Maximum pressure during start-up was approximately 45 psi, decreasing to about 36 psi at steady state. The nine psi difference in sparge pressure (start-up vs. steady state) is indicative of the relatively low permeability of the formation.

Operational parameters, including compressed air flow (measured using a thermal mass air flow sensor) and operating pressure, were recorded on a weekly basis for the first month of operation and monthly thereafter. The compressed air system operation parameters are summarized in **Table 2-3**.

TABLE 2-3
Steady State Compressed Air System Operational Parameters

Compressed air flow rate: 140 scfm
Compressor Operating Pressure: 120 psig
Injection pressure: 36 psig (measured at the mixing tee)
Injection temperature 45 ^{o}F (post cooler)

^{o}F – degrees Fahrenheit
scfm – standard cubic feet per minute
psig – pounds per square inch gauge

2.5.3 Ozone System Operation

The ozone system was activated on August 13, 2007, after delays associated with an air conditioning malfunction and booster pump interlock issues. The combined system was designed to operate continuously (24 hours a day, 7 days a week), for a period of nearly 7 months, from August 13, 2007 through March 13, 2008. Run-time for the ozone generator was recorded via PLC. Ozone system operational parameters are summarized in **Table 2-4**.

TABLE 2-4
Ozone System Operational Parameters

Compressed air feed to generator (cool, dry, filtered air): 18 scfm
Ozone production at 100% capacity (measured at generator outlet): 47 g/m^3 (26,300 ppm_v)
Ozone production at 100% capacity (measured after the blending tee) 7.5 g/m3 (4200 ppm_v)
Ozone generator pressure: 2 bar (29 psig)
Average chiller water flow rate: 8 gpm
Injection temperature 45 ^oF

^oF – degrees Fahrenheit
g/m^3 – grams per cubic meter
gpm – gallons per minute
ppm_v – parts per million by volume
psig - pounds per square inch gauge
scfm – standard cubic feet per minute

During the first 4 weeks of ozone generator operation, the output of the ozone generator was slowly increased from five percent capacity to 100 percent capacity, beginning August 13, 2007, and extending through March 17, 2008. The ozone generator operated for approximately 61 days, generating an average of 82.5 pounds of ozone per day, for a total loading of approximately 4,640 pounds of ozone. Cumulative ozone production is shown in Figure 2-2.

Power interruptions at the Base occurred periodically during system operation, and often caused the PLC to short-out. Because the ozone generator required a manual re-start, it often remained deactivated for several days after a storm or power surge. In an attempt to address this problem, first tier cascading surge protection was installed in late October 2007, consisting of primary transient voltage surge suppression (TVSS) for the 480V power source; secondary TVSS for 120V power to the control panel; an isolation transformer in the control panel; and a lightning arrestor. Despite these measures, operation of the ozone generator remained inconsistent. However, the majority of the mechanical problems occurred early on in the test, and generally decreased in frequency with continued operation. The system was deactivated for a minimum of 48 hours prior to groundwater sampling to mitigate potential exposure of ozone gas and/or ozonated water to field staff, and remained deactivated during the entire sampling event. The generator was deactivated to conclude the test on March 13, 2008.

\\aphrodite\proj\USNavFaceNGCom\CampLejeune\MapFiles\Site_73\Site_73_Pilot_Study_Report\Figure_2_1_Horizontal_Sparge_Well_and_MW.mxd

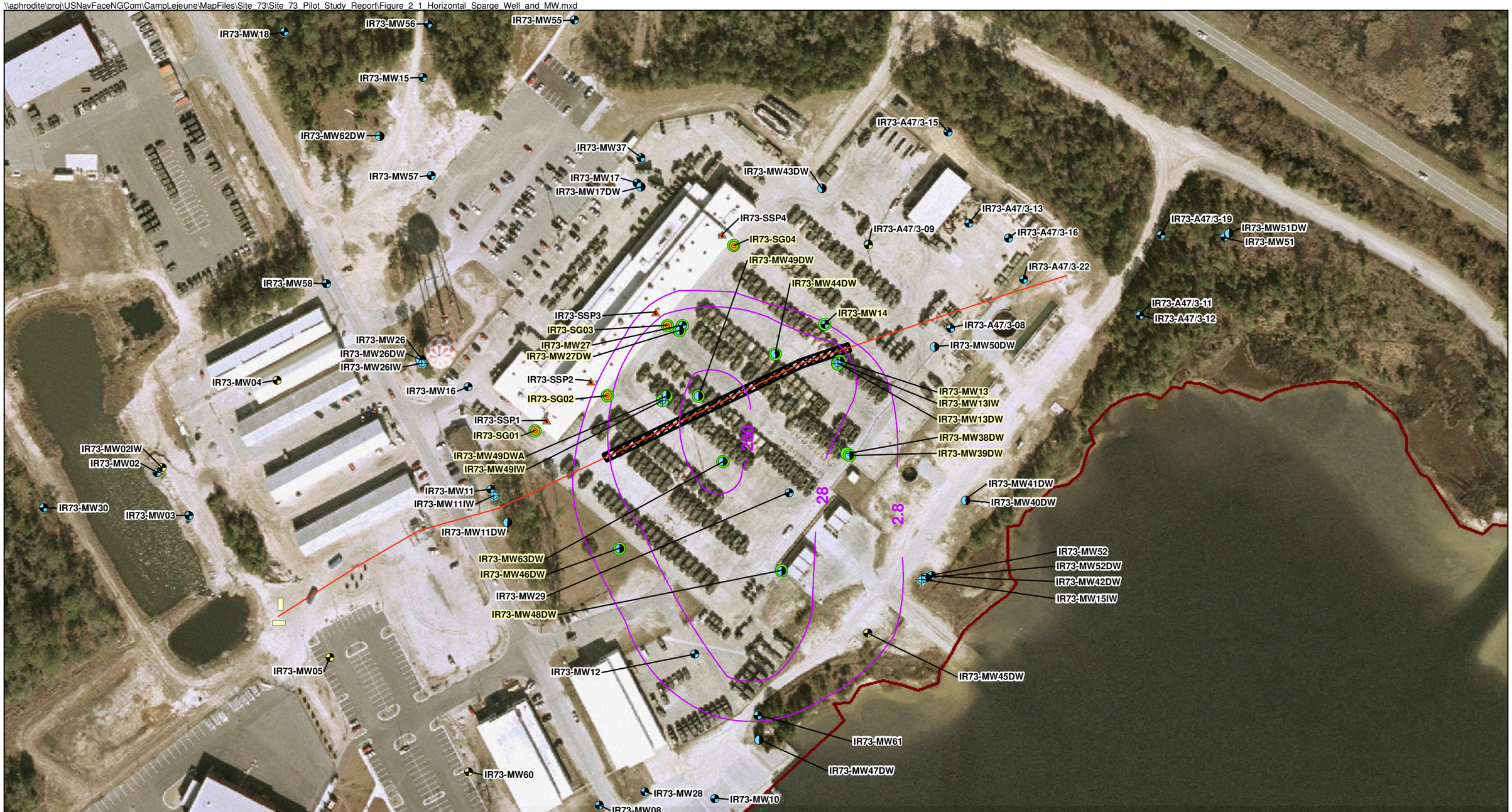

Legend

- Shallow Monitoring Well
- Intermediate Monitoring Well
- Deep Monitoring Well
- Abandoned Monitoring Well - Needs Field Verification
- Damaged Monitoring Well - Needs Field Verification
- Pilot Test Sub-Slab Probe
- Pilot Test Soil Gas Well
- IR73-MW49DW Pilot Test Groundwater Monitoring Well
- TCE Contours
- Horizontal Well
- Slotted Section of Horizontal Well
- Air and Ozone Sparge Containers
- Base Boundary

N

0 75 150 300 Feet

1 inch equals 150 feet

Figure 2-1
Horizontal Sparge Well and Monitoring Well Locations
Site 73 Pilot Study Report
MCB Camp Lejeune
North Carolina

AGVIQ CH2M HILL

Figure 2-2
Cumulative Ozone Production
Pilot Study Report, Site 73, MCB Camp Lejeune

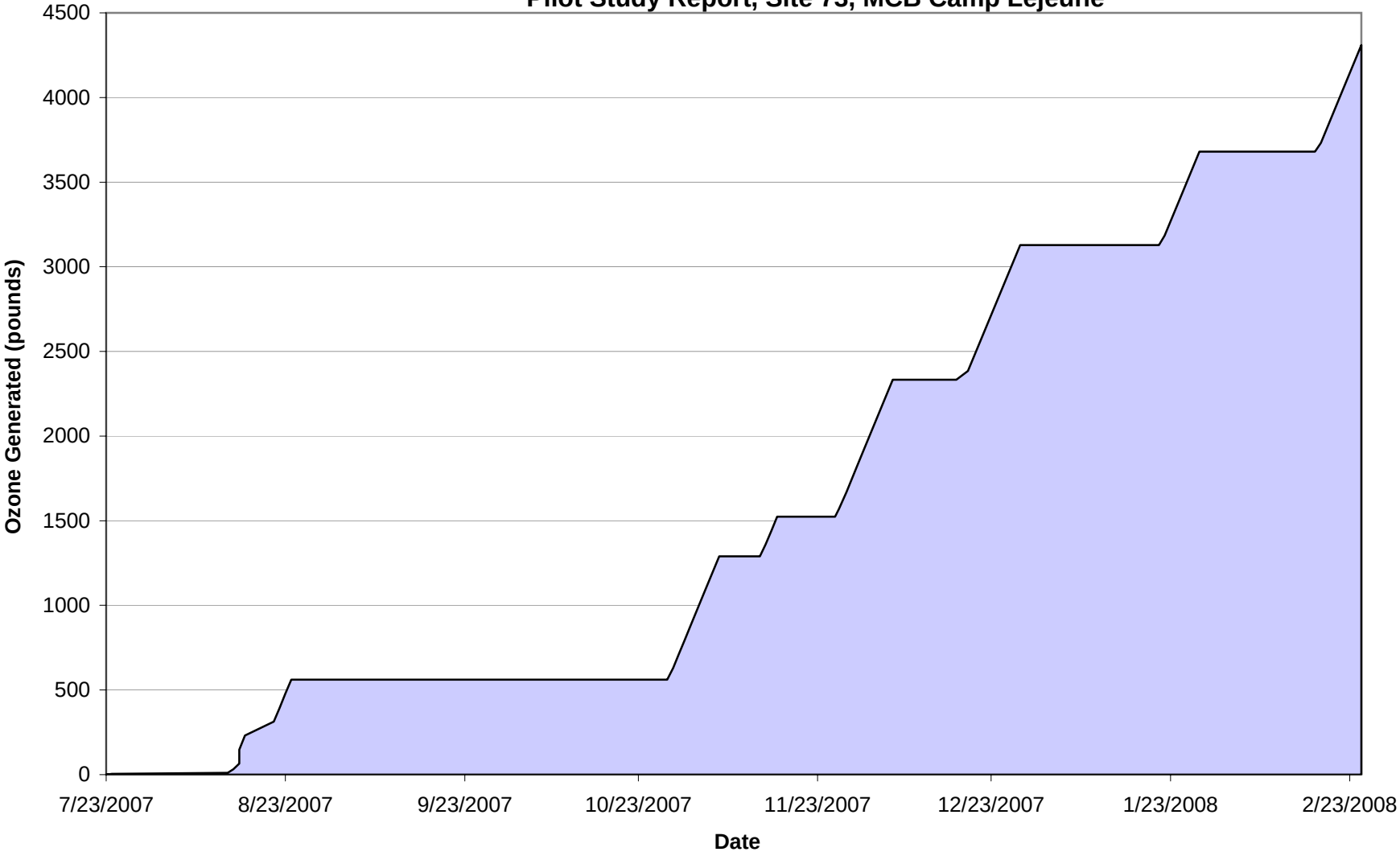

SECTION 3

Pilot Study Monitoring

3.1 Monitoring

To measure the effectiveness of the study, groundwater and soil vapor monitoring was conducted. Various parameters were collected and evaluated. Each media and parameter that was monitored is discussed in this section.

3.1.1 Groundwater Monitoring

To measure study performance, groundwater monitoring was conducted throughout the project. Monitoring included baseline monitoring and then quarterly after startup. A total of 13 monitoring wells were monitored. Light non-aqueous phase liquid (LNAPL) was detected in monitoring well 73-MW14 during the baseline and first quarterly event; this well was no longer sampled after the first quarterly event due to the presence of non-aqueous phase liquid (NAPL) in the well. The analytical results from these sampling events are presented in Appendix C.

All groundwater monitoring activities were conducted in accordance with the Field Sampling Plan (FSP) contained in the Work Plan (CH2M HILL, 2004), as summarized below.

Water Level Measurements

Prior to sampling, the static water level in each well was measured to within 0.01 feet using an electronic water level indicator. The water level trends are presented in Figure 3-1.

Sample Collection

Each well was purged using low-flow techniques. Water quality parameters including pH, specific conductivity, turbidity, dissolved oxygen (DO), temperature, and oxidation-reduction potential (ORP) were measured during the purging process using a calibrated Horiba U-22 water quality meter.

Groundwater samples were collected using a peristaltic pump and Teflon® tubing. Samples were collected in appropriately labeled containers, immediately packed on ice in coolers, and shipped via overnight delivery to Empirical Laboratories, LLC in Nashville, Tennessee for analysis of VOCs using EPA method 8260B. Groundwater samples remained in the presence of a AGVIQ-CH2M HILL Joint Venture 1 (JV 1) project representative until delivery to the Federal Express location. A chain-of-custody (COC) record was used to maintain a record of personnel who had contact with the samples.

3.1.2 Soil Vapor Monitoring

Soil vapor samples were collected from four locations during each groundwater monitoring event to monitor indoor air quality near building A-47.

Soil vapor samples were collected with a Summa canister by attaching Teflon tubing to a stainless steel vapor probe. Pressure readings were collected at each location with a magnehelic gauge.

Samples were collected in appropriately labeled containers, immediately packed on ice in coolers, and shipped via overnight delivery to CH2M Hill Applied Science Laboratory in Corvallis, Oregon for analysis. Soil vapor samples remained in the presence of a JV I project representative until delivery to the Federal Express location. A COC record was used to maintain a record of personnel who had contact with the samples. Samples were submitted for analysis of VOCs. Analytical results from the soil vapor monitoring event are contained in Appendix D.

3.2 Groundwater Analytical Results

3.2.1 Volatile Organic Compounds

The contaminants of concern within the Site 73 pilot study area are TCE, cis-1,2 DCE, and vinyl chloride. Analytical results are presented in Appendix C and discussed in the following sections. The analytical results in the following sections are discussed with respect to depth of sampling. Table 3-1 contains the monitoring well construction for the wells used in the study.

TABLE 3-1
Monitoring Well Construction

Well ID	Well Depth (ft)	Screen Length (ft)	Screen Interval (ft bgs)
IR73-MW13	18	15	3-18
IR73-MW13DW	70	19	52-71
IR73-MW14	18	15	3-18
IR73-MW27	18	13	3-16
IR73-MW27DW	75	10	65-75
IR73-MW38DW	110	10	100-110
IR73-MW39DW	70	10	60-70
IR73-MW44DW	70	10	60-70
IR73-MW46DW	75	10	65-75
IR73-MW48DW	75	10	65-75
IR73-MW49DW	75	10	65-75
IR73-MW49DWA	127	5	122-127
IR73-MW49IW	55	10	45-55

Shallow Groundwater Analytical Results

TCE and cis-1,2 DCE, and vinyl chloride concentration trends associated with shallow monitoring wells (73-MW27 and 73-MW13) are presented in Figure 3-2. The shallow wells are 16 to 18 ft deep.

During the baseline sampling event, TCE and cis-1,2-DCE concentrations within the shallow monitoring wells were generally below the NCGWQS. However, TCE and Cis-1,2-DCE concentrations increased 3 months after start up of the air sparge system (July 2007). VC concentrations remained relatively stable at 73-MW13 but increased slightly (from baseline of 0.64J µg/L to 1.6J µg/L during the 12 month event) at 73-MW27. VC concentrations were above the NC2LGW throughout the duration of the study. Concentrations of TCE and cis-1,2-DCE in monitoring well 73-MW13 remained below the NC2LGW. Monitoring well 73-MW27 had concentrations of TCE and cis-1,2-DCE that increased above the NC2LGW. 73-MW27 is located approximately 150 ft away from the horizontal well.

Intermediate Groundwater Analytical Results

There was one intermediate-depth well monitored within the pilot study area (73-MW49IW). This well is screened at a depth of 55 ft and is located over the horizontal well.

The TCE concentration in MW49IW decreased 92 percent over the duration of the test, from 990 µg/L to 76 µg/L. However, the daughter product concentrations did not decrease in a similar ratio, with DCE reduced by 44 percent (1,000 µg/L to 560 µg/L) and VC increasing by 13 percent (38 µg/L to 43 µg/L). During the study, DCE results increased before decreasing later in the final monitoring round. The TCE, DCE, and VC concentration trends are presented in Figure 3-3. The long-term trends for 73-MW49IW show continued TCE reduction with a subsequent spike and decrease of DCE. Some reduction was evident during the hydrogen sparge test, but concentrations later rebounded. Subsequent air sparging accelerated TCE reduction.

Deep Groundwater Analytical Results

There were nine deep monitoring wells sampled within the pilot study area. These wells are screened at a depth of approximately 75 ft bgs. The wells are located anywhere from over the screened section of the HDD well (73-MW49DW) and up to 275 ft away (73-MW48DW). Monitoring well 73-MW49DW exhibited the highest contaminant concentrations at the beginning of the pilot study, as well as historically.

Reduction of TCE concentrations in the deep wells averaged 75 percent. TCE was reduced in all wells, with the exception of 73-MW27DW (2.9 µg/L to 72 µg/L). Monitoring well 73-MW27DW is located approximately 150 ft away from the horizontal well. Monitoring well 73-MW49DW, with the highest initial concentration, had TCE reduced by 97 percent (1,100 µg/L to 30 µg/L).

In examining the DCE and VC concentrations over time, a similar reduction is not seen. DCE concentrations increased, while VC concentrations remained relatively constant, for all the deep wells. Figure 3-4 depicts TCE concentration trends for all deep monitoring wells during the study. Figure 3-5 depicts average TCE, DCE, and VC concentrations for the deep wells. Finally, Figure 3-6 shows long-term TCE, DCE and VC concentration trends for 73-MW49DW.

The long-term trends for 73-MW49DW show continued TCE reduction, with a recent increase in DCE. Some reduction was evident during the hydrogen sparge test, but the concentrations appear to begin to rebound. As in the case of the MW-49IW, subsequent air sparging accelerated TCE reduction and DCE generation.

3.2.2 Indicator Parameters

Field measurements of water quality parameters were collected during each monitoring event. These parameters were collected and used in the effectiveness evaluation of the system and estimation of the zone of influence of air sparging around the horizontal well. Field measurements included pH, conductivity, DO, turbidity, temperature, and ORP. Water quality parameters are presented in the table in Appendix E and discussed in the following sections.

Dissolved Oxygen

Elevated levels of DO in groundwater samples are used as an indicator of the zone of influence of the sparge system. Average DO concentration trends within the pilot study area shallow, intermediate, and deep wells are presented in Figure 3-7. The DO concentrations from the deep monitoring wells are presented in Figure 3-8. The dissolved oxygen data shows a gradual increasing trend in response to air sparging, with a slightly more pronounced upward trend after ozone injection was initiated, as expected.

Prior to the start of the pilot study, DO concentrations for all pilot study monitoring wells ranged from 0.26 mg/L to 1.41 mg/L. Notable increases in DO concentrations were first observed during the March 2007 sampling event, conducted approximately 1 month after startup of the air sparge system.

Deep monitoring wells had the highest DO concentration during the September 2007 sampling event, conducted 6 months after system startup. The ozone generator was started approximately 1 month before the September sampling event, and most likely contributed to the increase in DO concentrations. The shallow and intermediate well did not exhibit a similar increase in DO levels until the following sampling event (December 2007). Deep wells are positioned approximately 10 to 20 feet above the horizontal well and were influenced more rapidly by addition of ozone. Approximately 12 months after the initial start up of the air sparge system, DO concentrations dropped back to the concentrations seen in the Baseline event (March 2007). The decrease in DO corresponds to an increased frequency of ozone generator inactivity and shutdown of the sparge system.

Oxidation-Reduction Potential

ORP was measured in the field during each monitoring event as an indicator of subsurface conditions. Increasing ORP values in groundwater samples are used as an indicator of zone of influence of the sparge system. Average ORP trends within the pilot study area in shallow, intermediate, and deep wells are presented in Figure 3-9. ORP results for the deep monitoring wells are shown in Figure 3-10.

Prior to the start of the pilot study, ORP ranged from -240 millivolts (mV) to -36 mV within the pilot study area. Over the course of the pilot study, ORP trends were erratic. Monitoring wells 73-MW49IW and 73-MW49DW had a slight decrease in ORP after 1 month of air

sparge operation (March 2007) and then continuously increased until 9 months after system start-up (December 2007). ORP increased in shallow monitoring well 73-MW13 until 3 months after start-up and then decreased to baseline conditions. Approximately 12 months after system activation, ORP (on average) returned to baseline conditions.

3.3 Soil Vapor Analytical Results

Soil vapor was monitoring at four locations along the outside perimeter of building A47. TCE concentrations in 73-SV01 ranged from 2.74 ppb_v (March 2007) to 208 ppb_v (July 2007). The TCE concentrations reduced back to baseline results during the December 2008 and March 2008 sampling events. IR73-SV02 did not have any detections of TCE. Soil vapor well IR73-SV03 and IR73-SV04 did not have any detections of TCE until September 2007, which was approximately 6 months after start-up of the air sparge system. TCE concentrations decreased throughout the remainder of the pilot study. The TCE concentration trends for each of the four soil vapor sampling wells are presented in Figure 3-11.

All soil vapor monitoring data was evaluated using the *Draft Guidance for Evaluating the Vapor Intrusion to Indoor Air Pathway from Groundwater and Soils* (USEPA, 2002). Soil vapor analytical results for TCE were evaluated against screening criteria based on site-specific soil gas attenuation factors. The attenuation factors listed in the USEPA guidance were determined using the Johnson and Ettinger (1991) model and a subset of the Unified Soil Classification System (USCS) soil texture classifications. Assuming an incremental lifetime cancer risk of 1×10^{-5}, the target action level screening value for shallow soil gas, using the semi-site-specific attenuation factor, was estimated to be 4,400 ppb_v for TCE. The TCE soil vapor concentrations, sampled throughout the entire pilot study, did not exceed this site-specific action level criteria.

3.4 Zone of Influence

During operation of the air sparge system, the distance of influence of the horizontal sparge well was evaluated quantitatively by dissolved oxygen measurements, and qualitatively by observations of bubbling in monitoring wells. Particularly during start-up, water table displacement associated with sparging would result in artesian or nearly artesian conditions at several monitoring wells, limiting the gas flow rate. Based on dissolved oxygen measurements in wells, the distance of influence associated with gas sparging at Site 73 was approximately 125 ft.

3.5 Discussion of Results

Based on evaluation of the data, a combined effect of mass transfer (air stripping) with some degree of biodegradation (enhanced reductive dechlorination [ERD]) appears to have occurred during the course of the study period. Available data suggest that a cemented sand layer(s) (as evident in Figures 1-4 and 1-5) diverted a significant volume of sparged air laterally through deeper portions of the aquifer, resulting in less than adequate penetration of the intermediate and/or shallow zones. Evidence for this effect includes disproportionately high dissolved oxygen and contaminant reductions in deep monitoring wells (plus the one intermediate well), relative to the shallow wells.

Evidence for ERD includes increases in cis-DCE levels over time, particularly in the shallow monitoring wells. ERD may have occurred in pockets or zones of the aquifer not directly contacted by air sparge channels, hence retaining a low DO/ORP level suitable for anaerobic biological activity. High flow "burst" or pulse sparging may further benefit this process, at the risk of causing artesian conditions in monitoring wells. Conditions were generally favorable for ERD, with negative ORP and DO falling to less than 1 mg/L.

It is expected that ozone generator up-time could likely be significantly enhanced by implementation of second tier (multi-stage) surge suppression, since Base power in the area of Site 73 seems to be susceptible to power fluctuations.

Presence of dense cemented sand zones exacerbates water table uplift or "mounding", since sparged air cannot readily penetrate these dense materials, and is therefore diverted laterally in some cases. Sparge pressures during start-up were nearly 10 psi higher than those associated with approximate steady state conditions. A similar delayed response for TCE removal in shallow wells was observed during the test at Site 86. However, the sparge well at Site 86 was considerably shallower, and cemented sand layers did not appear to be as dense/thick.

Figure 3-1
Water Level Trend
Pilot Study Report, Site 73, MCB Camp Lejeune

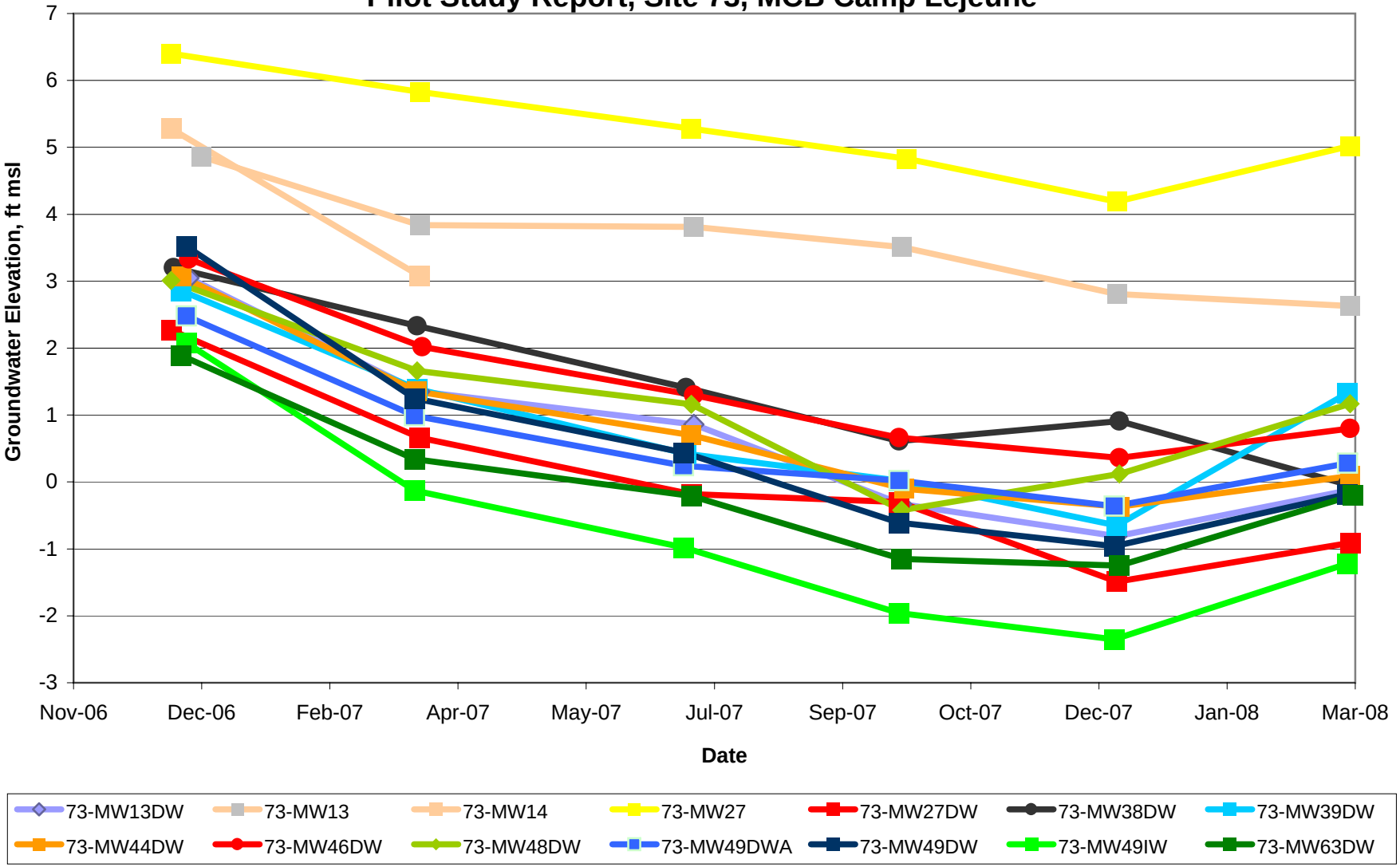

Figure 3-2
Average Shallow Well Results
Pilot Study Report, Site 73, MCB Camp Lejeune

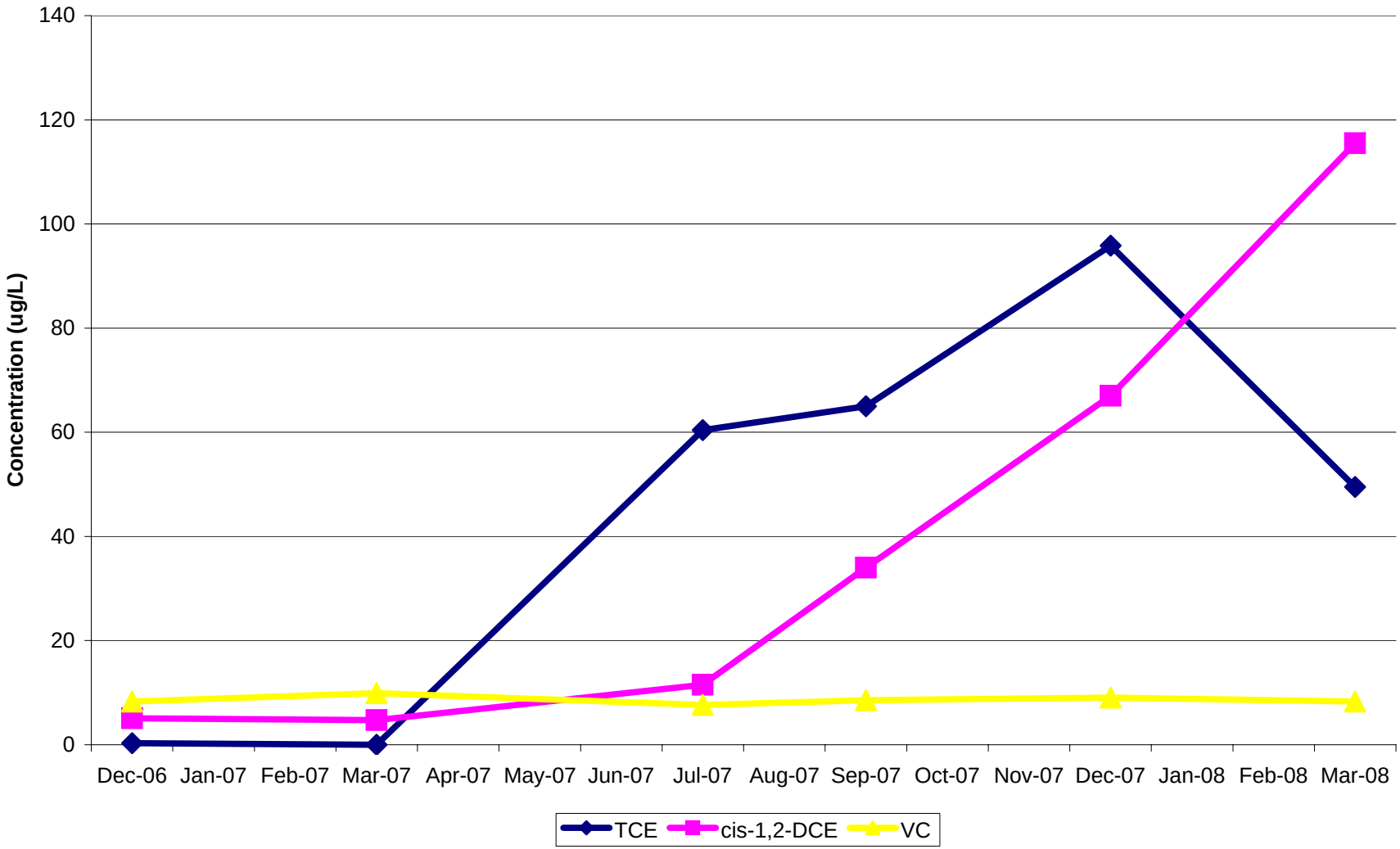

Figure 3-3
IR73-MW49IW Results
Pilot Study Report, Site 73, MCB Camp Lejeune

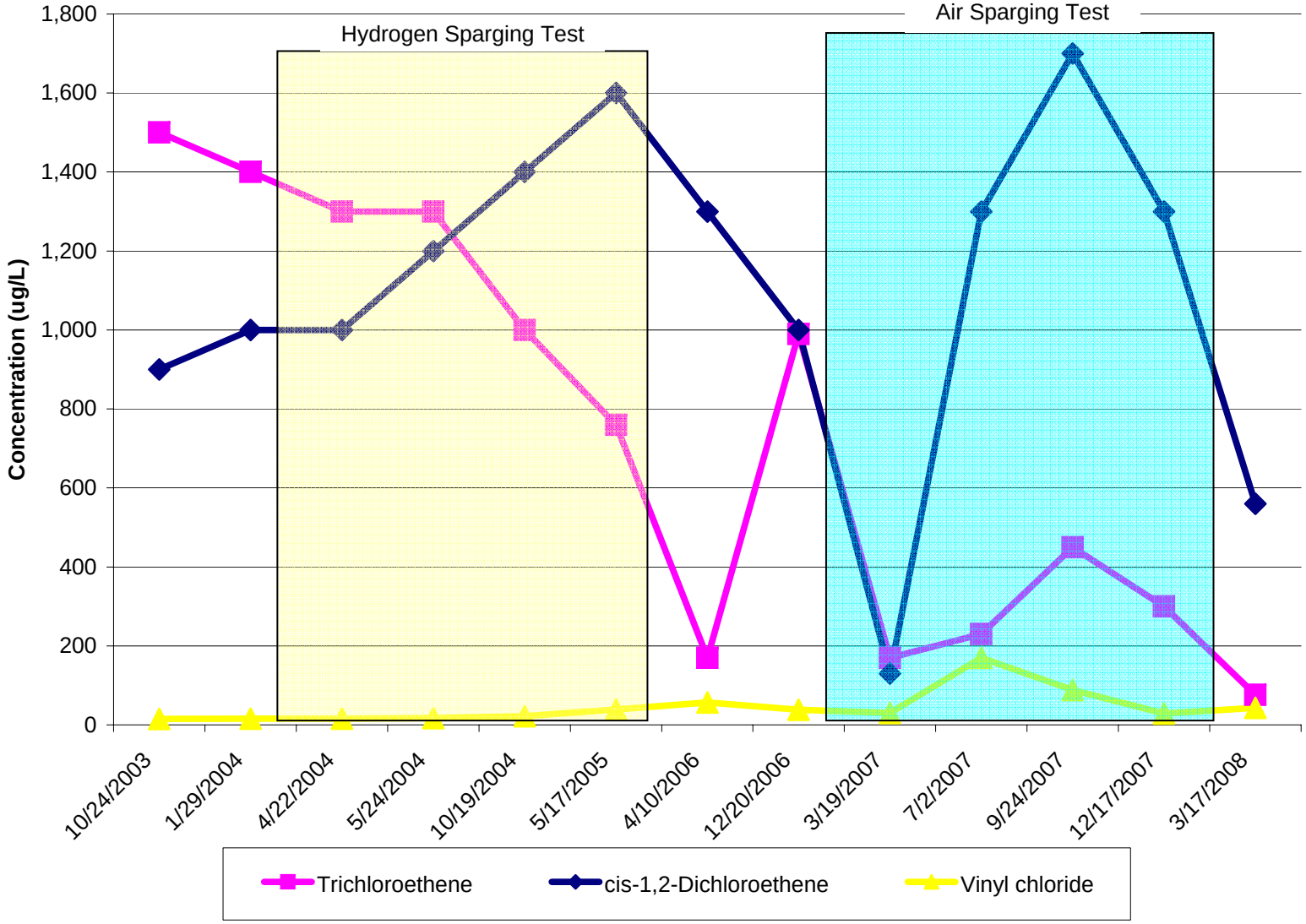

Figure 3-4
TCE Concentrations in Deep Wells
Pilot Study Report, Site 73, MCB Camp Lejeune

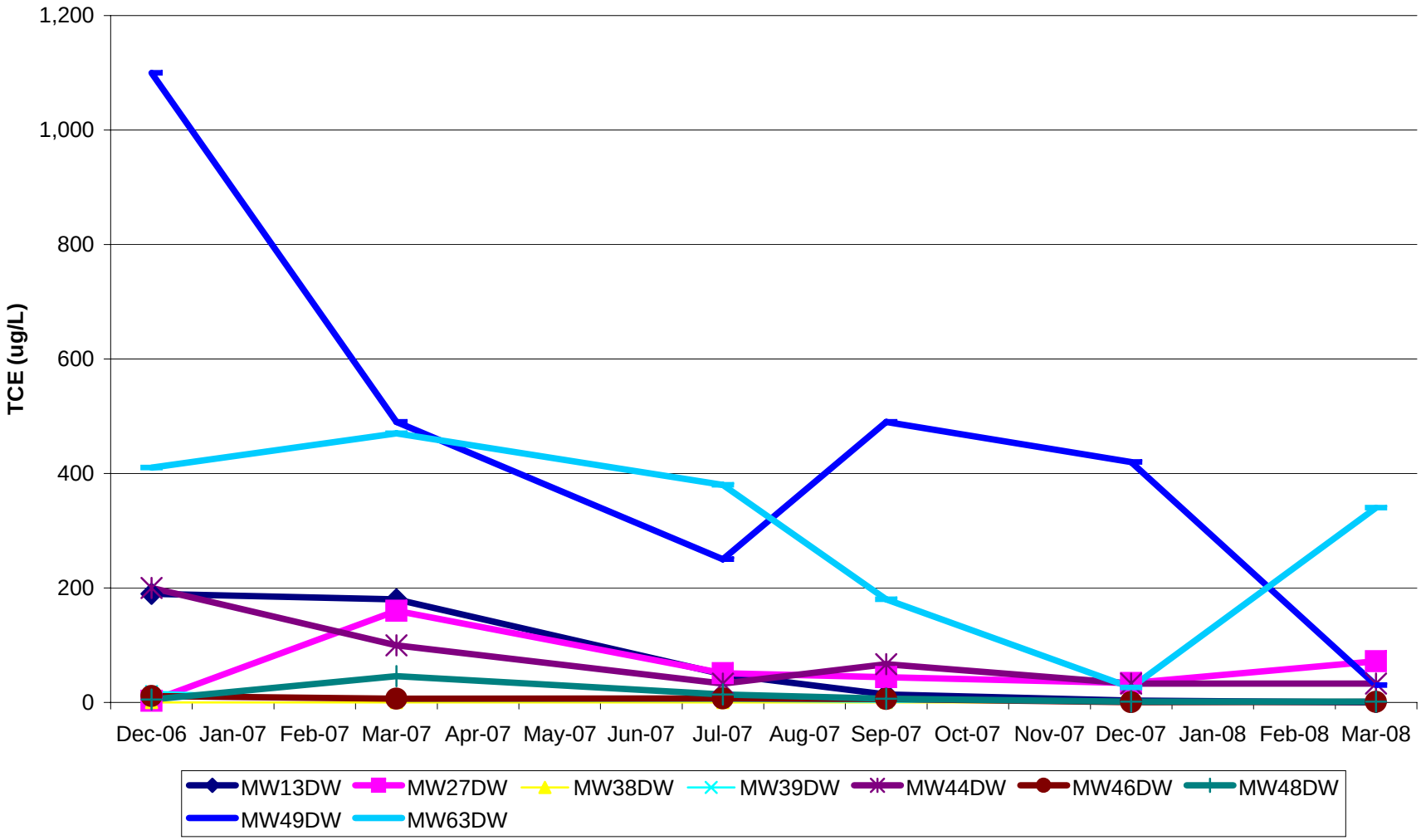

Figure 3-5
Average Deep Wells Concentrations
Pilot Study Report, Site 73, MCB Camp Lejeune

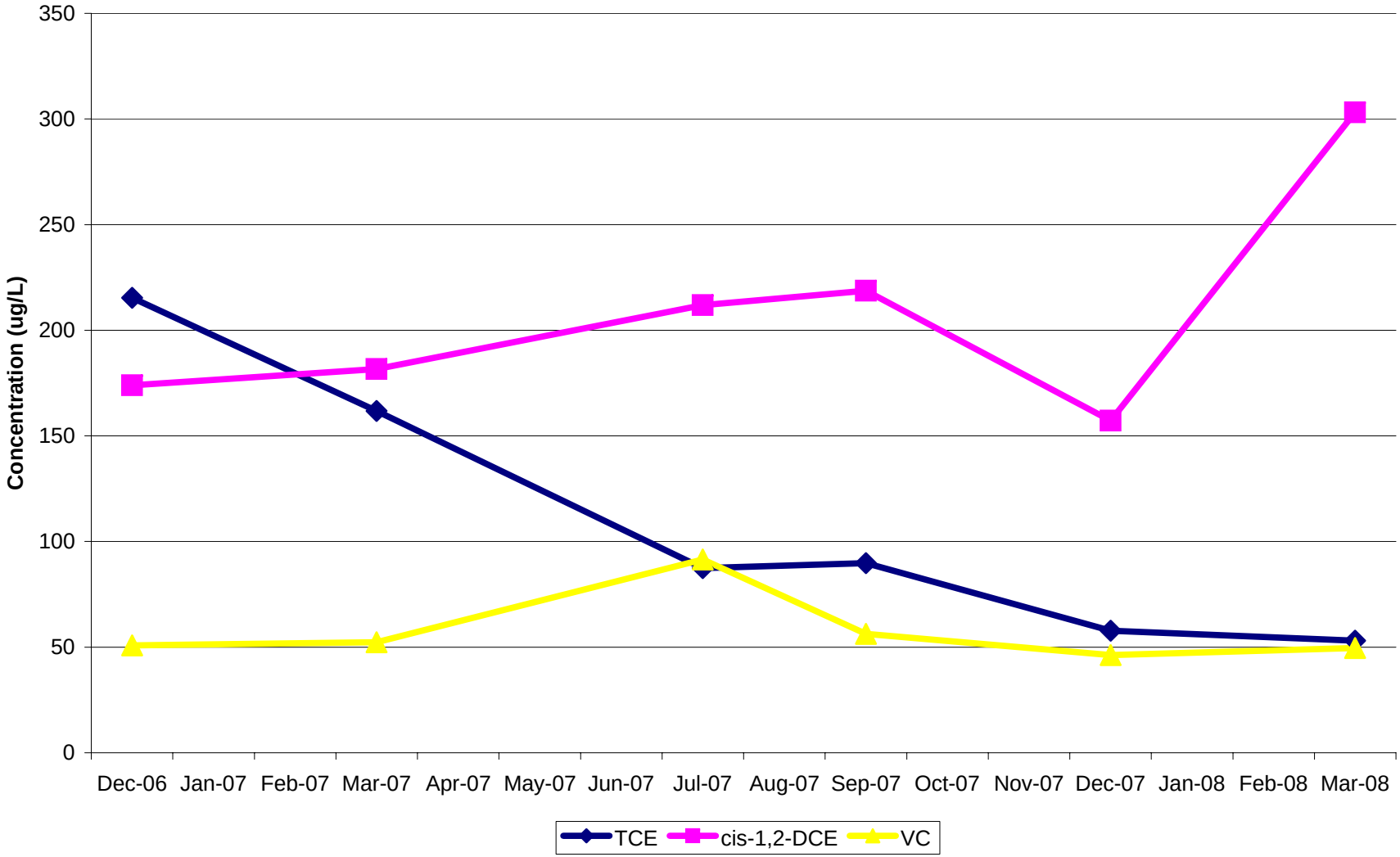

Figure 3-6
IR73-MW49DW Results
Pilot Study Report, Site 73, MCB Camp Lejeune

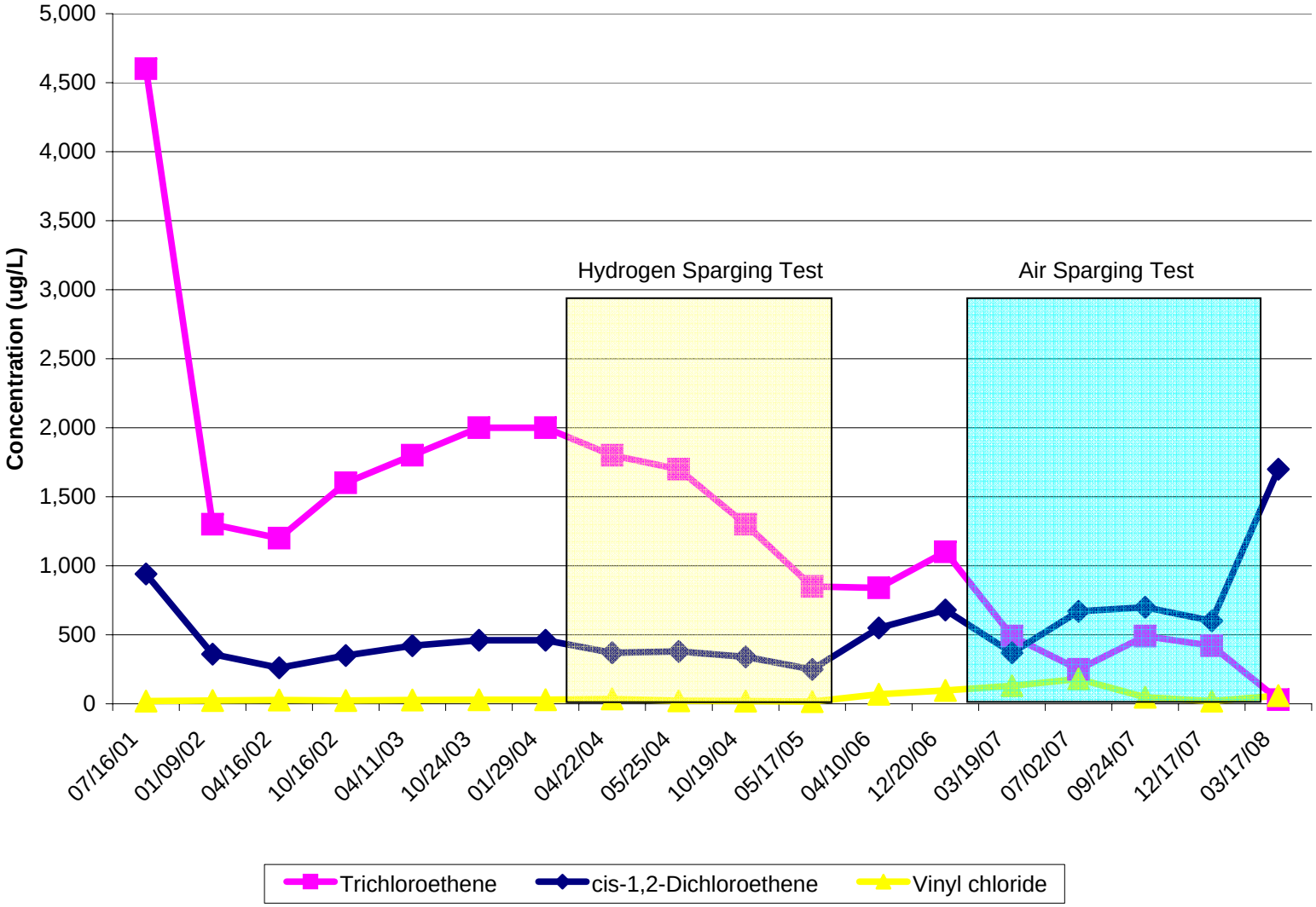

Figure 3-7
Average Dissolved Oxygen Levels
Pilot Study Report, Site 73, MCB Camp Lejeune

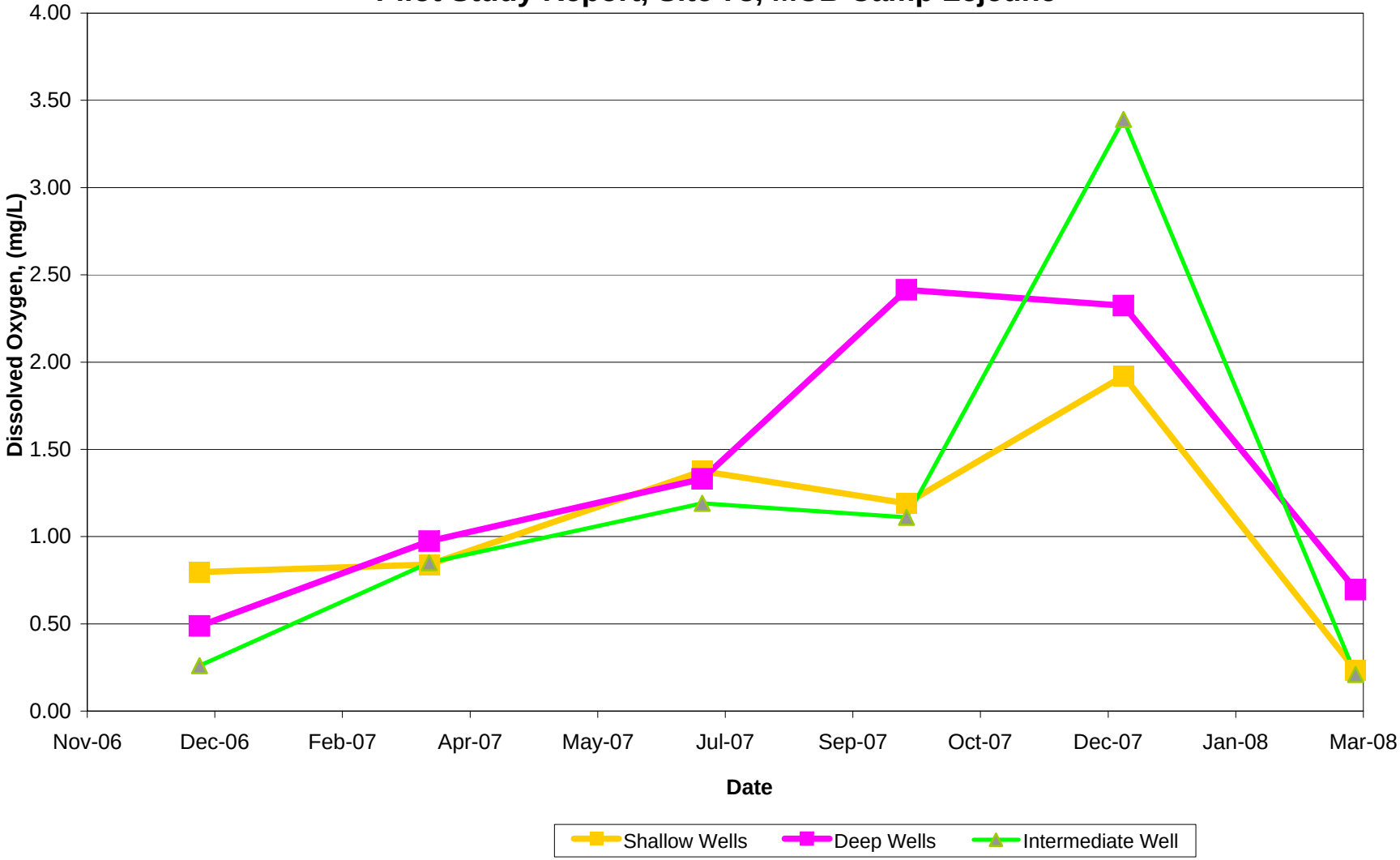

Figure 3-8
Dissolved Oxygen Levels in Deep Wells
Pilot Study Report, Site 73, MCB Camp Lejeune

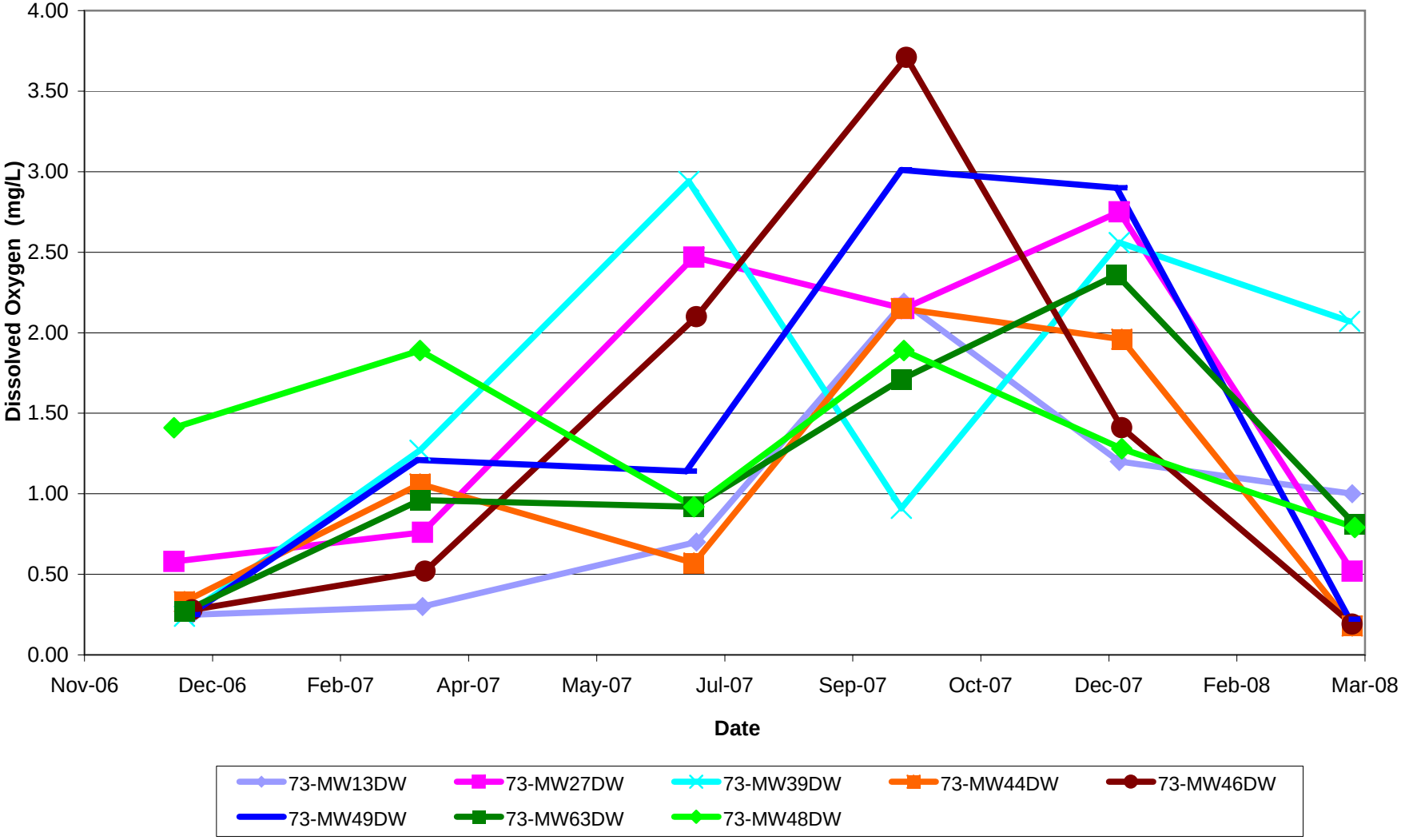

Figure 3-9
Average Oxidation Reduction Potential in Wells
Pilot Study Report, Site 73, Camp Lejeune

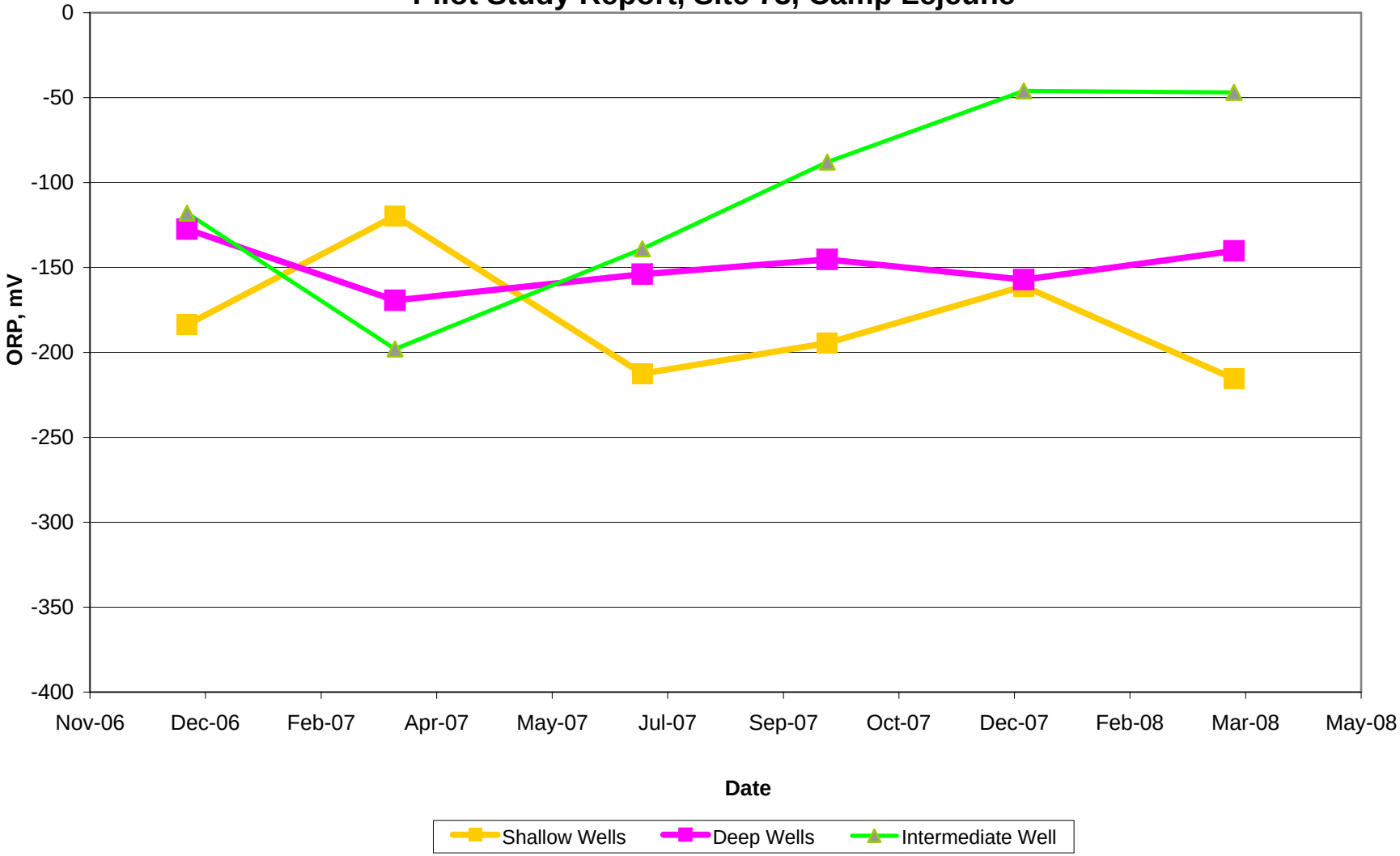

Figure 3-10
Oxidation Reduction Potential in Deep Wells
Pilot Study Report, Site 73, MCB Camp Lejeune

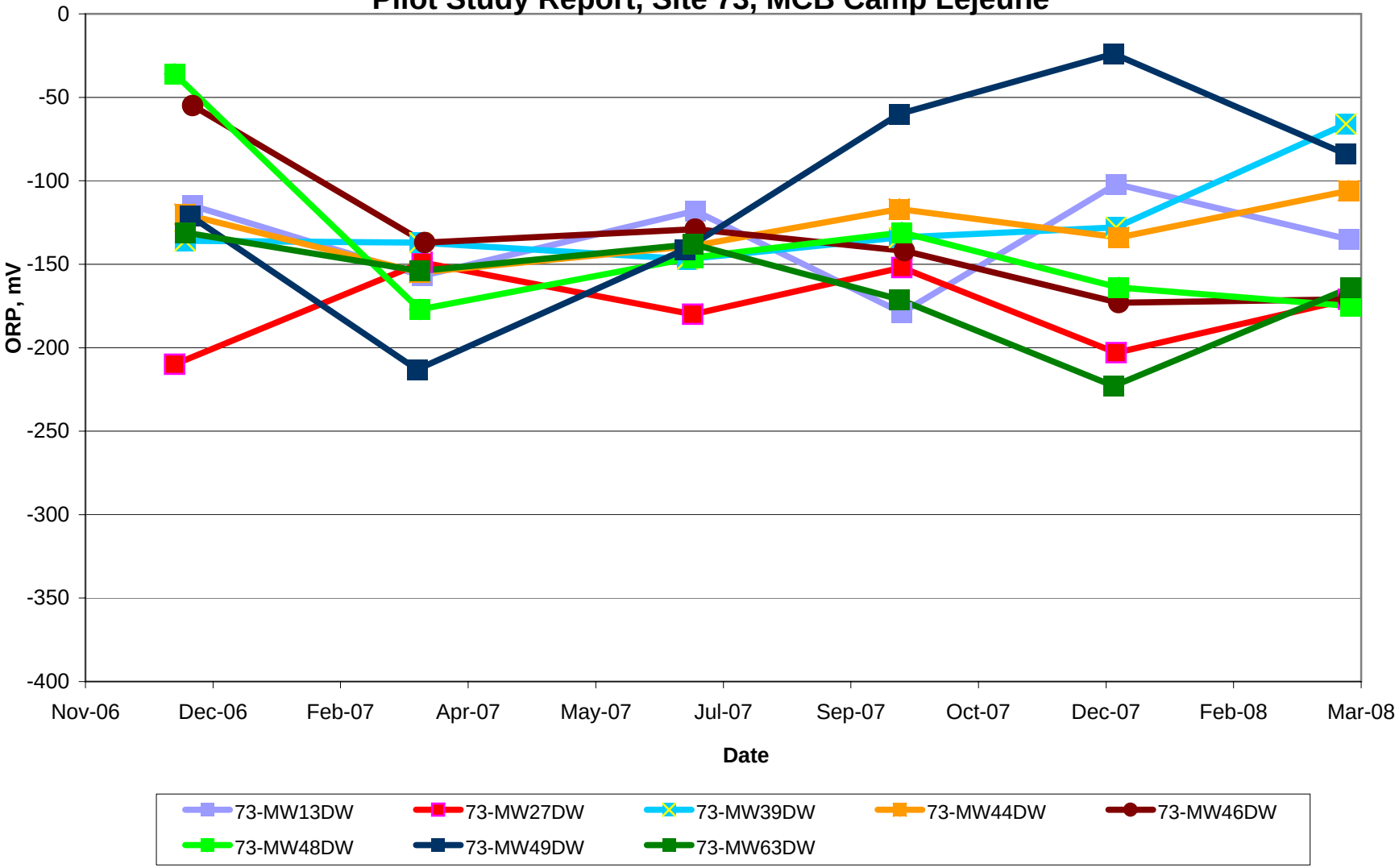

Figure 3-11
Trichloroethene Concentration Trend in Soil Vapor Wells
Pilot Study Report, Site 73, MCB Camp Lejeune

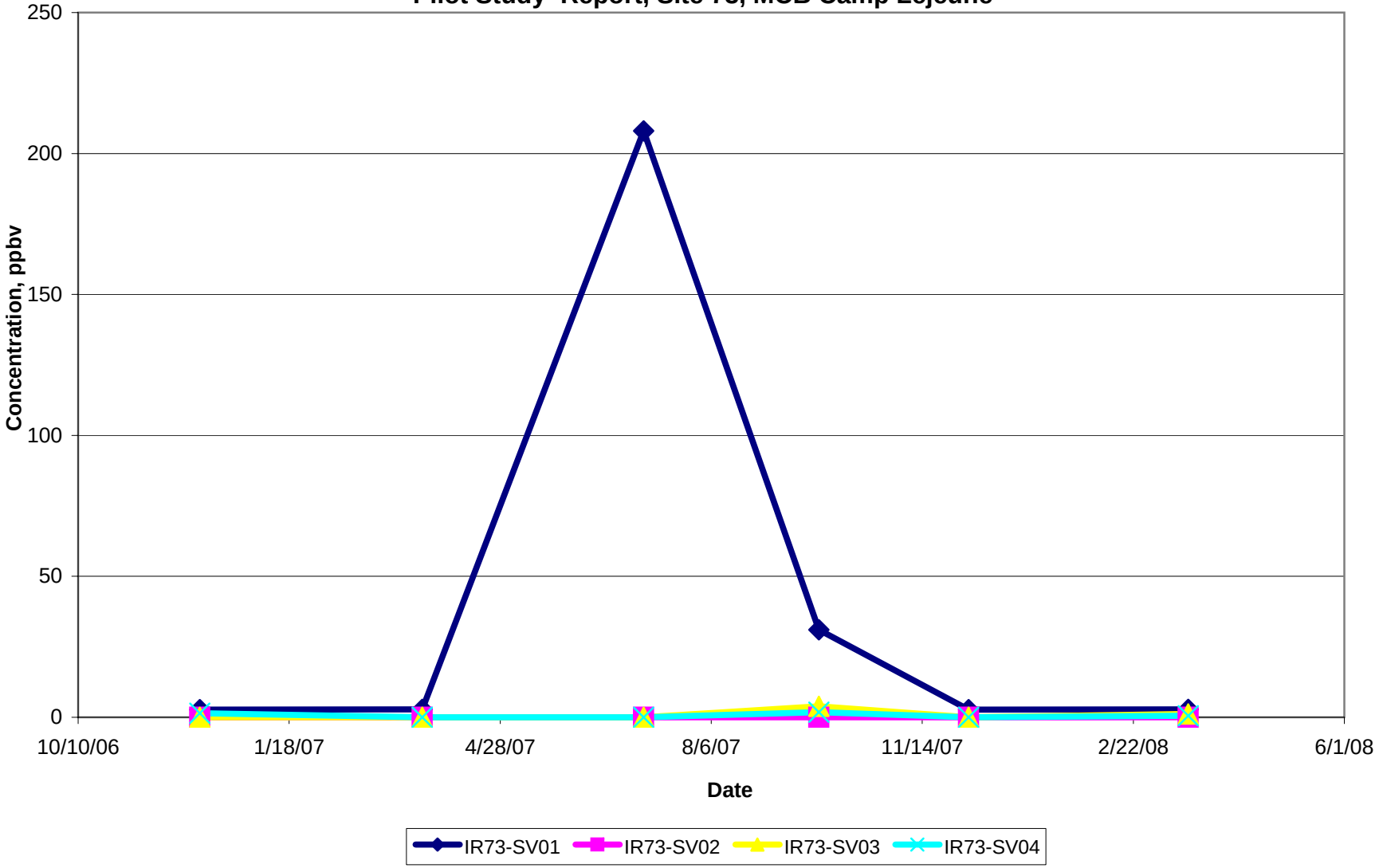

SECTION 4

Conclusions

This section summarizes observations and lessons learned throughout the course of the Site 73 pilot study.

4.1 Observations

Observations made based on the results of the Site 73 pilot study are as follows:

- TCE concentrations were reduced 75 percent in groundwater samples collected from monitoring wells with baseline concentrations exceeding 1,100 µg/L.
- Within 1 year, the NCGWQS for TCE had been achieved in 7 of the 13 monitoring wells sampled as part of the pilot study.
- TCE concentrations in the one intermediate depth well (73-MW49IW) monitored throughout the pilot study had a 93 percent reduction. TCE was reduced from 990 µg/L to 76 µg/L.
- Average TCE concentrations increased in the shallow monitoring wells from less than 1 µg/L to 49.5 µg/L.
- Average TCE concentrations in the deep monitoring wells decreased 75 percent (215 µg/L to 53 µg/L)
- Conversely, the average DCE concentrations increased by 75 percent in the deep wells (174 µg/L to 304 µg/L).
- Average vinyl chloride concentrations were relatively constant through the test (50.9 µg/L to 51.7 µg/L)
- The sharpest decline in TCE was first observed after 1 month of system operation (March 2007). Monitoring well 73-MW49DW reduced from 1,100 µg/L to 490 µg/L. After 1 year of operation (March 2008), 73-MW49DW TCE concentration was further reduced to 30 µg/L.
- Sparge flow rates were limited by the shallow depth to water. The target sparge flow rate of 200 cfm could not be achieved without causing artesian conditions in several monitoring wells.
- Ozone generator operation was erratic because of power interruptions at the Base and associated PLC failures. Required manual re-start of the generator also increased down-time. The generator operated for a total of 61 days, and delivered a total of 4,640 pounds of ozone to the aquifer.
- Assessment of ozone sparging proved inconclusive due to limited period of continuous ozone generation.

- Based on evaluation of the data, a combined effect of air stripping and some level of ERD appears to be occurring.

Anomalous results associated with sparging a thick (approximately 80 ft) impacted saturated zone, consisting of heterogeneous partially cemented layers interbedded with silty sand, was not entirely unexpected. Lateral air diversion beneath cemented sand zones was evidenced by bubbling/DO increases in monitoring wells installed as far as 300 ft from the sparge well. It is inferred that lateral air diversion resulted in some stagnant/"dead" zones in shallow portions of the aquifer, where biological reduction of the target compounds seemed to be occurring.

4.2 Lessons Learned

- **Horizontal Air Sparge Well Effectiveness**

  Results of the Site 73 pilot study clearly indicated that a directionally drilled sparge well is effective for distributing gas phase reagents, as evidenced by the rapid reduction in contaminant concentrations and widespread distribution of dissolved oxygen.

- **Mechanical Issues Associated with Ozone Generator Equipment**

  The number of mechanical issues associated with supporting equipment for the ozone generator, especially the PLC, was unexpected. The Ozonia generator itself was relatively trouble free, and the CFV series of generators has been used by CH2M HILL for water purification systems and proven to be similarly reliable. Problems associated with the supporting equipment were also linked to the consistent power fluctuations/ outages that seemed to occur weekly. Nonetheless, the system as a whole operates within a fairly narrow window of operating conditions, which must be maintained at all times (e.g. -120 °F dew point, cool, filtered air). The generator also requires a manual re-start in the event of a power failure. Unfortunately, the generator was not operated long enough to determine if NCGWQS could be achieved by ozone sparging.

4.3 Costs

This pilot study was completed for a total of $274,266. A breakdown of the costs incurred during implementation of the pilot study is provided in Table 4-1.

TABLE 4-1
Pilot Study Cost Breakdown

Pilot Study Activity	Cost	Percentage of Total Cost
System Installation	$5,005	2
Groundwater and Soil Vapor Monitoring	$57,046	21
System Operation and Maintenance	$111,288	41
Ozone System Equipment	$36,502	13
Management, Work Plan, Reporting	$64,435	23

SECTION 5

References

CH2M HILL. 2008. *Draft Supplemental Remedial Investigation of Operable Unit 21 (Site 73).* May.

CH2M HILL. 2006. *Pilot Study Work Plan for Site 73*. November.

CH2M HILL. 2004. Draft Master Project Plans, MCB Camp Lejeune. June.

MicroPact Engineering, Inc. and Baker Environmental, Inc. May 2006. *Pilot Study Report* for Site 73 (Operable Unit 21).

United States Environmental Protection Agency (USEPA). 2002.*OSWER Draft Guidance for Evaluating the Vapor Intrusion to Indoor Air Pathway from Groundwater and Soils.* November. EPA 530-D-02-004.

Appendix A
Soil Vapor Well Completion Diagrams

CH2MHILL

PROJECT NUMBER	WELL NUMBER	
T071	73-SG-1	SHEET 1 OF 1

WELL COMPLETION DIAGRAM

PROJECT: T071 LOCATION: site 73
DRILLING CONTRACTOR: Probe Tech Inc.
DRILLING METHOD AND EQUIPMENT USED: Geoprobe 4" dia Auger
WATER LEVELS: START: 11/17/04 1000 END: 11/17/04 LOGGER: K Riggs

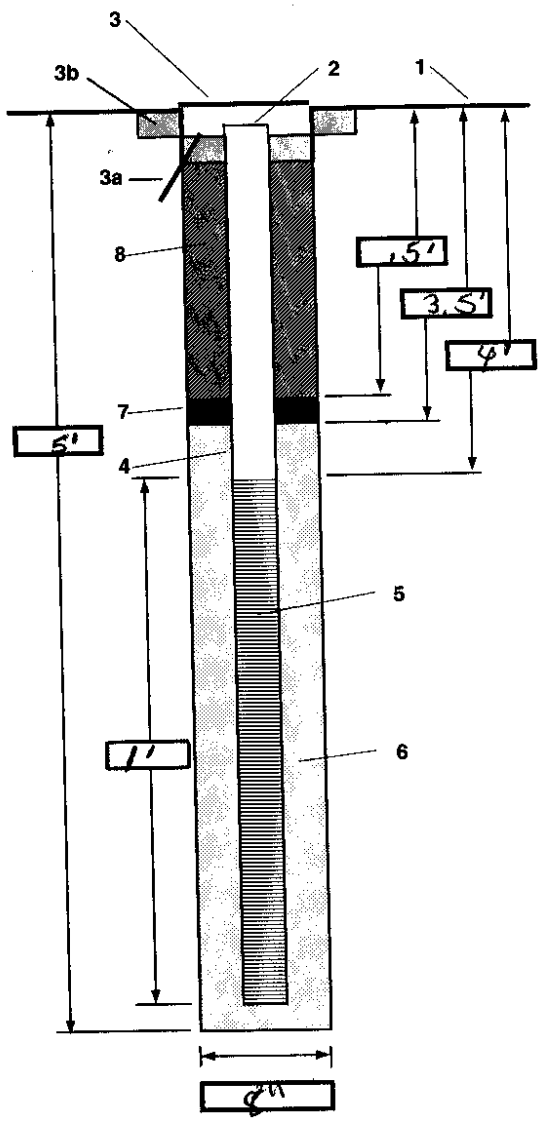

1- Ground elevation at well _____

2- Top of casing elevation _____

3- Wellhead protection cover type: Flushmount
a) drain tube? No
b) concrete pad dimensions: 2' X 2'

4- Dia./type of well casing: 1" schedule PVC

5- Type/slot size of screen: 0.01" machine slotted PVC

6- Type screen filter: #2 filter sand
a) Quantity used: 1.5 bags

7- Type of seal: Bentonite Seal
a) Quantity used: 1.5 bags

8- Grout
a) Grout mix used: 95% Type Portland 5% bentonite
b) Method of placement: Pour
c) Vol. of well casing grout _____

Development method: NA

Development time: NA

Estimated purge volume: NA

Comments:

Soil vapor well

CH2MHILL

PROJECT NUMBER	WELL NUMBER	
TO 71	73-SG-2	SHEET 1 OF 1

WELL COMPLETION DIAGRAM

PROJECT: TO 71 LOCATION: site 73 Camp Lejeune MCB

DRILLING CONTRACTOR: Geoprobe

DRILLING METHOD AND EQUIPMENT USED: Geoprobe; 4" dia dr. 11.

WATER LEVELS: START: 11/17/04 0920 END: 11/17/04 LOGGER: K. Riggs

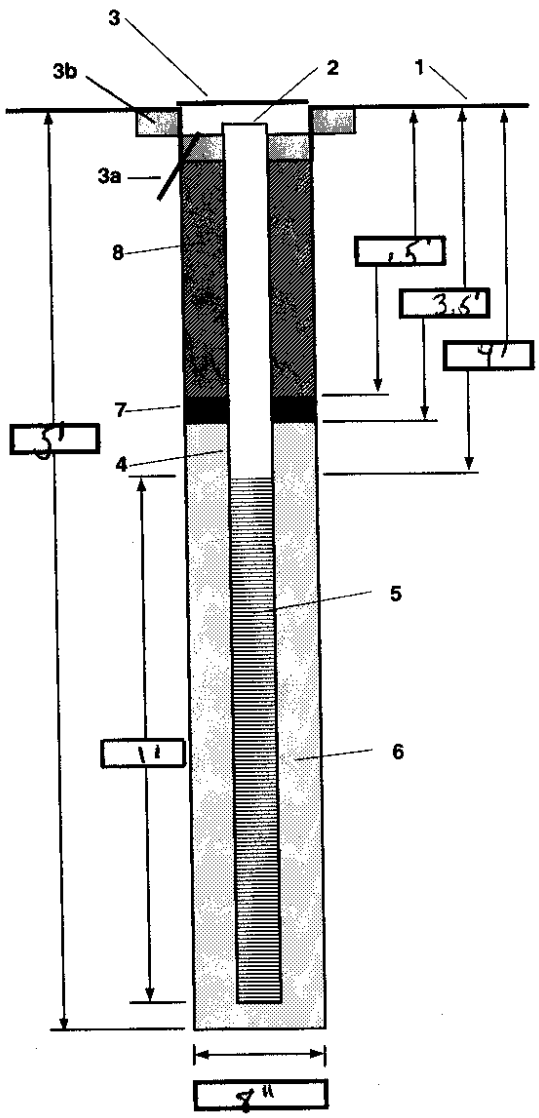

1- Ground elevation at well _____

2- Top of casing elevation _____

3- Wellhead protection cover type: Flush mount
a) drain tube? no
b) concrete pad dimensions: 2' x 2'

4- Dia./type of well casing: 8" flushmount; 1" PVC Schedule 40

5- Type/slot size of screen: 1' of 0.01" machine slotted PVC

6- Type screen filter: #2 filter sand
a) Quantity used: 1.5 bags

7- Type of seal: Bentonite seal
a) Quantity used: 1.5 bags

8- Grout
a) Grout mix used: 95% Portland type
b) Method of placement: 5% Bentonite - Pour
c) Vol. of well casing grout _____

Development method: NA

Development time: NA

Estimated purge volume: NA

Comments:

soil vapor well

PROJECT NUMBER	WELL NUMBER	
TO 71	SG-3	SHEET 1 OF 1

CH2MHILL

WELL COMPLETION DIAGRAM

PROJECT: Site 73 LOCATION: Site 73 Camp Lejeune MCB
DRILLING CONTRACTOR: Probe Technologies INC.
DRILLING METHOD AND EQUIPMENT USED: Geoprobe
WATER LEVELS: START: 11/17/06 0750 END: 11/17/06 LOGGER: K. Riggs

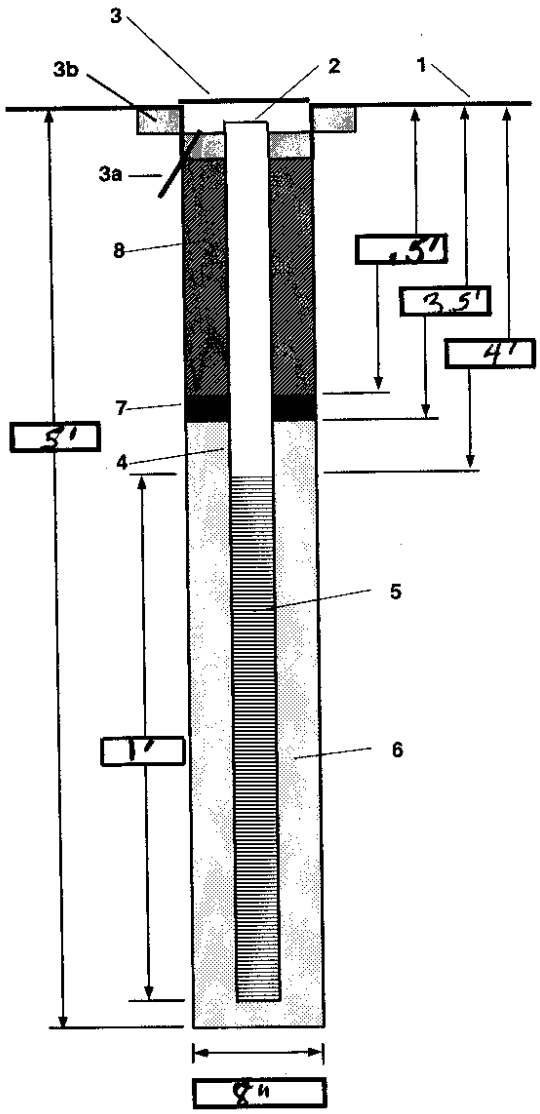

1- Ground elevation at well _____

2- Top of casing elevation _____

3- Wellhead protection cover type: Flushmount
a) drain tube? N/A
b) concrete pad dimensions: 2' x 2'

4- Dia./type of well casing: 1" PVC 8" flushmount

5- Type/slot size of screen: 0.01" machine slotted schedule 40 PVC

6- Type screen filter: #2 filter sand
a) Quantity used: 1.5 bags

7- Type of seal: Bentonite seal
a) Quantity used: 1.5 bags

8- Grout
a) Grout mix used: 95% Grout Portland 5% bentonite
b) Method of placement: Pour
c) Vol. of well casing grout _____

Development method: NA

Development time: NA

Estimated purge volume: NA

Comments:

CH2MHILL

PROJECT NUMBER	WELL NUMBER	
TO 071	73-SG-4	SHEET 1 OF 1

WELL COMPLETION DIAGRAM

PROJECT: TO 071 LOCATION: Site 73 Camp Lejeune MCB
DRILLING CONTRACTOR: Probe Technologies Inc.
DRILLING METHOD AND EQUIPMENT USED: Geoprobe
WATER LEVELS: START: 11/16/06 END: 11/17/06 LOGGER: K. Riggs

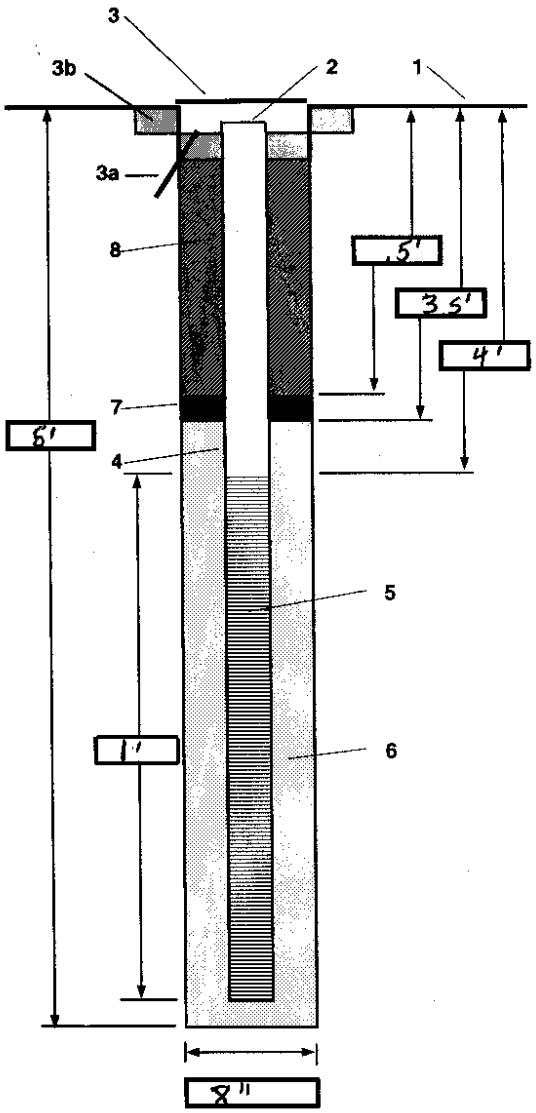

1- Ground elevation at well _____

2- Top of casing elevation _____

3- Wellhead protection cover type flush mount
a) drain tube? no
b) concrete pad dimensions 2' x 2'

4- Dia./type of well casing ~~8" metal casing~~ 1" PVC Schedule 40

5- Type/slot size of screen 0.01" machine slotted schedule 40 PVC

6- Type screen filter ~~1' of machine slotted PVC~~
a) Quantity used #2 filter sand 1.5 bags

7- Type of seal Bentonite seal
a) Quantity used 1 bag

8- Grout
a) Grout mix used Grout 95% type Portland 5% bentonite
b) Method of placement Pour
c) Vol. of well casing grout _____

Development method NA

Development time NA

Estimated purge volume NA

Comments:

Soil vapor well

Appendix B
Air/Ozone System Photos

Air Sparge/Ozone System

Pipe Addition

Booster Pumps

Air Sparge Influence on Monitoring Wells

Sub-slab Probe

Magnahelic Gauge

Appendix C
Groundwater Analytical Data Summary Table

Appendix C
Camp Lejune - Site 73
Groundwater Exceedance Results
December 2007 - May 2008

Station ID	NC2LGW (December2005)	IR73-MW13						IR73-MW13DW						IR73-MW14		IR73-MW27	
Sample ID		IR73-GW13-06D	IR73-GW13-07A	IR73-GW13-07C	IR73-GW13-07C2	IR73-GW13-07D	IR73-GW13-08A	IR73-GW13DW-06D	IR73-GW13DW-07A	IR73-GW13DW-07C	IR73-GW13DW-07C2	IR73-GW13DW-07D	IR73-GW13DW-08A	IR73-GW14-06D	IR73-GW14-07A	IR73-GW27-06D	IR73-GW27-07A
Sample Date		12/21/06	03/21/07	07/06/07	09/25/07	12/18/07	03/18/08	12/21/06	03/21/07	07/06/07	09/25/07	12/18/07	03/18/08	12/14/06	03/21/07	12/14/06	03/21/07
Chemical Name																	
Volatile Organic Compounds (UG/L)																	
1,1-Dichloroethene	7	1 U	1 U	1 U	1 U	1 U	1 U	4.2	8.2	3.6	1.3	1.1	1 U	1 U	1 U	1 U	1 U
1,2-Dichloroethane	0.38	1 U	1 U	1 U	1 U	1 U	1 U	0.58 J	0.92 J	0.49 J	0.39 J	0.33 J	1 U	1 U	1 U	1 U	1 U
1,2-Dichloropropane	0.51	1 U	1 U	1 U	1 U	1 U	1 U	1 U	1 U	1 U	1 U	1 U	1 U	1 U	1 U	1 U	1 U
1,4-Dichlorobenzene	1.4	1 U	1 U	1 U	1 U	1 U	1 U	1 U	1 U	1 U	1 U	1 U	1 U	1 U	1 U	1 U	1 U
2-Butanone	4,200	10 U	10 U	10 U	10 U	10 U	10 U	10 U	10 U	10 U	10 U	10 U	10 U	10 U	10 U	10 U	10 U
Acetone	700	10 U	10 U	10 U	3.2 J	10 U	4.7 J	10 U	10 U	10 U	2.8 J	10 U	10 U	10 U	10 U	10 U	10 U
Benzene	1	3.1	3.2	2.8	3.2	3	2.8	3.2	4.7	2.4	1.5	1.2	0.41 J	1 U	1.5	0.48 J	1 U
Bromodichloromethane	0.56	1 U	1 U	1 U	1 U	1 U	1 U	1 U	1 U	1 U	1 U	1 U	1 U	1 U	1 U	1 U	1 U
Carbon disulfide	700	1 U	1 U	1 U	1 U	1 U	1 U	1 U	1 U	1 U	1 U	1 U	1 U	1 U	1 U	1 U	1 U
Chloroform	70	1 U	1 U	1 U	1 U	1 U	1 U	1 U	1 U	1 U	1 U	1 U	1 U	1 U	1 U	1 U	1 U
Chloromethane	2.6	2 U	2 U	2 U	2 U	2 U	2 U	2 U	2 U	2 U	2 U	2 U	2 U	2 U	2 U	2 U	2 U
Cyclohexane	--	0.43 J	0.52 J	0.36 J	0.46 J	0.66 J	0.76 J	2 U	2 U	2 U	2 U	2 U	2 U	2 U	2 U	0.22 J	2 U
Ethylbenzene	550	1 U	1 U	1 U	1 U	1 U	1 U	1 U	1 U	1 U	1 U	1 U	1 U	1 U	1 U	1 U	1 U
Isopropylbenzene	70	1 U	0.28 J	0.23 J	0.2 J	0.26 J	0.26 J	1 U	1 U	1 U	1 U	1 U	1 U	0.33 J	0.54 J	1 U	1 U
Methylcyclohexane	--	1 U	1 U	1 U	1 U	0.16 J	1 U	1 U	1 U	1 U	1 U	1 U	1 U	1 U	1 U	1 U	1 U
Methylene chloride	4.6	2 U	2 U	2 U	2 U	2 U	2 U	2 U	2 U	2 U	2 U	2 U	2 U	2 U	2 U	2 U	2 U
Toluene	1,000	0.21 J	0.19 J	1 U	0.18 J	0.18 J	1 U	0.2 J	0.34 J	1 U	1 U	1 U	1 U	1 U	1 U	1 U	1 U
Trichloroethene	2.8	0.62 J	2.5 U	0.87 J	1	1.7	2	190	180	49	14	3.3	1 U	1 U	8.1	1 U	2.5 U
Vinyl chloride	0.015	16	19	14	13	16	15	57	36	45	49	45	26	1 U	2.6	0.64 J	0.78 J
Xylene, total	530	0.34 J	0.68 J	1 U	1 U	1 U	0.27 J	1 U	1 U	1 U	1 U	1 U	1 U	1 U	1 U	1 U	1 U
cis-1,2-Dichloroethene	70	9.1	8.5	12	14	24	31	130	190	130	82	49	4.2	1 U	5.4	1.1	1
trans-1,2-Dichloroethene	100	2.5	2.1	2.2	2.2	2.5	2.2	2.2	4.3	1.7	0.81 J	0.63 J	1 U	1 U	0.76 J	1 U	1 U

Notes:

Exceeds NC2LGW criteria

J - Analyte present, value may or may not be accurate or precise

NA - Not analyzed

U - The material was analyed for, but not detected

UG/L - Micrograms per liter

Monitoring wells IR73-MW38DW and IR73-MW39DW were switched during the March 2008 sampling event. These wells are labeled with "X" and were resampled in May 2007.

Appendix C
Camp Lejune - Site 73
Groundwater Exceedance Results
December 2007 - May 2008

Station ID	NC2LGW (December2005)	IR73-MW27DW										IR73-MW38DW				
Sample ID		IR73-GW27-07C	IR73-GW27-07C2	IR73-GW27-07D	IR73-GW27-08A	IR73-GW27DW-06D	IR73-GW27DW-07A	IR73-GW27DW-07C	IR73-GW27DW-07C2	IR73-GW27DW-07D	IR73-GW27DW-08A	IR73-GW38DW-06D	IR73-GW38DW-07A	IR73-GW38DW-07C	IR73-GW38DW-07C2	IR73-GW38DW-07D
Sample Date		07/05/07	09/25/07	12/18/07	03/18/08	12/14/06	03/21/07	07/05/07	09/25/07	12/18/07	03/18/08	12/15/06	03/20/07	07/03/07	09/24/07	12/18/07
Chemical Name																
Volatile Organic Compounds (UG/L)																
1,1-Dichloroethene	7	0.54 J	0.81 J	0.85 J	2 U	0.48 J	3.8	2	1.3 J	1.1	2.9	1 U	1 U	1 U	1 U	1 U
1,2-Dichloroethane	0.38	1 U	1 U	1 U	2 U	1 U	0.66 J	0.32 J	5 U	0.22 J	0.34 J	1 U	1 U	1 U	1 U	1 U
1,2-Dichloropropane	0.51	1 U	0.6 J	1 U	2 U	1 U	1 U	2 U	5 U	1 U	1 U	1 U	1 U	1 U	1 U	1 U
1,4-Dichlorobenzene	1.4	1 U	1 U	1 U	2 U	1 U	1 U	2 U	0.76 J	1 U	1 U	1 U	1 U	1 U	1 U	1 U
2-Butanone	4,200	10 U	10 U	10 U	20 U	10 U	82	20 U	50 U	10 U	10 U	10 U	10 U	10 U	10 U	10 U
Acetone	700	14 U	2.3 J	10 U	20 U	10 U	10 U	20 U	50 U	10 U	10 U	10 U	10 U	10 U	10 U	10 U
Benzene	1	0.13 J	1 U	1 U	2 U	0.3 J	2.7	2.5	1.3 J	1.6	2.6	1 U	1 U	1 U	1 U	1 U
Bromodichloromethane	0.56	1 U	1 U	1 U	2 U	1 U	1 U	2 U	1.2 J	1 U	1 U	1 U	1 U	1 U	1 U	1 U
Carbon disulfide	700	1 U	1 U	1.4	2 U	1 U	1 U	2 U	5 U	1 U	1 U	1 U	1 U	1 U	1 U	1 U
Chloroform	70	1 U	1 U	1 U	2 U	1 U	1 U	2 U	7.6	1 U	1 U	1 U	1 U	1 U	1 U	1 U
Chloromethane	2.6	0.82 J	2 U	2 U	4 U	2 U	2 U	4 U	10 U	2 U	2 U	2 U	2 U	2 U	2 U	2 U
Cyclohexane	--	0.14 J	2 U	2 U	4 U	2 U	2 U	4 U	10 U	2 U	2 U	2 U	2 U	2 U	2 U	2 U
Ethylbenzene	550	1 U	1 U	1 U	2 U	1 U	1 U	2 U	5 U	1 U	1 U	1 U	1 U	1 U	1 U	1 U
Isopropylbenzene	70	1 U	1 U	1 U	2 U	1 U	1 U	2 U	5 U	1 U	1 U	1 U	1 U	1 U	1 U	1 U
Methylcyclohexane	--	0.16 J	0.13 J	1 U	2 U	1 U	1 U	2 U	5 U	1 U	1 U	1 U	1 U	1 U	1 U	1 U
Methylene chloride	4.6	2 U	2 U	2 U	4 U	2 U	2 U	5.4	22	2 U	2 U	2 U	2 U	2 U	2 U	2 U
Toluene	1,000	1 U	1 U	1 U	2 U	1 U	1 U	2 U	5 U	1 U	1 U	1 U	1 U	1 U	1 U	1 U
Trichloroethene	2.8	120	130	190	97	2.9	160	51	44	34	72	1 U	1 U	1 U	1 U	1 U
Vinyl chloride	0.015	1.3	4.1	2.1	1.6 J	47	32	91	15	12	36	1 U	1 U	1 U	1 U	1 U
Xylene, total	530	1 U	1 U	1 U	2 U	1 U	1 U	2 U	5 U	1 U	1 U	1 U	1 U	1 U	1 U	1 U
cis-1,2-Dichloroethene	70	11	54	110	200	17	300	290	270	200	300	1 U	1 U	1 U	1 U	1 U
trans-1,2-Dichloroethene	100	0.77 J	1.3	2.2	3.2	0.45 J	6.6	4.2	3.6 J	3.1	6	1 U	1 U	1 U	1 U	1 U

Notes:

Exceeds NC2LGW criteria

J - Analyte present, value may or may not be accurate or precise

NA - Not analyzed

U - The material was analyed for, but not detected

UG/L - Micrograms per liter

Monitoring wells IR73-MW38DW and IR73-MW39DW were switched during the March 2008 sampling event. These wells are labeled with "X" and were resampled in May 2007.

Appendix C
Camp Lejune - Site 73
Groundwater Exceedance Results
December 2007 - May 2008

Station ID	NC2LGW (December2005)	IR73-MW38DW		IR73-MW39DW							IR73-MW44DW					
Sample ID		IR73-GW38DW-08A-X	IR73-GW38DW-08B	IR73-GW39DW-06D	IR73-GW39DW-07A	IR73-GW39DW-07C	IR73-GW39DW-07C2	IR73-GW39DW-07D	IR73-GW39DW-08A-X	IR73-GW39DW-08B	IR73-GW44DW-06D	IR73-GW44DW-07A	IR73-GW44DW-07C	IR73-GW44DW-07C2	IR73-GW44DW-07D	IR73-GW44DW-08A
Sample Date		03/17/08	05/21/08	12/18/06	03/20/07	07/03/07	09/24/07	12/18/07	03/17/08	05/21/08	12/18/06	03/20/07	07/05/07	09/26/07	12/19/07	03/18/08
Chemical Name																
Volatile Organic Compounds (UG/L)																
1,1-Dichloroethene	7	2.9	1 U	2.7	1.4	2.1	1.4	1.9	1 U	0.98 J	23	40	15	11	17	10
1,2-Dichloroethane	0.38	0.24 J	1 U	1 U	1 U	0.22 J	1 U	0.26 J	1 U	0.18 J	2 J	2.6	1.4 J	5 U	1.6	1.2 J
1,2-Dichloropropane	0.51	1 U	1 U	1 U	1 U	1 U	1 U	1 U	1 U	1 U	2.5 U	1 U	5 U	5 U	1 U	2 U
1,4-Dichlorobenzene	1.4	1 U	1 U	1 U	1 U	1 U	1 U	1 U	1 U	1 U	2.5 U	1 U	5 U	0.66 J	1 U	2 U
2-Butanone	4,200	10 U	10 U	10 U	10 U	10 U	10 U	10 U	10 U	1 U	25 U	10 U	50 U	50 U	10 U	20 U
Acetone	700	4.7 J	10 U	10 U	12	10 U	10 U	10 U	10 U	10 U	25 U	10 U	50 U	9.9 J	10 U	20 U
Benzene	1	11	1 U	5.3	2.7	9.7	9.1	8.3	1 U	10	8.4	8.6	5.6	5 J	7.1	6.1
Bromodichloromethane	0.56	1 U	1 U	1 U	1 U	1 U	1 U	1 U	1 U	1 U	2.5 U	1 U	5 U	5 U	1 U	2 U
Carbon disulfide	700	1 U	1 U	1 U	1 U	1 U	1 U	1 U	1 U	1 U	2.5 U	1 U	5 U	5 U	1 U	2 U
Chloroform	70	1 U	1 U	1 U	1 U	1 U	1 U	1 U	1 U	1 U	2.5 U	1 U	5 U	7.6	1 U	2 U
Chloromethane	2.6	2 U	2 U	2 U	2 U	0.4 J	2 U	2 U	2 U	2 U	5 U	2 U	10 U	10 U	2 U	4 U
Cyclohexane	--	0.3 J	2 U	2 U	2 U	0.23 J	0.23 J	0.25 J	2 U	0.27 J	0.78 J	1.1 J	10 U	10 U	0.44 J	4 U
Ethylbenzene	550	1 U	1 U	1 U	0.23 J	1 U	1 U	1 U	1 U	1 U	0.4 J	0.27 J	5 U	5 U	1 U	0.3 J
Isopropylbenzene	70	1 U	1 U	1 U	1 U	1 U	1 U	1 U	1 U	1 U	2.5 U	1 U	5 U	5 U	1 U	0.18 J
Methylcyclohexane	--	1 U	1 U	1 U	1 U	1 U	1 U	1 U	1 U	1 U	2.5 U	1 U	5 U	5 U	1 U	2 U
Methylene chloride	4.6	2 U	2 U	2 U	2 U	2 U	2 U	2 U	2 U	2 U	5 U	2 U	11	9.6 J	2 U	4 U
Toluene	1,000	0.83 J	1 U	1 U	1.3	1 U	0.79 J	0.69 J	1 U	0.55 J	0.84 J	0.76 J	5 U	5 U	0.63 J	0.38 J
Trichloroethene	2.8	2.1	1 U	19	3.3	2.8	0.98 J	1.4	1 U	0.74 J	200	100	33	67	33	33
Vinyl chloride	0.015	73	1 U	48	24	98	71	66	1 U	54	180	170	240	150	150	150
Xylene, total	530	1 U	1 U	1 U	0.28 J	1 U	1 U	1 U	1 U	1 U	0.77 J	1.4	5 U	5 U	1 U	0.53 J
cis-1,2-Dichloroethene	70	14	1 U	35	9.4	10	7.2	11	1 U	4.9	540	450	460	550	470	360
trans-1,2-Dichloroethene	100	0.41 J	1 U	1 U	1 U	0.31 J	1 U	0.2 J	1 U	0.19 J	24	31	18	13	20	14

Notes:

Exceeds NC2LGW criteria

J - Analyte present, value may or may not be accurate or precise

NA - Not analyzed

U - The material was analyed for, but not detected

UG/L - Micrograms per liter

Monitoring wells IR73-MW38DW and IR73-MW39DW were switched during the March 2008 sampling event. These wells are labeled with "X" and were resampled in May 2007.

Appendix C
Camp Lejune - Site 73
Groundwater Exceedance Results
December 2007 - May 2008

Station ID	NC2LGW (December2005)	IR73-MW46DW			IR73-MW46DW			IR73-MW48DW						IR73-MW49DW	
Sample ID		IR73-GW46DW-06D	IR73-GW46DW-07A	IR73-GW46DW-07C	IR73-GW46DW-07C2	IR73-GW46DW-07D	IR73-GW46DW-08A	IR73-GW48DW-06D	IR73-GW48DW-07A	IR73-GW48DW-07C	IR73-GW48DW-07C2	IR73-GW48DW-07D	IR73-GW48DW-08A	IR73-GW49DW-06D	IR73-GW49DW-07A
Sample Date		12/21/06	03/22/07	07/06/07	09/26/07	12/19/07	03/18/08	12/14/06	03/20/07	07/05/07	09/25/07	12/19/07	03/19/08	12/20/06	03/19/07
Chemical Name															
Volatile Organic Compounds (UG/L)															
1,1-Dichloroethene	7	1 U	1 U	0.26 J	0.28 J	1 U	1 U	1 U	4.5	3.5	1.9	1	1	12	15
1,2-Dichloroethane	0.38	1 U	1 U	1 U	1 U	1 U	1 U	1 U	1 U	0.21 J	0.24 J	0.18 J	1 U	2.2 J	2.5
1,2-Dichloropropane	0.51	1 U	1 U	1 U	1 U	1 U	1 U	1 U	1 U	1 U	1 U	1 U	1 U	5 U	1 U
1,4-Dichlorobenzene	1.4	1 U	1 U	1 U	1 U	1 U	1 U	1 U	1 U	1 U	1 U	1 U	1 U	5 U	1 U
2-Butanone	4,200	10 U	10 U	10 U	10 U	10 U	10 U	10 U	10 U	2.2 J	10 U	10 U	10 U	50 U	10 U
Acetone	700	10 U	10 U	10 U	2 J	10 U	10 U	10 U	10 U	10 U	10 U	10 U	10 U	50 U	10 U
Benzene	1	1 U	1 U	0.18 J	0.24 J	0.21 J	0.25 J	0.17 J	1.8	2	1.9	1.5	1.6	6.7	7.2
Bromodichloromethane	0.56	1 U	1 U	1 U	1 U	1 U	1 U	1 U	1 U	1 U	1 U	1 U	1 U	5 U	1 U
Carbon disulfide	700	1 U	1 U	1 U	1 U	1 U	1 U	1 U	1 U	1 U	1 U	1 U	1 U	5 U	1 U
Chloroform	70	1 U	1 U	1 U	1 U	1 U	1 U	1 U	1 U	1 U	1 U	1 U	1 U	5 U	1 U
Chloromethane	2.6	2 U	2 U	2 U	2 U	2 U	2 U	2 U	2 U	2 U	2 U	2 U	2 U	10 U	2 U
Cyclohexane	--	2 U	2 U	2 U	2 U	2 U	2 U	2 U	2 U	2 U	2 U	2 U	2 U	10 U	0.21 J
Ethylbenzene	550	1 U	1 U	1 U	1 U	1 U	1 U	1 U	1 U	1 U	1 U	1 U	1 U	5 U	0.21 J
Isopropylbenzene	70	1 U	1 U	1 U	1 U	1 U	1 U	1 U	1 U	1 U	1 U	1 U	1 U	5 U	1 U
Methylcyclohexane	--	1 U	1 U	1 U	1 U	1 U	1 U	1 U	1 U	1 U	1 U	1 U	1 U	5 U	1 U
Methylene chloride	4.6	2 U	2 U	2 U	2 U	2 U	2 U	2 U	2 U	2 U	2 U	2 U	2 U	10 U	2 U
Toluene	1,000	1 U	1 U	1 U	1 U	1 U	1 U	1 U	1 U	1 U	1 U	1 U	1 U	5 U	0.41 J
Trichloroethene	2.8	11	6.5	7.1	6	0.49 J	0.7 J	5.3	46	14	6.4	1.6	1.5	1,100	490
Vinyl chloride	0.015	4.7	21	52	65	46	35	12	26	78	77	62	66	97	130
Xylene, total	530	1 U	1 U	1 U	1 U	1 U	1 U	1 U	1 U	1 U	1 U	1 U	1 U	5 U	0.24 J
cis-1,2-Dichloroethene	70	18	4.8	7.4	9	5.1	24	5	130	150	160	60	85	680	370
trans-1,2-Dichloroethene	100	2.4	2.1	4.4	5	2.6	3.1	1 U	1.3	2	1.6	0.98 J	1.3	14	18

Notes:

Exceeds NC2LGW criteria

J - Analyte present, value may or may not be accurate or precise

NA - Not analyzed

U - The material was analyed for, but not detected

UG/L - Micrograms per liter

Monitoring wells IR73-MW38DW and IR73-MW39DW were switched during the March 2008 sampling event. These wells are labeled with "X" and were resampled in May 2007.

Appendix C
Camp Lejune - Site 73
Groundwater Exceedance Results
December 2007 - May 2008

Station ID	NC2LGW (December2005)	IR73-MW49DW				IR73-MW49DWA						IR73-MW49IW			
Sample ID		IR73-GW49DW-07C	IR73-GW49DW-07C2	IR73-GW49DW-07D	IR73-GW49DW-08A	IR73-GW49DWA-06D	IR73-GW49DWA-07A	IR73-GW49DWA-07C	IR73-GW49DWA-07C2	IR73-GW49DWA-07D	IR73-GW49DWA-08A	IR73-GW49IW-06D	IR73-GW49IW-07A	IR73-GW49IW-07C	IR73-GW49IW-07C2
Sample Date		07/02/07	09/24/07	12/17/07	03/17/08	12/20/06	03/19/07	07/02/07	09/24/07	12/17/07	03/17/08	12/20/06	03/19/07	07/02/07	09/24/07
Chemical Name															
Volatile Organic Compounds (UG/L)															
1,1-Dichloroethene	7	10	6.8	6.1	20 U	1 U	1 U	1 U	1 U	1 U	1 U	6.9	4.1	6.7 J	7 J
1,2-Dichloroethane	0.38	10 U	1.8 J	1.5 J	20 U	1 U	1 U	1 U	1 U	1 U	1 U	2.4 J	1.4	20 U	20 U
1,2-Dichloropropane	0.51	10 U	5 U	5 U	20 U	1 U	1 U	1 U	1 U	1 U	1 U	5 U	1 U	20 U	20 U
1,4-Dichlorobenzene	1.4	10 U	0.7 J	5 U	20 U	1 U	1 U	1 U	1 U	1 U	1 U	5 U	1 U	20 U	3 J
2-Butanone	4,200	100 U	50 U	50 U	200 U	10 U	10 U	2.1 J	10 U	10 U	10 U	50 U	140	200 U	200 U
Acetone	700	100 U	50 U	50 U	200 U	10 U	10 U	2.2 U	10 U	10 U	10 U	50 U	10 U	200 U	200
Benzene	1	5.4 J	4.5 J	4.4 J	5 J	1 U	1 U	1 U	1 U	1 U	1 U	5.9	3.6	4.8 J	5 J
Bromodichloromethane	0.56	10 U	5 U	5 U	20 U	1 U	1 U	1 U	1 U	1 U	1 U	5 U	1 U	20 U	20 U
Carbon disulfide	700	10 U	5 U	5 U	20 U	1 U	1 U	1 U	1 U	1 U	1 U	5 U	1 U	20 U	20 U
Chloroform	70	10 U	7.5	5 U	20 U	0.31 J	1 U	1 U	1 U	1 U	1 U	5 U	1 U	20 U	31
Chloromethane	2.6	20 U	10 U	10 U	40 U	0.52 J	2 U	0.45 J	2 U	2 U	2 U	10 U	2 U	40 U	40 U
Cyclohexane	--	20 U	10 U	10 U	40 U	2 U	2 U	2 U	2 U	2 U	2 U	10 U	2 U	40 U	40 U
Ethylbenzene	550	10 U	5 U	5 U	20 U	1 U	1 U	1 U	1 U	1 U	1 U	5 U	1 U	20 U	20 U
Isopropylbenzene	70	10 U	5 U	5 U	20 U	1 U	1 U	1 U	1 U	1 U	1 U	5 U	1 U	20 U	20 U
Methylcyclohexane	--	10 U	5 U	5 U	20 U	1 U	1 U	1 U	1 U	1 U	1 U	5 U	1 U	20 U	20 U
Methylene chloride	4.6	30	9.7 J	10 U	40 U	2 U	2 U	2 U	2 U	2 U	2 U	10 U	2 U	44	40 U
Toluene	1,000	10 U	5 U	5 U	20 U	1 U	1 U	0.52 U	1 U	1 U	1 U	5 U	1 U	20 U	20 U
Trichloroethene	2.8	250	490	420	30	1 U	2.5 U	1 U	1 U	1 U	1 U	990	170	230	450
Vinyl chloride	0.015	180	48	20	59	1 U	1 U	1 U	1 U	1 U	1 U	38	30	170	88
Xylene, total	530	10 U	5 U	5 U	20 U	1 U	1 U	1 U	1 U	1 U	1 U	5 U	1 U	20 U	20 U
cis-1,2-Dichloroethene	70	670	700	600	1,700	1 U	1 U	1 U	1 U	1 U	1 U	1,000	130	1,300	1,700
trans-1,2-Dichloroethene	100	11	8.4	7.5	42	1 U	1 U	1 U	1 U	1 U	1 U	33	27	33	31

Notes:

Exceeds NC2LGW criteria

J - Analyte present, value may or may not be accurate or precise

NA - Not analyzed

U - The material was analyed for, but not detected

UG/L - Micrograms per liter

Monitoring wells IR73-MW38DW and IR73-MW39DW were switched during the March 2008 sampling event. These wells are labeled with "X" and were resampled in May 2007.

Appendix C
Camp Lejune - Site 73
Groundwater Exceedance Results
December 2007 - May 2008

Station ID	**NC2LGW (December2005)**	IR73-MW49IW		IR73-MW63DW					
Sample ID		IR73-GW49IW-07D	IR73-GW49IW-08A	IR73-GW63DW-06D	IR73-GW63DW-07A	IR73-GW63DW-07C	IR73-GW63DW-07C2	IR73-GW63DW-07D	IR73-GW63DW-08A
Sample Date		12/17/07	03/17/08	12/18/06	03/20/07	07/05/07	09/25/07	12/19/07	03/19/08
Chemical Name									
Volatile Organic Compounds (UG/L)									
1,1-Dichloroethene	7	4.8 J	3.8 J	4.2	19	6.3	6.2	2	6.8
1,2-Dichloroethane	0.38	1.7 J	5 U	0.71 J	1.5	0.9 J	0.74 J	1 U	1 J
1,2-Dichloropropane	0.51	5 U	5 U	2 U	1 U	5 U	1 U	1 U	2 U
1,4-Dichlorobenzene	1.4	5 U	5 U	2 U	1 U	5 U	1 U	1 U	2 U
2-Butanone	4,200	50 U	50 U	20 U	10 U	50 U	10 U	10 U	20 U
Acetone	700	50 U	50 U	20 U	10 U	50 U	10 U	10 U	20 U
Benzene	1	4.3 J	3 J	2.9	6.1	4.6 J	3.3	0.84 J	4.8
Bromodichloromethane	0.56	5 U	5 U	2 U	1 U	5 U	1 U	1 U	2 U
Carbon disulfide	700	5 U	5 U	2 U	1 U	5 U	1 U	1 U	2 U
Chloroform	70	5 U	5 U	2 U	1 U	5 U	1 U	1 U	2 U
Chloromethane	2.6	10 U	10 U	4 U	2 U	10 U	2 U	2 U	4 U
Cyclohexane	--	10 U	10 U	4 U	2 U	10 U	2 U	2 U	4 U
Ethylbenzene	550	5 U	5 U	2 U	1 U	5 U	1 U	1 U	2 U
Isopropylbenzene	70	5 U	5 U	2 U	1 U	5 U	1 U	1 U	2 U
Methylcyclohexane	--	5 U	5 U	2 U	1 U	5 U	1 U	1 U	2 U
Methylene chloride	4.6	10 U	10 U	4 U	2 U	13	2 U	2 U	4 U
Toluene	1,000	5 U	5 U	2 U	0.29 J	5 U	1 U	1 U	2 U
Trichloroethene	2.8	300	76	410	470	380	180	26	340
Vinyl chloride	0.015	29	43	12	32	40	32	15	20
Xylene, total	530	5 U	5 U	2 U	1 U	5 U	1 U	1 U	2 U
cis-1,2-Dichloroethene	70	1,300	560	140	180	190	190	20	250
trans-1,2-Dichloroethene	100	27	7.8	3.3	6.2	4.8 J	3.4	0.67 J	5.7

Notes:

Exceeds NC2LGW criteria

J - Analyte present, value may or may not be accurate or precise

NA - Not analyzed

U - The material was analyed for, but not detected

UG/L - Micrograms per liter

Monitoring wells IR73-MW38DW and IR73-MW39DW were switched during the March 2008 sampling event. These wells are labeled with "X" and were resampled in May 2007.

Appendix D
Soil Vapor Analytical Data Summary Table

Appendix D
Camp Lejeune - Site 73
Soil Vapor Exceedance Results
December 2006 - March 2008

Station ID	Generic Screening Levels[1] (PPBV)	IR73-SV01						IR73-SV02					
Sample ID		IR73-SV01-120606	IR73-SV01-07A	IR73-SV01-07C	IR73-SV01-07C2	IR73-SV01-07D	IR73-SV01-08A	IR73-SV02-120606	IR73-SV02-07A	IR73-SV02-07C	IR73-SV02-07C2	IR73-SV02-07D	IR73-SV02-08A
Sample Date		12/06/06	03/22/07	07/03/07	09/26/07	12/17/07	03/19/08	12/06/06	03/22/07	07/03/07	09/26/07	12/17/07	03/19/08
Chemical Name													
Volatile Organic Compounds (UG/M3)													
1,1,2-Trichloroethane	2.8	0.65	2.78 U	10.7 U	2.08 U	2 U	3.6 U	2.01 U	2.16 U	2.1 U	2.04 U	1.89 U	1.85 U
1,1-Dichloroethene	---	1.97 U	2.78 U	22.5	2.08 U	2 U	3.6 U	2.01 U	2.16 U	2.1 U	2.04 U	1.89 U	1.85 U
1,2,4-Trimethylbenzene	12	31.4	2.78 U	181	31.8	8.79	7.41	3.56	1.1 J	0.672 J	6.12	0.9 J	1.85 U
1,2-Dichlorobenzene	---	1.97 U	2.78 U	10.7 U	2.08 U	2 U	3.6 U	2.01 U	2.16 U	2.1 U	0.959 J	1.89 U	1.85 U
1,3,5-Trimethylbenzene	12	31.3	2.78 U	12.6	4.1	1.41 J	3.6 U	2.01 U	2.16 U	0.252 J	1.71 J	1.89 U	1.85 U
1,3-Dichlorobenzene	170	1.97 U	0.278 J	10.7 U	2.08 U	2 U	3.6 U	2.01 U	2.16 U	2.1 U	0.265 J	1.89 U	1.85 U
1,4-Dichlorobenzene	1,300	1.97 U	0.278 J	10.7 U	2.08 U	2 U	3.6 U	2.01 U	2.16 U	2.1 U	0.755 J	1.89 U	1.85 U
Benzene	9.8	1.97 U	0.862 J	10.7 U	2.08 U	2 U	1.13 J	2.39 U	2.16 U	2.1 U	2.04 U	1.89 U	1.85 U
Chloroform	2.2	2.86	2.78 U	10.7 U	2.08 U	2 U	3.6 U	0.342	2.16 U	2.1 U	2.04 U	1.89 U	1.85 U
Chloromethane	120	1.44	2.78 U	10.7 U	2.08 U	2 U	3.6 U	1.03	2.16 U	2.1 U	2.04 U	1.89 U	1.85 U
Dichlorodifluoromethane (Freon-12)	400	1.97 U	4.31	2.66 J	2.08 U	2 U	3.6 U	2.01 U	2.16 U	2.1 U	2.04 U	1.89 U	1.85 U
Ethylbenzene	51	3.74	2.78 U	97.7	7.51	2 U	3.6 U	2.47	0.907 J	2.1 U	4.79	1.89 U	1.85 U
Methylene chloride	150	1.97 U	2.78 U	10.7 U	2.08 U	1.11 J	3.6 U	4.84 U	2.16 U	2.1 U	2.04 U	1.89 U	1.85 U
Styrene	2,300	1.97 U	2.78 U	10.7 U	2.08 U	2 U	3.6 U	2.01 U	2.16 U	0.294 J	2.04 U	1.89 U	1.85 U
Toluene	1,100	4.83 U	2.78 U	12.5	2.85	2 U	3.6 U	6.91 U	2.16 U	2.37	14.1	1.89 U	1.85 U
Trichloroethene	0.41	2.74	2.78 U	208	31	12.7	2.82 J	2.01 U	2.16 U	2.1 U	2.04 U	1.89 U	1.85 U
Trichlorofluoromethane(Freon-11)	1,200	1.97 U	2.78 U	10.7 U	2.08 U	2 U	3.6 U	2.01 U	2.16 U	2.1 U	2.04 U	1.89 U	1.85 U
Vinyl chloride	11	1.97 U	2.78 U	109	2.08 U	2 U	3.6 U	0.261	2.16 U	2.12	1.04 J	1.89 U	1.85 U
cis-1,2-Dichloroethene	88	1.97 U	2.78 U	36.8	1.23 J	1.04 J	1.23 J	0.482	2.16 U	2.1 U	2.04 U	1.38 J	6.12
m- and p-Xylene	16,000	14.6	5.56 U	77.4	10.8	4 U	7.2 U	7.18	2.42 J	4.2 U	20.9	3.78 U	3.7 U
o-Xylene	16,000	17.7	2.78 U	79.2	10.5	3.94	2.23 J	2.69	0.886 J	5.29	22.1	1.89 U	1.4 J

Notes:

J - Analyte present, value may or may not be accurate or precise

NA - Not analyzed

U - The material was analyed for, but not detected

UG/M3 - Micrograms per cubic meter

Shading indicates exceedance of Generic Screening levels

Appendix D
Camp Lejeune - Site 73
Soil Vapor Exceedance Results
December 2006 - March 2008

Station ID	Generic Screening Levels[1] (PPBV)	IR73-SV03						IR73-SV04					
Sample ID		IR73-SV03-120606	IR73-SV03-07A	IR73-SV03-07C	IR73-SV03-07C2	IR73-SV03-07D	IR73-SV03-08A	IR73-SV04-120606	IR73-SV04-07A	IR73-SV04-07C	IR73-SV04-07C2	IR73-SV04-07D	IR73-SV04-08A
Sample Date		12/06/06	03/22/07	07/03/07	09/26/07	12/17/07	03/19/08	12/06/06	03/22/07	07/03/07	09/26/07	12/17/07	03/19/08
Chemical Name													
Volatile Organic Compounds (UG/M3)													
1,1,2-Trichloroethane	2.8	2.04 U	2.03 U	7.37 U	7.73 U	4.83 U	3.6 U	2.05 U	1.94 U	21.8 U	2.14 U	2.08 U	1.76 U
1,1-Dichloroethene	---	2.04 U	2.03 U	38	35.3	6.03 U	3.9	2.05 U	1.94 U	21.8 U	2.14 U	2.08 U	1.57 J
1,2,4-Trimethylbenzene	12	1.8	1.1 J	3.91 J	7.27 J	1.06 J	7.24	2.05 U	1.94 U	1.74 J	2.2	1.84 J	1.76 U
1,2-Dichlorobenzene	---	2.04 U	2.03 U	7.37 U	7.73 U	4.83 U	3.6 U	2.05 U	1.94 U	21.8 U	2.14 U	2.08 U	1.76 U
1,3,5-Trimethylbenzene	12	2.04 U	0.345 J	7.37 U	5.02 J	1.69 J	9.09	2.05 U	0.155 J	21.8 U	0.642 J	0.53 J	1.76 U
1,3-Dichlorobenzene	170	2.04 U	2.03 U	7.37 U	7.73 U	4.83 U	3.6 U	2.05 U	1.94 U	21.8 U	2.14 U	2.08 U	1.76 U
1,4-Dichlorobenzene	1,300	2.04 U	2.03 U	7.37 U	7.73 U	4.83 U	3.6 U	2.05 U	1.94 U	21.8 U	2.14 U	2.08 U	1.76 U
Benzene	9.8	2.04 U	2.03 U	160	58.1	2.09 J	4.1	2.05 U	1.94 U	17.9 J	2.14 U	1.61 J	1.74 J
Chloroform	2.2	0.673	2.03 U	7.37 U	7.73 U	4.83 U	3.6 U	1.64	1.94 U	21.8 U	2.14 U	2.08 U	1.76 U
Chloromethane	120	1.16	2.03 U	7.37 U	5.72 J	4.83 U	3.6 U	2.05 U	1.94 U	21.8 U	2.14 U	2.08 U	1.76 U
Dichlorodifluoromethane (Freon-12)	400	2.04 U	0.365 J	7.37 U	7.73 U	4.83 U	3.6 U	76.2	13.3	7.63 J	2.14 U	2.08 U	1.76 U
Ethylbenzene	51	2.65	0.954 J	49.5	7.73 U	4.83 U	3.44 J	2.05 U	0.427 J	21.8 U	2.08 J	1.65 J	1.59 J
Methylene chloride	150	2.04 U	2.03 U	7.37 U	7.73 U	4.83 U	1.33 J	3.12 U	1.94 U	21.8 U	2.14 U	2.08 U	1.08 J
Styrene	2,300	2.04 U	2.03 U	7.37 U	7.73 U	4.83 U	3.6 U	2.05 U	1.94 U	21.8 U	2.14 U	2.08 U	1.76 U
Toluene	1,100	2.04 U	1.06 J	7.59	11.2	4.83 U	1.08 J	2.05 U	0.873 J	9.37 J	2.14 U	12.1	0.56 J
Trichloroethene	0.41	2.04 U	2.03 U	7.37 U	3.87 J	4.83 U	1.16 J	1.44	1.94 U	21.8 U	1.78 J	2.08 U	0.51 J
Trichlorofluoromethane(Freon-11)	1,200	2.04 U	2.03 U	7.37 U	7.73 U	4.83 U	3.6 U	2.05 U	1.94 U	21.8 U	0.899 J	2.08 U	1.76 U
Vinyl chloride	11	0.428	2.03 U	439	358	78.3	166	2.05 U	1.94 U	16.6 J	2.14 U	2.08 U	63.1
cis-1,2-Dichloroethene	88	0.836	2.03 U	38.1	33.8	60.7	81.9	0.287	1.94 U	15.9 J	3	2.08 U	33.3
m- and p-Xylene	16,000	4.08 U	3.02 J	49.3	25.4	9.66 U	4.47 J	4.1 U	1.77 J	43.6 U	4.19 J	4.41 U	2 J
o-Xylene	16,000	2.04 U	1.02 J	46.5	9.74	4.83 U	2.22 J	2.05 U	0.64 J	4.36 J	1.33 J	2.08 U	1 J

Notes:

J - Analyte present, value may or may not be accurate or precise

NA - Not analyzed

U - The material was analyed for, but not detected

UG/M3 - Micrograms per cubic meter

Shading indicates exceedance of Generic Screening levels

Appendix E
Water Quality Parameter Data Tables

Appendix E
Water Quality Parameters
MCB Camp Lejeune, North Carolina

		Water Quality Parameters					
Well ID	**Date**	**Temperature (^oC)**	**Dissolved Oxygen (mg/L)**	**ORP (mV)**	**pH**	**Specific Conductivity (µS/cm)**	**Turbidity (NTU)**
73-MW13DW	12/21/2006	20.8	0.25	-115	6.96	982	18.1
	3/21/2007	20.59	0.30	-157	7.22	910	0
	7/6/2007	22.04	0.70	-118	6.67	813	155.0
	9/25/2007	23.42	2.19	-179	6.76	870	39.2
	12/18/2007	21.10	1.20	-102	6.99	766	180.0
	3/18/2008	20.58	1.00	-135	5.54	1390	98.1
73-MW13	12/21/2006	21.1	0.33	-148	5.86	440	78.3
	3/21/2007	20.34	0.96	-91	5.95	429	0
	7/6/2007	23.64	1.51	-56	5.98	990	39.4
	9/25/2007	27.70	1.39	-101	5.86	399	101.0
	12/18/2007	22.34	1.09	-153	5.73	292	383.1
	3/18/2008	19.20	0.22	-208	4.68	460	0.0
73-MW14	12/14/2006	19.90	0.76	-163	6.71	934	6.7
	3/21/2007	17.16	0.90	-114	6.86	1350	12.5
	7/6/2007	NS	NS	NS	NS	NS	NS
	9/25/2007	NS	NS	NS	NS	NS	NS
	12/18/2007	NS	NS	NS	NS	NS	NS
	3/18/2008	NS	NS	NS	NS	NS	NS
73-MW27	12/14/2006	21.9	1.30	-240	6.56	779	2.2
	3/21/2007	19.12	0.66	-154	6.86	672	6.1
	7/5/2007	24.87	1.24	-369	6.4	598	0
	9/25/2007	28.50	0.99	-288	6.72	535	4.1
	12/18/2007	23.15	2.75	-169	7.34	565	152
	3/18/2008	18.86	0.25	-223	5.15	848	120
73-MW27DW	12/14/2006	21.9	0.58	-210	8.93	722	7.8
	3/21/2007	21.45	0.76	-149	7.14	990	0
	7/5/2007	22.2	2.47	-180	7.3	2280	94.6
	9/25/2007	23.30	2.15	-152	7.19	1000	43.8
	12/18/2007	22.20	2.75	-203	7.5	571	170
	3/18/2008	20.38	0.52	-171	5.83	999	-66
73-MW38DW	12/15/2006	20.9	1.01	-133	7.5	332	7.0
	3/20/2007	20.83	0.74	-192	7.89	440	13.8
	7/3/2007	21.85	0.59	-163	7.3	394	6.4
	9/24/2007	23.69	2.31	-142	7.51	353	6.2
	12/18/2007	21.10	3.70	-187	7.61	322	16.3
	3/17/2008	19.96	0.34	-154	6.9	999	0.1
73-MW39DW	12/18/2006	21	0.24	-136	6.8	865	29.2
	3/20/2007	21.59	1.27	-137	6.89	844	24
	7/3/2007	22.55	2.94	-147	7.14	2180	58
	9/24/2007	23.1	0.91	-134	6.89	1000	61.7
	12/18/2007	20.76	2.56	-128	7.16	665	39.1
	3/17/2008	18.22	2.07	-66	6.62	265	-10

Appendix E
Water Quality Parameters
MCB Camp Lejeune, North Carolina

		Water Quality Parameters					
Well ID	Date	Temperature (^oC)	Dissolved Oxygen (mg/L)	ORP (mV)	pH	Specific Conductivity (µS/cm)	Turbidity (NTU)
73-MW44DW	12/18/2006	21.2	0.33	-120	6.5	1050	2.1
	3/20/2007	20.81	1.06	-155	6.88	1000	3.1
	7/5/2007	22.31	0.57	-139	6.57	930	48.7
	9/24/2007	22.90	2.15	-117	6.6	1480	2.3
	12/19/2007	21.50	1.96	-134	6.92	907	242
	3/18/2008	21.21	0.18	-106	5.25	970	772
73-MW46DW	12/21/2006	19.50	0.28	-55	7.3	502	20.2
	3/22/2007	19.84	0.52	-137	7.81	751	0.0
	7/6/2007	21.13	2.1	-129	7.2	413	84.8
	9/26/2007	21.50	3.71	-142	7.21	900	4.9
	12/19/2007	20.40	1.41	-173	7.56	364	118.0
	3/18/2008	21.01	0.19	-171	5.75	524	225.0
73-MW48DW	12/14/2006	20.7	1.41	-36	7.37	487	5
	3/20/2007	20.48	1.89	-177	7.71	515	28.6
	7/5/2007	21.68	0.92	-146	7.17	448	11.2
	9/25/2007	24.15	1.89	-131	7.42	425	3.4
	12/19/2007	20.9	1.28	-164	7.54	422	5.3
	3/19/2008	21.53	0.79	-175	5.97	747	0
73-MW49DWA	12/20/2006	19.2	0.25	-218	7.61	1080	25.5
	3/19/2007	20.35	1.02	-223	7.71	581	20.3
	7/2/2007	21.77	0.95	-238	7.9	1210	38.4
	9/24/2007	24.7	4.11	-224	7.66	1330	152
	12/17/2007	18.8	3.11	-233	7.71	874	13.4
	3/17/2008	21.18	0.83	-177	6.49	1190	10.5
73-MW49DW	12/20/2006	20.2	0.25	-121	6.76	940	13.1
	3/19/2007	20.36	1.21	-213	7.16	925	44.7
	7/2/2007	21.52	1.14	-141	6.7	791	14.8
	9/24/2007	23.41	3.01	-60	6.82	675	72.1
	12/17/2007	20.09	2.9	-24	6.82	722	200
	3/17/2008	20.23	0.22	-84	6.06	873	28.1
73-MW49IW	12/20/2006	20.5	0.26	-118	6.85	840	21.1
	3/19/2007	20.46	0.85	-198	7.25	798	14.6
	7/2/2007	21.66	1.19	-139	6.7	713	129
	9/24/2007	23.48	1.11	-88	6.9	572	39.1
	12/17/2007	19.94	3.39	-46	6.8	696	109
	3/17/2008	20.5	0.21	-47	6.16	940	163
73-MW63DW	12/18/2006	20.5	0.27	-131	7.01	678	8.3
	3/20/2007	20.79	0.96	-154	7.09	689	11.1
	7/5/2007	21.77	0.92	-138	6.91	600	203
	9/24/2007	22.6	1.71	-171	7.18	701	53.5
	12/17/2007	20.9	2.36	-223	7.78	483	301
	3/19/2008	20.81	0.81	-164	5.61	999	194