M67001.AR.006465
MCB CAMP LEJUENE
5090.3a

DRAFT WORK PLAN ADDENDUM STATEMENT OF WORK DESIGN BUILDING LCH-4015

MCB CAMP LEJEUNE NC

7/1/1997

J.A. JONES ENVIRONMENTAL SERVICES COMPANY

DRAFT WORK PLAN ADDENDUM
Delivery Order No. 037A
RAC Action for
Statement of Work Design
Building LCH-4015
Camp Lejeune, North Carolina

Prepared for

The Atlantic Division, Naval Facilities Engineering Command

July 1997

Prepared by

J.A. Jones Environmental Services Company
8936 Western Way, Suite 10
Jacksonville, Florida 32256
J.A. Jones No. 005.037

ACRONYM LIST

AST	aboveground storage tank
ASTM	American Society of Testing and Materials
DPI	differential pressure indicator
ft bls	feet below land surface
FOD	foreign object debris
HDPE	high density polyethylene
J.A. Jones	J.A. Jones Environmental Services Company
Law	Law Engineering and Environmental Services, Inc.
mg/kg	milligrams per kilogram
MTBE	methyl tert-butyl ether
NAVFAC	Navy Atlantic Division, Naval Facilities Engineering Command
NCAC	North Carolina Administrative Code
NCDEHNR	North Carolina Department of Environment, Health, and Natural Resources
NCDOT	North Carolina Department of Transportation
NFPA	National Fire Protection Association
OSHA	Occupational Safety and Health Administration
PAH	polynuclear aromatic hydrocarbons
PID	photoionization detector
PPE	Personal Protective Clothing and Equipment
PVC	polyvinyl chloride
ROICC	Resident Officer in Charge of Construction
SQA	Site Quality Administrator
SVE	soil vapor extraction
TPH	total petroleum hydrocarbons
USEPA	United States Environmental Protection Agency

TABLE OF CONTENTS

ACRONYM LIST i

TABLE OF CONTENTS ii

LIST OF TABLES iv

LIST OF FIGURES v

LIST OF APPENDICES vi

SECTION 1.0 INTRODUCTION **1-1**

1.1 SITE HISTORY AND PROJECT OBJECTIVES 1-2
1.2 SCOPE OF WORK 1-4
1.2.1 Mobilization/Setup of Construction Temporary Facilities And Site Controls 1-4
1.2.2 Soil Vapor Extraction Pilot Study 1-6
1.2.3 Biosparge Well Installation 1-7
1.2.4 Soil Vapor Extraction Well Installation 1-8
1.2.5 Trenching and Pipe Installation 1-8
1.2.6 Treatment System Installation 1-10
1.2.7 System Testing 1-10
1.2.8 Site Restoration 1-10
1.2.9 Demobilization 1-11
1.2.10 Operation And Maintenance 1-11
1.3 PROJECT SCHEDULE 1-11
1.4 TRAFFIC CONTROL PLAN 1-12

SECTION 2.0 SAMPLING AND ANALYSIS PLAN **2-1**

2.1 SOIL SITE REHABILITATION LEVELS 2-1
2.2 FILL MATERIAL COMPACTION TESTS 2-2
2.3 OPERATION AND MAINTENANCE SAMPLING 2-2
2.3.1 Sample Collection Locations 2-2
2.3.2 Sample Collection Schedule 2-2
2.3.3 Laboratory Analyses 2-3
2.4 BIOSPARGE WELL DEVELOPMENT AND MONITORING WELL PURGE WATER 2-3
2.5 SOIL VAPOR WATER AND AIR COMPRESSOR CONDENSATE 2-4

SECTION 3.0 WASTE STREAM MANAGEMENT PLAN **3-1**

TABLE OF CONTENTS (continued)

SECTION 4.0 ENVIRONMENTAL PROTECTION PLAN 4-1

SECTION 5.0 HEALTH AND SAFETY PLAN 5-1

SECTION 6.0 QUALITY CONTROL PLAN 6-1

6.1 SUBMITTAL REGISTER 6-1
6.2 TESTING AND ANALYSIS QUALITY CONTROL LOG 6-1
6.3 PROJECT ORGANIZATION 6-1

SECTION 7.0 TECHNICAL SPECIFICATIONS 7-1

7.1 TECHNICAL SPECIFICATION MODIFICATIONS 7-1
7.1.1 Soil Vapor Extraction Wells 7-1
7.1.2 Soil Vapor Extraction Materials 7-1
7.1.3 Submittal Register 7-1
7.2 TECHNICAL SPECIFICATION ADDITIONS 7-2
7.2.1 Technical Specifications 7-2
7.2.2 Compressed Air Pipe Pressure Test 7-2

SECTION 8.0 CONTRACTOR GENERATED CONSTRUCTION DRAWINGS 8-1

LIST OF TABLES

Table No.	Description
2-1	Summary of Field Sampling Analysis
6-1	Submittal Register
6-2	Testing and Analysis Quality Control Log

LIST OF FIGURES

Drawing No.	Title
C-1	Title Sheet With Site Location Map
C-2	General Notes and Legends
C-3	Site Plan
C-4	Piping and Instrumentation Diagrams
C-5	Treatment Building Piping and Electrical Plan
C-6	Soil Vapor Extraction Well Details and Pipe Trench Cross Section Details
C-7	Biosparge Well Detail and Pitot Tube with Differential Pressure Indicator Detail
C-8	Miscellaneous Details
E-1	Electrical Plan Details
E-2	Electrical Line Diagram and Control Logic
5-1	Hospital Location Map
6-1	Project Organization Chart

LIST OF APPENDICES

APPENDIX A **CONSTRUCTION SCHEDULE**

APPENDIX B **TECHNICAL SPECIFICATIONS**

SECTION 1.0

INTRODUCTION

As part of the installation, operation, and maintenance of the soil and groundwater treatment system at Building LCH-4015 located on Camp Lejeune, North Carolina, and as outlined in Specification 01010, **General Paragraphs**, J.A. Jones Environmental Services Company (J.A. Jones) has been retained by the Department of the Navy Atlantic Division, Naval Facilities Engineering Command (NAVFAC), to prepare this site-specific work plan addendum. The ultimate purpose of the design effort defined in the specification is to prepare detailed plans for implementing the soil and groundwater treatment system. The purpose of this site-specific work plan addendum is to describe the effort necessary to design and implement the soil and groundwater treatment system. This work plan addendum addresses the site-specific project activities and serves as a supplement to the principal work plan prepared for Delivery Order No. 35. The principal work plan provides the required scope of services for all hydrocarbon restoration projects completed at the Camp Lejeune Marine Corps Base under this contract.

The work scope includes the construction and operation of a soil and groundwater treatment system consisting of 38 vertical biosparge wells and five horizontal soil vapor extraction (SVE) wells.

This work plan addendum is organized into seven sections of text including an eighth section which provides the construction drawings. In addition, the work plan addendum includes two appendices.

Section 1.0 Introduction of this site-specific work plan addendum includes the site history, the required scope of work, and individual project schedule. The principal work plan provides a brief description of the reporting requirements.

Section 2.0 Sampling and Analysis Plan of this site-specific work plan addendum provides the total petroleum hydrocarbon (TPH) site rehabilitation levels for soil accumulated during on-site excavation activities. The site-specific plan also provides project sample locations, sample collection frequency, and the required laboratory analyses for operation and maintenance activities. The principal work plan outlines the sample collection methodology including sample handling, labeling, and required collection of quality assurance and quality control samples.

Section 3.0 Waste Stream Management Plan, **Section 4.0 Environmental Protection Plan**, and **Section 5.0 Site Health and Safety Plan** are provided in the principal work plan and are incorporated by reference in this work plan addendum.

Section 3.0 Waste Stream Management Plan of the principal work plan discusses the characterization, disposal, handling, and transportation of hydrocarbon wastes encountered or accumulated during the work completed at Camp Lejeune. If hydrocarbon wastes are expected to be encountered during site-specific project activities, the work plan addenda will address the characterization and management of hazardous waste.

Section 4.0 Environmental Protection Plan of the principal work plan addresses the Environmental Protection Plan in accordance with the requirements of Section 4.0, Part 4 of the Basic Contract.

Section 5.0 Site Health and Safety Plan of the principal work plan addresses project specific health and safety issues for the project construction activities completed at Camp Lejeune.

Section 6.0 Quality Control Plan of this work plan addendum provides the testing and analysis quality control log documenting the results of the required field tests completed during construction activities. The Quality Control Plan also provides the submittal register which outlines project-related submittals and their projected submittal date. The site-specific project organization for this delivery order is also included in this work plan addendum. The remaining sections of **Section 6.0 Quality Control Plan** are presented in the principal work plan. The principal work plan details the quality administrators and the definable features of work for each project site.

Section 7.0 Technical Specifications addresses additions and modifications to the technical specifications; and **Section 8.0 Contractor Generated Construction Drawings** presents the construction drawings required to complete the installation of the soil and groundwater treatment system.

The following support documents are presented as appendices to this work plan addendum:

- **Appendix A Construction Schedule**
- **Appendix B Technical Specifications**

1.1 SITE HISTORY AND PROJECT OBJECTIVES

Building LCH-4015 is located in the Midway Park Area of Marine Corps Base Camp Lejeune and is reportedly a former petroleum bulk storage and maintenance facility. According to information provided in the Comprehensive Site Assessment Report, dated June 7, 1996, prepared by Law Engineering and Environmental Services, Inc. (Law), petroleum-impacted soil and groundwater present at the site were suspected to be caused by a release of diesel fuel and gasoline from the former pipeline distribution network for the Building LCH-4015 tank farm. The aboveground storage tanks (ASTs) and their

associated piping were installed around 1945. The pipeline distribution network consisted of four former ASTs located within Building LCH-4015 and their associated underground fuel lines. Two of the former ASTs were 14,000-gallon gasoline tanks that supplied fuel to four gasoline dispensers located on a pump island to the north of the building. Number 2 fuel oil was supplied from a third 14,000-gallon AST to a dispenser located on the north side of Building LCH-4015. The fourth former AST was a 3,000-gallon diesel fuel tank that supplied number 2 fuel oil to a boiler contained within Building LCH-4014. The first indication of a suspected release was identified in November, 1994, when R.E. Wright Environmental, Inc. identified petroleum-impacted soil and groundwater at the site during their "Five Well Site Check" investigation. In 1990, the tanks at Building LCH-4015 were emptied of product, and the three 14,000-gallon ASTs were removed, relocated, and reinstalled for use at other locations on the base. The horizontal and vertical extent of product and petroleum-impacted soil and groundwater were documented in the Corrective Action Plan, dated August 27, 1996, prepared by Law.

The project objectives are to install and operate the soil and groundwater treatment system. Environmental restoration objectives include the reduction in concentration of adsorbed petroleum hydrocarbons contained in vadose zone soil and the reduction of dissolved-phased petroleum hydrocarbons in groundwater beneath the project site.

Groundwater treatment will be accomplished by injecting compressed air into the groundwater through 38 vertical biosparge wells installed to a depth of approximately 8.5 feet below land surface (ft bls). Five horizontal soil vapor extraction wells will be installed in the vadose zone between the water table and ground surface. The soil and groundwater treatment system is designed to reduce the elevated groundwater constituents detected at the site to rehabilitation levels regulated by the North Carolina Department of Environment, Health and Natural Resources (NCDEHNR). These site rehabilitation goals are provided in the North Carolina Administrative Code (NCAC) Title 15A Subchapter 2L *Classifications and Water Quality Standards Applicable to the Groundwaters of North Carolina.*

According to the Corrective Action Plan, dated August 27, 1996, prepared by Law, the primary groundwater contaminants identified at the site are benzene, ethylbenzene, xylenes, methyl tert-butyl ether (MTBE), naphthalene, 1-methylnaphthalene, 2-methylnaphthalene, and benzo(k)flouranthene. The maximum detected groundwater concentrations of these contaminants, as presented in the Corrective Action Plan, with their corresponding site rehabilitation levels, as established in NCAC Title 15A Subchapter 2L, are provided as follows.

Groundwater Constituent	Maximum Detected Concentration	Site Rehabilitation Concentration
Benzene	10,600 µg/l	1.0 µg/l
Ethylbenzene	2,960 µg/l	29 µg/l
Total Xylenes	9,960 µg/l	530 µg/l
MTBE	256 µg/l	200 µg/l
Naphthalene	524 µg/l	21 µg/l
1-Methylnaphthalene	271 µg/l	*
2-Methylnaphthalene	345 µg/l	*
Benzo(k)flouranthene	9.4 µg/l	*

The asterisk (*) indicates that no numerical standard has been established. As a result, according to NCAC Title 15A Subchapter 2L, the target rehabilitation concentration is the laboratory detection limit.

The objectives for petroleum-impacted soil include eliminating the adsorbed hydrocarbons as an ongoing source of groundwater contamination through leaching and desorption and complying with NCDEHNR guidelines which require treatment and/or removal of all soil containing petroleum hydrocarbons in excess of target rehabilitation concentrations. The site-specific NCDEHNR target rehabilitation concentrations for vadose zone petroleum-impacted material are provided in the Corrective Action Plan, dated August 27, 1996. These final rehabilitation levels established for TPH are 40 milligrams per kilogram (mg/kg) using United States Environmental Protection Agency (USEPA) Method 5030 and 160 mg/kg using USEPA Method 3350.

The following documents prepared by Law were utilized by J.A. Jones in its preparation of this work plan addendum and the contractor construction drawings.

Statement of Work Package for Subsurface Petroleum Remediation, dated September 25, 1996
Corrective Action Plan, dated August 27, 1996
Comprehensive Site Assessment Report, dated June 7, 1996

1.2 SCOPE OF WORK

1.2.1 Mobilization/Setup of Construction Temporary Facilities and Site Controls

This task will consist of the mobilization of personnel and equipment to the work site and establishing temporary facilities, including decontamination and material stockpile areas. The temporary facility will include portable sanitary facilities, an equipment laydown area, a stockpile area, a decontamination area, and a site refuge area. J.A. Jones will

utilize their Camp Lejeune office located at Lot 203, Holcomb Boulevard during completion of the on-site project activities. Temporary storage facilities for material and equipment are located on Wilson Boulevard. Prior to the commencement of construction, the biosparge well, soil vapor extraction well, and trench locations will be marked, and an underground utility survey will be performed. Site controls such as construction barricades, security fencing, and sediment control features will be installed during this phase. Project management and scheduling activities, including contractor coordination, will be achieved from the J.A. Jones on-site temporary office equipped with telephone and facsimile capabilities. Office supplies, field equipment, and personal protective equipment (PPE) will be stored in the office trailer or storage trailer.

Prior to the commencement of any trenching or well installation activity, J.A. Jones will conduct a utility clearance survey and prepare the decontamination, site refuge, equipment laydown, and soil staging/stockpile areas. The trenching areas at the work site will be marked with paint and stakes, as appropriate; and an underground utility survey will be conducted by contacting No Cuts, Inc. If necessary, J.A. Jones will coordinate with Base Maintenance to acquire utility layout plans of the area. Utilities which intersect an excavation area will be physically verified by a locating service. All marked utility lines in areas of excavation will be uncovered with hand tools. In addition, the progress of excavation activities conducted with machinery will be continuously monitored for signs of buried obstructions. Except in the vicinity of underground utilities, excavation and trenching will be conducted using a backhoe loader or trackhoe excavator provided by J.A. Jones. Uncovered utilities will be supported to prevent damage and will remain uncovered until the analytical results are reviewed and/or permission to backfill is received from the contracting officer. Any resulting damage to underground utilities or subsurface structures will be immediately reported to the resident officer in charge of construction (ROICC) and subsequently repaired by J.A. Jones via methods approved by the ROICC.

Erosion control will consist of silt fences, which will be installed as outlined in **Section 4.0 Environmental Protection Plan** and **Appendix B Erosion and Sediment Control Plan** of the principal work plan. The **Erosion and Sediment Control Plan**, provided in **Appendix B** of the principal work plan, outlines the procedures to be implemented at the site to prevent sediment migration and erosion. Detail D, **Figure C-8** provides a detail of the staked silt fence to be installed along the ends of the pipe trench excavations and by any drainage features. Plastic sheeting, silt fences, and hay bales will be available on-site should weather conditions warrant covering and berming staged material to control runoff or dust, or if it becomes necessary to contain soil in the staging area overnight. Detail G, **Figure C-8** depicts the use of straw bales around the perimeter and plastic sheeting over the stockpile. In addition, any excavation left open overnight will require temporary fencing around the perimeter. Detail E, **Figure C-8** shows a detail of the temporary barricade fencing.

Trenching activities will generate debris including asphalt, concrete, and packaging materials. Asphalt and concrete material will be collected daily and disposed of in an on-site waste collection container. When the container reaches its capacity, it will be transported to a facility permitted to accept construction and demolition debris.

1.2.2 Soil Vapor Extraction Pilot Study

Law recommends in its Final Statement of Work Package, dated September 25, 1996, one horizontal SVE well installed adjacent to Buildings LCH-4014 and LCH-4034 to prevent soil vapor migration in these buildings during operation of the biosparge system. J.A. Jones recommends additional horizontal SVE wells to effectively recover the soil vapor accumulated during operation of the biosparge system and to minimize the potential for soil vapor migration and the positive pressure gradient under the asphalt surface areas caused by the operation of the biosparge system. The preliminary design depicting the layout of the horizontal SVE wells is shown on **Figure C-3**.

The information obtained during the pilot study will be utilized in the design, equipment selection, and operation of the SVE system. Specifically, data obtained during the pilot study will be utilized to evaluate the number and spacing of the soil vapor extraction wells, the radius of influence, the extraction system flow rate, and the size of the extraction system.

The objectives of the SVE pilot study will be to evaluate the removal efficiency of the SVE system and to obtain design data to evaluate and modify, if necessary, the proposed design layout of the soil vapor extraction system.

One horizontal soil vapor extraction well screen, approximately 20 feet in length, will be utilized to recover soil vapor during the pilot study. This SVE well screen will simulate the actual operating conditions of the full-scale soil vapor extraction system. The pilot test will be conducted in an asphalt paved area during biosparge trenching activities. The soil vapor extraction well screen will be constructed of 0.02-inch slot width Circumslot™ polyvinyl chloride (PVC) well screen installed to a depth of approximately two ft bls.

During operation of the pilot study, the influence of the applied vacuum on the horizontal well screen will be monitored using four 2-inch diameter soil vapor pilot study wells installed at 10-foot intervals from the center of the 20-foot horizontal SVE well screen. The pilot study wells will be constructed to a depth of approximately two ft bls with a screen interval from the existing ground surface to approximately two ft bls. The pilot study wells will be installed by drilling an 7.88-inch diameter borehole with a 4.25-inch inside diameter hollow-stem auger. Each pilot study well casing/screen assembly will be inserted into the borehole through the hollow-stem auger. These wells will be constructed with a two-foot section of 2-inch diameter, 0.02-inch slot width Circumslot™ PVC well screen screw coupled to six inches of 2-inch diameter schedule 80 PVC well casing. No glues of adhesives will be used to connect the casing sections or screens. The sand pack in each well will consist of 6/20 graded silica sand that is appropriate for the

formation and slot size of the screen. The sand pack will be placed in the annulus between the casing and borehole. These soil vapor pilot study wells will be installed during biosparge well drilling activities.

The trailer-mounted SVE pilot system will be configured to allow vapors to pass through a pitot tube with differential pressure indicator (DPI), a moisture separator, and a particulate filter prior to the positive displacement vacuum blower. Recovered soil vapor will be discharged directly to the atmosphere.

At test start-up, a vacuum of 5 inches of water will be applied at the horizontal well screen for approximately 15 minutes and a sample will subsequently be collected for volatile aromatics using USEPA Method 18 to evaluate the vapor extraction effluent. Following start-up of the SVE pilot system, vacuum measurements and the extracted vapor flow rate will be recorded at 3 minute intervals at the horizontal SVE well screen and the soil vapor pilot study well locations. The extracted vapor flow rate will be measured using the pitot tube with the DPI. The applied vacuum will be increased at 15 minute intervals to evaluate the operating conditions at various increased vacuum extraction rates. Five tests will be completed with the applied vacuum ranging from 5 to 25 inches of water. The number of pilot tests may be modified based on an evaluation of the applied vacuum influence on the recovered soil vapor and vadose zone interstitial soil particle water.

At the conclusion of the pilot study, the soil vapor pilot study wells will be removed and the asphalt repaired as shown in detail J, **Figure C-8**.

Upon completion of the pilot study, J.A. Jones will evaluate the results and select the size and spacing of the horizontal soil vapor extraction wells, the design vacuum and flow rates, and the size of the equipment used in the horizontal soil vapor extraction system.

1.2.3 Biosparge Well Installation

Thirty-eight 2-inch diameter vertical biosparge wells will be constructed to a depth of approximately 8.5 ft bls with a screen interval from approximately 6 to 8.5 ft bls. The biosparge wells will be installed by drilling an 7.88-inch diameter borehole with a 4.25-inch inside diameter hollow-stem auger. Each biosparge well casing/screen assembly will be inserted into the borehole through the hollow-stem auger. These wells will be constructed with a 2.5-foot section of 2-inch diameter, 0.02-inch slot width Circumslot™ PVC well screen screw coupled to 4.5 feet of 2-inch diameter schedule 80 PVC well casing. No glues of adhesives will be used to connect the casing sections or screens.

The sand pack in each well will consist of 6/20 graded silica sand that is appropriate for the formation and slot size of the screen. The sand pack will be placed in the annulus between the casing and borehole and will extend one-foot above the top of the screen. A bentonite pellet seal one-foot thick will be placed immediately above the sand pack. Type I Portland cement grout will be placed in the remaining annular space to the bottom

of the two by two by two-foot manway. The well locations are depicted in the site plan shown in **Figure C-3**. A detail of the biosparge well is shown in detail B, **Figure C-7**.

The biosparge wells will be developed by inserting a decontaminated hose into the well and pumping the water from each well with a centrifugal pump. The groundwater removed during development activities will be collected in 55-gallon drums, sampled in accordance with **Section 2.4 Biosparge Well Development and Monitoring Well Purge Water** of this work plan addendum, and delivered to an existing operational groundwater recovery and treatment system located at the Camp Lejeune Marine Corps Base designed to treat petroleum-impacted water.

1.2.4 Soil Vapor Extraction Well Installation

This section outlines the preliminary design layout of the horizontal soil vapor extraction wells. The preliminary layout depicted in **Figure C-3**, will be modified prior to installation once the results of the SVE pilot study are evaluated by J.A. Jones. The spacing and size of the horizontal soil vapor extraction wells may be modified based on the results of the SVE pilot test.

The preliminary design layout of the SVE system consists of five horizontal soil vapor extraction wells used to collect the vapors generated during biosparging. Each horizontal soil vapor extraction well, constructed of 2-inch diameter, 0.02-inch slot width Circumslot™ PVC well screen, will be installed at an approximate depth of 2 ft bls in a 12 by 26-inch trench. Proposed well screen lengths for soil vapor extraction wells SVE1, SVE2, SVE3, SVE4, and SVE5 will be approximately 120, 275, 25, 295, and 170 linear feet, respectively. Each well screen will be placed in washed pea gravel with a layer of geotextile fabric encompassing the pea gravel layer. In areas of vegetation, a layer of 10 mil polyethylene sheeting will be placed on top of the pea gravel layer to minimize the potential of the soil vapor extraction system short-circuiting by drawing outside air into the system. The well locations are depicted in the site plan shown in **Figure C-3**. The construction details for the proposed horizontal soil vapor extraction wells are shown in detail C and detail O, **Figure C-6**.

1.2.5 Trenching and Pipe Installation

The pipe trenches for the biosparge headers, the soil vapor extraction well casing, and the five horizontal soil vapor extraction wells will be excavated according to the site plan presented in **Figure C-3**. The maximum depth of the pipe trench will be approximately twenty-six inches bls. Means of egress from trench excavations are required for depths of four feet or more according to the Occupational Safety and Health (OSHA) regulations outlined in 29 CFR part 1926.651(c)(2). Protective systems such as shoring or sheeting, are required for depths of five feet or more according to the OSHA regulations provided in 29 CFR part 1926.652(a)(1)(ii). The protective system regulation requires that the ground be examined by a competent person and that there is no indication of a potential cave-in. The United States Army Corps of Engineers, *Safety and Health Requirements*

Manual, (EM 385-1-1, October 1992) also requires a protective system in trench excavations of five feet or more. Because the trench floor will be approximately twenty-six inches bls at its deepest point, shoring and/or sheeting will not be required.

In the event that rainfall occurs during excavation activities, standing water will be removed prior to the placement of materials or backfill. Water accumulated in trenches where petroleum-impacted soil is not present will be pumped from the pipe trenches to an area in the immediate vicinity of the excavations if water readily infiltrates the local ground surface (i.e., infiltrates with no ponding, no run-off to surface water bodies, and no run-off to storm drains or sanitary sewers). In areas of known petroleum-impacted soil, the water will be containerized, properly labeled, sampled/analyzed in accordance with **Section 2.4 Biosparge Well Development and Monitoring Well Purge Water** of this work plan addendum, and hauled to a groundwater recovery and treatment system located at the Camp Lejeune Marine Corps Base designed to treat petroleum-impacted water. Ponded water from on-site excavations will not be discharged without the ROICC's approval. It is anticipated that dewatering activities will not be required at the site since the maximum trench excavation will be approximately one foot above the highest observed seasonal groundwater elevation. However, if dewatering is required during trenching activities, a dewatering plan will be prepared and submitted to the Navy for approval.

Compressed air will be supplied to the biosparge wells through two biosparge headers. Biosparge header no. 1 which conveys compressed air to biosparge wells BS1 through BS6, BS10 through BS12, BS16 through BS18, BS20 through BS23, and BS26 through BS28 will be constructed of approximately 780 linear feet of 1-inch diameter Air-Pro™ high density polyethylene (HDPE) compressed air pipe installed at a depth of approximately 16 inches in a trench approximately two ft bls. Biosparge header no. 2 which conveys compressed air to biosparge wells BS7 through BS9, BS13 through BS15, BS19, BS24, BS25, and BS29 through BS38 will be constructed of approximately 950 linear feet of 1-inch diameter Air-Pro™ HDPE compressed air pipe installed at a depth of approximately 16 inches in a trench approximately two ft bls. The location of the horizontal biosparge headers is shown in **Figure C-3**.

The proposed vapor recovery system will consist of four horizontal soil vapor extraction headers constructed of 2-inch diameter, schedule 40 PVC pipe. Each soil vapor extraction header will be installed at an approximate depth of two ft bls. SVE header no. 1, approximately 80 linear feet, receives recovered soil vapor from vapor extraction wells SVE1 and SVE3. SVE header no. 2, approximately 60 linear feet, SVE header no. 3, approximately 135 linear feet, and SVE header no. 4, approximately 315 linear feet, receives recovered soil vapor from vapor extraction wells SVE2, SVE4, and SVE5, respectively. The location of the horizontal soil vapor extraction headers is shown in **Figure C-3**.

1.2.6 Treatment System Installation

Treatment system installation will occur following placement of the concrete foundation and the building structure. The treatment facility will be a pre-fabricated metal building with insulated, removable panels as shown in detail K, **Figure C-5**. Installation will include the placement and anchoring of equipment. The biosparge system will consist of an air compressor with in-line filter, regulator, and flow meter. The vapor recovery system will be configured to allow vapors to pass through a moisture separator and a particulate filter prior to the positive displacement vapor extraction vacuum blower. Recovered soil vapor will be discharged directly to the atmosphere. A vertical polyethylene storage tank will be used to store condensate from the air compressor. In addition, fluid from the moisture separator will be pumped to the storage tank. Following placement and installation of the entire system, the equipment will piped, wired, and tested for proper operation.

The proposed location of the treatment facility may be modified based on an evaluation of demolition operations to Building LCH-4015.

Treatment system startup will be performed upon completion of all system testing. System startup will be followed by 180 days of operation and maintenance.

1.2.7 System Testing

All system components will be tested in accordance with technical specification outlined in section 01012, paragraph 3.14. A Start-up and Testing Report will be submitted upon completion of all testing requirements.

1.2.8 Site Restoration

All excavations will be returned to their specified grades. Top soil will be placed in areas to be seeded with grass and vegetation. The seed will match existing vegetation and will be placed at five pounds per 1000 square feet. CID A-A-1909, Type I, Class 2, 10-10-10 analysis fertilizer will be provided at 25 pounds per 1000 square feet.

Asphalt will be replaced in accordance with detail J, **Figure C-8.** A minimum of eight inches of stone base course aggregate, ABC limerock, meeting the gradation requirements of the North Carolina Department of Transportation (NCDOT) will be placed on the fill material compacted to 95 percent of American Society of Testing and Materials (ASTM) D 698. A minimum of two and one half inches of prime coat and bituminous pavement will be placed to match the existing type and thickness.

Fill material placement and the placement of the treatment building concrete pad will be completed in accordance with the requirements provided in **Section 2.3.1 Concrete** and **Section 2.3.2 Backfill and Fill Material Testing** of the principal work plan. These required tests include concrete mix design tests and density tests for material placed

under slabs or areas to be repaved. Concrete will be placed in accordance with detail F, **Figure C-8**.

Fill, pavement, and concrete specifications are provided in **Appendix B Technical Specifications**.

1.2.9 Demobilization

During demobilization, temporary facilities, utilities, and equipment will be removed from the site. In addition, any debris or solid waste material remaining from construction activities will be removed and placed in solid waste receptacles.

1.2.10 Operation and Maintenance

The treatment system will be started, operated, and maintained for a period of 180 days. Collection of groundwater samples from existing on-site monitoring wells and air quality samples from the soil vapor extraction system will be conducted as specified in **Section 2.0 Sampling and Analysis Plan** of the work plan addendum. An operation and maintenance manual that outlines the required field procedures and proper documentation for sampling, normal operation, and troubleshooting will be provided to the Navy at the completion of the scheduled 180 day operation and maintenance period. At the completion of operation and maintenance activities, the soil and groundwater treatment system will be turned over to the Navy for operation.

Technical personnel performing scheduled operation and maintenance activities will provide oversight of the system operation and collect the required treatment system and groundwater monitoring well samples. The Site Quality Administer (SQA) and technical personnel will verify that the system is operating in accordance with the technical specifications. The technical personnel will provide a weekly report to the project manager for review.

1.3 PROJECT SCHEDULE

The project construction activities and estimated completion periods are outlined below. Several of the construction activities will occur concurrently; and the expected duration from the pre-construction conference through demobilization will be approximately 12 weeks. Pre-construction preparatory activities are not included in the 12 weeks and are expected to be approximately 10 weeks in duration. **Appendix A** provides a construction schedule for the work to be completed at the project site.

Pre-Construction Submittal Preparation and Reviews	10 weeks
Mobilization/Construction of Temporary Facilities	1 week
Survey and Locate Utilities	1 week
Geotechnical Testing	1 week
Vertical Biosparge Well Installation	2 weeks
Soil Vapor Extraction Pilot Test	1 week
Horizontal Soil Vapor Extraction Well Installation	2 weeks
Sampling, Transportation and Disposal of Petroleum-Impacted Material	3 weeks
Equipment Placement and Treatment Building Construction	2 weeks
Electrical Panel and System Structure Wiring	2 week
System Start-up	1 week
Site Restoration and Demobilization	1 week

1.4 TRAFFIC CONTROL PLAN

Traffic control at Building LCH-4015 will be the responsibility of the J.A. Jones site supervisor. Building LCH-4015 is a former petroleum bulk storage and maintenance facility located at the Camp Lejeune Marine Corps Base. The LCH-4015 facility is currently inactive, and its rooms and vehicle servicing bays are utilized for storage. It is anticipated that Building LCH-4015 will be demolished prior to field construction activities. As a result, traffic control and interruption of Naval activities surrounding Building LCH-4015 will be minimized. Building LCH-4015 is located adjacent to the Marine Corps Exchange Seven Day Convenience Store (Building LCH-3034) and the Midway Park Community Center (Building LCH-4014). The area will remain operational during on-site construction activities with minimal disturbance to normal operations. J.A. Jones will coordinate with on-site Marine Corps personnel to evaluate the placement of equipment and laydown areas, soil stockpile locations, and a trenching schedule to minimize the impact on facility operations. When required, traffic barricades, signs, and road guards will guide vehicles around the area(s) of construction. If traffic patterns are altered for an extended period of time, J.A. Jones will notify the ROICC to assist in evaluating alternate traffic patterns. J.A. Jones will review all Marine Corps rules, regulations, and standard operating procedures regarding vehicle movement and control in the designated areas of work.

SECTION 2.0

SAMPLING AND ANALYSIS PLAN

The site-specific Sampling and Analysis Plan outlines the required testing of environmental media including construction materials accumulated during the construction and operation and maintenance phases of each project at the Marine Corps Base, Camp Lejeune. The Sampling and Analysis Plan, provided in this addendum, outlines the required sample locations, frequency, and analyses for the groundwater monitoring wells, soil vapor effluent, development and purge water, and condensate samples collected during operation and maintenance activities. In addition, this Sampling and Analysis Plan provides the required sample locations, frequency, and analysis for waste characterization samples collected during construction activities. **Table 2-1** provides a summary of the sample locations, frequency, and required laboratory analyses. In addition, the Sampling and Analysis Plan, specific to the activities scheduled to be completed in the area of Building LCH-4015, will provide site rehabilitation levels for petroleum-impacted soil encountered during pipe trench excavation activities.

The principal work plan provides sample collection frequency, required analyses, and methodology for waste characterization and incidental samples collected during the construction phase of each project; sample quality assurance/quality control procedures to be maintained during all sample collection activities; and decontamination procedures.

2.1 SOIL SITE REHABILITATION LEVELS

Waste characterization samples will be collected to evaluate handling, transportation, and disposal requirements in the event that petroleum-impacted soil is encountered during pipe trench excavation and biosparge/SVE well installation activities. The soil will be screened using a photoionization detector (PID) in accordance with **Section 2.2.1 Waste Characterization and Incidental Waste Samples** of the principal work plan. Soil samples will be collected in a manner specified in **Section 2.0 Sampling and Analysis Plan** of the principal work plan, delivered to a Navy approved laboratory, and analyzed for TPH using USEPA Methods 3550 and 5030.

Soil that exhibits a TPH concentration greater than 40 mg/kg using USEPA Method 5030 or 160 mg/kg using USEPA Method 3550 will be containerized and hauled to the biocell located at Lot 203, Holcomb Boulevard, in Camp Lejeune, North Carolina.

Soil that exhibits TPH concentrations less than the site rehabilitation levels can be used as trench fill material. Excess soil material not intended to be used at the site but intended to be accepted at the Marine Corps Base borrow pit is required to have TPH

concentrations of less than 10 mg/kg when analyzed using USEPA Methods 3550 and 5030.

2.2 FILL MATERIAL COMPACTION TESTS

The trenches for the two biosparge headers and the four soil vapor extraction headers will be filled with the excavated material below the TPH rehabilitation limits, as outlined in **Section 2.1 Soil Site Rehabilitation Levels** of this work plan addendum, or with other suitable fill material. Fill material will be compacted underneath areas designated for vegetation and areas outside the five-foot line of the structure to 85% of ASTM D 698 as specified in **Section 2.3.2 Backfill and Fill Material Testing** of the principal work plan. The top 12 inches of paved area subgrades and backfill will be compacted to 95% of ASTM D 698. All in-place density tests will be conducted in accordance with ASTM 1556, or ASTM D 2922 and ASTM D 3017. When ASTM D 2922 and ASTM D 3017 density tests are used, the density results will be verified by performing an ASTM D 1556 density test at a location already ASTM D 2922 and ASTM D 3017 tested. Under slabs or areas to be repaved, backfill will be compacted to 95% of ASTM D 698. All other areas will be compacted to 85% percent of ASTM D 698 but will not require a compaction test.

2.3 OPERATION AND MAINTENANCE SAMPLING

2.3.1 Sample Collection Locations

To evaluate the effectiveness of the soil and groundwater treatment system, groundwater samples will be collected from existing on-site groundwater monitoring wells. From an evaluation of the horizontal extent of the groundwater hydrocarbon plume in the area of Building LCH-4015, J.A. Jones requires the collection of groundwater samples from the following 18 monitoring wells: MW-1 through MW-12, MW-14 through MW-18, and MW-19. Maps of the groundwater hydrocarbon plume are provided in the Corrective Action Plan prepared by Law.

An air quality sample will be collected from the vapor recovery system effluent.

Sample collection methodology is outlined in **Section 2.0 Sampling and Analysis Plan** provided in the principal work plan.

2.3.2 Sample Collection Schedule

Following start-up of the soil and groundwater treatment system, groundwater samples will be collected monthly for the first quarter and quarterly thereafter throughout system operation from each of the monitoring wells identified in **Section 2.3.1 Sample Collection Locations**.

Following system start-up, water level measurements will be obtained monthly from the 17 on-site monitoring wells screened across the soil-water interface. These wells are identified as MW-1 through MW-12 and MW-14 through MW-18. These measurements will include product thickness, if present. The information will be used to calculate groundwater elevations and to generate groundwater contour maps that are used in evaluating effectiveness of the soil and groundwater treatment system. In addition, the depth to water measurements are used to evaluate the groundwater flow patterns and the rate of groundwater and contaminant migration.

The air quality effluent sample from the soil vapor extraction system will be collected at system start-up, monthly for the first quarter, and quarterly thereafter.

2.3.3 Laboratory Analyses

Based on the hydrocarbon constituents detected in groundwater samples collected at the site, as presented in the Corrective Action Plan, all groundwater samples collected from monitoring wells identified in **Section 2.3.1 Sample Collection Locations** will be analyzed for volatile aromatic compounds using USEPA Method 602 and polynuclear aromatic hydrocarbons (PAH) using USEPA Method 610.

The effluent sample from the soil vapor extraction system will be analyzed for volatile aromatics using USEPA Method 18.

Each laboratory will be certified in accordance with the NCDEHNR regulations 143-215.3 (a)(1), 143-215.3 (a)(10) and NCAC 2H .0800.

A summary report of all field tests and laboratory analytical results will be submitted to the NTR within 30 days after laboratory receipt of the samples and in accordance with Section C, Part 6.0 of the Basic Contract.

2.4 BIOSPARGE WELL DEVELOPMENT AND MONITORING WELL PURGE WATER

Groundwater accumulated during biosparge well development and monitoring well purging activities will be collected in 55-gallon drums. A sample of the material will be collected and delivered to a Navy approved commercial laboratory, and analyzed for volatile aromatic compounds using USEPA Method 602 and PAH using USEPA Method 610. The groundwater will be hauled to an operational groundwater recovery and treatment system located at Camp Lejeune, North Carolina designed to treat petroleum-impacted water. Alternate methods of treatment/disposal, such as off-site transportation and disposal at a facility permitted to accept petroleum-impacted water, may be evaluated by the Navy prior to scheduled groundwater monitoring well sampling events.

2.5 SOIL VAPOR WATER AND AIR COMPRESSOR CONDENSATE

Condensate collected from the air compressor and the vadose zone interstitial soil particle water recovered from the soil vapor extraction system will be collected in a vertical polyethylene storage tank. The water level present in the tank will be verified during scheduled operation and maintenance inspections. Once the level in the tank is near its capacity, a sample of the material will be collected and delivered to a Navy approved commercial laboratory, and analyzed for volatile aromatic compounds using USEPA Method 602 and PAH using USEPA Method 610. Condensate will be containerized and hauled to an operational groundwater recovery and treatment system located at Camp Lejeune, North Carolina designed to treat petroleum-impacted water. Alternate methods of treatment/disposal, such as off-site transportation and disposal at a facility permitted to accept petroleum-impacted water, may be evaluated by the Navy at the time of condensate removal activities.

Table 2-1
Summary of Field Sampling and Analysis
Building LCH-4015
Marine Corps Base
Camp Lejeune, North Carolina

Sample Description	Sample Location(s)	No. of Events	Number of Samples	Analytical Method	Required Turnaround Time	Comments
Treatment System Sampling	Soil Vapor Extraction Effluent	Monthly for First Quarter and Quarterly Thereafter	1	USEPA Method 18	Normal	Collected During Soil Vapor Extraction System Operation
Monitoring Well Sampling	18 (MW-1 through MW-12, MW-14 through MW-18, MW-19)	Monthly for First Quarter and Quarterly Thereafter	1	USEPA Methods 602 and 610	Normal	Collected During Groundwater and Soil Treatment Operation
Groundwater Level Measurements	17 (MW-1 through MW-12, MW-14 through MW-18)	Monthly	1	None	Normal	Collected During Groundwater and Soil Treatment Operation
Waste Characterization, Incidental Waste Stream, Development and Purge Water, and Condensate Sampling	Groundwater	As Required	1	USEPA Methods 602 and 610	As Needed	(2)
	Soil	As Required	1	USEPA Methods 3550 and 5030	As Needed	Biocell Requirement
Quality Control Sampling	Equipment Blanks	(1)	-	(1)	As Needed	
	Trip Blanks	(1)	-	(1)	As Needed	
	Duplicates	(1)	-	(1)	As Needed	

Notes:
(1) Frequency of quality control sample collection is provided in Table 2-1 QC Sample Frequency of the Principal Work Plan. Required analytical methods are provided in Section 2.0 Sampling and Analysis Plan of the Principal Work Plan.
(2) Petroleum-impacted water will be delivered to a groundwater recovery and treatment system designed to treat hydrocarbon-impacted water at the Camp Lejeune Marine Corps Base. Approval by the Navy will be obtained prior to the delivery of the material to the treatment system.

SECTION 3.0

WASTE STREAM MANAGEMENT PLAN

Section 3.0 Waste Stream Management Plan, provided in the principal work plan, discusses the characterization, disposal, handling, and transportation of hydrocarbon wastes encountered or accumulated during the work completed at Camp Lejeune, Marine Corps Base.

SECTION 4.0

ENVIRONMENTAL PROTECTION PLAN

Section 4.0 Environmental Protection Plan, provided in the principal work plan, addresses the Environmental Protection Plan in accordance with the requirements of Section 4.0, Part 4 of the Basic Contract.

SECTION 5.0

HEALTH AND SAFETY PLAN

Section 5.0 Site Health and Safety Plan, provided in the principal work plan, addresses site-specific health and safety issues for the project construction activities completed at Camp Lejeune.

In the event of a non-emergency medical situation, the nearest hospital to be used is Onslow Memorial Hospital located in Jacksonville, North Carolina. A map depicting the route to Onslow Memorial Hospital from Building LCH-4015 is shown in **Figure 5-1**.

On-site project personnel will be aware of hurricane and foreign object debris (FOD) safety measures during the hurricane season from June 1 to November 30. Procedures for hurricanes and FOD are provided in **Section 5.11.5.4 Inclement Weather Conditions** of the principal work plan.

0 1000 2000 3000

Approximate Scale of Feet

N

From site, turn right onto Lejeune Blvd./State Highway 24 North. Follow Lejeune Blvd. to the intersection with Western Blvd. Turn right onto Western Blvd. and proceed to the corner of Memorial Blvd. Onslow Co. Memorial is on that corner.

J.A. JONES
ENVIRONMENTAL SERVICES

REVISION	DATE	DESCRIPTION	DWN BY	DES BY	CHK BY	APP BY

DATE OF ISSUE

DWN BY _____ CHK BY _____

DES BY _____ APP BY _____

FIGURE 5-1

HOSPITAL LOCATION MAP
RAC ACTION FOR STATEMENT OF WORK DESIGN
BUILDING LCH-4015
MARINE CORPS BASE, CAMP LEJEUNE, NORTH CAROLINA

SECTION 6.0

QUALITY CONTROL PLAN

Section 6.0 Quality Control Plan, provided in the principal work plan, details the quality administrators, the project organization for the work completed at Camp Lejeune under this contract, and the definable features of work for each project site.

6.1 SUBMITTAL REGISTER

The submittal register, included in this section as **Table 6-1**, documents quality control for materials, inspections, and testing in accordance with Section C, Part 7.3 of the Basic Contract. Submittals will be approved by the Navy, Law, or J.A. Jones, as identified in Column D of the register. All approved submittals will be distributed by J.A. Jones to the ROICC (in duplicate), to the project site, and to the project file.

6.2 TESTING AND ANALYSIS QUALITY CONTROL LOG

The testing and analysis quality control log, included in this section as **Table 6-2**, presents the quality control field tests required during on-site construction activities. The testing and analysis control log, completed in the field by the SQA, allows for results to be documented once each test is completed. The date and signature approval of the SQA is also required to be recorded in the log at the completion of each field test.

6.3 PROJECT ORGANIZATION

The site-specific project organization chart, included in this section of the work plan addendum as **Figure 6-1**, depicts the chain-of-command for this delivery order and the individuals responsible for executing the work as indicated.

Table 6-1
Submittal Register
Building LCH-4015
Camp Lejeune, North Carolina

Contract Number: N62470-93-B-3033, Delivery Order No. 37A | Location: Camp Lejeune, North Carolina | Contractor: J.A. Jones Environmental Services Co.
Title: RAC Action for Statement of Work Design, Building LCH-4015

No.	Specification Section Material or Product		Spec. Para. No.	Approved by	Trans Control No.	Planned Submittal Date	Contractor QC Action: Action Code	Contractor QC Action: Date of Action	Contractor QC Action: Date Fwd to to Appr Auth/ Date recd from contractor	Government: Date Fwd to other reviewer	Government: Date recd from other reviewer	Government: Action Code	Government: Date of Action	Contractor: Mailed to Contr / Recd from Appr Auth	Remarks
a	b		c	d	e	f	g	h	i	j	k	l	m	n	o
	DIV 1	**General**													
		SD-09, Reports	---	---	---	---	---	---	---	---	---	---	---	---	---
1	01010	Work Plan Addendum - Draft	1.2.1	NTR	1a	7/1/97		6/24/97							
2	01010	Work Plan Addendum - Final	1.2.1	NTR		8/19/97									
3	01010	Narrative	1.2.1.1	NTR	1	8/15/96		8/15/96				AN	1/14/97		Section 1 of Work Plan
4	01010	Description of Work Tasks	1.2.1.1.a	NTR	1	8/15/96		8/15/96				AN	1/14/97		Section 1 of Work Plan
5	01010	Construction Schedule	1.2.1.1.b	NTR	1a	7/1/97		6/24/97							Work Plan Addendum
6	01010	Installation	1.2.1.1.c	NTR	1a	7/1/97		6/24/97							Work Plan Addendum
7	01010	Storage, Transportation, and Treatment Reqmt.	1.2.1.1.d	NTR	1	8/15/96		8/15/96				AN	1/14/97		Section 3 of Work Plan
8	01010	System Control Logic	1.2.1.1.e	NTR	1a	7/1/97		6/24/97							RAC Construction Drawings
9	01010	Construction Permits Required	1.2.1.1.f	NTR	1a	7/1/97		6/24/97							Work Plan Addendum
10	01010	Technical Specifications Modifications	1.2.1.2	NTR	1a	7/1/97		6/24/97							Section 7 of Work Plan Addendum
11	01010	Environmental Protection Plan	1.2.1.5	NTR	1	8/15/96		8/15/96				AN	1/14/97		Section 4 of Work Plan
12	01010	Health and Safety Plan	1.2.1.6	NTR	1	8/15/96		8/15/96				AN	1/14/97		Section 5 of Work Plan
13	01010	Quality Control Plan	1.2.1.7	NTR	1	8/15/96		8/15/96				AN	1/14/97		Section 6 of Work Plan
14	01010	Submittal Register	1.2.1.7.a	NTR	1a	7/1/97		6/24/97							Table 6-1 of Work Plan Addendum
15	01010	Testing Laboratory Qualifications	1.2.1.7.b	NTR		6/24/97		11/11/96							Laboratory approved for DO No. 27
16	01010	Sampling and Analysis Plan	1.2.1.8	NTR	1	8/15/96		8/15/96				AN	1/14/97		Section 2 of Work Plan
		SD-04, Drawings	---	---	---	---	---	---	---	---	---	---	---	---	---
17	01010	Erosion Control Plan Drawings	1.2.1.4	A&E	1a	7/1/97		7/1/97							Drawing C-7
18	01010	Utility Trench Details	1.2.1.3.b	A&E	1a	7/1/97		7/1/97							Drawing C-6
19	01010	Well Details	1.2.1.3.c	A&E	1a	7/1/97		7/1/97							Drawing C-6
20	01010	Well Head Details	1.2.1.3.d	A&E	1a	7/1/97		7/1/97							Drawing C-6
21	01010	Pavement Repair Details	1.2.1.3.e	A&E	1a	7/1/97		7/1/97							Drawing C-7
22	01010	Equipment Layout Plan	1.2.1.3.f	A&E	1a	7/1/97		7/1/97							Drawing C-5
23	01010	System Schematics	1.2.1.3.g	A&E	1a	7/1/97		7/1/97							Drawing C-4
24	01010	Electrical Site and Power Plan	1.2.1.3.h	A&E	1a	7/1/97		7/1/97							Drawing E-1 & C-3
25	01010	Electrical Panel Schedule and Control Logic	1.2.1.3.i	A&E	1a	7/1/97		7/1/97							Drawing E-2
		SD-05, Design Data	---	---	---	---	---	---	---	---	---	---	---	---	---
26	01010	RAC Design Drawing Calculation Briefs		A&E	2a	7/1/97		7/1/97							
		SD-18, Records	---	---	---	---	---	---	---	---	---	---	---	---	---
27	01010	As-Built Records	1.3.2.1	ROICC		2/13/98									
28	01010	Environmental Conditions Report	1.3.2.2	ROICC		9/19/97									
29	01010	Network Analysis Diagram	1.3.2.3.a	NTR	1a	7/1/97		7/1/97							Appendix A of Work Plan Addendum
30	01010	Status Reports	1.3.2.3.b	Contractor		Monthly									
31	01010	QC Meeting Minutes	1.3.2.4	Contractor		Bi-weekly									
32	01010	Test Results Summary Report	1.3.2.5	NTR		As required									Included in Close-Out Report
33	01010	Contractor Production Report (CPR)	1.3.2.6	Contractor		Daily									Submitted weekly at the QC/Production meeting
34	01010	QC Report	1.3.2.7	Contractor		Daily									Submitted weekly at the QC/Production meeting
35	01010	Rework Items List	1.3.2.8	Contractor		Monthly									
36	01010	Permits	1.3.2.9	ROICC		As required									
37	01010	Digging Permit	1.3.2.9.a	ROICC		9/15/97									Submitted as a letter to B. Rowse - ROICC
38	01010	Start-up and Testing	1.3.2.10	NTR		2/13/98									Included in O&M Manual
39	01010	Contractor's Close-Out Report (Table of Cont.)	1.3.2.11	NTR		1/30/98									
40	01010	Contractor's Close-Out Report	1.3.2.11	NTR		2/13/98									
41	01010	Non-hazardous Waste Manifests	---	Contractor		As required									Included in Close-Out Report
		SD-19, Operation and Maintenance Manuals	---	---	---	---	---	---	---	---	---	---	---	---	---
42	01010	Operation, Maintenance, and Monitoring	1.3.3.1	NTR		4/24/98									Included in O&M Manual
	DIV 1	**Additional General Paragraphs**													
		SD-01, Data	---	---	---	---	---	---	---	---	---	---	---	---	---
43	01011	Traffic Control Plan	1.3.1.a	NTR	1a	7/1/97		7/1/97							Section 1 of Work Plan Addendum

Table 6-1
Submittal Register
Building LCH-4015
Camp Lejeune, North Carolina

Contract Number: N62470-93-B-3033, Delivery Order No. 37A							Location: Camp Lejeune, North Carolina				Contractor: J.A. Jones Environmental Services Co.				
Title: RAC Action for Statement of Work Design, Building LCH-4015							Contractor QC Action				Government			Contractor	
No.		Specification Section Material or Product	Spec. Para. No.	Approved by	Trans Control No.	Planned Submittal Date	Action Code	Date of Action	Date Fwd to to Appr Auth/ Date recd from contractor	Date Fwd to other reviewer	Date recd from other reviewer	Action Code	Date of Action	Mailed to Contr / Recd from Appr Auth	Remarks
a		b	c	d	e	f	g	h	i	j	k	l	m	n	o
		SD-18, Records	---	---	---	---	---	---	---	---	---	---	---	---	---
44	01011	List of Contact Personnel	1.3.2.a	ROICC		9/19/97									
	DIV 1	**Remediation System Installation and Performance**													
		SD-02, Manufacturer's Catalog Data	---	---	---	---	---	---	---	---	---	---	---	---	---
45	01012	Well Head Covers	3.7	A&E		10/15/97									
46	01012	Well Screen	3.6	A&E		10/15/97									
47	01012	Biosparge System	2.3	A&E		10/15/97									
48	01012	Soil Vapor Extraction System	2.4	A&E		10/15/97									
		SD-12, Field Test Reports	---	---	---	---	---	---	---	---	---	---	---	---	---
49	01012	Calibration Tests	1.2.1.1.a	Contractor		As required									Included in Close-Out Report
50	01012	Boring Logs	1.2.1.1.b	Contractor		2/13/98									Included in Close-Out Report
51	01012	NCDEHNR Well Construction Records	1.2.1.1.c	Contractor		11/7/97									Included in Close-Out Report
52	01012	Operation and Monitoring Reports	1.2.1.1.d	Contractor		As required									Included in Quarterly O&M Report
53	01012	Concrete Strength Tests	1.2.1.1.e	Contractor		As required									Included in Close-Out Report
54	01012	Air Emissions Analytical Tests	1.2.1.1.f	Contractor		As required									Included in Quarterly O&M Report
55	01012	Ground Water Analytical Tests	1.2.1.1.g	Contractor		As required									Included in Quarterly O&M Report
		SD-19, Operation & Maintenance Manuals	---	---	---	---	---	---	---	---	---	---	---	---	---
56	01012	Operation & Maintenance Manual	1.2.2.1	A&E		4/24/98									
57	01012	Remediation Equipment	1.2.1.1.a	A&E		4/24/98									
58	01012	Power and Control Panels	1.2.1.1.b	A&E		4/24/98									
59	01012	Wiring & Control Diagrams & Control Sequence	1.2.1.1.c	A&E		4/24/98									
60	01012	Start-up, Adjustment, Lube, & Shut-down	1.2.1.1.d	A&E		4/24/98									
61	01012	Safety Precautions	1.2.1.1.e	A&E		4/24/98									
62	01012	Equipment Failure Procedures	1.2.1.1.f	A&E		4/24/98									
63	01012	Sampling and Analysis Schedule	1.2.1.1.g	A&E		4/24/98									
	DIV 2	**Pavement Removal and Replacement**													
		SD-05, Design Data	---	---	---	---	---	---	---	---	---	---	---	---	---
64	02571	Job Mix Formula	1.2.1	Contractor		10/30/97									
	DIV 16	**Overhead Electrical Work**													
		SD-02, Manufacturer's Catalog Data	---	---	---	---	---	---	---	---	---	---	---	---	---
65	16370	Conductors	1.4.1.a	Contractor		11/6/97									
66	16370	Meter Base	1.4.1.b	Contractor		11/6/97									
		SD-05, Design Data	---	---	---	---	---	---	---	---	---	---	---	---	---
67	16370	Engineering Design Calculations	1.4.2	Contractor		As required									
	DIV 16	**Interior Wiring Systems**													
		SD-02, Manufacturer's Catalog Data	---	---	---	---	---	---	---	---	---	---	---	---	---
68	16402	Switches	2.8	Contractor		11/6/97									
69	16402	Circuit Breakers	2.10.2	Contractor		11/6/97									
70	16402	Transformers	2.12	Contractor		As required									
71	16402	Outlet Boxes and Covers	3.1.6	Contractor		11/6/97									
		SD-04, Drawings	---	---	---	---	---	---	---	---	---	---	---	---	---
72	16402	Panelboards	2.10	Contractor		11/6/97									
73	16402	Transformers	2.12	Contractor		11/6/97									
		SD-08, Statements	---	---	---	---	---	---	---	---	---	---	---	---	---
74	16402	Fuses	2.11	Contractor		11/6/97									

Table 6-1
Submittal Register
Building LCH-4015
Camp Lejeune, North Carolina

Contract Number: N62470-93-B-3033, Delivery Order No. 37A Title: RAC Action for Statement of Work Design, Building LCH-4015							Location: Camp Lejeune, North Carolina				Contractor: J.A. Jones Environmental Services Co.				
							Contractor QC Action			Government				Contractor	
No.	Specification Section Material or Product		Spec. Para. No.	Approved by	Trans Control No.	Planned Submittal Date	Action Code	Date of Action	Date Fwd to to Appr Auth/ Date recd from contractor	Date Fwd to other reviewer	Date recd from other reviewer	Action Code	Date of Action	Mailed to Contr / Recd from Appr Auth	Remarks
a	b		c	d	e	f	g	h	i	j	k	l	m	n	o
		SD-11, Factory Test Reports	---	---	---	---	---	---	---	---	---	---	---	---	---
75	16402	Transformer Tests	2.12	Contractor		As required									
		SD-12, Field Test Reports	---	---	---	---	---	---	---	---	---	---	---	---	---
76	16402	600-Volt Wiring Test	3.2.2	Contractor		12/4/97									
77	16402	GFCI Receptacle Test	3.2.3	Contractor		12/4/97									

Notes:
ROICC - Resident Officer in Charge of Construction
Contractor - J.A. Jones Environmental Services
A&E - Law Engineering & Environmental Services, Inc.
AN - Approved As Noted

Table 6-2
Testing and Analysis Quality Control Log
Building LCH-4015
Marine Corps Base
Camp Lejeune, North Carolina

Spec. No.	Tests	Spec. Par. No.	Quantity	Resp.	Completion Date	Approved	Comments
01012	Fill and Backfill Material Testing	3.5	One for each material used	SQA			Density test will be completed for trench soil fill.
01012	Density Test	3.5	One for every 2500 sf	SQA			Conducted in accordance with ASTM 1556, or ASTM D 2922 and ASTM D 3017.
01012	Compressed Air Pipe Pressure Test	2.3	During Pipe Installation	SQA			Installation shall conform to NFPA 30 and NFPA 30A. The test has been added to Specification 01012, Paragraph 2.3.
01012	Wiring and Ground Test	3.12	After Electrical Installation	SQA			Inside wiring tests completed at factory. Three ground tests completed in the field.
01012	Equipment and Operational Tests	3.14	After Installation	SQA			Operational tests completed at the factory and prior to start-up. A list of equipment to be tested includes the transfer pump, air compressor, vacuum blower, control panel, transformer, all electrical equipment, and fail-safe conditions.
03302	Concrete Slump and Test Cylinders	3.6.2.1	One for each batch	SQA			ASTM C 143. Perform tests at commencement of concrete placement and for each batch (minimum) or every 10 cubic yards (maximum) of concrete. ASTM C 172. Three concrete cylinders will be collected for each 40 yards of concrete.
03302	Air Content	3.6.2.2	One for each batch	SQA			ASTM C 173 or ASTM C 231. Perform tests at commencement of concrete placement and for each batch (minimum) or every 10 cubic yards (maximum) of concrete.

Signed: _____

Figure 6-1
Project Organization Chart
Delivery Order No. 037A: RAC Action for Statement of Work Design
Building LCH-4015
Marine Corps Base, Camp Lejeune, NC

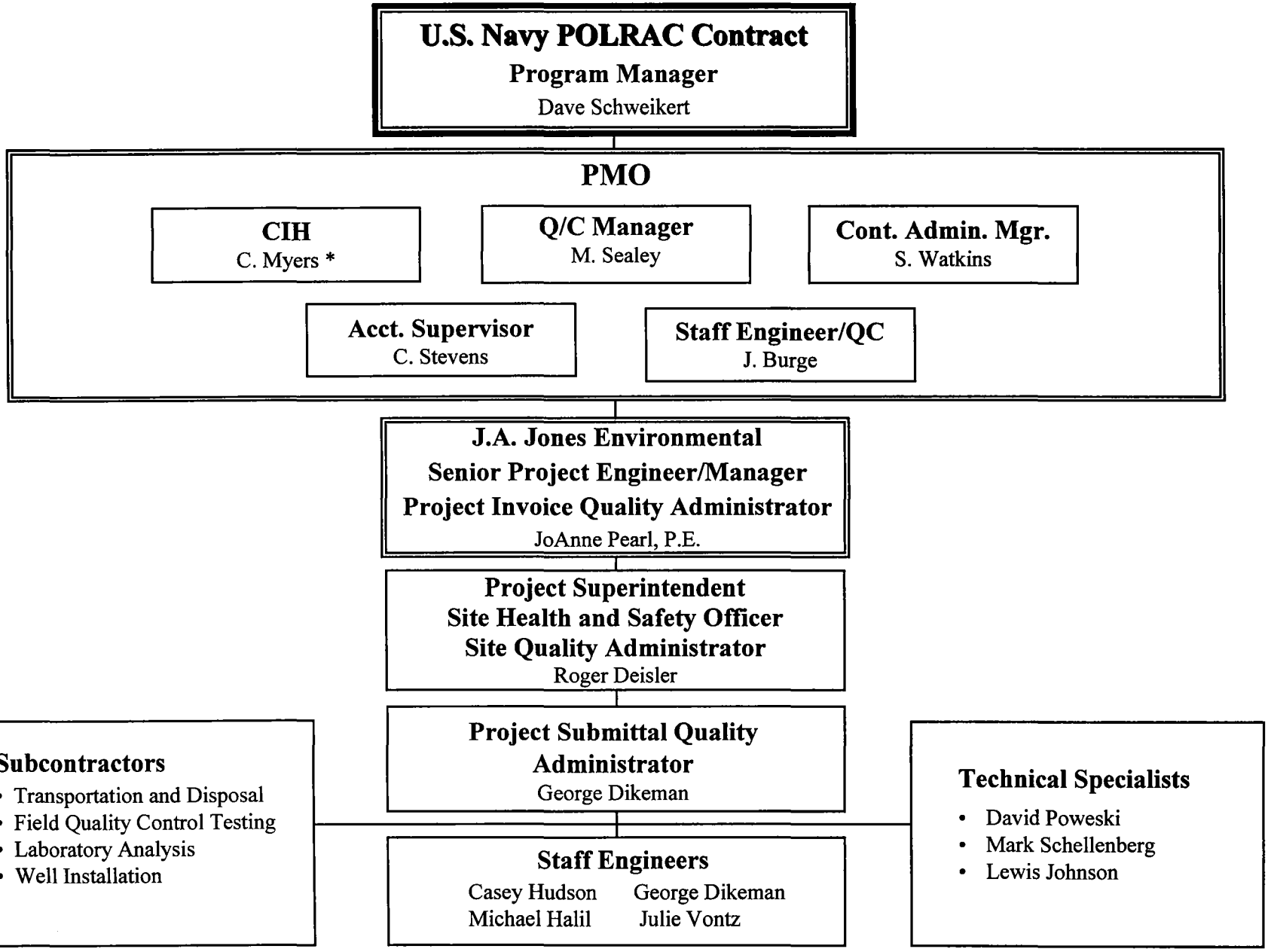

* CDM

SECTION 7.0

TECHNICAL SPECIFICATIONS

Section 7.0 Technical Specifications provides additional specifications to complete the project work activities, and contains modifications to the existing technical specifications prepared by Law. These project specifications prepared by Law are provided as follows.

Section 01010	General Paragraphs (Remedial Action Contracts)
Section 01011	Additional General Paragraphs
Section 01012	Remediation System Installation and Performance

7.1 TECHNICAL SPECIFICATION MODIFICATIONS

7.1.1 Soil Vapor Extraction Wells

Paragraph 2.4 of Specification 01012 specifies one horizontal soil vapor extraction well. This has been modified to include the addition of four horizontal soil vapor extraction wells to effectively capture and control the vapors produced by the 38 vertical biosparge wells. The addition of the soil vapor extraction wells and subsequent soil vapor recovery will minimize the potential for soil vapor migration and the positive pressure gradient under the asphalt surface areas caused by the operation of the biosparge system.

7.1.2 Soil Vapor Extraction Materials

Paragraph 2.4 of Specification 01012 specifies a flow meter to be provided near the terminal ends and at one or more intermediate points of the horizontal soil vapor extraction wells. A pitot tube with differential pressure indicator will be installed on each of the four soil vapor extraction headers inside the equipment building in lieu of a flow meter. The flow will be calculated using the differential pressure. A detail of the pitot tube with DPI is shown in detail L, **Figure C-7**.

7.1.3 Submittal Register

The submittal register presented in **Section 6.0 Quality Control Plan** as **Table 6-1** was modified to include a complete list of project deliverables.

7.2 TECHNICAL SPECIFICATION ADDITIONS

7.2.1 Technical Specifications

The following technical specification sections, prepared by J.A. Jones, have been added to the statement of work design.

Section 02220	General Excavation, Filling, and Backfilling
Section 02571	Pavement Removal and Replacement
Section 03302	Cast-In-Place Concrete
Section 16011	Electrical General Requirements
Section 16370	Overhead Electrical Work
Section 16402	Interior Wiring Systems

These specification sections are presented in **Appendix B**.

7.2.2 Compressed Air Pipe Pressure Test

The specifications for the compressed air pipe pressure test shall be added to Specification 01012, Paragraph 2.3. Installation of the compressed air pipe shall conform to National Fire and Protection Association (NFPA) 30 and NFPA 30A.

SECTION 8.0

CONTRACTOR GENERATED CONSTRUCTION DRAWINGS

The following construction drawings, prepared by J.A. Jones, are provided in this section. The drawings present the required equipment, layout, and details to construct the soil and groundwater treatment system. The site plan, prepared by Law, was utilized in the preparation of the system layout and the piping and instrumentation diagram.

A list of the design drawings, included in this work plan, are provided below.

Drawing No.	Title
C-1	Title Sheet With Site Location Map
C-2	General Notes and Legends
C-3	Site Plan
C-4	Piping and Instrumentation Diagrams
C-5	Treatment Building Piping and Electrical Plan
C-6	Soil Vapor Extraction Well Details and Pipe Trench Cross Section Details
C-7	Biosparge Well Detail and Pitot Tube with Differential Pressure Indicator Detail
C-8	Miscellaneous Details
E-1	Electrical Plan Details
E-2	Electrical Line Diagram and Control Logic

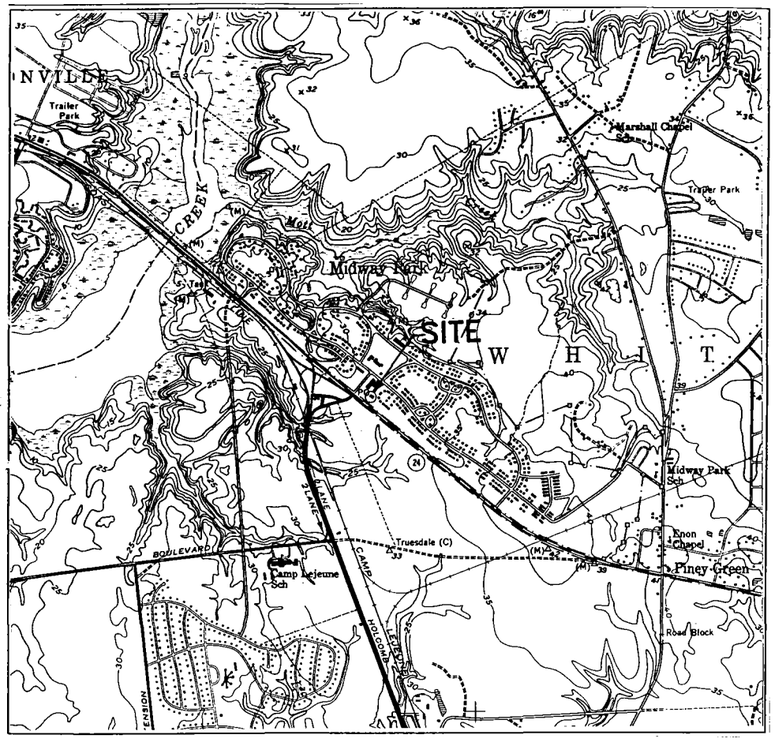

INDEX OF SHEETS

SHEET NO.	DRAWING NO.	SHEET TITLE
SHEET 1 OF 10	C-1	TITLE SHEET WITH SITE LOCATION MAP
SHEET 2 OF 10	C-2	GENERAL NOTES AND LEGENDS
SHEET 3 OF 10	C-3	SITE PLAN
SHEET 4 OF 10	C-4	PIPING AND INSTRUMENTATION DIAGRAMS
SHEET 5 OF 10	C-5	TREATMENT BUILDING PIPING AND ELECTRICAL PLAN
SHEET 6 OF 10	C-6	SOIL VAPOR EXTRACTION WELL DETAILS AND PIPE TRENCH DETAILS
SHEET 7 OF 10	C-7	BIOSPARGE WELL DETAIL AND PITOT TUBE WITH DIFFERENTIAL PRESSURE INDICATOR DETAIL
SHEET 8 OF 10	C-8	MISCELLANEOUS DETAILS
SHEET 9 OF 10	E-1	POWER SUPPLY CONNECTION AND CONTROL PANEL INNER DOOR DETAILS
SHEET 10 OF 10	E-2	ELECTRICAL LINE DIAGRAM AND CONTROL LOGIC

NOTE:

THESE DRAWINGS ARE PREPARED AND CERTIFIED FOR CONSTRUCTION AND/OR PERMITTING PURPOSES ONLY IN COMPLIANCE WITH NCDEHNR-APPROVED CORRECTIVE ACTION PLAN (CAP).

DRAFT

RAC ACTION FOR STATEMENT OF WORK DESIGN
BUILDING LCH-4015
MARINE CORPS BASE
CAMP LEJEUNE, NORTH CAROLINA

SYMBOL	DESCRIPTION	DATE	APPROVED BY
	REVISIONS		

J.A. JONES
ENVIRONMENTAL SERVICES
JACKSONVILLE, FLORIDA
N.E. CONTRACT NO. N62470-93-D-3033

DEPARTMENT OF THE NAVY NAVAL FACILITIES ENGINEERING COMMAND
NAVAL STATION ATLANTIC DIVISION NORFOLK, VIRGINIA

RAC ACTION FOR STATEMENT OF WORK DESIGN
BUILDING LCH-4015
MARINE CORPS BASE
CAMP LEJEUNE, NORTH CAROLINA

TITLE SHEET WITH SITE LOCATION MAP

CODE ID. NO. 80091 SIZE D
SCALE: N.T.S.
EFD NO.
STA. PROJ. NO.
SPEC. NO.
CONSTR. CONTR. NO. N62470-93-D-3033
NAVFAC DRAWING NO.
SHEET 1 OF 10
C-1

GENERAL CONSTRUCTION NOTES

1. LOCATION OF EXISTING UTILITIES SHOWN ARE APPROXIMATE. CONTRACTOR IS RESPONSIBLE FOR LOCATING AND VERIFYING LOCATION OF ALL UTILITIES WITHIN LIMITS TO BE AFFECTED BY CONSTRUCTION.
2. CONTRACTOR TO BE RESPONSIBLE FOR FURNISHING ALL FIELD INFORMATION REQUIRED FOR PREPARATION OF RECORD DRAWINGS BY MAINTAINING A SET OF DRAWINGS IN THE FIELD CURRENT WITH DAILY PROGRESS OF WORK.
3. REFER TO PIPE SPECIFICATIONS FOR TYPE, TESTING REQUIREMENTS, MATERIAL AND DESIGN CONDITIONS FOR INDIVIDUAL PIPE RUNS.
4. ALL SCREWED PIPE CONNECTIONS TO BE MADE BY WRAPPING MALE THREAD WITH TEFLON TAPE PRIOR TO ASSEMBLY. ALL PVC SOCKET TYPE CONNECTIONS TO BE MADE USING SOLVENT WELDING CEMENT ASTM-D2564.
5. ALL PAVEMENT AND CONCRETE CUTS TO BE SMOOTH EDGE SAW CUTS BY CIRCULAR SAW BLADE TYPE CUTTING MACHINE OR CORE DRILLED TO PREVENT CHIPPING OF EXISTING CONCRETE.
6. ALL PAVEMENT AREAS DISTURBED BY TRENCHING TO BE REPLACED IN KIND BY ASPHALT PAVEMENT. ALL GRASSED AREAS DISTURBED BY TRENCHING TO BE REPLACED IN KIND WITH SEED PER SPECIFICATIONS.
7. ALL SOIL BACKFILL TO BE COMPACTED TO 85% OF THE MAXIMUM DRY DENSITY (STANDARD PROCTOR TEST) UNLESS OTHERWISE NOTED IN CONTRACTOR WORK PLAN, OR APPROVED BY ENGINEER.
8. ELECTRICAL CONDUIT TO BE MARKED IN TRENCH BY USE OF METAL LOCATING TAPE.
9. CONTRACTOR TO COORDINATE ALL OPENINGS, SLEEVES, DEPRESSIONS, BOLTS AND OTHER EMBEDMENTS AS ON ALL DRAWINGS AND AS REQUIRED BY ALL TRADES.
10. ALL BURIED LINES TO BE A MINIMUM OF 24" BELOW GRADE, UNLESS OTHERWISE SPECIFIED.
11. NON-SHRINK GROUT TO BE USED WHEN FILLING PIPE SLEEVE PENETRATION VOIDS AND FOR LEVELING PROCESS EQUIPMENT AND PUMPS.
12. PLACEMENT OF GAUGES, INSTRUMENTATION AND METERS TO BE IN SUCH A MATTER THAT THEY ARE EASILY VISIBLE AND ACCESSIBLE.

GENERAL ABBREVIATIONS

ARV	AIR RELIEF VALVE
ASTS	ABOVEGROUND STORAGE TANKS
BV	BALL VALVE
CV	CHECK VALVE
DPI	DIFFERENTIAL PRESSURE INDICATOR
G	GREEN RUNNING LIGHT
GV	GATE VALVE
HDPE	HIGH DENSITY POLYETHYLENE
HS	HAND SWITCH
LAHH	LEVEL ALARM HIGH HIGH
LSH	LEVEL SWITCH HIGH
LSHH	LEVEL SWITCH HIGH HIGH
LSL	LEVEL SWITCH LOW
MW	MONITORING WELL
NTS	NOT TO SCALE
P	PUMP
PI	PRESSURE INDICATOR
PT	PITOT TUBE
PVC	POLYVINYL CHLORIDE
R	RED ALARM LIGHT
SP	SAMPLE PORT
SS	SANITARY SEWER
VI	VACUUM INDICATOR

SITE UTILITIES LEGEND

	WOOD LIGHT POLE
	WOOD UTILITY POLE
	SURVEY BASELINE
SMH	SANITARY SEWER MANHOLE
CB	CATCH BASIN
	TELEPHONE RISER
SD	STORM SEWER
SS	SANITARY SEWER
OH	OVERHEAD UTILITY WIRES
UE	UNDERGROUND ELECTRIC
F	UNDERGROUND FUEL LINES
LP	UNDERGROUND LP LINES

PIPING SYMBOLS

	INSTRUMENT SUPPLY OR CONNECTION TO PROCESS
	ELECTRICAL SIGNAL
	LOGIC CONNECTION
3"	GATE VALVE (SIZE INDICATED IF NOT LINE SIZE)
	CHECK VALVE
	BALL VALVE
	PRESSURE SAFETY RELIEF VALVE
3 x 2	INDICATES LINE SIZE REDUCTION
	PRESSURE REGULATOR
	SAMPLE PORT

SECTION OR DETAIL IDENTIFICATION SYMBOL

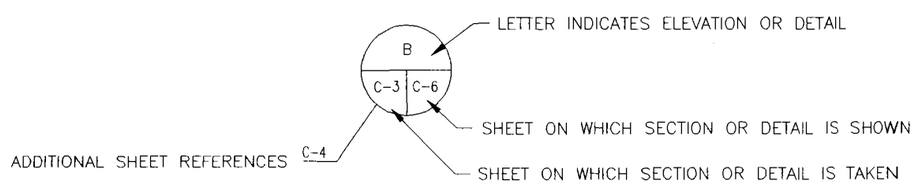

REVISIONS

SYMBOL	DESCRIPTION	DATE	APPROVED BY

J.A. JONES ENVIRONMENTAL SERVICES JACKSONVILLE, FLORIDA

A/E CONTRACT NO. N62470-93-D-3033

DRAFT

DEPARTMENT OF THE NAVY NAVAL FACILITIES ENGINEERING COMMAND
NAVAL STATION ATLANTIC DIVISION NORFOLK, VIRGINIA

RAC ACTION FOR STATEMENT OF WORK DESIGN
BUILDING LCH-4015
MARINE CORPS BASE
CAMP LEJEUNE, NORTH CAROLINA

GENERAL NOTES AND LEGENDS

CODE ID. NO. 80091 SIZE D
SCALE: N.T.S.
EFD NO.
STA. PROJ. NO.
SPEC. NO.
CONSTR. CONTR. NO. N62470-93-D-3033
NAVFAC DRAWING NO.
SHEET 2 OF 10
C-2

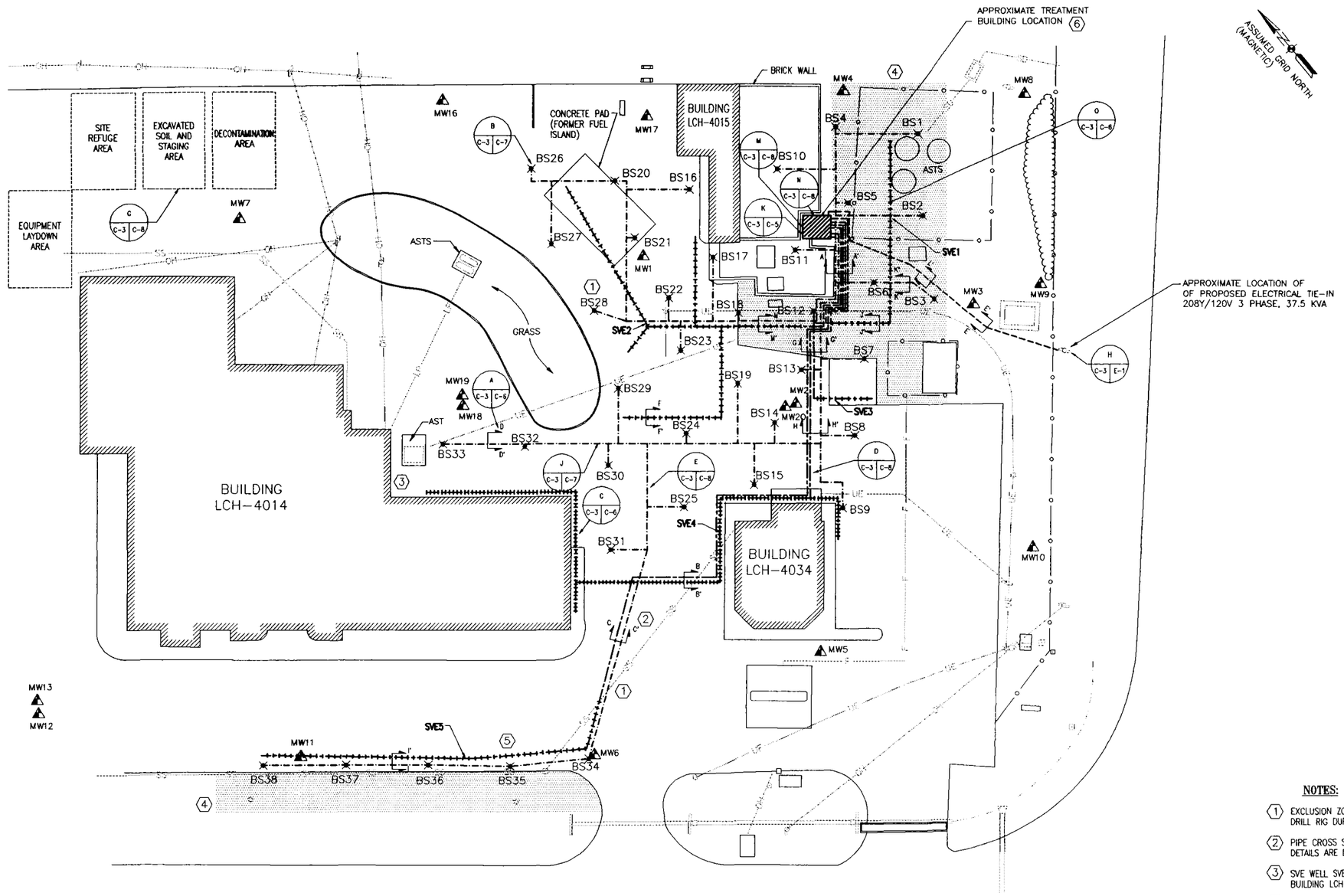

SITE PLAN

APPROXIMATE LOCATION OF OF PROPOSED ELECTRICAL TIE-IN 208Y/120V 3 PHASE, 37.5 KVA

ASSUMED GRID NORTH (MAGNETIC)

LEGEND

- EXISTING BUILDING
- NEW BUILDING
- MONITORING WELL
- WOOD LIGHT POLE
- WOOD UTILITY POLE
- SURVEY BASELINE
- SMH — SANITARY SEWER MANHOLE
- CB — CATCH BASIN
- TELEPHONE RISER
- BS29 — BIOSPARGE WELL
- FENCE
- WOODED AREA
- BRICK WALL
- STORM SEWER
- SANITARY SEWER
- OVERHEAD UTILITY WIRES
- UNDERGROUND ELECTRIC
- UNDERGROUND FUEL LINES
- UNDERGROUND LP LINES
- A / A' — PIPE SECTION

PIPE LEGEND

- SVE CIRCUMSLOT™ PVC WELL SCREEN
- SVE SCH. 40 PVC WELL CASING
- BIOSPARGE AIR-PRO™ HDPE COMPRESSED AIR PIPE
- SCH. 80 PVC ELECTRICAL CONDUIT

NOTES:

1. EXCLUSION ZONE IS PLACED WITHIN 2 FEET OF ALL TRENCHING AND WITHIN 5 FEET OF THE DRILL RIG DURING BIOSPARGE WELL INSTALLATION.
2. PIPE CROSS SECTION DETAILS ARE PROVIDED ON DRAWING C-6. THE PIPE CROSS SECTION DETAILS ARE DESIGNATED BY THE LETTER A.
3. SVE WELL SVE4 SHOULD BE LOCATED AS CLOSE AS PRACTICAL TO THE NORTH SIDE OF BUILDING LCH-4014
4. IN ALL SHADED AREAS OF VEGETATION, TEN INCHES OF EXISTING VEGETATION WILL BE REMOVED AND REPLACED WITH 10 MIL POLYETHYLENE SHEETING. SIX INCHES OF SOIL COMPACTED TO 85% OF ASTM D698 WILL BE PLACED ON THE 10 MIL POLYETHYLENE SHEETING, FOLLOWED BY FOUR INCHES OF TOPSOIL. SEED WILL BE PLACED TO MATCH EXISTING VEGETATION.
5. ASPHALT PAVEMENT WILL BE REPLACED ACCORDING TO DETAIL J ON SHEET C-8.
6. THE PROPOSED TREATMENT BUILDING LOCATION MAY BE MODIFIED BASED ON AN EVALUATION OF DEMOLOTION OPERATIONS TO BUILDING LCH-4015.

HORIZONTAL AND VERTICAL SURVEY CONTROL

SURVEY CONTROL BASED ON MILTARY CONTROL MONUMENT "DRAIN". STATION "DRAIN" IS A 4"ø BRASS DISK SET IN 10"ø CONCRETE MONUMENT SET 3" BELOW THE GROUND. THE STATION IS LOCATED AT THE NORTHWESTERLY END OF THE MEDIAN OF HIGHWAY 24 ON THE SOUTHEASTERLY SIDE OF THE INTERSECTION OF HIGHWAY 24 AND THE ENTRANCE TO MIDWAY PARK. IT IS LOCATED 3.9 METERS WEST/SOUTHWEST OF A STORM DRAIN. THE ELEVATION OF THE STATION IS 9.92 FT.

SYMBOL	DESCRIPTION	DATE	APPROVED BY
	REVISIONS		

J.A. JONES ENVIRONMENTAL SERVICES JACKSONVILLE, FLORIDA

A/E CONTRACT NO. N62470-93-D-3033

ACTIVITY - SATISFACTORY TO: DATE

DRAFT

DEPARTMENT OF THE NAVY — NAVAL FACILITIES ENGINEERING COMMAND
NAVAL STATION — ATLANTIC DIVISION — NORFOLK, VIRGINIA

RAC ACTION FOR STATEMENT OF WORK DESIGN
BUILDING LCH-4015
MARINE CORPS BASE
CAMP LEJEUNE, NORTH CAROLINA

SITE PLAN

CODE ID. NO. 80091	SIZE D
SCALE:	1"=50'
EFD NO.	
STA. PROJ. NO.	
SPEC. NO.	
CONSTR. CONTR. NO.	N62470-93-D-3033
NAVFAC DRAWING NO.	
SHEET	3 OF 10
	C-3

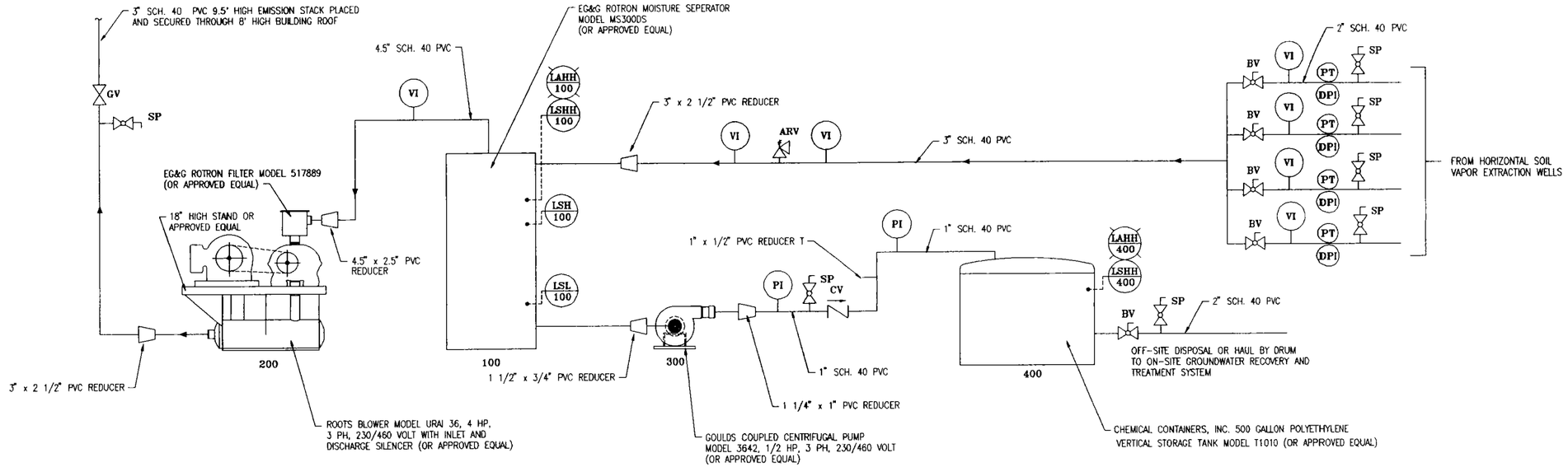

SOIL VAPOR EXTRACTION PIPING AND INSTRUMENTATION DIAGRAM

NOT TO SCALE

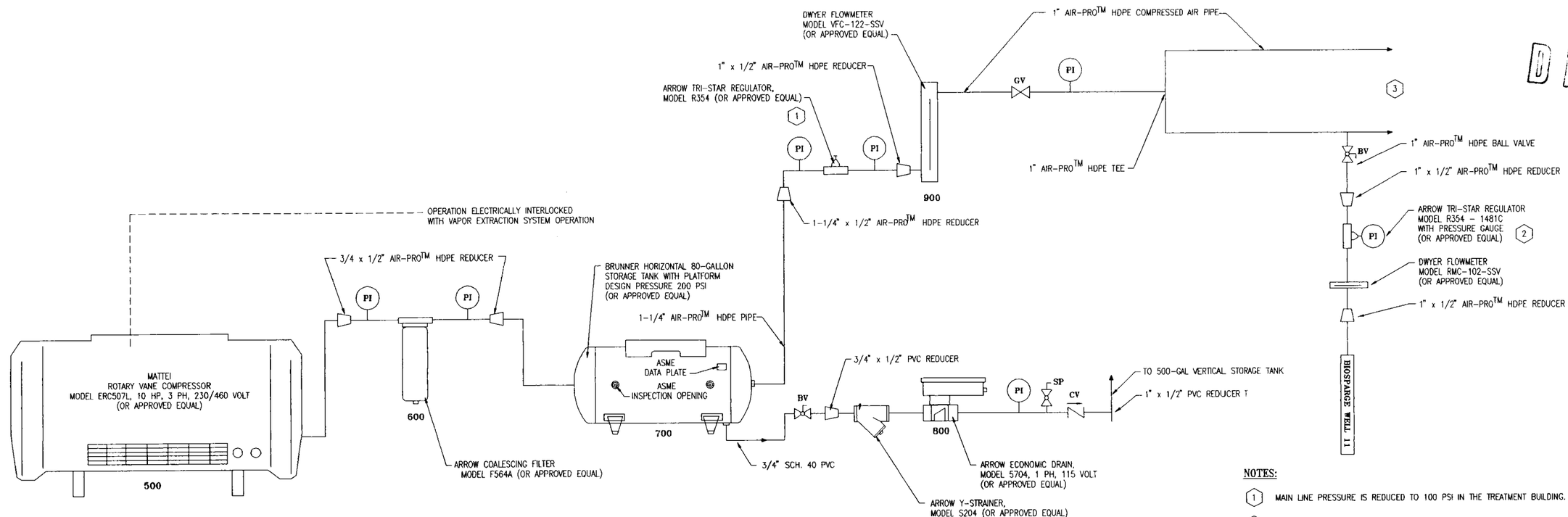

BIOSPARGE PIPING AND INSTRUMENTATION DIAGRAM

NOT TO SCALE

NOTES:

1. MAIN LINE PRESSURE IS REDUCED TO 100 PSI IN THE TREATMENT BUILDING.
2. PRESSURE IS REDUCED TO 3.6 PSI IN EACH BIOSPARGE WELL.
3. TO BIOSPARGE WELLS 1-10 AND 12-38. INSTRUMENTATION SAME AS BIOSPARGE WELL 11.

SYMBOL	DESCRIPTION	DATE	APPROVED BY

REVISIONS

DRAFT

J.A. JONES
ENVIRONMENTAL SERVICES
JACKSONVILLE, FLORIDA

A/E CONTRACT NO. N62470-93-D-3033

ACTIVITY - SATISFACTORY TO: DATE

FOR USE FOR COMMENTS ONLY

DEPARTMENT OF THE NAVY NAVAL FACILITIES ENGINEERING COMMAND
NAVAL STATION ATLANTIC DIVISION NORFOLK, VIRGINIA

RAC ACTION FOR STATEMENT OF WORK DESIGN
BUILDING LCH-4015
MARINE CORPS BASE
CAMP LEJEUNE, NORTH CAROLINA

PIPING AND INSTRUMENTATION DIAGRAMS

CODE ID. NO. 80091	SIZE D
SCALE: N.T.S.	
EFD NO.	
STA. PROJ. NO.	
SPEC. NO.	
CONSTR. CONTR. NO. N62470-93-D-3033	
NAVFAC DRAWING NO.	
SHEET 4 OF 10	

C-4

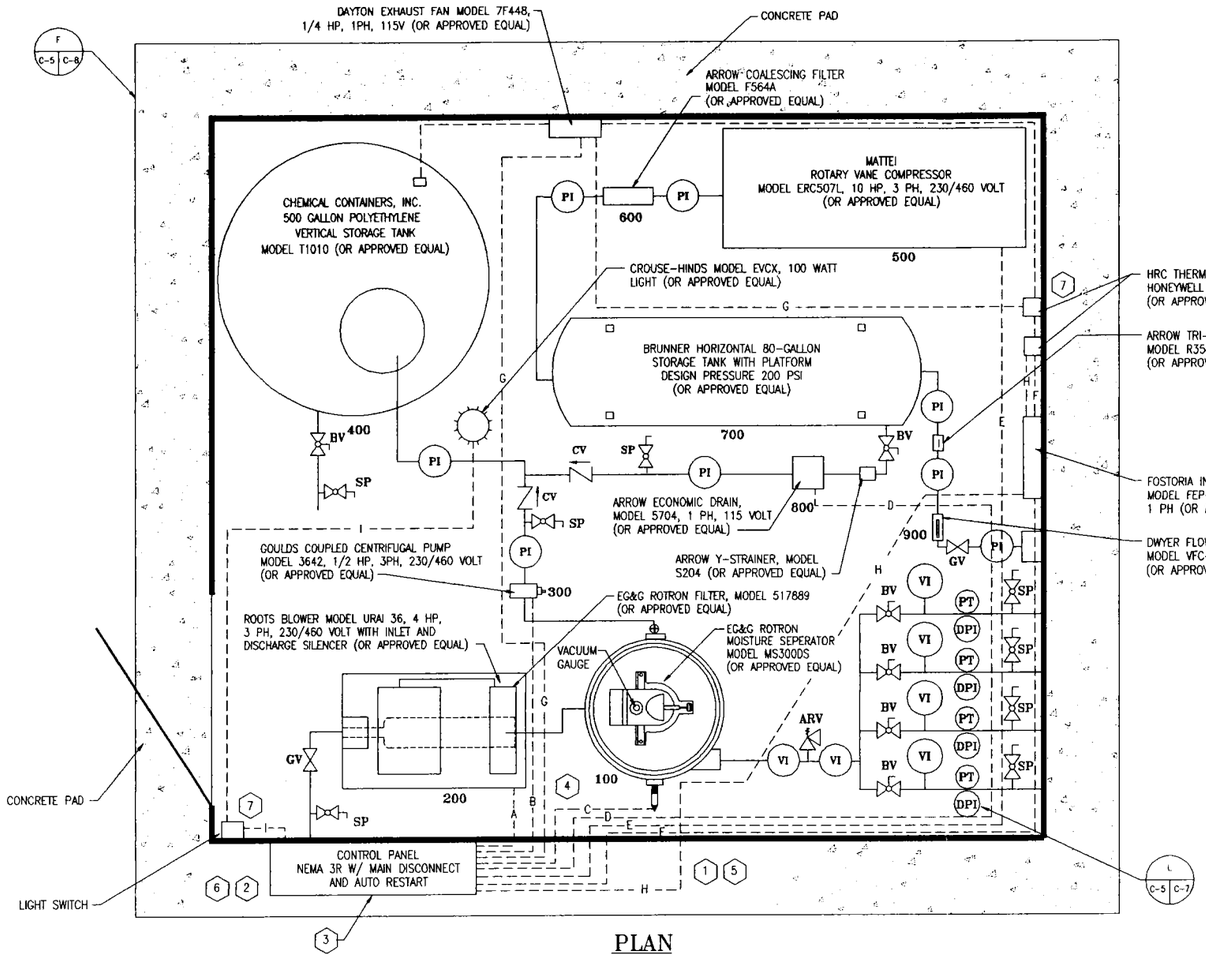

PLAN

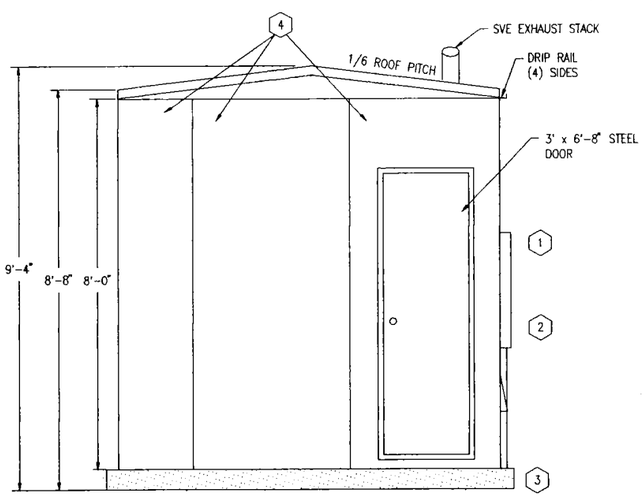

SIDE

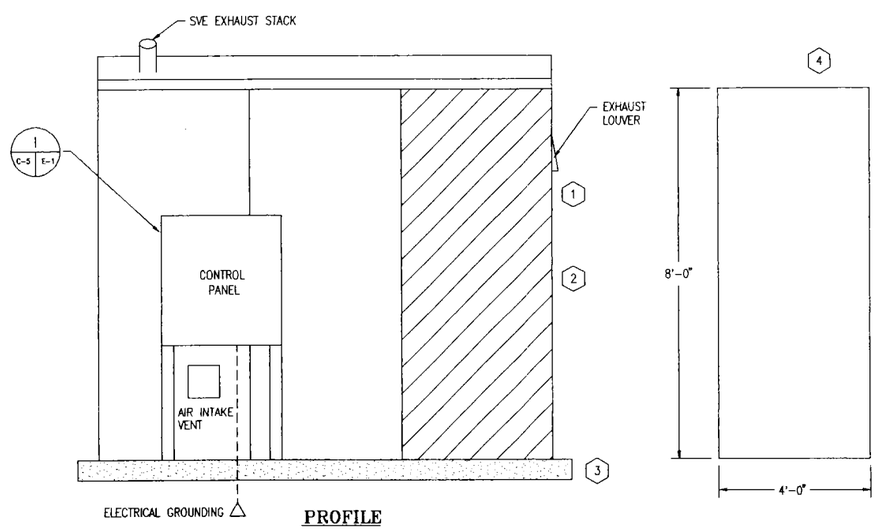

PROFILE

TREATMENT BUILDING PIPING AND ELECTRICAL PLAN AND TREATMENT BUILDING DETAIL

NOT TO SCALE

ELECTRICAL KEY

A. 1/2" RIGID METAL CONDUIT W/3 #14 THHN COPPER FOR VACUUM BLOWER 200

B. 1/2" RIGID METAL CONDUIT W/3 #14 THHN COPPER FOR MOISTURE SEPARATOR TRANSFER PUMP 300

C. 1" RIGID METAL CONDUIT W/2 #14 THHN COPPER FOR MOISTURE SEPARATOR 100 HIGH WATER SENSOR, AND W/3 #14 THHN MOISTURE SEPARATOR 100 LEVEL SENSORS

D. 1/2" RIGID METAL CONDUIT W/3 #14 THHN COPPER FOR DRAIN 800

E. 1/2" RIGID METAL CONDUIT W/3 #8 THHN COPPER FOR AIR COMPRESSOR 500

F. 1/2" RIGID METAL CONDUIT W/2 #14 THHN COPPER FOR VERTICAL STORAGE TANK 400 HIGH WATER SENSOR

G. 1/2" RIGID METAL CONDUIT W/3 #12 THHN COPPER FOR EXHAUST FAN AND THERMOSTAT

H. 1/2" RIGID METAL CONDUIT W/3 #14 THHN COPPER FOR HEATER AND THERMOSTAT

I. 1/2" RIGID METAL CONDUIT W/3 #14 THHN COPPER FOR LIGHT AND SWITCH

NOTES

1. ALL WIRE WILL BE AWG COPPER
2. CONTROL AND POWER PANEL WILL BE NEMA 3R.
3. BREAKERS WILL BE ENCLOSED IN PANEL
4. ALL WIRING, CONDUIT, SEAL-OFFS, SWITCHES, ETC. WILL BE INSTALLED IN ACCORDANCE WITH A CLASS I, DIVISION 2, GROUP D HAZARDOUS LOCATION
5. CONDUIT SIZE AND WIRE GAUGE ARE MINIMUM REQUIREMENTS. ALTERNATE CONDUIT MATERIAL MUST MEET CLASS I, DIVISION 2, GROUP D SPECIFICATIONS AND BE PRE-APPROVED BY CONTRACTOR
6. PROVIDE GFCI OUTLET INSIDE CONTROL PANEL
7. LIGHT SWITCH, HEATER THERMOSTAT, AND EXHAUST FAN THERMOSTAT WILL BE MOUNTED AND WIRED IN ACCORDANCE WITH CLASS I, DIVISION 2, GROUP D SPECIFICATIONS

NOTES

1. BUILDING TO BE 12' LONG, 10' WIDE AND HAVE 8' TALL WALLS. BUILDING TO BE INSULATED WITH 2" STYROFOAM INSULATION WITH A R-11 VALUE.
2. ENCLOSURE TO BE PAINTED WHITE.
3. MINIMUM CONCRETE PAD SIZE IS 13' LONG, 11.5' WIDE AND 10" THICK. 2 LAYERS OF 6" x 6" W4.0 X W4.0 WELDED WIRE FABRIC. CONCRETE MIX DESIGN WILL FOLLOW ACI 301.
4. INSULATED, REMOVABLE WALL PANELS ON A TRACK SYSTEM.

SYMBOL	DESCRIPTION	DATE	APPROVED BY
	REVISIONS		

J.A. JONES ENVIRONMENTAL SERVICES JACKSONVILLE, FLORIDA

A/E CONTRACT NO. N62470-93-D-3033

ACTIVITY - SATISFACTORY TO: DATE:

DRAFT

DEPARTMENT OF THE NAVY NAVAL FACILITIES ENGINEERING COMMAND
NAVAL STATION ATLANTIC DIVISION NORFOLK, VIRGINIA

RAC ACTION FOR STATEMENT OF WORK DESIGN
BUILDING LCH-4015
MARINE CORPS BASE
CAMP LEJEUNE, NORTH CAROLINA

TREATMENT BUILDING PIPING AND ELECTRICAL PLAN

CODE ID. NO. 80091 SIZE D
SCALE: N.T.S.
EFD NO.
STA. PROJ. NO.
SPEC. NO.
CONSTR. CONTR. NO. N62470-93-D-3033
NAVFAC DRAWING NO.
SHEET 5 OF 10
C-5

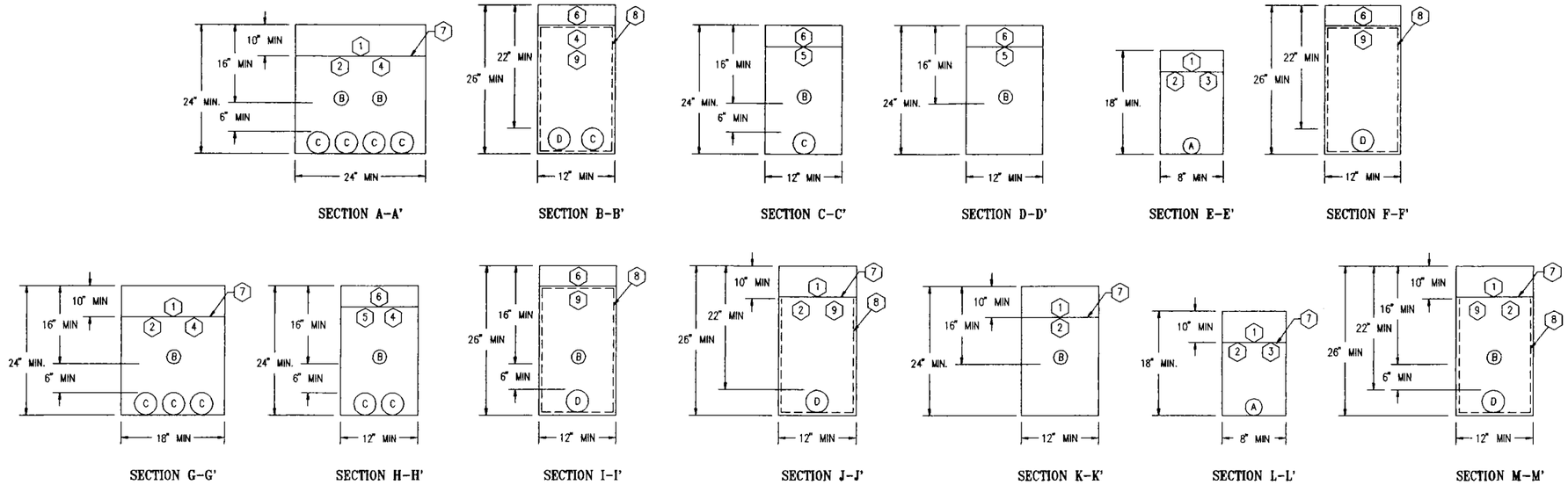

SECTION A-A' SECTION B-B' SECTION C-C' SECTION D-D' SECTION E-E' SECTION F-F'

SECTION G-G' SECTION H-H' SECTION I-I' SECTION J-J' SECTION K-K' SECTION L-L' SECTION M-M'

NOTES

1. MINIMUM 4" OF TOPSOIL, SEED WILL MATCH EXISTING VEGETATION.
2. SOIL FILL MATERIAL WILL BE COMPACTED TO 85% OF MODIFIED PROCTOR DRY DENSITY.
3. ELECTRICAL MARKER TAPE WILL BE PLACED 12 INCHES BELOW LAND SURFACE.
4. PIPES WILL BE SEPARATED BY A MINIMUM OF 1-1/2 TIMES PIPE DIAMETER.
5. SOIL FILL MATERIAL WILL BE COMPACTED TO 95% OF MODIFIED PROCTOR DRY DENSITY.
6. MINIMUM 2.5" OF PRIME COAT AND BITUMINOUS COAT, FOLLOWED BY A MINIMUM 8" STONE BASE COURSE AGGREGATE, ABC LIMEROCK, MEETING THE GRADATION REQUIREMENTS OF NORTH CAROLINA DOT. THE LIMEROCK WILL BE, COMPACTED TO 95% OF MODIFIED PROCTOR DRY DENSITY.
7. 10 MIL. POLYETHYLENE SHEET WILL BE PLACED AT THE INTERFACE BETWEEN COMPACTED FILL MATERIAL AND WASHED PEA GRAVEL.
8. GEOTEXTILE FABRIC WILL ENCOMPASS TRENCH SIDES AND FLOOR AND HAVE A 12" MINIMUM OVERLAP ON ALL SEAMS.
9. WASHED PEA GRAVEL - NC DOT AGGREGATE DESIGNATION 78M

PIPE LEGEND

A. 1.5" SCH. 80 PVC ELECTRICAL CONDUIT

B. 1" AIR-PRO™ HDPE COMPRESSED AIR PIPE

C. 2" SCH. 40 PVC VAPOR EXTRACTION HEADER

D. 2" CIRCUMSLOT™ PVC WELL SCREEN WITH 0.02" SLOT WIDTH (OR APPROVED EQUAL)

PIPE CROSS SECTION DETAILS

A / C-3 / C-6

NOT TO SCALE

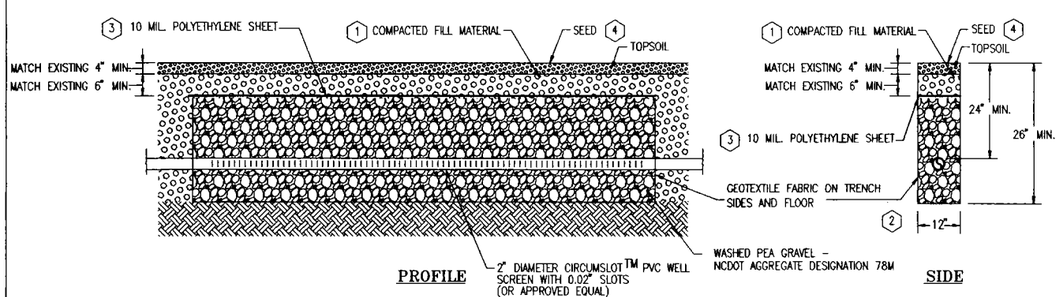

PROFILE SIDE

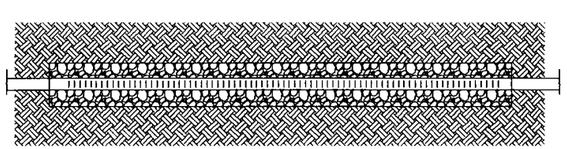

PLAN

NOTES:

1. SOIL FILL MATERIAL WILL BE COMPACTED TO 85% OF MODIFIED PROCTOR DRY DENSITY.
2. GEOTEXTILE FABRIC WILL ENCOMPASS TRENCH SIDES AND FLOOR AND HAVE A 12 INCH MINIMUM OVERLAP ON ALL SEAMS.
3. A MINIMUM OF 10 MIL. POLYETHYLENE SHEETING WILL BE PLACED AT THE INTERFACE BETWEEN THE COMPACTED FILL MATERIAL AND THE WASHED PEA GRAVEL. APPROXIMATELY 10 INCHES BLS.
4. SEED WILL MATCH EXISTING VEGETATION. PROVIDE SEED AT 5 POUNDS PER 1000 SQUARE FEET. PROVIDE FERTILIZER AT 25 POUNDS PER 1000 SQUARE FEET.

HORIZONTAL SOIL VAPOR EXTRACTION WELL VEGETATIVE SECTION

O / C-3 / C-6

NOT TO SCALE

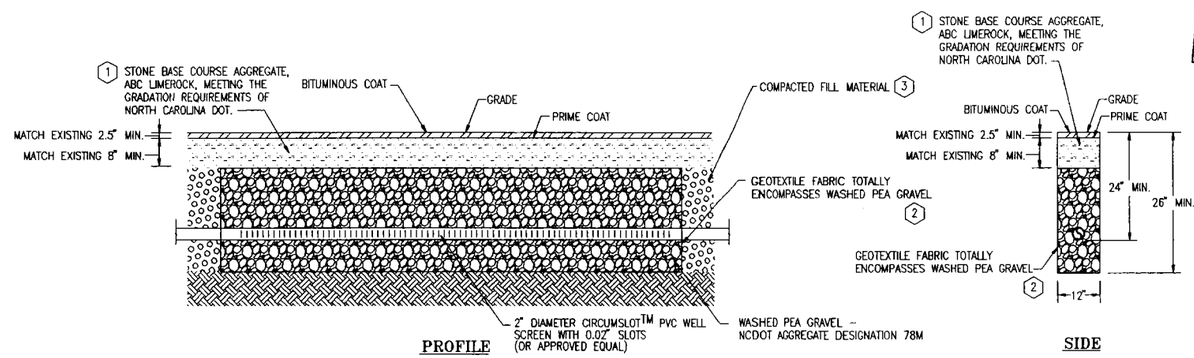

PROFILE SIDE

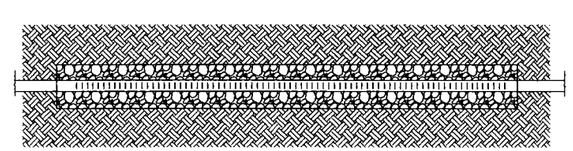

PLAN

NOTES:

1. LIMEROCK WILL BE COMPACTED TO 95% OF MODIFIED PROCTOR DRY DENSITY.
2. GEOTEXTILE FABRIC WILL COMPLETELY SURROUND WASHED PEA GRAVEL AND HAVE A 12" MINIMUM OVERLAP ON ALL SEAMS.
3. SOIL FILL MATERIAL WILL BE COMPACTED TO 95% OF MODIFIED PROCTOR DRY DENSITY.

HORIZONTAL SOIL VAPOR EXTRACTION WELL ASPHALT SECTION

C / C-3 / C-6

NOT TO SCALE

DRAFT

SYMBOL	DESCRIPTION	DATE	APPROVED BY
	REVISIONS		

J.A. JONES ENVIRONMENTAL SERVICES JACKSONVILLE, FLORIDA

A/E CONTRACT NO: N62470-93-D-3033

ACTIVITY - SATISFACTORY TO: DATE

TITLE AND SIGNATURE OF PERSON: DATE

SIZE SCHEMATIC DRAWN REVIEW CHIEF ARCH/ENGR PROJECT MANAGER FIRE PROTECTION QUALITY CONTROL BRANCH MANAGER TECHNICAL DIRECTOR

DEPARTMENT OF THE NAVY NAVAL FACILITIES ENGINEERING COMMAND

NAVAL STATION ATLANTIC DIVISION NORFOLK, VIRGINIA

RAC ACTION FOR STATEMENT OF WORK DESIGN
BUILDING LCH-4015
MARINE CORPS BASE
CAMP LEJEUNE, NORTH CAROLINA

SOIL VAPOR EXTRACTION WELL DETAILS AND PIPE TRENCH DETAILS

CODE ID. NO. 80091	SIZE D
SCALE:	N.T.S.
EFD NO.	
STA. PROJ. NO.	
SPEC. NO.	
CONSTR. CONTR. NO.	N62470-93-D-3033
NAVFAC DRAWING NO.	
SHEET 6 OF 10	

C-6

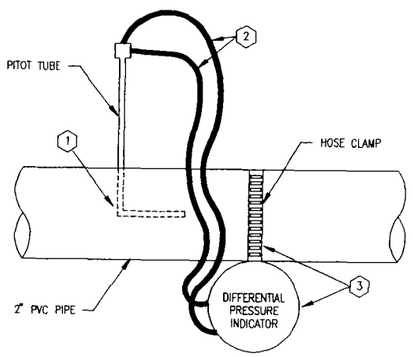

NOTES

1. PITOT TUBE SHALL BE PLACED IN THE CENTER OF THE 2" PVC PIPE.
2. TYGON TUBING
3. DIFFERENTIAL PRESSURE INDICATOR SHALL BE PLACED ON 2" PVC PIPE USING TWO HOSE CLAMPS. ONE HOSE CLAMP PLACED ON PVC PIPE, THE SECOND HOSE CLAMP PLACED AROUND THE DIFFERENTIAL PRESSURE INDICATOR.

PITOT TUBE WITH DIFFERENTIAL PRESSURE INDICATOR DETAIL

L C-5 C-7

NOT TO SCALE

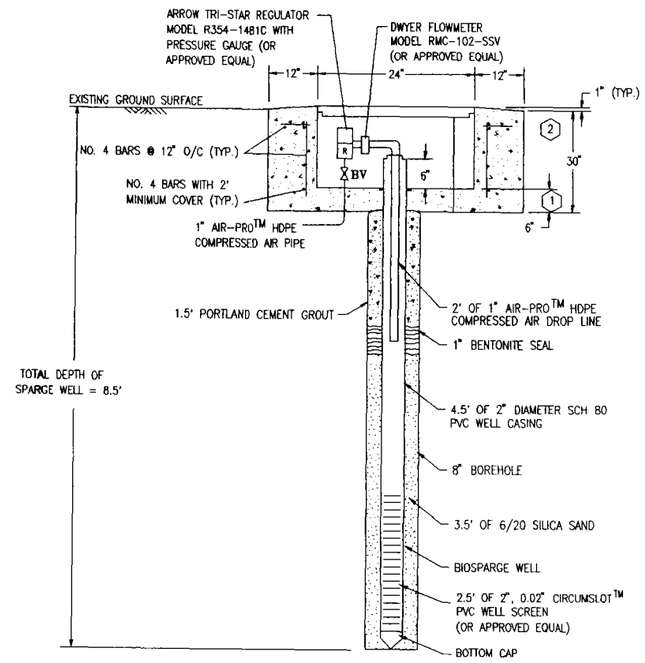

SECTION

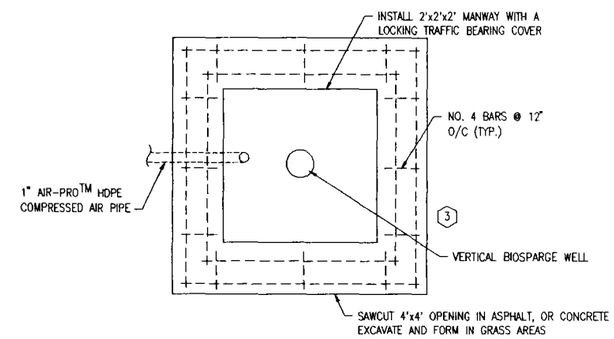

PLAN VIEW

NOTES:

1. MANWAY PLACED ON 6" BED OF CONCRETE.
2. ALL CONCRETE SHALL BE 4000 PSI MINIMUM WITH 4-6% AIR ENTRAINMENT AND 4" MAXIMUM SLUMP.
3. MANWAY WILL BE CAPABLE OF SUPPORTING AN AASHTO H-20 LIVE LOAD.

BIOSPARGE WELL DETAIL

B C-3 C-7

NOT TO SCALE

DRAFT

SYMBOL	DESCRIPTION	DATE	APPROVED BY
	REVISIONS		

J.A. JONES ENVIRONMENTAL SERVICES JACKSONVILLE, FLORIDA

L.A.E. CONTRACT NO. N62470-93-D-3033

ACTIVITY - SATISFACTORY TO: DATE

THE US GOV DOMAINE PARTS: DATE

DEPARTMENT OF THE NAVY
NAVAL FACILITIES ENGINEERING COMMAND
NAVAL STATION ATLANTIC DIVISION NORFOLK, VIRGINIA

RAC ACTION FOR STATEMENT OF WORK DESIGN
BUILDING LCH-4015
MARINE CORPS BASE
CAMP LEJEUNE, NORTH CAROLINA
BIOSPARGE WELL DETAIL AND PITOT TUBE
WITH DIFFERENTIAL PRESSURE INDICATOR DETAIL

CODE ID. NO. 80091 SIZE D
SCALE: N.T.S.
EFD NO.
STA. PROJ. NO.
SPEC. NO.
CONSTR. CONTR. NO. N62470-93-D-3033
NAVFAC DRAWING NO.
SHEET 7 OF 10
C-7

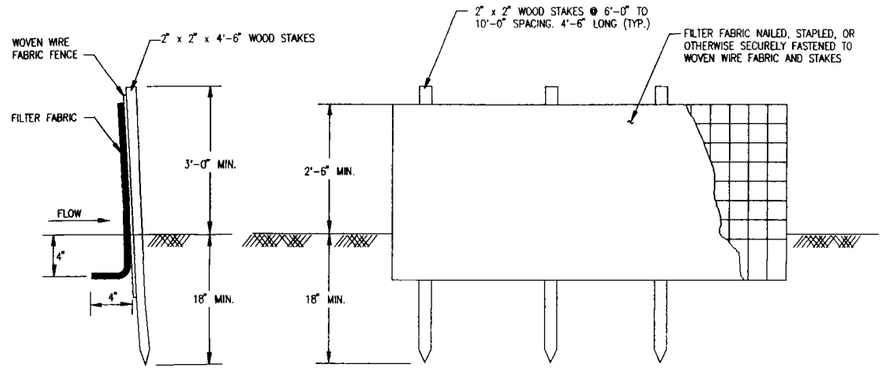

D C-3 C-8 STAKED SILT FENCE DETAIL
NOT TO SCALE

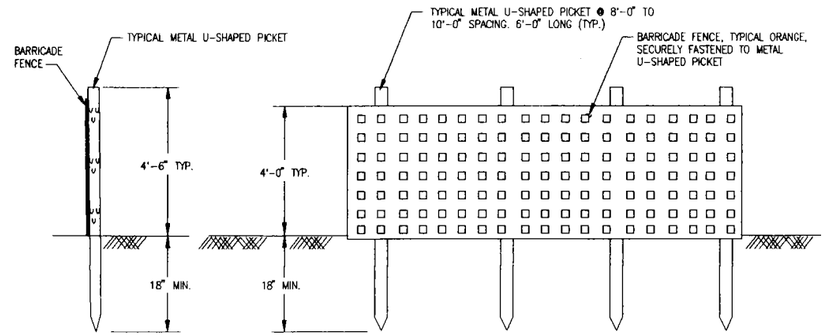

E C-3 C-8 BARRICADE FENCE DETAIL
NOT TO SCALE

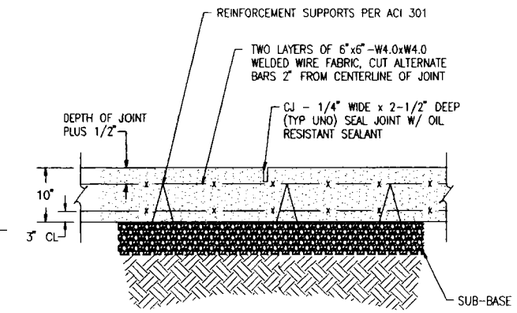

NOTE:
SUB-BASE SHALL CONFORM TO ASTM D1241-68 (1989), TYPE 1, GRADATION B AND SHALL BE COMPACTED TO 95% OF MODIFIED PROCTOR PER ASTM D1557-91. THICKNESS SHALL BE A MINIMUM OF 8".

F C-5 C-8 CONCRETE REPLACEMENT DETAIL
NOT TO SCALE

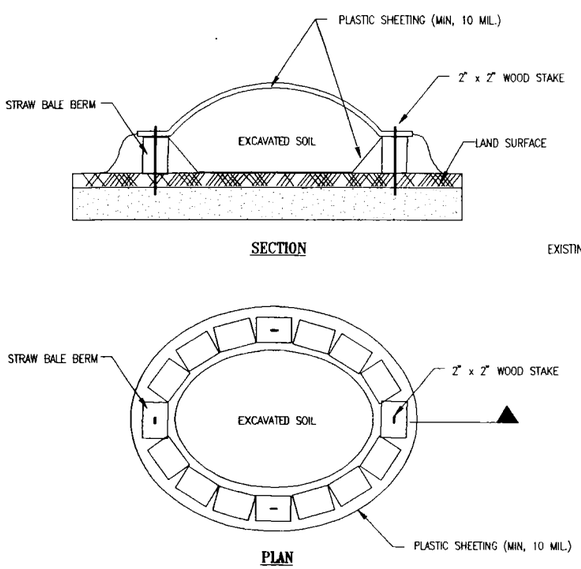

G C-3 C-8 TEMPORARY CONTAINMENT OF EXCAVATED SOIL DETAIL
NOT TO SCALE

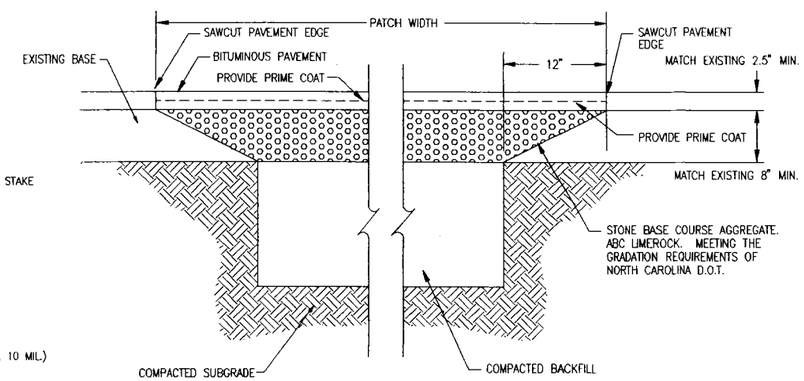

J C-3 C-8 PAVEMENT REPAIR DETAIL
NOT TO SCALE

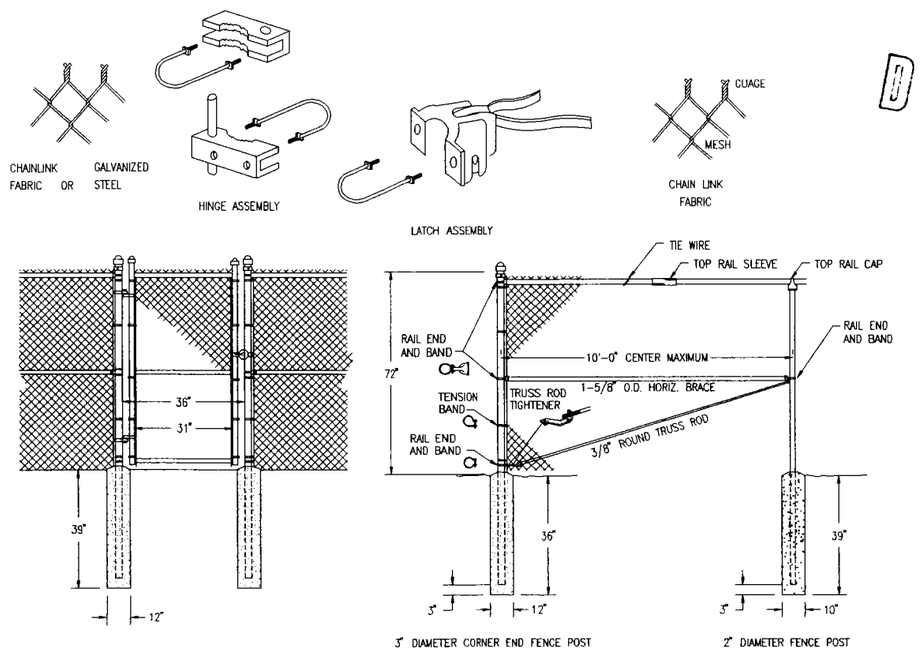

M C-3 C-8 SINGLE SWING GATE DETAIL
NOT TO SCALE

N C-3 C-8 CHAIN-LINK FENCE DETAIL
NOT TO SCALE

SYMBOL	DESCRIPTION	DATE	APPROVED BY
	REVISIONS		

DRAFT

J.A. JONES ENVIRONMENTAL SERVICES JACKSONVILLE, FLORIDA
A/E CONTRACT NO. N62470-93-D-3033
ACTIVITY - SATISFACTORY TO: DATE:
FOR USE FOR COMMENT ONLY DATE:

DEPARTMENT OF THE NAVY NAVAL FACILITIES ENGINEERING COMMAND
NAVAL STATION ATLANTIC DIVISION NORFOLK, VIRGINIA
RAC ACTION FOR STATEMENT OF WORK DESIGN
BUILDING LCH-4015
MARINE CORPS BASE
CAMP LEJEUNE, NORTH CAROLINA
MISCELLANEOUS DETAILS

CODE ID. NO. 80091 SIZE D
SCALE: N.T.S.
EFD NO.
STA. PROJ. NO.
SPEC. NO.
CONSTR. CONTR. NO. N62470-93-D-3033
NAVFAC DRAWING NO.
SHEET 8 OF 10
C-8

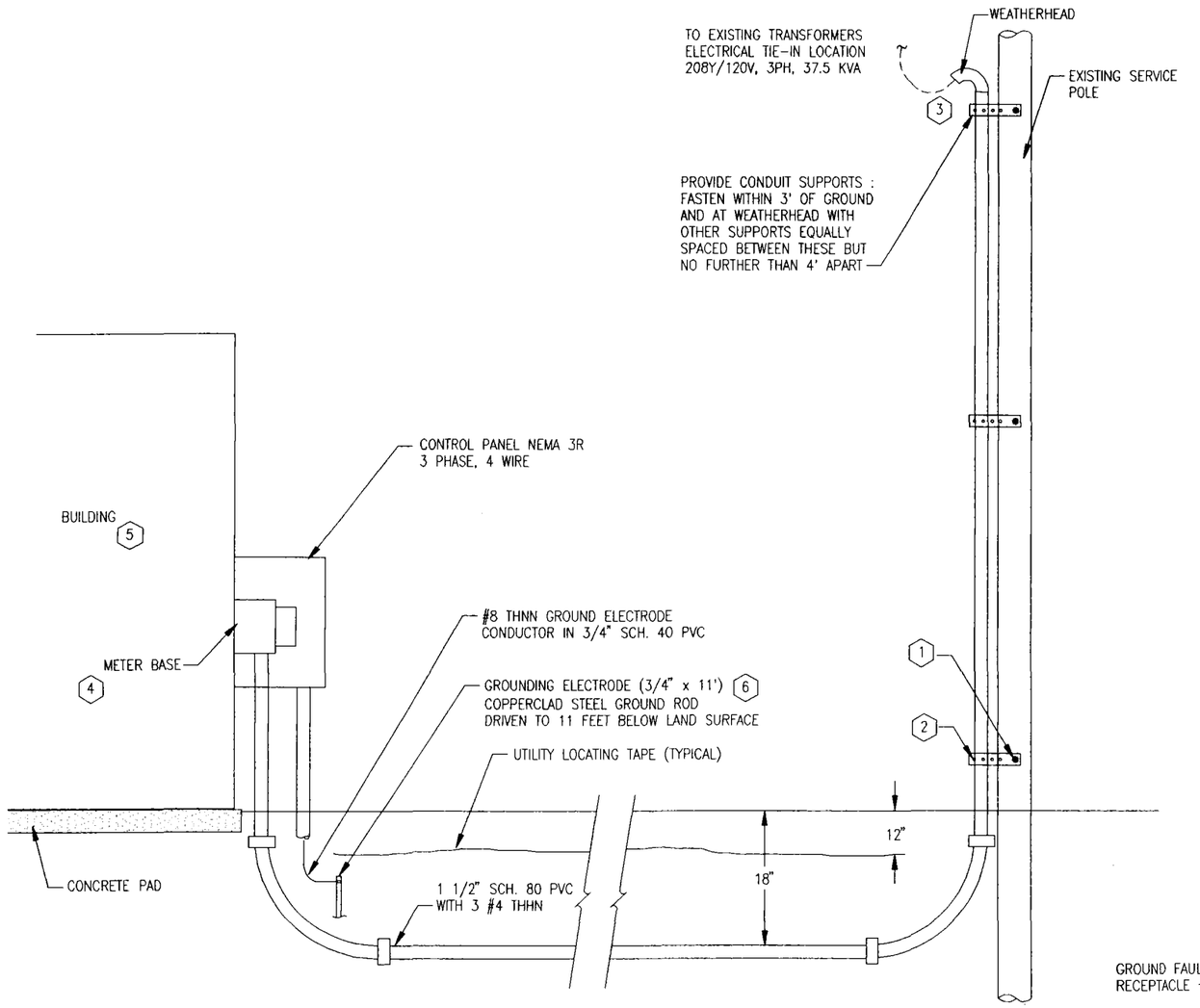

H C-3 E-1 POWER SUPPLY CONNECTION
NOT TO SCALE

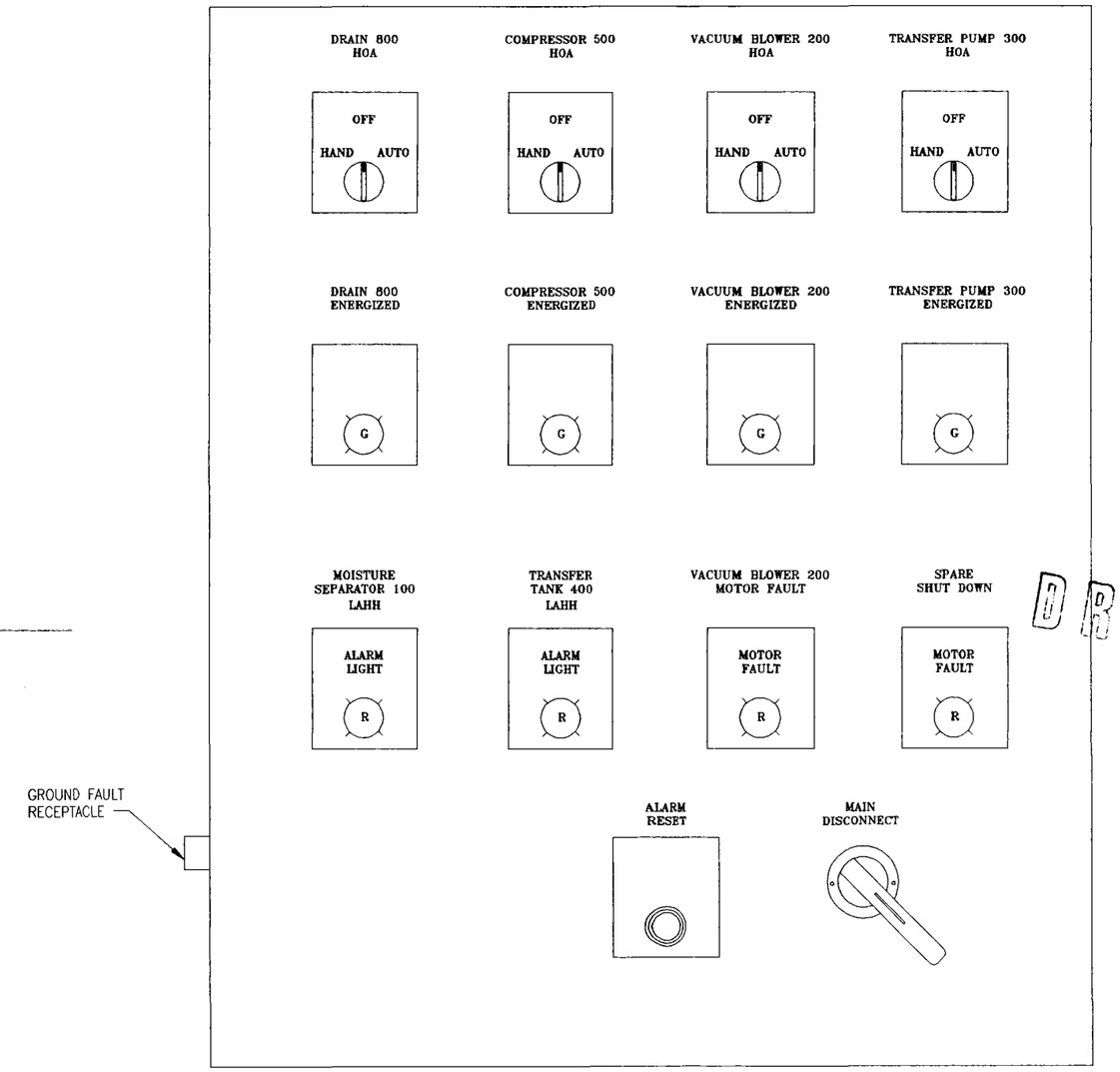

I C-5 E-1 CONTROL PANEL INNER DOOR
NOT TO SCALE

NOTES:

1. LAG SCREW, 1/2" x 4"
2. PERFORATED STRAPPING, 1-1/2" WIDE
3. TRENCH TO EXISTING SERVICE POLE AND PROVIDE CONDUIT AND SECONDARY CONDUCTORS. ELECTRICIANS WILL PLACE AND PROVIDE SERVICE CONNECTIONS TO SECONDARY TRANSFORMER. COORDINATE SERVICE CONNECTION WITH BASE UTILITIES.
4. METER PROVIDED BY BASE UTILITIES. COORDINATE METER BASE WITH BASE UTILITIES.
5. SOIL AND GROUNDWATER TREATMENT EQUIPMENT ENCLOSURE SHALL BE A SELF CONTAINED UNIT COMPLETE WITH EXTERIOR PANELBOARD AND CONTROLS. INTERIOR OF SOIL AND GROUNDWATER TREATMENT ENCLOSURE IS A CLASS 1 DIVISION II, GROUP D LOCATION.
6. USE ADDITIONAL GROUND RODS, WHEN REQUIRED, TO OBTAIN RESISTANCE VALUE, AS SPECIFIED. GROUNDING REQUIREMENTS SHALL BE IN ACCORDANCE WITH NEC GUIDELINES.

NOTE:

60 AMP CONTROL PANEL WILL BE UL LISTED AND LISTED FOR USE AS SERVICE ENTRANCE.

SYMBOL	DESCRIPTION	DATE	APPROVED BY
	REVISIONS		

DRAFT

J.A. JONES ENVIRONMENTAL SERVICES JACKSONVILLE FLORIDA
A/E CONTRACT NO. N62470-93-D-3033
ACTIVITY - SATISFACTORY TO:

DEPARTMENT OF THE NAVY NAVAL FACILITIES ENGINEERING COMMAND
NAVAL STATION ATLANTIC DIVISION NORFOLK, VIRGINIA
RAC ACTION FOR STATEMENT OF WORK DESIGN
BUILDING LCH-4015
MARINE CORPS BASE
CAMP LEJEUNE, NORTH CAROLINA
POWER SUPPLY CONNECTION AND CONTROL PANEL INNER DOOR DETAILS

CODE ID. NO. 80091 SIZE D
SCALE: N.T.S.
EFD NO.
STA. PROJ. NO.
SPEC. NO.
CONSTR. CONTR. NO. N62470-93-D-3033
NAVFAC DRAWING NO.
SHEET 9 OF 10
E-1

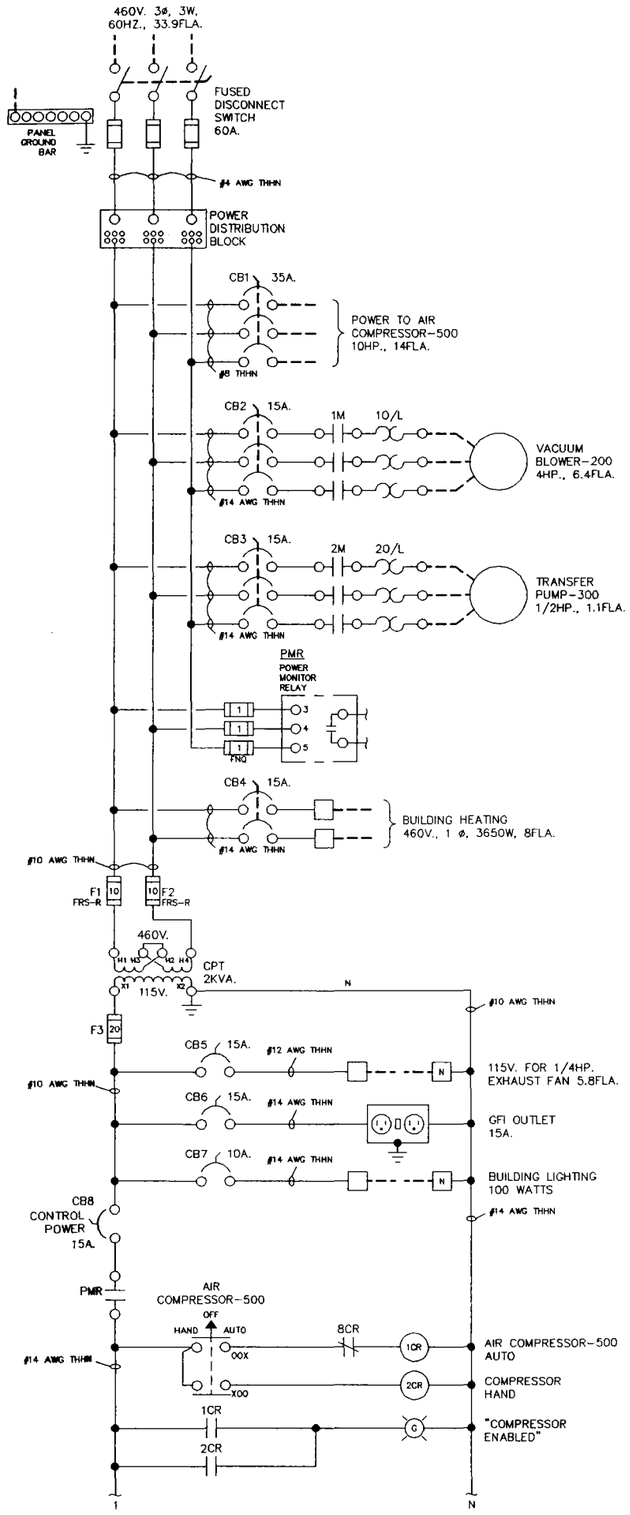

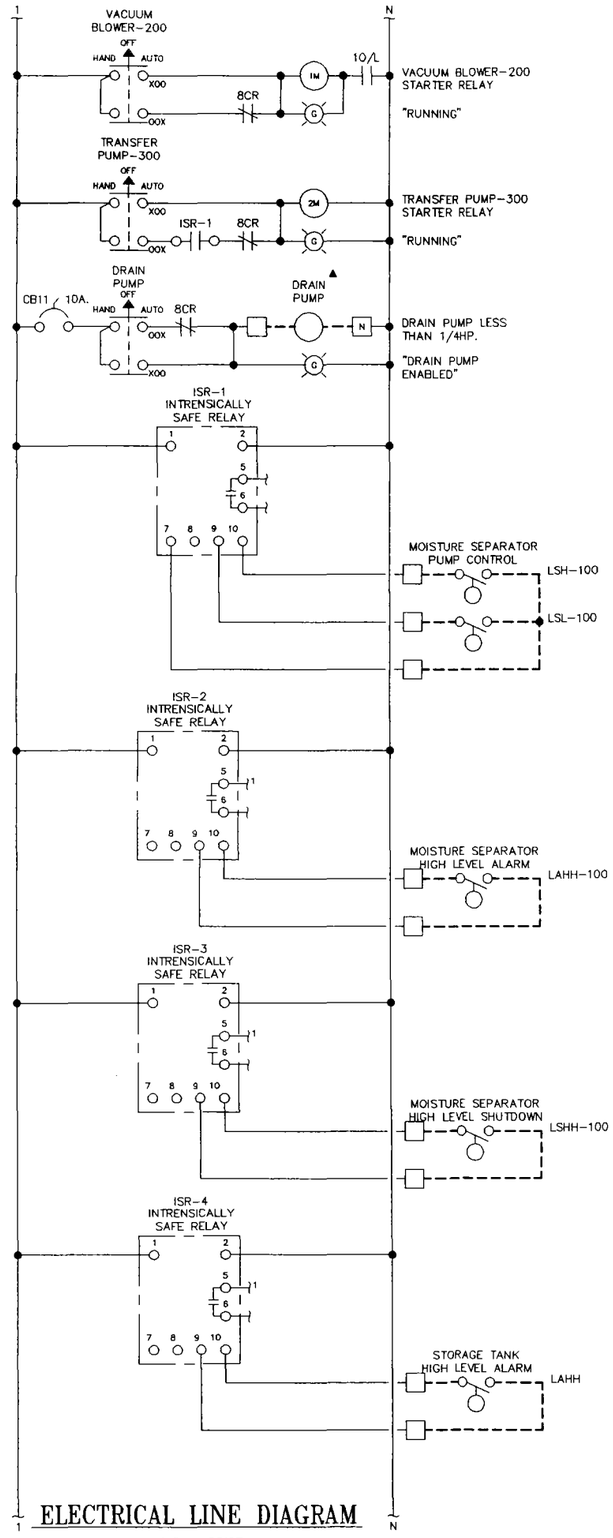

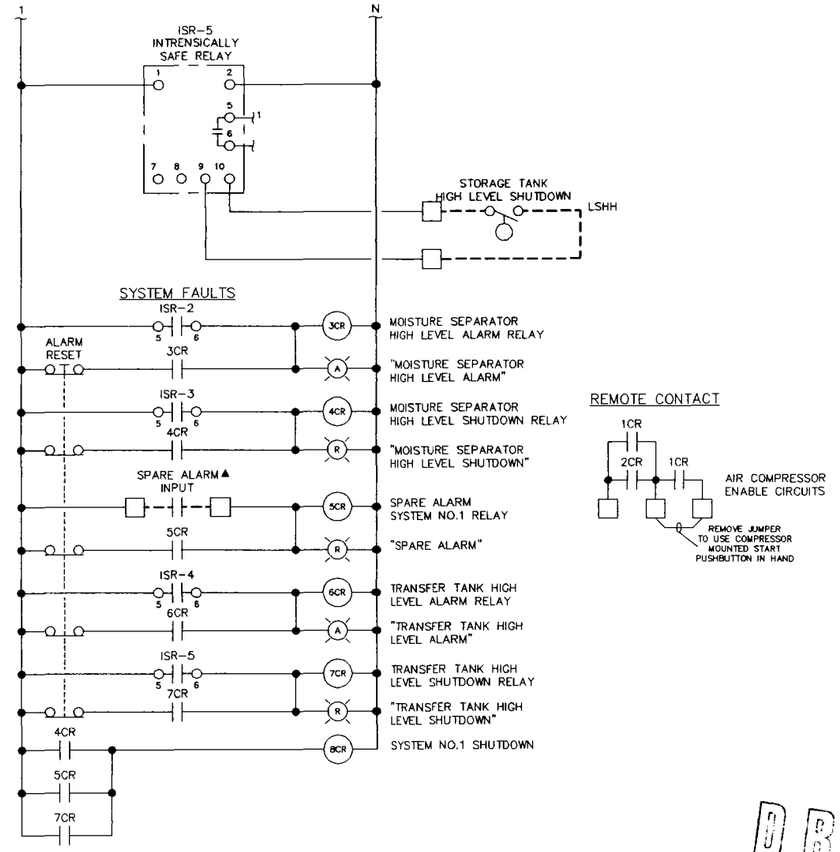

ELECTRICAL LINE DIAGRAM

NOT TO SCALE

CONTROL LOGIC

1. LOW LEVEL IN MOISTURE SEPARATOR 100
   STOP TRANSFER PUMP 300
2. HIGH LEVEL IN MOISTURE SEPARATOR 100
   START TRANSFER PUMP 300
3. HIGH-HIGH LEVEL IN MOISTURE SEPARATOR 100
   STOP VACUUM BLOWER 200, STOP COMPRESSOR 500
   MANUAL START
4. HIGH-HIGH LEVEL IN STORAGE TANK 400
   STOP VACUUM BLOWER 200, STOP COMPRESSOR 500
   MANUAL START

DRAFT

SYMBOL	DESCRIPTION	DATE	APPROVED BY
	REVISIONS		

J.A. JONES ENVIRONMENTAL SERVICES JACKSONVILLE, FLORIDA
A/E CONTRACT NO. N62470-93-D-3033

DEPARTMENT OF THE NAVY
NAVAL FACILITIES ENGINEERING COMMAND
NAVAL STATION ATLANTIC DIVISION NORFOLK, VIRGINIA

RAC ACTION FOR STATEMENT OF WORK DESIGN
BUILDING LCH-4015
MARINE CORPS BASE
CAMP LEJEUNE, NORTH CAROLINA

ELECTRICAL LINE DIAGRAM AND CONTROL LOGIC

CODE ID. NO. 80091 | SIZE D
SCALE: N.T.S.
EFD NO.
STA. PROJ. NO.
SPEC. NO.
CONSTR. CONTR. NO. N62470-93-D-3033
NAVFAC DRAWING NO.
SHEET 10 OF 10
E-2

APPENDIX A

CONSTRUCTION SCHEDULE

POLRAC - Contract #N62470-93-D-3033 | **D.O. #0037 - Bldg. 1854, Marine Corps Base, Camp LeJeune, NC** | **06/30/97 Update**

ID	WBS	Task Name	Dur.	Start	Finish
1	------	Building LCH-4015 (37a)	444d	10/4/96	6/17/98
2	------	General	253d	10/4/96	9/23/97
3	33.01	Mobilization and Preparatory Work	253d	10/4/96	9/23/97
4	------	Award of Contract	1d	10/4/96	10/4/96
5	------	Procurement	20d	8/20/97	9/16/97
6	33.01.02	Site Mobilization	5d	9/17/97	9/23/97
7	33.01.03	Preconstruction Submittals/Implementation Plans	62d	5/27/97	8/20/97
8	33.01.03.13	Prepare Initial General Site Work Plan	26d	5/27/97	7/1/97
9	33.01.03.13	Gov't. Review of General Site Work Plan	25d	7/2/97	8/5/97
10	33.01.03.13	Finalize General Site Work Plan	10d	8/6/97	8/19/97
11	33.01.03.13	Gov't. Approval of General Site Work Plan	1d	8/19/97	8/19/97
12	33.01.03.13	Pre-Construction Conference	1d	8/20/97	8/20/97
13	33.01.04	Setup/Construct Temporary Facilities	5d	9/17/97	9/23/97
14	33.01.04.91.0	Locate U/G Utilities	5d	9/17/97	9/23/97
15	33.02	Monitoring, Sampling, Test & Analyze	5d	9/17/97	9/23/97
16	33.02.11	Geotechnical Testing	5d	9/17/97	9/23/97
17	33.02.11.06	Surveying	5d	9/17/97	9/23/97
18	------	Trenching for Groundwater Piping/SVE	41d	9/17/97	11/12/97
19	33.02	Monitoring, Sampling, Test & Analyze	5d	10/29/97	11/4/97
20	33.02.09	Laboratory Chemical Analysis	5d	10/29/97	11/4/97
21	33.02.09.92.0	Soil Characterization for Disposal	5d	10/29/97	11/4/97
22	33.02.09.94.0	Confirmatory Soil Samples	5d	10/29/97	11/4/97
23	33.03	Site Work	36d	9/17/97	11/5/97
24	33.03.01	Demolition (Asphalt and Concrete for Trenching)	10d	9/17/97	9/30/97
25	33.03.03	Earthwork	21d	10/8/97	11/5/97
26	33.03.03.02.0	Excavation/Fill (Trenching Areas)	20d	10/8/97	11/4/97
27	33.03.03.02.9	Clean Sand Material for Bedding	10d	10/22/97	11/4/97
28	33.03.03.02.9	Common Fill Material - Soil	10d	10/23/97	11/5/97
29	33.05	Surface Water Collection and Control	5d	9/17/97	9/23/97
30	33.05.07	Sediment Barriers	5d	9/17/97	9/23/97
31	33.05.07.01	Silt Fence	5d	9/17/97	9/23/97

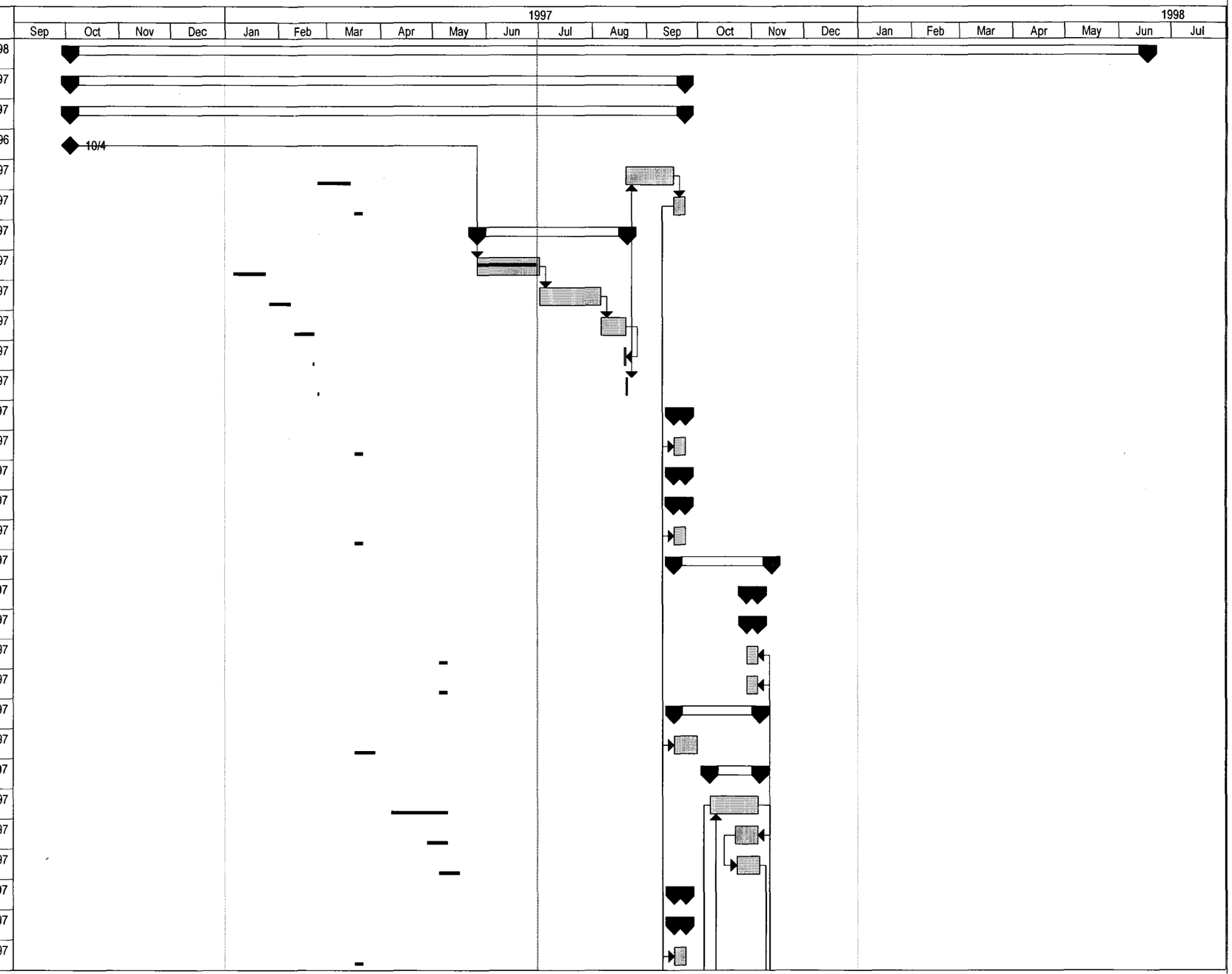

Project: D.O. #0037
Date: 6/30/97

Task | Critical | Target | Progress | Milestone | Summary | Rolled Up Task | Rolled Up Milestone | Rolled Up Progress

POLRAC - Contract #N62470-93-D-3033 | **D.O. #0037 - Bldg. 1854, Marine Corps Base, Camp LeJeune, NC** | **06/30/97 Update**

ID	WBS	Task Name	Dur.	Start	Finish
32	33.06	Groundwater Collection & Control	10d	10/22/97	11/4/97
33	33.06.02	Subsurface Drainage/Collection	10d	10/22/97	11/4/97
34	33.06.02.04.9	Compressed Air Piping/Metallic Detect Warning Tap	10d	10/22/97	11/4/97
35	33.07	Air Pollution/Gas Collection & Control	5d	10/29/97	11/4/97
36	33.07.01	Gas/Vapor Collection Trench System	5d	10/29/97	11/4/97
37	33.07.01.09	Gas Collect Header/Fittings (SVE pipe)/Metallic Tap	5d	10/29/97	11/4/97
38	33.20	Site Restoration	5d	11/6/97	11/12/97
39	33.20.04	Revegetation and Planting/Repairs to Traversed Roads	5d	11/6/97	11/12/97
40	-------	Remediation System	196d	9/17/97	6/17/98
41	33.02	Monitoring, Sampling, Test & Analyze	150d	11/6/97	6/3/98
42	33.02.04	Monitoring Wells	5d	11/6/97	11/12/97
43	33.02.04.18	VES Pilot Tests	5d	11/6/97	11/12/97
44	33.02.05	Sampling Surf. Water/Ground Water/Liquid Waste	65d	3/5/98	6/3/98
45	33.02.05.02	Groundwater Analy/Sampl for MW's (1st sample)	5d	3/5/98	3/11/98
46	33.02.05.02	Groundwater Analy/Sampl for MW's (2nd sample)	5d	5/28/98	6/3/98
47	33.02.09	Laboratory Chemical Analysis	105d	1/8/98	6/3/98
48	33.02.09.99.0	SVE Analy/Sampl for Vapor Effluent (1st sample)	5d	1/8/98	1/14/98
49	33.02.09.99.0	SVE Analy/Sampl for Vapor Effluent (2nd sample)	5d	2/5/98	2/11/98
50	33.02.09.99.0	SVE Analy/Sampl for Vapor Effluent (3rd sample)	5d	3/5/98	3/11/98
51	33.02.09.99.0	SVE Analy/Sampl for Vapor Effluent (4th sample)	5d	4/2/98	4/8/98
52	33.02.09.99.0	SVE Analy/Sampl for Vapor Effluent (5th sample)	5d	4/30/98	5/6/98
53	33.02.09.99.0	SVE Analy/Sampl for Vapor Effluent (6th sample)	5d	5/28/98	6/3/98
54	33.02.11	Geotechnical Testing	5d	11/13/97	11/19/97
55	33.02.11.91.0	Field Compaction Testing	5d	11/13/97	11/19/97
56	33.02.11.91.0	Concrete Slump Tests & Cylinders	5d	11/13/97	11/19/97
57	33.03	Site Work	61d	9/17/97	12/10/97
58	33.03.02	Clearing & Grubbing	5d	9/17/97	9/23/97
59	33.03.06	Electrical Panel and System Structure Wiring	10d	11/27/97	12/10/97
60	33.06	Groundwater Collection and Control	56d	9/24/97	12/10/97
61	33.06.01	Extraction and Injection Wells	56d	9/24/97	12/10/97
62	33.06.01.02	Air Sparge Well Drilling	10d	9/24/97	10/7/97
63	33.06.01.02.9	Compressor for Sparging Wells (Installation)	10d	11/27/97	12/10/97
64	33.06.01.02.9	Manways for Air Sparging and SVE Wells	15d	11/6/97	11/26/97

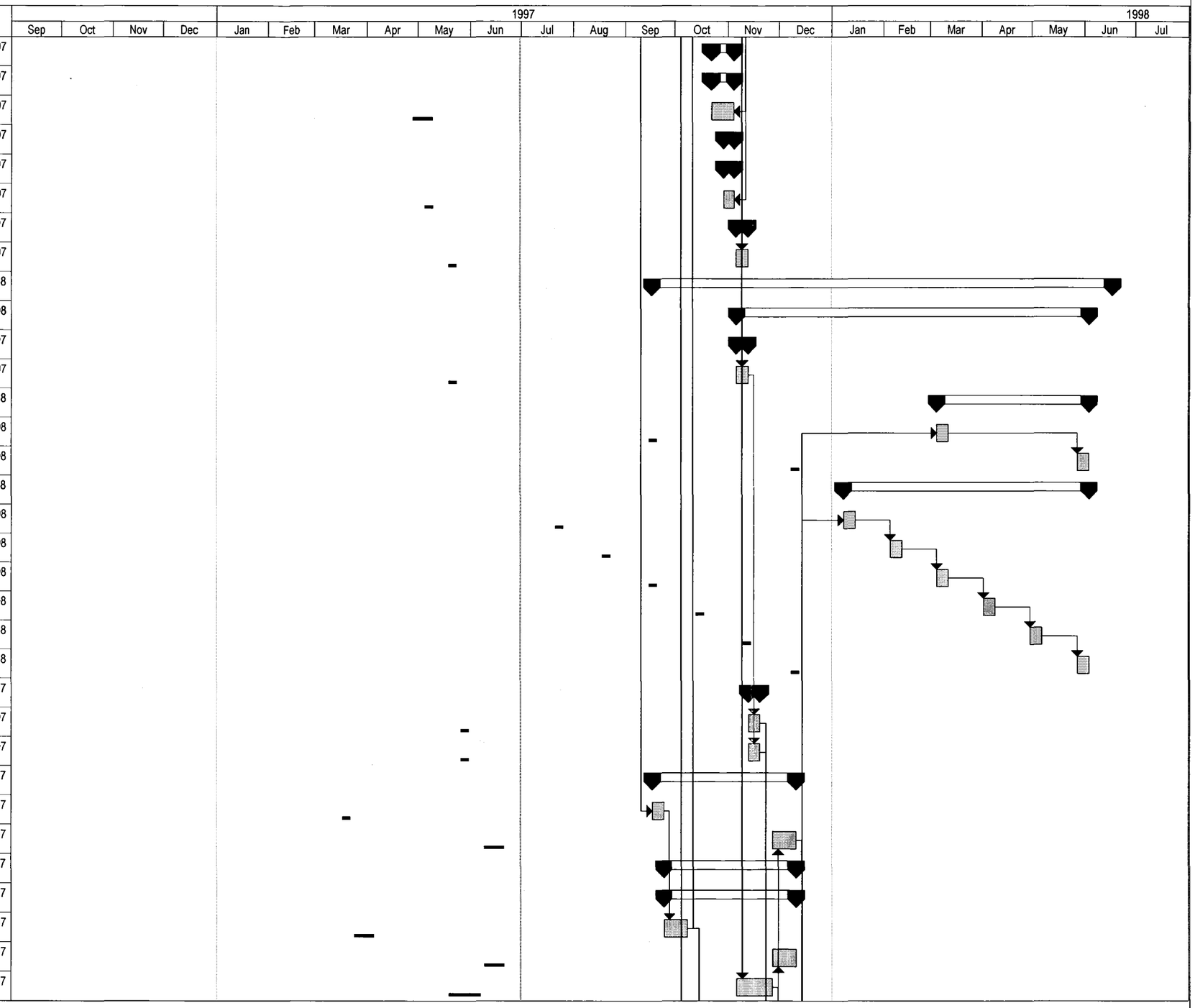

Project: D.O. #0037
Date: 6/30/97

Task | Critical | Target | Progress | Milestone | Summary | Rolled Up Task | Rolled Up Milestone | Rolled Up Progress

POLRAC - Contract #N62470-93-D-3033 | **D.O. #0037 - Bldg. 1854, Marine Corps Base, Camp LeJeune, NC** | **06/30/97 Update**

ID	WBS	Task Name	Dur.	Start	Finish
65	33.07	Air Pollution/Gas Collection & Control	26d	11/5/97	12/10/97
66	33.07.01	Gas/Vapor Collection Trench System	10d	11/27/97	12/10/97
67	33.07.01.10	Vacuum Blower/Compressor (Installation)	10d	11/27/97	12/10/97
68	33.07.02	Gas/Vapor Collection Well System	10d	11/5/97	11/18/97
69	33.07.02.01.0	Horizontal SVE Well Drilling	10d	11/5/97	11/18/97
70	33.13	Physical Treatment (Installation of System)	150d	11/20/97	6/17/98
71	33.13.23	Vapor Extraction (Includes Air Sparging)	150d	11/20/97	6/17/98
72	33.13.23.02.0	Permanent Unit (O&M)	130d	12/18/97	6/17/98
73	33.13.23.02.0	Pad for Treatment System	5d	11/20/97	11/26/97
74	33.13.23.02.0	Construction of Plant (Treat Bldg & Manway Plumb)	15d	11/20/97	12/10/97
75	33.13.23.02.0	System Startup	5d	12/11/97	12/17/97
76	33.19	Disposal (Commercial Facility)	176d	10/15/97	6/17/98
77	33.19.90	Loading, Transp, Disposal of Wastes	176d	10/15/97	6/17/98
78	33.19.90.90.9	Transport & Dispose - Solids (to Bio-Cell)	5d	10/15/97	10/21/97
79	33.19.90.90.9	Transp & Disp - Liquids to Base Plant (Well Devel)	5d	10/15/97	10/21/97
80	33.19.90.90.9	Transp & Disp - Liquids (SVE Moist Separat - O&M)	130d	12/18/97	6/17/98
81	33.21	Demobilization	5d	12/11/97	12/17/97
82	33.21.90	Site Cleanup	5d	12/11/97	12/17/97

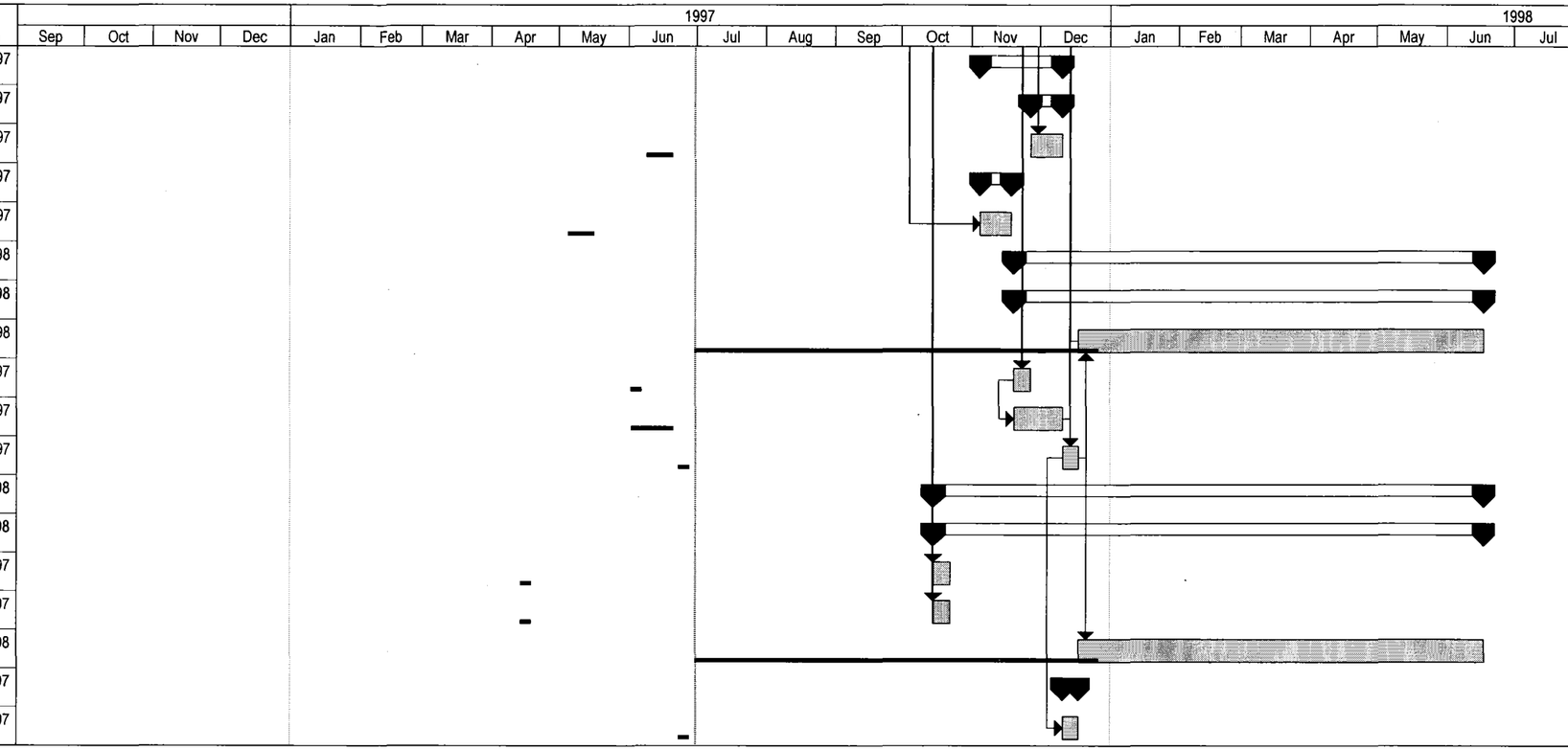

Project: D.O. #0037
Date: 6/30/97

Task | Target | Milestone | Rolled Up Task | Rolled Up Progress
Critical | Progress | Summary | Rolled Up Milestone

APPENDIX B

TECHNICAL SPECIFICATIONS

SECTION 02220

GENERAL EXCAVATION, FILLING, AND BACKFILLING
6/97

PART 1 GENERAL

1.1 REFERENCES

The publications listed below form a part of this specification to the extent referenced. The publications are referred to in the text by the basic designation only.

AMERICAN SOCIETY FOR TESTING AND MATERIALS (ASTM)

ASTM D 698	1991 Laboratory Compaction Characteristics of Soil Using Standard Effort (12,400 ft-lbf/ft (600 kN-m/m)
ASTM D 2487	1992 Classification of Soils for Engineering Purposes

1.2 DEFINITIONS

For the purposes of this specification, the term petroleum-impacted soil will be used to indicate soil exhibiting a concentration of total petroleum hydrocarbons (TPH) equal to or greater than 40 mg/kg using USEPA Method 5030 or 160 mg/kg using USEPA Method 3550.

PART 2 PRODUCTS

2.1 SOIL MATERIALS

Provide soil material free of debris, roots, wood, scrap material, vegetation, refuse, soft unsound particles, and deleterious or objectionable materials.

PART 3 EXECUTION

3.1 PROTECTION - UNDERGROUND UTILITIES

Location of the existing utilities indicated in the CAP is approximate. The Contractor shall physically verify the location and elevation of the existing utilities indicated prior to excavation activities.

3.2 PIPE TRENCH EXCAVATION

3.2.1 General

Excavate pipe trenches to interpolated depths based on the information presented in the contractor generated construction drawings. Backfill with fill material indicated in PART 2 above. Paved areas or areas designated for vehicular traffic, compact to 95 percent of ASTM D 698 maximum density.

3.2.2 Materials and Equipment

3.2.2.1 General

a. Provide all labor, materials, and equipment necessary to accomplish the work specified in these paragraphs.

b. The Contractor shall notify the NTR at least 48 hours prior to the start of pipe trenching activities. The Contractor shall stage operations to minimize the time that any petroleum-impacted soil is exposed to the weather.

3.2.2.2 Unclassified Excavation

Excavation is unclassified. All excavation shall be completed regardless of the type, nature, or condition of the material encountered.

3.2.3 Limits of Excavation

a. Excavate to interpolated depths based on the information provided in the contractor generated construction drawings.
b. If weather warrants, construct small berms around the perimeter of the excavation areas to prevent surface water from entering the open excavation. Remove and contain any ponded waters within the excavations.
c. Transfer all excavated soil to the designated storage area for processing, testing, and disposal.
d. Any petroleum-impacted soil shall be loaded into dump trucks for transport without spillage. Care shall be taken during loading operations to minimize the potential for spillage, tracking, or other means of deposition of the petroleum-impacted soil outside of the work area. Petroleum-impacted soil which becomes spilled on roads, streets, or other site areas during loading operations shall be immediately cleaned up to the satisfaction of the NTR.

3.3 FILLING AND BACKFILLING

Fill to pre-excavation elevations. Initial compaction will be obtained by truck traffic during unloading of fill material. Compaction tests will be performed at the discretion of the Construction Representative as outlined in the work plan addendum. Finish to a relatively smooth surface with existing on-site equipment or a smooth roller, or both. Soil material used for fill shall be free of debris, roots, wood, scrap material, vegetation, refuse, soft unsound particles, and deleterious or objectionable materials.

3.4 COMPACTION

Expressed as a percentage of maximum density. Density requirements specified herein are for cohesionless materials.

3.4.1 General Site

Compact underneath areas designated for vegetation to 85 percent of ASTM D 698.

3.4.2 Paved and Traffic Loading Areas

Compact underneath paved areas or areas designated for vehicular traffic to 95 percent of ASTM D 698.

3.5 FINISH OPERATIONS

3.5.1 Grading

Finish grades as indicated and to match existing adjacent grades. For existing grades that will remain but which were disturbed by Contractor's operations, grade as directed.

3.5.2 Seed

Seed shall match existing vegetation. Provide seed at 5 lbs per 1000 square feet. Provide CID A-A-1909, Type I, Class 2, 10-10-10 analysis fertilizer at 25 lbs per 1000 square feet. Provide mulch and water to establish an acceptable stand of grass.

3.5.3 Protection of Surfaces

Protect newly graded areas from traffic, erosion, and settlements that may occur. Repair or reestablish damaged grades, elevations, or slopes.

3.6 DISPOSITION OF SURPLUS MATERIAL

Remove from Government property surplus or other soil material not required or suitable for filling or backfilling, and brush, refuse, stumps, roots, and timber.

-- End of Section --

SECTION 02571

PAVEMENT REMOVAL AND REPLACEMENT
01/97

PART 1 GENERAL

1.1 REFERENCES

The publications listed below form a part of this specification to the extent referenced. The publications are referred to in the text by the basic designation only.

AMERICAN SOCIETY FOR TESTING AND MATERIALS (ASTM)

ASTM D 698	1991 Laboratory Compaction Characteristics of Soil Using Standard Effort (12,400 ft-lbf/ft (600 kN - m/m))
ASTM D 2487	1992 Classification of Soils for Engineering Purposes

DEPARTMENT OF TRANSPORTATION (DOT)

DOT D-6.1	1988 Uniform Traffic Control Devices for Streets and Highway

NORTH CAROLINA DEPARTMENT OF TRANSPORTATION (NCDOT)

NCDOT RS	1990 Roads and Structures

1.2 SUBMITTALS

Submit the following in accordance with Section C, Part 7, of the Basic Contract.

1.2.1 SD-05, Design Data

a. Job mix formula

1.2.1.1 Job Mix Formula

Submit the mix design, including mixing temperature, for approval. The bituminous mix design shall include a certified laboratory analysis of mix composition with marshall stability value, void content, and flow. After mix design approval, job mixes shall conform to the range of tolerances specified in NCDOT RS.

1.3 QUALITY ASSURANCE

1.3.1 Modifications to References

Except as specified herein, work and materials shall be in accordance with the NCDOT RS. The provisions therein for method of measurement and payment do not apply, and references to "Engineer" and "State" shall mean the "NTR".

1.4 BARRICADES AND SIGNALS

Provide and maintain temporary signs, signals, lighting devices, markings, barricades, and channelizing and hand signaling devices in accordance with DOT D-6.1 to protect personnel and new construction from damage by equipment and vehicles until the surface is approved by the Contracting Officer. Work shall be conducted to permit a minimum of one traffic lane on two lane streets, and two traffic lanes on four lane streets, to be open for traffic at all times.

PART 2 PRODUCTS

2.1 MATERIALS

2.1.1 Bituminous Concrete

NCDOT RS, Section 645, Type I-1 for material and mix. Provide crushed stone aggregate for the bituminous mix.

2.1.2 Stone Base Course

NCDOT RS, Section 1005 and 1010 for aggregate base course, standard size no. ABC.

2.1.3 Bituminous Tack Coat

NCDOT RS, Section 605. Emulsified asphalts shall be diluted at the rate of one part water to one part asphalt.

PART 3 EXECUTION

3.1 PAVEMENT INSTALLATION

The work includes the removal of existing pavement and the provision of new pavement where trenches, pits, and other excavations are made in the existing pavement. Except as otherwise indicated, the restored pavement area shall be the same kind and thickness as previously existed, and shall match and tie into the surrounding pavement in a neat and acceptable manner.

3.2 ROADS AND PARKING AREAS

3.2.1 Pavement Removal

Make a straight line sawcut 12 inches beyond the edge of excavation to a minimum depth of 2 inches for bituminous concrete pavement and 6 inches for portland cement concrete pavement. Portland cement concrete pavement overlaid with bituminous concrete shall be sawcut to a minimum depth of 8 inches. The pavement shall be broken up and removed, along with its base and subgrade, to the depth indicated or specified.

3.2.2 Subgrade Placement

Determine in-place density of existing subgrade, if compacted to 95 percent of ASTM 698 maximum density, no compaction of existing subgrade will be required. Density requirements are for cohesionless materials. When cohesive materials are encountered or used, density requirements may be reduced by 5 percent. Cohesionless materials are ASTM D 2487 classified as GW, GP, SW, and SP. Materials classified as GM and SM will be identified as cohesionless only when the fines have a plasticity index of zero. Cohesive materials are ASTM D 2487 classified as GC, SC, ML, Cl, MH, and CH. Materials classified as GM and SM will be identified as cohesive only when the fines have a plasticity index greater than zero.

3.2.3 Stone Base Placement

Provide a stone base course a minimum of 8 inches thick, unless indicated otherwise. Place the stone base in two equal lifts, with each lift compacted to 95 percent ASTM 698 maximum density. At the Contractor's option, bituminous concrete may be provided in lieu of stone base material.

3.2.4 Bituminous Concrete Placement

Provide a tack coat on the exposed edges of the cold joints and on the bituminous concrete base when provided, and provide a minimum 2-inch thick bituminous concrete surface course, unless indicated otherwise, in accordance with NCDOT RS. Place in maximum of 2-inch lifts with each lift compacted to 96 percent of maximum laboratory density. The finished surface shall be uniform in texture and appearance and free of cracks and creases.

3.2.5 Portland Cement Concrete Pavement

Provide reinforcing to match existing reinforcing. The concrete surface shall be struck off, screened, tamped, and finished to the same surface elevation and texture as the adjacent existing concrete. Cure concrete for 7 days. Maintain existing joint patterns.

-- End of Section --

SECTION 03302

CAST-IN-PLACE CONCRETE
02/97

PART 1 GENERAL

1.1 REFERENCES

The publications listed below form a part of this specification to the extent referenced. The publications are referred to in the text by the basic designation only.

AMERICAN CONCRETE INSTITUTE (ACI)

ACI 301	1989 Structural Concrete for Buildings
ACI 304R	1989 Measuring, Mixing, Transporting, and Placing Concrete
ACI 305R	1991 Hot Weather Concreting
ACI 306.1	1990 Cold Weather Concreting

AMERICAN SOCIETY FOR TESTING AND MATERIALS (ASTM)

ASTM A 185	1990 (Rev. A) Steel Welded Wire Fabric, Plain, for Concrete Reinforcement
ASTM D 497	1990 (Rev. B) Steel Welded Wire Fabric, Deformed, for Concrete Reinforcement
ASTM A 615/A 615M	1992 (Rev. B) Deformed and Plain Billet-Steel Bars for Concrete Reinforcement
ASTM A 616/A 616M	1992 Rail-Steel Deformed and Plain Bars for Concrete Reinforcement
ASTM A 617/A 617M	1992 Axle-Steel Deformed and Plain Bars for Concrete Reinforcement
ASTM A 706/A 706M	1992 (Rev. B) Low-Alloy Steel Deformed Bars for Concrete Reinforcement
ASTM C 33	1992 (Rev. A) Concrete Aggregates
ASTM C 94	1992 (Rev. A) Ready-Mixed Concrete
ASTM C 143	1990 (Rev. A) Slump of Hydraulic Cement Concrete
ASTM C 150	1992 Portland Cement
ASTM C 171	1992 Sheet Materials for Curing Concrete
ASTM C 172	1990 Sampling Freshly Mixed Concrete

ASTM C 173	1978 Air Content of Freshly Mixed Concrete by the Volumetric Method
ASTM C 231	1991 (Rev. B) Air Content of Freshly Mixed Concrete by the Pressure Method
ASTM C 260	1986 Air-Entraining Admixtures for Concrete
ASTM C 494	1992 Chemical Admixtures for Concrete
ASTM C 595	1993 Blended Hydraulic Cements
ASTM C 618	1993 Fly Ash and Raw or Calcined Natural Pozzolan for Use as a Mineral Admixture in Portland Cement Concrete
ASTM C 920	1987 Elastomeric Joint Sealants
ASTM C 989	1989 Ground Granulated Blast-Furnace Slag for Use in Concrete and Mortars
ASTM C 1107	1991 (Rev. A) Packaged Dry, Hydraulic-Cement Grout (Nonshrink)
ASTM D 1190	1974 (R 1980) Concrete Joint Sealer, Hot-Poured Elastic Type
ASTM D 1751	1983 (R 1991) Preformed Expansion Joint Filler for Concrete Paving and Structural Construction (Nonextruding and Resilient Bituminous Types)
ASTM D 1752	1984 (R 1992) Preformed Sponge Rubber and Cork Expansion Joint Fillers for Concrete Paving and Structural Construction
ASTM D 4397	1991 Polyethylene Sheeting for Construction, Industrial, and Agricultural Applications

1.2 MODIFICATION OF REFERENCES

Accomplish work in accordance with ACI publications, except as modified by this section. Consider the advisory or recommended provisions to be mandatory, as though the word "shall" had been substituted for the words "should" or "could" or "may," wherever they appear. Interpret reference to the "Building Official," the "Structural Engineer," and the "Architect/Engineer" to mean the NTR.

1.3 DELIVERY, STORAGE, AND HANDLING

Do not deliver concrete until ready for concrete placement. Store concrete aggregates to prevent contamination or segregation. Store reinforcement of different sizes and shapes in separate piles or racks raised above the ground to avoid excessive rusting. Protect from contaminants such as grease, oil, and dirt. Provide for accurate identification after bundles are broken and tags removed.

PART 2 PRODUCTS

2.1 CONCRETE

2.1.1 Concrete Mix Design

ACI 301, except as modified herein. Unless indicated otherwise, concrete shall have a 28-day compressive strength of 4000 psi. Slump shall be between 2 and 4 inches in accordance with ASTM C 143. Provide ASTM C 33 aggregate size No. 57 or 67. Accomplish 2 to 3 percent air-entrainment.

2.1.2 Ready-Mixed Concrete

ASTM C 94, except as modified herein. Ready-mixed concrete is defined in this specification as concrete produced regularly by a commercial establishment and delivered to the purchaser in the plastic state.

2.2 MATERIALS

2.2.1 Cement

ASTM C 150, Type I or II or ASTM C 595, Type IP (MS) or IS (MS) blended cement, except as modified herein. The blended cement shall consist of a mixture of ASTM C 150 cement and one of the following materials: ASTM C 618 pozzolan or fly ash, or ASTM C 989 ground iron blast furnace slag. The pozzolan/fly ash content shall not exceed 25 percent nor the ground iron blast furnace slag 50 percent by weight of the total cementitious material. For exposed concrete, use one manufacturer for each type of cement, ground slag, fly ash, and pozzolan.

2.2.1.1 Fly Ash and Pozzolan

ASTM C 618, Type N, F, or C, except that the maximum allowable loss on ignition shall be 6 percent for Type N and F. Add with cement.

2.2.1.2 Ground Iron Blast-Furnace Slag

ASTM C 989, Grade 120.

2.2.2 Water

Water shall be potable.

2.2.3 Aggregates

ASTM C 33. Obtain aggregates for exposed concrete surfaces from one source. Aggregates shall not contain any substance which may be deleteriously reactive with the alkalies in the cement.

2.2.4 Admixtures

ASTM C 260 for air-entrained concrete. ASTM C 494 for water reducing (Type A, D, or E), accelerating (Type C), and retarding (Type B or D), to be used only when approved. Calcium chloride shall not be used as an admixture.

2.2.5 Reinforcement

2.2.5.1 Reinforcing Bars

ASTM A 706/A 706M, Grade 60; ASTM A 615/A 615M and ASTM A 617/A 617M, Grade 60; or ASTM A 616/A 616M, Grade 60.

2.2.5.2 Welded Wire Fabric

ASTM A 497 or ASTM A 185, 6 by 6, W2.9 by W2.9, unless otherwise indicated.

2.2.6 Materials for Curing Concrete

2.2.6.1 Impervious Sheeting

ASTM C 171; waterproof paper, clear or white polyethylene sheeting, or polyethylene-coated burlap.

2.2.6.2 Liquid Chemical Sealer-Hardener Compound

Compound shall be magnesium fluosilicate which when mixed with water seals and hardens the surface of the concrete. Do not use on exterior slabs exposed to freezing conditions. Compound shall not reduce the adhesion of resilient flooring, tile, paint, roofing, waterproofing, or other material applied to concrete.

2.2.7 Expansion-Joint Filler

ASTM D 1751 or ASTM D 1752, 1/2-inch thick, unless otherwise indicated.

2.2.8 Joint Sealant

2.2.8.1 Horizontal Surfaces (3 percent slope, maximum)

a. Outside Buildings: ASTM D 1190.
b. Inside Buildings: ASTM D 1190.

2.2.8.2 Vertical Surfaces (greater than 3 percent slope)

ASTM C 920, Type M, Grade NS, Class 25.

2.2.9 Vapor Barrier

ASTM D 4397 polyethylene sheeting, minimum 6 mil thickness.

2.2.10 Nonshrink Grout

ASTM C 1107.

PART 3 EXECUTION

3.1 FORMS

ACI 301. Set forms true to line and grade and make mortar-tight. Chamfer above grade exposed joints, edges, and external corners of concrete 3/4 inch, unless otherwise indicated. Before concrete placement, coat the contact surfaces of forms with a nonstaining form coating compound. Do not use mineral oil on formed surfaces to be painted. Prevent concrete damage during form removal. Concrete for footings

may be placed in excavations without forms upon inspection and approval by the NTR. Excavation width shall be a minimum of 4 inches greater than finished dimensions indicated.

3.2 PLACING REINFORCEMENT AND MISCELLANEOUS MATERIALS

ACI 301. Provide bars, wire fabric, and other reinforcing materials, including wire tires, supports, and other devices necessary to install and secure the reinforcement.

3.2.1 Cover and Splicing

ACI 301, unless otherwise indicated.

3.2.2 Setting Miscellaneous Material

Place and secure anchors and bolts, pipe sleeves, conduits, and other such items in position before concrete placement. Plumb anchor bolts and check location and elevation. Temporarily fill voids in sleeves with readily removable material to prevent the entry of concrete.

3.2.3 Vapor Barrier

Provide beneath the on-grade concrete floor slab. Lap 12 inches minimum. Remove torn, punctured, or damaged vapor barrier material and provide with new material prior to placing concrete. Place concrete to prevent damage to the vapor barrier material.

3.2.4 Construction Joints

ACI 301. Continue reinforcement across joints, unless otherwise indicated.

3.2.5 Expansion Joints and Contraction Joints

ACI 301. For slabs on grade, provide at edges of interior floor slabs, adjacent to walls, and as indicated. Make expansion joints 0.5 inch wide, except as indicated otherwise. Fill expansion joints not exposed to weather with preformed joint material. Seal joints exposed to weather with joint sealant. Do not extend reinforcement or other embedded metal items bonded to the concrete through any expansion joint, unless an expansion sleeve is used. Provide contraction joints, either formed or saw cut or cut with a jointing tool to the indicated depth after the surface has been finished. Sawed joints shall be completed within 4 to 12 hours after concrete placement. Protect joints from intrusion of foreign matter.

3.3 MEASURING, MIXING, TRANSPORTING, AND PLACING CONCRETE

ACI 301R, except as modified herein. ASTM C 94; machine mix concrete and provide mandatory batch ticket information for each load of ready mix concrete. Begin mixing within 30 minutes after the cement has been added to the aggregates. Place concrete within 90 minutes of either addition of mixing water to cement and aggregates or addition of cement to aggregates if the air temperature is less than 85 degrees F. Reduce mixing time to 60 minutes if the air temperature is greater than 85 degrees F. Additional water may be added, provided that both the specified maximum slump and water-cement ratio are not exceeded. If the entrained air content falls below the specified limit, add a sufficient quantity of admixture to bring the entrained air content within the specified limits. Do not place concrete when weather conditions prevent proper placement and consolidation; in uncovered areas during periods of precipitation; or in standing water. Prior to placing concrete, remove dirt, construction debris, and water, snow, and ice from within the forms. Consolidate concrete slabs greater than 4 inches depth with high frequency, internal, mechanical vibrating equipment supplemented by hand spading and tamping. Consolidate concrete slabs 4 inches or less in depth by tamping, spading, and settling with a heavy leveling straight edge.

3.3.1 Cold Weather

ACI 306.1. Provide and maintain 50 degrees F minimum concrete temperature. Do not place concrete when the ambient temperature is below 40 degrees F. Cover concrete and provide with a source of heat sufficient to maintain 50 degrees F minimum while curing.

3.3.2 Hot Weather

ACI 305R. Concrete temperature from initial mixing through final cure shall not exceed 90 degrees F. Cool ingredients before mixing, or substitute chip ice for part of required mixing water or use other suitable means to control concrete temperature to prevent rapid drying of newly placed concrete. Shade the fresh concrete and start curing as soon as the surface of the fresh concrete is sufficiently hard to permit curing without damage.

3.4 SURFACE FINISHES

ACI 301 for repair and finish, unless otherwise specified. Slope floors uniformly to drains where drains are provided. After troweling is completed, apply a liquid chemical sealer-hardener to interior slabs that do not receive floor covering.

3.4.1 Defects

Repair formed surfaces by removing minor honeycombs, pits greater than 1 square inch surface area or 0.25 inch maximum depth, or otherwise defective areas. Provide edges perpendicular to the surface and patch with nonshrink grout. Patch tie holes and defects when forms are removed. Concrete with extensive honeycomb (including exposed steel reinforcement, cold joints, entrapped debris, separated aggregate, or other defects) which affect the serviceability or structural strength will be rejected, unless correction of defects is approved. Obtain approval of corrective action prior to repair. The surface of the concrete shall not vary more than the allowable tolerances of ACI 301. Exposed surfaces shall be uniform in appearance and finished to a smooth form finish, unless otherwise specified.

3.4.2 Floated Finish

Place, consolidate, and immediately strike off concrete to obtain proper contour, grade, and elevation before bleedwater appears. Permit concrete to attain a set sufficient for floating and supporting the weight of the finisher and equipment. If bleedwater is present prior to floating the surface, drag the excess water off or remove by absorption with porous materials. Do not use dry cement to absorb bleedwater. Surface shall be level to within 1/4 inch in 10 feet where floor drains are not provided.

3.4.3 Steel Troweled Finish

First, provide a floated finish. When slab has attained a proper set, trowel to a smooth, hard, dense finish. Finished surfaces shall be free of trowel marks, uniform in texture, flat within 0.01 foot (approximately 1/8 inch) in 10 feet. Hand-finish portions of the slab not accessible to power finishing equipment (e.g., edges, corners) to match the remainder of the slab. Power trowel once and finally hand trowel where a finished floor covering (e.g., tile, carpet) is specified. Power trowel twice and finally hand trowel for exposed concrete floors. Power trowel three times and finally hand trowel to provide for an extra dense wearing surface where indicated.

3.4.4 Broomed Finish

Provide for exterior walks, platforms, patios, and ramps, unless otherwise indicated. Provide a floated finish, then finish with a flexible bristle broom. Permit surface to harden sufficiently to retain the scoring or ridges. Broom transverse to traffic or at right angles to the slope of the slab.

3.5 CURING AND PROTECTION

ACI 301. Protect concrete form injurious action by sun, rain, wind, flowing water, frost, mechanical injury, tire marks, and oil stains. Do not allow concrete to dry out from time of placement until the expiration of the curing period. Forms may removed 48 hours after concrete placement.

3.5.1 Moist Curing

Provide for the removal of water without erosion or damage to the structure.

3.5.1.1 Pervious Sheeting

Cover the entire surface of the concrete with two thicknesses of wet sheeting. Mats shall be at least as long as the width of the surface to be cured. During application, do not drag the mats over the finished concrete nor over mats already placed. Completely cover surface and edges of the concrete, with a 6-inch overlap over adjacent mats. Wet mats thoroughly and keep continuously wet throughout the curing period.

3.5.2 Impervious-Sheeting Curing

Wet the entire exposed surface thoroughly with a fine spray of water and cover with impervious sheeting throughout the curing period. Lay sheeting directly on the concrete surface and overlap edges 12 inches minimum. Provide sheeting not less than 18 inches wider than the concrete surface to be cured. Secure edges and transverse laps to form closed joints. Repair torn or damaged sheeting or provide new sheeting.

3.5.3 Liquid Chemical Sealer-Hardener Curing

Provide for interior floors that do not receive a floor covering, or in lieu of liquid membrane-forming compound curing for other surfaces. Apply sealer-hardener in accordance with manufacturer's recommendations. Seal or cover joints and openings in which joint sealant is to be applied, as required by the joint sealant manufacturer.

3.5.4 Curing Periods

Allow 7 days.

3.6 SAMPLING AND TESTING

3.6.1 Sampling

ASTM C 172. Collect samples of fresh concrete to perform tests specified.

3.6.2 Testing

3.6.2.1 Slump Tests

ASTM C 143. Take samples during concrete placement. The maximum slump may be increased as specified with the addition of an approved admixture provided that the water-cement ratio is not exceeded. Perform tests at commencement of concrete placement and for each batch (minimum) or every 10 cubic yards (maximum) of concrete.

3.6.2.2 Air Content

ASTM C 173 or ASTM C 231. Test air-entrained concrete for air content at the same frequency as specified for slump tests.

-- End of Section --

SECTION 16011

ELECTRICAL GENERAL REQUIREMENTS
06/94

PART I GENERAL

1.1 REFERENCES

The publications listed below form a part of this specification to the extent referenced. The publications are referred to in the text by the basic designation only.

AMERICAN NATIONAL STANDARDS INSTITUTE (ANSI)

ANSI C2	1993 National Electrical Safety Code

CODE OF FEDERAL REGULATIONS (CFR)

29 CFR 1910.147	Control of Hazardous Energy (Lock Out/Tag Out)

FEDERAL SPECIFICATIONS (FS)

FS L-P-387	(Rev. A) (Int Am. 2) Plastic Sheet Laminated, Thermosetting (for Design Plates)

INSTITUTE OF ELECTRICAL AND ELECTRONICS ENGINEERS, INC. (IEEE)

IEEE 100	1992 Dictionary of Electrical and Electronics Terms

NATIONAL ELECTRICAL MANUFACTURERS ASSOCIATION (NEMA)

NEMA ICS 6	1988 (Rev. 1) Enclosures for Industrial Control and Systems

NATIONAL FIRE PROTECTION ASSOCIATION (NFPA)

NFPA 70	1996 National Electrical Code

1.2 RELATED REQUIREMENTS

This section applies to certain section 01012, "Remediation System Installation and Performance." This section applies to all sections of Division 16, "Electrical" of this project specification unless specified otherwise in the individual sections.

1.3 DEFINITIONS

a. Unless otherwise specified or indicated, electrical and electronics terms used in the specifications, and on the drawings, shall be as defined in IEEE 100.

b. The technical sections referred to herein are those specification sections that describe products, installation procedures, and equipment operations and that refer to this section for detailed description of submittal types.

c. The technical paragraphs referred to herein are those paragraphs in PART 2 - PRODUCTS and PART 3 - EXECUTION of the technical sections that describe products, systems, installation procedures equipment, and test methods.

1.4 ELECTRICAL CHARACTERISTICS

Electrical characteristics for this project shall be 460 volts, three phase, three wire. Final connections to the power distribution system at the existing overhead voltage lines shall be made by the Contractor as directed by the Contracting Officer.

1.5 SUBMITTALS

Submittals required in the sections which refer to this section shall conform to the requirements of Section 01010, "General Paragraphs" and to the following additional requirements. Submittals shall include the manufacturer's name, trade name, place of manufacture, catalog model or number, nameplate data, size, layout dimensions, capacity, project specification and technical paragraph reference. Submittals shall also include applicable federal, military, industry, and technical society publication references, and years of satisfactory service, and other information necessary to establish contract compliance of each item to be provided. Photographs of existing installations are unacceptable and will be returned without approval.

1.5.1 Manufacturer's Catalog Data

Submittals for each manufactured item shall be current manufacturer's descriptive literature of cataloged products, equipment drawings, diagrams, performance and characteristic curves, and catalog cuts. Handwritten and typed modifications and other notations not part of the manufacturer's preprinted data will result in the rejection of the submittal. Should manufacturer's data require supplemental information for clarification, the supplemental information shall be submitted as specified for certificates of compliance.

1.5.2 Drawings

Submit drawings a minimum of 14 inches by 20 inches in size using a minimum scale of 1/8 inch per foot, except as specified otherwise. Include wiring diagrams and installation details of equipment indicating proposed location, layout and arrangement, control panels, accessories, piping, ductwork, and other items that must be shown to ensure a coordinated installation. Wiring diagrams shall identify circuit terminals and indicate the internal wiring for each item of equipment and the interconnection between each item of equipment. Drawings shall indicate adequate clearance for operation, maintenance, and replacement of operating equipment devices.

1.5.3 Instructions

Where installation procedures or part of the installation procedures are required to be in accordance with manufacturer's instructions, submit printed copies of those instructions prior to installation. Installation of the item shall not proceed until manufacturer's instructions are received. Failure to submit manufacturer's instructions shall be cause for rejection of the equipment or material.

1.5.4 Certificates

Submit manufacturer's certifications as required for products, materials finishes, and equipment as specified in the technical sections. Certificates from material suppliers are not acceptable. Preprinted certifications and copies of previously submitted documents will not be acceptable. The manufacturer's certifications shall name the appropriate products, equipment, or materials and the publication specified as controlling the quality of that item. Certification shall not contain statements to imply that the item does not meet requirements specified, such as "as good as"; "achieve the same end use and results as materials formulated in accordance with the referenced publications"; or "equal or exceed the service and performance of the specified material." Certifications shall simply state that the item conforms to the requirements specified. Certificates shall be printed on the

manufacturer's letterhead and shall be signed by the manufacturer's official authorized to sign certificates of compliance.

1.5.4.1 Reference Standard Compliance

Where equipment or materials are specified to conform to industry and technical society reference standards of the organizations such as American National Standards Institute (ANSI), American Society for Testing and Materials (ASTM), National Electrical Manufacturers Association (NEMA), Underwriters Laboratories Inc. (UL), and Association of Edison Illuminating Companies (AEIC), submit proof of such compliance. The label or listing by the specified organization will be acceptable evidence of compliance.

1.5.4.2 Independent Testing Organization Certificate

In lieu of the label or listing, submit a certificate from an independent testing organization, competent to perform testing, and approved by the Contracting Officer. The certificate shall state that the item has been tested in accordance with the specified organization's test methods and that the item complies with the specified organization's reference standard.

1.6 QUALITY ASSURANCE

1.6.1 Material and Equipment Qualifications

Provide materials and equipment that are products of manufacturers regularly engaged in the production of such products which are of equal material, design and workmanship. Products shall have been in satisfactory commercial or industrial use for 2 years prior to bid opening. The 2-year period shall include applications of equipment and materials under similar circumstances and of similar size. The product shall have been on sale on the commercial market through advertisements, manufacturers' catalogs, or brochures during the 2-year period. Where two or more items of the same class of equipment are required, these items shall be products of a single manufacturer; however, the component parts of the item need not be the products of the same manufacturer unless stated in the technical section.

1.6.2 Regulatory Requirements

Equipment, materials, installation, and workmanship shall be in accordance with the mandatory and advisory provisions of NFPA 70.

1.6.3 Alternative Qualifications

Products having less than a 2-year field service record will be acceptable if a certified record of satisfactory field operation for not less than 6000 hours, exclusive of the manufacturers' factory or laboratory tests, is furnished.

1.6.4 Service Support

The equipment items shall be supported by service organizations which are reasonably convenient to the equipment installation in order to render satisfactory service to the equipment on a regular and emergency basis during the warranty period of the contract.

1.6.5 Manufacturer's Nameplate

Each item of equipment shall have a nameplate bearing the manufacturer's name, address, model number, and serial number securely affixed in a conspicuous place; the nameplate of the distributing agent will not be acceptable.

1.6.6 Modification of References

In each of the publications referred to herein, consider the advisory provisions to be mandatory, as though the word, "shall" had been substituted for "should" wherever it appears. Interpret references in these publications to the "authority having jurisdiction," or words of similar meaning, to mean the Contracting Officer.

1.7 NAMEPLATES

FS L-P-387. Provide laminated plastic nameplates for each panelboard, equipment enclosure, relay, switch, and device. Each nameplate inscription shall identify the function and, when applicable, the position. Nameplates shall be melamine plastic, 0.125-inch thick, white with black center core. Surface shall be matte finish. Covers shall be square. Accurately align lettering and engrave into the core. Minimum size of nameplates shall be 1 by 2.5 inches. Lettering shall be a minimum of 0.25-inch high normal block style.

1.8 ELECTRICAL REQUIREMENTS

Electrical installations shall conform to ANSI C2, NFPA 70, and requirements specified herein.

1.8.1 Motors and Equipment

Provide electrical components of mechanical equipment, such as motors, motor starters, control or push-button stations, float or pressure switches, solenoid valves, and other devices functioning to control mechanical equipment, including control wiring and conduit for circuits rated 120 volts or less, to conform with the requirements of the section covering the mechanical equipment. Extended voltage range motors shall not be permitted. The interconnecting power wiring and conduit, control wiring rated 120 volts (nominal) and conduit, and the electrical power circuits shall be provided under Division 16.

1.8.2 Wiring and Conduit

Provide wiring to breaker panel of packaged equipment. Provide power wiring and conduit for field-installed equipment under Section 16402, "Interior Wiring Systems." Power wiring and conduit shall conform to Section 16402. Control wiring and conduit shall be provided under, and conform to the requirements of the section specifying associated equipment.

1.9 LOCKOUT REQUIREMENTS

Provide disconnecting means capable of being locked out for machines and other equipment to prevent unexpected startup or release of stored energy in accordance with 29 CFR 1910.147.

PART 2 PRODUCTS

Not used.

PART 3 EXECUTION

3.1 PAINTING OF EQUIPMENT

3.1.1 Factory Applied

Electrical equipment shall have factory-applied painting systems which shall, as a minimum, meet the requirements of NEMA ICS 6 corrosion-resistance test.

3.2 NAMEPLATE MOUNTING

Provide number, location, and letter designation of nameplates as indicated. Fasten nameplates to the device with a minimum of two sheet-metal screws or two rivets.

-- End of Section --

SECTION 16370

OVERHEAD ELECTRICAL WORK
03/95

PART 1 GENERAL

1.1 REFERENCES

The publications listed below form a part of this specification to the extent referenced. The publications are referred to in the text by the basic designation only.

NATIONAL ELECTRICAL MANUFACTURERS ASSOCIATION (NEMA)

NEMA WC 5	(1992) Thermoplastic-Insulated Wire and Cable for the Transmission and Distribution of Electrical Energy

NATIONAL FIRE PROTECTION ASSOCIATION (NFPA)

NFPA 70	(1996) National Electrical Code

RURAL ELECTRIFICATION ADMINISTRATION (REA)

REA 43-5(1989)	List of Materials Acceptable for Use on Systems of REA Electrification Borrowers

UNDERWRITERS LABORATORIES INC. (UL)

UL 6	(1993; Bul. 1993) Rigid Metal Conduit
UL 83	(1991; Bul. 1991, 1992, and 1993, R 1993) Thermoplastic-Insulated Wires and Cables
UL 510	(1994; R 1994) Chloride, Polyethylene, and Rubber Insulating Tape

1.2 RELATED REQUIREMENTS

Section 16011, "Electrical General Requirements" applies to this section with additions and modifications specified herein.

1.3 UNDERGROUND SERVICE

Terminate underground service into buildings at a point five feet outside building. Connections of underground service to service switch, panelboard or load center are included in Section 16402, "Interior Wiring Systems." Protect ends of underground conduit with threaded metal caps until connections are made. Underground service from the breaker panel to the weatherhead on pole shall be provided under this section.

1.4 SUBMITTALS

Submit the following in accordance with Section 01010, "Submittals."

1.4.1 SD-02, Manufacturer's Catalog Data

a. Conductors

b. Meter base

1.4.2 SD-05, Design Data

a. Engineering Design Calculations

1.4.2.1 Engineering Design Calculations

Submit calculations indicating cable line tension and sag requirements taking into consideration wind loads, ice loads, and temperature changes. Provide calculations based on heavy loading.

Provide calculations for sag, guying, anchoring, etc., in accordance with recognized standard formulas as referenced in publications:

REA- Rural Electrification Administration
Westinghouse Transmission and Distribution Reference Book
Electrical Engineers Handbook - Pender/Delmar
The Linemans Handbook

1.5 SCHEDULING

Notify the Contracting Officer in writing at least 15 days prior to date connections are required. Obtain approval before interrupting service.

PART 2 PRODUCTS

2.1 MATERIALS AND EQUIPMENT

Consider materials specified herein or shown on contract drawings which are identical to materials listed in REA 43-5 as conforming to requirements.

2.2 SECONDARY-SERVICE CONDUCTORS

Aerial Secondary conductors shall be copper, quadruplex with 600-volt cross-linked polyethylene insulation on the phase wires. Neutral shall be bare hard drawn copper messenger. Minimum size shall be No. 2 AWG stranded unless otherwise indicated. Service conductors shall be copper THWN. Minimum size shall be 2 AWG. Conductors shall conform to NEMA WC 5 for THWN insulation.

2.3 CONDUIT RISERS AND CONDUCTORS

Rigid galvanized steel conduit conforming to UL 6.

2.3.1 Secondary Riser

600-volt metering riser conductors shall be copper, THWN conforming to UL 83.

2.4 Metering Enclosure

Metering enclosure shall be of galvanized steel, weatherproof construction (NEMA 3R) for mounting on groundwater treatment equipment enclosure. Coordinate with Base Utilities.

a. Provide meter socket per ANSI C12.7.

2.5 ELECTRICAL TAPES

Tapes shall be UL listed for electrical insulation and other purposes in wire and cable splices. Terminations, repairs and miscellaneous purposes, electrical tapes shall comply with UL 510.

2.6 CAULKING COMPOUND

Compound for sealing of conduit risers shall be of a puttylike consistency workable with hands at temperatures as low as 35 degrees F, shall not slump at a temperature of 300 degrees F, and shall not harden materially when exposed to air. Compound shall readily caulk or adhere to clean surfaces of the materials with which it is designed to be used. Compound shall have no injurious effects upon the workmen or upon the materials.

PART 3 EXECUTION

3.1 INSTALLATION

Provide installation conforming to requirements of NFPA 70 for overhead services. Provide material required to make connections into existing system and perform excavating, backfilling, and other incidental labor. Consider street, alleys, roads, and drives "public." Pole configuration shall be as indicated.

3.1.1 Hardware

Provide hardware with washer against wood and with nuts and lock nuts applied wrench tight. Provide locknuts on threaded hardware connections. Locknuts shall be M-F style and not palnut style.

3.1.2 Conductors

Conductors shall be handled with care necessary to prevent nicking, kinking, gouging, flattening, or otherwise deforming, or weakening conductor or impairing its conductivity. Remove damaged sections of conductor and splice conductor.

3.1.3 Installing Meter System

Metering enclosure shall house KWH meter. Secure the enclosure to the groundwater treatment equipment enclosure at a height of 5 feet above grade to center of the metering enclosure.

3.1.4 Risers

Secure conduits on poles by two hole galvanized steel pipe straps spaced no more than 4 feet apart and within 3 feet of any outlet or termination. Ground metallic conduits.

3.2 FIELD QUALITY CONTROL

As an exception to requirements that may be stated elsewhere in contract, the NTR shall be given 5 working days notice prior to each test.

3.2.1 Meter

Check disc rotation to ensure that it turns in correct direction for each current-potential phase circuit individually.

-- End of Section --

SECTION 16402

INTERIOR WIRING SYSTEMS
06/94
Revised 04/97

PART I GENERAL

1.1 REFERENCES

The publications listed below form a part of this specification to the extent referenced. The publications are referred to in the text by the basic designation only.

AMERICAN NATIONAL STANDARDS INSTITUTE (ANSI)

ANSI C8O.1	1990 Rigid Steel Conduit - Zinc Coated

AMERICAN SOCIETY FOR TESTING AND MATERIALS (ASTM)

ASTM B 1	1990 Hard-Drawn Copper Wire
ASTM B 8	1990 Concentric-Lay-Stranded Copper Conductors, Hard, Medium-Hard, or Soft

FEDERAL SPECIFICATIONS (FS)

FS L-P-387	(Rev. A) (Int Am. 2) Plastic Sheet, Laminated, Thermosetting (for Design Plates)

NATIONAL ELECTRICAL MANUFACTURERS ASSOCIATION (NEMA)

NEMA ICS 1	1988 (Rev. 1-2) Industrial Control and Systems
NEMA ICS 2	1988 Industrial Control Devices Controllers and Assemblies
NEMA ICS 4	1983 (R 1988) (Rev. 1) Terminal Blocks for Industrial Use
NEMA ICS 6	1988 (Rev. 1) Enclosures for Industrial Control and Systems
NEMA MG 1	1993 Motors and Generators
NEMA ST 20	1992 Dry-Type Transformers for General Applications
NEMA WD 1	1983 (R 1989) Wiring Devices
NEMA WD 6	1988 Wiring Devices - Dimensional Requirements
NEMA KS 1	1990 Enclosed and Miscellaneous Distribution Equipment Switches (600 Volts Maximum)
NEMA FU 1	1986 Low Voltage Cartridge Fuses

NATIONAL FIRE PROTECTION ASSOCIATION (NFPA)

NFPA 70	1996 National Electrical Code

UNDERWRITERS LABORATORIES INC. (UL)

UL 6	1993 (Bul. 1993) Rigid Metal Conduit
UL 44	1991 (R 1993) (Bul. 1992 and 1993) Rubber-Insulated Wires and Cables
UL 50	1992 (R 1993) (Bul. 1993) Safety Enclosures for Electrical Equipment
UL 67	1988 (R 1993) (Bul. 1993) Panelboards
UL 83	1991(Bul. 1991)(R 1993)(Bul. 1992)(Bul. 1993)(R 1993) Thermoplastic-Insulated Wires and Cables
UL 198E	1988 (R 1988) (Bul. 1991 and 1992) Class R Fuses
UL 467	1993 (Bul. 1994) Grounding and Bonding Equipment
UL 486A	1991 (R 1992) (Err 1991) (Err 1992) Wire Connectors and Soldering Lugs for Use With Copper Conductors
UL 486B	1991(R 1992)(Err 992) Wire Connectors and Soldering Lugs for Use with Aluminum Conductors
UL 486C	1991 (R 1992) Splicing Wire Connectors
UL 489	1991 (Bul. 1992 and 1993) (R 1993) Molded-Case Circuit Breakers and Circuit-Breaker Enclosures
UL 498	1991 (R 1993) (Bul. 1992) Attachment Plugs and Receptacles
UL 508	1993 (Bul. 1993) Industrial Control Equipment
UL 510	1986 (R 1986) Insulating Tape
UL 514A	1991 (R 1993) (Bul. 1993) Metallic Outlet Boxes
UL 514B	1989 (Errata 1991) (R 1993) (Bul. 1993) Fittings for Conduit and Outlet Boxes
UL 869	1989 (R 1991) (Bul. 1992 and 1993) Service Equipment
UL 943	1993 (R 1993) Ground-Fault Circuit Interrupters

1.2 RELATED REQUIREMENTS

Section 16011, "Electrical General Requirements," applies to this section with additions and modifications specified herein.

1.3 SUBMITTALS

Submit the following in accordance with Section 01010, "General Paragraphs."

1.3.1 SD-02, Manufacturer' Catalog Data

a. Switches
b. Circuit breakers
c. Transformers
d. Outlet boxes and covers

1.3.2 SD-04, Drawings

a. Panelboards
b. Transformers

1.3.3 SD-08, Statements

Submit coordination data as specified in article entitled, "FUSES" of this section.

1.3.4 SD-11, Factory Test Reports

a. Transformer tests

1.3.4.1 Transformer Tests

Submittal shall include routine NEMA ST 20 transformer test results on each transformer and also contain the results of NEMA "design" and "prototype" tests that were made on transformers electrically and mechanically equal to those specified.

1.3.5 SD-12, Field Test Reports

a. 600-volt wiring test
b. GFCI receptacle test

1.4 QUALITY ASSURANCE

In each standard referred to herein, consider the advisory provisions to be mandatory, as though the word "shall" has been substituted for "should" wherever it appears. Interpret references in these standards to "authority having jurisdiction," or words of similar meaning, to mean Contracting Officer.

PART 2 PRODUCTS

2.1 MATERIALS AND EQUIPMENT

Materials, equipment and devices shall, at minimum meet requirements of UL, where UL standards are established for those items, and requirements of NFPA 70.

2.2 CONDUIT AND FITTINGS

Shall be rigid steel conduit, conforming to the following:

2.2.1 Rigid Steel Conduit

ANSI C80.1, UL 6.

2.2.2 Polyvinyl Chloride

Schedule 80

2.2.3 Fittings for Metal Conduit and Flexible Metal Conduit

UL 514B. Ferrous fittings shall be cadmium or zinc-coated in accordance with UL 514B.

2.2.3.1 Fittings for Rigid Metal Conduit

Threaded-type. Split couplings unacceptable.

2.3 OUTLET BOXES AND COVERS

UL 514A, cadmium or zinc-coated, if ferrous metal.

2.4 CABINETS, JUNCTION BOXES AND PULL BOXES

Volume greater than 100 cubic inches, UL 50, hot-dip, zinc-coated, if sheet steel.

2.5 WIRES AND CABLES

Wires and cables shall meet applicable requirements of NFPA 70 and UL for type of insulation, jacket, and conductor specified or indicated. Wires and cables manufactured more than 12 months prior to date of delivery to site shall not be used.

2.5.1 Conductors

Conductors No. 8 AWG and larger diameter shall be stranded. Conductors No. 10 AWG and smaller diameter shall be strained, except that conductors for remote control, alarm, and signal circuits, classes 1, 2, and 3, shall be stranded unless specifically indicated otherwise. Conductor sizes and ampacities shown are based on copper, unless indicated otherwise. All conductors shall be copper.

2.5.1.1 Equipment Manufacturer Requirements

When manufacturers equipment requires copper conductors at the terminations or requires copper conductors to be provided between components of equipment, provide copper conductors or splices, splice boxes, and other work required to satisfy manufacturer's requirements.

2.5.1.2 Minimum Conductor Sizes

Minimum size for branch circuits shall be No. 12 AWG.

2.5.2 Color Coding

Provide for service, feeder, branch, control, and signaling circuit conductors. Color shall be green for grounding conductors and white for neutrals; except where neutrals of more than one system are installed in same raceway or box, other neutral shall be white with colored (not green) stripe. Color of ungrounded conductors in different voltage systems shall be as follows:

a. 460 volt, 3-phase, 3 wire
   (1) Phase A - black
   (2) Phase B - red
   (3) Phase C - blue

b. 120 volt, single phase: red and white

2.5.3 Insulation

Unless specified or indicated otherwise or required by NFPA 70, power and lighting wires shall be 600-volt, Type THWN/THHN. Conductors shall conform to UL 83.

2.5.4 Bonding Conductors

ASTM B 1, solid bare copper wire for sizes No. 8 AWG and smaller diameter; ASTM B 8, Class B, stranded bare copper wire for sizes No. 6 AWG and larger diameter.

2.6 SPLICES AND TERMINATION COMPONENTS

UL 486A and UL 486B, as applicable, for wire connectors and UL 510 for insulating tapes. Connectors for No. 10 AWG and smaller diameter wires shall be insulated, pressure-type in accordance with UL 486A or UL 486C (twist-on splicing connector). Provide solderless terminal lugs on stranded conductors.

2.7 DEVICE PLATES

Provide UL listed, one-piece device plates for outlets to suit the devices installed. For metal outlet boxes, plates on unfinished walls shall be of cast metal having round or beveled edges. Plates installed in wet locations shall be gasketed and UL listed for "wet locations."

2.8 SWITCHES

2.8.1 Disconnect Switches

NEMA KS 1. Provide heavy duty-type switches where indicated, where switches are rated higher than 208 volts, and for double-throw switches. Fused switches shall utilize Class R fuse holders and Class R, time delay fuses, unless indicated otherwise. Switches serving as motor-disconnect means shall be horsepower rated. Provide switches in classified area to meet Class I, Division II, Group D Codes. Switches outdoor shall be in 3R enclosure.

2.9 RECEPTACLES

UL 498 and NEMA WD 1, general grade, heavy-duty, grounding type. Ratings and configurations shall be as indicated. Bodies shall be of brown ivory thermosetting plastic supported on a metal mounting strap. Dimensional requirements shall be per NEMA WD 6. Wiring terminals shall be screw-type, side-wiring terminals. Connect grounding pole to mounting strap.

2.9.1 Duplex Receptacles

Duplex receptacles shall be 15 amperes, 125 volts.

2.9.2 Weatherproof Receptacles

Provide in cast metal box with gasketed, weatherproof, cast-metal cover plate and gasketed cap over each receptacle opening. Provide caps with a spring-hinged flap. Receptacle shall be UL listed for use in "wet locations."

2.9.3 Ground-Fault Circuit Interrupter (GFCI) Receptacles

UL 943, duplex type for mounting in standard outlet box. Device shall be capable of detecting current leak of 6 milliamperes or greater and tripping per requirements of UL 943 for Class A GFCI devices.

2.10 PANELBOARDS

UL 67 and UL 50 having a short-circuit current rating as indicated. Panelboards for use as service disconnecting means shall additionally conform to UL 869. Panelboards shall be circuit breaker-equipped. Design shall be such that individual breakers can be removed without disturbing adjacent units or without loosening or removing supplemental insulation supplied as means of obtaining clearances as required by UL. Use of "Subfeed Breakers" is not acceptable unless specifically indicated otherwise. Main breaker shall be "separately" mounted "above" or "below" branch breakers. Where "space only" is indicated, make provisions for future installation of breakers. Panelboard locks shall be keyed same. Directories shall indicate load served by each circuit in panelboard. Directories shall also indicate source of service to panelboard (e.g. Panel PA served form Panel MDP). Type directories and mount in holder behind transparent protective covering.

2.10.1 Panelboard Buses

Support bus bars on bases independent of circuit breakers. Main buses and back pans shall be designed so that breakers may be changed without machining, drilling, or tapping. Provide isolated neutral bus in each panel for connection of circuit neutral conductors. Provide separate ground bus identified as equipment grounding bus per UL 67 for connecting grounding conductors; bond to steel cabinet.

2.10.2 Circuit Breakers

UL 489, thermal magnetic-type having a minimum short-circuit current rating equal to the short-circuit current rating of the panelboard in which the circuit breaker shall be mounted. Breaker terminals shall be UL listed as suitable for type of conductor provided. Series rated circuit breakers and plug-in circuit breakers are unacceptable.

2.10.2.1 Multipole Breakers

Provide common trip-type with single operating handle. Breaker design shall be such that overload in one pole automatically causes all poles to open. Maintain phase sequence throughout each panel so that any three adjacent breaker poles are connected to Phases A, B, and C, respectively.

2.11 FUSES

NEMA FU 1. Provide complete set of fuses for each fusible switch panel and control circuit. Time-current characteristics curves of fuses serving motors or connected in series with circuit breakers shall be coordinated for proper operation. Fuses shall have voltage rating not less than circuit voltage.

2.11.1 Cartridge Fuses, Current Limiting Type (Class R)

UL 198E, Class RK-1. Associated fuseholders shall be Class R only.

2.12 TRANSFORMERS

NEMA ST 20, general purpose, dry-type, self-cooled, sealed. Provide transformers suitable for Class I, Division II, Group D atmospheres. Transformer shall have 220 degrees C insulation system for transformers 15 KVA and greater, and shall have 180 degrees C insulation for transformers rated 10 KVA and less, with temperature rise not exceeding 80 degrees C under full-rated load in maximum ambient of 40 degrees C. Transformer of 80 degrees C temperature rise shall be capable of carrying continuously 130 percent of nameplate KVA without exceeding insulation rating.

2.13 MOTORS

NEMA MG 1. Provide the size in terms of hp, or KVA, or full-load current, or a combination of these characteristics, and other characteristics of each motor as indicated or specified. Determine specific motor characteristics to ensure provision of correctly sized starters and overload heaters. Motors for operation on 208-volt, 3-phase circuits shall have terminal voltage rating of 200 volts. Motors shall be designed to operate at full capacity with voltage variation of plus or minus 10 percent of motor voltage rating. Provide motors in hazardous locations with classifications as indicated.

2.13.1 Motor Sizes

Provide size for duty to be performed, not exceeding the full-load nameplate current rating when driven equipment is operated at specified capacity under most severe conditions likely to be encountered. When motor size provided differs from size indicated or specified, make adjustments to wiring, disconnect devices, and branch circuit protection to accommodate equipment actually provided.

2.14 MOTOR CONTROLLERS

UL 508, NEMA ICS 1, and NEMA ICS 2. Controllers shall have thermal overload protection in each phase. Magnetic-type motor controllers shall have undervoltage protection when used with momentary-contact push-button stations or switches and shall have undervoltage release when used with maintained-contact push-button stations or switches. When used with pressure, float, or similar automatic-type or maintained-contact switch, controller shall have hand/off/automatic selector switch. Connections to selector switch shall be such that only normal automatic regulatory control devices are bypassed when switch is in "hand" position. Safety control devices, such as low and high pressure cutouts, high temperature cutouts, and motor overload protective devices, shall be connected in motor control circuit in "hand" and "automatic" positions. Control circuit connections to hand/off/automatic selector switch or to more than one automatic regulatory control device shall be made in accordance with indicated or manufacturer's approved wiring diagram. Selector switch shall have means for locking in any position. For each motor not in sight of controller or where controller disconnecting means is not in sight of motor location and driven machinery location, controller disconnecting means shall be capable of being locked in open position. As an alternative, provide a manually operated, lockable, nonfused switch which disconnects motor from supply source within sight of motor. Overload protective devices shall provide adequate protection to motor windings; be thermal inverse-time-limit type; and include manual reset-type push-button on outside of motor controller case. Cover of combination motor controllers and manual switch or circuit breaker shall be interlocked with operating handle of switch or circuit breaker so that cover cannot be opened unless handle of switch or circuit breaker is in "off" position. Provide controllers in hazardous locations with classifications as indicated.

2.14.1 Control Circuits

Control circuits shall have maximum voltage of 120 volts derived from a separate control source. Provide terminals and terminal boards. Provide separate control disconnect switch within controller. One secondary lead shall be fused; other shall be grounded.

2.14.2 Enclosures for motor controllers

NEMA ICS 6, NEMA 3R.

2.14.3 Pilot and indicating Lights

Provide transformer, resistor, or diode type.

2.14.4 Terminal Blocks

NEMA ICS 4.

2.15 GROUNDING AND BONDING EQUIPMENT

UL 467. Ground rods shall be sectional type, copper-clad steel, with minimum diameter of 3/4 inch and minimum length of 11 feet.

2.16 HAZARDOUS LOCATIONS

All electrical materials, equipment, and devices shall be specifically approved by Underwriters' Laboratories, Inc., or Factory Mutual for "Class I," "Division II," and "Group D" hazardous locations.

2.17 NAMEPLATES

FS L-P-387. Provide as specified in Section 16011, "Electrical General Requirements."

PART 3 EXECUTION

3.1 INSTALLATION

Electrical installations shall conform to requirements of NFPA 70 and to requirements specified herein.

3.1.1 Underground Service

Underground service conductors and associated conduit shall be continuous from service entrance equipment to remote power system connection.

3.1.2 Hazardous Locations

Work in hazardous locations as defined by NFPA 70, shall be performed in strict accordance with NFPA 70 for particular "Class," "Division," and "Group" of hazardous locations involved. Provide conduit and cable seals where required by NFPA 70. Conduit shall have tapered threads.

3.1.3 Service Entrance Identification

Service entrance disconnect devices, switches, or enclosures shall be labeled or identified as such.

3.1.3.1 Labels

Wherever work results in service entrance disconnect devices in more than one enclosure, as permitted by NFPA 70, each enclosure, new and existing, shall be labeled as one of several enclosures containing service entrance disconnect devices. Label, at minimum, shall indicate number of service disconnect devices housed by enclosure and shall indicate total number of enclosures that contain service disconnect devices. Provide laminated plastic labels conforming to paragraph entitled "Nameplates." Use lettering of at least 0.25 inch in height, and engrave on black-on-white matte finish. Service entrance disconnect devices more than one enclosure, shall be provided only as permitted by NFPA 70.

3.1.4 Wiring Methods

Provide insulated conductors installed in rigid steel conduit, except where specifically indicated or specified otherwise or required by NFPA 70 to be installed otherwise. Provide insulated, green equipment grounding conductor in feeder and branch circuits, including lighting circuits. Grounding conductor shall be separate from electrical system neutral conductor. Provide insulated, green equipment grounding conductor for circuit installed in conduit or raceways. Minimum conduit size shall be 1/2 inch in diameter for low voltage lighting and power circuits.

3.1.5 Conduit Installation

Conduit shall be installed exposed except where required to serve equipment installed on floor slabs. Install conduit parallel with or at right angles to ceilings, walls, and structural members where conduit will be visible after completion of project. Conduit runs on floor slab will be minimized.

3.1.5.1 Conduit Support

Support conduit by pipe straps, wall brackets, hangers, or ceiling trapeze. Fasten by wood screws to wood; by toggle bolts on hollow masonry units; by concrete inserts or expansion bolts on concrete or brick; and by machine screws, welded threaded studs, or spring-tension clamps on steel work. Threaded C-clamps may be used on rigid steel conduit only. Do not weld conduits or pipe straps to steel structures. Load applied to fasteners shall not exceed one-fourth proof test load. Supporting means shall not be shared between electrical raceways and mechanical piping or ducts.

3.1.5.2 Directional Changes in Conduit Runs

Make changes in direction of runs with symmetrical bends or cast-metal fittings. Make field-made bends and offsets with hickey or conduit-bending machine. Do not install crushed or deformed conduits. Avoid trapped conduits. Prevent plaster, dirt, or trash from lodging in conduits, boxes, fittings, and equipment during construction. Free clogged conduits of obstructions.

3.1.5.3 Pull Wire

Install pull wires in empty conduits. Pull wire shall be plastic having minimum 200-pound tensile strength. Leave minimum 36 inches of slack at each end of pull wire.

3.1.5.4 Locknuts and Bushings

Fasten conduits to sheet metal boxes and cabinets with two locknuts where required by NFPA 70, where insulated bushings are used, and where bushings cannot be brought into firm contact with the box; otherwise, use at least minimum single locknut and bushing. Locknuts shall have sharp edges for digging into wall of metal enclosures. Install bushings on ends of conduits, and provide insulating type where required by NFPA 70.

3.1.5.5 Flexible Connections

Provide flexible fittings for equipment subject to vibration, noise transmission, or movement; and for motors. Provide separate ground conductor across flexible connections. Fittings shall be rated for use in hazardous (classified) locations.

3.1.5.6 Service Entrance Conduit, Overhead

Rigid steel from meter to service entrance fitting or weatherhead on pole.

3.1.5.6 Service Entrance Conduit, Underground

PVC, Type-EPC 40. Underground portion shall be installed at a minimum of 18 inches below slab or grade. Buried utility warning and identification type will be installed to an approximate depth of 12 inches below slab or grade.

3.1.6 Boxes, Outlets and Supports

Provide boxes in wiring and raceway systems wherever required for pulling of wires, making connections, and mounting of devices or fixtures. Boxes for metallic raceways shall be cast-metal, hub-type when located in wet locations, when surface mounted on outside of exterior surfaces, when installed exposed up to 7 feet above interior floors and walkways, and when specifically indicated. Each box shall have volume required by NFPA 70 for number of conductors enclosed in box. Provide gaskets for cast-metal boxes installed in wet locations and boxes installed flush with outside of exterior surfaces. Fasten boxes and supports with wood screws to wood; with toggle bolts on hollow masonry units; with bolts and expansion shields on concrete or brick; and with machine screws or welded studs on steel. In open overhead spaces, cast boxes threaded to raceways need not be separately supported except where used for fixture support. Support sheet metal boxes directly from building structure or by bar hangers. Where bar hangers are used, attach bar to raceways on opposite sides of box, and support raceway with approved-type fastener maximum 24 inches from box. When penetrating reinforced concrete members, avoid cutting reinforcing steel.

3.1.6.1 Boxes

Boxes for use with raceway systems shall be minimum 1 1/2 inches deep.

3.1.7 Mounting Heights

Mount panelboards, enclosed circuit breakers, motor controllers, and disconnecting switches so height of operating mechanism at its highest position is maximum 78 inches above floor. Mount lighting switches 48 inches above finished floor, receptacles 48 inches above finished floor, and other devices as indicated. Measure mounting heights of wiring devices and outlets to center of device or outlet.

3.1.8 Conductor Identification

Provide conductor identification within each enclosure where tap, splice, or termination is made. For conductors No. 6 AWG and smaller diameter, color coding shall be factory-applied, color-impregnated insulation. For conductors No. 4 AWG and larger diameter, by color coding shall be by plastic-coated, self-sticking markers; colored nylon cable ties and plates; or heat shrink-type sleeves.

3.1.9 Splices

Make splices in accessible locations. Make splices in conductors No. 10 AWG and smaller diameter with insulated, pressure-type connector. Make splices in conductors No. 8 AWG and larger diameter with solderless connector, and cover with insulation material equivalent to conductor insulation.

3.1.10 Covers and Device Plates

Install plates with alignment tolerance of 1/16 inch. Provide gasket for plates installed in wet locations.

3.1.11 Grounding and Bonding

In accordance with NFPA 70. Ground exposed, non-current-carrying metallic parts of electrical equipment, metallic raceway systems, grounding conductor in metallic raceways, and neutral conductor of wiring systems.

3.1.12 Equipment Connections

Provide power wiring for the connection of equipment under this section of the specification.

3.1.12.1 Workmanship

Lay out work in advance. Exercise care where cutting, channeling, chasing, or drilling of floors, walls, partitions, ceilings, or other surfaces is necessary for proper installation, support, or anchorage of conduit, raceways, or other electrical work. Repair damage to buildings, piping, and equipment using skilled craftsmen of trades involved.

3.2 FIELD QUALITY CONTROL

Furnish test equipment and personnel and submit written copies of test results.

3.2.1 Devices subject to Manual Operation

Each device subject to manual operation shall be operated at least five times, demonstrating satisfactory operation each time.

3.2.2 600-Volt Wiring Test

Test wiring rated 600 volts and less to verify that no short circuits or accidental grounds exist. Perform insulation resistance tests on wiring No. 6 AWG and larger diameter using instrument which applies voltage of approximately 500 volts to provide direct reading of resistance. Minimum resistance shall be 250,000 ohms.

3.2.3 GFCI Receptacle Test

Test GFCI receptacles with a "load" (such as a plug in light) to verify that the "line" and "load" leads are not reversed.

-- End of Section --