6/1/07 - 04002

FINAL

Site Investigation Report

Site 95 – Operable Unit No. 22
Historical Livestock Dipping Vats

Marine Corps Base Camp Lejeune
Jacksonville, North Carolina

Prepared for

Department of the Navy
Naval Facilities Engineering Command
Mid-Atlantic Division
Norfolk, Virginia

Contract No.
N62470-02-D-3052
CTO-0105
Navy Clean III

June 2007

Prepared by

CH2MHILL

FINAL

Site Investigation Report
Site 95 – Operable Unit No. 22
Historical Livestock Dipping Vats

Marine Corps Base Camp Lejeune
Jacksonville, North Carolina

Prepared for

Department of the Navy
Atlantic Division
Naval Facilities Engineering Command
Norfolk, Virginia

Under the
LANTDIV CLEAN III Program
Contract N62470-02-D-3052
Contract Task Order 0105

June 2007

Prepared by

CH2MHILL

Executive Summary

This Site Investigation (SI) report presents data, results, and conclusions of the investigations conducted at Site 95 at Marine Corps Base Camp Lejeune (Base) located in Jacksonville, North Carolina. The scope of work was provided by U.S. Navy, Naval Facilities Engineering Command (NAVFAC) - Mid Atlantic Division, Comprehensive Long-Term Environmental Action Navy (CLEAN) III, Contract N62470-02-D-3052, Contract Task Order (CTO) 0105 for submittal to NAVFAC - Mid Atlantic. Field investigations were conducted in general accordance with the *Site Investigation Work Plan, Site 95 Operable Unit 22 Historic Livestock Dipping Vats* dated February 2006 (Work Plan). The Work Plan was approved by NAVFAC, MCB Camp Lejeune Installation and Environment Department - Environmental Management Division, the U.S. Environmental Protection Agency (EPA), and the North Carolina Department of Environmental and Natural Resources (NCDENR).

Site 95 was investigated as part of the strategy and technical approach for Comprehensive Environmental Response, Compensation and Liability Act (CERCLA) Site Investigation (SI) under the Installation Restoration (IR) program at Operable Unit (OU) 22, Site 95 - Historic Livestock Dipping Vats at Marine Corps Base (MCB) Camp Lejeune, North Carolina. The primary objective of the SI is to characterize potential contamination and sources at the site and to evaluate whether additional investigation and/or remediation activities are necessary.

Analytical results from the field investigations were compared to Base background concentrations, North Carolina Groundwater Quality Standards (NCGWQS), EPA Region 9 Residential Preliminary Remediation Goals (PRGs) (based on a 1 in 1,000,000 (10^{-6}) cancer risk), upper bounds of the acceptable cancer risks based on the Residential PRGs assuming and a 1 in 10,000 (10^{-4}) cancer risk and North Carolina Soil Screening Levels (SSLs), as appropriate, to assess potential site-related releases. Human health risk screening (HHRS) was conducted for each of the sites to refine the evaluation of potential risk to human health. Brief site summaries, field investigation activities, data evaluation results, and recommendations are provided below.

Site 95

The federal government required the use of dipping vats during the period of 1906 through 1961 in the southern United States in an effort to control cattle tick fever. Prior to 1940, an arsenic solution was mandated for use in the vats. After 1940, some states also allowed the use of dichlorodiphenyltrichloroethane (DDT) and chlordane. Various petroleum products were used as carriers for the pesticides. The dipping vats were approximately 25 to 30 feet long, 4 to 5 feet deep, and 2.5 to 3.5 feet wide, each able to hold approximately 1,500 to 2,000 gallons of dipping solution. A drip pad, approximately 12-feet by 15-feet, was constructed at the exit of each vat. Holding pens, approximately 50-feet by 50-feet, were also associated with the dipping vats (Clark, 1997).

Operable Unit No. 22, Site 95 consists of three separate sites, with one known animal dipping vat at each location. The dipping vats are identified by their locations (Jaybird Road, Magnolia Road, and Lyman Road). The vats were initially identified during an archaeological investigation of the Base. The sites are located in undeveloped wooded areas.

Initial assessment of the Jaybird and Magnolia Road locations indicated exceedances of regulatory criteria for metals and thereby required additional assessment. The third location, Lyman Road, was located following this initial investigation. Based on the results of the assessments at Jaybird Road and Magnolia Road locations, additional assessment at the Lyman Road location was proposed.

Jaybird Road

Site 95 – Jaybird Road is located approximately 1.6 miles from the eastern bank of the New River and 600 feet south of Frenchs Creek, a tributary to the New River. It is located off of an unpaved road north of Jaybird Road in a previously heavily wooded area that was cleared for sampling purposes.

Three shallow monitoring wells were installed in February 2006 to depths of approximately 15 feet below ground surface (bgs). One monitoring well was installed toward the entrance to the dipping vat, one at the exit of the dipping vat, and one downgradient (assumed) of the dipping vat location. Groundwater samples were collected from the three monitoring wells and analyzed for volatile organic compounds (VOCs), semi-volatile organic compounds (SVOCs), polychlorinated biphenyls (PCBs), natural attenuation indicator parameters (NAIPs), target analyte list (TAL) metals, and pesticides.

One VOC (bromoform) was detected in the groundwater samples collected at Site 95-Jaybird Road at a concentration exceeding method detection limits (MDLs). Bromoform was detected in the groundwater sample collected from monitoring well IR95A-MW06 at a concentration of 0.91 micrograms per liter (µg/L). VOCs were not detected at concentrations exceeding NCGWQS. SVOCs, pesticides, and PCBs were not detected in groundwater samples collected at Site 95-Jaybird Road at concentrations exceeding MDLs. Seven metals were detected in the groundwater samples at concentrations exceeding MDLs, but less than NCGWQS. Iron was detected in exceedance of the NCGWQS of 300 µg/L in groundwater samples collected from monitoring wells IR95A-MW04 and IR95A-MW05 at concentrations of 2,080 µg/L and 829 µg/L, respectively. However, these concentrations are below the Base background concentration of 16,245.5 µg/L.

A total of 24 direct push technology (DPT) borings were advanced at Site 95-Jaybird Road to define the horizontal and vertical extent of soil impacts. Surface soil samples (collected zero to one foot bgs) were collected from each boring location and a total of nine subsurface soil samples (collected three to four feet bgs) were collected and analyzed for VOCs, SVOCs, PCBs, TAL metals, and pesticides.

In surface soil samples, VOCs, PCBs, and pesticides were not detected at concentrations exceeding screening criteria. The SVOC 4-methylphenol was detected in surface soil at a concentration above screening criteria, exceeding the SSL in the sample collected from

location IR95A-IS114. Arsenic concentrations detected in surface soil exceed the Residential PRG in 14 locations. Arsenic was detected in seven of these locations above the Base background concentrations, but below the acceptable 10^{-4} cancer risk. Iron concentrations exceed the SSL in surface soil samples collected from 23 locations, but only exceed the Base background concentration once, in the sample collected from IR95A-IS113. Similarly, mercury concentrations detected in surface soil exceed the SSL in samples collected from six locations, but the Base background concentration is only exceeded at IR95A-IS113.

VOCs, SVOCs, PCBs, and pesticides were not detected at concentrations above screening criteria in subsurface soil. Arsenic concentrations detected in subsurface soil samples exceed the Residential PRG in two locations; however, both are below the Base background concentration. Detected iron concentrations exceed the SSL in subsurface soil samples collected from seven locations, but remain below the Base background concentration.

The HHRS indicated that no unacceptable risks to humans exposed to constituents in groundwater, surface soil, or subsurface soil at Site 95-Jaybird Road were identified. Thus, no further action is recommended.

Magnolia Road

Site 95-Magnolia Road is located approximately 1,500 feet from the western bank of the New River. It is located off of an unpaved road that branches north of Magnolia Road in a previously heavily wooded area that was cleared for sampling purposes.

Three shallow monitoring wells were installed in July 2006 to depths of approximately 15 feet bgs. As with the other dipping vat locations, one monitoring well was installed toward the entrance to the dipping vat, one at the exit of the dipping vat, and one downgradient (assumed) of the dipping vat location. Groundwater samples were collected from the three monitoring wells and analyzed for VOCs, SVOCs, PCBs, NAIPs, TAL metals, and pesticides.

VOCs, SVOCs, and PCBs were not detected at concentrations exceeding MDLs in the groundwater samples for Site 95-Magnolia Road. The pesticide delta-benzene hexachloride (BHC) was detected in a groundwater sample collected from monitoring well IR95B-MW01 at a concentration exceeding MDLs, but was not in exceedance of the NCGWQS. Seven metals were detected in the groundwater samples at concentrations exceeding MDLs, but less than NCGWQS. Iron was detected at a concentration in exceedance of the NCGWQS in the groundwater sample collected from monitoring well IR95B-MW01; however, this concentration is below the Base background concentration.

A total of 31 DPT borings were advanced at Site 95-Magnolia Road. Surface soil samples were collected at each boring location and a total of 17 subsurface soil samples were collected and analyzed for VOCs, SVOCs, PCBs, TAL metals, and pesticides.

VOCs, SVOCs, pesticides, and PCBs were not detected at concentrations exceeding screening criteria in surface soil samples. Arsenic concentrations detected in surface soil exceed the Residential PRG and Base background concentrations in surface soil samples collected from 17 locations and the SSL in surface soil samples collected from 9 locations, with a maximum concentration of 188 milligrams per kilogram (mg/kg) in the sample

collected from IR95B-IS115. Arsenic concentrations in surface soil samples exceed the acceptable 10^{-4} cancer risk in three of these locations. Detected iron concentrations exceed the Residential PRG in surface soil samples collected from 31 locations, but the Base background concentration was exceeded in surface soil samples collected from only one of these locations, IR95B-IS101, at a concentration of 6,690 mg/kg. Iron concentrations detected in surface soil samples do not exceed the 10^{-4} cancer risk. Manganese and zinc are both detected at concentrations in exceedance of the Residential PRGs and Base background concentrations in surface soil samples collected from one location each. Manganese is detected at a concentration of 82.6 mg/kg in the sample collected from IR95B-IS128 and zinc is detected at a concentration of 957 mg/kg in the sample collected from IR95B-IS103. Neither manganese nor zinc concentrations detected in surface soil samples exceed the 10^{-4} cancer risks at Site 95-Magnolia Road. Mercury is detected at concentrations in exceedance of the Residential PRG surface soil samples from 19 locations, but remains less than Base background concentrations.

In subsurface soil, VOCs, SVOCs, pesticides, and PCBs were not detected at concentrations in exceedance of screening criteria. Detected arsenic concentrations exceed the Residential PRG and the SSL in subsurface soil samples collected from 13 and 5 locations, respectively, with a maximum concentration of 436 mg/kg in the sample collected from IR95B-IS115. The Base background concentration is exceeded in five of these samples. Arsenic concentrations detected in subsurface soil samples exceed the 10^{-4} cancer risk in two of these locations. Iron is detected at concentrations exceeding the SSL in samples collected from 15 locations, but remains below the Base background concentration. The mercury SSL is exceeded in the surface soil sample collected in one location, IR95B-IS109; however, the detected mercury concentration is less than the Base background concentration.

The HHRS indicated that no COPCs were identified for Site 95-Magnolia Road groundwater. The maximum detected concentration of the metal arsenic in surface soil was in exceedance of the acceptable range of cancer risk; therefore, this metal is identified as a COPC for Site 95-Magnolia Road surface soil. The maximum detected concentration of arsenic also exceeds the acceptable range of cancer risk in subsurface soil and is, therefore, also identified as a COPC for Site 95-Magnolia Road subsurface soil.

Based on the results of the SI, arsenic concentrations in surface soil and subsurface soil at Site 95-Magnolia Road have been identified with the potential to pose unacceptable risks to human health. Thus, a removal action is recommended. It is recommended that concrete structure and soils exceeding the acceptable cancer risk should be excavated and disposed of off-site at a permitted facility. Based on the results of soil analytical data collected during the SI, the estimated volume of soil to be excavated and is 370 cubic yards.

No unacceptable risks to humans exposed to constituents in groundwater at Site 95-Magnolia Road were identified.

Lyman Road

Site 95-Lyman Road is located on the northwest side of an unpaved road that branches to the north of Lyman Road approximately 2,600 feet west of State Route 172. The area was heavily wooded, but was cleared for sampling purposes.

Three shallow monitoring wells were installed in February 2006 to depths of approximately 15 feet bgs. As with the other dipping vat locations, one monitoring well was installed toward the entrance to the dipping vat, one at the exit of the dipping vat, and one downgradient (assumed) of the dipping vat location. Groundwater samples were collected from the three monitoring wells and analyzed for VOCs, SVOCs, PCBs, NAIPs, TAL metals, and pesticides.

One VOC (chloroform) was detected in the groundwater samples collected at Site 95-Lyman Road at concentrations exceeding MDLs; however, concentrations were below the NCGWQS. SVOCs, pesticides, and PCBs were not detected in the Site 95-Lyman Road groundwater samples at concentrations exceeding MDLs. Six metals were detected in the groundwater samples at concentrations exceeding MDLs; however, none exceeded the NCGWQS.

A total of 28 DPT borings were advanced at Site 95-Lyman Road. Surface soil samples were collected at each boring location and a total of 16 subsurface soil samples were collected and analyzed for VOCs, SVOCs, PCBs, TAL metals, and pesticides.

VOCs, pesticides, and PCBs were not detected at concentrations exceeding screening criteria in surface soil samples collected from Site 95-Lyman Road. The benzo(a)pyrene Residential PRG and SSL are exceeded in the sample collected from IR95C-IS123, with a concentration of 530 micrograms per kilogram (µg/kg). The detected concentration of benzo(a)pyrene does not exceed the acceptable 10^{-4} cancer risk. The benzo(b)fluoranthene SSL is exceeded in the sample collected from IR95C-IS123, at a concentration of 680 µg/kg. Arsenic concentrations detected in surface soil exceed the Residential PRG in five locations and the SSL in two locations, with a maximum concentration of 15.4 mg/kg at IR95C-IS102. The Base background concentration was exceeded in five of these samples. Arsenic was not detected at concentrations above the acceptable 10^{-4} cancer risk in any surface soil sample collected at Site 95-Lyman Road. Iron concentrations detected in surface soil at Site 95-Lyman Road exceed the SSL in 28 locations, but exceed the Base background concentration in only one of these locations, IR95C-IS121. Mercury concentrations detected in surface soil exceed the SSL in 12 locations, but exceed the Base background concentration in only one of these locations, IR95C-IS126. Manganese exceeds the SSL and Base background concentrations in surface soil samples collected from two locations, IR95C-IS117 and IR95C-IS122.

In subsurface soil, VOCs, SVOCs, pesticides, and PCBs were not detected at concentrations exceeding screening criteria. Arsenic concentrations exceed the Residential PRG in subsurface soil samples collected from six locations, but were not detected at concentrations above Base background concentrations. Detected iron and mercury concentrations also exceed the SSLs; however, these metals were not detected at concentrations above Base background concentrations in subsurface soil samples collected from Site 95-Lyman Road.

The HHRS indicated that no unacceptable risks to humans exposed to constituents in groundwater, surface soil, or subsurface soil at Site 95-Lyman Road were identified. Thus, no further action is recommended.

Contents

1.0 Introduction 1-1
1.1 Objectives and Approach 1-1
1.2 Report Organization 1-2
2.0 Site History and Physical Characteristics 2-1
2.1 MCB Camp Lejeune Setting and History 2-1
2.2 Livestock Dipping Vat Description and History 2-1
2.3 Previous Investigations 2-2
2.4 Physical Setting and Regional Hydrogeology 2-2
2.4.1 Regional and Facility-wide Physiography, Climate, and Surface Water Hydrology 2-2
2.4.2 General Regional Geologic and Hydrogeologic Framework 2-3
3.0 Field Investigation Activities and Data Evaluation 3-1
3.1 Field Investigation Activities 3-1
3.2 Data Evaluation 3-1
3.2.1 Data Tracking and Validation 3-1
3.2.2 Data Qualifiers 3-2
3.2.3 Evaluation of Non-Site-Related Analytical Results 3-2
3.2.4 Data Evaluation 3-3
3.3 Screening Characterization 3-4
3.3.1 Human Health Risk Screening (HHRS) 3-4
4.0 Site 95 – Jaybird Road 4-1
4.1 Site Background 4-1
4.2 Previous Investigations 4-1
4.3 Site Investigation Activities 4-1
4.3.1 Monitoring Well Installation and Development 4-1
4.3.2 Geotechnical Analysis 4-2
4.3.3 Groundwater Sampling 4-2
4.3.4 Direct Push Technology Boring (Soil Sampling) 4-3
4.4 Site 95-Jaybird Road Soil and Hydrogeology 4-3
4.4.1 Lithologic Description 4-3
4.4.2 Groundwater Characteristics 4-3
4.5 Analytical Results 4-4
4.5.1 Groundwater 4-4
4.5.2 Surface Soil 4-4
4.5.3 Subsurface Soil 4-5
4.5.4 Geotechnical Test Results 4-5
4.6 Human Health Risk Screening (HHRS) 4-6
4.7 Conclusions 4-6
5.0 Site 95 – Magnolia Road 5-1
5.1 Site Background 5-1
5.2 Previous Investigations 5-1
5.3 Site Investigation Activities 5-1
5.3.1 Monitoring Well Installation and Development 5-1

5.3.2 Geotechnical Analysis 5-2
5.3.3 Groundwater Sampling 5-2
5.3.4 Direct Push Technology Boring (Soil Sampling) 5-3
5.4 Site 95-Magnolia Road Soil and Hydrogeology 5-3
5.4.1 Lithologic Description 5-3
5.4.2 Groundwater Characteristics 5-3
5.5 Analytical Results 5-4
5.5.1 Groundwater 5-4
5.5.2 Surface Soil 5-4
5.5.3 Subsurface Soil 5-5
5.5.4 Geotechnical Test Results 5-6
5.6 Human Health Risk Screening (HHRS) 5-6
5.7 Conclusions 5-6
6.0 Site 95 – Lyman Road 6-1
6.1 Site Background 6-1
6.2 Previous Investigations 6-1
6.3 Site Investigation Activities 6-1
6.3.1 Monitoring Well Installation and Development 6-1
6.3.2 Geotechnical Analysis 6-2
6.3.3 Groundwater Sampling 6-2
6.3.4 Direct Push Technology Boring (Soil Sampling) 6-3
6.4 Site 95-Lyman Road Soil and Hydrogeology 6-3
6.4.1 Lithologic Description 6-3
6.4.2 Groundwater Characteristics 6-3
6.5 Analytical Results 6-3
6.5.1 Groundwater 6-4
6.5.2 Surface Soil 6-4
6.5.3 Subsurface Soil 6-5
6.5.4 Geotechnical Test Results 6-5
6.6 Human Health Risk Screening (HHRS) 6-6
6.7 Conclusions 6-6
7.0 Recommendations 7-1
7.1 Jaybird Road 7-1
7.2 Magnolia Road 7-1
7.3 Lyman Road 7-1
8.0 References 8-1

Tables

2-1 Summary of Historical Soil Analytical Results – Historical Dipping Vats
2-2 Hydrostratigraphic Units of the North Carolina Coastal Plain

3-1 Site Investigation Sample Summary
3-2 Groundwater Elevation Data

4-1 Water Quality Parameters Collected During Monitoring Well Development at Jaybird Road
4-2 Water Quality Parameters Collected During Groundwater Sampling at Jaybird Road

4-3 Concentrations of VOCs, SVOCs, Pesticides, Metals, and Geochemical Parameters in Groundwater at Jaybird Road
4-4 Concentrations of VOCs, SVOCs, Pesticides, PCBs, and Metals in Surface Soil at Jaybird Road
4-5 Concentrations of VOCs, SVOCs, Pesticies, PCBs, and Metals in Subsurface Soil at Jaybird Road
4-6a Human Health Risk Screening Step 1 – Jaybird Road Groundwater
4-6b Human Health Risk Screening Step 1 – Jaybird Road Surface Soil
4-6c Human Health Risk Screening Step 1 – Jaybird Road Subsurface Soil

5-1 Water Quality Parameters Collected During Monitoring Well Development at Magnolia Road
5-2 Water Quality Parameters Collected During Groundwater Sampling at Magnolia Road
5-3 Concentrations of VOCs, SVOCs, Pesticides, Metals, and Geochemical Parameters in Groundwater at Magnolia Road
5-4 Concentrations of VOCs, SVOCs, Pesticides, PCBs, and Metals in Surface Soil at Magnolia Road
5-5 Concentrations of VOCs, SVOCs, Pesticies, PCBs, and Metals in Subsurface Soil at Magnolia Road
5-6a Human Health Risk Screening Step 1 – Magnolia Road Groundwater
5-6b Human Health Risk Screening Step 1 – Magnolia Road Surface Soil
5-6c Human Health Risk Screening Step 1 – Magnolia Road Subsurface Soil

6-1 Water Quality Parameters Collected During Monitoring Well Development at Lyman Road
6-2 Water Quality Parameters Collected During Groundwater Sampling at Lyman Road
6-3 Concentrations of VOCs, SVOCs, Pesticides, Metals, and Geochemical Parameters in Groundwater at Lyman Road
6-4 Concentrations of VOCs, SVOCs, Pesticides, PCBs, and Metals in Surface Soil at Lyman Road
6-5 Concentrations of VOCs, SVOCs, Pesticides, PCBs, and Metals in Subsurface Soil at Lyman Road
6-6a Human Health Risk Screening Step 1 – Lyman Road Groundwater
6-6b Human Health Risk Screening Step 1 – Lyman Road Surface Soil
6-6c Human Health Risk Screening Step 1 – Lyman Road Subsurface Soil

Figures

1-1 MCB Camp Lejeune Location Map
1-2 Site Location Map

2-1 Site 95-Jaybird Road Site Map
2-2 Site 95-Magnolia Road Site Map
2-3 Site 95-Lyman Road Site Map
2-4 Physiographic Provinces of Eastern North Carolina
2-5 Site 95-Jaybird Road Hydrologic Features
2-6 Site 95-Magnolia Road Hydrologic Features

2-7 Site 95-Lyman Road Hydrologic Features

4-1 Site 95-Jaybird Road Boring Locations
4-2 Site 95-Jaybird Road Groundwater Elevation Map
4-3 Site 95-Jaybird Road Surface Soil Arsenic Results

5-1 Site 95-Mangolia Road Boring Locations
5-2 Site 95-Magnolia Road Groundwater Elevation Map
5-3 Site 95-Magnolia Road Surface Soil Arsenic Results
5-4 Site 95-Magnolia Road Subsurface Soil Arsenic Results

6-1 Site 95-Lyman Road Boring Locations
6-2 Site 95-Lyman Road Groundwater Elevation Map
6-3 Site 95-Lyman Road Surface Soil Arsenic Results

Appendices

A Suspected Dipping Vat Sampling and Suspected Asbestos Shingle/Transit Board Sampling Report

B Analytical Results

- B-1 Jaybird Road
- B-2 Magnolia Road
- B-3 Lyman Road

C Background Background Concentrations

D Boring Logs and Well Construction Diagrams

- D-1 Jaybird Road
- D-2 Magnolia Road
- D-3 Lyman Road

E Groundwater Assessment Chain of Custody Forms

- E-1 Jaybird Road
- E-2 Magnolia Road
- E-3 Lyman Road

F Soil Assessment Chain of Custody Forms

- F-1 Jaybird Road
- F-2 Magnolia Road
- F-3 Lyman Road

G Geotechnical Analysis Results

- G-1 Jaybird Road
- G-2 Magnolia Road
- G-3 Lyman Road

Acronyms and Abbreviations

amsl	above mean sea level
Baker	Baker Environmental, Inc.
bgs	below ground surface
BHC	benzene hexachloride
CERCLA	Comprehensive Environmental Response, Compensation, and Liability Act
CLEAN	Comprehensive Long-Term Environmental Action – Navy
COC	chain-of-custody
COPCs	constituents/chemicals of potential concern
CTO	Contract Task Order
DDD	dichlorodiphenyldichloroethane
DDE	dichlorodiphenyldichloroethylene
DDT	dichlorodiphenyltrichloroethane
DO	dissolved oxygen
DoN	Department of the Navy
EC	electrical conductivity
ERS	ecological risk screening
°F	Fahrenheit
FFA	Federal Facilities Agreement
gpm	gallons per minute
HHRS	human health risk screening
IAS	Initial Assessment Study
ID	inside diameter
in.	inch/inches
kg	kilograms
LANTDIV	Atlantic Division
MCB	Marine Corps Base
mg/kg	milligrams per kilogram
MS/MSD	matrix spike/matrix spike duplicate
msl	mean sea level
NAIP	natural attenuation indicator parameter
NAVFAC	Naval Facilities Engineering Command
NCDENR	North Carolina Department of Environment and Natural Resources
NCGWQS	North Carolina Groundwater Quality Standards
NFA	no further action
NPL	National Priorities List

OE	ordnance/explosives
ORP	oxidation reduction potential
PCB	polychlorinated biphenyl
PQL	practical quantitation limit
PRG	Preliminary Remediation Goals
PVC	polyvinyl chloride
QA/QC	quality assurance/quality control
RBC	risk-based concentration
RCRA	Resource Conservation and Recovery Act
SI	Site Investigation
SSL	soil screening level
SOP	standard operating procedure
SVOC	semi-volatile organic compound
TAL	Target Analyte List
USEPA	United States Environmental Protection Agency
μg/L	micrograms per liter
USCS	Unified Soil Classification System
UTL	upper tolerance limit
VOC	volatile organic compound

SECTION 1

Introduction

This Site Investigation (SI) report presents data, results, and conclusions of the investigations conducted at Site 95 located at Marine Corps Base (MCB) Camp Lejeune in Jacksonville, North Carolina. A regional location map of MCB Camp Lejeune and its surrounding area is provided as **Figure 1-1** and the site locations are shown on **Figure 1-2**.

This SI was conducted in response to the *Suspected Dipping Vat Sampling and Suspected Asbestos Shingle/Transit Board Sampling* at Magnolia Road and Jaybird Road completed by Baker Environmental, Inc. (Baker) in 2004, which indicated that pesticide and metal concentrations detected in soil exceeded regulatory criteria. The dipping vat at the Lyman Road site was discovered at a later date and, as it was used for similar purposes, assessment was proposed. The primary objective of the SI is to characterize potential contamination at the site and to evaluate whether additional investigation and/or remediation activities are necessary. This SI was conducted in accordance with the *Site Investigation Work Plan, Site 95 – Operable Unit No. 22, Historic Livestock Dipping Vats, Marine Corps Base Camp Lejeune, North Carolina* by CH2M HILL dated February 2006.

This SI was prepared by CH2M HILL under the Naval Facilities Engineering Command (NAVFAC) - Mid Atlantic, Comprehensive Long-Term Environmental Action Navy (CLEAN) III Contract N62470-02-D-3052, Contract Task Order (CTO) 105. This report is for submittal to NAVFAC - Mid Atlantic, MCB Camp Lejeune Installation and Environment Department - Environmental Management Division, the U.S. Environmental Protection Agency (USEPA), and the North Carolina Department of Environment and Natural Resources (NCDENR).

1.1 Objectives and Approach

The objectives of the SI are to:

- Collect information to supplement and/or verify the environmental setting at the Site, including hydrogeology, geology, hydrology, topography, and any other anthropogenic influences that may affect the hydrology or contaminant pathways at the site
- Determine whether soils, sediment, and/or groundwater have been or are being impacted by site-related releases at concentrations of potential concern;
- Perform risk characterization via screening of the historical and new analytical data against risk-based concentrations (RBCs)
- Assess whether remedial investigations or no further action are warranted for the sites and make recommendations accordingly.

1.2 Report Organization

The SI report comprises the following sections:

- Section 1 - Introduction
- Section 2 – Livestock Dipping Vat History and Physical Characteristics
- Section 3 - Field Investigation Activities and Data Evaluation
- Section 4 - Site 95-Jaybird Road
- Section 5 - Site 95-Magnolia Road
- Section 6 - Site 95-Lyman Road
- Section 7 - References

Figures and tables are provided at the end of each respective section and appendices are provided after Section 7.

Figures

\\Ariadne\groups\gis\USNavFaceNGCom\315007CampLejeune\Projects\Site95\Figure 1-1 - MCB Camp Lejeune Location Map.mxd

Legend

- Military Installation Area
- Limited Access Highway
- Highway
- Local Roads
- Cities

N
W E
S

0 4,500 9,000 13,500 18,000 Meters

Figure 1-1
MCB Camp Lejeune Location Map
Camp Lejeune, North Carolina

CH2MHILL

\\Aphrodite\proj\USNavFaceNGCom\315007CampLejeune\Projects\Site95\Figure 1-1 - Site Location Map.mxd

Legend

Livestock Dipping Vats

Installation Area

N
W E
S

7,000 0 7,000 Feet

Figure 1-2
Site Location Map
MCB Camp Lejeune
Camp Lejeune, North Carolina

CH2MHILL

SECTION 2

Site History and Physical Characteristics

2.1 MCB Camp Lejeune Setting and History

MCB Camp Lejeune is located on 236 square miles of land in Onslow County, North Carolina, adjacent to the southern side of the City of Jacksonville. Jacksonville is the largest city near the MCB Camp Lejeune and contains approximately half of the county's total population. Since 1990, much of the MCB Camp Lejeune complex has been part of Jacksonville. The areas adjacent to the Base are generally rural.

The New River, which flows into the Atlantic Ocean in a southeasterly direction, bisects the Base. The MCB is bordered by the Atlantic Ocean to the east, U.S. Route 17 to the west and State Route 24 to the north. **Figure 1-1** shows the location of MCB Camp Lejeune.

Camp Lejeune was placed on the Comprehensive Environmental Response, Compensation, and Liability Act of 1980 (CERCLA) National Priorities List (NPL) effective 4 November 1989. Subsequent to this listing, the EPA Region IV; NCDENR; the United States Department of the Navy (DoN); and the Marine Corps entered into a Federal Facilities Agreement (FFA) for Camp Lejeune. The primary purpose of the FFA was to ensure that environmental impacts associated with past and present activities at the Base are thoroughly investigated and that appropriate CERCLA response and Resource Conservation and Recovery Act (RCRA) corrective action alternatives are developed and implemented, as necessary, to protect public health and welfare and the environment.

2.2 Livestock Dipping Vat Description and History

In North Carolina, as well as in many other southern and mid-western states, livestock dipping vats were used to eradicate ticks that caused illness in cattle and other livestock. These vats were in operation from 1906 to 1962 (Thomas and Rhue, 1997). The dipping vats were approximately 25 to 30 feet long, 4 to 5 feet deep, and 2.5 to 3.5 feet wide. Each vat could hold approximately 1,500 to 2,000 gallons of dipping solution which usually contained 0.14 to 0.22 percent arsenic by weight (Thomas et al. 1999; Thomas and Rhue, 1997). A drip pad, approximately 12-feet by 15-feet, was constructed at the exit of each vat. Holding pens, approximately 50-feet by 50-feet, were also associated with the dipping vats. Water was needed to make the arsenical dipping solution; therefore, cattle dip vats were usually located next to a well or source of surface water (Clark, 1997).

Around the mid-1940s, experimentation with chlorinated pesticides as a replacement for arsenic was prevalent. This resulted in the soil around many dipping vats being contaminated with chemicals such as dichlorodiphenyltrichloroethane (DDT), dichlorodiphenyldichloroethylene (DDE), toxaphene, and benzene hexachloride (BHC), in addition to arsenic contamination (Thomas et al., 1999). Various petroleum products were used as carriers for the pesticides.

Operable Unit No. 22, Site 95 consists of three separate sites, with one known animal dipping vat at each location. The vats were initially identified during an archeological investigation of the Base. The exact date and duration of use for each vat at Site 95 is unknown. The sites are located in undeveloped wooded areas of the Base and identified by their locations (Jaybird Road, Magnolia Road, and Lyman Road). Detailed site maps for Site 95-Jaybird Road, Site 95-Magnolia Road, and Site 95-Lyman Road are shown on **Figures 2-1**, **2-2**, and **2-3**, respectively.

2.3 Previous Investigations

Initial assessment of two dipping vat sites (Magnolia Road and Jaybird Road) was performed by Baker and is documented in the report *Suspected Dipping Vat Sampling and Suspected Asbestos Shingle/Transit Board Sampling* (Baker, 2004). There has been no assessment of the third site, the Lyman Road dipping vat, which was located at a later date.

Soil samples collected by Baker were submitted to the laboratory and analyzed for pesticides and RCRA metals. Based on evaluation of the results, metals were detected in soil within the dipping vats at concentrations exceeding the regulatory driven criteria and established background/secondary criteria (for metals only). Constituents exceeding the regulatory standards for soils inside the vats included arsenic, chromium, and mercury. Analytical results of the sampling conducted by Baker are summarized in **Table 2-1**.

The *Suspected Dipping Vat Sampling and Suspected Asbestos Shingle/Transit Board Sampling* report indicated that the pesticides 4,4′-dichlorodiphenyldichloroethane (DDD), 4,4′-DDE, and 4,4′-DDT were detected at concentrations exceeding regulatory driven criteria in soil samples collected from the dipping vat at Site 95-Magnolia Road. Further review of the data by CH2M HILL revealed that the regulatory driven criteria were incorrectly reported and that pesticides were not detected at concentrations exceeding the criteria. A copy of the *Suspected Dipping Vat Sampling and Suspected Asbestos Shingle/Transit Board Sampling* report is included as **Appendix A**.

2.4 Physical Setting and Regional Hydrogeology

The following sections describe the physical characteristics of the region, MCB Camp Lejeune, and Site 95 in particular. The majority of the following sections is based on prior knowledge of conditions at the Base, but has been modified to incorporate the findings from SI field activities that are discussed in Sections 4 through 6.

2.4.1 Regional and Facility-wide Physiography, Climate, and Surface Water Hydrology

MCB Camp Lejeune is located on 236 square miles of land in Onslow County, North Carolina adjacent to the southern side of the City of Jacksonville. Jacksonville is the largest city near the Base and contains approximately half of the county's total population. Since 1990, much of the MCB Camp Lejeune complex has been part of Jacksonville. The areas adjacent to the Base are generally rural. The Base is bisected by the New River, which flows into the Atlantic Ocean in a southeasterly direction. The Base is bordered by the Atlantic

Ocean to the east, U.S. Route 17 to the west, and State Route 24 to the north. **Figure 1-1** shows the location of MCB Camp Lejeune.

The MCB Camp Lejeune facility lies within the outer part of the Atlantic Coastal Plain Physiographic Province in North Carolina, as shown on **Figure 2-4**. This physiographic province stretches from Georgia to Long Island, New York. The physiography of the area is typical of the Atlantic Coastal Plain with stepped terraces consisting of wide, gently eastward-sloping plains separated by linear, steeper, northward and eastward-facing scarps. The topography is characterized by low elevations and relatively low relief across MCB Camp Lejeune and the general vicinity of Site 95. The surface elevations range from sea level to approximately 70 feet above mean sea level (amsl) with most of MCB Camp Lejeune's elevation ranging from 20 to 40 feet above msl.

Mild winters and hot humid summers generally characterize climatic conditions within southeastern North Carolina and at MCB Camp Lejeune. Winters are usually short and mild with occasional short, cold periods. Summers are long, hot and humid. Average annual net precipitation is approximately 50 in. The average ambient air temperature is 63 degrees Fahrenheit (°F) (USDA, 2002).

The New River and its tributaries bisect MCB Camp Lejeune. The land at MCB Camp Lejeune generally slopes toward the New River with a grade of about 0.5 percent. The relief between stream and interstream areas typically ranges from 20 to 30 feet.

2.4.2 General Regional Geologic and Hydrogeologic Framework

Southeastern North Carolina and MCB Camp Lejeune are within the Tidewater region of the Atlantic Coastal Plain Physiographic Province. The Tidewater region is generally swampy and of low relief, with elevations averaging about 20 feet above msl. The MCB Camp Lejeune area is underlain by an eastward thickening sediment wedge of marine and non-marine origins ranging in age from early Cretaceous to Holocene. The eastward thickening wedge of sediment begins at the western boundary of Atlantic Coastal Plain physiographic province, known as the Fall Line, and dips southeastward towards the coast. Along the coastline, several thousands of feet of interlayered, unconsolidated sediment are present consisting of gravel, sand, silt, clay deposits, calcareous clays, shell beds, sandstone and limestone that was deposited over pre-Cretaceous crystalline basement rock. These sediment units are often distinguished by minor amounts of detrital carbonate shells, and secondary minerals such as glauconite, siderite, and chlorite (Cardinell et al., 1993). The hydrologic features of Site 95-Jaybird Road, Site 95-Magnolia Road, and Site 95-Lyman Road are shown on **Figures 2-5, 2-6,** and **2-7**, respectively.

Fluctuations in sea level on a subsiding continental margin in marine and near-shore environments are believed to have controlled Historical Coastal Plain sedimentation and deposition (Winner and Coble, 1989). Confining units associated with specific aquifers within the Coastal Plain region are composed of less permeable beds of clay and silt. Within the MCB Camp Lejeune area, approximately 1,500 feet of a sedimentary sequence overlie the crystalline basement rock. This sedimentary sequence composes seven aquifers and their associated confining units including the Surficial, Castle Hayne, Beaufort, Peedee, Black Creek, and Upper and Lower Cape Fear aquifers (Cardinell et al., 1993). Hydrostratigraphic units of the North Carolina Coastal Plain are contained in **Table 2-2.**

Interstream areas generally provide the recharge of aquifers within the Coastal Plain region. Recharge to the aquifers has been estimated to have a yearly range of five to 21 inches of rainfall (Heath, 1989). In general, natural discharge of groundwater from the Coastal Plain aquifer system is into streams, swamps, and lakes. Evapotranspiration from the soil zone and upward leakage through confining units into streams, estuaries, swamps, and even the ocean also contribute to groundwater discharge. The New River estuary serves as the principal discharge area for groundwater from the Castle Hayne aquifer within the vicinity of MCB Camp Lejeune (Harned et al., 1989).

Tables

TABLE 2-1
Summary of Historical Analytical Results - Historical Dipping Vats
MCB Camp Lejeune, North Carolina

SAMPLE ID	Region 9 PRGs	10^{-7} Cancer Risk	**NCDENR**	Base Background	Magnolia Road			Jaybird Road		
SAMPLE DATE	Residential	Concentration	**Soil to GW**		CDV01 04-01-2004	CDV02 04-01-2004	GDV-01 04-06-2004	GDV-02 04-06-2004	GDV-02D 04-06-2004
METALS (mg/kg)									
ARSENIC	0.39	39	5.24	0.879	565	457	21.6	5.6	5.6
BARIUM	5400	540,000	848	19.4	50 J	51.8 J	305	676	803
CADMIUM	37	3,700	2.72	--	1.3 J	1.7 J	0.49 U	1.3	0.76 J
CHROMIUM	30	3000	27.2	30.9	3.5 J	3.4 J	35.5	45.8	48.2
LEAD	400	40,000	270	25.8	142	155	75.6	99.2	119
MERCURY	23	2,300	0.0154	0.12	**0.55**	**0.79**	**0.26**	**0.03** J	**0.02** J
SILVER	390	39,000	0.223	0.372	0.65 U	0.89 U	0.23 U	0.28 U	0.28 J
TOTAL SOLIDS					19	13	75	73	73

NOTES:
J = Result is estimated
U = Not detected
Shading indicates exceedance of Region 9 Residential PRGs
Highlighting indicates exceedance of 10^{-7} Cancer Risk Concentration
Bold indicates exceedance of NCDENR Soil to GW
Underline indicates exceedance of Base Background

TABLE 2-2
Hydrostratigraphic Units of the North Carolina Coastal Plain
Operable Unit No. 22, Site 95
MCB Camp Lejeune, North Carolina

Geologic Units			Hydrogeologic Units
System	**Series**	**Formation**	**Aquifer and Confining Unit**
Quaternary	Holocene/Pleistocene	Undifferentiated	Surficial Aquifer
Tertiary	Miocene	Yorktown[1]	Yorktown confining unit
		Eastover[1]	Yorktown Aquifer
		Pungo River[1]	Pungo River confining unit
		Belgrade[2]	Pungo River Aquifer
	Oligocene	River Bend	Castle Hayne confining unit
			Castle Hayne Aquifer
			Beaufort confining unit[3]
			Beaufort Aquifer
	Eocene	Castle Hayne	Peedee Confining Unit
	Paleocene	Beaufort	
Cretaceous	Upper Cretaceous	Peedee	
		Black Creek and Middendorf	Black Creek confining unit
			Black Creek Aquifer
		Cape Fear	Upper Cape Fear confining unit
			Upper cape Fear Aquifer
			Lower Cape Fear confining unit
			Lower Cape Fear Aquifer
	Lower Cretaceous	Unnamed deposits[1]	Lower Cretaceous confining unit
			Lower Cretaceous
Pre-Cretaceous basement rocks			

Notes:

[1]Geologic and hydrologic units probably not present beneath MCB Camp Lejeune

[2]Constitutes part of the surficial aquifer and Castle Hayne confining unit in the study area.

[3]Estimated to be confined to deposits of Paleocene age in the study area.

Source: Harned et al., 1989.

Figures

\\aphrodite\projects\USNavFaceNGCom\315007CampLejeune\Projects\Site95\Figure2-1_Jaybird Road Site Map.mxd 3/1/07 munwin

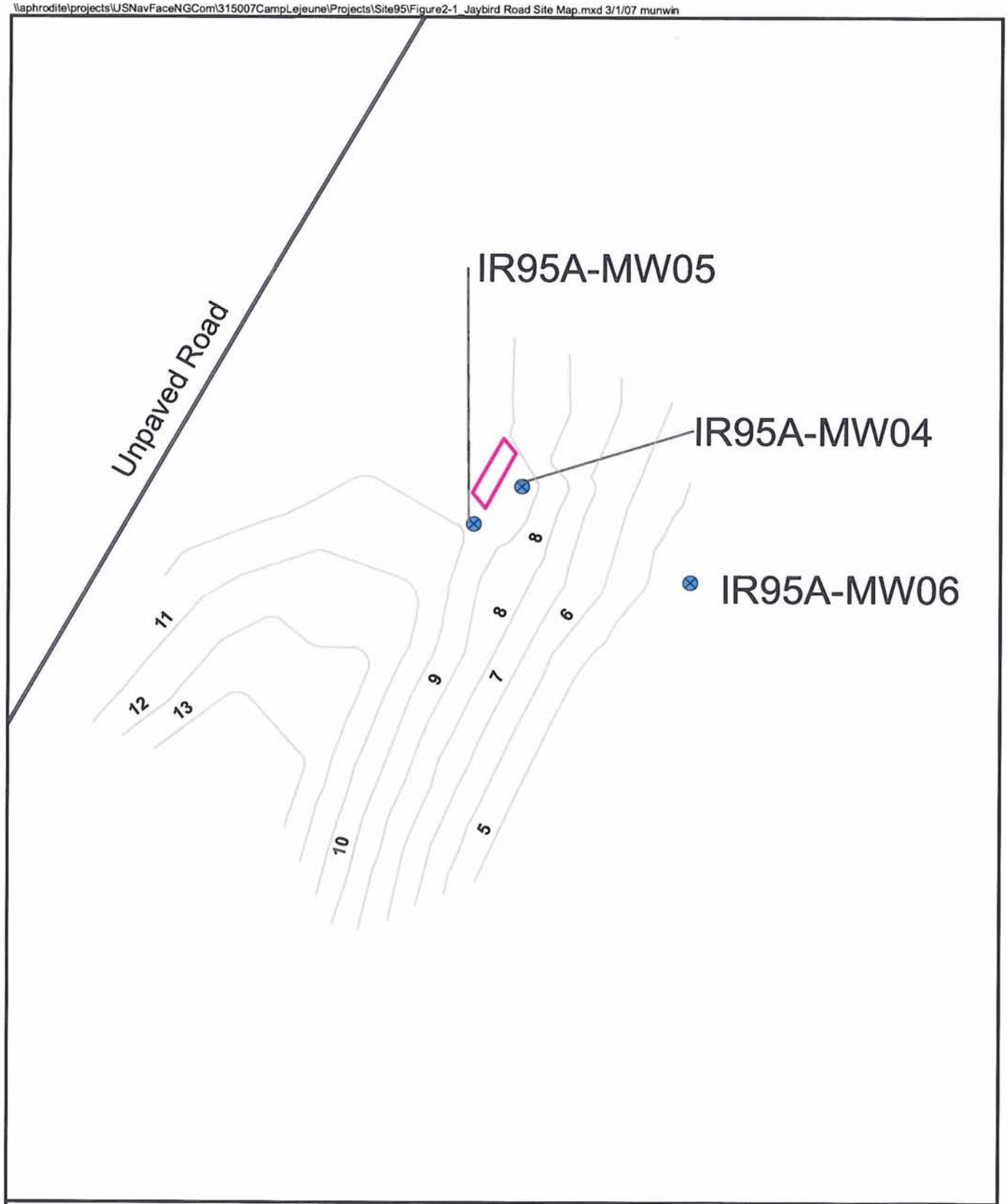

Legend
- Monitoring Wells
- Livestock Dipping Vat
- Surface Contours
- Road

N
W E
S

0 12.5 25
Feet

Figure 2-1
Site 95 - Jaybird Road Site Map
Site 95 Site Investigation
MCB Camp Lejeune, North Carolina

CH2MHILL

\\aphrodite\projects\USNavFaceNGCom\315007CampLejeune\Projects\Site95\Figure2-2_Magnolia Road Site Map.mxd 3/1/07 munwin

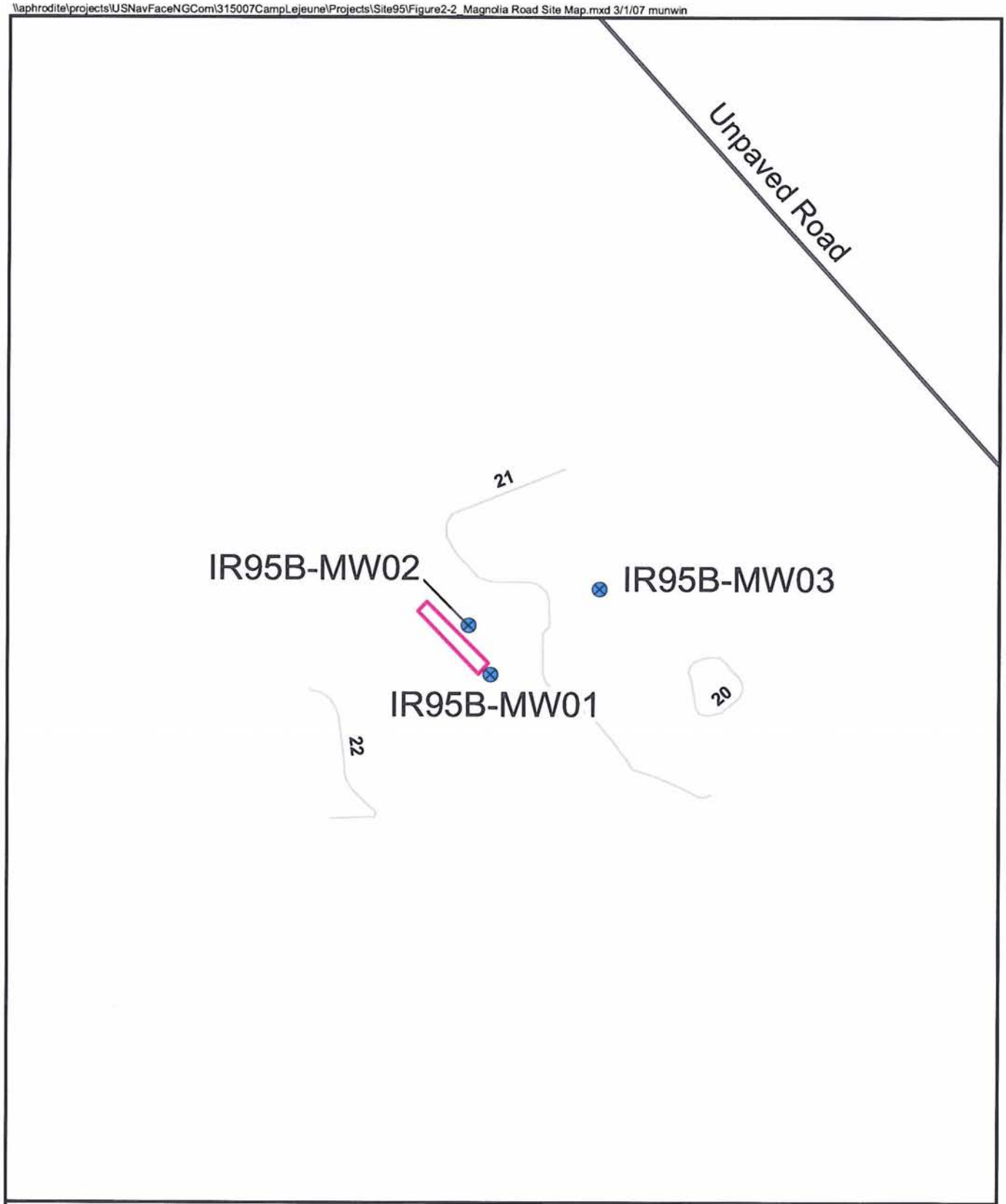

Legend

- Livestock Dipping Vat
- Monitoring Wells
- Surface Contours
- Road

N
W E
S

0 20 40
Feet

Figure 2-2
Site 95 - Magnolia Road Site Map
Site 95 Site Investigation
MCB Camp Lejeune, North Carolina

CH2MHILL

\\aphrodite\projects\USNavFaceNGCom\315007CampLejeune\Projects\Site95\Figure2-3_Lyman Road Site Map.mxd 3/1/07 munwin

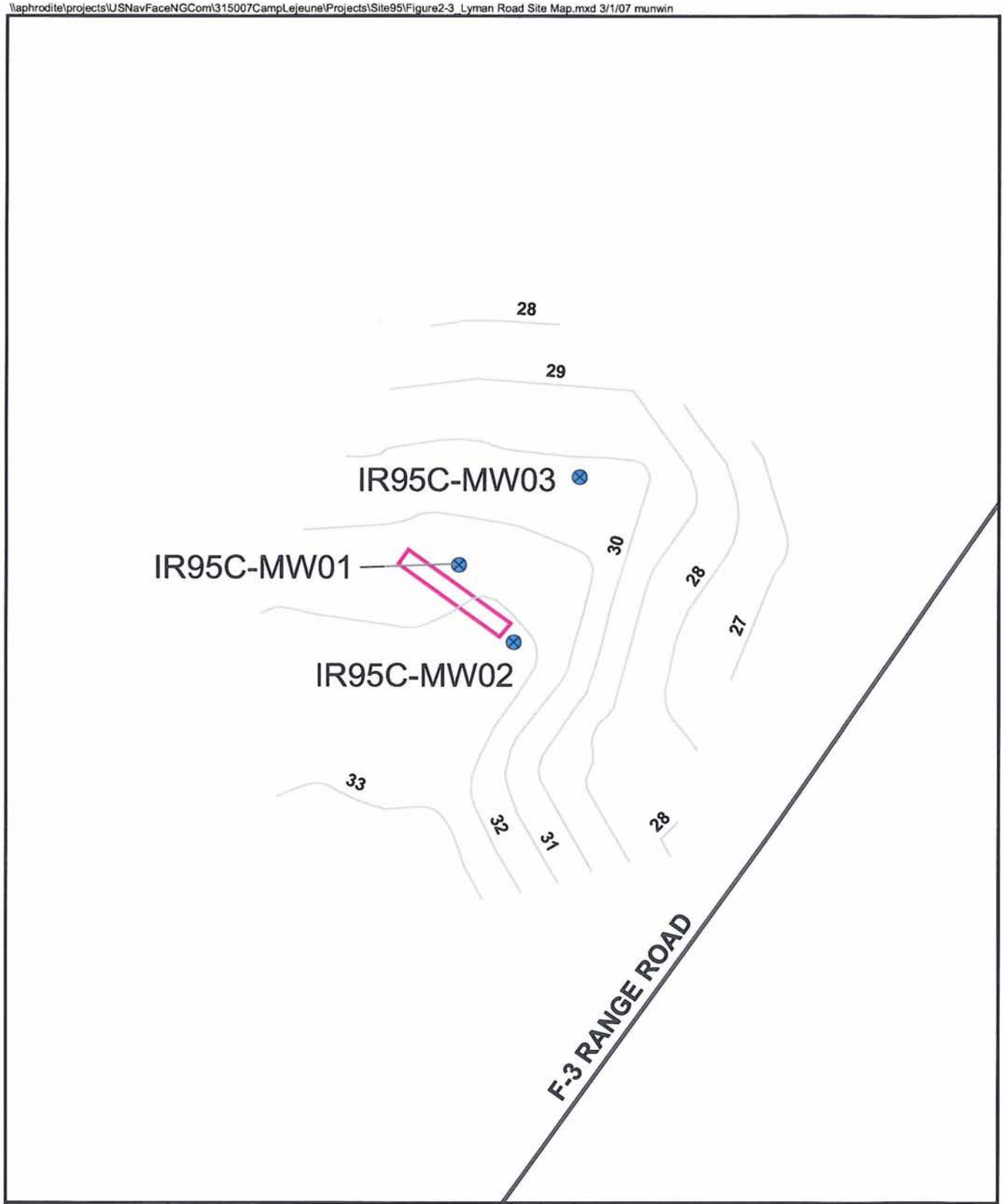

Legend

- Monitoring Wells
- Livestock Dipping Vat
- Surface Contours
- Road

N
W E
S

0 15 30
Feet

Figure 2-3
Site 95 - Lyman Road Site Map
Site 95 Site Investigation
MCB Camp Lejeune, North Carolina

CH2MHILL

Source: USGS Report by Cardinell, A.P., S.A. Berg, and O.B. Lloyd, Jr. (1993)

Figure 2-4
Physiographic Provinces of Eastern North Carolina
Operable Unit No. 22 (Site 95)
Site Investigation
MCB Camp Lejeune, North Carolina

CH2MHILL

\\ariadne\groups\gis\USNavFaceNGCom\315007CampLejeune\Projects\Site95\Figure 2-5 Jaybird Road Hydrologic Features.mxd

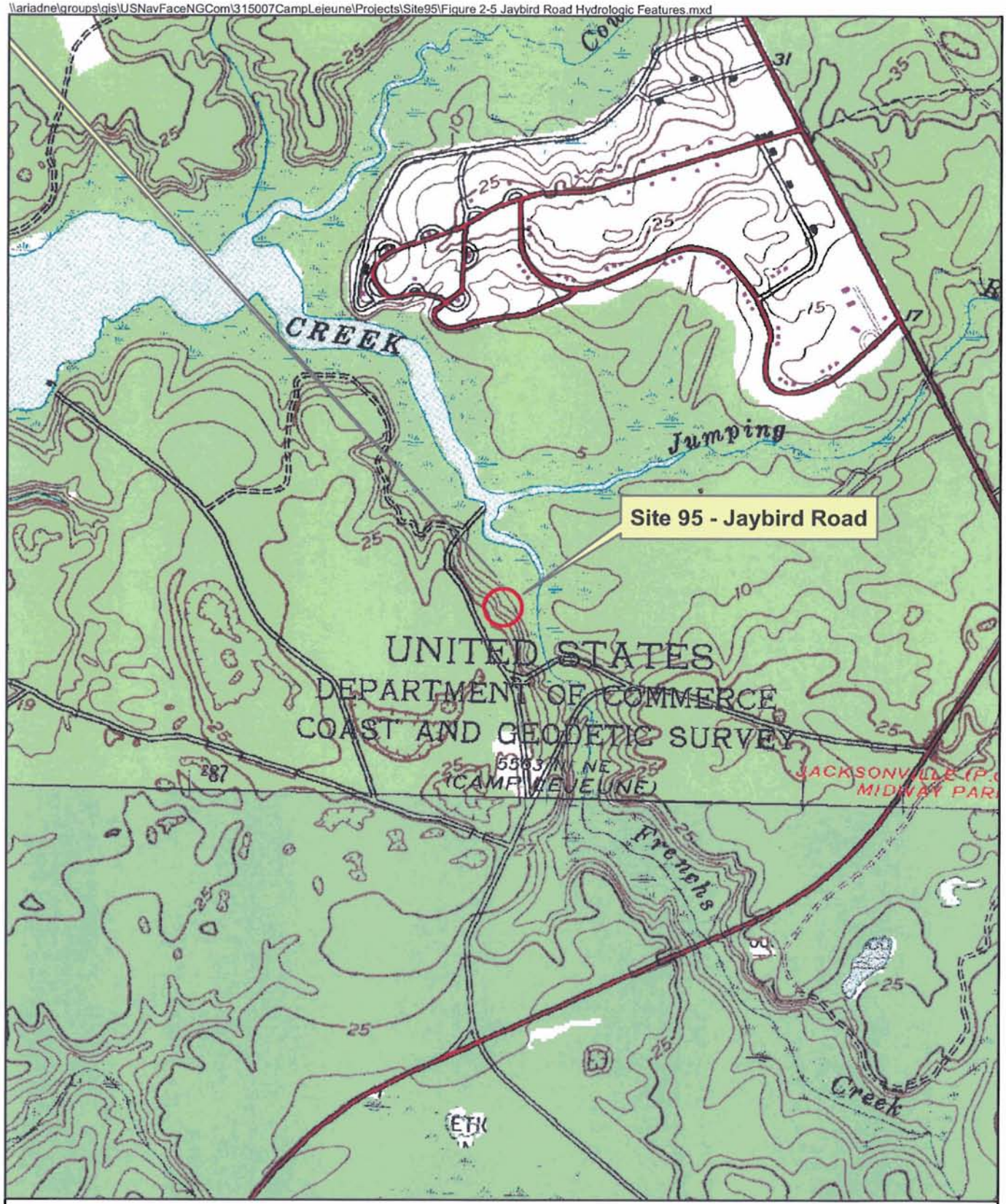

N

0 625 1,250
Feet

Figure 2-5
Site 95 - Jaybird Road Hydrologic Features
Site 95 - Site Investigation
MCB Camp Lejeune, North Carolina

CH2MHILL

\\ariadne\groups\gis\USNavFaceNGCom\315007CampLejeune\Projects\Site95\Figure 2-6 Magnolia Road Hydrologic Features.mxd

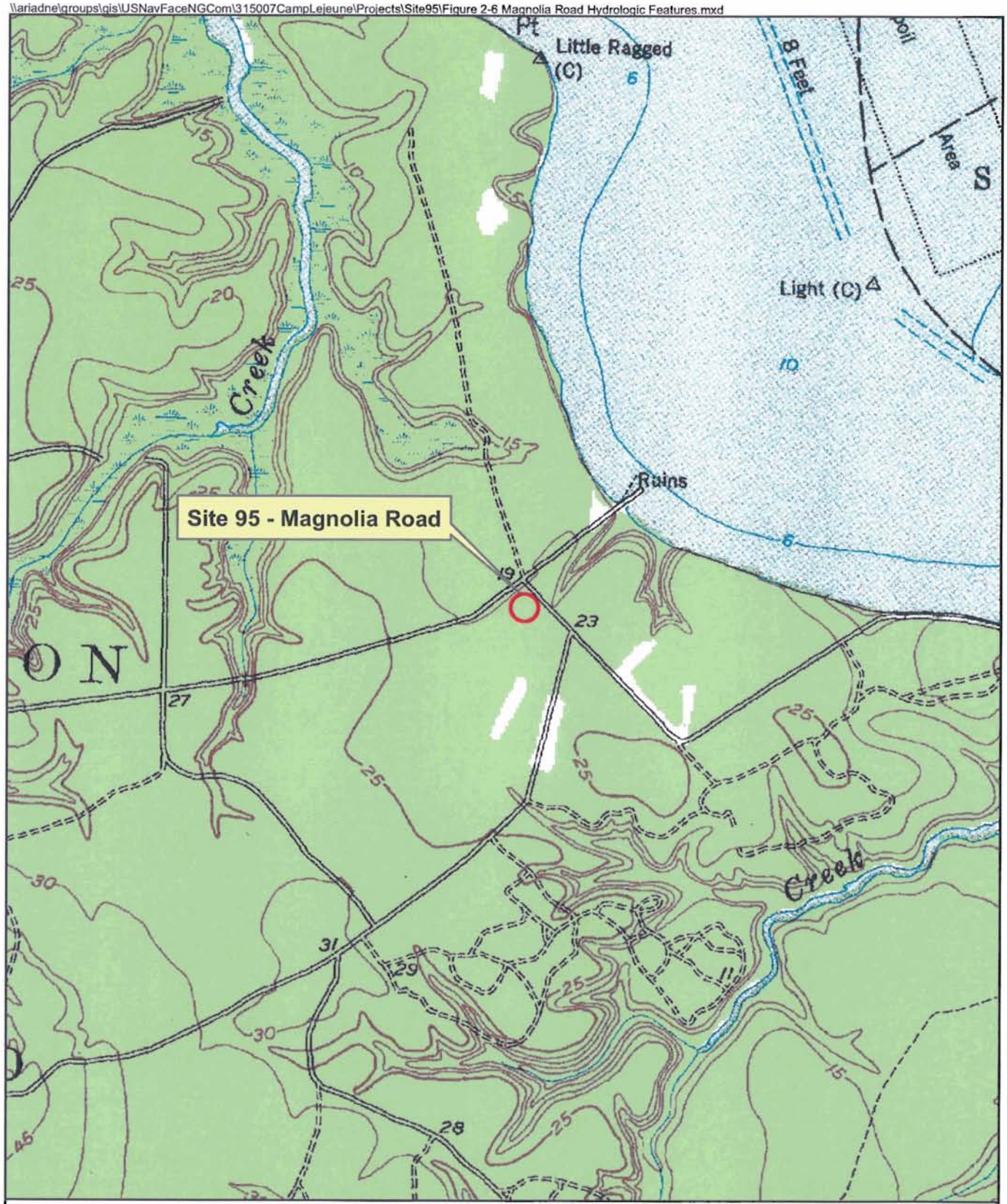

N

0 625 1,250

Feet

Figure 2-6
Site 95 - Magnolia Road Hydrologic Features
Site 95 - Site Investigation
MCB Camp Lejeune, North Carolina

CH2MHILL

\\ariadne\groups\gis\USNavFaceNGCom\315007CampLejeune\Projects\Site95\Figure 2-7 Lyman Road Hydrologic Features.mxd

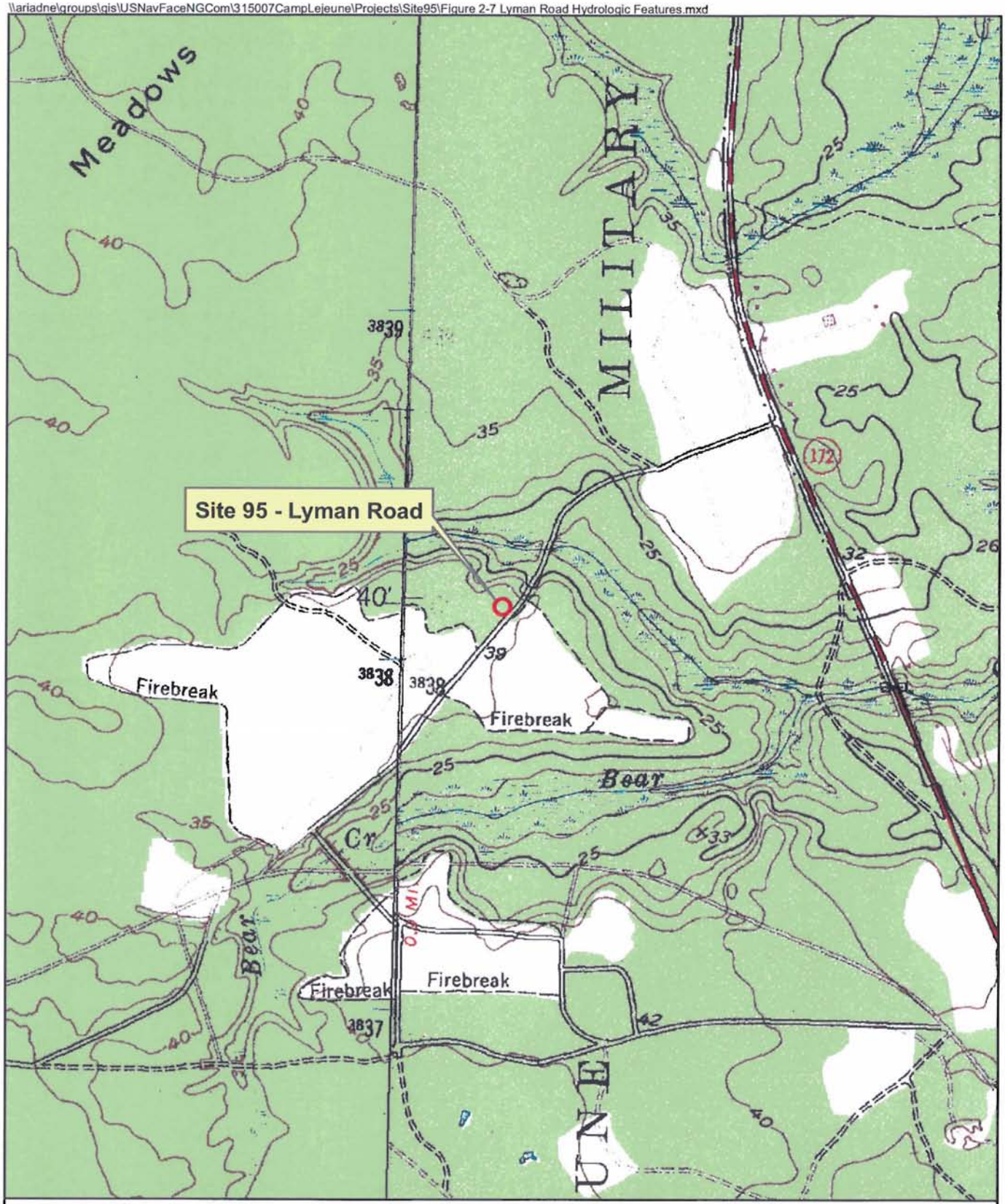

N

0 625 1,250
Feet

Figure 2-7
Site 95 - Lyman Road Hydrologic Features
Site 95 - Site Investigation
MCB Camp Lejeune, North Carolina

CH2MHILL

SECTION 3

Field Investigation Activities and Data Evaluation

3.1 Field Investigation Activities

Field activities were conducted between February and October of 2006 in accordance with Standard Operating Procedures (SOPs) outlined in the *Site Investigation Work Plan, Site 95 – Operable Unit No. 22, Historic Livestock Dipping Vats, Marine Corps Base Camp Lejeune, North Carolina* (CH2M HILL, 2006). These procedures are detailed in the Master Project Plans (CH2M HILL, 2005).

The SI field activities consisted of the following:

- Installation of monitoring wells;
- Groundwater sampling of site monitoring wells;
- Surface and subsurface soil sampling; and
- Survey of monitoring well and soil boring locations.

A summary of the samples collected at each site is provided in **Table 3-1**. Groundwater elevations measured at each site are provided in **Table 3-2**. The detailed investigation activities conducted at each location of Site 95 are included in the site-specific Sections 4, 5, and 6.

3.2 Data Evaluation

This section presents information on the management and evaluation of analytical data collected during the SI. This includes data tracking and validation to ensure data quality. It also includes evaluation of non site-related analytical results, regulatory and risk-based standards, and data presentation and evaluation.

3.2.1 Data Tracking and Validation

The management and tracking of data from the time of field collection to receipt of validated electronic analytical results reflects the overall quality of the analytical results. Field samples and their corresponding analytical tests were recorded on chain-of-custody (COC) forms, which were submitted with the samples to the laboratory. COC entries were checked against the *Site Investigation Work Plan, Site 95 – Operable Unit No. 22, Historic Livestock Dipping Vats, Marine Corps Base Camp Lejeune, North Carolina* (CH2M HILL, 2006) to verify all designated samples were collected and submitted for the appropriate analyses. Upon receipt of the samples by the laboratory (Mitkem), a comparison to the field information was made to verify that each sample was analyzed for the correct parameters.

In addition, a check was made to ensure that the proper number and types of quality assurance/quality control (QA/QC) samples were collected. QA/QC samples included field blanks, equipment blanks, trip blanks, duplicates, matrix spike/matrix spike duplicate (MS/MSD) samples, and laboratory blanks.

Analytical data reports, in hard copy and electronic format, were submitted for third-party validation. Procedures used for the validation process were *National Functional Guidelines for Organic Data Review* (USEPA, 1999), and *National Functional Guidelines for Inorganic Data Review* (USEPA, 2004). The electronic data was downloaded into the CH2M HILL master database. These steps (third-party validation and electronic data handling) serve to reduce inherent uncertainties associated with data authenticity and usability.

3.2.2 Data Qualifiers

All analytical data were validated. The complete analytical results of the SI investigation are provided in **Appendix B**. The data validation qualifiers utilized include:

- Data qualified with a "B" flag by the data validator indicate that the analytes have also been detected in a field, equipment, or trip blank, or in a laboratory QA/QC sample. The concentration of a "B"-qualified result is less than ten times the concentration of the constituent for an associated QA/QC result. If the sample concentration is less than ten times the associated blank concentration, the conclusion is that the parameter was not detected.
- Data qualified with a "J" flag indicate that the analyte is present and the value is estimated. The reported value may or may not be accurate or precise.
- Data qualified with a "U" indicate that the analyte was not detected and the associated number indicates the approximate sample concentration necessary to be detected.
- Data qualified with a "UJ" indicate that the analyte was not detected and the quantitation limit may be inaccurate or imprecise.

3.2.3 Evaluation of Non-Site-Related Analytical Results

3.2.3.1 Laboratory and Sampling Blank Contamination

In some instances, chemical compounds detected in samples may have been introduced during field sampling, transportation to the analytical laboratory, or during laboratory procedures. Thus, a variety of blank samples were analyzed and used in the QA process to determine if the contamination is site-related or is due to sample handling. Blank samples usually collected include a field blank, to account for ambient conditions during sampling; an equipment or rinseate blank, to determine if the equipment used to collect the samples (e.g., trowels or mixing bowls) was adequately clean; and a trip blank, to ascertain if volatile organic compounds (VOCs) were introduced during packing or shipping. Additionally, the laboratory analyzes a method blank in each batch of twenty samples to verify instrument cleanliness and function. Common laboratory contaminants that can be introduced during the analytical process are acetone, 2-butanone, methylene chloride, and common phthalate contaminants. When blank samples are found to contain common laboratory contaminants, each of the aqueous field samples that are associated with that blank and contain up to 10 times the concentrations in the blanks are qualified during data

validation with a "B" for that compound. A "B" qualifier means that the compound may not be attributed to the site at that sample location. When a sampling or laboratory blank contains contaminants other than the common laboratory contaminants, each of the aqueous field samples associated with that blank and that contain up to five times the concentrations is qualified in the blank during data validation with a "B" for that compound.

To determine if a "B" qualifier should be assigned to a soil sample, a unit conversion is performed whereby soil sample concentrations to aqueous samples or laboratory blank concentrations are determined by dividing the soil concentration by the percent moisture, then dividing the result by five. A "B" qualifier designation as described above for aqueous samples can then be applied directly to the converted soil concentrations.

3.2.3.2 Background Data

To identify constituents present in site media reflective of a potential site-related release, naturally occurring and anthropogenic compounds detected at each site were compared to available background data.

The findings of the basewide background soil investigation were presented in the *Final Base Background Study* (Baker, 2001). Surface and subsurface soil samples were collected to establish background soil quality. In general, inorganic constituents were detected at similar levels of concentration in the surface and subsurface samples. There were differences between the datasets, primarily attributed to the soil type in each soil horizon. Analysis indicated that the majority of constituents are more prevalent in the fine-grained soils (clay and silts) than in coarse-grained soils (sands). The concentrations of aluminum, calcium, magnesium, and iron exceeded all other constituents analyzed during the study. Cadmium, silver, and thallium were also detected; however, these analytes may be anthropogenic in origin, as they did not appear to be common constituents in Base soils.

The findings of the basewide background groundwater investigation were presented in the *Base Background Groundwater Study* (Baker, 2002). Groundwater samples were collected from shallow and deep monitoring wells. In general, similar inorganics were detected in both the shallow and deeper monitoring wells. The deeper wells appeared to have a higher concentration of inorganics than the shallow. Arsenic, iron, lead, and manganese were detected at concentrations in exceedance of the NCGWS.

The background data are provided in **Appendix C**.

3.2.4 Data Evaluation

All site groundwater data were compared to North Carolina Groundwater Quality Standards (NCGWQS). The State of North Carolina, through rules of Subchapter 2L of the NCAC Title 15A, establishes a series of classifications and water quality standards that are appropriate for the purpose of classifying groundwater in the state. NCGWQS are enforceable standards intended to provide a guidance level in preventing groundwater pollution above naturally occurring levels of specified chemical constituents and are based upon what is considered naturally occurring. The goal is to preserve and protect present and anticipated uses of groundwater.

All site soil data were compared to North Carolina Soil Screening Levels (SSLs) and EPA Region 9 Residential Preliminary Remediation Goals (PRGs). SSLs are chemical-specific screening levels for the protection of groundwater used for drinking (NCDENR, 2005). The goal is to separate areas of contamination that can be eliminated from additional investigation from those which require further evaluation to determine if remedial action is necessary. Similarly, PRGs are risk-based concentrations that are intended to assist in initial screening-level evaluations. PRGs are EPA guidelines and are not legally enforceable (EPA, 2006). Region 9 PRGs are based on a 1 in 1,000,000 (10^{-6}) cancer risk of 10^{-6}; however, a cancer risk up to 1 in 10,000 (10^{-4}) is acceptable. Therefore, site soil data was also compared to the upper bounds of the acceptable cancer risks based on the Residential PRGs and a 10^{-4} cancer risk.

Additionally, to identify constituents present in site media reflective of a potential site-related release, naturally occurring and anthropogenic compounds (metals) detected at each site were compared to available background data as discussed in Section 3.2.3.

A human health risk screening (HHRS) was conducted for each site to refine the evaluation of potential risk to human health.

3.3 Screening Characterization

The data collected during the SI at each site were evaluated via a conservative screening process to determine if site-related compounds are present at levels that could pose a risk to exposed human receptors. A phased approach was applied to the HHRS to allow the screening to focus on relevant constituents. This phased approach is described below.

3.3.1 Human Health Risk Screening (HHRS)

The first step of the screening was to compare the site data to conservative risk-based screening criteria. The maximum detected concentrations in soil were compared to the most current USEPA Region 9 Residential PRGs (USEPA, October 2004), based on a cancer risk of 10^{-6}. PRGs are based on direct contact exposure pathways. These are conservative screening processes since the residential contact rates, and hence exposure, are higher than those for industrial contact. Furthermore, it is unlikely that the site would be redeveloped for residential use. As described in Section 3.2, Region 9 PRGs are based on a cancer risk of 10^{-6}; however, cancer risk up to 10^{-4} is acceptable. Therefore, the maximum detected concentrations in soil were also compared to the upper bounds of the acceptable cancer risks based on the Residential PRGs and a 10^{-4} cancer risk. Constituents that exceed the upper bounds of the acceptable cancer risks are identified as constituents of potential concern (COPCs) and should be assessed further to determine if they are present at concentrations that could pose risks to exposed receptors.

The maximum detected concentrations in soil were also compared to NC SSLs. As described in Section 3.2.4, SSLs are chemical-specific screening levels for the protection of groundwater used for drinking (NCDENR, 2005). Constituents that exceed the SSL are identified as COPCs and should be assessed further to determine if they are present at concentrations that could pose risks to exposed receptors. Constituents that exceed the SSL in soil samples, but are not detected above screening criteria in groundwater samples are not considered COPCs.

The maximum detected concentrations in groundwater were compared to NCGWQS. NCGWQS are enforceable standards intended to provide a guidance level in preventing groundwater pollution above naturally occurring levels of specified chemical constituents and are based upon what is considered naturally occurring. Constituents that exceed the NCGWQS are identified as COPCs and should be assessed further to determine if they are present at concentrations that could pose risks to exposed receptors.

If the maximum detected concentrations are below the PRGs, SSLs, and NCGWQS, as appropriate, it can be concluded that exposure to the constituents would not pose an unacceptable risk to human receptors. These constituents will not be considered further.

The second step of the Step 1 screening was to compare COPC concentrations to site-specific background concentrations to determine if any constituents are ubiquitous to the site and therefore not indicative of a release. The maximum concentrations of the COPCs were compared to the background soil and groundwater concentrations as determined in the background studies (Baker, 2001 and Baker, 2002). Background levels can be used to identify samples that potentially exceed background conditions. If the maximum concentration of a constituent initially identified as a COPC based on the comparison to PRGs, SSLs, and NCGWQS was less than the background concentration, the constituent was not considered a COPC. Otherwise, the constituent was carried through as a COPC.

Tables

TABLE 3-1
Site Investigation Sample Summary
Site 95 Site Investigation
MCB Camp Lejeune, North Carolina

Number of Samples per Analysis					
Media	**VOCs**	**SVOCs**	**Pesticides/PCBs**	**TAL Metals**	**NAIPs**
Groundwater	**OLC03**	**OLC03**	**OLC03**	**ILM05**	**Chloride, Sulfate, Nitrate, Nitrite US EPA 300 Sulfide SM4500 Ferrous and Ferric Iron SM3500 Methane, Ethane, Methene RSK175 TOC Lloyd Kahn**
Soil	**OLM04**	**OLM04**	**OLM04**	**ILM05**	**NA**
Jaybird Road					
Groundwater	3	3	3	3	3
Surface Soil	3	24	24	24	NA
Subsurface Soil	3	7	7	7	NA
Magnolia Road					
Groundwater	3	3	3	3	3
Surface Soil	3	31	31	31	NA
Subsurface Soil	3	15	15	15	NA
Lyman Road					
Groundwater	3	3	3	3	3
Surface Soil	3	28	28	28	NA
Subsurface Soil	3	14	14	14	NA

Notes:
NA - Not Analyzed
VOCs - Volatile Organic Compounds
SVOCs - Semivolatile Organic Compounds
PCBs - Polychlorinated Biphenyls
TAL - Target Analyte List
NAIPs - Natural Attenuation Indicator Parameters

TABLE 3-2
Groundwater Elevation Data
Site 95 Site Investigation
MCB Camp Lejeune, North Carolina

Well ID	Date	Top of Casing Elevation (ft msl)	Depth to Water (ft)	Groundwater Elevation (ft msl)
IR95A-MW04	7/31/2006	12.6	7.8	4.8
IR95A-MW05	8/1/2006	13.06	8.12	4.94
IR95A-MW06	7/31/2006	6.58	2.59	3.99
IR95B-MW01	8/1/2006	24.69	11.75	12.94
IR95B-MW02	8/1/2006	24.41	11.5	12.91
IR95B-MW03	8/1/2006	23.97	11.3	12.67
IR95C-MW01	3/9/2006	34.02	12.92	21.1
IR95C-MW02	3/9/2006	34.82	13.72	21.1
IR95C-MW03	3/9/2006	33.01	12.11	20.9

Notes:
ft msl - feet above mean sea level
ft - feet
IR95A - well associated with Jaybird Road
IR95B - well associated with Mongolia Road
IR95C - well associated with Lyman Road

COPYRIGHT 2007 BY CH2M HILL, INC. • COMPANY CONFIDENTIAL

Figures

\\aphrodite\projects\USNavFaceNGCom\315007CampLejeune\Projects\Site95\Figure4-1_Jaybird Road Siteand Borings.mxd

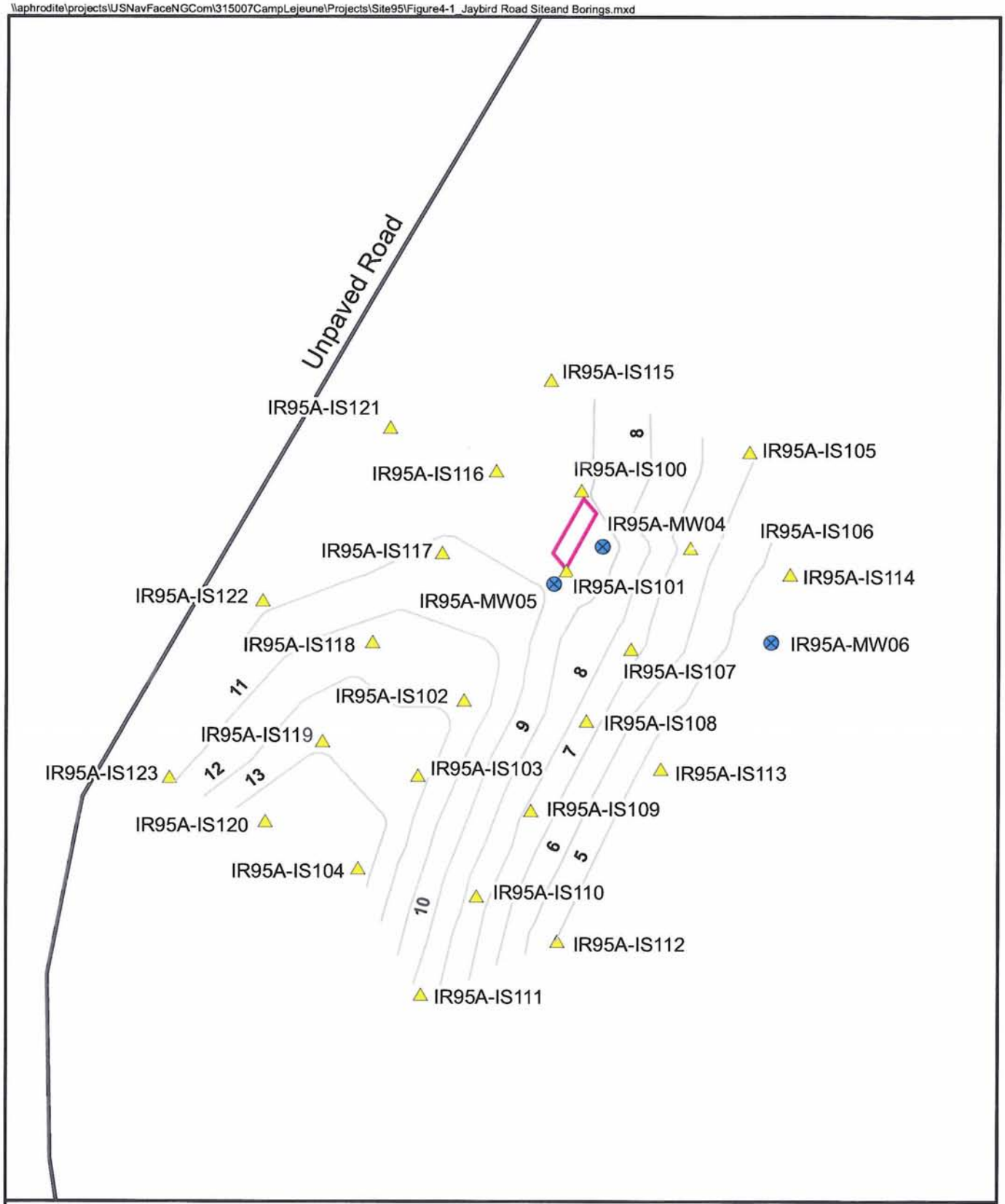

Legend

- Boring Locations
- Monitoring Wells
- Livestock Dipping Vat
- Road
- Surface Contours
- 12 Ground Surface Elevation (ft msl)

N
W E
S

0 12.5 25
Feet

Figure 4-1
Site 95 - Jaybird Road Boring Locations
Site 95 Site Investigation
MCB Camp Lejeune, North Carolina

CH2MHILL

\\aphrodite\projects\USNavFaceNGCom\315007CampLejeune\Projects\Site95\Figure2-8_Jaybird Road Groundwater Contour Map.mxd

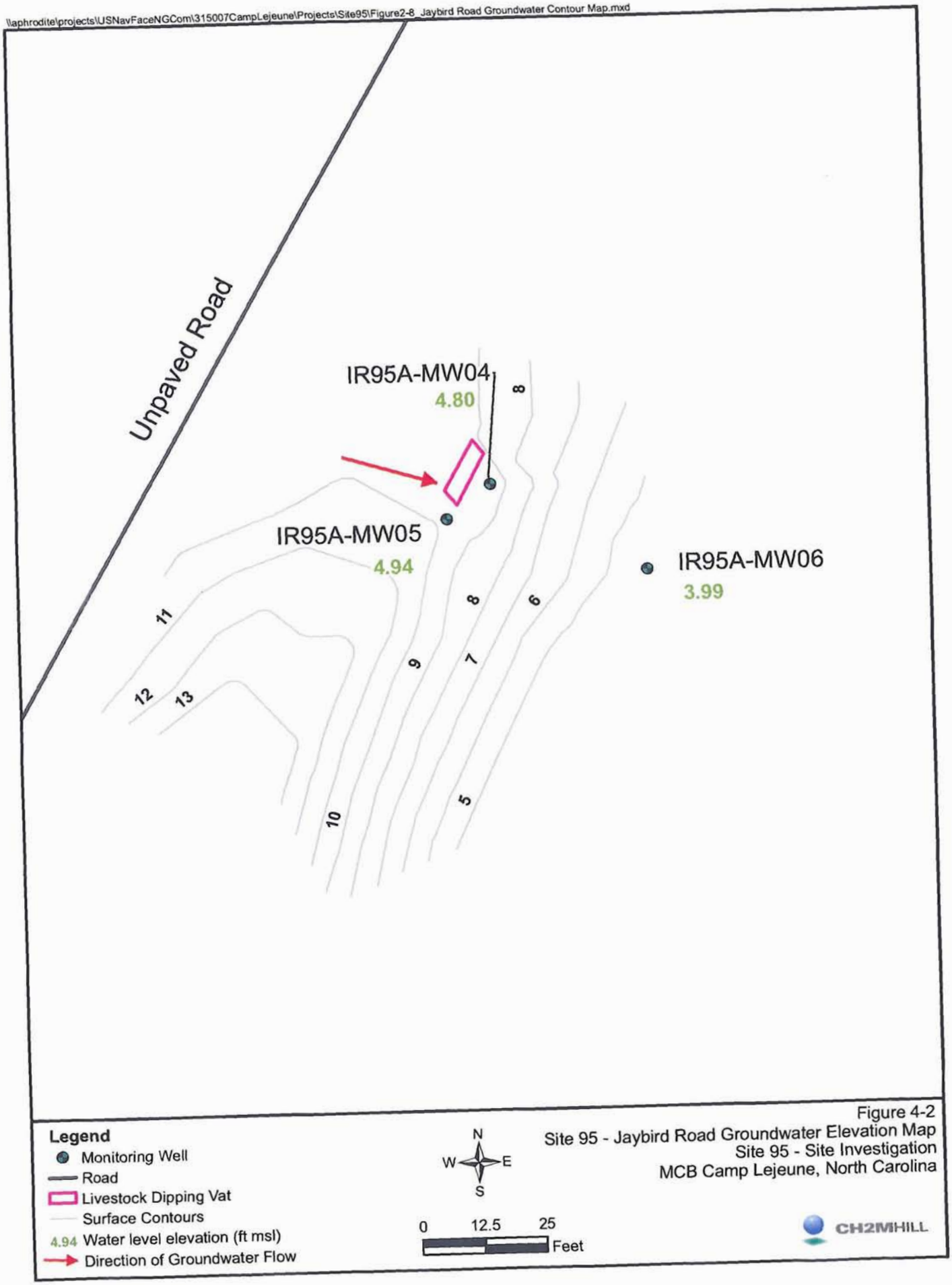

Figure 4-2
Site 95 - Jaybird Road Groundwater Elevation Map
Site 95 - Site Investigation
MCB Camp Lejeune, North Carolina

\\aphrodite\projects\USNavFaceNGCom\315007CampLejeune\Projects\Site95\Figure4-3_ Jaybird Road Soil Analytical Results.mxd

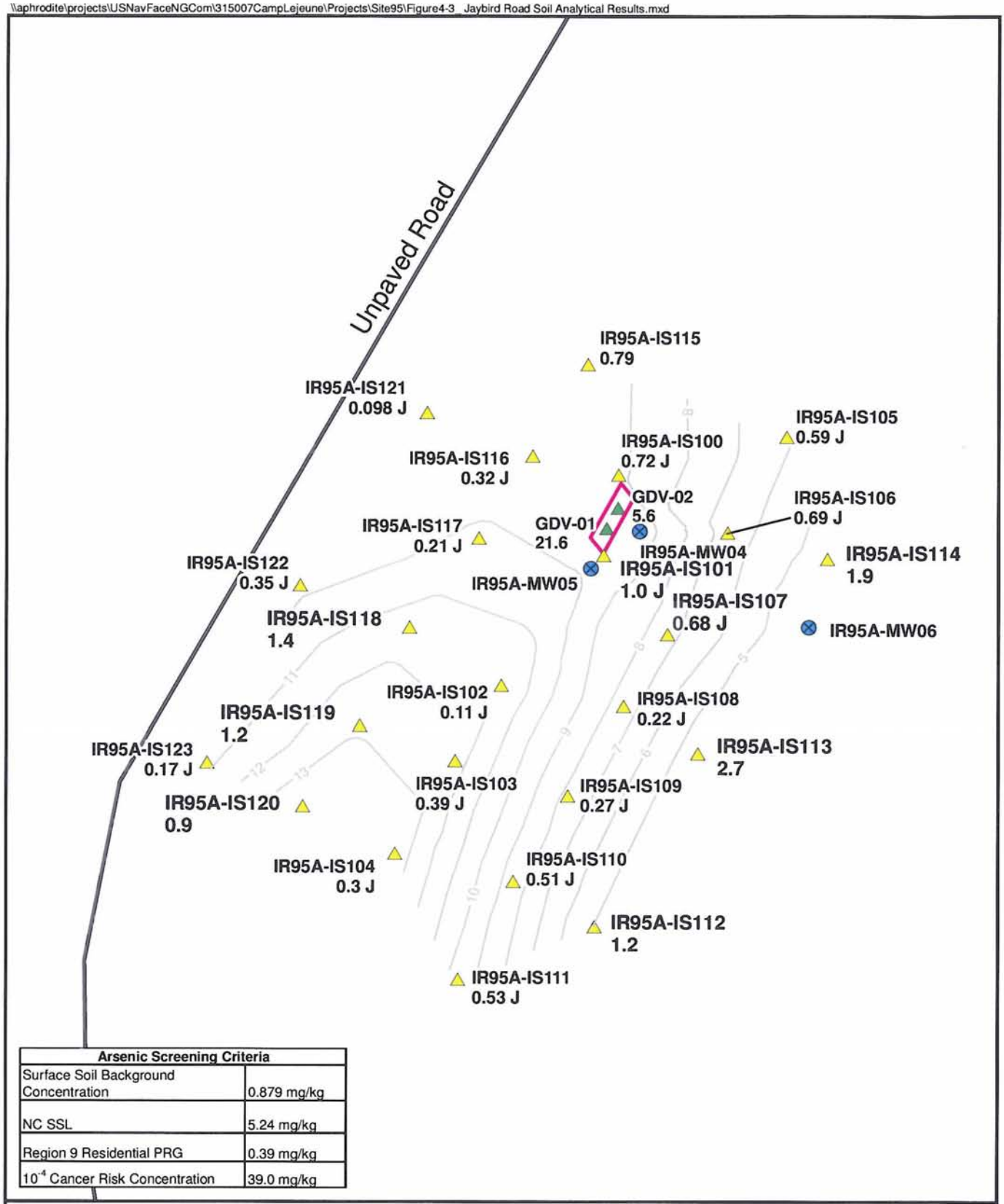

Arsenic Screening Criteria	
Surface Soil Background Concentration	0.879 mg/kg
NC SSL	5.24 mg/kg
Region 9 Residential PRG	0.39 mg/kg
10^{-4} Cancer Risk Concentration	39.0 mg/kg

Legend
- Monitoring Wells
- Soil Boring Locations
- Historical Boring Locations
- Livestock Dipping Vat
- Surface Contours
- Road

All concentration are reported in mg/kg.
J - Estimated Value

0 12.5 25 Feet

N W E S

Figure 4-3
Site 95 - Jaybird Road Surface Soil Arsenic Results
Site 95 - Site Investigation
MCB Camp Lejeune, North Carolina

CH2MHILL

SECTION 4

Site 95 – Jaybird Road

4.1 Site Background

Site 95-Jaybird Road is located north of Jaybird Road approximately 1.6 miles from the eastern bank of the New River and 600 feet south of Frenchs Creek, a tributary of the New River **(Figure 1-2)**. It is located off of an unpaved road north of Jaybird Road in a previously heavily wooded area that was cleared for sampling purposes. The dipping vat at this location is made of brick and is roughly 12 feet long, 4 to 5 feet deep and 3 feet wide.

4.2 Previous Investigations

Initial assessment of the dipping vat at Jaybird Road was performed by Baker and is documented in the report *Suspected Dipping Vat Sampling and Suspected Asbestos Shingle/Transit Board Sampling* (Baker, 2004). Baker collected two soil samples inside the vat, which were analyzed for pesticides and RCRA metals. Arsenic and chromium were detected at concentrations exceeding PRGs, North Carolina Soil-to-Groundwater standards, and Base background levels. Mercury was detected at concentrations exceeding the North Carolina Soil-to-Groundwater standard and Base background levels. Pesticides were not detected at concentrations exceeding method detection limits (MDLs) in soil samples collected from Site 95-Jaybird Road.

4.3 Site Investigation Activities

The investigation at Site 95 – Jaybird Road consisted of direct push technology (DPT), soil sampling, monitoring well installation, and groundwater sampling. Each activity is described in detail in the subsequent sections.

4.3.1 Monitoring Well Installation and Development

Three monitoring wells were installed at Site 95 – Jaybird Road at the locations shown on **Figure 2-1**. The monitoring well locations were selected to represent the entrance to the dipping vat (IR95A-MW04), the exit of the dipping vat (IR95A-MW05), and a downgradient (assumed) location (IR95A-MW06).

In February 2006, Probe Technology, Inc. drilled the shallow monitoring wells using four and one-quarter inch inside diameter (ID) hollow-stem augers (HSAs). Soils were logged by CH2M HILL's onsite geologist according to the Unified Soil Classification System (USCS). Soil descriptions included grain size, USCS symbol and classification, moisture content, relative density or consistency, and any other relevant information such as evidence of contamination.

The wells were constructed, as directed by CH2M HILL's onsite geologist, using two-inch ID, Schedule 40, polyvinyl chloride (PVC) well casing and screen materials. Ten feet of 0.010-inch slot well screen was used for each well. Well screens were installed to bisect the water table. The annular space around the well screen was backfilled with well-graded fine sand to approximately two feet above the top of the screened interval. An approximately two-foot thick bentonite seal was installed above the sand pack. The annular space above the bentonite seal was backfilled with cement and bentonite grout to prevent surface and near subsurface water from infiltrating into the screened groundwater-monitoring zone. Stick-up well covers, each with four protective bollards, were installed at each well and surrounded by a concrete pad.

Appendix D provides the soil boring logs and monitoring well construction diagrams for the wells installed at Site 95 – Jaybird Road.

Monitoring wells were developed using pumping and surging methods. Conductivity, pH, temperature, dissolved oxygen (DO), oxidation reduction potential (ORP), and turbidity were monitored during development. Field measurements from well development are included in **Table 4-1**.

4.3.2 Geotechnical Analysis

One undisturbed (UD) soil sample was collected from Site 95 – Jaybird Road for geotechnical analysis. The UD soil sample was collected from IR95A-MW05 at a depth of 6.5 feet bgs to 7 feet bgs. The sample was sealed and transported to Geotechnics Geotechnical and Geosynthetic Laboratories in Raleigh, North Carolina for analysis of geotechnical parameters including permeability, porosity, and grain size distribution.

4.3.3 Groundwater Sampling

Once the new monitoring wells were installed and developed, a round of groundwater samples were collected as part of the SI field activities.

Depth-to-groundwater measurements were collected from the Site 95 – Jaybird Road monitoring wells (**Table 3-2**). Measurements were collected from each well with a water-level probe prior to purging and sampling and converted to water-level elevations using the top-of-casing elevation survey data. These data were also used to determine groundwater flow direction.

Groundwater samples were collected from the three newly installed monitoring wells using a peristaltic pump and low flow sampling techniques from July 31 through August 1, 2006. Well water was purged at a rate of 0.1 gallons per minute (gpm). During purging, water quality parameters were measured using a Horiba U-22® water quality indicator. These parameters included conductivity, turbidity, DO, pH, temperature, and ORP. Field measurements from sampling are included on **Table 4-2**. At least one well volume was purged from each well prior to sampling. Groundwater samples were collected directly from disposable tubing into pre-preserved laboratory prepared sample bottles. Once collected in appropriately labeled containers, groundwater samples were immediately packed on ice in coolers and shipped via Federal Express delivery to Mitkem Corporation of Warwick, Rhode Island, an NCDENR-approved laboratory, for analysis. Groundwater samples remained in the presence of a CH2M HILL project representative until delivery to

the Federal Express location. A chain-of-custody record was used to maintain a record of personnel who had control of the samples. The groundwater samples were analyzed for VOCs, SVOCs, PCBs, natural attenuation indicator parameters (NAIPs), target analyte list (TAL) metals, and pesticides in accordance with **Table 3-1**.

Groundwater chain-of-custody forms for the groundwater assessment are included in **Appendix E**.

4.3.4 Direct Push Technology Boring (Soil Sampling)

The Site 95 – Jaybird Road soil investigation consisted of gridded soil sampling using DPT. In October 2006, a total of 24 borings were advanced at the vat location and placed on approximately 20 foot centers near the vat, with slightly wider spacing in the surrounding areas, as shown on **Figure 4-1**. Continuous core soil samples were collected for visual description and VOC screening in disposable acetate sleeves using a macro-core soil sampler.

Surface soil samples were collected at each boring location from a depth interval of zero to one foot bgs for laboratory analysis. Nine subsurface soil samples were collected above the water table from a depth interval of three to four feet bgs for laboratory analysis. Once collected in appropriately labeled containers, soil samples were immediately packed on ice in coolers and shipped via Federal Express delivery to Mitkem Corporation for analysis. Soil samples remained in the presence of a CH2M HILL project representative until delivery to the Federal Express location. A chain-of-custody record was used to maintain a record of personnel who had control of the samples.

Soil samples were analyzed for VOCs, SVOCs, PCBs, TAL metals, and pesticides in accordance with **Table 3-1**.

Chain-of-custody forms for the soil assessment are included in **Appendix F**.

4.4 Site 95-Jaybird Road Soil and Hydrogeology

4.4.1 Lithologic Description

The geology of the investigation area at Site 95-Jaybird Road is consistent with the facility and regional geology. Three borings at Site 95-Jaybird Road were advanced to 15 feet bgs (IR95A-MW04, IR95A-MW05, and IR95A-MW06), 15 borings were advanced to one foot bgs, and nine borings were advanced to four feet bgs. Boring locations are shown on **Figure 4-1** and lithologic descriptions are provided in **Appendix D**. The surface soil to one foot bgs is mostly composed of tan to gray silty sand or very fine to fine grained sand. In the topographically low lying part of the site, the surface soil was a dark brown clayey sand. The underlying soil is composed of tan to gray fine sands, which have varying amounts of silts and clays. Clay content increases forming a light gray clayey fine sand that is encountered between 8 and 15 feet bgs.

4.4.2 Groundwater Characteristics

Groundwater elevations at the site ranged from 3.99 to 4.94 feet msl during the water level survey conducted at Site 95-Jaybird Road (**Table 3-2**). Data collected for this SI indicate that

the direction of groundwater flow is easterly across the site towards Frenchs Creek (**Figure 4-2**), with an average gradient of 0.023 feet/feet.

4.5 Analytical Results

Analytical results of the SI for Site 95-Jaybird Road are provided in **Appendix B**. Constituents detected at concentrations exceeding Base background concentrations and/or screening criteria in groundwater, surface soil, and subsurface soil are summarized in **Table 4-3** through **4-5,** respectively. Surface soil analytical results in exceedance of screening criteria are shown also shown on **Figure 4-3**.

4.5.1 Groundwater

Volatile Organic Compounds. One VOC (bromoform) was detected at a concentration exceeding MDLs in the groundwater samples collected from Site 95-Jaybird Road monitoring wells. Bromoform was detected in the groundwater sample collected from monitoring well IR95A-MW06 at a concentration of 0.91 micrograms per liter (µg/L). VOCs were not detected at concentrations exceeding NCGWS in groundwater samples collected from Site 95-Jaybird Road.

Semi-Volatile Organic Compounds. SVOCs were not detected at concentrations exceeding MDLs in groundwater samples collected from Site 95-Jaybird Road monitoring wells.

Pesticides/PCBs. Pesticides and PCBs were not detected at concentrations exceeding MDLs in groundwater samples collected from Site 95-Jaybird Road monitoring wells.

Metals. Seven metals were detected at concentrations exceeding MDLs, but less than NCGWQS, in groundwater samples collected from Site 95-Jaybird Road monitoring wells, including aluminum, antimony, cadmium, calcium, manganese, potassium, and sodium. Iron was detected at concentrations in exceedance of the NCGWQS of 300 µg/L in the groundwater samples collected from monitoring wells IR95A-MW01 and IR95A-MW02 at concentrations of 2,080 µg/L and 829 µg/L, respectively. These concentrations are below the Base background concentration of 16,245.5 µg/L.

4.5.2 Surface Soil

Volatile Organic Compounds. Two VOCs, acetone and trichlorofluoromethane, were detected at concentrations exceeding MDLs in surface soil samples collected from Site 95-Jaybird Road. VOCs were not detected in surface soil samples collected from Site 95-Jaybird Road at concentrations exceeding screening criteria.

Semi-Volatile Organic Compounds. Seven SVOCs were detected at concentrations exceeding MDLs, but less than screening criteria, in the surface soil samples collected from Site 95-Jaybird Road, including di-n-butylphthalate, bis(2-ethylhexyl)phthalate, benzaldehyde, benzo(a)anthracene, chrysene, fluoranthene, and pyrene. 4-Methylphenol was detected at a concentration in exceedance of screening criteria, exceeding the SSL in the surface soil sample collected from location IR95A-IS114.

Pesticides/PCBs. Five pesticides were detected at concentrations exceeding MDLs in the surface soil samples collected from Site 95-Jaybird Road, including 4,4'-DDD, 4,4'-DDE, 4,4'-

DDT, endrin, and endrin ketone. Pesticides were not detected at concentrations exceeding screening criteria. PCBs were not detected at concentrations exceeding MDLs in surface soil samples collected from Site 95-Jaybird Road.

Metals. Sixteen metals were detected at concentrations exceeding MDLs in the surface soil samples collected from Site 95-Jaybird Road, including aluminum, barium, beryllium, calcium, chromium, cobalt, copper, lead, magnesium, manganese, nickel, potassium, silver, sodium, vanadium, and zinc. Detected arsenic concentrations exceed the Residential PRG in surface soil samples collected from 14 locations. Arsenic was detected at concentrations above the Base background concentrations in samples collected from seven of these locations, as shown on **Figure 4-3**. Soil samples collected within the vat during Baker's investigation also indicated arsenic concentrations in exceedance of the Residential PRG and Base background concentration (Baker, 2004). Arsenic was not detected at concentrations above the acceptable 10^{-4} cancer risk in any surface soil sample collected at Site 95-Jaybird Road during this or historical investigations. Detected iron concentrations exceed the SSL in surface soil samples collected from 23 locations, but only exceed the Base background concentration in one location, IR95A-IS113. Similarly, detected mercury concentrations exceed the SSL in surface soil samples collected from six locations, but the Base background concentration is exceeded in only one location, IR95A-IS113.

4.5.3 Subsurface Soil

Volatile Organic Compounds. VOCs were not detected at concentrations exceeding MDLs in subsurface soil samples collected from Site 95-Jaybird Road.

Semi-Volatile Organic Compounds. Three SVOCs, caprolactam, di-n-butylphthalate, and bis(2-ethylhexyl)phthalate, were detected at concentrations exceeding MDLs in the subsurface soil samples collected from Site 95-Jaybird Road; however, SVOCs were not detected at concentrations exceeding screening criteria.

Pesticides/PCBs. The pesticide 4,4'-DDE was detected in two subsurface soil samples collected from Site 95-Jaybird Road at concentrations exceeding MDLs; however, pesticides were not detected at concentrations exceeding screening criteria. PCBs were not detected at concentrations exceeding MDLs in any subsurface soil samples collected from Site 95-Jaybird Road.

Metals. Fifteen metals were detected at concentrations exceeding MDLs in subsurface soil samples collected from Site 95-Jaybird Road, including aluminum, barium, beryllium, calcium, chromium, cobalt, lead, magnesium, manganese, nickel, potassium, silver, sodium, vanadium, and zinc. Detected arsenic concentrations exceed the Residential PRG in subsurface soil samples collected from two locations; however, both are below the Base background concentration. Arsenic was not detected at concentrations above the acceptable 10^{-4} cancer risk in any subsurface soil sample collected at Site 95-Jaybird Road during this investigation. Detected iron concentrations exceed the SSL in subsurface soil samples collected from seven locations, but remain below the Base background concentration.

4.5.4 Geotechnical Test Results

The undisturbed sample collected from the IR95A-MW05 boring yielded the following results:

- The average permeability is 1.1E-05 cm/sec at 20 degrees Celsius
- The average specific gravity is 2.59 at 20 degrees Celsius
- The grain size ranges from 0.075 to 9.5 mm
- The USCS classification is SM.

Results of the geotechnical analysis are included in **Appendix G**.

4.6 Human Health Risk Screening (HHRS)

As shown on **Table 4-6a**, the maximum detected concentrations of all analytes in groundwater were below NCGWQS, except iron, which was detected below the Base background concentration. Therefore, the detected iron concentrations are consistent with background conditions, rather than site releases. No COPCs are identified for Site 95-Jaybird Road groundwater.

As shown on **Table 4-6b**, the maximum detected concentrations of all analytes in surface soil were below screening criteria, except 4-methylphenol, arsenic, iron, and mercury. The SVOC 4-methylphenol was detected above the SSL. As described in Section 3.2.4, SSLs are screening levels to protect groundwater; however, 4-methylphenol is not detected at concentrations exceeding MDLs in any groundwater samples collected at Site 95-Jaybird Road. Therefore, 4-methylphenol is not retained as a COPC. Arsenic concentrations detected in surface soil exceeded the Residential PRG and the Base background concentration; however, arsenic concentrations in surface soil did not exceed the 10^{-4} cancer risk. Therefore, arsenic is not retained as a COPC in surface soil. Iron and mercury exceeded SSLs and Base background concentrations; however, based on known historical site activities, these metals are likely naturally occurring. Therefore, iron and mercury are not included as COPCs.

As shown on **Table 4-6c**, the maximum detected concentrations of all organics, pesticides, and PCBs in subsurface soil were below Residential PRGs and SSLs. The maximum detected concentrations of arsenic and iron in subsurface soil were in exceedance of the Residential PRG and SSL, respectively; however, both metals were detected below the Base background concentrations. The detected metal concentrations are consistent with Base background conditions, rather than site releases. No COPCs are identified for Site 95-Jaybird Road subsurface soil.

4.7 Conclusions

Based on the results of the SI, no unacceptable risks to humans exposed to constituents in groundwater, surface soil, or subsurface soil at Site 95-Jaybird Road were identified.

Tables

Table 4-1

Water Quality Parameters Collected During Monitoring Well Development at Jaybird Road

Site 95 Site Investigation

MCB Camp Lejeune, North Carolina

Station ID	IR95A-MW04	IR95A-MW05	IR95A-MW06
Development Date	2/23/2006	2/23/2006	2/23/2006
Field Parameters			
Dissolved Oxygen (mg/l)	5.18	5.47	6.09
Oxidation Reduction Potential (mV)	93	176	217
pH	5.55	5.33	5.09
Specific Conductivity (ms/cm)	0.052	0.046	0.036
Temperature (C)	15.34	15.46	14.80
Turbidity (NTU)	125	106	65.4
Volume (gal)	80	110	95

Table 4-2
Water Quality Parameters Collected During Groundwater Sampling at Jaybird Road
Site 95 Site Investigation
MCB Camp Lejeune, North Carolina

Station ID	IR95A-MW04	IR95A-MW05	IR95A-MW06
Sample Date	7/31/2006	8/1/2006	7/31/2006
Field Parameters			
Dissolved Oxygen (mg/l)	2.14	3.13	4.25
Depth to Water (ft)	8.07	8.29	2.68
Oxidation Reduction Potential (mV)	-84	17	302
pH	5.7	5.73	4.73
Specific Conductivity (ms/cm)	0.19	0.347	0.132
Temperature (C)	19.78	19.71	21.91
Turbidity (NTU)	65.8	41.8	9.4
Volume (gal)	7.5	5	6

TABLE 4-3

Concentrations of VOCs, SVOCs, Pesticides, Metals, and Geochemical Parameters in Groundwater at Jaybird Road

Site 95 Site Investigation

MCB Camp Lejeune, North Carolina

Station ID	Units	**NC2LGW (May2005)**	IR95A-MW04		IR95A-MW05	IR95A-MW06
Sample ID			IR95A-GW04-06C	IR95A-GW04D-06C	IR95A-GW05-06C	IR95A-GW06-06C
Sample Date			07/31/06	07/31/06	08/01/06	07/31/06
Chemical Name						
VOCs (µg/L)						
Bromoform	µg/L	4.43	0.5 U	0.5 U	0.5 U	0.91 J
SVOCs (µg/L)						
No Detections						
PEST/PCBs (µg/L)						
No Detections						
Total Metals (µg/L)						
Aluminum	µg/L	--	1,290	935	423	200 U
Antimony	µg/L	--	2.3 J	60 U	1.3 J	60 U
Cadmium	µg/L	1.75	5 U	5 U	5 U	0.16 J
Calcium	µg/L	--	28,200	19,700	18,700	5,000 U
Iron	µg/L	300	2,080	1,460	829	121
Manganese	µg/L	50	15.1	15 U	15 U	15 U
Potassium	µg/L	--	679 J	680 J	546 J	876 J
Sodium	µg/L	--	10,800	9,950	10,200	9,960
Wet Chemistry (mg/L)						
Alkalinity	mg/L	--	55	70	50	20 U
Chloride	mg/L	250	18	21	17	15
Ferrous iron	mg/L	--	1.3 J	1.4 J	1 UJ	1 UJ
Methane	mg/L	--	0.1	0.081	0.017	0.014 U
Nitrate	mg/L	10	0.13 UJ	0.13 UJ	0.13 UJ	0.13 J
Sulfate	mg/L	250	8.6	8.2	9.9	8.9

Notes:

U- Analyte not detected

J- Reported value is estimated

UJ- Analyte not detected. Quantitation limit is imprecise

Shading represents exceedance of NC2L GW Standard

VOCs- Volatile Organic Compounds

SVOCs- Semi-volatile Organic Compounds

PEST/PCBs- Pesticide/Polychlorinated Biphenyls

TABLE 4-4
Concentrations of VOCs, SVOCs, Pesticides, PCBs, and Metals in Surface Soil at Jaybird Road
Site 95 Site Investigation
MCB Camp Lejeune, North Carolina

Station ID	Units	Surface Soil BaseWide Background 2002	Region 9 PRGs - Residential Soil	10^{-4} Cancer Risk Concentration	NCSSL (May2005)	IR95A-IS100			IR95A-IS101		IR95A-IS102			IR95A-IS103	IR95A-IS104
Sample ID						IR95A-IS100-0-1-06D-1	IR95A-IS100-0-1-06D-2	IR95A-IS100D-0-1-06D-2	IR95A-IS101-0-1-06D-1	IR95A-IS101-0-1-06D-2	IR95A-IS102-0-1-06D-1	IR95A-IS102D-0-1-06D-1	IR95A-IS102-0-1-06D-2	IR95A-IS103-0-1-06D-2	IR95A-IS104-0-1-06D-2
Sample Date						10/03/06	10/04/06	10/04/06	10/03/06	10/04/06	10/03/06	10/03/06	10/04/06	10/04/06	10/04/06
Chemical Name															
VOCs (µg/kg)															
Acetone	µg/kg	--	14,000,000	1,400,000,000	2,810	180	NA	NA	14	NA	78	100	NA	NA	NA
Trichlorofluoromethane(Freon-11)	µg/kg	--	390,000	39,000,000	31,500	12 UJ	NA	NA	11 U	NA	12 U	2 J	NA	NA	NA
SVOCs (µg/kg)															
4-Methylphenol	µg/kg	--	310,000	31,000,000	17.4	NA	360 U	380 U	NA	360 U	NA	NA	350 U	370 U	350 U
Acenaphthylene	µg/kg	--	56,000	5,600,000	11,400	NA	360 U	380 U	NA	360 U	NA	NA	350 U	370 U	350 U
Anthracene	µg/kg	--	22,000,000	2,200,000,000	995,000	NA	360 U	380 U	NA	360 U	NA	NA	350 U	370 U	350 U
Benzaldehyde	µg/kg	--	6,100,000	610,000,000	--	NA	360 UJ	380 UJ	NA	360 U	NA	NA	350 UJ	370 U	350 U
Benzo(a)anthracene	µg/kg	--	620	62,000	343	NA	360 U	380 U	NA	360 U	NA	NA	350 U	370 U	350 U
Benzo(a)pyrene	µg/kg	--	62	6,200	92.8	NA	360 U	380 U	NA	360 U	NA	NA	350 U	370 U	350 U
Benzo(b)fluoranthene	µg/kg	--	620	62,000	1,180	NA	360 U	380 U	NA	360 U	NA	NA	350 U	370 U	350 U
Benzo(g,h,i)perylene	µg/kg	--	2,300,000	230,000,000	6,720,000	NA	360 U	380 U	NA	360 U	NA	NA	350 U	370 U	350 U
Benzo(k)fluoranthene	µg/kg	--	6,200	620,000	11,800	NA	360 U	380 U	NA	360 U	NA	NA	350 U	370 U	350 U
Chrysene	µg/kg	--	62,000	6,200,000	38,150	NA	360 U	380 U	NA	360 U	NA	NA	350 U	370 U	350 U
Di-n-butylphthalate	µg/kg	--	6,100,000	610,000,000	24,800	NA	48 J	48 J	NA	43 J	NA	NA	45 J	41 J	51 J
Fluoranthene	µg/kg	--	2,300,000	230,000,000	276,000	NA	360 U	380 U	NA	360 U	NA	NA	350 U	370 U	350 U
Indeno(1,2,3-cd)pyrene	µg/kg	--	620	62,000	3,320	NA	360 U	380 U	NA	360 U	NA	NA	350 U	370 U	350 U
Phenanthrene	µg/kg	--	2,300,000	230,000,000	59,600	NA	360 U	380 U	NA	360 U	NA	NA	350 U	370 U	350 U
Pyrene	µg/kg	--	2,300,000	230,000,000	286,000	NA	360 U	380 U	NA	360 U	NA	NA	350 U	370 U	350 U
bis(2-Ethylhexyl)phthalate	µg/kg	--	35,000	3,500,000	6,670	NA	80 J	150 J	NA	140 J	NA	NA	190 J	130 J	99 J
PEST/PBCs (µg/kg)															
4,4'-DDD	µg/kg	--	2,400	240,000	129	NA	3.6 U	3.7 U	NA	3.6 U	NA	NA	3.5 J	3.7 U	3.5 U
4,4'-DDE	µg/kg	--	1,700	170,000	--	NA	3.6 U	3.7 U	NA	3.6 U	NA	NA	3.5 U	9.1	3.5 U
4,4'-DDT	µg/kg	--	1,700	170,000	1,360	NA	3.6 U	3.7 U	NA	3.6 U	NA	NA	3.5 U	3.3 J	3.5 U
Aldrin	µg/kg	--	29	2,900	--	NA	1.9 U	1.9 U	NA	1.9 U	NA	NA	1.8 U	1.9 U	1.8 U
Endosulfan sulfate	µg/kg	--	370,000	37,000,000	--	NA	3.6 U	3.7 U	NA	3.6 U	NA	NA	3.5 U	3.7 U	3.5 U
Endrin	µg/kg	--	18,000	1,800,000	440	NA	3.6 U	3.7 U	NA	3.6 U	NA	NA	3.5 U	3.7 U	3.5 U
Endrin aldehyde	µg/kg	--	18,000	1,800,000	--	NA	3.6 U	3.7 U	NA	3.6 U	NA	NA	3.5 U	3.7 U	3.5 U
Endrin ketone	µg/kg	--	18,000	1,800,000	--	NA	3.6 U	3.7 U	NA	3.6 U	NA	NA	3.5 U	3.7 U	3.5 U
Heptachlor epoxide	µg/kg	--	53	5,300	6.34	NA	1.9 U	1.9 U	NA	1.9 U	NA	NA	1.8 U	1.9 U	1.8 U
alpha-Chlordane	µg/kg	--	1,600	160,000	--	NA	1.9 U	1.9 U	NA	1.9 U	NA	NA	1.8 U	1.9 U	1.8 U
gamma-Chlordane	µg/kg	--	1,600	160,000	--	NA	1.9 U	1.9 U	NA	1.9 U	NA	NA	1.8 U	1.9 U	1.8 U
Total Metals (mg/kg)															
Aluminum	mg/kg	8,965	76,000	7,600,000	--	NA	2,900	3,420	NA	5,510	NA	NA	902	1,670	1,670
Antimony	mg/kg	0.564	31	3,100	5.42	NA	0.25 UJ	0.12 UJ	NA	4.6 UJ	NA	NA	4.4 UL	0.42 UJ	0.28 UJ
Arsenic	mg/kg	0.879	0.39	39	5.24	NA	***0.54 J-***	***0.72 J-***	NA	***1 J-***	NA	NA	0.11 J-	0.39 J-	0.3 J-
Barium	mg/kg	19.4	5,400	540,000	848	NA	9.6 J	10 J	NA	11.5 J	NA	NA	7.8 J	9 J	9.7 J
Beryllium	mg/kg	0.252	150	15,000	3.38	NA	0.052 J	0.057 J	NA	0.074 J	NA	NA	0.031 J	0.041 J	0.033 J
Calcium	mg/kg	33,240	--	--	--	NA	327 J	369 J	NA	515	NA	NA	192 J	525	348 J
Chromium	mg/kg	8.93	30	3,000	27.2	NA	4	5.2	NA	7	NA	NA	1.6	4.6	2.3
Cobalt	mg/kg	0.412	900	90,000	--	NA	0.25 J	0.3 J	NA	0.34 J	NA	NA	0.097 U	0.22 J	0.16 U
Copper	mg/kg	11.2	3,100	310,000	704	NA	4.1 U	4.4 U	NA	6.2	NA	NA	12.4	3.6 U	4.1 U
Iron	mg/kg	6,097	23,000	2,300,000	151	NA	1,830	2,230	NA	3,380	NA	NA	483	1,220	816
Lead	mg/kg	25.8	400	40,000	270	NA	7.8	6.5	NA	8.4	NA	NA	3.9	27.5	4.6
Magnesium	mg/kg	804	--	--	--	NA	117 J	140 J	NA	214 J	NA	NA	44.2 J	123 J	89.1 J
Manganese	mg/kg	43.8	1,800	180,000	65.2	NA	11.4 J	11.5 J	NA	7.4 J	NA	NA	5.7 J	12.7 J	12.6 J
Mercury	mg/kg	0.12	23	2,300	0.015	NA	0.096 U	0.1 U	NA	0.096 U	NA	NA	0.089 U	0.094 U	0.094 U
Nickel	mg/kg	1.65	1,600	160,000	56.4	NA	0.9 J	1.1 J	NA	1.2 J	NA	NA	0.31 U	0.6 J	0.48 J
Potassium	mg/kg	384	--	--	--	NA	108 J	137 J	NA	196 J	NA	NA	50.3 U	87.4 U	64.5 U
Silver	mg/kg	0.372	390	39,000	0.217	NA	0.043 J	0.77 U	NA	0.035 J	NA	NA	0.72 U	0.8 U	0.74 U
Sodium	mg/kg	--	--	--	--	NA	26.5 U	25.7 U	NA	36.5 J	NA	NA	13.5 U	24.9 U	25.7 U
Vanadium	mg/kg	28.5	78	7,800	--	NA	5.4	6.7	NA	10	NA	NA	2.2 J	4.5	3.4 J
Zinc	mg/kg	31.2	23,000	2,300,000	550	NA	28.9	18.9	NA	21.7	NA	NA	75.6	10.3	7.7 U

Notes:
Shading Exceeds NCSSLs (North Carolina Soil Screening Levels)
Bold Frame Exceeds Basewide Background Concentrations
Bold and Italicized Exceeds Region 9 PRGs
U- Analyte not detected
J- Reported value is estimated
J- - Reported value is biased low
UJ- Analyte not detected. Quantiation limit is imprecise
NA- Not analyzed
VOCs- Volatile Organic Compounds
SVOCs- Semi-Volatile Organic Compounds
PEST/PCBs- Pesticide/Polychlorinated Biphenyls

TABLE 4-4
Concentrations of VOCs, SVOCs, Pesticides, PCBs, and Metals in Surface Soil at Jaybird Road
Site 95 Site Investigation
MCB Camp Lejeune, North Carolina

Station ID	Units	Surface Soil BaseWide Background 2002	Region 9 PRGs - Residential Soil	10^{-4} Cancer Risk Concentration	NCSSL (May2005)	IR95A-IS105	IR95A-IS106	IR95A-IS107	IR95A-IS108	IR95A-IS109	IR95A-IS110	IR95A-IS111	IR95A-IS112	IR95A-IS113	
Sample ID						IR95A-IS105-0-1-06D-2	IR95A-IS106-0-1-06D-2	IR95A-IS107-0-1-06D-2	IR95A-IS108-0-1-06D-2	IR95A-IS109-0-1-06D-2	IR95A-IS110-0-1-06D-2	IR95A-IS111-0-1-06D-2	IR95A-IS112-0-1-06D-2	IR95A-IS113-0-1-06D-2	IR95A-IS113D-0-1-06D-2
Sample Date						10/04/06	10/04/06	10/04/06	10/04/06	10/04/06	10/04/06	10/04/06	10/04/06	10/04/06	10/04/06
Chemical Name															
VOCs (µg/kg)															
Acetone	µg/kg	--	14,000,000	1,400,000,000	2,810	NA	NA	NA	NA	NA	NA	NA	NA	NA	NA
Trichlorofluoromethane(Freon-11)	µg/kg	--	390,000	39,000,000	31,500	NA	NA	NA	NA	NA	NA	NA	NA	NA	NA
SVOCs (µg/kg)															
4-Methylphenol	µg/kg	--	310,000	31,000,000	17.4	420 U	390 U	390 U	420 U	390 U	430 U	350 U	480 U	690 U	770 U
Acenaphthylene	µg/kg	--	56,000	5,600,000	11,400	420 U	390 U	390 U	420 U	390 U	430 U	350 U	480 U	690 U	770 U
Anthracene	µg/kg	--	22,000,000	2,200,000,000	995,000	420 U	390 U	390 U	420 U	390 U	430 U	350 U	480 U	690 U	770 U
Benzaldehyde	µg/kg	--	6,100,000	610,000,000	--	420 U	120 J	71 J	420 U	42 J	54 J	350 U	57 J	690 U	770 U
Benzo(a)anthracene	µg/kg	--	620	62,000	343	420 U	390 U	390 U	46 J	390 U	430 U	350 U	480 U	690 U	770 U
Benzo(a)pyrene	µg/kg	--	62	6,200	92.8	420 U	390 U	390 U	420 U	390 U	430 U	350 U	480 U	690 U	770 U
Benzo(b)fluoranthene	µg/kg	--	620	62,000	1,180	420 U	390 U	390 U	420 U	390 U	430 U	350 U	480 U	690 U	770 U
Benzo(g,h,i)perylene	µg/kg	--	2,300,000	230,000,000	6,720,000	420 U	390 U	390 U	420 U	390 U	430 U	350 U	480 U	690 U	770 U
Benzo(k)fluoranthene	µg/kg	--	6,200	620,000	11,800	420 U	390 U	390 U	420 U	390 U	430 U	350 U	480 U	690 U	770 U
Chrysene	µg/kg	--	62,000	6,200,000	38,150	420 U	390 U	390 U	43 J	390 U	430 U	350 U	480 U	690 U	770 U
Di-n-butylphthalate	µg/kg	--	6,100,000	610,000,000	24,800	67 J	53 J	53 J	71 J	79 J	63 J	54 J	87 J	110 J	150 J
Fluoranthene	µg/kg	--	2,300,000	230,000,000	276,000	420 U	390 U	390 U	75 J	390 U	430 U	350 U	480 U	690 U	770 U
Indeno(1,2,3-cd)pyrene	µg/kg	--	620	62,000	3,320	420 U	390 U	390 U	420 U	390 U	430 U	350 U	480 U	690 U	770 U
Phenanthrene	µg/kg	--	2,300,000	230,000,000	59,600	420 U	390 U	390 U	420 U	390 U	430 U	350 U	480 U	690 U	770 U
Pyrene	µg/kg	--	2,300,000	230,000,000	286,000	420 U	390 U	390 U	61 J	390 U	430 U	350 U	480 U	690 U	770 U
bis(2-Ethylhexyl)phthalate	µg/kg	--	35,000	3,500,000	6,670	200 J	150 J	810	190 J	160 J	240 J	160 J	290 J	320 J	290 J
PEST/PBCs (µg/kg)															
4,4'-DDD	µg/kg	--	2,400	240,000	129	4.2 U	3.9 U	4 U	4.2 U	2.1 J	4.3 U	3.5 U	4.8 U	6.8 U	7.6 U
4,4'-DDE	µg/kg	--	1,700	170,000	--	8.1 J	3.9 U	4 U	4.6 J	10 J	8.8 J	3.5 U	4.8 U	6.8 U	7.6 U
4,4'-DDT	µg/kg	--	1,700	170,000	1,360	4.5	3.9 U	4 U	4.2 U	3.2 J	2.6 J	3.5 U	4.8 U	6.8 U	7.6 U
Aldrin	µg/kg	--	29	2,900	--	2.2 U	2 U	2 U	2.2 U	2 U	2.2 U	1.8 U	2.5 U	3.5 U	3.9 U
Endosulfan sulfate	µg/kg	--	370,000	37,000,000	--	4.2 U	3.9 U	4 U	4.2 U	3.9 U	4.3 U	3.5 U	4.8 U	6.8 U	7.6 U
Endrin	µg/kg	--	18,000	1,800,000	440	12 J	3.9 U	4 U	4.2 U	4.6 J	4.3 U	3.5 U	4.8 U	6.8 U	7.6 U
Endrin aldehyde	µg/kg	--	18,000	1,800,000	--	4.2 U	3.9 U	4 U	4.2 U	3.9 U	4.3 U	3.5 U	4.8 U	6.8 U	7.6 U
Endrin ketone	µg/kg	--	18,000	1,800,000	--	4.2 U	3.9 U	4 U	4.2 U	3.9 U	4.3 U	3.5 U	4.8 U	6.8 U	7.6 U
Heptachlor epoxide	µg/kg	--	53	5,300	6.34	2.2 U	2 U	2 U	2.2 U	2 U	2.2 U	1.8 U	2.5 U	3.5 U	3.9 U
alpha-Chlordane	µg/kg	--	1,600	160,000	--	2.2 U	2 U	2 U	2.2 U	2 U	2.2 U	1.8 U	2.5 U	3.5 U	3.9 U
gamma-Chlordane	µg/kg	--	1,600	160,000	--	2.2 U	2 U	2 U	2.2 U	2 U	2.2 U	1.8 U	2.5 U	3.5 U	3.9 U
Total Metals (mg/kg)															
Aluminum	mg/kg	8,965	76,000	7,600,000	--	2,180	2,710	3,060	1,000	1,180	1,840	1,400	4,240	5,680	4,350
Antimony	mg/kg	0.564	31	3,100	5.42	0.069 UJ	4.9 UJ	0.1 UJ	0.25 UJ	0.27 UJ	0.053 UJ	0.078 UJ	0.09 UJ	9 UJ	10 UJ
Arsenic	mg/kg	0.879	0.39	39	5.24	***0.59 J-***	***0.69 J-***	***0.68 J-***	0.22 J-	0.27 J-	***0.51 J-***	***0.53 J***	**1.2**	**2.5**	**2.7**
Barium	mg/kg	19.4	5,400	540,000	848	7.6 J	9.5 J	11.9 J	8.1 J	7.6 J	13.6 J	8 J	17.1 J	33.6	25.8 J
Beryllium	mg/kg	0.252	150	15,000	3.38	0.041 J	0.04 J	0.047 J	0.027 J	0.025 J	0.054 J	0.041 J	0.076 J	0.12 J	0.079 J
Calcium	mg/kg	33,240	--	--	--	1,260	544	579	335 J	345 J	1,080	291 J	1,130	734	824
Chromium	mg/kg	8.93	30	3,000	27.2	3.2	3.9	4.3	2.3	2.1	2.8	2.4	5.6	7.4	8
Cobalt	mg/kg	0.412	900	90,000	--	0.25 J	0.27 J	0.3 J	0.29 J	0.17 J	0.34 J	0.22 J	0.51 J	0.54 J	0.81 J
Copper	mg/kg	11.2	3,100	310,000	704	3.6 U	3.8 U	5.9	20.7	4.5 U	4.7 U	3.6 U	4.4 U	16	22.7
Iron	mg/kg	6,097	23,000	2,300,000	151	1,460	2,160	2,110	988	921	1,830	1,060	2,770	6,690	9,390
Lead	mg/kg	25.8	400	40,000	270	6.5	7.2	9.7	25.3	19.9	25.6	7.7	8.9	140	137
Magnesium	mg/kg	804	--	--	--	102 J	151 J	171 J	109 J	93.5 J	210 J	104 J	240 J	379 J	372 J
Manganese	mg/kg	43.8	1,800	180,000	65.2	10.6 J	5.2 J	16.9 J	19.7 J	4.8 J	9.5 J	27	11.8	9.5	17.4
Mercury	mg/kg	0.12	23	2,300	0.015	0.024 J	0.033 J	0.029 J	0.027 J	0.1 U	0.034 J	0.024 U	0.047 U	0.1 J	0.18 J
Nickel	mg/kg	1.65	1,600	160,000	56.4	0.8 J	1.1 J	0.87 J	0.5 J	0.5 J	0.93 J	0.49 J	1.3 J	2.5 J	4.7 J
Potassium	mg/kg	384	--	--	--	87.2 U	120 J	136 J	79.9 U	77.1 U	123 J	80.1 J	165 J	238 J	227 J
Silver	mg/kg	0.372	390	39,000	0.217	0.87 U	0.058 J	0.031 J	0.037 J	0.84 U	0.92 U	0.72 U	1 U	1.5 U	1.7 U
Sodium	mg/kg	--	--	--	--	31 U	30.7 U	30.3 U	28 U	37.1 J	64.2 J	22.3 U	49.4 J	103 J	119 J
Vanadium	mg/kg	28.5	78	7,800	--	5.3	6.4	6.8	3.5 J	4.2 J	5.5	3.9	8.2	11.8	10.4
Zinc	mg/kg	31.2	23,000	2,300,000	550	6.7 U	7.3 U	21.9	16.7	7.5 U	16.6	7.5 U	12.9	14.4 U	21.9

Notes:
Shading Exceeds NCSSLs (North Carolina Soil Screening Levels)
Bold Frame Exceeds Basewide Background Concentrations
Bold and Italicized Exceeds Region 9 PRGs
U- Analyte not detected
J- Reported value is estimated
J- - Reported value is biased low
UJ- Analyte not detected. Quantiation limit is imprecise
NA- Not analyzed
VOCs- Volatile Organic Compounds
SVOCs- Semi-Volatile Organic Compounds
PEST/PCBs- Pesticide/Polychlorinated Biphenyls

TABLE 4-4
Concentrations of VOCs, SVOCs, Pesticides, PCBs, and Metals in Surface Soil at Jaybird Road
Site 95 Site Investigation
MCB Camp Lejeune, North Carolina

Station ID	Units	Surface Soil BaseWide Background 2002	Region 9 PRGs - Residential Soil	10^{-4} Cancer Risk Concentration	NCSSL (May2005)	IR95A-IS114	IR95A-IS115	IR95A-IS116	IR95A-IS117	IR95A-IS118	IR95A-IS119	IR95A-IS120	IR95A-IS121	IR95A-IS122	IR95A-IS123
Sample ID						IR95A-IS114-0-1-06D-2	IR95A-IS115-0-1-06D-2	IR95A-IS116-0-1-06D-2	IR95A-IS117-0-1-06D-2	IR95A-IS118-0-1-06D-2	IR95A-IS119-0-1-06D-2	IR95A-IS120-0-1-06D-2	IR95A-IS121-0-1-06D-2	IR95A-IS122-0-1-06D-2	IR95A-IS123-0-1-06D-2
Sample Date						10/04/06	10/04/06	10/04/06	10/04/06	10/04/06	10/04/06	10/04/06	10/04/06	10/04/06	10/04/06
Chemical Name															
VOCs (µg/kg)															
Acetone	µg/kg	–	14,000,000	1,400,000,000	2,810	NA	NA	NA	NA	NA	NA	NA	NA	NA	NA
Trichlorofluoromethane(Freon-11)	µg/kg	–	390,000	39,000,000	31,500	NA	NA	NA	NA	NA	NA	NA	NA	NA	NA
SVOCs (µg/kg)															
4-Methylphenol	µg/kg	–	310,000	31,000,000	17.4	160 J	360 U	350 U	340 U	360 U	370 U	370 U	340 U	340 U	350 U
Acenaphthylene	µg/kg	–	56,000	5,600,000	11,400	460 U	360 U	350 U	340 U	360 U	370 U	370 U	340 U	340 U	350 U
Anthracene	µg/kg	–	22,000,000	2,200,000,000	995,000	460 U	360 U	350 U	340 U	360 U	370 U	370 U	340 U	340 U	350 U
Benzaldehyde	µg/kg	–	6,100,000	610,000,000	–	120 J	360 U	350 U	340 U	360 U	69 J	460	340 U	340 U	350 U
Benzo(a)anthracene	µg/kg	–	620	62,000	343	460 U	360 U	350 U	340 U	360 U	370 U	370 U	340 U	340 U	350 U
Benzo(a)pyrene	µg/kg	–	62	6,200	92.8	460 U	360 U	350 U	340 U	360 U	370 U	370 U	340 U	340 U	350 U
Benzo(b)fluoranthene	µg/kg	–	620	62,000	1,180	460 U	360 U	350 U	340 U	360 U	370 U	370 U	340 U	340 U	350 U
Benzo(g,h,i)perylene	µg/kg	–	2,300,000	230,000,000	6,720,000	460 U	360 U	350 U	340 U	360 U	370 U	370 U	340 U	340 U	350 U
Benzo(k)fluoranthene	µg/kg	–	6,200	620,000	11,800	460 U	360 U	350 U	340 U	360 U	370 U	370 U	340 U	340 U	350 U
Chrysene	µg/kg	–	62,000	6,200,000	38,150	460 U	360 U	350 U	340 U	360 U	370 U	370 U	340 U	340 U	350 U
Di-n-butylphthalate	µg/kg	–	6,100,000	610,000,000	24,800	79 J	42 J	48 J	41 J	52 J	64 J	62 J	46 J	64 J	50 J
Fluoranthene	µg/kg	–	2,300,000	230,000,000	276,000	460 U	360 U	350 U	340 U	360 U	370 U	370 U	340 U	340 U	350 U
Indeno(1,2,3-cd)pyrene	µg/kg	–	620	62,000	3,320	460 U	360 U	350 U	340 U	360 U	370 U	370 U	340 U	340 U	350 U
Phenanthrene	µg/kg	–	2,300,000	230,000,000	59,600	460 U	360 U	350 U	340 U	360 U	370 U	370 U	340 U	340 U	350 U
Pyrene	µg/kg	–	2,300,000	230,000,000	286,000	460 U	360 U	350 U	340 U	360 U	370 U	370 U	340 U	340 U	350 U
bis(2-Ethylhexyl)phthalate	µg/kg	–	35,000	3,500,000	6,670	200 J	130 J	210 J	330 J	460	410	1,600	1,100	150 J	78 J
PEST/PBCs (µg/kg)															
4,4'-DDD	µg/kg	–	2,400	240,000	129	4.6 U	3.6 U	3.5 U	3.4 U	3.6 U	3.6 U	3.7 U	3.4 U	3.4 U	3.5 U
4,4'-DDE	µg/kg	–	1,700	170,000	–	4.6 U	3.6 U	3.5 U	3.4 U	3.6 U	3.6 U	3.7 U	3.4 U	3.4 U	3.5 U
4,4'-DDT	µg/kg	–	1,700	170,000	1,360	4.6 U	3.6 U	3.5 U	3.4 U	3.6 U	3.6 U	3.7 U	3.4 U	3.4 U	3.5 U
Aldrin	µg/kg	–	29	2,900	–	2.4 U	1.9 U	1.8 U	1.7 U	1.9 U	1.9 U	1.9 U	1.8 U	1.8 U	1.8 U
Endosulfan sulfate	µg/kg	–	370,000	37,000,000	–	4.6 U	3.6 U	3.5 U	3.4 U	3.6 U	3.6 U	3.7 U	3.4 U	3.4 U	3.5 U
Endrin	µg/kg	–	18,000	1,800,000	440	4.6 U	3.6 U	3.5 U	3.4 U	3.6 U	3.6 U	3.7 U	3.4 U	3.4 U	3.5 U
Endrin aldehyde	µg/kg	–	18,000	1,800,000	–	4.6 U	3.6 U	3.5 U	3.4 U	3.6 U	3.6 U	3.7 U	3.4 U	3.4 U	3.5 U
Endrin ketone	µg/kg	–	18,000	1,800,000	–	3.1 J	3.6 U	3.5 U	3.4 U	3.6 U	3.6 U	3.2 J	3.4 U	3.4 U	3.5 U
Heptachlor epoxide	µg/kg	–	53	5,300	6.34	2.4 U	1.9 U	1.8 U	1.7 U	1.9 U	1.9 U	1.9 U	1.8 U	1.8 U	1.8 U
alpha-Chlordane	µg/kg	–	1,600	160,000	–	2.4 U	1.9 U	1.8 U	1.7 U	1.9 U	1.9 U	1.9 U	1.8 U	1.8 U	1.8 U
gamma-Chlordane	µg/kg	–	1,600	160,000	–	2.4 U	1.9 U	1.8 U	1.7 U	1.9 U	1.9 U	1.9 U	1.8 U	1.8 U	1.8 U
Total Metals (mg/kg)															
Aluminum	mg/kg	8,965	76,000	7,600,000	–	6,300	3,680	1,650	1,120	7,510	5,700	4,850	669	4,510	1,270
Antimony	mg/kg	0.564	31	3,100	5.42	0.57 UJ	0.19 UJ	0.046 UJ	0.06 UJ	4.5 UJ	4.6 UJ	4.5 UJ	4.5 UJ	4.4 UJ	0.056 UJ
Arsenic	mg/kg	0.879	0.39	39	5.24	***1.9***	***0.79***	0.32 J	0.21 J	***1.4***	***1.2***	***0.9***	0.098 J	0.35 J-	0.17 J-
Barium	mg/kg	19.4	5,400	540,000	848	21.5	7.6 J	5.2 J	3.9 J	16.8	13.6 J	13.9 J	2.2 J	34.2	4 J
Beryllium	mg/kg	0.252	150	15,000	3.38	0.1 J	0.054 J	0.032 J	0.024 J	0.096 J	0.086 J	0.076 J	0.019 J	0.2 J	0.027 J
Calcium	mg/kg	33,240	–	–	–	1,390	611	384	223 J	367 J	998	1,670	65.5 J	1,830	264 J
Chromium	mg/kg	8.93	30	3,000	27.2	7.5	4.7	2.4	2.2	8.3	6.8	6.1	1.7	4.1	1.9
Cobalt	mg/kg	0.412	900	90,000	–	0.62 J	0.19 J	0.17 J	0.18 J	0.59 J	0.43 J	0.4 J	0.11 J	1.1 J	0.15 U
Copper	mg/kg	11.2	3,100	310,000	704	6.5	3.1 U	3.1 U	2.6 U	3.9 U	4.5 U	4.3 U	2.7 U	5.9	3.7 U
Iron	mg/kg	6,097	23,000	2,300,000	151	3,610	2,050	860	630	4,180	3,270	2,720	385	4,260	623
Lead	mg/kg	25.8	400	40,000	270	13.3	4.7	3.3	3	5.5	6.5	6.3	2.1	2.4	2.7
Magnesium	mg/kg	804	–	–	–	316 J	143 J	83.1 J	64.5 J	260 J	225 J	231 J	38.1 J	1,890	71.7 J
Manganese	mg/kg	43.8	1,800	180,000	65.2	27	12.3	11.6	14.8	9.7	6.8	11.6	2.2	62.7 J	6.2 J
Mercury	mg/kg	0.12	23	2,300	0.015	0.078 U	0.024 U	0.096 U	0.09 U	0.027 U	0.027 U	0.038 U	0.083 U	0.087 U	0.1 U
Nickel	mg/kg	1.65	1,600	160,000	56.4	1.8 J	1 J	0.54 J	0.37 J	1.7 J	1.4 J	1.5 J	0.3 U	1.9 J	0.46 J
Potassium	mg/kg	384	–	–	–	240 J	132 J	73.5 J	64.9 U	213 J	162 J	162 J	47.3 U	831	70.3 U
Silver	mg/kg	0.372	390	39,000	0.217	0.97 U	0.74 U	0.74 U	0.71 U	0.75 U	0.77 U	0.75 U	0.74 U	0.039 J	0.72 U
Sodium	mg/kg	–	–	–	–	47.4 J	18 U	14.9 U	11.4 U	23.2 U	37.5 J	48.4 J	10 U	860	30.7 U
Vanadium	mg/kg	28.5	78	7,800	–	11.2	7	3.4 J	2.5 J	12.1	9.8	8.4	1.6 J	9	2.7 J
Zinc	mg/kg	31.2	23,000	2,300,000	550	18.2	4.3 U	3.8 U	3.3 U	5.2 U	6.7 U	9.2	5 U	10.4	6.2 U

Notes:
Shading Exceeds NCSSLs (North Carolina Soil Screening Levels)
Bold Frame Exceeds Basewide Background Concentrations
Bold and Italicized Exceeds Region 9 PRGs
U- Analyte not detected
J- Reported value is estimated
J- - Reported value is biased low
UJ- Analyte not detected. Quantiation limit is imprecise
NA- Not analyzed
VOCs- Volatile Organic Compounds
SVOCs- Semi-Volatile Organic Compounds
PEST/PCBs- Pesticide/Polychlorinated Biphenyls

TABLE 4-5
Concentrations of VOCs, SVOCs, Pesticides, PCBs, and Metals in Subsurface Soil at Jaybird Road
Site 95 Site Investigation
MCB Camp Lejeune, North Carolina

Station ID	Units	Subsurface Soil BaseWide Background 2002	Region 9 PRGs - Residential Soil	10^{-4} Cancer Risk Concentration	NCSSL (May2005)	IR95A-IS100	IR95A-IS101			IR95A-IS102	IR95A-IS103	IR95A-IS115	IR95A-IS117	IR95A-IS119		IR95A-IS121	IR95A-IS123
Sample ID						IR95A-IS100-3-4-06D-1	IR95A-IS101-3-4-06D-1	IR95A-IS101-3-4-06D-2	IR95A-IS101D-3-4-06D-2	IR95A-IS102-3-4-06D-1	IR95A-IS103-3-4-06D-2	IR95A-IS115-3-4-06D-2	IR95A-IS117-3-4-06D-2	IR95A-IS119-3-4-06D-2	IR95A-IS119D-3-4-06D-2	IR95A-IS121-3-4-06D-2	IR95A-IS123-3-4-06D-2
Sample Date						10/03/06	10/03/06	10/04/06	10/04/06	10/03/06	10/04/06	10/04/06	10/04/06	10/04/06	10/04/06	10/04/06	10/04/06
Chemical Name																	
VOCs (µg/kg)																	
2-Butanone	µg/kg	--	22,000,000	2,200,000,000	17,100	11 U	11 U	NA	NA	14 U	NA	NA	NA	NA	NA	NA	NA
Acetone	µg/kg	--	14,000,000	1,400,000,000	2,810	11 U	11 U	NA	NA	14 U	NA	NA	NA	NA	NA	NA	NA
Methylene chloride	µg/kg	--	9,100	910,000	20.2	11 U	11 U	NA	NA	14 U	NA	NA	NA	NA	NA	NA	NA
SVOCs (µg/kg)																	
Caprolactam	µg/kg	--	31,000,000	3,100,000,000	--	NA	NA	360 U	390 U	NA	39 J	380 U	420 U	340 U	350 U	390 U	370 U
Di-n-butylphthalate	µg/kg	--	6,100,000	610,000,000	24,800	NA	NA	42 J	54 J	NA	44 J	43 J	58 J	52 J	60 J	50 J	61 J
bis(2-Ethylhexyl)phthalate	µg/kg	--	35,000	3,500,000	6,670	NA	NA	140 J	140 J	NA	130 J	160 J	430	210 J	300 J	86 J	170 J
PEST/PCBs (µg/kg)																	
4,4'-DDE	µg/kg	--	1,700	170,000	--	NA	NA	3.6 U	2.5 J	NA	2.6 J	3.7 U	4.2 U	3.4 U	3.5 U	3.9 U	3.7 U
4,4'-DDT	µg/kg	--	1,700	170,000	1,360	NA	NA	3.6 U	3.9 U	NA	3.7 U	3.7 U	4.2 U	3.4 U	3.5 U	3.9 U	3.7 U
Endrin aldehyde	µg/kg	--	18,000	1,800,000	--	NA	NA	3.6 U	3.9 U	NA	3.7 U	3.7 U	4.2 U	3.4 U	3.5 U	3.9 U	3.7 U
Methoxychlor	µg/kg	--	310,000	31,000,000	56,100	NA	NA	19 U	20 U	NA	19 U	19 U	22 U	18 U	18 U	20 U	19 U
Total Metals (mg/kg)																	
Aluminum	mg/kg	13,061	76,000	7,600,000	--	NA	NA	1,610	1,240	NA	4,790	1,390	1,930	481	732	7,870	4,730
Antimony	mg/kg	0.392	31	3,100	5.42	NA	NA	4.7 UJ	0.085 UJ	NA	0.27 UJ	0.099 UJ	5.4 UJ	0.053 UJ	0.059 UJ	0.14 UJ	0.29 UJ
Arsenic	mg/kg	5.29	0.39	39	5.24	NA	NA	0.14 J-	0.14 J-	NA	***0.51 J-***	0.19 J	***0.83 J***	0.14 J	0.24 J	1.3 J-	0.19 J-
Barium	mg/kg	37.34	5,400	540,000	848	NA	NA	5.9 J	4.8 J	NA	9.9 J	5.5 J	4.5 J	1.9 J	2.2 J	13.2 J	7 J
Beryllium	mg/kg	0.432	150	15,000	3.38	NA	NA	0.027 J	0.03 J	NA	0.075 J	0.03 J	0.039 J	0.019 J	0.021 J	0.094 J	0.067 J
Cadmium	mg/kg	--	37	3,700	0.95	NA	NA	0.38 U	0.42 U	NA	0.38 U	0.4 U	0.45 U	0.35 U	0.36 U	0.43 U	0.38 U
Calcium	mg/kg	944	--	--	--	NA	NA	186 J	126 J	NA	187 J	105 J	51.6 J	44.9 J	66.6 J	308 J	199 J
Chromium	mg/kg	30.9	30	3,000	27.2	NA	NA	1.8	2.3	NA	7	2.1	3.6	1.6	1.8	9.6	5.3
Cobalt	mg/kg	2.33	900	90,000	--	NA	NA	0.13 U	0.16 U	NA	0.3 J	0.19 J	0.2 J	0.075 J	0.082 J	0.58 J	0.28 J
Copper	mg/kg	7.03	3,100	310,000	704	NA	NA	3.2 U	3.2 U	NA	3.1 U	2.9 U	3.1 U	2.3 U	2.5 U	5.3 U	3.5 U
Iron	mg/kg	16,984	23,000	2,300,000	151	NA	NA	996	561	NA	1,910	575	1,480	286	331	3,370	1,030
Lead	mg/kg	12.6	400	40,000	270	NA	NA	2.2	2.3	NA	7	2.4	2.9	1.7	2.3	3.6	2.3
Magnesium	mg/kg	1,022	--	--	--	NA	NA	51.2 J	54.9 J	NA	150 J	61.8 J	79.4 J	22.7 J	28.3 J	264 J	141 J
Manganese	mg/kg	23.6	1,800	180,000	65.2	NA	NA	15.8 J	4.4 J	NA	14.5 J	4.4	3.8	1.8	1.8	6.8 J	3.4 J
Mercury	mg/kg	0.096	23	2,300	0.015	NA	NA	0.1 U	0.099 U	NA	0.094 U	0.094 U	0.11 U	0.086 U	0.097 U	0.099 U	0.09 U
Nickel	mg/kg	4.73	1,600	160,000	56.4	NA	NA	0.61 J	0.55 J	NA	1.8 J	0.46 J	0.53 J	0.2 U	0.22 U	2.3 J	0.83 J
Potassium	mg/kg	1,043	--	--	--	NA	NA	59.1 U	66.8 U	NA	144 J	61.6 U	101 J	44.9 U	49.1 U	342 J	254 J
Silver	mg/kg	0.18	390	39,000	0.217	NA	NA	0.78 U	0.82 U	NA	0.034 J	0.8 U	0.88 U	0.71 U	0.72 U	0.022 J	0.76 U
Sodium	mg/kg	--	--	--	--	NA	NA	31.3 U	35.5 J	NA	26.4 U	14 U	17.6 U	9.1 U	9.8 U	24.8 U	22.7 U
Vanadium	mg/kg	44.7	78	7,800	--	NA	NA	2.8 J	2.4 J	NA	6.8	2.2 J	7	2.1 J	2.1 J	11.8	5.6
Zinc	mg/kg	21.5	23,000	2,300,000	550	NA	NA	2.4 U	3.2 U	NA	12.3	3.1 U	2.3 U	1.8 U	2.3 U	4.8 U	3.9 U

Notes:
Shading Exceeds NCSSLs (North Carolina Soil Screening Levels)
Bold Frame Exceeds Basewide Background Concentrations
Bold and Italicized Exceeds Region 9 PRGs
U- Analyte not detected
J- Reported value is estimated
J- - Reported value is biased low
UJ- Analyte not detected. Quantiation limit is imprecise
NA- Not analyzed
VOCs- Volatile Organic Compounds
SVOCs- Semi-Volatile Organic Compounds
PEST/PCBs- Pesticide/Polychlorinated Biphenyls

TABLE 4-6a
Human Health Risk Screening Step 1 - Jaybird Road Groundwater
Site 95 Site Investigation
MCB Camp Lejeune, North Carolina

Station ID Sample ID Sample Date	NC2LGW (May 2005)	Background	Detection Frequency	Max Detect	SampleID of Maximum Detected Value	Minimum Detect Value	SampleID of Minimum Value	COPC
Chemical Name								
Volatile Organic Compounds (UG/L)								
Bromoform	4.43	--	1 - 3	0.91	IR95A-GW06-06C	0.91	IR95A-GW04-06C	NO
Total Metals (UG/L)								
Aluminum	--	3102.6	2 - 3	1,290	IR95A-GW04-06C	423	IR95A-GW06-06C	NO
Antimony	--	2.42	2 - 3	2.3	IR95A-GW04-06C	1.3	IR95A-GW05-06C	NO
Cadmium	1.75	0.23	1 - 3	0.16	IR95A-GW06-06C	0.16	IR95A-GW06-06C	NO
Calcium	--	131,765.2	2 - 3	28,200	IR95A-GW04-06C	18,700	IR95A-GW06-06C	NO
Iron	300	16245.5	3 - 3	2,080	IR95A-GW04-06C	121	IR95A-GW06-06C	NO
Manganese	50	8330.7	1 - 3	15.1	IR95A-GW04-06C	15.1	IR95A-GW05-06C	NO
Potassium	--	3,422.7	3 - 3	876	IR95A-GW06-06C	546	IR95A-GW05-06C	NO
Sodium	--	24,602.9	3 - 3	10,800	IR95A-GW04-06C	9,960	IR95A-GW06-06C	NO
Wet Chemistry (MG/L)								
Alkalinity	--	--	2 - 3	70	IR95A-GW04-06C	50	IR95A-GW06-06C	NO
Chloride	250	--	4 - 3	21	IR95A-GW04-06C	15	IR95A-GW06-06C	NO
Ferrous iron	--	--	2 - 3	1.4	IR95A-GW04-06C	1.4	IR95A-GW05-06C	NO
Methane	--	--	2 - 3	0.1	IR95A-GW04-06C	0.017	IR95A-GW06-06C	NO
Nitrate	10	--	1 - 3	0.13	IR95A-GW06-06C	0.13	IR95A-GW04-06C	NO
Sulfate	250	--	3 - 3	9.9	IR95A-GW05-06C	8.6	IR95A-GW04-06C	NO

TABLE 4-6b
Human Health Risk Screening Step 1 - Jaybird Road Surface Soil
Site 95 Site Investigation
MCB Camp Lejeune, North Carolina

Station ID Sample ID Sample Date	NCSSL (May 2005)	Region 9 PRGs - Residential Soil	10^{-4} Cancer Risk Concentration	Background	Detection Frequency	Max Detect	SampleID of Maximum Detected Value	Minimum Detect Value	SampleID of Minimum Value	COPC
Chemical Name										
Volatile Organic Compounds (UG/KG)										
Acetone	2,810	14,000,000	1,400,000,000	--	3 - 3	180	IR95A-IS100-0-1-06D-1	14	IR95A-IS101-0-1-06D-1	NO
Trichlorofluoromethane(Freon-11)	31,500	390,000	39,000,000	--	1 - 3	2	IR95A-IS102-0-1-06D-1	2	IR95A-IS102-0-1-06D-1	NO
Semi-volatile Organic Compounds (UG/KG)										
4-Methylphenol	17.4	310,000	31,000,000	--	1 - 24	160	IR95A-IS114-0-1-06D-2	160	IR95A-IS114-0-1-06D-2	NO
Benzaldehyde	--	6,100,000	610,000,000	--	8 - 24	460	IR95A-IS120-0-1-06D-2	42	IR95A-IS109-0-1-06D-2	NO
Benzo(a)anthracene	343	620	62,000	--	1 - 24	46	IR95A-IS108-0-1-06D-2	46	IR95A-IS108-0-1-06D-2	NO
Chrysene	38,150	62,000	6,200,000	--	1 - 24	43	IR95A-IS108-0-1-06D-2	43	IR95A-IS108-0-1-06D-2	NO
Di-n-butylphthalate	24,800	6,100,000	610,000,000	--	24 - 24	150	IR95A-IS113-0-1-06D-2	41	IR95A-IS103-0-1-06D-2	NO
Fluoranthene	276,000	2,300,000	230,000,000	--	1 - 24	75	IR95A-IS108-0-1-06D-2	75	IR95A-IS108-0-1-06D-2	NO
Pyrene	286,000	2,300,000	230,000,000	--	1 - 24	61	IR95A-IS108-0-1-06D-2	61	IR95A-IS108-0-1-06D-2	NO
bis(2-Ethylhexyl)phthalate	6,670	35,000	3,500,000	--	24 - 24	1,600	IR95A-IS120-0-1-06D-2	78	IR95A-IS123-0-1-06D-2	NO
Pesticide/Polychlorinated Biphenyls (UG/KG)										
4,4'-DDD	129	2,400	240,000	--	2 - 24	3.5	IR95A-IS102-0-1-06D-2	2.1	IR95A-IS117-0-1-06D-2	NO
4,4'-DDE	--	1,700	170,000	--	5 - 24	10	IR95A-IS109-0-1-06D-2	4.6	IR95A-IS117-0-1-06D-2	NO
4,4'-DDT	1,360	1,700	170,000	--	4 - 24	4.5	IR95A-IS105-0-1-06D-2	2.6	IR95A-IS117-0-1-06D-2	NO
Endrin	440	18,000	1,800,000	--	2 - 24	12	IR95A-IS105-0-1-06D-2	4.6	IR95A-IS117-0-1-06D-2	NO
Endrin ketone	--	18,000	1,800,000	--	2 - 24	3.2	IR95A-IS120-0-1-06D-2	3.1	IR95A-IS117-0-1-06D-2	NO
Total Metals (MG/KG)										
Aluminum	--	76,000	7,600,000	8,965	24 - 24	7,510	IR95A-IS118-0-1-06D-2	669	IR95A-IS121-0-1-06D-2	NO
Arsenic	5.24	0.39	39	0.879	24 - 24	2.7	IR95A-IS113-0-1-06D-2	0.098	IR95A-IS121-0-1-06D-2	NO
Barium	848	5,400	540,000	19.4	24 - 24	34.2	IR95A-IS122-0-1-06D-2	2.2	IR95A-IS121-0-1-06D-2	NO
Beryllium	3.38	150	15,000	0.252	24 - 24	0.2	IR95A-IS122-0-1-06D-2	0.019	IR95A-IS121-0-1-06D-2	NO
Calcium	--	--	--	33,240	24 - 24	1,830	IR95A-IS122-0-1-06D-2	65.5	IR95A-IS121-0-1-06D-2	NO
Chromium	27.2	30	3,000	8.93	24 - 24	8.3	IR95A-IS118-0-1-06D-2	1.6	IR95A-IS102-0-1-06D-2	NO
Cobalt	--	900	90,000	0.412	21 - 24	1.1	IR95A-IS122-0-1-06D-2	0.11	IR95A-IS121-0-1-06D-2	NO
Copper	704	3,100	310,000	11.2	7 - 24	22.7	IR95A-IS113-0-1-06D-2	5.9	IR95A-IS104-0-1-06D-2	NO
Iron	151	23,000	2,300,000	6,097	24 - 24	9,390	IR95A-IS113-0-1-06D-2	385	IR95A-IS121-0-1-06D-2	NO
Lead	270	400	40,000	25.8	24 - 24	140	IR95A-IS113-0-1-06D-2	2.1	IR95A-IS121-0-1-06D-2	NO
Magnesium	--	--	--	804	24 - 24	1,890	IR95A-IS122-0-1-06D-2	38.1	IR95A-IS121-0-1-06D-2	NO
Manganese	65.2	1,800	180,000	43.8	24 - 24	62.7	IR95A-IS122-0-1-06D-2	2.2	IR95A-IS121-0-1-06D-2	NO
Mercury	0.015	23	2,300	0.120	6 - 24	0.18	IR95A-IS113-0-1-06D-2	0.024	IR95A-IS105-0-1-06D-2	NO
Nickel	56.4	1,600	160,000	1.65	22 - 24	4.7	IR95A-IS113-0-1-06D-2	0.37	IR95A-IS117-0-1-06D-2	NO
Potassium	--	--	--	384	15 - 24	831	IR95A-IS122-0-1-06D-2	73.5	IR95A-IS116-0-1-06D-2	NO
Silver	0.217	390	39,000	0.372	6 - 24	0.058	IR95A-IS106-0-1-06D-2	0.031	IR95A-IS107-0-1-06D-2	NO
Sodium	--	--	--	--	9 - 24	860	IR95A-IS122-0-1-06D-2	36.5	IR95A-IS101-0-1-06D-2	NO
Vanadium	--	78	7,800	28.5	24 - 24	12.1	IR95A-IS118-0-1-06D-2	1.6	IR95A-IS121-0-1-06D-2	NO
Zinc	550	23,000	2,300,000	31.2	12 - 24	75.6	IR95A-IS102-0-1-06D-2	9.2	IR95A-IS117-0-1-06D-2	NO

TABLE 4-6c
Human Health Risk Screening Step 1 - Jaybird Road Subsurface Soil
Site 95 Site Investigation
MCB Camp Lejeune, North Carolina

Station ID Sample ID Sample Date Chemical Name	NCSSL (May 2005)	Region 9 PRGs - Residential Soil	10^{-4} Cancer Risk Concentration	Background	Detection Frequency	Max Detect	SampleID of Maximum Detected Value	Minimum Detect Value	SampleID of Minimum Value	COPC
Volatile Organic Compounds (UG/KG)										
No Detections										
Semi-volatile Organic Compounds (UG/KG)										
Caprolactam	--	31,000,000	3,100,000,000	--	1 - 7	39	IR95A-IS103-3-4-06D-2	39	IR95A-IS103-3-4-06D-2	NO
Di-n-butylphthalate	24,800	6,100,000	610,000,000	--	7 - 7	61	IR95A-IS123-3-4-06D-2	43	IR95A-IS115-3-4-06D-2	NO
bis(2-Ethylhexyl)phthalate	6,670	35,000	3,500,000	--	7 - 7	430	IR95A-IS117-3-4-06D-2	86	IR95A-IS121-3-4-06D-2	NO
Pesticide/Polychlorinated Biphenyls (UG/KG)										
4,4'-DDE	--	1,700	170,000	--	2 - 7	2.6	IR95A-IS103-3-4-06D-2	2.5	IR95A-IS119-3-4-06D-2	NO
Total Metals (MG/KG)										
Aluminum	--	76,000	7,600,000	13,061	7 - 7	7,870	IR95A-IS121-3-4-06D-2	732	IR95A-IS119-3-4-06D-2	NO
Arsenic	5.24	0.39	39	5.29	7 - 7	1.3	IR95A-IS121-3-4-06D-2	0.14	IR95A-IS101-3-4-06D-2	NO
Barium	848	5,400	540,000	37.34	7 - 7	13.2	IR95A-IS121-3-4-06D-2	2.2	IR95A-IS119-3-4-06D-2	NO
Beryllium	3.38	150	15,000	0.432	7 - 7	0.094	IR95A-IS121-3-4-06D-2	0.021	IR95A-IS119-3-4-06D-2	NO
Calcium	--	--	--	944	7 - 7	308	IR95A-IS121-3-4-06D-2	51.6	IR95A-IS117-3-4-06D-2	NO
Chromium	27.2	30	3,000	30.9	7 - 7	9.6	IR95A-IS121-3-4-06D-2	1.8	IR95A-IS119-3-4-06D-2	NO
Cobalt	--	900	90,000	2.33	6 - 7	0.58	IR95A-IS121-3-4-06D-2	0.082	IR95A-IS119-3-4-06D-2	NO
Iron	151	23,000	2,300,000	16,984	7 - 7	3,370	IR95A-IS121-3-4-06D-2	331	IR95A-IS119-3-4-06D-2	NO
Lead	270	400	40,000	12.6	7 - 7	7	IR95A-IS103-3-4-06D-2	2.3	IR95A-IS101-3-4-06D-2	NO
Magnesium	--	--	--	1,022	7 - 7	264	IR95A-IS121-3-4-06D-2	28.3	IR95A-IS119-3-4-06D-2	NO
Manganese	65.2	1,800	180,000	23.6	7 - 7	15.8	IR95A-IS101-3-4-06D-2	1.8	IR95A-IS119-3-4-06D-2	NO
Nickel	56.4	1,600	160,000	4.73	6 - 7	2.3	IR95A-IS121-3-4-06D-2	0.46	IR95A-IS115-3-4-06D-2	NO
Potassium	--	--	--	1,043	4 - 7	342	IR95A-IS121-3-4-06D-2	101	IR95A-IS117-3-4-06D-2	NO
Silver	0.217	390	39,000	0.180	2 - 7	0.034	IR95A-IS103-3-4-06D-2	0.022	IR95A-IS121-3-4-06D-2	NO
Sodium	--	--	--	--	1 - 7	35.5	IR95A-IS101-3-4-06D-2	35.5	IR95A-IS101-3-4-06D-2	NO
Vanadium	--	78	7,800	44.7	7 - 7	11.8	IR95A-IS121-3-4-06D-2	2.1	IR95A-IS119-3-4-06D-2	NO
Zinc	550	23,000	2,300,000	21.5	1 - 7	12.3	IR95A-IS103-3-4-06D-2	12.3	IR95A-IS119-3-4-06D-2	NO

SECTION 5

Site 95 – Magnolia Road

5.1 Site Background

Site 95-Magnolia Road is located approximately 1,500 feet from the western bank of the New River. It is located off an unpaved road that branches north of Magnolia Road in a previously heavily wooded area that was cleared for sampling purposes (**Figure 1-2**). The dipping vat at this location is constructed of concrete and is roughly 25 feet long, 4 feet deep and 4 feet wide.

5.2 Previous Investigations

Initial assessment of the dipping vat at Magnolia Road was performed by Baker and is documented in the report *Suspected Dipping Vat Sampling and Suspected Asbestos Shingle/Transit Board Sampling* (Baker, 2004). Baker collected two soil samples inside the vat, which were analyzed for pesticides and RCRA metals. Detected arsenic concentrations exceeded Residential PRGs, the North Carolina Soil-to-Groundwater standard, and Base background concentrations. Detected mercury concentrations exceeded the North Carolina Soil-to-Groundwater standard and Base background concentration.

The *Suspected Dipping Vat Sampling and Suspected Asbestos Shingle/Transit Board Sampling* report indicated that the pesticides 4,4'-DDD, 4,4'-DDE, and 4,4'-DDT were detected at concentrations exceeding regulatory driven criteria in soil samples collected from the dipping vat at Site 95-Magnolia Road. Further review of the data by CH2M HILL revealed that the regulatory driven criteria were incorrectly reported and that pesticides were not detected at concentrations exceeding the criteria.

5.3 Site Investigation Activities

The investigation at Site 95 – Magnolia Road consisted of DPT, soil sampling, monitoring well installation, and groundwater sampling. Each activity is described in detail in the subsequent sections.

5.3.1 Monitoring Well Installation and Development

Three monitoring wells were installed at Site 95 – Magnolia Road at the locations shown on **Figure 2-2**. The monitoring well locations were selected to represent the entrance to the dipping vat (IR95B-MW02), the exit of the dipping vat (IR95B-MW01), and a downgradient (assumed) location (IR95B-MW03).

In July 2006, Probe Technology, Inc. drilled the shallow monitoring wells using four and one-quarter inch ID HSAs. Soils were logged by CH2M HILL's onsite geologist according to USCS. Soil descriptions included grain size, USCS symbol and classification, moisture

content, relative density or consistency, and any other relevant information such as evidence of contamination.

The wells were constructed, as directed by CH2M HILL's onsite geologist, using two-inch ID, Schedule 40, PVC well casing and screen materials. Ten feet of 0.010-inch slot well screen was used for each well. Well screens were installed to bisect the water table. The annular space around the well screen was backfilled with well-graded fine sand to approximately two feet above the top of the screened interval. An approximately two-foot thick bentonite seal was installed above the sand pack. The annular space above the bentonite seal was backfilled with cement and bentonite grout to prevent surface and near subsurface water from infiltrating into the screened groundwater-monitoring zone. Stick-up well covers, each with four protective bollards, were installed at each well and surrounded by a concrete pad.

Appendix D provides the soil boring logs and monitoring well construction diagrams for the wells installed at Site 95 – Magnolia Road.

Monitoring wells were developed using pumping and surging methods. Conductivity, pH, temperature, DO, ORP, and turbidity were monitored during development. Field measurements from well development are included in **Table 5-1**.

5.3.2 Geotechnical Analysis

One UD soil sample was collected from Site 95–Magnolia Road for geotechnical analysis. The UD soil sample was collected from IR95B-MW02 at a depth of 11 feet bgs to 12.75 feet bgs. The sample was sealed and transported to Geotechnics Geotechnical and Geosynthetic Laboratories in Raleigh, North Carolina for analysis of geotechnical parameters including permeability, porosity, and grain size distribution.

5.3.3 Groundwater Sampling

Once the new monitoring wells were installed and developed, a round of groundwater samples were collected as part of the SI field activities.

Depth-to-groundwater measurements were collected from the Site 95–Magnolia Road monitoring wells (**Table 3-2**). Measurements were collected from each well with a water-level probe prior to purging and sampling and converted to water-level elevations using the top-of-casing elevation survey data. These data were also used to determine groundwater flow direction.

Groundwater samples were collected from the three newly installed monitoring wells using a peristaltic pump and low flow sampling techniques on August 1, 2006. Well water was purged at a rate of 0.1 gpm. During purging, water quality parameters were measured using a Horiba U-22® water quality indicator. These parameters included conductivity, turbidity, DO, pH, temperature, and ORP. Field measurements from sampling are included on **Table 5-2**. At least one well volume was purged from each well prior to sampling. Groundwater samples were collected directly from disposable tubing into pre-preserved laboratory prepared sample bottles. Once collected in appropriately labeled containers, groundwater samples were immediately packed on ice in coolers and shipped via Federal Express delivery to Mitkem Corporation for analysis. Groundwater samples remained in the

presence of a CH2M HILL project representative until delivery to the Federal Express location. A chain-of-custody record was used to maintain a record of personnel who had control of the samples. The groundwater samples were analyzed for VOCs, SVOCs, PCBs, NAIPs, TAL metals, and pesticides in accordance with **Table 3-1**.

Groundwater chain-of-custody forms for the groundwater assessment are included in **Appendix E.**

5.3.4 Direct Push Technology Boring (Soil Sampling)

The Site 95 – Magnolia Road soil investigation consisted of gridded soil sampling using DPT. In October 2006, a total of 31 borings were advanced at the vat location and placed on approximately 20 foot centers near the vat, with slightly wider spacing in the surrounding areas, as shown on **Figure 5-1**. Continuous core soil samples were collected for visual description and VOC screening in disposable acetate sleeves using a macro-core soil sampler.

Surface soil samples were collected at each boring location from a depth interval of zero to one foot bgs for laboratory analysis. Seventeen subsurface soil samples were collected above the water table from a depth interval of three to four feet bgs for laboratory analysis. Once collected in appropriately labeled containers, soil samples were immediately packed on ice in coolers and shipped via Federal Express delivery to Mitkem Corporation for analysis. Soil samples remained in the presence of a CH2M HILL project representative until delivery to the Federal Express location. A chain-of-custody record was used to maintain a record of personnel who had control of the samples.

Soil samples were analyzed for VOCs, SVOCs, PCBs, TAL metals, and pesticides in accordance with **Table 3-1**.

Chain-of-custody forms for the soil assessment are included in **Appendix F**.

5.4 Site 95-Magnolia Road Soil and Hydrogeology

5.4.1 Lithologic Description

The geology of the investigation area at Site 95-Magnolia Road is consistent with the facility and regional geology. Three borings at Site 95-Magnolia Road were advanced to 15 feet bgs (IR95B-MW01, IR95B-MW-2, and IR95B-MW03), 14 borings were advanced to one foot bgs, and 17 borings were advanced to four feet bgs. Boring locations are shown on **Figure 5-1** and lithologic descriptions are provided in **Appendix D**. The surface soil from to one foot bgs is mostly composed of brown to gray silty sand or very fine to fine sand. The underlying soil is composed of tan to gray fine sands, which have varying amounts of silts and clays. Tan to gray clay lenses, ranging from 0.1 to 1 foot thick, are seen throughout the Site 95-Magnolia Road area at depths between 4 and 15 feet bgs.

5.4.2 Groundwater Characteristics

Groundwater elevations at the site ranged from 12.67 to 12.94 feet msl during the water level survey conducted at Site 95-Magnolia Road **(Table 3-2).** Data collected for this SI

indicate that the direction of groundwater flow is northeasterly across the site towards the New River (**Figure 5-2**), with an average gradient of 0.0072 feet/feet.

5.5 Analytical Results

Analytical results of the SI for Site 95-Magnolia Road are provided in **Appendix B**. Constituents detected at concentrations exceeding Base background concentrations and/or screening criteria in groundwater, surface soil, and subsurface soil are summarized in **Tables 5-3** through **5-5**, respectively. Surface and subsurface soil analytical results in exceedance of screening criteria are shown also shown on **Figures 5-3** and **5-4**, respectively.

5.5.1 Groundwater

Volatile Organic Compounds. VOCs were not detected at concentrations exceeding MDLs in the groundwater samples collected from Site 95-Magnolia Road monitoring wells.

Semi-Volatile Organic Compounds. SVOCs were not detected at concentrations exceeding MDLs in the groundwater samples collected from Site 95-Magnolia Road monitoring wells.

Pesticides/PCBs. One pesticide was detected in groundwater collected from Site 95-Magnolia Road monitoring wells. Site 95–Magnolia Road. Delta-BHC was detected in exceedance of the MDL in the groundwater sample collected from monitoring well IR95B-MW01, but did not exceed the NCGWQS. PCBs were not detected at concentrations exceeding MDLs in groundwater samples from Site 95-Magnolia Road.

Metals. Seven metals were detected in groundwater samples collected from the monitoring wells at Site 95-Magnolia Road at concentrations exceeding MDLs, but less than NCGWQS, including aluminum, antimony, cadmium, manganese, potassium, silver, and sodium. Iron was detected in exceedance of the NCGWQS in groundwater samples collected from monitoring well IR95B-MW01 at a concentration of 1,020 µg/L; however, this concentration is an order of magnitude less than the Base background concentration of 16,245.5 µg/L.

5.5.2 Surface Soil

Volatile Organic Compounds. VOCs were not detected at concentrations exceeding MDLs in surface soil samples collected from Site 95-Magnolia Road.

Semi-Volatile Organic Compounds. Eight SVOCs were detected at concentrations exceeding MDLs in surface soils collected from Site 95-Magnolia Road, including di-n-butylphthalate, bis(2-ethylhexyl)phthalate, benzaldehyde, benzo(a)pyrene, benzo(b)fluoranthene, chrysene, fluoranthene, and pyrene. However, SVOCs were not detected at concentrations in exceedance of screening criteria.

Pesticides/PCBs. Two pesticides, aldrin and endrin, were detected at concentrations exceeding MDLs in the surface soil samples collected from Site 95-Magnolia Road; however, neither pesticide was detected at concentrations in exceedance of screening criteria. PCBs were not detected at concentrations exceeding MDLs in surface soil samples collected from Site 95-Magnolia Road.

Metals. Fourteen metals were detected at concentrations exceeding MDLs, but less than screening criteria, in the surface soil samples collected from Site 95-Magnolia Road, including aluminum, antimony, barium, beryllium, calcium, chromium, cobalt, copper, lead, magnesium, nickel, potassium, silver, and vanadium. Arsenic concentrations detected in surface soil samples exceed the Residential PRG and Base background concentrations in 17 locations and the SSL in 9 locations, with a maximum concentration of 188 milligrams per kilograms (mg/kg) in the surface soil sample collected from IR95B-IS115, as shown on **Figure 5-3**. Arsenic concentrations in surface soil samples exceed the acceptable 10^{-4} cancer risk in three of these locations. Soil samples collected within the vat during Baker's investigation also indicated arsenic concentrations in exceedance of the 10^{-4} cancer risk. Detected iron concentrations in surface soil samples exceed the Residential PRG in 31 locations, but exceed the Base background concentration in the surface soil samples collected from only one of these locations, IR95B-IS101, at a concentration of 6,690 mg/kg. Iron concentrations detected in surface soil samples do not exceed the 10^{-4} cancer risk. Manganese and zinc are both detected at concentrations in exceedance of the Residential PRGs and the Base background concentrations in surface soil samples collected from one location each. Manganese is detected at a concentration of 82.6 mg/kg in the sample collected from IR95B-IS128 and zinc is detected at a concentration of 957 mg/kg in the sample collected from IR95B-IS103. Neither manganese nor zinc concentrations detected in surface soil samples exceed the 10^{-4} cancer risks at Site 95-Magnolia Road. Mercury is detected at concentrations in exceedance of the Residential PRG in 19 samples, but remains below the Base background concentration.

5.5.3 Subsurface Soil

Volatile Organic Compounds. Three VOCs, acetone, 2-butanone, and methylene, were detected at concentrations exceeding MDLs in subsurface soil samples collected from Site 95-Magnolia Road. VOCs were not detected at concentrations exceeding screening criteria.

Semi-Volatile Organic Compounds. Two SVOCs, bis(2-ethylhexyl)phthalate and di-n-butylphthalate, were detected at concentrations exceeding MDLs in the subsurface soil samples collected from Site 95-Magnolia Road; however, SVOCs were not detected at concentrations exceeding screening criteria.

Pesticides/PCBs. Pesticides and PCBs were not detected at concentrations exceeding MDLs in the subsurface soil samples collected from Site 95-Magnolia Road.

Metals. Eighteen metals were detected at concentrations exceeding MDLs, but less than screening criteria, in the subsurface soil samples collected from Site 95-Magnolia Road, including aluminum, antimony, barium, beryllium, cadmium, calcium, chromium, cobalt, copper, lead, magnesium, manganese, nickel, potassium, silver, sodium, vanadium, and zinc. Arsenic concentrations detected in subsurface soil samples exceed the Residential PRG and the SSL in 13 and 5 locations, respectively, with a maximum concentration of 436 mg/kg in the subsurface soil sample collected from IR95B-IS115. The Base background concentration is exceeded in five of these locations, as shown on **Figure 5-4**. Arsenic concentrations detected in subsurface soil samples exceed the 10^{-4} cancer risk in two of these locations. Iron is detected at concentrations exceeding the SSL at 15 locations, but remains below the Base background concentration. The mercury SSL is exceeded in the surface soil

sample collected from one location, IR95B-IS109; however, the detected mercury concentration is below the Base background concentration.

5.5.4 Geotechnical Test Results

The undisturbed sample collected from the IR95B-MW02 boring yielded the following results:

- The average permeability is 1.2E-04 cm/sec at 20 degrees Celsius
- The average specific gravity is 2.67 at 20 degrees Celsius
- The grain size ranges from 0.075 to 2.0 mm
- The USCS classification is SM.

Results of the geotechnical analysis are included in **Appendix G**.

5.6 Human Health Risk Screening (HHRS)

As shown on **Table 5-6a**, the maximum detected concentrations of all analytes in groundwater were below the NCGWQS, except iron, which was detected below the Base background concentration. Therefore, the detected iron concentrations are consistent with background conditions, rather than site releases. No COPCs are identified for Site 95-Magnolia Road groundwater.

As shown on **Table 5-6b**, the maximum detected concentrations of all organics, pesticides, and PCBs in surface soil were below Residential PRGs and SSLs. The maximum detected concentrations of the metals arsenic, iron, manganese, and zinc were detected in exceedance of the Residential PRGs and/or SSLs and Base background concentrations. Arsenic concentrations detected in surface soil exceed the acceptable 10^{-4} cancer risk; therefore, arsenic is identified as a COPC for Site 95-Magnolia Road surface soil. Although iron, manganese, and zinc were detected at concentrations exceeding screening levels, these metals are likely naturally occurring, based on known historical site activities. These metals will not be considered further. Mercury was detected in concentrations exceeding the Residential PRG, but below the Base background concentration.

As shown on **Table 5-6c**, the maximum detected concentrations of organics, pesticides, and PCBs in subsurface soil were below Residential PRGs and SSLs. The maximum detected concentration of the metal arsenic exceeds the Residential PRGs, SSL, and Base background concentration. As a result, arsenic is identified as a COPC for Site 95-Magnolia Road subsurface soil. The maximum detected concentrations of iron and mercury exceed the SSLs; however, neither metal was detected in exceedance of Base background concentrations.

5.7 Conclusions

Based on the results of the SI, arsenic concentrations in surface soil and subsurface soil at Site 95-Magnolia Road have been identified with the potential to pose unacceptable risks to exposed humans.

No unacceptable risks to humans exposed to constituents in groundwater at Site 95-Magnolia Road were identified.

Figures

\\aphrodite\projects\USNavFaceNGCom\315007CampLejeune\Projects\Site95\Figure5-1_Magnolia Road Site and Borings.mxd

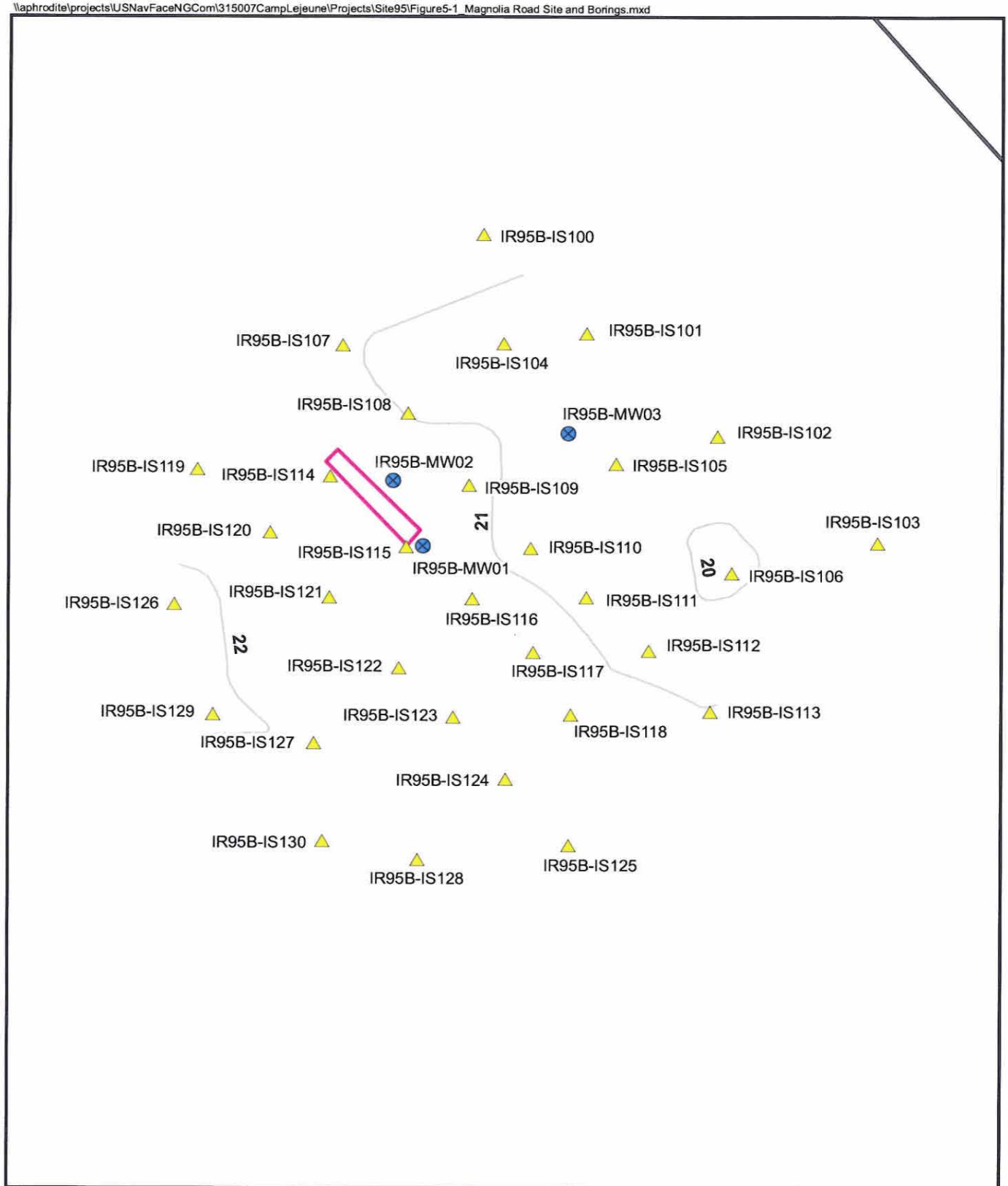

Legend

- Boring Locations
- Monitoring Wells
- Livestock Dipping Vat
- Road
- Surface Contours
- 12 Ground Surface Elevation (ft msl)

N
W E
S

0 15 30
Feet

Figure 5-1
Site 95 - Magnolia Road Boring Locations
Site 95 - Site Investigation
MCB Camp Lejeune, North Carolina

CH2MHILL

\\aphrodite\projects\USNavFaceNGCom\315007CampLejeune\Projects\Site95\Figure2-9_Magnolia Road Groundwater Contour Map.mxd

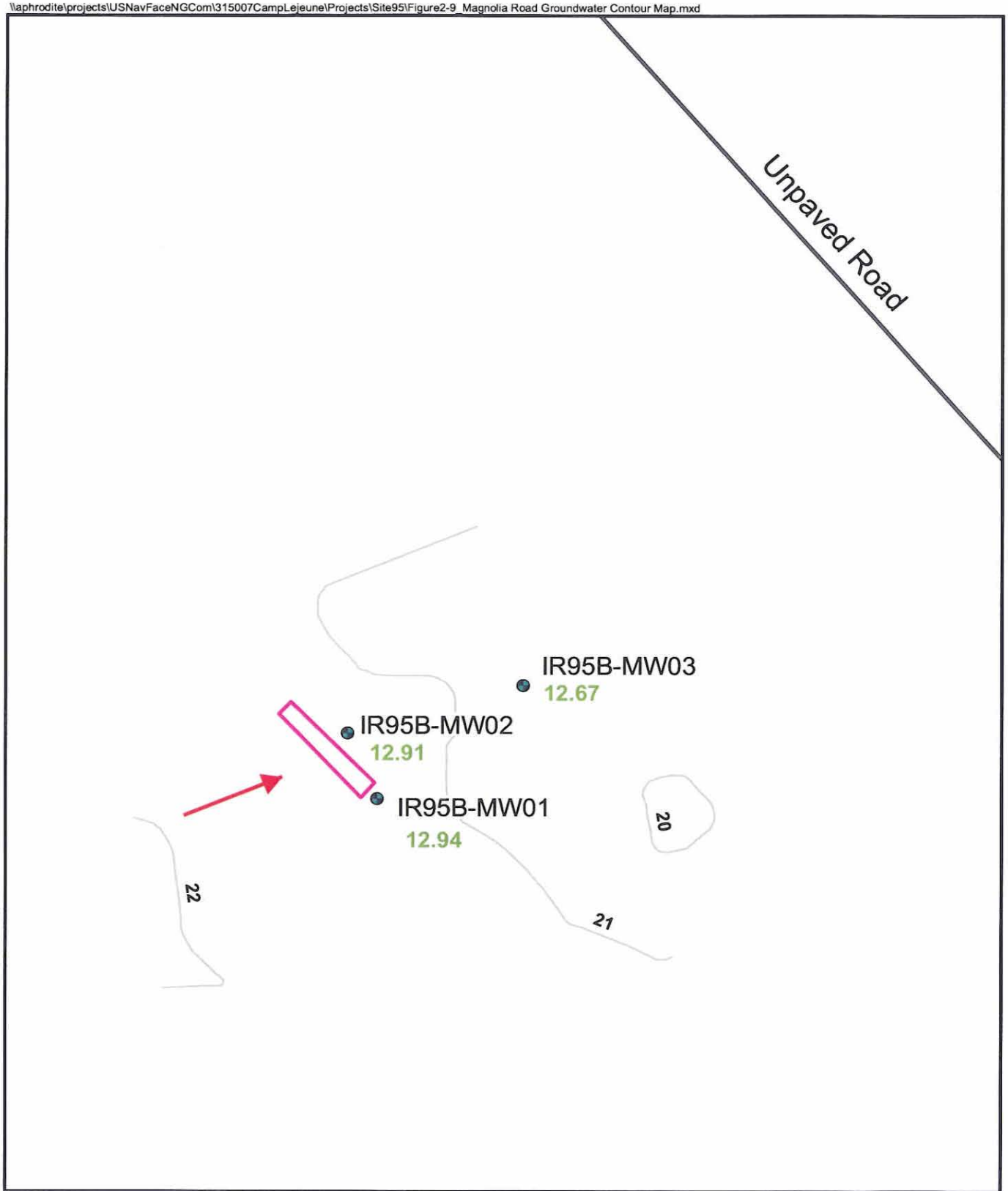

Legend

- Monitoring Wells
- Road
- Livestock Dipping Vat
- Surface Contours
- 12.91 Water level elevation (ft msl)
- Direction of Groundwater Flow

N
W E
S

0 15 30
Feet

Figure 5-2
Site 95 - Magnolia Road Groundwater Elevation Map
Site 95 - Site Investigation
MCB Camp Lejeune, North Carolina

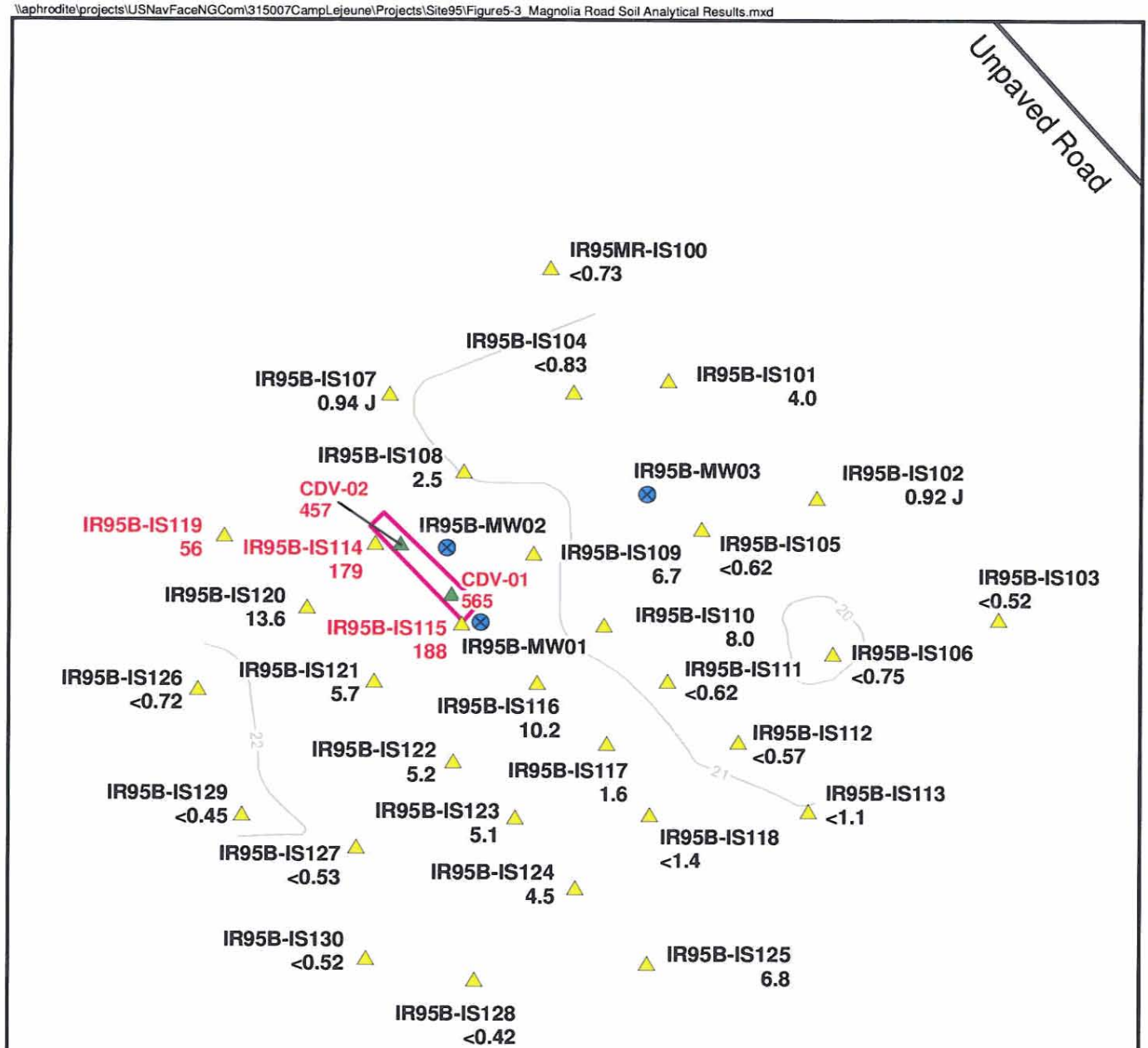

Arsenic Screening Criteria	
Surface Soil Background Concentration	0.879 mg/kg
NC SSL	5.24 mg/kg
Region 9 Residential PRG	0.39 mg/kg
10^{-4} Cancer Risk Concentration	39.0 mg/kg

Legend

- Monitoring Wells
- Soil Boring Locations
- Historical Boring Locations
- Livestock Dipping Vat
- Surface Contours
- Road

All concentration are reported in mg/kg.
J - Estimated Value
< - Arsenic was not detected above the corresponding detection limit.

IR95B-IS119 56 Surface Arsenic Exceedance of 10^{-4} Cancer Risk Concentration

0 15 30 Feet

N W E S

CH2MHILL

Figure 5-3
Site 95 - Magnolia Road Surface Soil Arsenic Results
Site 95 - Site Investigation
MCB Camp Lejeune, North Carolina

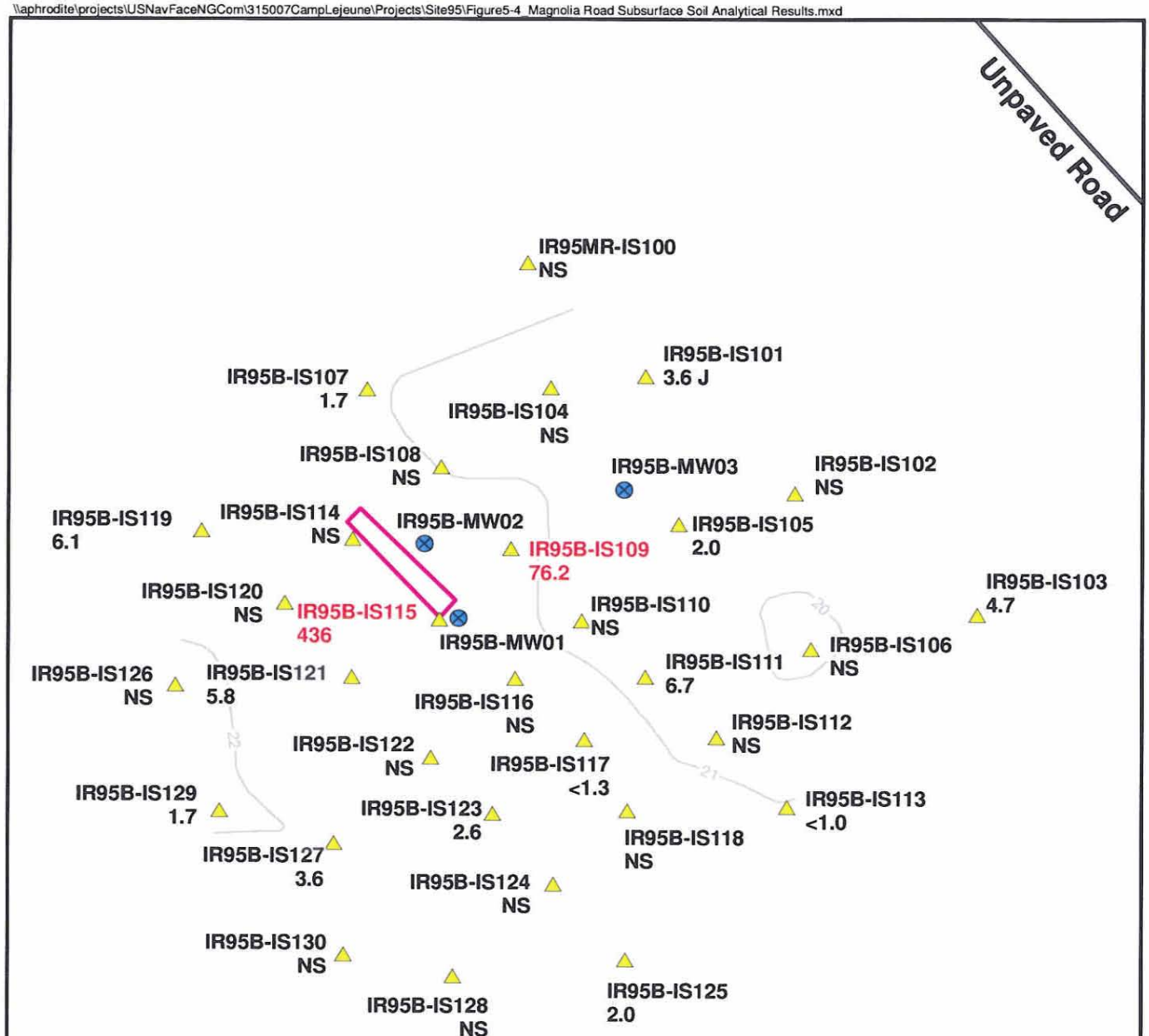

Arsenic Screening Criteria	
Surface Soil Background Concentration	5.29 mg/kg
NC SSL	5.24 mg/kg
Region 9 Residential PRG	0.39 mg/kg
10^{-4} Cancer Risk Concentration	39.0 mg/kg

Legend

- Soil Boring Locations
- Monitoring Wells
- Livestock Dipping Vat
- Surface Contours
- Road

IR95B-IS119 6.1 Subsurface Arsenic Exceedance of 10^{-4} Cancer Risk Concentration

All concentration are reported in mg/kg.
J - Estimated Value
NS - Not Sampled
< - Arsenic was not detected above the corresponding detection limit.

0 15 30 Feet

N W E S

Figure 5-4
Site 95 - Magnolia Road Subsurface Soil Arsenic Results
Site 95 - Site Investigation
MCB Camp Lejeune, North Carolina

CH2MHILL

Tables

Table 5-1
Water Quality Parameters Collected During Monitoring Well Development at Magnolia Road
Site 95 Site Investigation
MCB Camp Lejeune, North Carolina

Station ID	IR95B-MW01	IR95B-MW02	IR95B-MW03
Development Date	7/13/2006	7/13/2006	7/13/2006
Field Parameters			
Dissolved Oxygen (mg/l)	5.9	5.6	3.7
Oxidation Reduction Potential (mV)	272	354	351
pH	4.29	4.31	4.16
Specific Conductivity (ms/cm)	0.098	0.092	0.092
Temperature (C)	16.9	17.1	17.6
Turbidity (NTU)	9.99	9.08	9.98
Volume (gal)	55	55	55

Table 5-2
Water Quality Parameters Collected During Groundwater Sampling at Magnolia Road
Site 95 Site Investigation
MCB Camp Lejeune, North Carolina

Station ID	IR95B-MW01	IR95B-MW02	IR95B-MW03
Sample Date	8/1/2006	8/1/2006	8/1/2006
Field Parameters			
Dissolved Oxygen (mg/l)	1.9	2.5	2.73
Depth to Water (ft)	11.85	11.62	11.35
Oxidation Reduction Potential (mV)	186	278	400
pH	4.26	4.29	4.28
Specific Conductivity (ms/cm)	0.099	0.095	0.906
Temperature (C)	19.65	19.65	22.48
Turbidity (NTU)	156	187	12.5
Volume (gal)	3	3	3

TABLE 5-3

Concentrations of VOCs, SVOCs, Pesticides, PCBs, Metals, and Geochemical Parameters in Groundwater at Magnolia Road

Site 95 Site Investigation

MCB Camp Lejeune, North Carolina

Station ID	Units	**NC2LGW (May2005)**	IR95B-MW01	IR95B-MW02	IR95B-MW03
Sample ID			IR95B-GW01-06C	IR95B-GW02-06C	IR95B-GW03-06C
Sample Date			08/01/06	08/01/06	08/01/06
Chemical Name					
VOCs (µg/L)					
No Detections					
SVOCs (µg/L)					
No Detections					
PEST/PCBs (µg/L)					
delta-BHC	µg/L	0.019	0.0068 J	0.01 U	0.01 U
Total Metals (µg/L)					
Aluminum	µg/L	--	290	300	365
Antimony	µg/L	--	1.4 J	1.5 J	60 U
Cadmium	µg/L	1.75	0.12 J	5 U	5 U
Iron	µg/L	300	1,020	35.6 J	66.2 J
Manganese	µg/L	50	15 U	15 U	17.1
Potassium	µg/L	--	1,290 J	929 J	1,030 J
Silver	µg/L	17.5	0.92 J	10 U	10 U
Sodium	µg/L	--	9,460	8,840	8,510
Wet Chemistry (mg/L)					
Chloride	mg/L	250	13	17	14
Sulfate	mg/L	250	14	14	14
Total organic carbon (TOC)	mg/L	--	11	10 U	10 U

Notes:

U- Analyte not detected

J- Reported value is estimated

Shading represents exceedance of NC2L Groundwater criteria

VOCs- Volatile Organic Compounds

SVOCs- Semi- Volatile Organic Compounds

PEST/PCBs- Pesticides/Polychlorinated Biphenyls

TABLE 5-4
Concentrations of VOCs, SVOCs, Pesticides, PCBs, and Metals in Surface Soil at Magnolia Road
Site 95 Site Investigation
MCB Camp Lejeune, North Carolina

Station ID	Units	Surface Soil BaseWide Background 2002	Region 9 PRGs - Residential Soil	10^{-4} Cancer Risk Concentration	NCSSL (May2005)	IR95B-IS100	IR95B-IS101	IR95B-IS102	IR95B-IS103	IR95B-IS104	IR95B-IS105	IR95B-IS106	IR95B-IS107		IR95B-IS108
Sample ID						IR95B-IS100-0-1-06D-2	IR95B-IS101-0-1-06D-2	IR95B-IS102-0-1-06D-2	IR95B-IS103-0-1-06D-2	IR95B-IS104-0-1-06D-2	IR95B-IS105-0-1-06D-2	IR95B-IS106-0-1-06D-2	IR95B-IS107-0-1-06D-2	IR95B-IS107D-0-1-06D-2	IR95B-IS108-0-1-06D-2
Sample Date						10/05/06	10/05/06	10/05/06	10/05/06	10/05/06	10/05/06	10/05/06	10/05/06	10/05/06	10/05/06
Chemical Name															
VOCs (µg/kg)															
Acetone	µg/kg	--	14,000,000	1,400,000,000	2,810	NA	NA	NA	NA	NA	NA	NA	NA	NA	NA
Trichlorofluoromethane(Freon-11)	µg/kg	--	390,000	39,000,000	31,500	NA	NA	NA	NA	NA	NA	NA	NA	NA	NA
SVOCs (µg/kg)															
4-Methylphenol	µg/kg	--	310,000	31,000,000	17.4	400 U	390 U	410 U	410 U	400 U	370 U	380 U	400 U	400 U	410 U
Acenaphthylene	µg/kg	--	56,000	5,600,000	11,400	400 U	390 U	410 U	410 U	400 U	370 U	380 U	400 U	400 U	410 U
Anthracene	µg/kg	--	22,000,000	2,200,000,000	995,000	400 U	390 U	410 U	410 U	400 U	370 U	380 U	400 U	400 U	410 U
Benzaldehyde	µg/kg	--	6,100,000	610,000,000	--	400 U	390 U	410 U	410 U	400 U	370 U	380 U	400 U	400 U	410 U
Benzo(a)anthracene	µg/kg	--	620	62,000	343	400 U	390 U	410 U	410 U	400 U	370 U	380 U	400 U	400 U	410 U
Benzo(a)pyrene	µg/kg	--	62	6,200	92.8	400 U	390 U	410 U	410 U	400 U	370 U	380 U	400 U	400 U	410 U
Benzo(b)fluoranthene	µg/kg	--	620	62,000	1,180	400 U	390 U	410 U	410 U	400 U	370 U	380 U	400 U	400 U	410 U
Benzo(g,h,i)perylene	µg/kg	--	2,300,000	230,000,000	6,720,000	400 U	390 U	410 U	410 U	400 U	370 U	380 U	400 U	400 U	410 U
Benzo(k)fluoranthene	µg/kg	--	6,200	620,000	11,800	400 U	390 U	410 U	410 U	400 U	370 U	380 U	400 U	400 U	410 U
Chrysene	µg/kg	--	62,000	6,200,000	38,150	400 U	390 U	410 U	410 U	400 U	370 U	380 U	400 U	400 U	410 U
Di-n-butylphthalate	µg/kg	--	6,100,000	610,000,000	24,800	400 U	390 U	410 U	410 U	400 U	370 U	380 U	400 U	400 U	410 U
Fluoranthene	µg/kg	--	2,300,000	230,000,000	276,000	400 U	390 U	410 U	410 U	400 U	370 U	380 U	400 U	400 U	410 U
Indeno(1,2,3-cd)pyrene	µg/kg	--	620	62,000	3,320	400 U	390 U	410 U	410 U	400 U	370 U	380 U	400 U	400 U	410 U
Phenanthrene	µg/kg	--	2,300,000	230,000,000	59,600	400 U	390 U	410 U	410 U	400 U	370 U	380 U	400 U	400 U	410 U
Pyrene	µg/kg	--	2,300,000	230,000,000	286,000	400 U	390 U	410 U	410 U	400 U	370 U	380 U	400 U	400 U	410 U
bis(2-Ethylhexyl)phthalate	µg/kg	--	35,000	3,500,000	6,670	52 J	79 J	98 J	74 J	58 J	490	53 J	68 J	59 J	69 U
PEST/PBCs (µg/kg)															
4,4'-DDD	µg/kg	--	2,400	240,000	129	4 U	3.9 U	4.1 U	4.1 U	4 U	3.7 U	3.7 U	4 U	3.9 U	4.1 U
4,4'-DDE	µg/kg	--	1,700	170,000	--	4 U	3.9 U	4.1 U	4.1 U	4 U	3.7 U	3.7 U	4 U	3.9 U	4.1 U
4,4'-DDT	µg/kg	--	1,700	170,000	1,360	4 U	3.9 U	4.1 U	4.1 U	4 U	3.7 U	3.7 U	4 U	3.9 U	4.1 U
Aldrin	µg/kg	--	29	2,900	--	2 U	2 U	2.1 U	2.1 U	2.1 U	1.9 U	1.9 U	2 U	2 U	2.1 U
Endosulfan sulfate	µg/kg	--	370,000	37,000,000	--	4 U	3.9 U	4.1 U	4.1 U	4 U	3.7 U	3.7 U	4 U	3.9 U	4.1 U
Endrin	µg/kg	--	18,000	1,800,000	440	4 U	3.9 U	4.1 U	4.1 U	4 U	3.7 U	3.7 U	4 U	3.9 U	4.1 U
Endrin aldehyde	µg/kg	--	18,000	1,800,000	--	4 U	3.9 U	4.1 U	4.1 U	4 U	3.7 U	3.7 U	4 U	3.9 U	4.1 U
Endrin ketone	µg/kg	--	18,000	1,800,000	--	4 U	3.9 U	4.1 U	4.1 U	4 U	3.7 U	3.7 U	4 U	3.9 U	4.1 U
Heptachlor epoxide	µg/kg	--	53	5,300	6.34	2 U	2 U	2.1 U	2.1 U	2.1 U	1.9 U	1.9 U	2 U	2 U	2.1 U
alpha-Chlordane	µg/kg	--	1,600	160,000	--	2 U	2 U	2.1 U	2.1 U	2.1 U	1.9 U	1.9 U	2 U	2 U	2.1 U
gamma-Chlordane	µg/kg	--	1,600	160,000	--	2 U	2 U	2.1 U	2.1 U	2.1 U	1.9 U	1.9 U	2 U	2 U	2.1 U
Total Metals (mg/kg)															
Aluminum	mg/kg	8,965	76,000	7,600,000	--	6,160 J	13,000 J	4,400 J	4,410 J	4,290 J	4,550 J	3,840 J	3,520 J	3,430 J	3,950
Antimony	mg/kg	0.564	31	3,100	5.42	0.28 UJ	4.8 UJ	0.21 UJ	0.38 UJ	0.17 UJ	0.19 UJ	0.25 UJ	0.096 UJ	0.24 UJ	5.2 UJ
Arsenic	mg/kg	0.879	0.39	39	5.24	0.73 UJ	***4 J-***	***0.92 J-***	0.52 UJ	0.83 UJ	0.62 UJ	0.75 UJ	0.99 UJ	***0.94 J-***	**2.5**
Barium	mg/kg	19.4	5,400	540,000	848	26.6 J	23.4 J	15.6 J	12.3 J	21 J	21.4 J	10.7 J	11 J	12.8 J	20.5
Beryllium	mg/kg	0.252	150	15,000	3.38	0.09 J	0.14 J	0.084 J	0.063 J	0.071 J	0.065 J	0.054 J	0.051 J	0.047 J	0.064 J
Calcium	mg/kg	33,240	--	--	--	901 J-	601 J-	734 J-	1,030 J-	933 J-	562 J-	2,160 J-	419 J-	719 J-	934
Chromium	mg/kg	8.93	30	3,000	27.2	4.6 J-	17.8 J	4.5 J-	4 UJ	4.1 J-	3.5 J-	3.3 UJ	2.8 J-	2.9 J-	4.4
Cobalt	mg/kg	0.412	900	90,000	--	0.21 U	0.52 J	0.15 U	0.16 U	0.27 U	0.19 U	0.21 U	0.12 U	0.14 U	0.25 J
Copper	mg/kg	11.2	3,100	310,000	704	4.9 U	5.5 U	4.1 U	97.3	5.9 U	12.7	4.5 U	4 U	4.3 U	6.1
Iron	mg/kg	6,097	23,000	2,300,000	151	1,670 J	6,690 J	1,270 J	1,150 J	1,440 J	986 J	1,060 J	1,000 J	1,030 J	4,990
Lead	mg/kg	25.8	400	40,000	270	24 J	11.4 J	11.4 J	10.3 J	22.4 J	9.8 J	4 J	7.4 J	8 J	21.1 J
Magnesium	mg/kg	804	--	--	--	230 J	656 J	158 J	157 J	198 J	180 J	186 J	144 J	163 J	210 J
Manganese	mg/kg	43.8	1,800	180,000	65.2	19.9 J	9.6 J	12.2 J	8.9 J	27.6 J	18.4 J	14.1 J	7.2 J	15 J	43.4 J
Mercury	mg/kg	0.12	23	2,300	0.015	0.041 J	0.11 U	0.028 J	0.027 J	0.043 J	0.098 U	0.099 U	0.027 J	0.025 J	0.059 J
Nickel	mg/kg	1.65	1,600	160,000	56.4	1.3 J	2.1 J	0.97 J	1.3 J	1.2 J	0.85 J	1.5 J	0.74 J	0.81 J	1.1 J
Potassium	mg/kg	384	--	--	--	229 J	658 J	161 J	150 J	212 J	168 J	148 J	134 J	143 J	210 J
Silver	mg/kg	0.372	390	39,000	0.217	0.87 U	0.8 U	0.85 U	0.88 U	0.88 U	0.79 U	0.82 U	0.89 U	0.86 U	0.86 U
Sodium	mg/kg	--	--	--	--	29.7 U	38.8 U	44 U	88.8 U	36.8 U	29.8 U	31.8 U	35.9 U	29.5 U	28.3 U
Vanadium	mg/kg	28.5	78	7,800	--	6 J	24.3 J	4.7 J	4.8 J	5.1 J	4.4 J	4.6 J	4.2 J	4.3 J	5.8
Zinc	mg/kg	31.2	23,000	2,300,000	550	24.9	21.1	9.3	957	33.9	12.2	9.5	9.7	13.7	26.9

Notes:
Shading Exceeds NCSSLs (North Carolina Soil Screening Levels)
Bold Frame Exceeds Basewide Background Concentrations
Bold and Italicized Exceeds Region 9 PRGs
Highlighting Exceeds Risk Based Concentrations (based on 10^{-4} Target Cancer Risk)
U- Analyte not detected
J- Reported value is estimated
J- - Reported value is biased low
UJ- Analyte not detected. Quantiation limit is imprecise
NA- Not analyzed
VOCs- Volatile Organic Compounds
SVOCs- Semi-Volatile Organic Compounds
PEST/PCBs- Pesticide/Polychlorinated Biphenyls

TABLE 5-4
Concentrations of VOCs, SVOCs, Pesticides, PCBs, and Metals in Surface Soil at Magnolia Road
Site 95 Site Investigation
MCB Camp Lejeune, North Carolina

Station ID	Units	Surface Soil BaseWide Background 2002	Region 9 PRGs - Residential Soil	10^{-4} Cancer Risk Concentration	NCSSL (May2005)	IR95B-IS109	IR95B-IS110	IR95B-IS111	IR95B-IS112	IR95B-IS113	IR95B-IS114		IR95B-IS115	
Sample ID						IR95B-IS109-0-1-06D-2	IR95B-IS110-0-1-06D-2	IR95B-IS111-0-1-06D-2	IR95B-IS112-0-1-06D-2	IR95B-IS113-0-1-06D-2	IR95B-IS114-0-1-06D-1	IR95B-IS114-0-1-06D-2	IR95B-IS115-0-1-06D-1	IR95B-IS115-0-1-06D-2
Sample Date						10/05/06	10/05/06	10/05/06	10/05/06	10/05/06	10/03/06	10/05/06	10/03/06	10/05/06
Chemical Name														
VOCs (µg/kg)														
Acetone	µg/kg	--	14,000,000	1,400,000,000	2,810	NA	NA	NA	NA	NA	10 U	NA	14 U	NA
Trichlorofluoromethane(Freon-11)	µg/kg	--	390,000	39,000,000	31,500	NA	NA	NA	NA	NA	10 UJ	NA	14 UJ	NA
SVOCs (µg/kg)														
4-Methylphenol	µg/kg	--	310,000	31,000,000	17.4	390 U	380 U	380 U	390 U	400 U	NA	380 U	NA	360 U
Acenaphthylene	µg/kg	--	56,000	5,600,000	11,400	390 U	380 U	380 U	390 U	400 U	NA	380 U	NA	360 U
Anthracene	µg/kg	--	22,000,000	2,200,000,000	995,000	390 U	380 U	380 U	390 U	400 U	NA	380 U	NA	360 U
Benzaldehyde	µg/kg	--	6,100,000	610,000,000	--	390 U	380 U	380 U	390 U	400 U	NA	380 UJ	NA	360 UJ
Benzo(a)anthracene	µg/kg	--	620	62,000	343	390 U	380 U	380 U	390 U	400 U	NA	380 U	NA	360 U
Benzo(a)pyrene	µg/kg	--	62	6,200	92.8	390 U	380 U	380 U	390 U	400 U	NA	380 U	NA	360 U
Benzo(b)fluoranthene	µg/kg	--	620	62,000	1,180	390 U	380 U	380 U	390 U	400 U	NA	380 U	NA	360 U
Benzo(g,h,i)perylene	µg/kg	--	2,300,000	230,000,000	6,720,000	390 U	380 U	380 U	390 U	400 U	NA	380 U	NA	360 U
Benzo(k)fluoranthene	µg/kg	--	6,200	620,000	11,800	390 U	380 U	380 U	390 U	400 U	NA	380 U	NA	360 U
Chrysene	µg/kg	--	62,000	6,200,000	38,150	390 U	380 U	380 U	390 U	400 U	NA	380 U	NA	360 U
Di-n-butylphthalate	µg/kg	--	6,100,000	610,000,000	24,800	390 U	380 U	380 U	390 U	400 U	NA	65 J	NA	67 J
Fluoranthene	µg/kg	--	2,300,000	230,000,000	276,000	390 U	380 U	380 U	390 U	400 U	NA	380 U	NA	360 U
Indeno(1,2,3-cd)pyrene	µg/kg	--	620	62,000	3,320	390 U	380 U	380 U	390 U	400 U	NA	380 U	NA	360 U
Phenanthrene	µg/kg	--	2,300,000	230,000,000	59,600	390 U	380 U	380 U	390 U	400 U	NA	380 U	NA	360 U
Pyrene	µg/kg	--	2,300,000	230,000,000	286,000	390 U	380 U	380 U	390 U	400 U	NA	380 U	NA	360 U
bis(2-Ethylhexyl)phthalate	µg/kg	--	35,000	3,500,000	6,670	48 U	59 U	58 U	72 U	210 U	NA	120 U	NA	110 U
PEST/PBCs (µg/kg)														
4,4'-DDD	µg/kg	--	2,400	240,000	129	3.8 U	3.7 U	3.8 U	3.9 U	4 U	NA	3.8 U	NA	3.7 U
4,4'-DDE	µg/kg	--	1,700	170,000	--	3.8 U	3.7 U	3.8 U	3.9 U	4 U	NA	3.8 U	NA	3.7 U
4,4'-DDT	µg/kg	--	1,700	170,000	1,360	3.8 U	3.7 U	3.8 U	3.9 U	4 U	NA	3.8 U	NA	3.7 U
Aldrin	µg/kg	--	29	2,900	--	2 U	1.9 U	1.9 U	2 U	2 U	NA	2 U	NA	1.9 U
Endosulfan sulfate	µg/kg	--	370,000	37,000,000	--	3.8 U	3.7 U	3.8 U	3.9 U	4 U	NA	3.8 U	NA	3.7 U
Endrin	µg/kg	--	18,000	1,800,000	440	3.8 U	2.4 J	3.8 U	3.9 U	4 U	NA	3.8 U	NA	3.7 U
Endrin aldehyde	µg/kg	--	18,000	1,800,000	--	3.8 U	3.7 U	3.8 U	3.9 U	4 U	NA	3.8 U	NA	3.7 U
Endrin ketone	µg/kg	--	18,000	1,800,000	--	3.8 U	3.7 U	3.8 U	3.9 U	4 U	NA	3.8 U	NA	3.7 U
Heptachlor epoxide	µg/kg	--	53	5,300	6.34	2 U	1.9 U	1.9 U	2 U	2 U	NA	2 U	NA	1.9 U
alpha-Chlordane	µg/kg	--	1,600	160,000	--	2 U	1.9 U	1.9 U	2 U	2 U	NA	2 U	NA	1.9 U
gamma-Chlordane	µg/kg	--	1,600	160,000	--	2 U	1.9 U	1.9 U	2 U	2 U	NA	2 U	NA	1.9 U
Total Metals (mg/kg)														
Aluminum	mg/kg	8.965	76,000	7,600,000	--	3,670	2,780	2,450	2,920	3,770	NA	7,410 J	NA	4,080 J
Antimony	mg/kg	0.564	31	3,100	5.42	0.27 UJ	0.27 UJ	0.23 UJ	0.28 UJ	0.28 UJ	NA	2.2 J	NA	0.41 UJ
Arsenic	mg/kg	0.879	0.39	39	5.24	*6.7*	*8*	0.62 U	0.57 U	1.1 U	NA	*179*	NA	*188*
Barium	mg/kg	19.4	5,400	540,000	848	14.4 J	10.9 J	7.7 J	9.8 J	17.5	NA	14.8 J	NA	31.7
Beryllium	mg/kg	0.252	150	15,000	3.38	0.05 J	0.038 U	0.035 U	0.04 U	0.067 J	NA	0.095 J	NA	0.06 J
Calcium	mg/kg	33,240	--	--	--	311 J	340 J	352 J	514	440	NA	718	NA	617
Chromium	mg/kg	8.93	30	3,000	27.2	2.8	2.5	2.3	2.5	4.2	NA	10.2 J	NA	3.3 J
Cobalt	mg/kg	0.412	900	90,000	--	0.12 U	0.13 U	0.1 U	0.13 U	0.15 U	NA	0.55 J	NA	0.25 J
Copper	mg/kg	11.2	3,100	310,000	704	3.5 U	3.4 U	18.2	3.5 U	4.3 U	NA	4.5 U	NA	4.2 U
Iron	mg/kg	6,097	23,000	2,300,000	151	993	686	569	677	1,190	NA	2,900 J	NA	1,360 J
Lead	mg/kg	25.8	400	40,000	270	8.3 J	4.5 J	3.6 J	4.6 J	11.2 J	NA	9.7	NA	11.4
Magnesium	mg/kg	804	--	--	--	139 J	123 J	104 J	116 J	150 J	NA	380 J	NA	165 J
Manganese	mg/kg	43.8	1,800	180,000	65.2	7.6 J	12.1 J	8 J	11.2 J	13 J	NA	11.2 J	NA	9.8 J
Mercury	mg/kg	0.12	23	2,300	0.015	0.044 J	0.094 U	0.018 J	0.1 U	0.063 J	NA	0.1 U	NA	0.11
Nickel	mg/kg	1.65	1,600	160,000	56.4	0.66 J	0.55 J	0.56 J	0.84 J	0.74 J	NA	1.3 J	NA	0.91 J
Potassium	mg/kg	384	--	--	--	168 J	139 J	100 J	129 J	141 J	NA	377 J	NA	171 J
Silver	mg/kg	0.372	390	39,000	0.217	0.8 U	0.81 U	0.79 U	0.79 U	0.87 U	NA	0.026 U	NA	0.76 U
Sodium	mg/kg	--	--	--	--	22.9 U	26.2 U	19.7 U	25.2 U	26.4 U	NA	43.1 U	NA	29.2 U
Vanadium	mg/kg	28.5	78	7,800	--	3.7 J	3.4 J	2.8 J	3.2 J	3.6 J	NA	13.4	NA	4.3
Zinc	mg/kg	31.2	23,000	2,300,000	550	9 U	6.3 U	25.9	6.1 U	10 U	NA	9.8 U	NA	18.2

Notes:
Shading Exceeds NCSSLs (North Carolina Soil Screening Levels)
Bold Frame Exceeds Basewide Background Concentrations
Bold and Italicized Exceeds Region 9 PRGs
Highlighting Exceeds Risk Based Concentrations (based on 10^{-4} Target Cancer Risk)
U- Analyte not detected
J- Reported value is estimated
J- - Reported value is biased low
UJ- Analyte not detected. Quantiation limit is imprecise
NA- Not analyzed
VOCs- Volatile Organic Compounds
SVOCs- Semi-Volatile Organic Compounds
PEST/PCBs- Pesticide/Polychlorinated Biphenyls

TABLE 5-4
Concentrations of VOCs, SVOCs, Pesticides, PCBs, and Metals in Surface Soil at Magnolia Road
Site 95 Site Investigation
MCB Camp Lejeune, North Carolina

Station ID	Units	Surface Soil BaseWide Background 2002	Region 9 PRGs - Residential Soil	10^{-4} Cancer Risk Concentration	NCSSL (May2005)	IR95B-IS115	IR95B-IS116		IR95B-IS117	IR95B-IS118	IR95B-IS119	IR95B-IS120	IR95B-IS121	IR95B-IS122
Sample ID						IR95B-IS115D-0-1-06D-2	IR95B-IS116-0-1-06D-1	IR95B-IS116-0-1-06D-2	IR95B-IS117-0-1-06D-2	IR95B-IS118-0-1-06D-2	IR95B-IS119-0-1-06D-2	IR95B-IS120-0-1-06D-2	IR95B-IS121-0-1-06D-2	IR95B-IS122-0-1-06D-2
Sample Date						10/05/06	10/03/06	10/05/06	10/05/06	10/05/06	10/05/06	10/05/06	10/05/06	10/05/06
Chemical Name														
VOCs (µg/kg)														
Acetone	µg/kg	--	14,000,000	1,400,000,000	2,810	NA	12 U	NA	NA	NA	NA	NA	NA	NA
Trichlorofluoromethane(Freon-11)	µg/kg	--	390,000	39,000,000	31,500	NA	12 UJ	NA	NA	NA	NA	NA	NA	NA
SVOCs (µg/kg)														
4-Methylphenol	µg/kg	--	310,000	31,000,000	17.4	360 U	NA	360 U	370 U	380 U	360 U	400 U	400 U	390 U
Acenaphthylene	µg/kg	--	56,000	5,600,000	11,400	360 U	NA	360 U	370 U	380 U	360 U	400 U	400 U	390 U
Anthracene	µg/kg	--	22,000,000	2,200,000,000	995,000	360 U	NA	360 U	370 U	380 U	360 U	400 U	400 U	390 U
Benzaldehyde	µg/kg	--	6,100,000	610,000,000	--	360 U	NA	37 J	370 U	380 U	360 U	110 J	82 J	92 J
Benzo(a)anthracene	µg/kg	--	620	62,000	343	360 U	NA	360 U	370 U	380 U	360 U	400 U	400 U	390 U
Benzo(a)pyrene	µg/kg	--	62	6,200	92.8	360 U	NA	360 U	370 U	380 U	360 U	400 U	400 U	390 U
Benzo(b)fluoranthene	µg/kg	--	620	62,000	1,180	360 U	NA	360 U	370 U	380 U	360 U	400 U	400 U	390 U
Benzo(g,h,i)perylene	µg/kg	--	2,300,000	230,000,000	6,720,000	360 U	NA	360 U	370 U	380 U	360 U	400 U	400 U	390 U
Benzo(k)fluoranthene	µg/kg	--	6,200	620,000	11,800	360 U	NA	360 U	370 U	380 U	360 U	400 U	400 U	390 U
Chrysene	µg/kg	--	62,000	6,200,000	38,150	360 U	NA	360 U	370 U	380 U	360 U	400 U	400 U	390 U
Di-n-butylphthalate	µg/kg	--	6,100,000	610,000,000	24,800	40 J	NA	71 J	82 J	47 J	38 J	80 J	65 J	61 J
Fluoranthene	µg/kg	--	2,300,000	230,000,000	276,000	360 U	NA	360 U	370 U	380 U	360 U	400 U	400 U	390 U
Indeno(1,2,3-cd)pyrene	µg/kg	--	620	62,000	3,320	360 U	NA	360 U	370 U	380 U	360 U	400 U	400 U	390 U
Phenanthrene	µg/kg	--	2,300,000	230,000,000	59,600	360 U	NA	360 U	370 U	380 U	360 U	400 U	400 U	390 U
Pyrene	µg/kg	--	2,300,000	230,000,000	286,000	360 U	NA	360 U	370 U	380 U	360 U	400 U	400 U	390 U
bis(2-Ethylhexyl)phthalate	µg/kg	--	35,000	3,500,000	6,670	310 J	NA	570 U	190 U	190 U	120 U	370 U	100 U	110 U
PEST/PBCs (µg/kg)														
4,4'-DDD	µg/kg	--	2,400	240,000	129	3.6 U	NA	3.7 U	3.7 U	3.8 U	3.6 U	3.9 U	4 U	4 U
4,4'-DDE	µg/kg	--	1,700	170,000	--	3.6 U	NA	3.7 U	3.7 U	3.8 U	3.6 U	3.9 U	4 U	4 U
4,4'-DDT	µg/kg	--	1,700	170,000	1,360	3.6 U	NA	3.7 U	3.7 U	3.8 U	3.6 U	3.9 U	4 U	4 U
Aldrin	µg/kg	--	29	2,900	--	1.8 U	NA	1.9 U	1.9 U	1.9 U	1.9 U	2 U	2.1 U	2.8 J
Endosulfan sulfate	µg/kg	--	370,000	37,000,000	--	3.6 U	NA	3.7 U	3.7 U	3.8 U	3.6 U	3.9 U	4 U	4 U
Endrin	µg/kg	--	18,000	1,800,000	440	3.6 U	NA	3.1 J	2.5 J	3.8 U	3.6 U	3.9 U	4 U	16 J
Endrin aldehyde	µg/kg	--	18,000	1,800,000	--	3.6 U	NA	3.7 U	3.7 U	3.8 U	3.6 U	3.9 U	4 U	4 U
Endrin ketone	µg/kg	--	18,000	1,800,000	--	3.6 U	NA	3.7 U	3.7 U	3.8 U	3.6 U	3.9 U	4 U	4 U
Heptachlor epoxide	µg/kg	--	53	5,300	6.34	1.8 U	NA	1.9 U	1.9 U	1.9 U	1.9 U	2 U	2.1 U	2 U
alpha-Chlordane	µg/kg	--	1,600	160,000	--	1.8 U	NA	1.9 U	1.9 U	1.9 U	1.9 U	2 U	2.1 U	2 U
gamma-Chlordane	µg/kg	--	1,600	160,000	--	1.8 U	NA	1.9 U	1.9 U	1.9 U	1.9 U	2 U	2.1 U	2 U
Total Metals (mg/kg)														
Aluminum	mg/kg	8,965	76,000	7,600,000	--	3,120	NA	2,820 J	3,540 J	3,070 J	2,620 J	4,230 J	2,590 J	2,490 J
Antimony	mg/kg	0.564	31	3,100	5.42	0.38 UJ	NA	0.34 UJ	0.24 UJ	0.34 UJ	0.31 UJ	0.57 UJ	0.39 UJ	0.36 UJ
Arsenic	mg/kg	0.879	0.39	39	5.24	***117***	NA	***10.2***	***1.6***	1.4 U	***56***	***13.6***	***5.7***	**5.2**
Barium	mg/kg	19.4	5,400	540,000	848	23.8	NA	15.6 J	23.6	14.8 J	8.8 J	15.7 J	12.5 J	9.4 J
Beryllium	mg/kg	0.252	150	15,000	3.38	0.029 U	NA	0.044 J	0.07 J	0.058 J	0.05 J	0.06 J	0.039 J	0.041 J
Calcium	mg/kg	33,240	--	--	--	743	NA	265 J	287 J	323 J	66.7 J	375 J	707	356 J
Chromium	mg/kg	8.93	30	3,000	27.2	2.8	NA	2.4 J	5.4 J	3.4 J	2.2 J	4.3 J	2.8 J	2.4 J
Cobalt	mg/kg	0.412	900	90,000	--	0.23 J	NA	0.19 J	0.21 J	0.2 J-	0.15 J-	0.32 J	0.22 J	0.19 J
Copper	mg/kg	11.2	3,100	310,000	704	5 U	NA	4.6 U	5.8 U	5 U	3.6 U	4.5 U	4.4 U	4.8 U
Iron	mg/kg	6,097	23,000	2,300,000	151	1,160	NA	943 J	1,070 J	958 J	858 J	1,580 J	985 J	954 J
Lead	mg/kg	25.8	400	40,000	270	20.7	NA	9.8	13.5	11.9	6.1	16	12	41
Magnesium	mg/kg	804	--	--	--	139 J	NA	123 J	136 J	134 J	89.3 J	233 J	192 J	162 J
Manganese	mg/kg	43.8	1,800	180,000	65.2	12.4	NA	11.5 J	9.4 J	13.3 J	12.2 J	8.1 J	27.4 J	9.7 J
Mercury	mg/kg	0.12	23	2,300	0.015	0.079 U	NA	0.034 U	0.078 U	0.067 U	0.035 U	0.11 J	0.082 U	0.068 U
Nickel	mg/kg	1.65	1,600	160,000	56.4	1 U	NA	0.59 J	0.82 J	0.75 J	0.49 J	1.1 J	0.85 J	0.61 J
Potassium	mg/kg	384	--	--	--	146 J	NA	135 J	143 J	145 J	81.8 J	254 J	172 J	232 J
Silver	mg/kg	0.372	390	39,000	0.217	0.034 U	NA	0.78 U	0.8 U	0.016 U	0.75 U	0.83 U	0.031 U	0.043 U
Sodium	mg/kg	--	--	--	--	26.8 U	NA	26.7 U	41.1 U	25 U	20 U	37.5 U	27.1 U	23.6 U
Vanadium	mg/kg	28.5	78	7,800	--	3.4 J	NA	3.2 J	3.7 J	3.5 J	3.2 J	6.5	4 J	3.5 J
Zinc	mg/kg	31.2	23,000	2,300,000	550	36.3	NA	21.7	17.1	15.1	5.2 U	18.4	15.5	13.7

Notes:
Shading Exceeds NCSSLs (North Carolina Soil Screening Levels)
Bold Frame Exceeds Basewide Background Concentrations
Bold and Italicized Exceeds Region 9 PRGs
Highlighting Exceeds Risk Based Concentrations (based on 10^{-4} Target Cancer Risk)
U- Analyte not detected
J- Reported value is estimated
J- - Reported value is biased low
UJ- Analyte not detected. Quantiation limit is imprecise
NA- Not analyzed
VOCs- Volatile Organic Compounds
SVOCs- Semi-Volatile Organic Compounds
PEST/PCBs- Pesticide/Polychlorinated Biphenyls

TABLE 5-4
Concentrations of VOCs, SVOCs, Pesticides, PCBs, and Metals in Surface Soil at Magnolia Road
Site 95 Site Investigation
MCB Camp Lejeune, North Carolina

Station ID	Units	Surface Soil BaseWide Background 2002	Region 9 PRGs - Residential Soil	10^{-4} Cancer Risk Concentration	NCSSL (May2005)	IR95B-IS123	IR95B-IS124	IR95B-IS125		IR95B-IS126	IR95B-IS127	IR95B-IS128	IR95B-IS129	IR95B-IS130
Sample ID						IR95B-IS123-0-1-06D-2	IR95B-IS124-0-1-06D-2	IR95B-IS125-0-1-06D-2	IR95B-IS125D-0-1-06D-2	IR95B-IS126-0-1-06D-2	IR95B-IS127-0-1-06D-2	IR95B-IS128-0-1-06D-2	IR95B-IS129-0-1-06D-2	IR95B-IS130-0-1-06D-2
Sample Date						10/05/06	10/05/06	10/05/06	10/05/06	10/05/06	10/05/06	10/05/06	10/05/06	10/05/06
Chemical Name														
VOCs (µg/kg)														
Acetone	µg/kg	--	14,000,000	1,400,000,000	2,810	NA	NA	NA	NA	NA	NA	NA	NA	NA
Trichlorofluoromethane(Freon-11)	µg/kg	--	390,000	39,000,000	31,500	NA	NA	NA	NA	NA	NA	NA	NA	NA
SVOCs (µg/kg)														
4-Methylphenol	µg/kg	--	310,000	31,000,000	17.4	390 U	410 U	390 U	390 U	370 U	410 U	390 U	390 U	390 U
Acenaphthylene	µg/kg	--	56,000	5,600,000	11,400	390 U	410 U	390 U	390 U	370 U	410 U	390 U	390 U	390 U
Anthracene	µg/kg	--	22,000,000	2,200,000,000	995,000	390 U	410 U	390 U	390 U	370 U	410 U	390 U	390 U	390 U
Benzaldehyde	µg/kg	--	6,100,000	610,000,000	--	390 UJ	410 UJ	390 UJ	390 UJ	43 J	410 U	39 J	390 U	63 J
Benzo(a)anthracene	µg/kg	--	620	62,000	343	390 U	410 U	390 U	390 U	370 U	410 U	390 U	390 U	390 U
Benzo(a)pyrene	µg/kg	--	62	6,200	92.8	390 U	410 U	40 J	43 J	370 U	410 U	390 U	390 U	390 U
Benzo(b)fluoranthene	µg/kg	--	620	62,000	1,180	390 U	410 U	81 J	77 J	370 U	410 U	390 U	390 U	390 U
Benzo(g,h,i)perylene	µg/kg	--	2,300,000	230,000,000	6,720,000	390 U	410 U	390 U	390 U	370 U	410 U	390 U	390 U	390 U
Benzo(k)fluoranthene	µg/kg	--	6,200	620,000	11,800	390 U	410 U	390 U	390 U	370 U	410 U	390 U	390 U	390 U
Chrysene	µg/kg	--	62,000	6,200,000	38,150	390 U	410 U	390 U	39 J	370 U	410 U	390 U	390 U	390 U
Di-n-butylphthalate	µg/kg	--	6,100,000	610,000,000	24,800	390 U	410 U	390 U	390 U	370 U	410 U	390 U	390 U	390 U
Fluoranthene	µg/kg	--	2,300,000	230,000,000	276,000	390 U	410 U	390 U	40 J	370 U	410 U	390 U	390 U	390 U
Indeno(1,2,3-cd)pyrene	µg/kg	--	620	62,000	3,320	390 U	410 U	390 U	390 U	370 U	410 U	390 U	390 U	390 U
Phenanthrene	µg/kg	--	2,300,000	230,000,000	59,600	390 U	410 U	390 U	390 U	370 U	410 U	390 U	390 U	390 U
Pyrene	µg/kg	--	2,300,000	230,000,000	286,000	390 U	410 U	390 U	43 J	370 U	410 U	390 U	390 U	390 U
bis(2-Ethylhexyl)phthalate	µg/kg	--	35,000	3,500,000	6,670	190 U	250 U	78 U	85 U	65 U	64 U	43 U	90 U	63 U
PEST/PBCs (µg/kg)														
4,4'-DDD	µg/kg	--	2,400	240,000	129	4 U	4.1 U	3.9 U	3.9 U	3.8 U	4.1 U	3.8 U	3.9 U	3.9 U
4,4'-DDE	µg/kg	--	1,700	170,000	--	4 U	4.1 U	3.9 U	3.9 U	3.8 U	4.1 U	3.8 U	3.9 U	3.9 U
4,4'-DDT	µg/kg	--	1,700	170,000	1,360	4 U	4.1 U	3.9 U	3.9 U	3.8 U	4.1 U	3.8 U	3.9 U	3.9 U
Aldrin	µg/kg	--	29	2,900	--	2 U	2.1 U	2 U	2 U	1.9 U	2.1 U	2 U	2 U	2 U
Endosulfan sulfate	µg/kg	--	370,000	37,000,000	--	4 U	4.1 U	3.9 U	3.9 U	3.8 U	4.1 U	3.8 U	3.9 U	3.9 U
Endrin	µg/kg	--	18,000	1,800,000	440	4 U	4.1 U	3.9 U	3.9 U	3.8 U	4.1 U	3.8 U	3.9 U	3.9 U
Endrin aldehyde	µg/kg	--	18,000	1,800,000	--	4 U	4.1 U	3.9 U	3.9 U	3.8 U	4.1 U	3.8 U	3.9 U	3.9 U
Endrin ketone	µg/kg	--	18,000	1,800,000	--	4 U	4.1 U	3.9 U	3.9 U	3.8 U	4.1 U	3.8 U	3.9 U	3.9 U
Heptachlor epoxide	µg/kg	--	53	5,300	6.34	2 U	2.1 U	2 U	2 U	1.9 U	2.1 U	2 U	2 U	2 U
alpha-Chlordane	µg/kg	--	1,600	160,000	--	2 U	2.1 U	2 U	2 U	1.9 U	2.1 U	2 U	2 U	2 U
gamma-Chlordane	µg/kg	--	1,600	160,000	--	2 U	2.1 U	2 U	2 U	1.9 U	2.1 U	2 U	2 U	2 U
Total Metals (mg/kg)														
Aluminum	mg/kg	8,965	76,000	7,600,000	--	2,700	3,110	3,350	3,300	2,450	2,340	3,750	2,330	3,480
Antimony	mg/kg	0.564	31	3,100	5.42	0.26 UJ	0.14 UJ	0.17 UJ	0.17 UJ	0.21 UJ	0.24 UJ	0.35 UJ	0.28 UJ	0.15 UJ
Arsenic	mg/kg	0.879	0.39	39	5.24	*5.1*	*4.5*	*6.8*	*6.8*	0.72 U	0.53 U	0.42 U	0.45 U	0.52 U
Barium	mg/kg	19.4	5,400	540,000	848	12 J	15.5 J	16.3 J	16.7 J	10.5 J	12.1 J	27.8	10 J	12.1 J
Beryllium	mg/kg	0.252	150	15,000	3.38	0.049 U	0.057 J	0.06 J	0.058 J	0.042 U	0.04 U	0.058 J	0.037 U	0.047 J
Calcium	mg/kg	33,240	--	--	--	355 J	764	274 J	301 J	125 J	285 J	1,560	314 J	112 J
Chromium	mg/kg	8.93	30	3,000	27.2	2.1	2.4	2.7	2.8	3.5	4	4.3	5.5	3.7
Cobalt	mg/kg	0.412	900	90,000	--	0.12 U	0.13 U	0.14 U	0.15 U	0.12 U	0.14 U	0.21 U	0.12 U	0.17 U
Copper	mg/kg	11.2	3,100	310,000	704	5.1	4.3 U	3.7 U	4 U	3.2 U	4.1	5	3.9 U	4.2
Iron	mg/kg	6,097	23,000	2,300,000	151	955	1,100	1,170	1,180	834	807	1,110	787	1,060
Lead	mg/kg	25.8	400	40,000	270	10.9 J	13 J	19.6 J	18.1 J	11.5 J	15.7 J	20.5 J	14.4 J	14.3 J
Magnesium	mg/kg	804	--	--	--	123 J	161 J	152 J	151 J	91 J	130 J	294 J	111 J	148 J
Manganese	mg/kg	43.8	1,800	180,000	65.2	5.8 J	24.4 J	11.1 J	11.9 J	5.1 J	8.2 J	82.6 J	5.6 J	5.9 J
Mercury	mg/kg	0.12	23	2,300	0.015	0.029 J	0.041 J	0.038 J	0.037 J	0.1	0.052 J	0.081 J	0.051 J	0.05 J
Nickel	mg/kg	1.65	1,600	160,000	56.4	0.67 J	0.76 J	0.76 J	0.79 J	0.55 J	0.62 J	1.2 J	0.67 J	0.85 J
Potassium	mg/kg	384	--	--	--	128 J	146 J	155 J	158 J	86.2 UJ	220 J	225 J	134 J	142 J
Silver	mg/kg	0.372	390	39,000	0.217	0.83 U	0.018 J	0.81 U	0.049 J	0.77 U	0.018 J	0.79 U	0.81 U	0.81 U
Sodium	mg/kg	--	--	--	--	21.2 U	29.1 U	27.7 U	31 U	26.2 U	24.9 U	32 U	22.1 U	24.5 U
Vanadium	mg/kg	28.5	78	7,800	--	3.3 J	3.8 J	4.2	4.2 J	3 J	3.3 J	4.2	3.1 J	4.2
Zinc	mg/kg	31.2	23,000	2,300,000	550	12.7	12.6	12.6	14.4	8.9 U	9.6 U	24	8 U	12.7

Notes:
Shading Exceeds NCSSLs (North Carolina Soil Screening Levels)
Bold Frame Exceeds Basewide Background Concentrations
Bold and Italicized Exceeds Region 9 PRGs
Highlighting Exceeds Risk Based Concentrations (based on 10^{-4} Target Cancer Risk)
U- Analyte not detected
J- Reported value is estimated
J- - Reported value is biased low
UJ- Analyte not detected. Quantiation limit is imprecise
NA- Not analyzed
VOCs- Volatile Organic Compounds
SVOCs- Semi-Volatile Organic Compounds
PEST/PCBs- Pesticide/Polychlorinated Biphenyls

TABLE 5-5
Concentrations of VOCs, SVOCs, Pesticides, PCBs, and Metals in Surface Soil at Magnolia Road
Site 95 Site Investigation
MCB Camp Lejeune, North Carolina

Station ID	Units	Subsurface Soil BaseWide Background 2002	Region 9 PRGs - Residential Soil	10^{-4} Cancer Risk Concentration	NCSSL (May2005)	IR95B-IS101	IR95B-IS103	IR95B-IS105	IR95B-IS107	IR95B-IS109		IR95B-IS111	IR95B-IS113	IR95B-IS114	IR95B-IS115	
Sample ID						IR95B-IS101-3-4-06D-2	IR95B-IS103-3-4-06D-2	IR95B-IS105-3-4-06D-2	IR95B-IS107-3-4-06D-2	IR95B-IS109-3-4-06D-2	IR95B-IS109D-3-4-06D-2	IR95B-IS111-3-4-06D-2	IR95B-IS113-3-4-06D-2	IR95B-IS114-3-4-06D-1	IR95B-IS115-3-4-06D-1	IR95B-IS115-3-4-06D-2
Sample Date						10/05/06	10/05/06	10/05/06	10/05/06	10/05/06	10/05/06	10/05/06	10/05/06	10/03/06	10/03/06	10/05/06
Chemical Name																
VOCs (µg/kg)																
2-Butanone	µg/kg	--	22,000,000	2,200,000,000	17,100	NA	NA	NA	NA	NA	NA	NA	NA	10 U	10 U	NA
Acetone	µg/kg	--	14,000,000	1,400,000,000	2,810	NA	NA	NA	NA	NA	NA	NA	NA	10 U	10 U	NA
Methylene chloride	µg/kg	--	9,100	910,000	20.2	NA	NA	NA	NA	NA	NA	NA	NA	10 U	10 U	NA
SVOCs (µg/kg)																
Caprolactam	µg/kg	--	31,000,000	3,100,000,000	--	390 U	380 U	380 U	380 U	400 U	400 U	380 U	380 U	NA	NA	380 U
Di-n-butylphthalate	µg/kg	--	6,100,000	610,000,000	24,800	390 U	380 U	380 U	380 U	400 U	400 U	62 J	58 J	NA	NA	72 J
bis(2-Ethylhexyl)phthalate	µg/kg	--	35,000	3,500,000	6,670	73 J	47 U	66 U	61 U	230 U	170 U	110 U	100 U	NA	NA	400 U
PEST/PCBs (µg/kg)																
4,4'-DDE	µg/kg	--	1,700	170,000	--	3.9 U	3.9 U	3.8 U	3.8 U	4 U	4 U	3.8 U	3.8 U	NA	NA	3.8 U
4,4'-DDT	µg/kg	--	1,700	170,000	1,360	3.9 U	3.9 U	3.8 U	3.8 U	4 U	4 U	3.8 U	3.8 U	NA	NA	3.8 U
Endrin aldehyde	µg/kg	--	18,000	1,800,000	--	3.9 U	3.9 U	3.8 U	3.8 U	4 U	4 U	3.8 U	3.8 U	NA	NA	3.8 U
Methoxychlor	µg/kg	--	310,000	31,000,000	56,100	20 U	20 U	20 U	20 U	21 U	21 U	19 U	19 U	NA	NA	20 U
Total Metals (mg/kg)																
Aluminum	mg/kg	13,061	76,000	7,600,000	--	12,900 J	13,200	10,200	12,200	10,400	9,840	10,200 J	10,400 J	NA	NA	10,500 J
Antimony	mg/kg	0.392	31	3,100	5.42	0.39 UJ	0.56 UJ	0.61 UJ	0.66 UJ	0.37 UJ	0.24 UJ	0.41 UJ	0.11 UJ	NA	NA	1.2 J
Arsenic	mg/kg	5.29	0.39	39	5.24	***3.6 J-***	***4.7***	***2***	***1.7***	***76.2***	***45.2***	***6.7***	1 U	NA	NA	***436***
Barium	mg/kg	37.34	5,400	540,000	848	13.1 J	16.3	11.9 J	13.7 J	16.4 J	19.9	11.5 J	12.6 J	NA	NA	16.9
Beryllium	mg/kg	0.432	150	15,000	3.38	0.13 J	0.16 J	0.13 J	0.14 J	0.097 J	0.097 J	0.13 J	0.095 J	NA	NA	0.1 J
Cadmium	mg/kg	--	37	3,700	0.95	0.41 UJ	0.42 U	0.42 U	0.42 U	0.44 U	0.43 U	0.32 J	0.029 U	NA	NA	0.063 U
Calcium	mg/kg	944	--	--	--	410 UJ	284 J	742	24.2 U	859	888	113 J	141 J	NA	NA	806
Chromium	mg/kg	30.9	30	3,000	27.2	18.5 J	20.9	15.1	18.1	14.6	12.3	17 J	11.6 J	NA	NA	11.8 J
Cobalt	mg/kg	2.33	900	90,000	--	0.45 J	0.58 J	0.45 J	0.55 J	0.37 J	0.33 J	1.1 J	0.6 J	NA	NA	0.69 J
Copper	mg/kg	7.03	3,100	310,000	704	4.1 U	4.4 U	3.9 U	4 U	7.5	4.4 U	4.8 U	4.4 U	NA	NA	4.3 U
Iron	mg/kg	16,984	23,000	2,300,000	151	6,570 J	6,690	3,890	4,950	5,750	3,610	7,190 J	2,310 J	NA	NA	3,110 J
Lead	mg/kg	12.6	400	40,000	270	7.8 J	7.9 J	6.4 J	7.2 J	7.7 J	7.6 J	6.5	6.7	NA	NA	13.2
Magnesium	mg/kg	1,022	--	--	--	584 J	565	562	550	457	427 J	399 J	412 J	NA	NA	486 J
Manganese	mg/kg	23.6	1,800	180,000	65.2	8.6 J	7.7 J	6.9 J	7.8 J	11.8 J	12.5 J	6.1 J	6.2 J	NA	NA	12.9 J
Mercury	mg/kg	0.096	23	2,300	0.015	0.098 U	0.11 U	0.093 U	0.1 U	0.017 J	0.028 J	0.032 U	0.03 U	NA	NA	0.09 U
Nickel	mg/kg	4.73	1,600	160,000	56.4	1.9 J	1.9 J	1.5 J	1.8 J	1.6 J	1.6 J	1.5 J	1.6 J	NA	NA	1.8 J
Potassium	mg/kg	1,043	--	--	--	747 J	621 J	563 J	643 J	409 J	393 J	459 J	358 J	NA	NA	460 J
Silver	mg/kg	0.18	390	39,000	0.217	0.82 U	0.84 U	0.03 J	0.83 U	0.89 U	0.051 J	0.17 U	0.033 U	NA	NA	0.016 U
Sodium	mg/kg	--	--	--	--	163 J	40.6 U	35.9 U	37.1 U	41.2 U	41.3 U	32.5 U	27.9 U	NA	NA	33.4 U
Vanadium	mg/kg	44.7	78	7,800	--	25.6 J	29.7	19.9	24.2	20.2	15.9	25.5	14	NA	NA	15.3
Zinc	mg/kg	21.5	23,000	2,300,000	550	6.9 U	7.5 U	5.6 U	6.6 U	18.4	21.9	6.1 U	5.7 U	NA	NA	11

Notes:
Shading Exceeds NCSSLs (North Carolina Soil Screening Levels)
Bold Frame Exceeds Basewide Background Concentrations
Bold and Italicized Exceeds Region 9 PRGs
Highlighting Exceeds 10^{-4} Cancer Risk Concentration
U- Analyte not detected
J- Reported value is estimated
J- - Reported value is biased low
UJ- Analyte not detected. Quantiation limit is imprecise
NA- Not analyzed
VOCs- Volatile Organic Compounds
SVOCs- Semi-Volatile Organic Compounds
PEST/PCBs- Pesticide/Polychlorinated Biphenyls

TABLE 5-5
Concentrations of VOCs, SVOCs, Pesticides, PCBs, and Metals in Surface Soil at Magnolia Road
Site 95 Site Investigation
MCB Camp Lejeune, North Carolina

Station ID	Units	Subsurface Soil BaseWide Background 2002	Region 9 PRGs - Residential Soil	10^{-4} Cancer Risk Concentration	NCSSL (May2005)	IR95B-IS116		IR95B-IS117		IR95B-IS119	IR95B-IS121	IR95B-IS123	IR95B-IS125	IR95B-IS127		IR95B-IS129
Sample ID						IR95B-IS116-3-4-06D-1	IR95B-IS116D-3-4-06D-1	IR95B-IS117-3-4-06D-2	IR95B-IS117D-3-4-06D-2	IR95B-IS119-3-4-06D-2	IR95B-IS121-3-4-06D-2	IR95B-IS123-3-4-06D-2	IR95B-IS125-3-4-06D-2	IR95B-IS127-3-4-06D-2	IR95B-IS127D-3-4-06D-2	IR95B-IS129-3-4-06D-2
Sample Date						10/03/06	10/03/06	10/05/06	10/05/06	10/05/06	10/05/06	10/05/06	10/05/06	10/05/06	10/05/06	10/05/06
Chemical Name																
VOCs (µg/kg)																
2-Butanone	µg/kg	--	22,000,000	2,200,000,000	17,100	11 U	46	NA	NA	NA	NA	NA	NA	NA	NA	NA
Acetone	µg/kg	--	14,000,000	1,400,000,000	2,810	11 U	7 J	NA	NA	NA	NA	NA	NA	NA	NA	NA
Methylene chloride	µg/kg	--	9,100	910,000	20.2	11 U	2 J	NA	NA	NA	NA	NA	NA	NA	NA	NA
SVOCs (µg/kg)																
Caprolactam	µg/kg	--	31,000,000	3,100,000,000	--	NA	NA	380 U	380 U	380 U	390 U	390 U	380 U	380 U	390 U	380 U
Di-n-butylphthalate	µg/kg	--	6,100,000	610,000,000	24,800	NA	NA	61 J	73 J	44 J	390 U	390 U	62 J	380 U	54 J	43 J
bis(2-Ethylhexyl)phthalate	µg/kg	--	35,000	3,500,000	6,670	NA	NA	300 U	170 U	130 U	120 U	110 U	200 U	120 U	420	110 U
PEST/PCBs (µg/kg)																
4,4'-DDE	µg/kg	--	1,700	170,000	--	NA	NA	3.8 U	3.8 U	3.8 U	3.9 U	3.9 U	3.8 U	3.8 U	3.9 U	3.8 U
4,4'-DDT	µg/kg	--	1,700	170,000	1,360	NA	NA	3.8 U	3.8 U	3.8 U	3.9 U	3.9 U	3.8 U	3.8 U	3.9 U	3.8 U
Endrin aldehyde	µg/kg	--	18,000	1,800,000	--	NA	NA	3.8 U	3.8 U	3.8 U	3.9 U	3.9 U	3.8 U	3.8 U	3.9 U	3.8 U
Methoxychlor	µg/kg	--	310,000	31,000,000	56,100	NA	NA	19 U	19 U	20 U	20 U	20 U	19 U	20 U	20 U	19 U
Total Metals (mg/kg)																
Aluminum	mg/kg	13,061	76,000	7,600,000	--	NA	NA	7,860 J	8,400 J	8,120 J	11,400 J	11,000 J	11,700 J	12,000 J	11,100	7,510 J
Antimony	mg/kg	0.392	31	3,100	5.42	NA	NA	0.14 UJ	0.13 UJ	0.29 UJ	0.29 UJ	0.25 UJ	0.31 UJ	0.19 UJ	0.46 UJ	0.18 UJ
Arsenic	mg/kg	5.29	0.39	39	5.24	NA	NA	1.3 U	1.2 U	*6.1*	*5.8*	***2.6***	***2***	***3.1***	***3.6***	***1.7***
Barium	mg/kg	37.34	5,400	540,000	848	NA	NA	9.4 J	9.9 J	9.8 J	13.9 J	14.5 J	16.2	13.5 J	12.5 J	8.3 J
Beryllium	mg/kg	0.432	150	15,000	3.38	NA	NA	0.099 J	0.073 J	0.1 J	0.14 J	0.12 J	0.12 J	0.14 J	0.056 J	0.082 J
Cadmium	mg/kg	--	37	3,700	0.95	NA	NA	0.4 U	0.39 U	0.39 U	0.41 U	0.39 U	0.39 U	0.4 U	0.31 J	0.41 U
Calcium	mg/kg	944	--	--	--	NA	NA	514	433	80.4 J	80.1 J	118 J	118 J	158 J	248 J	107 J
Chromium	mg/kg	30.9	30	3,000	27.2	NA	NA	5.8 J	5.9 J	13.5 J	20.4 J	15.2 J	14.7 J	18.5 J	19.4	10.2 J
Cobalt	mg/kg	2.33	900	90,000	--	NA	NA	0.37 J	0.39 J	0.94 J-	1.4 J-	0.88 J-	0.91 J-	0.97 J-	1.1 J	0.51 J-
Copper	mg/kg	7.03	3,100	310,000	704	NA	NA	3.9 U	4.3 U	4.7 U	4.9 U	4.5 U	5.1 U	5.2 U	6 U	4.3 U
Iron	mg/kg	16,984	23,000	2,300,000	151	NA	NA	1,670 J	1,760 J	7,160 J	11,200 J	5,320 J	5,240 J	5,910 J	6,900	2,780 J
Lead	mg/kg	12.6	400	40,000	270	NA	NA	4.9	4.7	5.2	7.5	6.7	7.1	7.1	6.7	6
Magnesium	mg/kg	1,022	--	--	--	NA	NA	259 J	284 J	319 J	444 J	444 J	473 J	494 J	444	323 J
Manganese	mg/kg	23.6	1,800	180,000	65.2	NA	NA	5.7 J	5.9 J	5.1 J	5.8 J	6.7 J	7.4 J	7.1 J	6.1	5 J
Mercury	mg/kg	0.096	23	2,300	0.015	NA	NA	0.048 U	0.035 U	0.027 U	0.037 U	0.032 U	0.032 U	0.026 U	0.027 U	0.027 U
Nickel	mg/kg	4.73	1,600	160,000	56.4	NA	NA	1.4 J	1.5 J	1.2 J	1.5 J	1.5 J	1.8 J	1.7 J	2.2 J	1.2 J
Potassium	mg/kg	1,043	--	--	--	NA	NA	193 J	202 J	430 J	515 J	461 J	449 J	553 J	461 J	367 J
Silver	mg/kg	0.18	390	39,000	0.217	NA	NA	0.8 U	0.77 U	0.13 U	0.072 U	0.039 U	0.019 U	0.79 U	0.2 U	0.023 U
Sodium	mg/kg	--	--	--	--	NA	NA	38.6 U	41.2 U	36.4 U	35.1 U	37.5 U	43.2 U	63.6 U	42.8 U	32.3 U
Vanadium	mg/kg	44.7	78	7,800	--	NA	NA	6.8	7.6	20.5	27.8	20.6	20	23.1	22.9 J	12.9
Zinc	mg/kg	21.5	23,000	2,300,000	550	NA	NA	4.4 U	4.5 U	5.4 U	6.9 U	7 U	6.8 U	7.7 U	9.7 U	6.5 U

Notes:
Shading Exceeds NCSSLs (North Carolina Soil Screening Levels)
Bold Frame Exceeds Basewide Background Concentrations
Bold and Italicized Exceeds Region 9 PRGs
Highlighting Exceeds 10^{-4} Cancer Risk Concentration
U- Analyte not detected
J- Reported value is estimated
J- - Reported value is biased low
UJ- Analyte not detected. Quantiation limit is imprecise
NA- Not analyzed
VOCs- Volatile Organic Compounds
SVOCs- Semi-Volatile Organic Compounds
PEST/PCBs- Pesticide/Polychlorinated Biphenyls

TABLE 5-6a
Human Health Risk Screenining Step 1 - Magnolia Road
Site 95 Site Investigation
MCB Camp Lejeune, North Carolina

Station ID Sample ID Sample Date	NC2LGW (May 2005)	Background	Detection Frequency	Max Detect	SampleID of Maximum Detected Value	Minimum Detect Value	SampleID of Minimum Value	COPC
Pesticide/Polychlorinated Biphenyls (UG/L)								
delta-BHC	0.019	--	1 - 3	0.0068	IR95B-GW01-06C	0.0068	IR95B-GW02-06C	NO
Total Metals (UG/L)								
Aluminum	--	3102.6	3 - 3	365	IR95B-GW03-06C	290	IR95B-GW01-06C	NO
Antimony	--	2.42	2 - 3	1.5	IR95B-GW02-06C	1.4	IR95B-GW01-06C	NO
Cadmium	1.75	0.23	1 - 3	0.12	IR95B-GW01-06C	0.12	IR95B-GW01-06C	NO
Iron	300	16245.5	3 - 3	1,020	IR95B-GW01-06C	35.6	IR95B-GW02-06C	NO
Manganese	50	291.2	1 - 3	17.1	IR95B-GW03-06C	17.1	IR95B-GW01-06C	NO
Potassium	--	3,422.7	3 - 3	1,290	IR95B-GW01-06C	929	IR95B-GW02-06C	NO
Silver	17.5	0.74	1 - 3	0.92	IR95B-GW01-06C	0.92	IR95B-GW01-06C	NO
Sodium	--	24,602.9	3 - 3	9,460	IR95B-GW01-06C	8,510	IR95B-GW03-06C	NO
Wet Chemistry (MG/L)								
Chloride	250	--	3 - 3	17	IR95B-GW02-06C	13	IR95B-GW01-06C	NO
Sulfate	250	--	3 - 3	14	IR95B-GW01-06C	14	IR95B-GW01-06C	NO
Total organic carbon (TOC)	--	--	1 - 3	11	IR95B-GW01-06C	11	IR95B-GW02-06C	NO

TABLE 5-6b
Human Health Risk Screening Step 1 - Magnolia Road Surface Soil
Site 95 Site Investigation
MCB Camp Lejeune, North Carolina

Station ID / Sample ID / Sample Date / Chemical Name	NCSSL (May 2005)	Region 9 PRGs - Residential Soil	10^{-4} Cancer Risk Concentration	Background	Detection Frequency	Max Detect	SampleID of Maximum Detected Value	Minimum Detect Value	SampleID of Minimum Value	COPC
Semi-volatile Organic Compounds (UG/KG)										
Benzaldehyde	--	6,100,000	610,000,000	--	7 - 31	110	IR95B-IS120-0-1-06D-2	37	IR95B-IS116-0-1-06D-2	NO
Benzo(a)pyrene	92.8	62	6,200	--	1 - 31	43	IR95B-IS125-0-1-06D-2	43	IR95B-IS125-0-1-06D-2	NO
Benzo(b)fluoranthene	1,180	620	62,000	--	1 - 31	81	IR95B-IS125-0-1-06D-2	81	IR95B-IS125-0-1-06D-2	NO
Chrysene	38,150	62,000	6,200,000	--	1 - 31	39	IR95B-IS125-0-1-06D-2	39	IR95B-IS125-0-1-06D-2	NO
Di-n-butylphthalate	24,800	6,100,000	610,000,000	--	9 - 31	82	IR95B-IS117-0-1-06D-2	38	IR95B-IS119-0-1-06D-2	NO
Fluoranthene	276,000	2,300,000	230,000,000	--	1 - 31	40	IR95B-IS125-0-1-06D-2	40	IR95B-IS125-0-1-06D-2	NO
Pyrene	286,000	2,300,000	230,000,000	--	1 - 31	43	IR95B-IS125-0-1-06D-2	43	IR95B-IS125-0-1-06D-2	NO
bis(2-Ethylhexyl)phthalate	6,670	35,000	3,500,000	--	9 - 31	490	IR95B-IS105-0-1-06D-2	52	IR95B-IS100-0-1-06D-2	NO
Pesticide/Polychlorinated Biphenyls (UG/KG)										
Aldrin	--	29	2900	--	1 - 31	2.8	IR95B-IS122-0-1-06D-2	2.8	IR95B-IS105-0-1-06D-2	NO
Endrin	440	18,000	1800000	--	4 - 31	16	IR95B-IS122-0-1-06D-2	2.4	IR95B-IS119-0-1-06D-2	NO
Total Metals (MG/KG)										
Aluminum	--	76,000	7,600,000	8,965	31 - 31	13,000	IR95B-IS101-0-1-06D-2	2,330	IR95B-IS129-0-1-06D-2	NO
Antimony	5.42	31	3,100	0.564	1 - 31	2.2	IR95B-IS114-0-1-06D-2	2.2	IR95B-IS114-0-1-06D-2	NO
Arsenic	5.24	0.39	39	0.879	17 - 31	188	IR95B-IS115-0-1-06D-2	0.92	IR95B-IS126-0-1-06D-2	YES
Barium	848	5,400	540,000	19.4	31 - 31	31.7	IR95B-IS115-0-1-06D-2	7.7	IR95B-IS111-0-1-06D-2	NO
Beryllium	3.38	150	15,000	0.252	24 - 31	0.14	IR95B-IS101-0-1-06D-2	0.039	IR95B-IS121-0-1-06D-2	NO
Calcium	--	--	--	33,240	31 - 31	2,160	IR95B-IS106-0-1-06D-2	66.7	IR95B-IS119-0-1-06D-2	NO
Chromium	27.2	30	3,000	8.93	29 - 31	17.8	IR95B-IS101-0-1-06D-2	2.1	IR95B-IS106-0-1-06D-2	NO
Cobalt	--	900	90,000	0.412	11 - 31	0.55	IR95B-IS114-0-1-06D-2	0.15	IR95B-IS119-0-1-06D-2	NO
Copper	704	3,100	310,000	11.2	8 - 31	97.3	IR95B-IS103-0-1-06D-2	4.1	IR95B-IS116-0-1-06D-2	NO
Iron	151	23,000	2,300,000	6,097	31 - 31	6,690	IR95B-IS101-0-1-06D-2	569	IR95B-IS111-0-1-06D-2	NO
Lead	270	400	40,000	25.8	31 - 31	41	IR95B-IS122-0-1-06D-2	3.6	IR95B-IS111-0-1-06D-2	NO
Magnesium	--	--	--	804	31 - 31	656	IR95B-IS101-0-1-06D-2	89.3	IR95B-IS119-0-1-06D-2	NO
Manganese	65.2	1,800	180,000	43.8	31 - 31	82.6	IR95B-IS128-0-1-06D-2	5.1	IR95B-IS126-0-1-06D-2	NO
Mercury	0.015	23	2,300	0.120	19 - 31	0.11	IR95B-IS115-0-1-06D-2	0.018	IR95B-IS111-0-1-06D-2	NO
Nickel	56.4	1,600	160,000	1.65	31 - 31	2.1	IR95B-IS101-0-1-06D-2	0.49	IR95B-IS119-0-1-06D-2	NO
Potassium	--	--	--	384	30 - 31	658	IR95B-IS101-0-1-06D-2	81.8	IR95B-IS119-0-1-06D-2	NO
Silver	0.217	390	39,000	0.372	3 - 31	0.049	IR95B-IS125-0-1-06D-2	0.018	IR95B-IS124-0-1-06D-2	NO
Vanadium	--	78	7,800	28.5	31 - 31	24.3	IR95B-IS101-0-1-06D-2	2.8	IR95B-IS111-0-1-06D-2	NO
Zinc	550	23,000	2,300,000	31.2	22 - 31	957	IR95B-IS103-0-1-06D-2	9.3	IR95B-IS119-0-1-06D-2	NO

TABLE 5-6c
Human Health Risk Screening Step 1 - Magnolia Road Subsurface Soil
Site 95 Site Investigation
MCB Camp Lejeune, North Carolina

Station ID Sample ID Sample Date Chemical Name	NCSSL (May 2005)	Region 9 PRGs - Residential Soil	10^{-4} Cancer Risk Concentration	Background	Detection Frequency	Max Detect	SampleID of Maximum Detected Value	Minimum Detect Value	SampleID of Minimum Value	COPC
Volatile Organic Compounds (UG/KG)										
2-Butanone	17,100	22,000,000	2,200,000,000	--	1 - 3	46	IR95B-IS116-3-4-06D-1	46	IR95B-IS114-3-4-06D-1	NO
Acetone	2,810	14,000,000	1,400,000,000	--	1 - 3	7	IR95B-IS116-3-4-06D-1	7	IR95B-IS114-3-4-06D-1	NO
Methylene chloride	20.2	9,100	910,000	--	1 - 3	2	IR95B-IS116-3-4-06D-1	2	IR95B-IS116-3-4-06D-1	NO
Semi-volatile Organic Compounds (UG/KG)										
Di-n-butylphthalate	24,800	6,100,000	610,000,000	--	8 - 15	73	IR95B-IS117-3-4-06D-2	43	IR95B-IS129-3-4-06D-2	NO
bis(2-Ethylhexyl)phthalate	6,670	35,000	3,500,000	--	2 - 15	420	IR95B-IS127-3-4-06D-2	73	IR95B-IS101-3-4-06D-2	NO
Total Metals (MG/KG)										
Aluminum	--	76,000	7,600,000	13,061	15 - 15	13,200	IR95B-IS103-3-4-06D-2	7,510	IR95B-IS129-3-4-06D-2	NO
Antimony	5.42	31	3,100	0.392	1 - 15	1.2	IR95B-IS115-3-4-06D-2	1.2	IR95B-IS115-3-4-06D-2	NO
Arsenic	5.24	0.39	39	5.29	13 - 15	436	IR95B-IS115-3-4-06D-2	1.7	IR95B-IS113-3-4-06D-2	YES
Barium	848	5,400	540,000	37.34	15 - 15	19.9	IR95B-IS109-3-4-06D-2	8.3	IR95B-IS129-3-4-06D-2	NO
Beryllium	3.38	150	15,000	0.432	15 - 15	0.16	IR95B-IS103-3-4-06D-2	0.082	IR95B-IS129-3-4-06D-2	NO
Cadmium	0.95	37	3,700	--	2 - 15	0.32	IR95B-IS111-3-4-06D-2	0.31	IR95B-IS113-3-4-06D-2	NO
Calcium	--	--	--	944	13 - 15	888	IR95B-IS109-3-4-06D-2	80.1	IR95B-IS121-3-4-06D-2	NO
Chromium	27.2	30	3,000	30.9	15 - 15	20.9	IR95B-IS103-3-4-06D-2	5.9	IR95B-IS117-3-4-06D-2	NO
Cobalt	--	900	90,000	2.33	15 - 15	1.4	IR95B-IS121-3-4-06D-2	0.37	IR95B-IS109-3-4-06D-2	NO
Copper	704	3,100	310,000	7.03	1 - 15	7.5	IR95B-IS109-3-4-06D-2	7.5	IR95B-IS111-3-4-06D-2	NO
Iron	151	23,000	2,300,000	16,984	15 - 15	11,200	IR95B-IS121-3-4-06D-2	1,760	IR95B-IS117-3-4-06D-2	NO
Lead	270	400	40,000	12.6	15 - 15	13.2	IR95B-IS115-3-4-06D-2	4.9	IR95B-IS117-3-4-06D-2	NO
Magnesium	--	--	--	1,022	15 - 15	584	IR95B-IS101-3-4-06D-2	284	IR95B-IS117-3-4-06D-2	NO
Manganese	65.2	1,800	180,000	23.6	15 - 15	12.9	IR95B-IS115-3-4-06D-2	5	IR95B-IS129-3-4-06D-2	NO
Mercury	0.015	23	2,300	0.096	1 - 15	0.028	IR95B-IS109-3-4-06D-2	0.028	IR95B-IS109-3-4-06D-2	NO
Nickel	56.4	1,600	160,000	4.73	15 - 15	2.2	IR95B-IS127-3-4-06D-2	1.2	IR95B-IS119-3-4-06D-2	NO
Potassium	--	--	--	1,043	15 - 15	747	IR95B-IS101-3-4-06D-2	202	IR95B-IS117-3-4-06D-2	NO
Silver	0.217	390	39,000	0.180	2 - 15	0.051	IR95B-IS109-3-4-06D-2	0.03	IR95B-IS105-3-4-06D-2	NO
Sodium	--	--	--	--	1 - 15	163	IR95B-IS101-3-4-06D-2	163	IR95B-IS101-3-4-06D-2	NO
Vanadium	--	78	7,800	44.7	15 - 15	29.7	IR95B-IS103-3-4-06D-2	7.6	IR95B-IS117-3-4-06D-2	NO
Zinc	550	23,000	2,300,000	21.5	2 - 15	21.9	IR95B-IS109-3-4-06D-2	11	IR95B-IS111-3-4-06D-2	NO

SECTION 6

Site 95 – Lyman Road

6.1 Site Background

Site 95-Lyman Road is located on the northwest side of an unpaved road that branches to the north of Lyman Road approximately 2,600 feet west of State Route 172 in a previously heavily wooded area that was cleared for sampling purposes **(Figure 1-2).** The dipping vat at this location is made of concrete and is roughly 25 feet long, 7 feet deep and 3 to 4 feet wide.

6.2 Previous Investigations

The Site 95-Lyman Road dipping vat was located following Baker's dipping vat investigation (Baker, 2004); therefore, there has been no initial assessment of this site. Based on the results of the initial assessment of Site 95-Jaybird Road and Site 95-Magnolia Road, assessment of Site 95-Lyman Road was proposed, as it was used for similar purposes.

6.3 Site Investigation Activities

The investigation at Site 95-Lyman Road consisted of DPT, soil sampling, monitoring well installation, and groundwater sampling. Each activity is described in detail in the subsequent sections.

6.3.1 Monitoring Well Installation and Development

Three monitoring wells were installed at Site 95-Lyman Road at the locations shown on **Figure 2-3.** The monitoring well locations were selected to represent the entrance to the dipping vat (IR95C-MW01), the exit of the dipping vat (IR95C-MW02), and a downgradient (assumed) location (IR95C-MW03).

In February 2006, Probe Technology, Inc. drilled the shallow monitoring wells using four and one-quarter inch ID HSAs. Soils were logged by CH2M HILL's onsite geologist according to USCS. Soil descriptions included grain size, USCS symbol and classification, moisture content, relative density or consistency, and any other relevant information such as evidence of contamination.

The wells were constructed, as directed by CH2M HILL's onsite geologist, using two-inch ID, Schedule 40, PVC well casing and screen materials. Ten feet of 0.010-inch slot well screen was used for each well. Well screens were installed to bisect the water table. The annular space around the well screen was backfilled with well-graded fine sand to approximately two feet above the top of the screened interval. An approximately two-foot thick bentonite seal was installed above the sand pack. The annular space above the bentonite seal was backfilled with cement and bentonite grout to prevent surface and near

subsurface water from infiltrating into the screened groundwater-monitoring zone. Stick-up well covers, each with four protective bollards, were installed at each well and surrounded by a concrete pad.

Appendix D provides the soil boring logs and monitoring well construction diagrams for the wells installed at Site 95-Lyman Road.

Monitoring wells were developed using pumping and surging methods. Conductivity, pH, temperature, DO, ORP, and turbidity were monitored during development. Field measurements from well development are included in **Table 6-1**.

6.3.2 Geotechnical Analysis

One UD soil sample was collected from Site 95-Lyman Road for geotechnical analysis. The UD soil sample was collected from IR95C-MW01 at a depth of 7 feet bgs to 8.75 feet bgs. The sample was sealed and transported to Geotechnics Geotechnical and Geosynthetic Laboratories in Raleigh, North Carolina for analysis of geotechnical parameters including permeability, porosity, and grain size distribution.

6.3.3 Groundwater Sampling

Once the new monitoring wells were installed and developed, a round of groundwater samples were collected as part of the SI field activities.

Depth-to-groundwater measurements were collected from the Site 95-Lyman Road monitoring wells (**Table 3-2**). Measurements were collected from each well with a water-level probe prior to purging and sampling and converted to water-level elevations using the top-of-casing elevation survey data. These data were also used to determine groundwater flow direction.

Groundwater samples were collected from the three newly installed monitoring wells using a peristaltic pump and low flow sampling techniques from March 9 through March 10, 2006. Well water was purged at a rate of 0.1 gpm. During purging, water quality parameters were measured using a Horiba U-22® water quality indicator. These parameters included conductivity, turbidity, DO, pH, temperature, and ORP. Field measurements from sampling are included on **Table 6-2**. At least one well volume was purged from each well prior to sampling. Groundwater samples were collected directly from disposable tubing into pre-preserved laboratory prepared sample bottles. Once collected in appropriately labeled containers, groundwater samples were immediately packed on ice in coolers and shipped via Federal Express delivery to Mitkem Corporation for analysis. Groundwater samples remained in the presence of a CH2M HILL project representative until delivery to the Federal Express location. A chain-of-custody record was used to maintain a record of personnel who had control of the samples. The groundwater samples were analyzed for VOCs, SVOCs, PCBs, NAIPs, TAL metals, and pesticides in accordance with **Table 3-1**.

Groundwater chain-of-custody forms for the groundwater assessment are included in **Appendix E.**

6.3.4 Direct Push Technology Boring (Soil Sampling)

The Site 95-Lyman Road soil investigation consisted of gridded soil sampling using DPT. In October 2006, a total of 28 borings were advanced at the vat location and placed on approximately 20 foot centers near the vat, with slightly wider spacing in the surrounding areas, as shown on **Figure 6-1**. Continuous core soil samples were collected for visual description and VOC screening in disposable acetate sleeves using a macro-core soil sampler.

Surface soil samples were collected at each boring location from a depth interval of zero to one foot bgs for laboratory analysis. Sixteen subsurface soil samples were collected above the water table from a depth interval of three to four feet bgs for laboratory analysis. Once collected in appropriately labeled containers, soil samples were immediately packed on ice in coolers and shipped via Federal Express delivery to Mitkem Corporation for analysis. Soil samples remained in the presence of a CH2M HILL project representative until delivery to the Federal Express location. A chain-of-custody record was used to maintain a record of personnel who had control of the samples.

Soil samples were analyzed for VOCs, SVOCs, PCBs, TAL metals, and pesticides in accordance with **Table 3-1**.

Chain-of-custody forms for the soil assessment are included in **Appendix F**.

6.4 Site 95-Lyman Road Soil and Hydrogeology

6.4.1 Lithologic Description

The geology of the investigation area at Site 95-Lyman Road is consistent with the facility and regional geology. Three borings at Site 95-Lyman were advanced to 20 feet bgs (IR95C-MW01 and IR95C-MW02) and 17 feet bgs (IR95C-MW03), 12 surface borings were advanced to one foot bgs, and 16 borings were advanced to four feet bgs. Boring locations are shown on **Figure 6-1** and lithologic descriptions are provided in **Appendix D**. The surface soil to one foot bgs is mostly composed of light gray and brown very fine to fine sand and organics. The underlying soil is composed of orange to tan to gray very fine to fine sands, which have varying amounts of silts and clays. Clay content increases with depth and a light gray clayey fine sand is encountered around 14 feet bgs.

6.4.2 Groundwater Characteristics

Groundwater elevations at the site ranged from 20.9 to 21.1 feet msl during the water level survey conducted at Site 95-Lyman Road **(Table 3-2).** Data collected for this SI indicate that the direction of groundwater flow is northeasterly towards an unnamed tributary to Bear Creek, which discharges to Onslow Bay (**Figure 6-2**), with an average gradient of 0.005 feet/feet.

6.5 Analytical Results

Analytical results of the SI for Site 95-Lyman Road are provided in **Appendix B**. Constituents detected at concentrations exceeding Base background concentrations and/or

screening criteria in groundwater, surface soil, and subsurface soil are summarized in **Tables 6-3** through **6-5**, respectively. Surface soil analytical results in exceedance of screening criteria are shown also shown on **Figure 6-3**.

6.5.1 Groundwater

Volatile Organic Compounds. One VOC (chloroform) was detected above MDLs in the groundwater samples collected from all three monitoring wells at Site 95-Lyman Road. However, VOCs were not detected at concentrations exceeding NCGWQS.

Semi-Volatile Organic Compounds. SVOCs were not detected at concentrations exceeding MDLs in groundwater samples collected from monitoring wells at Site 95-Lyman Road.

Pesticides/PCBs. Pesticides and PCBs were not detected at concentrations exceeding MDLs in groundwater samples collected from Site 95-Lyman Road monitoring wells.

Metals. Six metals were detected at concentrations exceeding MDLs in groundwater samples collected from Site 95-Lyman Road monitoring wells, including aluminum, arsenic, copper, iron, potassium, and sodium. Metals were not detected at concentrations in exceedance of NCGWQS.

6.5.2 Surface Soil

Volatile Organic Compounds. One VOC (acetone) was detected at concentrations exceeding MDLs in surface soil samples collected from Site 95-Lyman Road; however, VOCs were not detected at concentrations exceeding screening criteria.

Semi-Volatile Organic Compounds. Thirteen SVOCs were detected at concentrations exceeding MDLs, but less than screening criteria, in surface soil samples collected from Site 95-Lyman Road, including acenaphthylene, anthracene, benzaldehyde, benzo(a)anthracene, benzo(g,h,i)perylene, benzo(k)fluoranthene, di-n-butylphthalate, chrysene, fluoranthene, indeno(1,2,3-cd)pyrene, phenanthrene, pyrene, and bis(2-ethylhexyl)phthalate. The benzo(a)pyrene Residential PRG and SSL are exceeded in the surface soil sample collected from IR95C-IS123, at a concentration of 530 micrograms per kilogram (µg/kg). The detected concentration of benzo(a)pyrene does not exceed the acceptable 10^{-4} cancer risk. The benzo(b)fluoranthene SSL is exceeded in the surface soil sample collected from IR95C-IS123, at a concentration of 680 µg/kg.

Pesticides/PCBs. Ten pesticides were detected at concentrations exceeding MDLs in surface soil samples collected from Site 95-Lyman Road, including 4,4'-DDD, 4,4'-DDE, 4,4'-DDT, aldrin, endrin aldehyde, endosulfan sulfate, endrin ketone, heptachlor epoxide, alpha-chlordane, and gamma-chlordane; however, pesticides were not detected at concentrations exceeding screening criteria. PCBs were not detected at concentrations exceeding MDLs in any surface soil samples collected from Site 95-Lyman Road.

Metals. Fourteen metals were detected at concentrations exceeding MDLs, but less than screening criteria, in the surface soil samples collected from Site 95-Lyman Road, including aluminum, barium, beryllium, calcium, chromium, cobalt, copper, lead, magnesium, nickel, potassium, sodium, vanadium, and zinc. Arsenic concentrations detected in surface soil samples collected from Site 95-Lyman Road exceed the Residential PRG in five locations and the SSL in two locations, at a maximum concentration of 15.4 mg/kg in the surface soil

sample collected from IR95C-IS102. The Base background concentration was exceeded in five of these locations, as shown on **Figure 6-3**. Arsenic was not detected at concentrations above the 10^{-4} cancer risk in any surface soil sample collected at Site 95-Lyman Road. Iron concentrations detected in surface soil samples at Site 95-Lyman Road exceed the SSL in 28 locations, but exceed the Base background concentration in the surface soil sample collected from only one of these locations, IR95C-IS121, at a concentration of 6,750 mg/kg. Mercury concentrations detected in surface soil samples exceed the SSL in 12 locations, but exceed the Base background concentration in the surface soil sample collected from only one of these locations, IR95C-IS126, at a concentration of 0.16 mg/kg. Detected manganese concentrations exceed the SSL and Base background concentrations in surface soil samples collected from two locations, IR95C-IS117 and IR95C-IS122.

6.5.3 Subsurface Soil

Volatile Organic Compounds. VOCs were not detected at concentrations exceeding MDLs in subsurface soil samples collected from Site 95-Lyman Road.

Semi-Volatile Organic Compounds. Two SVOCs, di-n-butylphthalate and bis(2-ethylhexyl)phthalate, were detected at concentrations exceeding MDLs in subsurface soil samples collected from Site 95-Lyman Road; however, SVOCs were not detected at concentrations exceeding screening criteria.

Pesticides/PCBs. Three pesticides (4,4'-DDT, endrin aldehyde, and methoxychlor) were detected at concentrations exceeding MDLs in subsurface soil samples collected from Site 95-Lyman Road; however, pesticides were not detected at concentrations exceeding screening criteria. PCBs were not detected at concentrations above MDLs in subsurface soil samples collected from Site 95-Lyman Road during SI activities.

Metals. Twelve metals were detected at concentrations exceeding MDLs, but less than screening criteria, in subsurface soil samples collected from Site 95-Lyman Road, including aluminum, barium, beryllium, calcium, chromium, cobalt, lead, magnesium, manganese, nickel, potassium, and vanadium. Arsenic concentrations exceed the Residential PRG in subsurface soil samples collected from six locations, detected iron concentrations exceed the SSL in subsurface soil samples collected from 14 locations, and mercury exceeds the SSL in subsurface soil samples collected one location; however, metals were not detected at concentrations exceeding Base background concentrations in subsurface soil samples collected from Site 95-Lyman Road.

6.5.4 Geotechnical Test Results

The undisturbed sample collected from the IR95C-MW01 boring yielded the following results:

- The average permeability is 5.2E-05 cm/sec at 20 degrees Celsius
- The average specific gravity is 2.60 at 20 degrees Celsius
- The grain size ranges from 0.075 to 2.0 mm
- The USCS classification is SP.

Results of the geotechnical analysis are included in **Appendix G**.

6.6 Human Health Risk Screening (HHRS)

As shown on **Table 6-6a**, the maximum detected concentrations of all analytes in groundwater were below NCGWQS. No COPCs are identified for Site 95-Lyman Road groundwater.

As shown on **Table 6-6b**, the maximum detected concentration of the SVOC benzo(a)pyrene exceeded the Residential PRG and SSL; however, the maximum detected benzo(a)pyrene concentration did not exceed the acceptable 10^{-4} cancer risk. Therefore, benzo(a)pyrene is not retained as a COPC. The maximum detected concentration of benzo(b)fluoranthene exceeded the SSL. As previously described, SSLs are screening levels to protect groundwater; however, benzo(b)fluoranthene is not detected at concentrations exceeding MDLs in any groundwater samples collected at Site 95-Lyman Road. Therefore, benzo(b)fluoranthene is not retained as a COPC for surface soil. The maximum detected concentration of arsenic is within the acceptable range of cancer risk; therefore, arsenic is not retained as a COPC for Site 95-Lyman Road surface soil. The metals iron and mercury were detected at concentrations exceeding screening criteria; however, these metals are likely naturally occurring, based on known historical site activities. Iron and mercury will not be considered further.

As shown on **Table 6-6c**, the maximum detected concentrations of all organics, pesticides, and PCBs in subsurface soil were below Residential PRGs and SSLs. The maximum detected concentrations of the metals arsenic, iron, and mercury were in exceedance of the Residential PRGs and/or SSLs; however, no metals were detected at concentrations greater than Base background concentrations. This indicates that metal concentrations are consistent with Base background conditions, rather than site releases. No COPCs are identified for Site 95-Lyman Road subsurface soil.

6.7 Conclusions

Based on the results of the SI, no unacceptable risks to humans exposed to constituents in groundwater, surface soil, or subsurface soil at Site 95-Lyman Road were identified.

Tables

Table 6-1
Water Quality Parameters Collected During Monitoring Well Development at Lyman Road Site 95 Site Investigation
MCB Camp Lejeune, North Carolina

Station ID	IR95C-MW01	IR95C-MW02	IR95C-MW03
Sample Date	2/23/2006	2/24/2006	2/23/2006
Field Parameters			
Dissolved Oxygen (mg/l)	9.85	4.76	7.44
Oxidation Reduction Potential (mV)	285	322	326
pH	4.69	4.80	4.58
Specific Conductivity (ms/cm)	0.043	0.047	0.048
Temperature (C)	16.67	15.47	15.65
Turbidity (NTU)	46.7	68.4	94.4
Volume (gal)	65	130	85

Table 6-2
Water Quality Parameters Collected During Groundwater Sampling at Lyman Road Site 95 Site Investigation
MCB Camp Lejeune, North Carolina

Station ID	IR95C-MW01	IR95C-MW02	IR95C-MW03
Sample Date	3/10/2006	3/10/2006	3/9/2006
Field Parameters			
Dissolved Oxygen (mg/l)	8.58	4.46	10.17
Depth to Water (ft)	12.96	13.74	12.11
Oxidation Reduction Potential (mV)	313	345	300
pH	4.58	4.4	5
Specific Conductivity (ms/cm)	0.092	0.1	0.106
Temperature (C)	16.78	16	14.95
Turbidity (NTU)	2.15	0.68	5.7
Volume (gal)	7.5	9.5	7.25

TABLE 6-3

Concentrations of VOCs, SVOCs, Pesticides, Metals and Geochemical Parameters in Groundwater at Lyman Road

Site 95 Site Investigation

MCB Camp Lejeune, North Carolina

Station ID	Units	**NC2LGW (May2005)**	IR95C-MW01	IR95C-MW02	IR95C-MW03
Sample ID			IR95C-GW01-06A	IR95C-GW02-06A	IR95C-GW03-06A
Sample Date			03/10/06	03/10/06	03/09/06
Chemical Name					
VOCs (µg/L)					
Chloroform	µg/L	70	12	2	0.56
SVOCs (µg/L)					
No Detections					
PEST/PCBs (µg/L)					
No Detections					
Total Metals (µg/L)					
Aluminum	µg/L	--	222	352	495
Arsenic	µg/L	50	10 U	10 U	11
Copper	µg/L	1,000	25 U	25 U	9.6 J
Iron	µg/L	300	112	100 U	188
Potassium	µg/L	--	1,500 J	1,190 J	2,850 J
Sodium	µg/L	--	10,500	12,200	12,200
Wet Chemistry (mg/L)					
Chloride	mg/L	250	19	18	16
Nitrate	mg/L	10	1.3 J	0.64 J	0.13 R
Sulfate	mg/L	250	8.3	12	12
Total organic carbon (TOC)	mg/L	--	10	10	10

Notes:

U- Analyte not detected

J- Reported value is estimated

R- Unreliable result

Shading represents exceedance of NC2L Groundwater criteria

VOCs- Volatile Organic Compounds

SVOCs- Semi- Volatile Organic Compounds

PEST/PCBs- Pesticides/Polychlorinated Biphenyls

TABLE 6-4
Concentrations of VOCs, SVOCs, Pesticides, PCBs, and Metals in Surface Soil at Lyman Road
Site 95 Site Investigation
MCB Camp Lejeune, North Carolina

Station ID	Units	Surface Soil BaseWide Background 2002	Region 9 PRGs - Residential Soil	10^{-4} Cancer Risk Concentration	NCSSL (May2005)	IR95C-IS100			IR95C-IS101			IR95C-IS102		IR95C-IS103	IR95C-IS104	IR95C-IS105	IR95C-IS106
Sample ID						IR95C-IS100-0-1-06D-2	IR95C-IS100-0-1-06D-1	IR95C-IS100D-0-1-06D-1	IR95C-IS101-0-1-06D-2	IR95C-IS101D-0-1-06D-2	IR95C-IS101-0-1-06D-1	IR95C-IS102-0-1-06D-2	IR95C-IS102-0-1-06D-1	IR95C-IS103-0-1-06D-2	IR95C-IS104-0-1-06D-2	IR95C-IS105-0-1-06D-2	IR95C-IS106-0-1-06D-2
Sample Date						10/02/06	10/03/06	10/03/06	10/02/06	10/02/06	10/03/06	10/02/06	10/03/06	10/02/06	10/02/06	10/02/06	10/02/06
Chemical Name																	
VOCs (µg/kg)																	
Acetone	µg/kg	--	14,000,000	1,400,000,000	2,810	NA	140	130	NA	NA	70	NA	13 U	NA	NA	NA	NA
Trichlorofluoromethane(Freon-11)	µg/kg	--	390,000	39,000,000	31,500	NA	15 UJ	14 UJ	NA	NA	18 UJ	NA	13 UJ	NA	NA	NA	NA
SVOCs (µg/kg)																	
4-Methylphenol	µg/kg	--	310,000	31,000,000	17.4	360 U	NA	NA	420 U	410 U	NA	340 U	NA	340 U	380 U	350 U	350 U
Acenaphthylene	µg/kg	--	56,000	5,600,000	11,400	360 U	NA	NA	420 U	410 U	NA	340 U	NA	340 U	380 U	350 U	350 U
Anthracene	µg/kg	--	22,000,000	2,200,000,000	995,000	360 U	NA	NA	420 U	410 U	NA	340 U	NA	340 U	380 U	350 U	350 U
Benzaldehyde	µg/kg	--	6,100,000	610,000,000	--	54 J	NA	NA	100 J	110 J	NA	340 UJ	NA	340 UJ	380 UJ	38 J	70 J
Benzo(a)anthracene	µg/kg	--	620	62,000	343	360 U	NA	NA	420 U	410 U	NA	340 U	NA	340 U	380 U	350 U	350 U
Benzo(a)pyrene	µg/kg	--	62	6,200	92.8	360 UJ	NA	NA	420 U	410 UJ	NA	340 U	NA	340 U	380 U	350 U	350 UJ
Benzo(b)fluoranthene	µg/kg	--	620	62,000	1,180	360 UJ	NA	NA	420 U	410 UJ	NA	340 U	NA	340 U	380 U	350 U	350 UJ
Benzo(g,h,i)perylene	µg/kg	--	2,300,000	230,000,000	6,720,000	360 UJ	NA	NA	420 UJ	410 UJ	NA	340 U	NA	340 UJ	380 U	350 U	350 UJ
Benzo(k)fluoranthene	µg/kg	--	6,200	620,000	11,800	360 UJ	NA	NA	420 U	410 UJ	NA	340 U	NA	340 U	380 U	350 U	350 UJ
Chrysene	µg/kg	--	62,000	6,200,000	38,150	360 U	NA	NA	420 U	410 U	NA	340 U	NA	340 U	380 U	350 U	350 U
Di-n-butylphthalate	µg/kg	--	6,100,000	610,000,000	24,800	360 U	NA	NA	44 J	42 J	NA	340 U	NA	39 J	51 J	96 J	350 U
Fluoranthene	µg/kg	--	2,300,000	230,000,000	276,000	360 U	NA	NA	420 U	410 U	NA	340 U	NA	340 U	380 U	350 U	350 U
Indeno(1,2,3-cd)pyrene	µg/kg	--	620	62,000	3,320	360 UJ	NA	NA	420 U	410 UJ	NA	340 U	NA	340 U	380 U	350 U	350 UJ
Phenanthrene	µg/kg	--	2,300,000	230,000,000	59,600	360 U	NA	NA	420 U	410 U	NA	340 U	NA	340 U	380 U	350 U	350 U
Pyrene	µg/kg	--	2,300,000	230,000,000	286,000	360 U	NA	NA	420 U	410 U	NA	340 U	NA	340 U	380 U	350 U	350 U
bis(2-Ethylhexyl)phthalate	µg/kg	--	35,000	3,500,000	6,670	120 UJ	NA	NA	110 U	140 UJ	NA	110 J	NA	100 U	150 U	120 U	100 UJ
PEST/PBCs (µg/kg)																	
4,4'-DDD	µg/kg	--	2,400	240,000	129	3.6 U	NA	NA	4.3 U	4.1 U	NA	3.4 U	NA	3.4 U	3.8 U	3.5 U	3.5 U
4,4'-DDE	µg/kg	--	1,700	170,000	--	3 J	NA	NA	4.3 U	4.1 U	NA	3.4 U	NA	3.4 U	3.8 U	3.5 U	3.5 U
4,4'-DDT	µg/kg	--	1,700	170,000	1,360	3.4 J	NA	NA	4.3 U	4.1 U	NA	3.4 U	NA	3.4 U	3.8 U	3.5 U	3.5 U
Aldrin	µg/kg	--	29	2,900	--	1.9 U	NA	NA	2.2 U	2.1 U	NA	1.8 U	NA	1.8 U	2 U	1.8 U	1.8 U
Endosulfan sulfate	µg/kg	--	370,000	37,000,000	--	3.6 U	NA	NA	4.3 U	4.1 U	NA	3.4 U	NA	3.4 U	3.8 U	3.5 U	3.5 U
Endrin	µg/kg	--	18,000	1,800,000	440	3.6 U	NA	NA	4.3 U	4.1 U	NA	3.4 U	NA	3.4 U	3.8 U	3.5 U	3.5 U
Endrin aldehyde	µg/kg	--	18,000	1,800,000	--	3.6 U	NA	NA	3.7 J	4.1 U	NA	3.4 U	NA	3.4 U	3.8 U	3.5 U	3.5 U
Endrin ketone	µg/kg	--	18,000	1,800,000	--	3.6 U	NA	NA	4.3 U	4.1 U	NA	3.4 U	NA	3.4 U	3.8 U	3.5 U	3.5 U
Heptachlor epoxide	µg/kg	--	53	5,300	6.34	1.9 U	NA	NA	2.2 U	2.1 U	NA	1.8 U	NA	1.8 U	2 U	1.8 U	1.8 U
alpha-Chlordane	µg/kg	--	1,600	160,000	--	1.9 U	NA	NA	2.2 U	2.1 U	NA	1.8 U	NA	1.8 U	2 U	1.8 U	1.8 U
gamma-Chlordane	µg/kg	--	1,600	160,000	--	1.9 U	NA	NA	2.2 U	2.1 U	NA	1.8 U	NA	1.8 U	2 U	1.8 U	1.8 U
Total Metals (mg/kg)																	
Aluminum	mg/kg	8,965	76,000	7,600,000	--	1,020	NA	NA	1,220	1,180	NA	1,980	NA	3,280	5,280	1,060	509
Antimony	mg/kg	0.564	31	3,100	5.42	0.36 UJ	NA	NA	0.49 UJ	0.37 UJ	NA	0.13 UJ	NA	0.069 UJ	4.9 UJ	0.056 UJ	4.4 UJ
Arsenic	mg/kg	0.879	0.39	39	5.24	***6.1***	NA	NA	***2.4***	***1.8***	NA	***15.4***	NA	1 U	***1.6***	0.61 U	0.2 U
Barium	mg/kg	19.4	5,400	540,000	848	11.6 J	NA	NA	17.1 J	14.8 J	NA	16.4 J	NA	6.6 J	12 J	7.7 J	4.4 J
Beryllium	mg/kg	0.252	150	15,000	3.38	0.031 J	NA	NA	0.038 J	0.037 J	NA	0.054 J	NA	0.073 J	0.063 J	0.023 J	0.014 J
Calcium	mg/kg	33,240	--	--	--	1,060	NA	NA	2,290	1,680	NA	10,600 J	NA	19,500	3,350	243 J	312 J
Chromium	mg/kg	8.93	30	3,000	27.2	1.5	NA	NA	1.7	1.6	NA	2.1 J	NA	5.6	6.1	1.2	1
Cobalt	mg/kg	0.412	900	90,000	--	0.14 U	NA	NA	0.18 U	0.17 U	NA	0.22 J	NA	0.43 J	0.33 J	0.091 U	0.082 U
Copper	mg/kg	11.2	3,100	310,000	704	3.5 U	NA	NA	4.6 U	3.8 U	NA	2.9 U	NA	3.8 U	5.2 U	3.4 U	2.9 U
Iron	mg/kg	6,097	23,000	2,300,000	151	626	NA	NA	795	743	NA	1,000 J	NA	2,590	4,680	515	321
Lead	mg/kg	25.8	400	40,000	270	11.9	NA	NA	13.6	12.6	NA	2.5	NA	3.1	9.6	6.1	6.6
Magnesium	mg/kg	804	--	--	--	122 J	NA	NA	232 J	179 J	NA	449 J	NA	464	280 J	48 J	48.9 J
Manganese	mg/kg	43.8	1,800	180,000	65.2	7.3	NA	NA	5.9	6.4	NA	18.9 J	NA	41.1	46.6	5.1	4.4
Mercury	mg/kg	0.12	23	2,300	0.015	0.069 J-	NA	NA	0.074 J-	0.057 J-	NA	0.095 UJ	NA	0.083 UJ	0.01 J-	0.089 UJ	0.093 UJ
Nickel	mg/kg	1.65	1,600	160,000	56.4	0.64 U	NA	NA	1.1 J	0.92 J	NA	0.82 J	NA	1.3 J	1.6 J	0.5 U	0.33 U
Potassium	mg/kg	384	--	--	--	114 J	NA	NA	98.3 J	88.8 J	NA	101 J	NA	315 J	261 J	64.7 J	55.7 U
Silver	mg/kg	0.372	390	39,000	0.217	0.015 U	NA	NA	0.041 U	0.028 U	NA	0.051 U	NA	0.028 U	0.017 U	0.76 U	0.03 U
Sodium	mg/kg	--	--	--	--	34.7 U	NA	NA	71.4 U	41.5 U	NA	37.4 UJ	NA	59.8 U	30.1 U	20 U	18.4 U
Vanadium	mg/kg	28.5	78	7,800	--	2.1 J	NA	NA	3.2 J	2.9 J	NA	2.8 J	NA	9.9	10	1.9 J	1.7 J
Zinc	mg/kg	31.2	23,000	2,300,000	550	5.1 U	NA	NA	8.9 U	7.3 U	NA	2.9 UJ	NA	6.8 U	14.2	2.5 U	3.7 U

Notes:
Shading Exceeds NCSSLs (North Carolina Soil Screening Levels)
Bold Frame Exceeds Basewide Background Concentrations
Bold and Italicized Exceeds Region 9 PRGs
U- Analyte not detected
J- Reported value is estimated
J- - Reported value is biased low
UJ- Analyte not detected. Quantiation limit is imprecise
NA- Not analyzed
VOCs- Volatile Organic Compounds
SVOCs- Semi-Volatile Organic Compounds
PEST/PCBs- Pesticide/Polychlorinated Biphenyls

TABLE 6-4
Concentrations of VOCs, SVOCs, Pesticides, PCBs, and Metals in Surface Soil at Lyman Road
Site 95 Site Investigation
MCB Camp Lejeune, North Carolina

Station ID	Units	Surface Soil BaseWide Background 2002	Region 9 PRGs - Residential Soil	10^{-4} Cancer Risk Concentration	NCSSL (May2005)	IR95C-IS107	IR95C-IS108	IR95C-IS109	IR95C-IS110	IR95C-IS111	IR95C-IS112		IR95C-IS113	IR95C-IS114	IR95C-IS115	IR95C-IS116	IR95C-IS117
Sample ID						IR95C-IS107-0-1-06D-2	IR95C-IS108-0-1-06D-2	IR95C-IS109-0-1-06D-2	IR95C-IS110-0-1-06D-2	IR95C-IS111-0-1-06D-2	IR95C-IS112-0-1-06D-2	IR95C-IS112D-0-1-06D-2	IR95C-IS113-0-1-06D-2	IR95C-IS114-0-1-06D-2	IR95C-IS115-0-1-06D-2	IR95C-IS116-0-1-06D-2	IR95C-IS117-0-1-06D-2
Sample Date						10/02/06	10/02/06	10/02/06	10/02/06	10/02/06	10/02/06	10/02/06	10/02/06	10/02/06	10/02/06	10/02/06	10/02/06
Chemical Name																	
VOCs (µg/kg)																	
Acetone	µg/kg	–	14,000,000	1,400,000,000	2,810	NA	NA	NA	NA	NA	NA	NA	NA	NA	NA	NA	NA
Trichlorofluoromethane(Freon-11)	µg/kg	–	390,000	39,000,000	31,500	NA	NA	NA	NA	NA	NA	NA	NA	NA	NA	NA	NA
SVOCs (µg/kg)																	
4-Methylphenol	µg/kg	–	310,000	31,000,000	17.4	350 U	370 U	350 U	360 U	350 U	350 U	350 U	350 U	340 U	340 U	350 U	370 U
Acenaphthylene	µg/kg	–	56,000	5,600,000	11,400	350 U	370 U	350 U	360 U	350 U	350 U	350 U	350 U	340 U	340 U	350 U	370 U
Anthracene	µg/kg	–	22,000,000	2,200,000,000	995,000	350 U	370 U	350 U	360 U	350 U	350 U	350 U	350 U	340 U	340 U	350 U	370 U
Benzaldehyde	µg/kg	–	6,100,000	610,000,000	–	350 U	70 J	350 UJ	360 UJ	350 U	350 UJ	350 UJ	350 UJ	340 UJ	340 UJ	350 UJ	370 UJ
Benzo(a)anthracene	µg/kg	–	620	62,000	343	350 U	370 U	350 U	360 U	350 U	350 U	350 U	350 U	340 U	340 U	350 U	370 U
Benzo(a)pyrene	µg/kg	–	62	6,200	92.8	350 U	370 U	350 U	360 U	350 U	350 U	350 U	350 U	340 U	340 U	350 U	370 U
Benzo(b)fluoranthene	µg/kg	–	620	62,000	1,180	350 U	370 U	350 U	360 U	350 U	350 U	350 U	350 U	340 U	340 U	350 U	370 U
Benzo(g,h,i)perylene	µg/kg	–	2,300,000	230,000,000	6,720,000	350 U	370 U	350 U	360 UJ	350 U	350 U	350 U	350 U	340 UJ	340 U	350 U	370 U
Benzo(k)fluoranthene	µg/kg	–	6,200	620,000	11,800	350 U	370 U	350 U	360 U	350 U	350 U	350 U	350 U	340 U	340 U	350 U	370 U
Chrysene	µg/kg	–	62,000	6,200,000	38,150	350 U	370 U	350 U	360 U	350 U	350 U	350 U	350 U	340 U	340 U	350 U	370 U
Di-n-butylphthalate	µg/kg	–	6,100,000	610,000,000	24,800	350 U	370 U	350 U	42 J	350 U	350 U	350 U	67 J	60 J	35 J	350 U	49 J
Fluoranthene	µg/kg	–	2,300,000	230,000,000	276,000	350 U	370 U	350 U	360 U	350 U	350 U	350 U	350 U	340 U	340 U	350 U	370 U
Indeno(1,2,3-cd)pyrene	µg/kg	–	620	62,000	3,320	350 U	370 U	350 U	360 U	350 U	350 U	350 U	350 U	340 U	340 U	350 U	370 U
Phenanthrene	µg/kg	–	2,300,000	230,000,000	59,600	350 U	370 U	350 U	360 U	350 U	350 U	350 U	350 U	340 U	340 U	350 U	370 U
Pyrene	µg/kg	–	2,300,000	230,000,000	286,000	350 U	370 U	350 U	360 U	350 U	350 U	350 U	350 U	340 U	340 U	350 U	370 U
bis(2-Ethylhexyl)phthalate	µg/kg	–	35,000	3,500,000	6,670	70 J	77 J	84 J	110 U	49 J	63 J	69 J	150 U	100 U	68 U	74 U	94 U
PEST/PBCs (µg/kg)																	
4,4'-DDD	µg/kg	–	2,400	240,000	129	3.5 U	3.7 U	3.5 U	3.6 U	3.5 U	3.4 U	3.5 U	3.5 U	3.4 U	3.4 U	3.5 U	3.7 U
4,4'-DDE	µg/kg	–	1,700	170,000	–	3.5 U	3.7 U	3.5 U	3.6 U	3.5 U	3.4 U	3.5 U	3.5 U	3.4 U	3.4 U	3.5 U	2.1 J
4,4'-DDT	µg/kg	–	1,700	170,000	1,360	3.5 U	3.2 J	3.5 U	3.6 U	3.5 U	3.4 U	3.5 U	3.5 U	3.4 U	3.4 U	3.5 U	3.7 U
Aldrin	µg/kg	–	29	2,900	–	1.8 U	1.9 U	1.8 U	1.8 U	1.8 U	1.8 U	1.8 U	1.8 U	1.8 U	1.8 U	1.8 U	1.9 U
Endosulfan sulfate	µg/kg	–	370,000	37,000,000	–	3.5 U	25 J	3.5 U	3.6 U	4.2 J	3.4 U	3.5 U	3.5 U	3.4 U	3.4 U	3.5 U	3.7 U
Endrin	µg/kg	–	18,000	1,800,000	440	3.5 U	3.7 U	3.5 U	3.6 U	3.5 U	3.4 U	3.5 U	3.5 U	3.4 U	3.4 U	3.5 U	3.7 U
Endrin aldehyde	µg/kg	–	18,000	1,800,000	–	3.5 U	3.7 U	3.5 U	3.6 U	3.5 U	3.4 U	3.5 U	3.5 U	3.4 U	3.4 U	3.5 U	3.7 U
Endrin ketone	µg/kg	–	18,000	1,800,000	–	3.5 U	7 J	3.5 U	3.6 U	3.2 J	3.4 U	3.5 U	3.5 U	3.4 U	3.4 U	3.5 U	2.3 J
Heptachlor epoxide	µg/kg	–	53	5,300	6.34	1.8 U	1.5 J	1.8 U	1.8 U	1.8 U	1.8 U	1.8 U	1.8 U	1.8 U	1.8 U	1.8 U	1.9 U
alpha-Chlordane	µg/kg	–	1,600	160,000	–	1.8 U	1.9 U	1.8 U	1.8 U	1.8 U	1.8 U	1.8 U	1.8 U	1.8 U	1.8 U	1.8 U	1.9 U
gamma-Chlordane	µg/kg	–	1,600	160,000	–	1.8 U	1.9 U	1.8 U	1.8 U	1.8 U	1.8 U	1.8 U	1.8 U	1.8 U	1.8 U	1.8 U	0.94 J
Total Metals (mg/kg)																	
Aluminum	mg/kg	8,965	76,000	7,600,000	–	270	604	438	3,010	560	356	406	1,730	912	563	3,860	823
Antimony	mg/kg	0.564	31	3,100	5.42	4.6 UJ	0.17 UJ	4.4 UJ	4.5 UJ	0.15 UJ	0.064 UJ	0.055 UJ	4.5 UJ	4.3 UJ	4.4 UJ	4.5 UJ	4.6 UJ
Arsenic	mg/kg	0.879	0.39	39	5.24	0.11 U	0.19 U	0.2 U	0.6 U	0.21 U	0.22 U	0.17 U	0.49 U	0.15 U	0.092 U	0.59 U	0.26 U
Barium	mg/kg	19.4	5,400	540,000	848	3 J	8 J	4.4 J	6.6 J	8.3 J	1.6 J	1.9 J	3 J	5.7 J	2.4 U	7.5 J	40.8
Beryllium	mg/kg	0.252	150	15,000	3.38	0.022 J	0.022 J	0.018 J	0.041 J	0.023 J	0.023 J	0.025 J	0.021 J	0.028 J	0.017 J	0.036 J	0.026 J
Calcium	mg/kg	33,240	–	–	–	222 J	728 J	107 J	2,350	129 J	45.5 J	52.5 J	5,640	79 J	90.6 J	804	2,870
Chromium	mg/kg	8.93	30	3,000	27.2	0.71 UJ	1 UJ	0.9 UJ	4.1	0.89 UJ	0.86 UJ	0.96 UJ	2.6	1.1	1.1	4.4	1.2
Cobalt	mg/kg	0.412	900	90,000	–	0.071 U	0.1 U	0.087 U	0.33 J	0.077 U	0.064 U	0.077 U	0.12 U	0.091 U	0.089 U	0.28 J	0.19 U
Copper	mg/kg	11.2	3,100	310,000	704	2.9 U	3.4 U	2.3 U	10	2.6 U	2.3 U	2.3 U	3.5 U	2.7 U	3.3 U	4.2 U	5.5 U
Iron	mg/kg	6,097	23,000	2,300,000	151	233 J	343 J	294 J	2,750	376 J	289 J	323 J	1,730	437	415	2,560	653
Lead	mg/kg	25.8	400	40,000	270	3.7	5.7	1.4	6.1	7	2.5	3	3.7	5.9	6.8	7.9	13.7
Magnesium	mg/kg	804	–	–	–	30.9 J	65.5 J	19.4 J	164 J	33.7 J	15.3 J	18.8 J	146 J	33.5 J	26.8 J	150 J	133 J
Manganese	mg/kg	43.8	1,800	180,000	65.2	6.5 J	6.8 J	7.1 J	25.5	5.6 J	6.5 J	7.9 J	7.1	5.8	5.3	26.6	119
Mercury	mg/kg	0.12	23	2,300	0.015	0.085 UJ	0.09 UJ	0.089 UJ	0.01 J-	0.011 J-	0.087 UJ	0.096 UJ	0.089 UJ	0.091 UJ	0.094 UJ	0.092 UJ	0.04 J-
Nickel	mg/kg	1.65	1,600	160,000	56.4	0.22 UJ	0.4 UJ	0.16 UJ	0.98 J	0.3 UJ	0.21 UJ	0.22 UJ	0.55 U	0.33 U	0.34 U	1.1 J	0.95 J
Potassium	mg/kg	384	–	–	–	45.2 UJ	137 J	35.6 UJ	167 J	52 UJ	32.1 UJ	46 UJ	75 J	42.8 U	37.2 U	147 J	125 J
Silver	mg/kg	0.372	390	39,000	0.217	0.77 U	0.032 U	0.02 U	0.018 U	0.028 U	0.014 U	0.028 U	0.032 U	0.71 U	0.022 U	0.036 U	0.77 U
Sodium	mg/kg	–	–	–	–	28 UJ	34.3 UJ	22.9 UJ	26 U	26.3 UJ	23.8 UJ	24.6 UJ	24.1 U	17.5 U	17.1 U	63 U	38.2 U
Vanadium	mg/kg	28.5	78	7,800	–	0.98 J	1.5 J	1.4 J	6.4	1.4 J	1.6 J	1.7 J	3.7 J	1.7 J	1.8 J	6.9	2.4 J
Zinc	mg/kg	31.2	23,000	2,300,000	550	3.3 UJ	4.6 UJ	2.3 UJ	26.5	3 UJ	2.7 UJ	2.9 UJ	4 U	2.9 U	3.1 U	15.7	9.2 U

Notes:
Shading Exceeds NCSSLs (North Carolina Soil Screening Levels)
Bold Frame Exceeds Basewide Background Concentrations
Bold and Italicized Exceeds Region 9 PRGs
U- Analyte not detected
J- Reported value is estimated
J- - Reported value is biased low
UJ- Analyte not detected. Quantiation limit is imprecise
NA- Not analyzed
VOCs- Volatile Organic Compounds
SVOCs- Semi-Volatile Organic Compounds
PEST/PCBs- Pesticide/Polychlorinated Biphenyls

TABLE 6-4
Concentrations of VOCs, SVOCs, Pesticides, PCBs, and Metals in Surface Soil at Lyman Road
Site 95 Site Investigation
MCB Camp Lejeune, North Carolina

Station ID	Units	Surface Soil BaseWide Background 2002	Region 9 PRGs - Residential Soil	10^{-4} Cancer Risk Concentration	NCSSL (May2005)	IR95C-IS118	IR95C-IS119	IR95C-IS120	IR95C-IS121	IR95C-IS122	IR95C-IS123	IR95C-IS124	IR95C-IS125	IR95C-IS126		IR95C-IS127
Sample ID						IR95C-IS118-0-1-06D-2	IR95C-IS119-0-1-06D-2	IR95C-IS120-0-1-06D-2	IR95C-IS121-0-1-06D-2	IR95C-IS122-0-1-06D-2	IR95C-IS123-0-1-06D-2	IR95C-IS124-0-1-06D-2	IR95C-IS125-0-1-06D-2	IR95C-IS126-0-1-06D-2	IR95C-IS126D-0-1-06D-2	IR95C-IS127-0-1-06D-2
Sample Date						10/02/06	10/02/06	10/02/06	10/02/06	10/02/06	10/02/06	10/02/06	10/02/06	10/02/06	10/02/06	10/02/06
Chemical Name																
VOCs (µg/kg)																
Acetone	µg/kg	–	14,000,000	1,400,000,000	2,810	NA	NA	NA	NA	NA	NA	NA	NA	NA	NA	NA
Trichlorofluoromethane(Freon-11)	µg/kg	–	390,000	39,000,000	31,500	NA	NA	NA	NA	NA	NA	NA	NA	NA	NA	NA
SVOCs (µg/kg)																
4-Methylphenol	µg/kg	–	310,000	31,000,000	17.4	400 U	360 U	390 U	580 U	350 U	410 U	400 U	560 U	380 U	460 U	390 U
Acenaphthylene	µg/kg	–	56,000	5,600,000	11,400	400 U	360 U	390 U	580 U	350 U	130 J	400 U	560 U	380 U	460 U	390 U
Anthracene	µg/kg	–	22,000,000	2,200,000,000	995,000	400 U	360 U	390 U	580 U	350 U	49 J	400 U	560 U	380 U	460 U	390 U
Benzaldehyde	µg/kg	–	6,100,000	610,000,000	–	400 UJ	360 U	80 J	150 J	350 UJ	72 J	47 J	69 J	130 J	200 J	190 J
Benzo(a)anthracene	µg/kg	–	620	62,000	343	400 U	360 U	390 U	580 U	350 U	230 J	400 U	560 U	380 U	460 U	390 U
Benzo(a)pyrene	µg/kg	–	62	6,200	92.8	400 UJ	360 U	390 U	580 U	350 U	***530 J***	400 U	560 UJ	380 UJ	460 UJ	390 UJ
Benzo(b)fluoranthene	µg/kg	–	620	62,000	1,180	400 UJ	360 U	390 U	580 U	350 U	***680 J***	400 U	560 UJ	380 UJ	460 UJ	390 UJ
Benzo(g,h,i)perylene	µg/kg	–	2,300,000	230,000,000	6,720,000	400 UJ	360 U	390 U	580 U	350 U	140 J	400 U	560 UJ	380 UJ	460 UJ	390 UJ
Benzo(k)fluoranthene	µg/kg	–	6,200	620,000	11,800	400 UJ	360 U	390 U	580 U	350 U	280 J	400 U	560 UJ	380 UJ	460 UJ	390 UJ
Chrysene	µg/kg	–	62,000	6,200,000	38,150	400 U	360 U	390 U	580 U	350 U	420	400 U	560 U	380 U	460 U	390 U
Di-n-butylphthalate	µg/kg	–	6,100,000	610,000,000	24,800	400 U	360 U	390 U	580 U	350 U	51 J	51 J	560 U	47 J	59 J	61 J
Fluoranthene	µg/kg	–	2,300,000	230,000,000	276,000	400 U	360 U	390 U	580 U	350 U	1,500	400 U	560 U	380 U	460 U	390 U
Indeno(1,2,3-cd)pyrene	µg/kg	–	620	62,000	3,320	400 UJ	360 U	390 U	580 U	350 U	110 J	400 U	560 UJ	380 UJ	460 UJ	390 UJ
Phenanthrene	µg/kg	–	2,300,000	230,000,000	59,600	400 U	360 U	390 U	580 U	350 U	1,200	400 U	560 U	380 U	460 U	390 U
Pyrene	µg/kg	–	2,300,000	230,000,000	286,000	400 U	360 U	390 U	580 U	350 U	3,300	400 U	560 U	380 U	460 U	390 U
bis(2-Ethylhexyl)phthalate	µg/kg	–	35,000	3,500,000	6,670	110 J	71 J	71 J	110 J	71 J	120 UJ	120 U	140 UJ	160 UJ	130 UJ	220 UJ
PEST/PBCs (µg/kg)																
4,4'-DDD	µg/kg	–	2,400	240,000	129	3.9 U	3.6 U	3.9 U	5.8 U	3.5 U	4 U	2.5 J	5.6 UJ	3.8 U	4.6 U	3.8 U
4,4'-DDE	µg/kg	–	1,700	170,000	–	3.9 U	2.1 J	2.1 J	5.8 U	3.5 U	4 U	4 U	5.6 UJ	3.8 U	2.8 J	3.8 U
4,4'-DDT	µg/kg	–	1,700	170,000	1,360	3.9 U	3.6 U	4.6 J	5.8 U	3.5 U	4 U	4 U	5.6 UJ	3.8 U	4.6 J	4.8 J
Aldrin	µg/kg	–	29	2,900	–	2 U	1.9 U	2 U	2.7 J	1.8 U	2.1 U	2.1 U	2.9 UJ	2 U	2.4 U	2 U
Endosulfan sulfate	µg/kg	–	370,000	37,000,000	–	6 J	7.6	33 J	5.8 U	3.5 U	2.7 J	4 U	5.6 UJ	1.9 J	4.6 U	3.8 U
Endrin	µg/kg	–	18,000	1,800,000	440	3.9 U	3.6 U	3.9 U	5.8 U	3.5 U	4 U	4 U	5.6 UJ	3.8 U	4.6 U	3.8 U
Endrin aldehyde	µg/kg	–	18,000	1,800,000	–	3.9 U	3.6 U	3.9 U	5.8 U	3.5 U	2.8 J	4 U	5.6 UJ	3.8 U	4.6 U	4.8 J
Endrin ketone	µg/kg	–	18,000	1,800,000	–	3.9 U	5.9	13 J	8.4 J	3.5 U	4 U	6.2 J	7.5 J	2.6 J	4.8 J	3.8 U
Heptachlor epoxide	µg/kg	–	53	5,300	6.34	2 U	1.9 U	2 U	3 U	1.8 U	2.1 U	2.1 U	2.9 UJ	2 U	2.4 U	2 U
alpha-Chlordane	µg/kg	–	1,600	160,000	–	2 U	1.9 U	1.4 J	460	1.8 U	2.1 U	2.1 U	2.9 UJ	2 U	2.4 U	2 U
gamma-Chlordane	µg/kg	–	1,600	160,000	–	2 U	1.9 U	2 U	390 J	1.8 U	2.1 U	2.1 U	2.9 UJ	2 U	2.4 U	2 U
Total Metals (mg/kg)																
Aluminum	mg/kg	8,965	76,000	7,600,000	–	1,720	1,160	1,380	12,400	3,700	1,480	1,210	1,390	1,050	1,420	1,770
Antimony	mg/kg	0.564	31	3,100	5.42	0.2 UJ	0.54 UJ	0.21 UJ	7.4 UJ	4.6 UJ	0.17 UJ	5.3 UJ	7 UJ	0.18 UJ	0.44 UJ	0.046 UJ
Arsenic	mg/kg	0.879	0.39	39	5.24	0.45 U	1.1 U	0.59 U	2 U	***2.1***	0.5 U	0.33 U	0.35 U	0.25 U	0.41 U	0.44 U
Barium	mg/kg	19.4	5,400	540,000	848	30.4 J	25 J	19.2 J	40.9 J	13.8 J	34.9	20.8	16.3 J	12.4 J	16.5 J	18.4
Beryllium	mg/kg	0.252	150	15,000	3.38	0.037 J	0.036 J	0.039 J	0.12 J	0.16 J	0.032 J	0.03 J	0.03 J	0.024 J	0.029 J	0.037 J
Calcium	mg/kg	33,240	–	–	–	2,040 J	1,690 J	982 J	2,800 J	60,800 J	1,300	2,740	1,220	969	1,370	1,750
Chromium	mg/kg	8.93	30	3,000	27.2	2.1 J	1.6 J	1.9 J	11.7 J	6.6 J	1.9	1.7	2.5	2.1	2.2	2.4
Cobalt	mg/kg	0.412	900	90,000	–	0.21 J	0.2 J	0.18 J	0.78 J	1 J	0.22 J	0.18 U	0.21 U	0.16 U	0.22 U	0.26 J
Copper	mg/kg	11.2	3,100	310,000	704	4.8 U	3.7 U	4.7 U	7.8 U	5.1 U	5 U	5.7 U	6.1 U	4.1 U	5.5 U	5 U
Iron	mg/kg	6,097	23,000	2,300,000	151	1,140 J	777 J	1,190 J	6,750 J	3,970 J	1,130	972	895	747	937	1,290
Lead	mg/kg	25.8	400	40,000	270	8.8	10.3	19	19.6	4.8	15.2	8.8	10.1	8.9	10.7	13.9
Magnesium	mg/kg	804	–	–	–	247 J	159 J	149 J	576 J	1,340 J	168 J	219 J	251 J	188 J	240 J	207 J
Manganese	mg/kg	43.8	1,800	180,000	65.2	37.5 J	23.2 J	7.7 J	32.9 J	150 J	11.6	35.5	25.9	9.6	11.1	20.3
Mercury	mg/kg	0.12	23	2,300	0.015	0.081 J-	0.089 J-	0.034 J-	0.034 J-	0.094 UJ	0.054 J-	0.047 J-	0.066 J-	0.13 J-	0.16 J-	0.076 J-
Nickel	mg/kg	1.65	1,600	160,000	56.4	1.1 J	0.87 J	0.8 UJ	3.1 J	2.8 J	1.1 J	1.1 J	1.2 J	0.89 J	1.3 J	1.2 J
Potassium	mg/kg	384	–	–	–	216 J	109 J	166 J	523 J	822 J	137 J	167 J	181 J	165 J	161 J	137 J
Silver	mg/kg	0.372	390	39,000	0.217	0.84 U	0.76 U	0.022 U	0.076 U	0.049 U	0.88 U	0.88 U	0.032 U	0.053 U	0.08 U	0.028 U
Sodium	mg/kg	–	–	–	–	59.8 UJ	52.7 UJ	42.5 UJ	71.1 UJ	161 J	38.6 U	79.4 J	46.6 U	39.8 U	58 U	52.9 U
Vanadium	mg/kg	28.5	78	7,800	–	3.9 J	2.7 J	3.4 J	19.2	14.1	3.4 J	3.2 J	3.3 J	2.6 J	3.3 J	4.3
Zinc	mg/kg	31.2	23,000	2,300,000	550	14.5 J	6.6 UJ	7.2 UJ	29.1 J	44.8 J	12.7	15	16.2	11.4	16.4	11.6

Notes:
Shading Exceeds NCSSLs (North Carolina Soil Screening Levels)
Bold Frame Exceeds Basewide Background Concentrations
Bold and Italicized Exceeds Region 9 PRGs
U- Analyte not detected
J- Reported value is estimated
J- - Reported value is biased low
UJ- Analyte not detected. Quantiation limit is imprecise
NA- Not analyzed
VOCs- Volatile Organic Compounds
SVOCs- Semi-Volatile Organic Compounds
PEST/PCBs- Pesticide/Polychlorinated Biphenyls

TABLE 6-5
Concentrations of VOCs, SVOCs, Pesticides, PCBs, and Metals in Surface Soil at Lyman Road
Site 95 Site Investigation
MCB Camp Lejeune, North Carolina

Station ID	Units	Subsurface Soil BaseWide Background 2002	Region 9 PRGs - Residential Soil	10^{-6} Cancer Risk Concentration	NCSSL (May2005)	IR95C-IS100	IR95C-IS101		IR95C-IS102	IR95C-IS103	IR95C-IS105	IR95C-IS107	IR95C-IS109	IR95C-IS111
Sample ID						IR95C-IS100-3-4-06D-1	IR95C-IS101-3-4-06D-1	IR95C-IS101-3-4-06D-2	IR95C-IS102-3-4-06D-1	IR95C-IS103-3-4-06D-2	IR95C-IS105-3-4-06D-2	IR95C-IS107-3-4-06D-2	IR95C-IS109-3-4-06D-2	IR95C-IS111-3-4-06D-2
Sample Date						10/03/06	10/03/06	10/03/06	10/03/06	10/03/06	10/03/06	10/03/06	10/03/06	10/03/06
Chemical Name														
VOCs (µg/kg)														
2-Butanone	µg/kg	--	22,000,000	2,200,000,000	17,100	12 U	11 U	NA	10 U	NA	NA	NA	NA	NA
Acetone	µg/kg	--	14,000,000	1,400,000,000	2,810	12 U	11 U	NA	10 U	NA	NA	NA	NA	NA
Methylene chloride	µg/kg	--	9,100	910,000	20.2	12 U	11 U	NA	10 U	NA	NA	NA	NA	NA
SVOCs (µg/kg)														
Caprolactam	µg/kg	--	31,000,000	3,100,000,000	--	NA	NA	380 U	NA	360 U	370 U	360 U	370 U	380 UJ
Di-n-butylphthalate	µg/kg	--	6,100,000	610,000,000	24,800	NA	NA	380 U	NA	360 U	370 U	360 U	370 U	380 U
bis(2-Ethylhexyl)phthalate	µg/kg	--	35,000	3,500,000	6,670	NA	NA	50 J	NA	44 J	57 J	39 J	44 J	99 J
PEST/PCBs (µg/kg)														
4,4'-DDE	µg/kg	--	1,700	170,000	--	NA	NA	3.8 U	NA	3.6 U	3.7 U	3.6 U	3.7 U	3.7 U
4,4'-DDT	µg/kg	--	1,700	170,000	1,360	NA	NA	3.8 U	NA	3.6 U	3.7 U	3.6 U	3.7 U	3.7 U
Endrin aldehyde	µg/kg	--	18,000	1,800,000	--	NA	NA	3.8 U	NA	3.6 U	3.7 U	3.6 U	3.7 U	3.7 U
Methoxychlor	µg/kg	--	310,000	31,000,000	56,100	NA	NA	19 U	NA	18 U	19 U	18 U	19 U	19 U
Total Metals (mg/kg)														
Aluminum	mg/kg	13,061	76,000	7,600,000	--	NA	NA	11,100 J	NA	4,220 J	11,700 J	2,880 J	11,800 J	10,300
Antimony	mg/kg	0.392	31	3,100	5.42	NA	NA	4.9 UJ	NA	0.098 UJ	0.063 UJ	0.14 UJ	0.58 UJ	0.12 UJ
Arsenic	mg/kg	5.29	0.39	39	5.24	NA	NA	0.094 UJ	NA	***1.3 J-***	0.79 UJ	0.13 UJ	0.76 UJ	0.49 U
Barium	mg/kg	37.34	5,400	540,000	848	NA	NA	13.3 J	NA	6.4 J	16.9 J	5.8 J	14.6 J	12.6 J
Beryllium	mg/kg	0.432	150	15,000	3.38	NA	NA	0.099 J	NA	0.068 J	0.14 J	0.036 J	0.15 J	0.11 J
Cadmium	mg/kg	--	37	3,700	0.95	NA	NA	0.4 UJ	NA	0.38 UJ	0.4 UJ	0.37 UJ	0.4 UJ	0.39 U
Calcium	mg/kg	944	--	--	--	NA	NA	89.7 UJ	NA	36.1 UJ	400 UJ	370 UJ	400 UJ	390 UJ
Chromium	mg/kg	30.9	30	3,000	27.2	NA	NA	11 J	NA	6.3 J-	14.2 J	3 J-	14.2 J	11.4 J
Cobalt	mg/kg	2.33	900	90,000	--	NA	NA	0.71 J	NA	0.24 U	0.66 J	0.18 U	0.71 J	0.57 J
Copper	mg/kg	7.03	3,100	310,000	704	NA	NA	3.8 U	NA	3.2 U	4.8 U	2.6 U	4.5 U	4.1 U
Iron	mg/kg	16,984	23,000	2,300,000	151	NA	NA	3,040 J	NA	3,100 J	3,770 J	748 J	3,790 J	3,490 J
Lead	mg/kg	12.6	400	40,000	270	NA	NA	5.9 J	NA	3.3 J	6.5 J	3.7 J	5.8 J	6
Magnesium	mg/kg	1,022	--	--	--	NA	NA	341 J	NA	174 J	421 J	81.8 J	415 J	352 J
Manganese	mg/kg	23.6	1,800	180,000	65.2	NA	NA	7.1 J	NA	3.9 J	7 J	4.3 J	8.5 J	5.8 J
Mercury	mg/kg	0.096	23	2,300	0.015	NA	NA	0.099 U	NA	0.1 U	0.099 U	0.095 U	0.1 U	0.091 UJ
Nickel	mg/kg	4.73	1,600	160,000	56.4	NA	NA	2.4 J	NA	1.1 J	2.4 J	0.91 J	2.5 J	2.1 J
Potassium	mg/kg	1,043	--	--	--	NA	NA	459 J	NA	329 J	653 J	114 J	790 J	550 J
Silver	mg/kg	0.18	390	39,000	0.217	NA	NA	0.082 U	NA	0.024 U	0.045 U	0.03 U	0.023 U	0.77 U
Sodium	mg/kg	--	--	--	--	NA	NA	46 U	NA	30.5 U	43.7 U	24.1 U	36.8 U	38.5 UJ
Vanadium	mg/kg	44.7	78	7,800	--	NA	NA	15.4 J	NA	9.6 J	23.9 J	2.9 J	20.7 J	16.6
Zinc	mg/kg	21.5	23,000	2,300,000	550	NA	NA	5.8 U	NA	3.9 U	6.1 U	3.1 U	8.2 U	6.1 UJ

Notes:
Shading Exceeds NCSSLs (North Carolina Soil Screening Levels)
Bold Frame Exceeds Basewide Background Concentrations
Bold and Italicized Exceeds Region 9 PRGs
U- Analyte not detected
J- Reported value is estimated
J- - Reported value is biased low
UJ- Analyte not detected. Quantiation limit is imprecise
NA- Not analyzed
VOCs- Volatile Organic Compounds
SVOCs- Semi-Volatile Organic Compounds
PEST/PCBs- Pesticide/Polychlorinated Biphenyls

TABLE 6-5
Concentrations of VOCs, SVOCs, Pesticides, PCBs, and Metals in Surface Soil at Lyman Road
Site 95 Site Investigation
MCB Camp Lejeune, North Carolina

Station ID	Units	Subsurface Soil BaseWide Background 2002	Region 9 PRGs - Residential Soil	10^{-4} Cancer Risk Concentration	NCSSL (May2005)	IR95C-IS113		IR95C-IS115	IR95C-IS117	IR95C-IS119	IR95C-IS121	IR95C-IS123		IR95C-IS125	IR95C-IS127
Sample ID						IR95C-IS113-3-4-06D-2	IR95C-IS113D-3-4-06D-2	IR95C-IS115-3-4-06D-2	IR95C-IS117-3-4-06D-2	IR95C-IS119-3-4-06D-2	IR95C-IS121-3-4-06D-2	IR95C-IS123-3-4-06D-2	IR95C-IS123D-3-4-06D-2	IR95C-IS125-3-4-06D-2	IR95C-IS127-3-4-06D-2
Sample Date						10/03/06	10/03/06	10/03/06	10/03/06	10/03/06	10/03/06	10/03/06	10/03/06	10/03/06	10/03/06
Chemical Name															
VOCs (µg/kg)															
2-Butanone	µg/kg	--	22,000,000	2,200,000,000	17,100	NA	NA	NA	NA	NA	NA	NA	NA	NA	NA
Acetone	µg/kg	--	14,000,000	1,400,000,000	2,810	NA	NA	NA	NA	NA	NA	NA	NA	NA	NA
Methylene chloride	µg/kg	--	9,100	910,000	20.2	NA	NA	NA	NA	NA	NA	NA	NA	NA	NA
SVOCs (µg/kg)															
Caprolactam	µg/kg	--	31,000,000	3,100,000,000	--	360 U	360 U	380 UJ	380 UJ	360 UJ	360 UJ	370 UJ	380 UJ	360 UJ	380 UJ
Di-n-butylphthalate	µg/kg	--	6,100,000	610,000,000	24,800	360 U	360 U	56 J	380 U	360 U	360 U	370 U	380 U	360 U	380 U
bis(2-Ethylhexyl)phthalate	µg/kg	--	35,000	3,500,000	6,670	43 J	39 J	120 U	83 J	91 J	100 J	96 J	100 J	96 J	91 J
PEST/PCBs (µg/kg)															
4,4'-DDE	µg/kg	--	1,700	170,000	--	3.6 U	3.6 U	3.8 U	3.8 U	3.6 U	3.7 U	3.7 U	3.8 U	3.6 U	3.9 U
4,4'-DDT	µg/kg	--	1,700	170,000	1,360	3.6 U	3.6 U	3.8 U	3.8 U	3.6 U	3.7 U	5.1 J	3.8 U	3.6 U	3.9 U
Endrin aldehyde	µg/kg	--	18,000	1,800,000	--	3.6 U	3.6 U	3.8 U	3.8 U	3.6 U	3.7 U	2.3 J	3.8 U	3.6 U	3.9 U
Methoxychlor	µg/kg	--	310,000	31,000,000	56,100	18 U	18 U	20 U	20 U	18 U	19 U	47	23 J	19 U	20 U
Total Metals (mg/kg)															
Aluminum	mg/kg	13,061	76,000	7,600,000	--	6,020 J	6,320 J	13,200	21,300	846	5,480	2,360	2,580	2,000	21,600
Antimony	mg/kg	0.392	31	3,100	5.42	4.6 UJ	0.057 UJ	4.8 UJ	5 UJ	0.049 UJ	4.8 UJ	4.8 UJ	0.086 UJ	0.16 UJ	0.36 UJ
Arsenic	mg/kg	5.29	0.39	39	5.24	***1.2 J-***	0.96 UJ	***1.4***	***2.2***	0.079 U	***1.7***	0.072 U	0.18 U	0.12 U	***1.8***
Barium	mg/kg	37.34	5,400	540,000	848	9.7 J	9.9 J	14.1 J	18 J	2.4 J	7.3 J	19.2 J	24.7 J	3.6 J	20.7 J
Beryllium	mg/kg	0.432	150	15,000	3.38	0.097 J	0.096 J	0.08 J	0.12 J	0.02 J	0.068 J	0.038 J	0.044 J	0.031 J	0.11 J
Cadmium	mg/kg	--	37	3,700	0.95	0.38 UJ	0.37 UJ	0.4 U	0.42 U	0.37 U	0.4 U	0.4 U	0.39 U	0.38 U	0.42 U
Calcium	mg/kg	944	--	--	--	380 UJ	196 UJ	400 U	420 UJ	27.9 UJ	8.9 UJ	155 J	161 J	32.5 UJ	142 J
Chromium	mg/kg	30.9	30	3,000	27.2	8.8 J	9 J	13.1	20 J	1.8 J	12.3 J	2.4 J	2.5 J	2.7 J	19.8 J
Cobalt	mg/kg	2.33	900	90,000	--	0.4 U	0.44 J	0.69 J	1.1 J	0.13 J	0.38 J	0.14 J	0.15 J	0.15 J	1 J
Copper	mg/kg	7.03	3,100	310,000	704	4 U	3.6 U	4 U	5 U	2.1 U	3.3 U	2.9 U	3.3 U	2.8 U	5.1 U
Iron	mg/kg	16,984	23,000	2,300,000	151	4,500 J	3,930 J	6,850	11,600 J	408 J	3,880 J	1,070 J	1,180 J	983 J	9,830 J
Lead	mg/kg	12.6	400	40,000	270	4.3 J	4.3 J	6.1	6.9	2.4	4	3	3.4	3.2	7.9
Magnesium	mg/kg	1,022	--	--	--	247 J	263 J	310 J	491 J	33.2 J	185 J	54 J	60.6 J	52.4 J	551 J
Manganese	mg/kg	23.6	1,800	180,000	65.2	5.2 J	5.3 J	5.3	8.8 J	3.2 J	4.4 J	3.9 J	4.2 J	3.7 J	7.8 J
Mercury	mg/kg	0.096	23	2,300	0.015	0.039 J	0.099 U	0.11 UJ	0.012 J-	0.09 UJ	0.092 UJ	0.1 UJ	0.095 UJ	0.089 UJ	0.11 UJ
Nickel	mg/kg	4.73	1,600	160,000	56.4	1.4 J	1.5 J	2.5 J	3.9 J	0.31 UJ	3.1 J	0.6 UJ	0.68 UJ	0.61 UJ	3.8 J
Potassium	mg/kg	1,043	--	--	--	480 J	487 J	275 J	485 J	62.2 J	332 J	68.9 J	72.1 J	76.3 J	453 J
Silver	mg/kg	0.18	390	39,000	0.217	0.056 U	0.04 U	0.062 U	0.073 U	0.048 U	0.049 U	0.018 U	0.78 U	0.021 U	0.11 U
Sodium	mg/kg	--	--	--	--	39 U	33.5 U	26.5 U	52.4 UJ	20.7 UJ	29.4 UJ	33 UJ	43.2 UJ	29.5 UJ	54 UJ
Vanadium	mg/kg	44.7	78	7,800	--	13.3 J	13.7 J	20.6	31.3	1.6 J	17.3	2.7 J	3.1 J	2.7 J	26.6
Zinc	mg/kg	21.5	23,000	2,300,000	550	5 U	4.9 U	5.8 U	7.9 UJ	2.2 UJ	4.9 UJ	2.5 UJ	2.6 UJ	3 UJ	7.8 UJ

Notes:
Shading Exceeds NCSSLs (North Carolina Soil Screening Levels)
Bold Frame Exceeds Basewide Background Concentrations
Bold and Italicized Exceeds Region 9 PRGs
U- Analyte not detected
J- Reported value is estimated
J- - Reported value is biased low
UJ- Analyte not detected. Quantiation limit is imprecise
NA- Not analyzed
VOCs- Volatile Organic Compounds
SVOCs- Semi-Volatile Organic Compounds
PEST/PCBs- Pesticide/Polychlorinated Biphenyls

TABLE 6-6a
Human Health Risk Screening Step 1 - Lyman Road Groundwater
Site 95 Site Investigation
MCB Camp Lejeune, North Carolina

Station ID Sample ID Sample Date	NC2LGW (May 2005)	Background	Detection Frequency	Max Detect	SampleID of Maximum Detected Value	Minimum Detect Value	SampleID of Minimum Value	COPC
Chemical Name								
Volatile Organic Compounds (UG/L)								
Chloroform	70	--	3 - 3	12	IR95C-GW01-06A	0.56	IR95C-GW03-06A	NO
Total Metals (UG/L)								
Aluminum	--	3102.6	3 - 3	495	IR95C-GW03-06A	222	IR95C-GW01-06A	NO
Arsenic	50	12.10	1 - 3	11	IR95C-GW03-06A	11	IR95C-GW01-06A	NO
Copper	1,000	3.66	1 - 3	9.6	IR95C-GW03-06A	9.6	IR95C-GW03-06A	NO
Iron	300	16245.5	3 - 3	188	IR95C-GW03-06A	112	IR95C-GW02-06A	NO
Potassium	--	3,422.7	4 - 3	2,850	IR95C-GW03-06A	1,190	IR95C-GW02-06A	NO
Sodium	--	24,602.9	4 - 3	12,200	IR95C-GW02-06A	10,500	IR95C-GW01-06A	NO
Wet Chemistry (MG/L)								
Chloride	250	--	3 - 3	19	IR95C-GW01-06A	16	IR95C-GW03-06A	NO
Nitrate	10	--	2 - 2	1.3	IR95C-GW01-06A	0.64	IR95C-GW02-06A	NO
Sulfate	250	--	3 - 3	12	IR95C-GW02-06A	8.3	IR95C-GW01-06A	NO
Total organic carbon (TOC)	--	--	3 - 3	10	IR95C-GW01-06A	10	IR95C-GW01-06A	NO

TABLE 6-6b
Human Health Risk Screening Step 1 - Lyman Road Surface Soil
Site 95 Site Investigation
MCB Camp Lejeune, North Carolina

Station ID / Sample ID / Sample Date / Chemical Name	NCSSL (May 2005)	Region 9 PRGs - Residential Soil	10^{-4} Cancer Risk Concentration	Background	Detection Frequency	Max Detect	SampleID of Maximum Detected Value	Minimum Detect Value	SampleID of Minimum Value	COPC
Volatile Organic Compounds (UG/KG)										
Acetone	2,810	14,000,000	1,400,000,000	--	2 - 3	140	IR95C-IS100-0-1-06D-1	70	IR95C-IS102-0-1-06D-1	NO
Semi-volatile Organic Compounds (UG/KG)										
Acenaphthylene	11,400	56,000	5,600,000	--	1 - 28	130	IR95C-IS123-0-1-06D-2	130	IR95C-IS123-0-1-06D-2	NO
Anthracene	995,000	22,000,000	2,200,000,000	--	1 - 28	49	IR95C-IS123-0-1-06D-2	49	IR95C-IS123-0-1-06D-2	NO
Benzaldehyde	--	6,100,000	610,000,000	--	12 - 28	200	IR95C-IS126-0-1-06D-2	38	IR95C-IS105-0-1-06D-2	NO
Benzo(a)anthracene	343	620	62,000	--	1 - 28	230	IR95C-IS123-0-1-06D-2	230	IR95C-IS102-0-1-06D-2	NO
Benzo(a)pyrene	92.8	62	6,200	--	1 - 28	530	IR95C-IS123-0-1-06D-2	530	IR95C-IS102-0-1-06D-2	NO
Benzo(b)fluoranthene	1,180	620	62,000	--	1 - 28	680	IR95C-IS123-0-1-06D-2	680	IR95C-IS102-0-1-06D-2	NO
Benzo(g,h,i)perylene	6,720,000	2,300,000	230,000,000	--	1 - 28	140	IR95C-IS123-0-1-06D-2	140	IR95C-IS123-0-1-06D-2	NO
Benzo(k)fluoranthene	11,800	6,200	620,000	--	1 - 28	280	IR95C-IS123-0-1-06D-2	280	IR95C-IS102-0-1-06D-2	NO
Chrysene	38,150	62,000	6,200,000	--	1 - 28	420	IR95C-IS123-0-1-06D-2	420	IR95C-IS102-0-1-06D-2	NO
Di-n-butylphthalate	24,800	6,100,000	610,000,000	--	13 - 28	96	IR95C-IS105-0-1-06D-2	35	IR95C-IS115-0-1-06D-2	NO
Fluoranthene	276,000	2,300,000	230,000,000	--	1 - 28	1,500	IR95C-IS123-0-1-06D-2	1,500	IR95C-IS102-0-1-06D-2	NO
Indeno(1,2,3-cd)pyrene	3,320	620	62,000	--	1 - 28	110	IR95C-IS123-0-1-06D-2	110	IR95C-IS123-0-1-06D-2	NO
Phenanthrene	59,600	2,300,000	230,000,000	--	1 - 28	1,200	IR95C-IS123-0-1-06D-2	1,200	IR95C-IS102-0-1-06D-2	NO
Pyrene	286,000	2,300,000	230,000,000	--	1 - 28	3,300	IR95C-IS123-0-1-06D-2	3,300	IR95C-IS102-0-1-06D-2	NO
bis(2-Ethylhexyl)phthalate	6,670	35,000	3,500,000	--	11 - 28	110	IR95C-IS102-0-1-06D-2	49	IR95C-IS111-0-1-06D-2	NO
Pesticide/Polychlorinated Biphenyls (UG/KG)										
4,4'-DDD	129	2,400	240,000	--	1 - 28	2.5	IR95C-IS124-0-1-06D-2	2.5	IR95C-IS102-0-1-06D-2	NO
4,4'-DDE	--	1,700	170,000	--	5 - 28	3	IR95C-IS100-0-1-06D-2	2.1	IR95C-IS102-0-1-06D-2	NO
4,4'-DDT	1,360	1,700	170,000	--	5 - 28	4.8	IR95C-IS127-0-1-06D-2	3.2	IR95C-IS102-0-1-06D-2	NO
Aldrin	--	29	2,900	--	1 - 28	2.7	IR95C-IS121-0-1-06D-2	2.7	IR95C-IS102-0-1-06D-2	NO
Endosulfan sulfate	--	370,000	37,000,000	--	7 - 28	33	IR95C-IS120-0-1-06D-2	1.9	IR95C-IS102-0-1-06D-2	NO
Endrin aldehyde	--	18,000	1,800,000	--	3 - 28	4.8	IR95C-IS127-0-1-06D-2	2.8	IR95C-IS102-0-1-06D-2	NO
Endrin ketone	--	18,000	1,800,000	--	9 - 28	13	IR95C-IS120-0-1-06D-2	2.3	IR95C-IS102-0-1-06D-2	NO
Heptachlor epoxide	6.34	53	5,300	--	1 - 28	1.5	IR95C-IS108-0-1-06D-2	1.5	IR95C-IS102-0-1-06D-2	NO
alpha-Chlordane	--	1,600	160,000	--	2 - 28	460	IR95C-IS121-0-1-06D-2	1.4	IR95C-IS102-0-1-06D-2	NO
gamma-Chlordane	--	1,600	160,000	--	2 - 28	390	IR95C-IS121-0-1-06D-2	0.94	IR95C-IS102-0-1-06D-2	NO
Total Metals (MG/KG)										
Aluminum	--	76,000	7,600,000	8,965	28 - 28	12,400	IR95C-IS121-0-1-06D-2	270	IR95C-IS107-0-1-06D-2	NO
Arsenic	5.24	0.39	39	0.879	5 - 28	15.4	IR95C-IS102-0-1-06D-2	1.6	IR95C-IS114-0-1-06D-2	NO
Barium	848	5,400	540,000	19.4	27 - 28	40.9	IR95C-IS121-0-1-06D-2	1.9	IR95C-IS112-0-1-06D-2	NO
Beryllium	3.38	150	15,000	0.252	28 - 28	0.16	IR95C-IS122-0-1-06D-2	0.014	IR95C-IS106-0-1-06D-2	NO
Calcium	--	--	--	33,240	28 - 28	60,800	IR95C-IS122-0-1-06D-2	52.5	IR95C-IS112-0-1-06D-2	NO
Chromium	27.2	30	3,000	8.93	23 - 28	11.7	IR95C-IS121-0-1-06D-2	1	IR95C-IS109-0-1-06D-2	NO
Cobalt	--	900	90,000	0.412	12 - 28	1	IR95C-IS122-0-1-06D-2	0.18	IR95C-IS120-0-1-06D-2	NO
Copper	704	3,100	310,000	11.2	1 - 28	10	IR95C-IS110-0-1-06D-2	10	IR95C-IS100-0-1-06D-2	NO
Iron	151	23,000	2,300,000	6,097	28 - 28	6,750	IR95C-IS121-0-1-06D-2	233	IR95C-IS107-0-1-06D-2	NO
Lead	270	400	40,000	25.8	28 - 28	19.6	IR95C-IS121-0-1-06D-2	1.4	IR95C-IS109-0-1-06D-2	NO
Magnesium	--	--	--	804	28 - 28	1,340	IR95C-IS122-0-1-06D-2	18.8	IR95C-IS112-0-1-06D-2	NO
Manganese	65.2	1,800	180,000	43.8	28 - 28	150	IR95C-IS122-0-1-06D-2	4.4	IR95C-IS106-0-1-06D-2	NO
Mercury	0.015	23	2,300	0.120	15 - 28	0.16	IR95C-IS126-0-1-06D-2	0.01	IR95C-IS104-0-1-06D-2	NO
Nickel	56.4	1,600	160,000	1.65	16 - 28	3.1	IR95C-IS121-0-1-06D-2	0.82	IR95C-IS102-0-1-06D-2	NO
Potassium	--	--	--	384	21 - 28	822	IR95C-IS122-0-1-06D-2	64.7	IR95C-IS105-0-1-06D-2	NO
Sodium	--	--	--	--	2 - 28	161	IR95C-IS122-0-1-06D-2	79.4	IR95C-IS124-0-1-06D-2	NO
Vanadium	--	78	7,800	28.5	28 - 28	19.2	IR95C-IS121-0-1-06D-2	0.98	IR95C-IS107-0-1-06D-2	NO
Zinc	550	23,000	2,300,000	31.2	11 - 28	44.8	IR95C-IS122-0-1-06D-2	11.6	IR95C-IS114-0-1-06D-2	NO

TABLE 6-6c
Human Health Risk Screening Step 1 - Lyman Road Subsurface Soil
Site 95 Site Investigation
MCB Camp Lejeune, North Carolina

Station ID Sample ID Sample Date Chemical Name	NCSSL (May 2005)	Region 9 PRGs - Residential Soil	10^{-4} Cancer Risk Concentration	Background	Detection Frequency	Max Detect	SampleID of Maximum Detected Value	Minimum Detect Value	SampleID of Minimum Value	COPC
Semi-volatile Organic Compounds (UG/KG)										
Di-n-butylphthalate	24,800	6,100,000	610,000,000	--	1 - 14	56	IR95C-IS115-3-4-06D-2	56	IR95C-IS115-3-4-06D-2	NO
bis(2-Ethylhexyl)phthalate	6,670	35,000	3,500,000	--	13 - 14	100	IR95C-IS121-3-4-06D-2	39	IR95C-IS107-3-4-06D-2	NO
Pesticide/Polychlorinated Biphenyls (UG/KG)										
4,4'-DDT	1,360	1,700	170,000	--	1 - 14	5.1	IR95C-IS123-3-4-06D-2	5.1	IR95C-IS103-3-4-06D-2	NO
Endrin aldehyde	--	18,000	1,800,000	--	1 - 14	2.3	IR95C-IS123-3-4-06D-2	2.3	IR95C-IS103-3-4-06D-2	NO
Methoxychlor	56,100	310,000	31,000,000	--	1 - 14	47	IR95C-IS123-3-4-06D-2	47	IR95C-IS103-3-4-06D-2	NO
Total Metals (MG/KG)										
Aluminum	--	76,000	7,600,000	13,061	14 - 14	21,600	IR95C-IS127-3-4-06D-2	846	IR95C-IS119-3-4-06D-2	NO
Arsenic	5.24	0.39	39	5.29	6 - 14	2.2	IR95C-IS117-3-4-06D-2	1.2	IR95C-IS119-3-4-06D-2	NO
Barium	848	5,400	540,000	37.34	14 - 14	24.7	IR95C-IS123-3-4-06D-2	2.4	IR95C-IS119-3-4-06D-2	NO
Beryllium	3.38	150	15,000	0.432	14 - 14	0.15	IR95C-IS109-3-4-06D-2	0.02	IR95C-IS119-3-4-06D-2	NO
Calcium	--	--	--	944	2 - 14	161	IR95C-IS123-3-4-06D-2	142	IR95C-IS127-3-4-06D-2	NO
Chromium	27.2	30	3,000	30.9	14 - 14	20	IR95C-IS117-3-4-06D-2	1.8	IR95C-IS119-3-4-06D-2	NO
Cobalt	--	900	90,000	2.33	12 - 14	1.1	IR95C-IS117-3-4-06D-2	0.13	IR95C-IS119-3-4-06D-2	NO
Iron	151	23,000	2,300,000	16,984	14 - 14	11,600	IR95C-IS117-3-4-06D-2	408	IR95C-IS119-3-4-06D-2	NO
Lead	270	400	40,000	12.6	14 - 14	7.9	IR95C-IS127-3-4-06D-2	2.4	IR95C-IS119-3-4-06D-2	NO
Magnesium	--	--	--	1,022	14 - 14	551	IR95C-IS127-3-4-06D-2	33.2	IR95C-IS119-3-4-06D-2	NO
Manganese	65.2	1,800	180,000	23.6	14 - 14	8.8	IR95C-IS117-3-4-06D-2	3.2	IR95C-IS119-3-4-06D-2	NO
Mercury	0.015	23	2,300	0.096	2 - 14	0.039	IR95C-IS113-3-4-06D-2	0.012	IR95C-IS117-3-4-06D-2	NO
Nickel	56.4	1,600	160,000	4.73	11 - 14	3.9	IR95C-IS117-3-4-06D-2	0.91	IR95C-IS107-3-4-06D-2	NO
Potassium	--	--	--	1,043	14 - 14	790	IR95C-IS109-3-4-06D-2	62.2	IR95C-IS119-3-4-06D-2	NO
Vanadium	--	78	7800	44.7	14 - 14	31.3	IR95C-IS117-3-4-06D-2	1.6	IR95C-IS119-3-4-06D-2	NO

Figures

\\aphrodite\projects\USNavFaceNGCom\315007CampLejeune\Projects\Site95\Figure6-1_Lyman Road Site and Borings.mxd

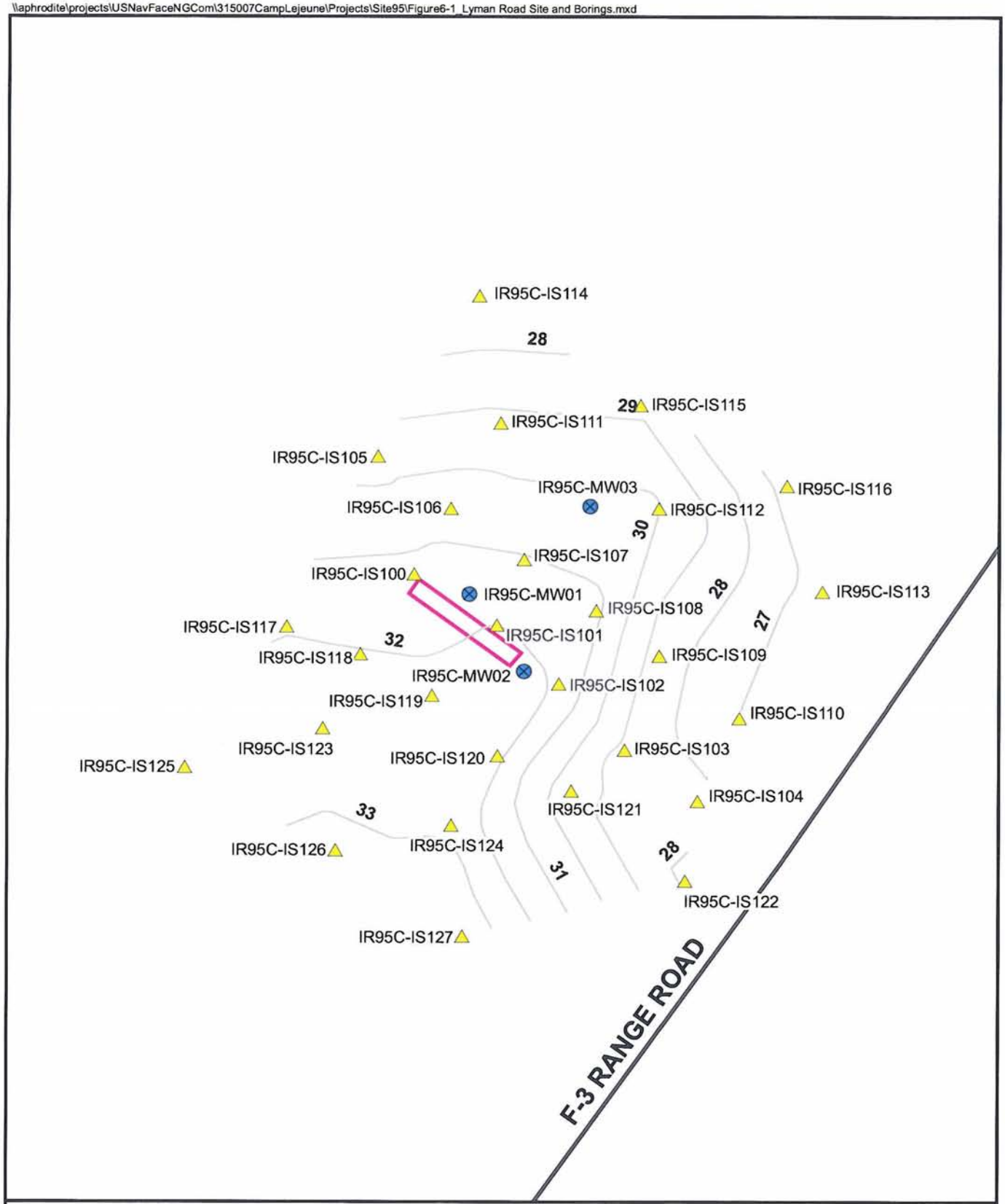

Legend

- Boring Locations
- Monitoring Wells
- Livestock Dipping Vat
- Road
- Surface Contours
- 21 Ground Surface Elevation (ft msl)

N
W E
S

0 15 30
Feet

Figure 6-1
Site 95 - Lyman Road Boring Locations
Site 95 - Site Investigation
MCB Camp Lejeune, North Carolina

CH2MHILL

\\aphrodite\projects\USNavFaceNGCom\315007CampLejeune\Projects\Site95\Figure2-10_Lyman Road Groundwater Contour Map.mxd

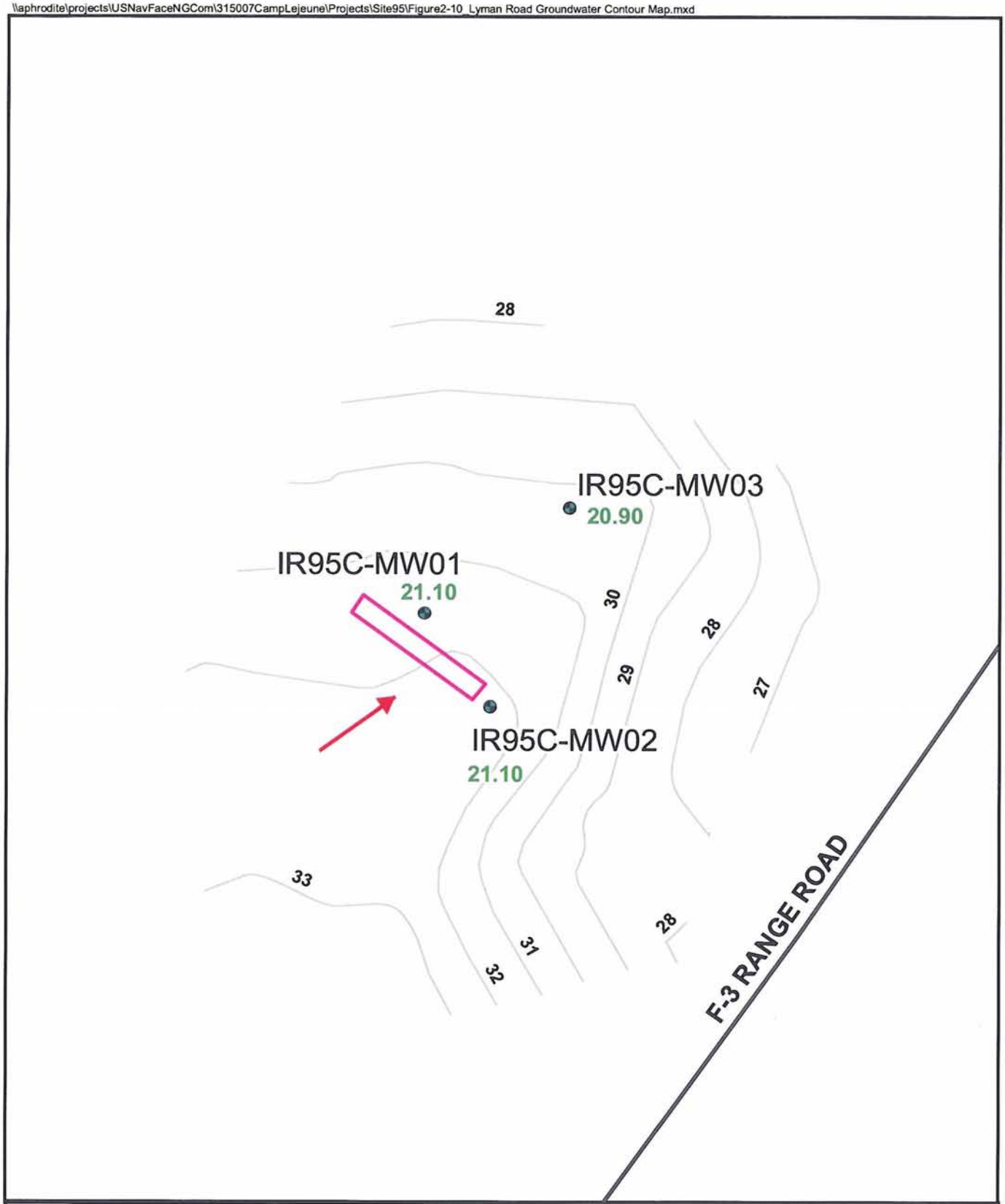

Legend

- Monitoring Wells
- Livestock Dipping Vat
- Road
- Surface Contours
- 21.10 Water level elevations (ft msl)
- Direction of Groundwater Flow

N
W E
S

0 12.5 25
Feet

Figure 6-2
Site 95 - Lyman Road Groundwater Elevation Map
Site 95 - Site Investigation
MCB Camp Lejeune, North Carolina

CH2MHILL

\\aphrodite\projects\USNavFaceNGCom\315007CampLejeune\Projects\Site95\Figure6-3_Lyman Road Soil Analytical Results.mxd

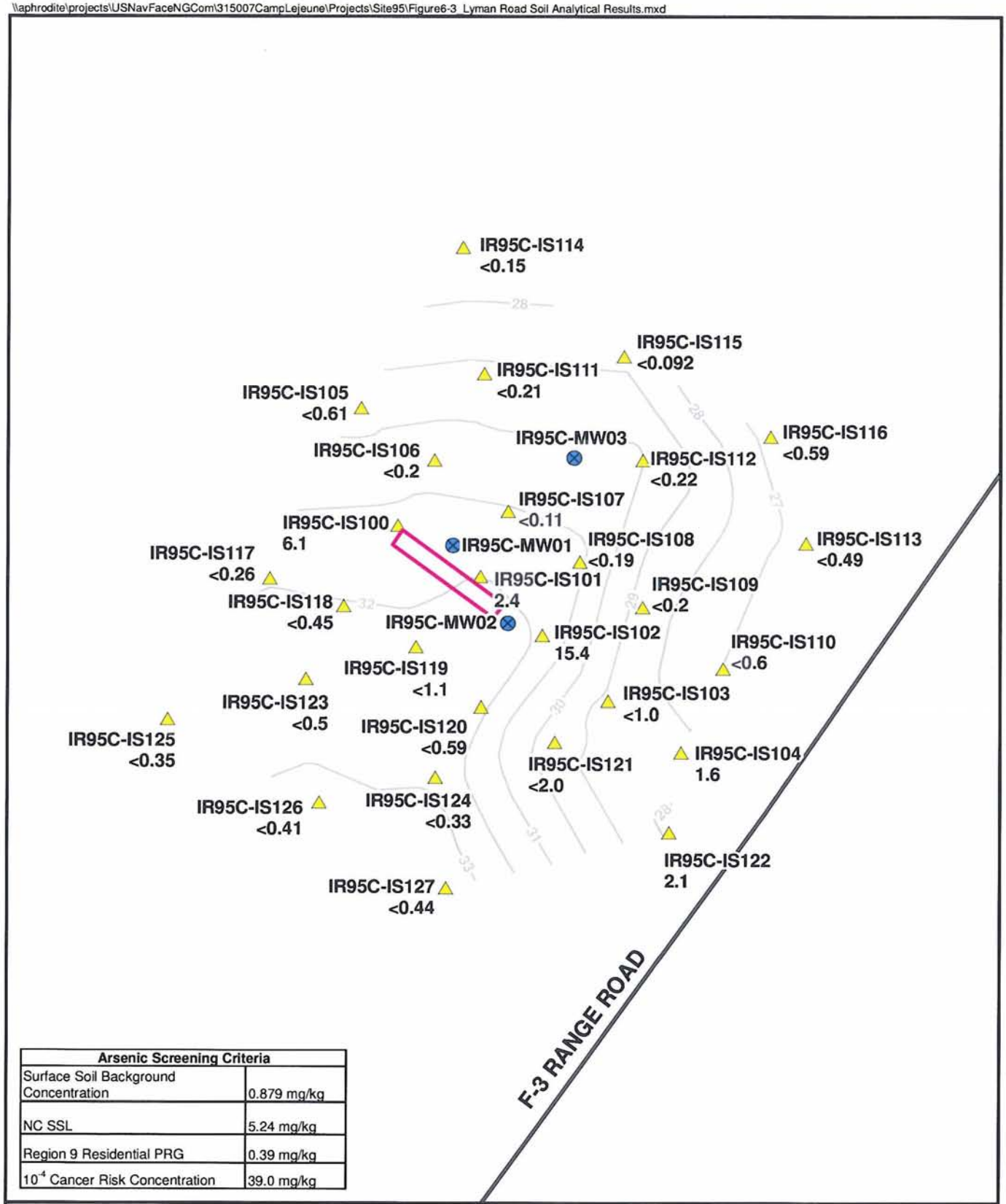

Arsenic Screening Criteria	
Surface Soil Background Concentration	0.879 mg/kg
NC SSL	5.24 mg/kg
Region 9 Residential PRG	0.39 mg/kg
10^{-4} Cancer Risk Concentration	39.0 mg/kg

Legend
- Monitoring Wells
- Soil Boring Locations
- Livestock Dipping Vat
- Surface Contours
- Road

All concentration are reported in mg/kg.
J - Estimated Value
< - Arsenic was not detected above the corresponding detection limit.

0 15 30 Feet

N W E S

Figure 6-3
Site 95 - Lyman Road Surface Soil Arsenic Results
Site 95 - Site Investigation
MCB Camp Lejeune, North Carolina

CH2MHILL

SECTION 7

Recommendations

7.1 Jaybird Road

No unacceptable risks were identified at Site 95-Jaybird Road; therefore, no further action is recommended.

7.2 Magnolia Road

Arsenic concentrations in surface and subsurface soil at Site 95-Magnolia Road present an unacceptable risk to human health. Thus, a removal action is recommended. It is recommended that the concrete structure and soils exceeding the acceptable cancer risk be excavated and disposed off-site at a permitted facility. Based on the soil analytical results collected during the SI, the aerial extent of soils exceeding the acceptable cancer risk is 2,500 square feet. Assuming excavation of soil to a depth of four feet below ground surface, the estimated volume of soil to be excavated and disposed is 10,000 cubic feet, or 370 cubic yards.

7.3 Lyman Road

No unacceptable risks were identified at Site 95-Lyman Road; therefore, no further action is recommended.

SECTION 8

References

Baker Environmental, Inc. 2001. *Final Base Background Study*. Final. April 2001.

Baker Environmental, Inc. 2002. *Base Background Groundwater Study*. Draft. August 2002.

Baker Environmental, Inc. 2004. *Suspected Dipping Vat Sampling and Suspected Asbestos Shingle/Transit Board Sampling*. Final. June 2004.

Cardinell, A.P, Berg, S.A., and Lloyd, O.B. Jr. 1993. *Hydrogeologic Framework of U.S. Marine Corps Base at Camp Lejeune, North Carolina.* U.S. Geological Survey: Water Resources Investigations Report 93-4049.

CH2M HILL, 2006. *Site Investigation Work Plan, Site 95 – Operable Unit No. 22, Historic Livestock Dipping Vats, Marine Corps Base Camp Lejeune, North Carolina*. Draft. February 2006.

Clark, Michael R., 1997. *Dipping Vat Removal – Limiting Liability*. 46th Annual Florida Beef Cattle Short Course Proceedings; University of Florida (Gainesville): Animal Science Department. May 1997.

Harned, D. 1989. *Assessment of Hydrologic and Hydrogeologic Data at Camp Lejeune Marine Corps Base, North Carolina*. U.S. Geological Survey Water-Resources Investigation Report 89-4096, 64p. 1989.

Heath, R. 1989. *Basic Groundwater Hydrology*. U.S. Geological Survey WSP 2220. 1989.

Hope, H., 2005. *Dip That Tick: Texas Tick Fever Eradication in Arkansas, 1907-1943.* Arkansas Historic Preservation Program. Little Rock, Arkansas. 2005.

North Carolina Administrative Code. 2005. Title 15A, Department of Environment and Natural Resources, Division of Water Quality. *Subchapter 2L, Classifications and Water Quality Standards Applicable to the Groundwaters of North Carolina*. December.

North Carolina Department of Environment and Natural Resources, Division of Waste Management, Hazardous Waste Sites. 2005. *Guidelines for Establishing Remediation Goals at RCRA Hazardous Waste Sites*. May 2005.

Thomas, E.J., and R.D. Rhue, 1997. *Volatilization of Arsenic in Contaminated Cattle Dipping*. Bulletin of Environmental Contamination and Toxicology. 59:882-887. 1997.

Thomas, E.J., R.D. Rhue, and A.G. Hornsby, 1999. *Arsenic Contamination From Cattle-Dipping Vats*. Soil and Water Science Department, Florida Cooperative Extension Service, Institute of Food and Agricultural Sciences, University of Florida. 1999. http://edis.ifas.ufl.edu

United States Department of Agriculture (USDA), 2002. *National Cooperative Soil Survey: Onslow Series*. December 2002.

USEPA, 1999. *National Functional Guidelines for Organic Data Review*. 1999.

USEPA, 2004. *National Functional Guidelines for Inorganic Data Review*. 2004.

USEPA, December 2006. *Region 9 Superfund Preliminary Remediation Goals*. http://www.epa.gov/region9/waste/sfund/prg/index.html. December 7, 2006.

Winner, M. and Coble R., 1989. *Hydrogeologic Framework of the North Carolina Coastal Plain Aquifer System*. U.S. Geological Survey Open File Report 87-690.

Appendix A

Suspected Dipping Vat Sampling and Suspected Asbestos Shingle/Transit Board Sampling Report

Baker

Baker Environmental, Inc.
A Unit of Michael Baker Corporation

Airside Business Park
100 Airside Drive
Moon Township, PA 15108

Office: 412-269-6000
Fax: 412-375-3996

June 18, 2004

Commanding General
ACS-EMD Building 58
PSC 20004
Marine Corps Base
Camp Lejeune, NC 28542-0004

Attn: Mr. Rick Raines

Re: Contract N62470-02-D-3052
Navy CLEAN, District III
Contract Task Order (CTO) 0041
Suspected Dipping Vat Sampling and Suspected Asbestos Shingle/Transite Board Sampling
Marine Corps Base (MCB) Camp Lejeune, North Carolina

Dear Mr. Raines:

During an on-site meeting conducted February 19, 2004, it was brought to Baker's attention that two suspected animal dipping vats and several piles of suspected asbestos shingles/transite board were identified at MCB Camp Lejeune. The Base requested that some preliminary sampling be conducted in conjunction with the RCRA Facility Investigation (RFI) fieldwork in March and April 2004 to determine if: (1) the suspected animal dipping vats were actually historic dipping vats that may have impacted soils and (2) the piles of shingles/transite board contain asbestos. Based on limited information and the sizes of the dipping vats, the two suspected vats were labeled as a Cow Dipping Vat (located in the Verona Loop area near Magnolia Road) and a Goat Dipping Vat (located to the north of Marine Boulevard). The following paragraphs describe the sampling procedures and findings associated with each of these three sites.

Cow Dipping Vat

On April 1, 2004, Mr. Scott Williams of EMD escorted Baker to the suspected Cow Dipping Vat. After locating the site, a path was cleared and flagged for access. It was observed that one wall of the dipping vat had collapsed into the actual vat area. The dipping vat was approximately 25-foot by 4-foot long and 4-foot deep. Photographs of the dipping vat are included in Attachment A.

Sample locations were selected inside the dipping vat area where soils near the bottom of the vat were accessible. Two soil samples (CDV-01 and CDV-02 as shown on Figure 1) were collected from soils that had accumulated inside the vat. The samples were collected from a depth of 0 to 1-foot using hand augering equipment (bucket auger) and techniques. Soils within the vat consisted of silty sand with some organic debris. The vat bottom was encountered approximately 1 to 1.5-foot below the accumulated soil and appeared to consist of concrete similar to that used for the walls. The samples were stored on ice in a cooler at approximately 4°C, shipped to Katahdin Laboratories, and analyzed for pesticides and RCRA metals.

Table 1 provides a comparison summary of detected constituents to regulatory screening criteria. A complete set of analytical results is provided in Attachment B. The results were compared to USEPA Region IX Preliminary Remediation Goals (PRGs) for residential soil, North Carolina Soil to Groundwater Screening Levels (SSLs), and Base Background criteria. 4,4'-DDD; 4,4'-DDE; and 4,4'-DDT were detected at concentrations exceeding the PRGs and SSLs in soil sample CDV-01. Arsenic was detected in both soil samples at concentrations of 457 mg/kg (CDV-02) and 565 mg/kg (CDV-01). These concentrations exceeded the PRGs, SSLs, and Base Background criteria. Mercury was also detected in both soil samples at concentrations exceeding the SSLs and Base Background criteria. See Figure 1 for analytical exceedances and corresponding sample locations.

Goat Dipping Vat

On April 6, 2004, Baker located the suspected Goat Dipping Vat. The suspected vat was approximately 12-foot x 3-foot in size with brick side walls. Photographs of the dipping vat are included in Attachment A.

Two soil samples (GDV-01 and GDV-02 as shown on Figure 2) were collected from soils that had accumulated inside the vat. The samples were collected from a depth of 0 to 1-foot using hand augering equipment (bucket auger) and techniques. Soils within the vat mainly consisted of fine sand with trace silt, organic material, and metal debris. A hard bottom was encountered approximately 1-foot below the accumulated soil during augering at GDV-01. The bottom appeared to consist of brick. No bottom was encountered at GDV-02 and augering was ended at 2-foot. The samples were stored on ice in a cooler at approximately 4°C, shipped to Katahdin Laboratories, and analyzed for pesticides and RCRA metals.

Table 1 provides a comparison summary of detected compounds to regulatory screening criteria. A complete set of analytical results is provided in Attachment B. The results were compared to USEPA Region IX PRGs for residential soil, North Carolina SSLs, and Base Background criteria. No pesticides were detected in the soil samples. Arsenic and chromium were detected in both soil samples at concentrations exceeding the PRGs, SSLs, and Base Background criteria. Mercury was also detected in soil sample GDV-01 at a concentration exceeding SSLs and Base Background criteria. See Figure 2 for analytical exceedances and corresponding sample locations.

Piles of Suspected Asbestos Shingles/Transite Board

Two composite samples were collected from the piles of suspected asbestos shingles/transite board on April 6, 2004 and sent to EMSL Analytical, Inc. for asbestos analysis via USEPA 600/R-93/116 Method. One sample was collected from the gray transite board and one sample was collected from the black asphalt shingles. The laboratory found 30% Chrysotile in the gray transite board and no asbestos in the black asphalt shingles. The laboratory results are included as Attachment C.

Summary

Soils within the two suspected dipping vats contain elevated concentrations of pesticides (4,4'-DDD, 4,4'-DDE and 4,4'-DDT), arsenic, chromium, and/or mercury. These constituents and detected concentrations suggest that the two structures were historically used as animal dipping vats and soils in the vicinity of the vats may be impacted.

Based on review of the analytical results from the piles of suspected asbestos shingles/transite board, the gray transite board contains asbestos.

Baker appreciates the opportunity to provide continued services to MCB Camp Lejeune, and looks forward to continuing project activities at Camp Lejeune. If you have any questions regarding this letter report and analytical results, please do not hesitate to contact me at (412) 269-2098 or Mr. Scott Moffett at (412) 269-6136.

Sincerely,

BAKER ENVIRONMENTAL, INC.

James S. Culp, P.G.
Project Manager

JSC/lp
Attachments

cc: Mr. Steve Martin (LANTDIV)
Mr. Daniel Hood (LANTDIV)
Mr. Scott Williams (MCB, Camp Lejeune)
Mrs. Louise Palmer (CH2M Hill)
Mr. Matt Louth (CH2M Hill)

bcc: CF; JMentz/PRGM F, Jculp, RSok, SMoffett,
RBonelli/PJT F; Daily File
S.O.# 102200 RF.DR

Initials_____

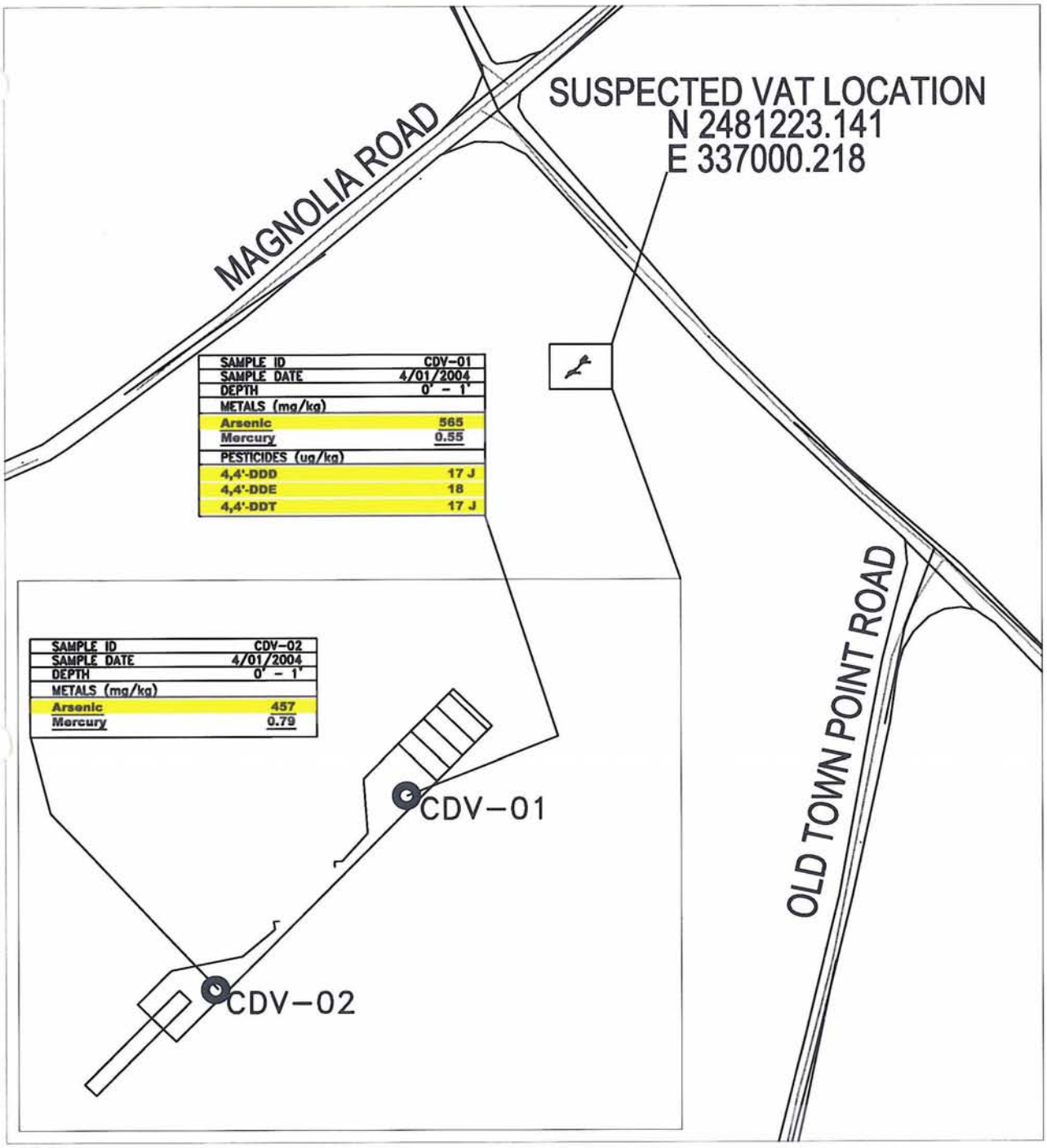

SAMPLE ID	CDV-01
SAMPLE DATE	4/01/2004
DEPTH	0' - 1'
METALS (mg/kg)	
Arsenic	565
Mercury	0.55
PESTICIDES (ug/kg)	
4,4'-DDD	17 J
4,4'-DDE	18
4,4'-DDT	17 J

SAMPLE ID	CDV-02
SAMPLE DATE	4/01/2004
DEPTH	0' - 1'
METALS (mg/kg)	
Arsenic	457
Mercury	0.79

NOTES:

DRAWING IS NOT TO SCALE
SUSPECTED DIPPING VAT IS APPROXIMATED AND CREATED FROM SKETCH MAP
SAMPLE LOCATIONS ARE APPROXIMATE

Baker
Michael Baker Jr., Inc.

LEGEND

CDV-01 – SURFACE SOIL SAMPLE LOCATION
SHADED – EXCEEDS USEPA REGION IX PRGs
BOLD – EXCEEDS NCDENR SSLs
UNDERLINE – EXCEEDS BASE BACKGROUND

FIGURE 1
SUSPECTED COW DIPPING VAT
SURFACE SOIL SAMPLING
CONSTITUENTS EXCEEDING CRITERIA
IN SOIL
MARINE CORPS BASE, CAMP LEJEUNE
NORTH CAROLINA

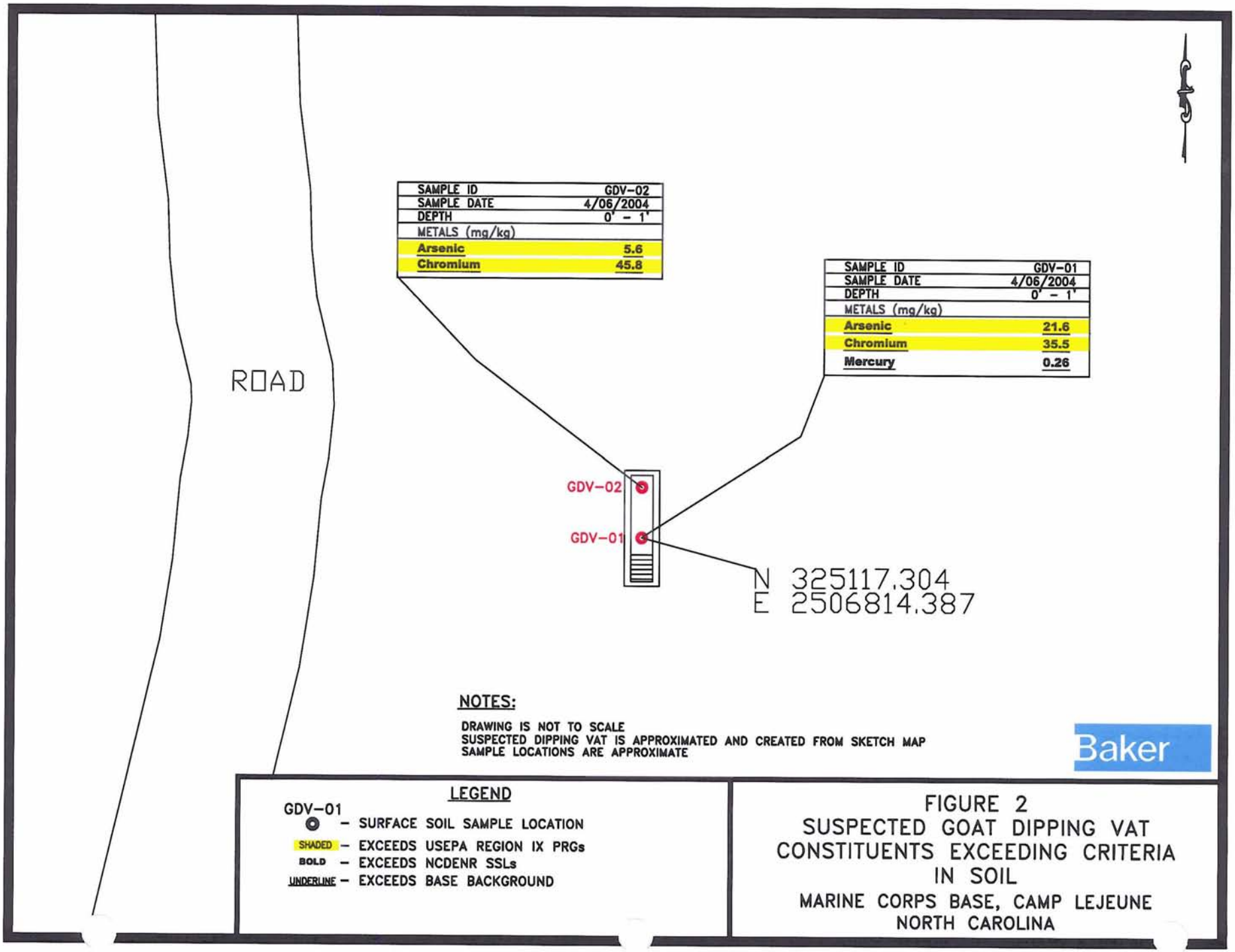

SAMPLE ID	GDV-02
SAMPLE DATE	4/06/2004
DEPTH	0' – 1'
METALS (mg/kg)	
Arsenic	**5.6**
Chromium	**45.8**

SAMPLE ID	GDV-01
SAMPLE DATE	4/06/2004
DEPTH	0' – 1'
METALS (mg/kg)	
Arsenic	**21.6**
Chromium	**35.5**
Mercury	**0.26**

FIGURE 2
SUSPECTED GOAT DIPPING VAT
CONSTITUENTS EXCEEDING CRITERIA
IN SOIL
MARINE CORPS BASE, CAMP LEJEUNE
NORTH CAROLINA

TABLE 1

SURFACE SOIL COMPARISON SUMMARY
SUSPECTED DIPPING VAT SAMPLING
CTO - 0041
MCB, CAMP LEJEUNE, NORTH CAROLINA

SAMPLE ID	Region IX PRGs	NCDENR	Base Background	CDV01	CDV02	GDV-01	GDV-02	GDV-02D
SAMPLE DATE	Residential	Soil to GW	SS - Fine Sand	04-01-2004	04-01-2004	04-06-2004	04-06-2004	04-06-2004
PESTICIDES (ug/kg)								
4,4'-DDD	2.4	0.129	NA	17 J	25 U	4.4 U	4.5 U	4.5 U
4,4'-DDE	1.7		NA	18	25 U	4.4 U	4.5 U	4.5 U
4,4'-DDT	1.7	1.36	NA	17 J	25 U	4.4 U	4.5 U	4.5 U
METALS (mg/kg)								
ARSENIC	2.2	5.24	0.671	565	457	21.6	5.6	5.6
BARIUM	5400	848	16.8	50 B	51.8 B	305	676	803
CADMIUM	37	2.72	0.0549	1.3 B	1.7 B	0.49 U	1.3	0.76 B
CHROMIUM*	30	27.2	15.2	3.5 B	3.4 B	35.5	45.8	48.2
LEAD	400	270	20.9	142	155	75.6	99.2	119
MERCURY	23	0.0154	0.1	**0.55**	**0.79**	**0.26**	0.03 B	0.02 B
SILVER	390	0.223	ND	0.65 U	0.89 U	0.23 U	0.28 U	0.28 B
TOTAL SOLIDS				19	13	75	73	73

NOTES:
* Hexavalent chromium value (conservative) used for comparison to Region IX PRGs
J = Result is estimated
U = Not detected

TABLE 2

SURFACE SOIL ANALYTICAL SUMMARY
SUSPECTED DIPPING VAT SAMPLING
CTO - 0041
MCB, CAMP LEJEUNE, NORTH CAROLINA

SAMPLE ID	CDV01	CDV02	GDV-01	GDV-02	GDV-02D
SAMPLE DATE	04-01-2004	04-01-2004	04-06-2004	04-06-2004	04-06-2004
PESTICIDES (ug/kg)					
4,4'-DDD	17 J	25 U	4.4 U	4.5 U	4.5 U
4,4'-DDE	18	25 U	4.4 U	4.5 U	4.5 U
4,4'-DDT	17 J	25 U	4.4 U	4.5 U	4.5 U
ALDRIN	8.9 U	13 U	2.3 U	2.3 U	2.3 U
ALPHA BHC	8.9 U	13 U	2.3 U	2.3 U	2.3 U
ALPHA-CHLORDANE	8.9 U	13 U	2.3 U	2.3 U	2.3 U
BETA BHC	8.9 U	13 U	2.3 U	2.3 U	2.3 U
DELTA BHC	8.9 U	13 U	2.3 U	2.3 U	2.3 U
DIELDRIN	17 U	25 U	4.4 U	4.5 U	4.5 U
ENDOSULFAN I	8.9 U	13 U	2.3 U	2.3 U	2.3 U
ENDOSULFAN II	17 U	25 U	4.4 U	4.5 U	4.5 U
ENDOSULFAN SULFATE	17 U	25 U	4.4 U	4.5 U	4.5 U
ENDRIN	17 U	25 U	4.4 U	4.5 U	4.5 U
ENDRIN ALDEHYDE	17 U	25 U	4.4 U	4.5 U	4.5 U
ENDRIN KETONE	17 U	25 U	4.4 U	4.5 U	4.5 U
GAMMA BHC	8.9 U	13 U	2.3 U	2.3 U	2.3 U
GAMMA-CHLORDANE	8.9 U	13 U	2.3 U	2.3 U	2.3 U
HEPTACHLOR	8.9 U	13 U	2.3 U	2.3 U	2.3 U
HEPTACHLOR EPOXIDE	8.9 U	13 U	2.3 U	2.3 U	2.3 U
METHOXYCHLOR	89 U	130 U	23 U	23 U	23 U
TOXAPHENE	890 U	1300 U	230 U	230 U	230 U
METALS (mg/kg)					
ARSENIC	565	457	21.6	5.6	5.6
BARIUM	50 B	51.8 B	305	676	803
CADMIUM	1.3 B	1.7 B	0.49 U	1.3	0.76 B
CHROMIUM	3.5 B	3.4 B	35.5	45.8	48.2
LEAD	142	155	75.6	99.2	119
MERCURY	0.55	0.79	0.26	0.03 B	0.02 B
SELENIUM	3.47 U	4.72 U	4.51 U	0.57 U	0.38 U
SILVER	0.65 U	0.89 U	0.23 U	0.28 U	0.28 B
TOTAL SOLIDS	19	13	75	73	73

EMSL Analytical, Inc.
107 Haddon Ave., Westmont, NJ 08108
Phone: (856) 858-4800 Fax: (856) 858-4960 Email: ssiegel@EMSL.com

Attn:	Baker Environmental 100 Airside Drive Moon Township, PA 15108	Customer ID:	BAKE51
		Customer PO:	
		Received:	04/23/04 11:21 AM
Fax:	(412) 375-3996 Phone: (412) 269-6300	EMSL Order:	040407215
Project:	**#102200 Task Da Da**	EMSL Proj:	
		Analysis Date:	4/29/2004

Asbestos Analysis of Bulk Materials via EPA 600/R-93/116 Method using Polarized Light Microscopy

				Non-Asbestos			Asbestos
Sample	**Location**	**Appearance**	**Treatment**	**%**	**Fibrous**	**% Non-Fibrous**	**% Type**
0404-MCB-001 *040407215-0001*	Appendix A	Gray Fibrous Heterogeneous	Teased			70% Non-fibrous (other)	**30% Chrysotile**
0404-MCB-002 *040407215-0002*	Appendix A	Black Fibrous Heterogeneous	Dissolved	50%	Glass	50% Non-fibrous (other)	**None Detected**

Analyst(s)

Erica Valent (2)

Stephen Siegel, CIH
or other approved signatory

Due to magnification limitations inherent in PLM, asbestos fibers in dimensions below the resolution capability of PLM may not be detected. Samples reported as <1% or none detected may require additional testing by TEM to confirm asbestos quantities. The above test report relates only to the items tested and may not be reproduced in any form without the express written approval of EMSL Analytical, Inc. EMSL's liability is limited to the cost of analysis. EMSL bears no responsibility for sample collection activities or analytical method limitations. Interpretation and use of test results are the responsibility of the client. The test results contained within this report meet the requirements of NELAC unless otherwise noted.
Analysis performed by EMSL Westmont (NVLAP #101048-0), NY ELAP 10872

THIS IS THE LAST PAGE OF THE REPORT.

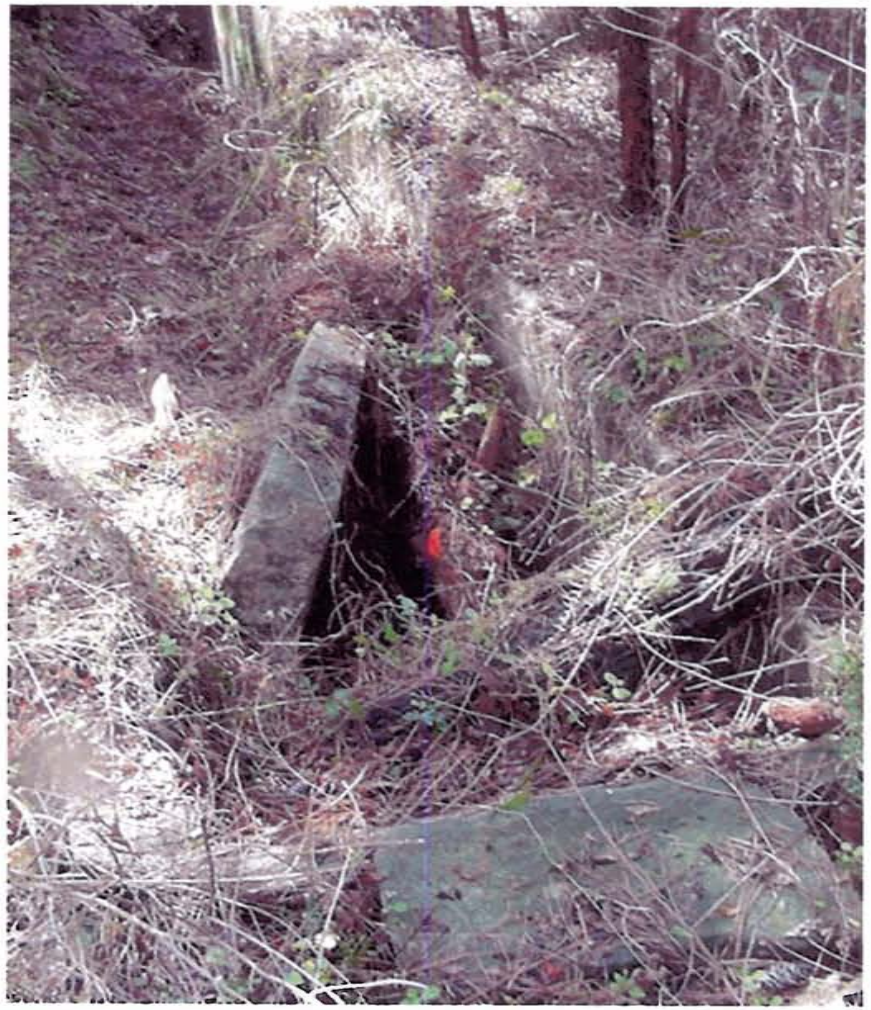

Cow Dipping Vat – Looking northeast

Cow Dipping Vat – Looking northeast

Goat Dipping Vat – Looking west

Goat Dipping Vat – Looking north

Transite Board Pile #1

Transite Board Pile #2

Appendix B

Analytical Results

B-1 Jaybird Road
B-2 Magnolia Road
B-3 Lyman Road

CTO-105
Site 95 Jaybird Road Groundwater Raw Analytical Data
MCB Camp Lejeune
July 2006

Station ID	IR95A-MW01		IR95A-MW02	IR95A-MW03
Sample ID	IR95A-GW01-06C	IR95A-GW01D-06C	IR95A-GW02-06C	IR95A-GW03-06C
Sample Date	07/31/06	07/31/06	08/01/06	07/31/06
Chemical Name				
VOCs (UG/L)				
1,1,1-Trichloroethane	0.5 U	0.5 U	0.5 U	0.5 UJ
1,1,2,2-Tetrachloroethane	0.5 U	0.5 U	0.5 U	0.5 UJ
1,1,2-Trichloro-1,2,2-trifluoroethane(Freon-113)	0.5 U	0.5 U	0.5 U	0.5 UJ
1,1,2-Trichloroethane	0.5 UJ	0.5 UJ	0.5 UJ	0.5 UJ
1,1-Dichloroethane	0.5 U	0.5 U	0.5 U	0.5 UJ
1,1-Dichloroethene	0.5 U	0.5 U	0.5 U	0.5 UJ
1,2,3-Trichlorobenzene	0.5 U	0.5 U	0.5 U	0.5 UJ
1,2,4-Trichlorobenzene	0.5 U	0.5 U	0.5 U	0.5 UJ
1,2-Dibromo-3-chloropropane	0.5 U	0.5 U	0.5 U	0.5 UJ
1,2-Dibromoethane	0.5 U	0.5 U	0.5 U	0.5 UJ
1,2-Dichlorobenzene	0.5 U	0.5 U	0.5 U	0.5 UJ
1,2-Dichloroethane	0.5 U	0.5 U	0.5 U	0.5 UJ
1,2-Dichloropropane	0.5 UJ	0.5 U	0.5 UJ	0.5 UJ
1,3-Dichlorobenzene	0.5 U	0.5 U	0.5 U	0.5 UJ
1,4-Dichlorobenzene	0.5 U	0.5 U	0.5 U	0.5 UJ
2-Butanone	5 U	5 U	5 U	5 UJ
2-Hexanone	5 U	5 U	5 U	5 UJ
4-Methyl-2-pentanone	5 U	5 U	5 U	5 UJ
Acetone	5 UJ	5 UJ	5 UJ	5 UJ
Benzene	0.5 U	0.5 U	0.5 U	0.5 UJ
Bromochloromethane	0.5 U	0.5 U	0.5 U	0.5 UJ
Bromodichloromethane	0.5 UJ	0.5 U	0.5 UJ	0.5 UJ
Bromoform	0.5 U	0.5 U	0.5 U	0.91 J
Bromomethane	0.5 U	0.5 U	0.5 U	0.5 UJ
Carbon disulfide	0.5 U	0.5 U	0.5 U	0.5 UJ
Carbon tetrachloride	0.5 U	0.5 U	0.5 U	0.5 UJ
Chlorobenzene	0.5 U	0.5 U	0.5 U	0.5 UJ
Chloroethane	0.5 U	0.5 U	0.5 U	0.5 UJ
Chloroform	0.5 U	0.5 U	0.5 U	0.5 UJ
Chloromethane	0.5 U	0.5 U	0.5 U	0.5 UJ
Cyclohexane	0.5 UJ	0.5 U	0.5 UJ	0.5 UJ
Dibromochloromethane	0.5 U	0.5 U	0.5 U	0.5 UJ
Dichlorodifluoromethane (Freon-12)	0.5 UJ	0.5 UJ	0.5 UJ	0.5 UJ
Ethylbenzene	0.5 U	0.5 U	0.5 U	0.5 UJ
Methyl acetate	0.5 U	0.5 U	0.5 U	0.5 UJ
Methyl-tert-butyl ether (MTBE)	0.5 U	0.5 U	0.5 U	0.5 UJ
Methylcyclohexane	0.5 UJ	0.5 U	0.5 UJ	0.5 UJ
Methylene chloride	0.5 U	0.5 U	0.5 U	0.5 UJ
Styrene	0.5 U	0.5 U	0.5 U	0.5 UJ
Tetrachloroethene	0.5 U	0.5 U	0.5 U	0.5 UJ
Toluene	0.5 U	0.5 U	0.5 U	0.5 UJ
Trichloroethene	0.5 U	0.5 U	0.5 U	0.5 UJ
Trichlorofluoromethane(Freon-11)	0.5 U	0.5 U	0.5 U	0.5 UJ
Vinyl chloride	0.5 U	0.5 U	0.5 U	0.5 UJ
cis-1,2-Dichloroethene	0.5 U	0.5 U	0.5 U	0.5 UJ
cis-1,3-Dichloropropene	0.5 UJ	0.5 UJ	0.5 UJ	0.5 UJ
isopropylbenzene	0.5 U	0.5 U	0.5 U	0.5 UJ
trans-1,2-Dichloroethene	0.5 U	0.5 U	0.5 U	0.5 UJ
trans-1,3-Dichloropropene	0.5 UJ	0.5 UJ	0.5 UJ	0.5 UJ
SVOCs (UG/L)				
1,1-Biphenyl	5 UJ	5 UJ	5 U	5 UJ
1,2,4,5-Tetrachlorobenzene	5 UJ	5 UJ	5 U	5 UJ
2,2'-oxybis(1-chloropropane)	5 UJ	5 UJ	5 U	5 UJ
2,4,5-Trichlorophenol	20 UJ	20 UJ	20 U	20 UJ
2,4,6-Trichlorophenol	5 UJ	5 UJ	5 U	5 UJ
2,4-Dichlorophenol	5 UJ	5 UJ	5 U	5 UJ
2,4-Dimethylphenol	5 UJ	5 UJ	5 U	5 UJ
2,4-Dinitrophenol	20 UJ	20 UJ	20 U	20 UJ
2,4-Dinitrotoluene	5 UJ	5 UJ	5 U	5 UJ
2,6-Dinitrotoluene	5 UJ	5 UJ	5 U	5 UJ
2-Chloronaphthalene	5 UJ	5 UJ	5 U	5 UJ
2-Chlorophenol	5 UJ	5 UJ	5 U	5 UJ
2-Methylnaphthalene	5 UJ	5 UJ	5 U	5 UJ
2-Methylphenol	5 UJ	5 UJ	5 U	5 UJ
2-Nitroaniline	20 UJ	20 UJ	20 U	20 UJ
2-Nitrophenol	5 UJ	5 UJ	5 U	5 UJ
3,3'-Dichlorobenzidine	5 UJ	5 UJ	5 U	5 UJ
3-Nitroaniline	20 UJ	20 UJ	20 U	20 UJ

CTO-105
Site 95 Jaybird Road Groundwater Raw Analytical Data
MCB Camp Lejeune
July 2006

Station ID	IR95A-MW01		IR95A-MW02	IR95A-MW03
Sample ID	IR95A-GW01-06C	IR95A-GW01D-06C	IR95A-GW02-06C	IR95A-GW03-06C
Sample Date	07/31/06	07/31/06	08/01/06	07/31/06
Chemical Name				
4,6-Dinitro-2-methylphenol	20 UJ	20 UJ	20 U	20 UJ
4-Bromophenyl-phenylether	5 UJ	5 UJ	5 U	5 UJ
4-Chloro-3-methylphenol	5 UJ	5 UJ	5 U	5 UJ
4-Chloroaniline	5 UJ	5 UJ	5 U	5 UJ
4-Chlorophenyl-phenylether	5 UJ	5 UJ	5 U	5 UJ
4-Methylphenol	5 UJ	5 UJ	5 U	5 UJ
4-Nitroaniline	20 UJ	20 UJ	20 U	20 UJ
4-Nitrophenol	20 UJ	20 UJ	20 U	20 UJ
Acenaphthene	5 UJ	5 UJ	5 U	5 UJ
Acenaphthylene	5 UJ	5 UJ	5 U	5 UJ
Acetophenone	5 UJ	5 UJ	5 U	5 UJ
Anthracene	5 UJ	5 UJ	5 UJ	5 UJ
Atrazine	5 UJ	5 UJ	5 UJ	5 UJ
Benzaldehyde	5 UJ	5 UJ	5 U	5 UJ
Benzo(a)anthracene	5 UJ	5 UJ	5 U	5 UJ
Benzo(a)pyrene	5 UJ	5 UJ	5 UJ	5 UJ
Benzo(b)fluoranthene	5 UJ	5 UJ	5 UJ	5 UJ
Benzo(g,h,i)perylene	5 UJ	5 UJ	5 UJ	5 UJ
Benzo(k)fluoranthene	5 UJ	5 UJ	5 UJ	5 UJ
Butylbenzylphthalate	5 UJ	5 UJ	5 U	5 UJ
Caprolactam	5 UJ	5 UJ	5 U	5 UJ
Chrysene	5 UJ	5 UJ	5 U	5 UJ
Di-n-butylphthalate	5 UJ	5 UJ	5 U	5 UJ
Di-n-octylphthalate	5 UJ	5 UJ	5 U	5 UJ
Dibenz(a,h)anthracene	5 UJ	5 UJ	5 UJ	5 UJ
Dibenzofuran	5 UJ	5 UJ	5 U	5 UJ
Diethylphthalate	5 UJ	5 UJ	5 U	5 UJ
Dimethyl phthalate	5 UJ	5 UJ	5 U	5 UJ
Fluoranthene	5 UJ	5 UJ	5 U	5 UJ
Fluorene	5 UJ	5 UJ	5 U	5 UJ
Hexachlorobenzene	5 UJ	5 UJ	5 UJ	5 UJ
Hexachlorobutadiene	5 UJ	5 UJ	5 U	5 UJ
Hexachlorocyclopentadiene	5 UJ	5 UJ	5 U	5 UJ
Hexachloroethane	5 UJ	5 UJ	5 U	5 UJ
Indeno(1,2,3-cd)pyrene	5 UJ	5 UJ	5 UJ	5 UJ
Isophorone	5 UJ	5 UJ	5 U	5 UJ
Naphthalene	5 UJ	5 UJ	5 U	5 UJ
Nitrobenzene	5 UJ	5 UJ	5 U	5 UJ
Pentachlorophenol	5 UJ	5 UJ	5 U	5 UJ
Phenanthrene	5 UJ	5 UJ	5 UJ	5 UJ
Phenol	5 UJ	5 UJ	5 U	5 UJ
Pyrene	5 UJ	5 UJ	5 U	5 UJ
bis(2-Chloroethoxy)methane	5 UJ	5 UJ	5 U	5 UJ
bis(2-Chloroethyl)ether	5 UJ	5 UJ	5 U	5 UJ
bis(2-Ethylhexyl)phthalate	5 UJ	5 UJ	5 U	5 UJ
n-Nitroso-di-n-propylamine	5 UJ	5 UJ	5 U	5 UJ
n-Nitrosodiphenylamine	5 UJ	5 UJ	5 U	5 UJ
PEST/PCBs (UG/L)				
4,4'-DDD	0.02 UJ	0.02 UJ	0.02 U	0.02 UJ
4,4'-DDE	0.02 UJ	0.02 UJ	0.02 U	0.02 UJ
4,4'-DDT	0.02 UJ	0.02 UJ	0.02 U	0.02 UJ
Aldrin	0.01 UJ	0.01 UJ	0.01 U	0.01 UJ
Aroclor-1016	0.2 UJ	0.2 UJ	0.2 U	0.2 UJ
Aroclor-1221	0.4 UJ	0.4 UJ	0.4 U	0.4 UJ
Aroclor-1232	0.2 UJ	0.2 UJ	0.2 U	0.2 UJ
Aroclor-1242	0.2 UJ	0.2 UJ	0.2 U	0.2 UJ
Aroclor-1248	0.2 UJ	0.2 UJ	0.2 U	0.2 UJ
Aroclor-1254	0.2 UJ	0.2 UJ	0.2 U	0.2 UJ
Aroclor-1260	0.2 UJ	0.2 UJ	0.2 U	0.2 UJ
Dieldrin	0.02 UJ	0.02 UJ	0.02 U	0.02 UJ
Endosulfan I	0.01 UJ	0.01 UJ	0.01 U	0.01 UJ
Endosulfan II	0.02 UJ	0.02 UJ	0.02 U	0.02 UJ
Endosulfan sulfate	0.02 UJ	0.02 UJ	0.02 U	0.02 UJ
Endrin	0.02 UJ	0.02 UJ	0.02 U	0.02 UJ
Endrin aldehyde	0.02 UJ	0.02 UJ	0.02 U	0.02 UJ
Endrin ketone	0.02 UJ	0.02 UJ	0.02 U	0.02 UJ
Heptachlor	0.01 UJ	0.01 UJ	0.01 U	0.01 UJ
Heptachlor epoxide	0.01 UJ	0.01 UJ	0.01 U	0.01 UJ
Methoxychlor	0.1 UJ	0.1 UJ	0.1 U	0.1 UJ
Toxaphene	1 UJ	1 UJ	1 U	1 UJ

CTO-105
Site 95 Jaybird Road Groundwater Raw Analytical Data
MCB Camp Lejeune
July 2006

Station ID	IR95A-MW01		IR95A-MW02	IR95A-MW03
Sample ID	IR95A-GW01-06C	IR95A-GW01D-06C	IR95A-GW02-06C	IR95A-GW03-06C
Sample Date	07/31/06	07/31/06	08/01/06	07/31/06
Chemical Name				
alpha-BHC	0.01 UJ	0.01 UJ	0.01 U	0.01 UJ
alpha-Chlordane	0.01 UJ	0.01 UJ	0.01 U	0.01 UJ
beta-BHC	0.01 UJ	0.01 UJ	0.01 U	0.01 UJ
delta-BHC	0.01 UJ	0.01 UJ	0.01 U	0.01 UJ
gamma-BHC (Lindane)	0.01 UJ	0.01 UJ	0.01 U	0.01 UJ
gamma-Chlordane	0.01 UJ	0.01 UJ	0.01 U	0.01 UJ
Total Metals (UG/L)				
Aluminum	1,290	935	423	200 U
Antimony	2.3 J	60 U	1.3 J	60 U
Arsenic	10 U	10 U	10 U	10 U
Barium	200 U	200 U	200 U	200 U
Beryllium	5 U	5 U	5 U	5 U
Cadmium	5 U	5 U	5 U	0.16 J
Calcium	28,200	19,700	18,700	5,000 U
Chromium	10 U	10 U	10 U	10 U
Cobalt	50 U	50 U	50 U	50 U
Copper	25 U	25 U	25 U	25 U
Iron	2,080	1,460	829	121
Lead	10 U	10 U	10 U	10 U
Magnesium	5,000 U	5,000 U	5,000 U	5,000 U
Manganese	15.1	15 U	15 U	15 U
Mercury	0.26 U	0.26 U	0.26 U	0.26 U
Nickel	40 U	40 U	40 U	40 U
Potassium	679 J	680 J	546 J	876 J
Selenium	35 U	35 U	35 U	35 U
Silver	10 U	10 U	10 U	10 U
Sodium	10,800	9,950	10,200	9,960
Thallium	25 U	25 U	25 U	25 U
Vanadium	50 U	50 U	50 U	50 U
Zinc	60 U	60 U	60 U	60 U
Wet Chemistry (MG/L)				
Alkalinity	55	70	50	20 U
Chloride	18	21	17	15
Ethane	0.026 U	0.026 U	0.026 U	0.026 U
Ethene	0.035 U	0.035 U	0.034 U	0.035 U
Ferric iron	10 UJ	10 UJ	10 UJ	10 UJ
Ferrous iron	1.3 J	1.4 J	1 UJ	1 UJ
Methane	0.1	0.081	0.017	0.014 U
Nitrate	0.13 UJ	0.13 UJ	0.13 UJ	0.13 J
Nitrite	0.13 U	0.13 U	0.13 U	0.13 U
Sulfate	8.6	8.2	9.9	8.9
Sulfide	0.03 U	0.03 U	0.03 U	0.03 U
Total organic carbon (TOC)	10 U	10 U	10 U	10 U

Notes:
U- Analyte not detected
J- Reported value is estimated
UJ- Analyte not detected. Quantitation limit is imprecise
Shading represents exceedance of NC2L GW Standard
VOCs- Volatile Organic Compounds
SVOCs- Semi-volatile Organic Compounds
PEST/PCBs- Pesticide/Polychlorinated Biphenyls

MCB Camp Lejeune
Site 95 Subsurface Soil Exceedances of Screening Criteria
October 2006

Station ID	BaseWide Background 2002	Region IX PRGs - Residential Soil	NCSSL (May2005)	IR95A-IS100	IR95A-IS101			IR95A-IS102	IR95A-IS103	IR95A-IS115	IR95A-IS117	IR95A-IS119		IR95A-IS121	IR95A-IS123
Sample ID				IR95A-IS100-3-4-06D-1	IR95A-IS101-3-4-06D-1	IR95A-IS101-3-4-06D-2	IR95A-IS101D-3-4-06D-2	IR95A-IS102-3-4-06D-1	IR95A-IS103-3-4-06D-2	IR95A-IS115-3-4-06D-2	IR95A-IS117-3-4-06D-2	IR95A-IS119-3-4-06D-2	IR95A-IS119D-3-4-06D-2	IR95A-IS121-3-4-06D-2	IR95A-IS123-3-4-06D-2
Sample Date				10/03/06	10/03/06	10/04/06	10/04/06	10/03/06	10/04/06	10/04/06	10/04/06	10/04/06	10/04/06	10/04/06	10/04/06
Chemical Name															
VOCs (UG/KG)															
2-Butanone	--	22,000,000	17,100	11 U	11 U	NA	NA	14 U	NA	NA	NA	NA	NA	NA	NA
Acetone	--	14,000,000	2,810	11 U	11 U	NA	NA	14 U	NA	NA	NA	NA	NA	NA	NA
Methylene chloride	--	9,100	20.2	11 U	11 U	NA	NA	14 U	NA	NA	NA	NA	NA	NA	NA
SVOCs (UG/KG)															
Caprolactam	--	31,000,000	--	NA	NA	360 U	390 U	NA	39 J	380 U	420 U	340 U	350 U	390 U	370 U
Di-n-butylphthalate	--	6,100,000	24,800	NA	NA	42 J	54 J	NA	44 J	43 J	58 J	52 J	60 J	50 J	61 J
bis(2-Ethylhexyl)phthalate	--	35,000	6,670	NA	NA	140 J	140 J	NA	130 J	160 J	430	210 J	300 J	86 J	170 J
PEST/PCBs (UG/KG)															
4,4'-DDE	--	1,700	--	NA	NA	3.6 U	2.5 J	NA	2.6 J	3.7 U	4.2 U	3.4 U	3.5 U	3.9 U	3.7 U
4,4'-DDT	--	1,700	1,360	NA	NA	3.6 U	3.9 U	NA	3.7 U	3.7 U	4.2 U	3.4 U	3.5 U	3.9 U	3.7 U
Endrin aldehyde	--	18,000	--	NA	NA	3.6 U	3.9 U	NA	3.7 U	3.7 U	4.2 U	3.4 U	3.5 U	3.9 U	3.7 U
Methoxychlor	--	310,000	56,100	NA	NA	19 U	20 U	NA	19 U	19 U	22 U	18 U	18 U	20 U	19 U
Total Metals (MG/KG)															
Aluminum	13,061	76,000	--	NA	NA	1,610	1,240	NA	4,790	1,390	1,930	481	732	7,870	4,730
Antimony	0.392	31	5.42	NA	NA	4.7 UJ	0.085 UJ	NA	0.27 UJ	0.099 UJ	5.4 UJ	0.053 UJ	0.059 UJ	0.14 UJ	0.29 UJ
Arsenic	5.29	0.39	5.24	NA	NA	0.14 J-	0.14 J-	NA	***0.51 J-***	0.19 J	***0.83 J***	0.14 J	0.24 J	1.3 J-	0.19 J-
Barium	37.34	5,400	848	NA	NA	5.9 J	4.8 J	NA	9.9 J	5.5 J	4.5 J	1.9 J	2.2 J	13.2 J	7 J
Beryllium	0.432	150	3.38	NA	NA	0.027 J	0.03 J	NA	0.075 J	0.03 J	0.039 J	0.019 J	0.021 J	0.094 J	0.067 J
Cadmium	--	37	0.95	NA	NA	0.38 U	0.42 U	NA	0.38 U	0.4 U	0.45 U	0.35 U	0.36 U	0.43 U	0.38 U
Calcium	944	--	--	NA	NA	186 J	126 J	NA	187 J	105 J	51.6 J	44.9 J	66.6 J	308 J	199 J
Chromium	30.9	30	27.2	NA	NA	1.8	2.3	NA	7	2.1	3.6	1.6	1.8	9.6	5.3
Cobalt	2.33	900	--	NA	NA	0.13 U	0.16 U	NA	0.3 J	0.19 J	0.2 J	0.075 J	0.082 J	0.58 J	0.28 J
Copper	7.03	3,100	704	NA	NA	3.2 U	3.2 U	NA	3.1 U	2.9 U	3.1 U	2.3 U	2.5 U	5.3 U	3.5 U
Iron	16,984	23,000	151	NA	NA	996	561	NA	1,910	575	1,480	286	331	3,370	1,030
Lead	12.6	400	270	NA	NA	2.2	2.3	NA	7	2.4	2.9	1.7	2.3	3.6	2.3
Magnesium	1,022	--	--	NA	NA	51.2 J	54.9 J	NA	150 J	61.8 J	79.4 J	22.7 J	28.3 J	264 J	141 J
Manganese	23.6	1,800	65.2	NA	NA	15.8 J	4.4 J	NA	14.5 J	4.4	3.8	1.8	1.8	6.8 J	3.4 J
Mercury	0.096	23	0.015	NA	NA	0.1 U	0.099 U	NA	0.094 U	0.094 U	0.11 U	0.086 U	0.097 U	0.099 U	0.09 U
Nickel	4.73	1,600	56.4	NA	NA	0.61 J	0.55 J	NA	1.8 J	0.46 J	0.53 J	0.2 U	0.22 U	2.3 J	0.83 J
Potassium	1,043	--	--	NA	NA	59.1 U	66.8 U	NA	144 J	61.6 U	101 J	44.9 U	49.1 U	342 J	254 J
Silver	0.18	390	0.217	NA	NA	0.78 U	0.82 U	NA	0.034 J	0.8 U	0.88 U	0.71 U	0.72 U	0.022 J	0.76 U
Sodium	--	--	--	NA	NA	31.3 U	35.5 J	NA	26.4 U	14 U	17.6 U	9.1 U	9.8 U	24.8 U	22.7 U
Vanadium	44.7	78	--	NA	NA	2.8 J	2.4 J	NA	6.8	2.2 J	7	2.1 J	2.1 J	11.8	5.6
Zinc	21.5	23,000	550	NA	NA	2.4 U	3.2 U	NA	12.3	3.1 U	2.3 U	1.8 U	2.3 U	4.8 U	3.9 U

Notes:

Shading Exceeds NCSSLs (North Carolina Soil Screening Levels)

Bold Frame Exceeds Basewide Background Concentrations

Bold and Italicized Exceeds Region IX PRGs

U- Analyte not detected

J- Reported value is estimated

J- - Reported value is biased low

UJ- Analyte not detected. Quantiation limit is imprecise

NA- Not analyzed

VOCs- Volatile Organic Compounds

SVOCs- Semi-Volatile Organic Compounds

PEST/PCBs- Pesticide/Polychlorinated Biphenyls

Site 95 Subsurface Soil Raw Analytical Data
October 2006

Station ID	IR95A-IS100	IR95A-IS101			IR95A-IS102	IR95A-IS103	IR95A-IS115	IR95A-IS117	IR95A-IS119		IR95A-IS121	IR95A-IS123	IR95B-IS101	IR95B-IS103	IR95B-IS105
Sample ID	IR95A-IS100-3-4-06D-1	IR95A-IS101-3-4-06D-1	IR95A-IS101-3-4-06D-2	IR95A-IS101D-3-4-06D-2	IR95A-IS102-3-4-06D-1	IR95A-IS103-3-4-06D-2	IR95A-IS115-3-4-06D-2	IR95A-IS117-3-4-06D-2	IR95A-IS119-3-4-06D-2	IR95A-IS119D-3-4-06D-2	IR95A-IS121-3-4-06D-2	IR95A-IS123-3-4-06D-2	IR95B-IS101-3-4-06D-2	IR95B-IS103-3-4-06D-2	IR95B-IS105-3-4-06D-2
Sample Date	10/03/06	10/03/06	10/04/06	10/04/06	10/03/06	10/04/06	10/04/06	10/04/06	10/04/06	10/04/06	10/04/06	10/04/06	10/05/06	10/05/06	10/05/06
Chemical Name															
Volatile Organic Compounds (UG/KG)															
1,1,1-Trichloroethane	11 U	11 U	NA	NA	14 U	NA	NA	NA	NA	NA	NA	NA	NA	NA	NA
1,1,2,2-Tetrachloroethane	11 U	11 U	NA	NA	14 U	NA	NA	NA	NA	NA	NA	NA	NA	NA	NA
1,1,2-Trichloro-1,2,2-trifluoroethane(Freon-113)	11 U	11 U	NA	NA	14 U	NA	NA	NA	NA	NA	NA	NA	NA	NA	NA
1,1,2-Trichloroethane	11 U	11 U	NA	NA	14 U	NA	NA	NA	NA	NA	NA	NA	NA	NA	NA
1,1-Dichloroethane	11 U	11 U	NA	NA	14 U	NA	NA	NA	NA	NA	NA	NA	NA	NA	NA
1,1-Dichloroethene	11 U	11 U	NA	NA	14 U	NA	NA	NA	NA	NA	NA	NA	NA	NA	NA
1,2,4-Trichlorobenzene	11 U	11 U	NA	NA	14 U	NA	NA	NA	NA	NA	NA	NA	NA	NA	NA
1,2-Dibromo-3-chloropropane	11 U	11 U	NA	NA	14 U	NA	NA	NA	NA	NA	NA	NA	NA	NA	NA
1,2-Dibromoethane	11 U	11 U	NA	NA	14 U	NA	NA	NA	NA	NA	NA	NA	NA	NA	NA
1,2-Dichlorobenzene	11 U	11 U	NA	NA	14 U	NA	NA	NA	NA	NA	NA	NA	NA	NA	NA
1,2-Dichloroethane	11 U	11 U	NA	NA	14 U	NA	NA	NA	NA	NA	NA	NA	NA	NA	NA
1,2-Dichloropropane	11 U	11 U	NA	NA	14 U	NA	NA	NA	NA	NA	NA	NA	NA	NA	NA
1,3-Dichlorobenzene	11 U	11 U	NA	NA	14 U	NA	NA	NA	NA	NA	NA	NA	NA	NA	NA
1,4-Dichlorobenzene	11 U	11 U	NA	NA	14 U	NA	NA	NA	NA	NA	NA	NA	NA	NA	NA
2-Butanone	11 U	11 U	NA	NA	14 U	NA	NA	NA	NA	NA	NA	NA	NA	NA	NA
2-Hexanone	11 U	11 U	NA	NA	14 U	NA	NA	NA	NA	NA	NA	NA	NA	NA	NA
4-Methyl-2-pentanone	11 U	11 U	NA	NA	14 U	NA	NA	NA	NA	NA	NA	NA	NA	NA	NA
Acetone	11 U	11 U	NA	NA	14 U	NA	NA	NA	NA	NA	NA	NA	NA	NA	NA
Benzene	11 U	11 U	NA	NA	14 U	NA	NA	NA	NA	NA	NA	NA	NA	NA	NA
Bromodichloromethane	11 U	11 U	NA	NA	14 U	NA	NA	NA	NA	NA	NA	NA	NA	NA	NA
Bromoform	11 U	11 U	NA	NA	14 U	NA	NA	NA	NA	NA	NA	NA	NA	NA	NA
Bromomethane	11 U	11 U	NA	NA	14 U	NA	NA	NA	NA	NA	NA	NA	NA	NA	NA
Carbon disulfide	11 U	11 U	NA	NA	14 U	NA	NA	NA	NA	NA	NA	NA	NA	NA	NA
Carbon tetrachloride	11 U	11 U	NA	NA	14 U	NA	NA	NA	NA	NA	NA	NA	NA	NA	NA
Chlorobenzene	11 U	11 U	NA	NA	14 U	NA	NA	NA	NA	NA	NA	NA	NA	NA	NA
Chloroethane	11 U	11 U	NA	NA	14 U	NA	NA	NA	NA	NA	NA	NA	NA	NA	NA
Chloroform	11 U	11 U	NA	NA	14 U	NA	NA	NA	NA	NA	NA	NA	NA	NA	NA
Chloromethane	11 U	11 U	NA	NA	14 U	NA	NA	NA	NA	NA	NA	NA	NA	NA	NA
Cyclohexane	11 U	11 U	NA	NA	14 U	NA	NA	NA	NA	NA	NA	NA	NA	NA	NA
Dibromochloromethane	11 U	11 U	NA	NA	14 U	NA	NA	NA	NA	NA	NA	NA	NA	NA	NA
Dichlorodifluoromethane (Freon-12)	11 U	11 U	NA	NA	14 U	NA	NA	NA	NA	NA	NA	NA	NA	NA	NA
Ethylbenzene	11 U	11 U	NA	NA	14 U	NA	NA	NA	NA	NA	NA	NA	NA	NA	NA
Isopropylbenzene	11 U	11 U	NA	NA	14 U	NA	NA	NA	NA	NA	NA	NA	NA	NA	NA
Methyl acetate	11 UJ	11 U	NA	NA	14 U	NA	NA	NA	NA	NA	NA	NA	NA	NA	NA
Methyl-tert-butyl ether (MTBE)	11 U	11 U	NA	NA	14 U	NA	NA	NA	NA	NA	NA	NA	NA	NA	NA
Methylcyclohexane	11 U	11 U	NA	NA	14 U	NA	NA	NA	NA	NA	NA	NA	NA	NA	NA
Methylene chloride	11 U	11 U	NA	NA	14 U	NA	NA	NA	NA	NA	NA	NA	NA	NA	NA
Styrene	11 U	11 U	NA	NA	14 U	NA	NA	NA	NA	NA	NA	NA	NA	NA	NA
Tetrachloroethene	11 U	11 U	NA	NA	14 U	NA	NA	NA	NA	NA	NA	NA	NA	NA	NA
Toluene	11 U	11 U	NA	NA	14 U	NA	NA	NA	NA	NA	NA	NA	NA	NA	NA
Trichloroethene	11 U	11 U	NA	NA	14 U	NA	NA	NA	NA	NA	NA	NA	NA	NA	NA
Trichlorofluoromethane(Freon-11)	11 UJ	11 U	NA	NA	14 U	NA	NA	NA	NA	NA	NA	NA	NA	NA	NA
Vinyl chloride	11 U	11 U	NA	NA	14 U	NA	NA	NA	NA	NA	NA	NA	NA	NA	NA
Xylene, total	11 U	11 U	NA	NA	14 U	NA	NA	NA	NA	NA	NA	NA	NA	NA	NA
cis-1,2-Dichloroethene	11 U	11 U	NA	NA	14 U	NA	NA	NA	NA	NA	NA	NA	NA	NA	NA
cis-1,3-Dichloropropene	11 U	11 U	NA	NA	14 U	NA	NA	NA	NA	NA	NA	NA	NA	NA	NA
trans-1,2-Dichloroethene	11 U	11 U	NA	NA	14 U	NA	NA	NA	NA	NA	NA	NA	NA	NA	NA
trans-1,3-Dichloropropene	11 U	11 U	NA	NA	14 U	NA	NA	NA	NA	NA	NA	NA	NA	NA	NA

Station ID	IR95B-IS107	IR95B-IS109		IR95B-IS111	IR95B-IS113	IR95B-IS114	IR95B-IS115		IR95B-IS116		IR95B-IS117		IR95B-IS119	IR95B-IS121	IR95B-IS123
Sample ID	IR95B-IS107-3-4-06D-2	IR95B-IS109-3-4-06D-2	IR95B-IS109D-3-4-06D-2	IR95B-IS111-3-4-06D-2	IR95B-IS113-3-4-06D-2	IR95B-IS114-3-4-06D-1	IR95B-IS115-3-4-06D-1	IR95B-IS115-3-4-06D-2	IR95B-IS116-3-4-06D-1	IR95B-IS116D-3-4-06D-1	IR95B-IS117-3-4-06D-2	IR95B-IS117D-3-4-06D-2	IR95B-IS119-3-4-06D-2	IR95B-IS121-3-4-06D-2	IR95B-IS123-3-4-06D-2
Sample Date	10/05/06	10/05/06	10/05/06	10/05/06	10/05/06	10/03/06	10/03/06	10/05/06	10/03/06	10/03/06	10/05/06	10/05/06	10/05/06	10/05/06	10/05/06
Chemical Name															
Volatile Organic Compounds (UG/KG)															
1,1,1-Trichloroethane	NA	NA	NA	NA	NA	10 U	10 U	NA	11 U	13 U	NA	NA	NA	NA	NA
1,1,2,2-Tetrachloroethane	NA	NA	NA	NA	NA	10 U	10 U	NA	11 U	13 U	NA	NA	NA	NA	NA
1,1,2-Trichloro-1,2,2-trifluoroethane(Freon-113)	NA	NA	NA	NA	NA	10 U	10 U	NA	11 U	13 U	NA	NA	NA	NA	NA
1,1,2-Trichloroethane	NA	NA	NA	NA	NA	10 U	10 U	NA	11 U	13 U	NA	NA	NA	NA	NA
1,1-Dichloroethane	NA	NA	NA	NA	NA	10 U	10 U	NA	11 U	13 U	NA	NA	NA	NA	NA
1,1-Dichloroethene	NA	NA	NA	NA	NA	10 U	10 U	NA	11 U	13 U	NA	NA	NA	NA	NA
1,2,4-Trichlorobenzene	NA	NA	NA	NA	NA	10 U	10 U	NA	11 U	13 U	NA	NA	NA	NA	NA
1,2-Dibromo-3-chloropropane	NA	NA	NA	NA	NA	10 U	10 U	NA	11 U	13 U	NA	NA	NA	NA	NA
1,2-Dibromoethane	NA	NA	NA	NA	NA	10 U	10 U	NA	11 U	13 U	NA	NA	NA	NA	NA
1,2-Dichlorobenzene	NA	NA	NA	NA	NA	10 U	10 U	NA	11 U	13 U	NA	NA	NA	NA	NA
1,2-Dichloroethane	NA	NA	NA	NA	NA	10 U	10 U	NA	11 U	13 U	NA	NA	NA	NA	NA
1,2-Dichloropropane	NA	NA	NA	NA	NA	10 U	10 U	NA	11 U	13 U	NA	NA	NA	NA	NA
1,3-Dichlorobenzene	NA	NA	NA	NA	NA	10 U	10 U	NA	11 U	13 U	NA	NA	NA	NA	NA
1,4-Dichlorobenzene	NA	NA	NA	NA	NA	10 U	10 U	NA	11 U	13 U	NA	NA	NA	NA	NA
2-Butanone	NA	NA	NA	NA	NA	10 U	10 U	NA	11 U	46	NA	NA	NA	NA	NA
2-Hexanone	NA	NA	NA	NA	NA	10 U	10 U	NA	11 U	13 U	NA	NA	NA	NA	NA
4-Methyl-2-pentanone	NA	NA	NA	NA	NA	10 U	10 U	NA	11 U	13 U	NA	NA	NA	NA	NA
Acetone	NA	NA	NA	NA	NA	10 U	10 U	NA	11 U	7 J	NA	NA	NA	NA	NA
Benzene	NA	NA	NA	NA	NA	10 U	10 U	NA	11 U	13 U	NA	NA	NA	NA	NA
Bromodichloromethane	NA	NA	NA	NA	NA	10 U	10 U	NA	11 U	13 U	NA	NA	NA	NA	NA
Bromoform	NA	NA	NA	NA	NA	10 U	10 U	NA	11 U	13 U	NA	NA	NA	NA	NA
Bromomethane	NA	NA	NA	NA	NA	10 U	10 U	NA	11 U	13 U	NA	NA	NA	NA	NA
Carbon disulfide	NA	NA	NA	NA	NA	10 U	10 U	NA	11 U	13 U	NA	NA	NA	NA	NA
Carbon tetrachloride	NA	NA	NA	NA	NA	10 U	10 U	NA	11 U	13 U	NA	NA	NA	NA	NA
Chlorobenzene	NA	NA	NA	NA	NA	10 U	10 U	NA	11 U	13 U	NA	NA	NA	NA	NA
Chloroethane	NA	NA	NA	NA	NA	10 U	10 U	NA	11 U	13 U	NA	NA	NA	NA	NA
Chloroform	NA	NA	NA	NA	NA	10 U	10 U	NA	11 U	13 U	NA	NA	NA	NA	NA
Chloromethane	NA	NA	NA	NA	NA	10 U	10 U	NA	11 U	13 U	NA	NA	NA	NA	NA
Cyclohexane	NA	NA	NA	NA	NA	10 U	10 U	NA	11 U	13 U	NA	NA	NA	NA	NA
Dibromochloromethane	NA	NA	NA	NA	NA	10 U	10 U	NA	11 U	13 U	NA	NA	NA	NA	NA
Dichlorodifluoromethane (Freon-12)	NA	NA	NA	NA	NA	10 U	10 U	NA	11 U	13 U	NA	NA	NA	NA	NA
Ethylbenzene	NA	NA	NA	NA	NA	10 U	10 U	NA	11 U	13 U	NA	NA	NA	NA	NA
Isopropylbenzene	NA	NA	NA	NA	NA	10 U	10 U	NA	11 U	13 U	NA	NA	NA	NA	NA
Methyl acetate	NA	NA	NA	NA	NA	10 UJ	10 UJ	NA	11 UJ	13 UJ	NA	NA	NA	NA	NA
Methyl-tert-butyl ether (MTBE)	NA	NA	NA	NA	NA	10 U	10 U	NA	11 U	13 U	NA	NA	NA	NA	NA
Methylcyclohexane	NA	NA	NA	NA	NA	10 U	10 U	NA	11 U	13 U	NA	NA	NA	NA	NA
Methylene chloride	NA	NA	NA	NA	NA	10 U	10 U	NA	11 U	2 J	NA	NA	NA	NA	NA
Styrene	NA	NA	NA	NA	NA	10 U	10 U	NA	11 U	13 U	NA	NA	NA	NA	NA
Tetrachloroethene	NA	NA	NA	NA	NA	10 U	10 U	NA	11 U	13 U	NA	NA	NA	NA	NA
Toluene	NA	NA	NA	NA	NA	10 U	10 U	NA	11 U	13 U	NA	NA	NA	NA	NA
Trichloroethene	NA	NA	NA	NA	NA	10 U	10 U	NA	11 U	13 U	NA	NA	NA	NA	NA
Trichlorofluoromethane(Freon-11)	NA	NA	NA	NA	NA	10 UJ	10 UJ	NA	11 UJ	13 UJ	NA	NA	NA	NA	NA
Vinyl chloride	NA	NA	NA	NA	NA	10 U	10 U	NA	11 U	13 U	NA	NA	NA	NA	NA
Xylene, total	NA	NA	NA	NA	NA	10 U	10 U	NA	11 U	13 U	NA	NA	NA	NA	NA
cis-1,2-Dichloroethene	NA	NA	NA	NA	NA	10 U	10 U	NA	11 U	13 U	NA	NA	NA	NA	NA
cis-1,3-Dichloropropene	NA	NA	NA	NA	NA	10 U	10 U	NA	11 U	13 U	NA	NA	NA	NA	NA
trans-1,2-Dichloroethene	NA	NA	NA	NA	NA	10 U	10 U	NA	11 U	13 U	NA	NA	NA	NA	NA
trans-1,3-Dichloropropene	NA	NA	NA	NA	NA	10 U	10 U	NA	11 U	13 U	NA	NA	NA	NA	NA

Station ID	IR95B-IS125	IR95B-IS127		IR95B-IS129	IR95C-IS100	IR95C-IS101		IR95C-IS102	IR95C-IS103	IR95C-IS105	IR95C-IS107	IR95C-IS109	IR95C-IS111	IR95C-IS113	
Sample ID	IR95B-IS125-3-4-06D-2	IR95B-IS127-3-4-06D-2	IR95B-IS127D-3-4-06D-2	IR95B-IS129-3-4-06D-2	IR95C-IS100-3-4-06D-1	IR95C-IS101-3-4-06D-1	IR95C-IS101-3-4-06D-2	IR95C-IS102-3-4-06D-1	IR95C-IS103-3-4-06D-2	IR95C-IS105-3-4-06D-2	IR95C-IS107-3-4-06D-2	IR95C-IS109-3-4-06D-2	IR95C-IS111-3-4-06D-2	IR95C-IS113-3-4-06D-2	IR95C-IS113D-3-4-06D-2
Sample Date	10/05/06	10/05/06	10/05/06	10/05/06	10/03/06	10/03/06	10/03/06	10/03/06	10/03/06	10/03/06	10/03/06	10/03/06	10/03/06	10/03/06	10/03/06
Chemical Name															
Volatile Organic Compounds (UG/KG)															
1,1,1-Trichloroethane	NA	NA	NA	NA	12 U	11 U	NA	10 U	NA	NA	NA	NA	NA	NA	NA
1,1,2,2-Tetrachloroethane	NA	NA	NA	NA	12 U	11 U	NA	10 U	NA	NA	NA	NA	NA	NA	NA
1,1,2-Trichloro-1,2,2-trifluoroethane(Freon-113)	NA	NA	NA	NA	12 U	11 U	NA	10 U	NA	NA	NA	NA	NA	NA	NA
1,1,2-Trichloroethane	NA	NA	NA	NA	12 U	11 U	NA	10 U	NA	NA	NA	NA	NA	NA	NA
1,1-Dichloroethane	NA	NA	NA	NA	12 U	11 U	NA	10 U	NA	NA	NA	NA	NA	NA	NA
1,1-Dichloroethene	NA	NA	NA	NA	12 U	11 U	NA	10 U	NA	NA	NA	NA	NA	NA	NA
1,2,4-Trichlorobenzene	NA	NA	NA	NA	12 U	11 U	NA	10 U	NA	NA	NA	NA	NA	NA	NA
1,2-Dibromo-3-chloropropane	NA	NA	NA	NA	12 U	11 U	NA	10 U	NA	NA	NA	NA	NA	NA	NA
1,2-Dibromoethane	NA	NA	NA	NA	12 U	11 U	NA	10 U	NA	NA	NA	NA	NA	NA	NA
1,2-Dichlorobenzene	NA	NA	NA	NA	12 U	11 U	NA	10 U	NA	NA	NA	NA	NA	NA	NA
1,2-Dichloroethane	NA	NA	NA	NA	12 U	11 U	NA	10 U	NA	NA	NA	NA	NA	NA	NA
1,2-Dichloropropane	NA	NA	NA	NA	12 U	11 U	NA	10 U	NA	NA	NA	NA	NA	NA	NA
1,3-Dichlorobenzene	NA	NA	NA	NA	12 U	11 U	NA	10 U	NA	NA	NA	NA	NA	NA	NA
1,4-Dichlorobenzene	NA	NA	NA	NA	12 U	11 U	NA	10 U	NA	NA	NA	NA	NA	NA	NA
2-Butanone	NA	NA	NA	NA	12 U	11 U	NA	10 U	NA	NA	NA	NA	NA	NA	NA
2-Hexanone	NA	NA	NA	NA	12 U	11 U	NA	10 U	NA	NA	NA	NA	NA	NA	NA
4-Methyl-2-pentanone	NA	NA	NA	NA	12 U	11 U	NA	10 U	NA	NA	NA	NA	NA	NA	NA
Acetone	NA	NA	NA	NA	12 U	11 U	NA	10 U	NA	NA	NA	NA	NA	NA	NA
Benzene	NA	NA	NA	NA	12 U	11 U	NA	10 U	NA	NA	NA	NA	NA	NA	NA
Bromodichloromethane	NA	NA	NA	NA	12 U	11 U	NA	10 U	NA	NA	NA	NA	NA	NA	NA
Bromoform	NA	NA	NA	NA	12 U	11 U	NA	10 U	NA	NA	NA	NA	NA	NA	NA
Bromomethane	NA	NA	NA	NA	12 U	11 U	NA	10 U	NA	NA	NA	NA	NA	NA	NA
Carbon disulfide	NA	NA	NA	NA	12 U	11 U	NA	10 U	NA	NA	NA	NA	NA	NA	NA
Carbon tetrachloride	NA	NA	NA	NA	12 U	11 U	NA	10 U	NA	NA	NA	NA	NA	NA	NA
Chlorobenzene	NA	NA	NA	NA	12 U	11 U	NA	10 U	NA	NA	NA	NA	NA	NA	NA
Chloroethane	NA	NA	NA	NA	12 U	11 U	NA	10 U	NA	NA	NA	NA	NA	NA	NA
Chloroform	NA	NA	NA	NA	12 U	11 U	NA	10 U	NA	NA	NA	NA	NA	NA	NA
Chloromethane	NA	NA	NA	NA	12 U	11 U	NA	10 U	NA	NA	NA	NA	NA	NA	NA
Cyclohexane	NA	NA	NA	NA	12 U	11 U	NA	10 U	NA	NA	NA	NA	NA	NA	NA
Dibromochloromethane	NA	NA	NA	NA	12 U	11 U	NA	10 U	NA	NA	NA	NA	NA	NA	NA
Dichlorodifluoromethane (Freon-12)	NA	NA	NA	NA	12 U	11 U	NA	10 U	NA	NA	NA	NA	NA	NA	NA
Ethylbenzene	NA	NA	NA	NA	12 U	11 U	NA	10 U	NA	NA	NA	NA	NA	NA	NA
Isopropylbenzene	NA	NA	NA	NA	12 U	11 U	NA	10 U	NA	NA	NA	NA	NA	NA	NA
Methyl acetate	NA	NA	NA	NA	12 UJ	11 UJ	NA	10 UJ	NA	NA	NA	NA	NA	NA	NA
Methyl-tert-butyl ether (MTBE)	NA	NA	NA	NA	12 U	11 U	NA	10 U	NA	NA	NA	NA	NA	NA	NA
Methylcyclohexane	NA	NA	NA	NA	12 U	11 U	NA	10 U	NA	NA	NA	NA	NA	NA	NA
Methylene chloride	NA	NA	NA	NA	12 U	11 U	NA	10 U	NA	NA	NA	NA	NA	NA	NA
Styrene	NA	NA	NA	NA	12 U	11 U	NA	10 U	NA	NA	NA	NA	NA	NA	NA
Tetrachloroethene	NA	NA	NA	NA	12 U	11 U	NA	10 U	NA	NA	NA	NA	NA	NA	NA
Toluene	NA	NA	NA	NA	12 U	11 U	NA	10 U	NA	NA	NA	NA	NA	NA	NA
Trichloroethene	NA	NA	NA	NA	12 U	11 U	NA	10 U	NA	NA	NA	NA	NA	NA	NA
Trichlorofluoromethane(Freon-11)	NA	NA	NA	NA	12 UJ	11 UJ	NA	10 UJ	NA	NA	NA	NA	NA	NA	NA
Vinyl chloride	NA	NA	NA	NA	12 U	11 U	NA	10 U	NA	NA	NA	NA	NA	NA	NA
Xylene, total	NA	NA	NA	NA	12 U	11 U	NA	10 U	NA	NA	NA	NA	NA	NA	NA
cis-1,2-Dichloroethene	NA	NA	NA	NA	12 U	11 U	NA	10 U	NA	NA	NA	NA	NA	NA	NA
cis-1,3-Dichloropropene	NA	NA	NA	NA	12 U	11 U	NA	10 U	NA	NA	NA	NA	NA	NA	NA
trans-1,2-Dichloroethene	NA	NA	NA	NA	12 U	11 U	NA	10 U	NA	NA	NA	NA	NA	NA	NA
trans-1,3-Dichloropropene	NA	NA	NA	NA	12 U	11 U	NA	10 U	NA	NA	NA	NA	NA	NA	NA

Station ID	IR95C-IS115	IR95C-IS117	IR95C-IS119	IR95C-IS121	IR95C-IS123		IR95C-IS125	IR95C-IS127
Sample ID	IR95C-IS115-3-4-06D-2	IR95C-IS117-3-4-06D-2	IR95C-IS119-3-4-06D-2	IR95C-IS121-3-4-06D-2	IR95C-IS123-3-4-06D-2	IR95C-IS123D-3-4-06D-2	IR95C-IS125-3-4-06D-2	IR95C-IS127-3-4-06D-2
Sample Date	10/03/06	10/03/06	10/03/06	10/03/06	10/03/06	10/03/06	10/03/06	10/03/06
Chemical Name								
Volatile Organic Compounds (UG/KG)								
1,1,1-Trichloroethane	NA	NA	NA	NA	NA	NA	NA	NA
1,1,2,2-Tetrachloroethane	NA	NA	NA	NA	NA	NA	NA	NA
1,1,2-Trichloro-1,2,2-trifluoroethane(Freon-113)	NA	NA	NA	NA	NA	NA	NA	NA
1,1,2-Trichloroethane	NA	NA	NA	NA	NA	NA	NA	NA
1,1-Dichloroethane	NA	NA	NA	NA	NA	NA	NA	NA
1,1-Dichloroethene	NA	NA	NA	NA	NA	NA	NA	NA
1,2,4-Trichlorobenzene	NA	NA	NA	NA	NA	NA	NA	NA
1,2-Dibromo-3-chloropropane	NA	NA	NA	NA	NA	NA	NA	NA
1,2-Dibromoethane	NA	NA	NA	NA	NA	NA	NA	NA
1,2-Dichlorobenzene	NA	NA	NA	NA	NA	NA	NA	NA
1,2-Dichloroethane	NA	NA	NA	NA	NA	NA	NA	NA
1,2-Dichloropropane	NA	NA	NA	NA	NA	NA	NA	NA
1,3-Dichlorobenzene	NA	NA	NA	NA	NA	NA	NA	NA
1,4-Dichlorobenzene	NA	NA	NA	NA	NA	NA	NA	NA
2-Butanone	NA	NA	NA	NA	NA	NA	NA	NA
2-Hexanone	NA	NA	NA	NA	NA	NA	NA	NA
4-Methyl-2-pentanone	NA	NA	NA	NA	NA	NA	NA	NA
Acetone	NA	NA	NA	NA	NA	NA	NA	NA
Benzene	NA	NA	NA	NA	NA	NA	NA	NA
Bromodichloromethane	NA	NA	NA	NA	NA	NA	NA	NA
Bromoform	NA	NA	NA	NA	NA	NA	NA	NA
Bromomethane	NA	NA	NA	NA	NA	NA	NA	NA
Carbon disulfide	NA	NA	NA	NA	NA	NA	NA	NA
Carbon tetrachloride	NA	NA	NA	NA	NA	NA	NA	NA
Chlorobenzene	NA	NA	NA	NA	NA	NA	NA	NA
Chloroethane	NA	NA	NA	NA	NA	NA	NA	NA
Chloroform	NA	NA	NA	NA	NA	NA	NA	NA
Chloromethane	NA	NA	NA	NA	NA	NA	NA	NA
Cyclohexane	NA	NA	NA	NA	NA	NA	NA	NA
Dibromochloromethane	NA	NA	NA	NA	NA	NA	NA	NA
Dichlorodifluoromethane (Freon-12)	NA	NA	NA	NA	NA	NA	NA	NA
Ethylbenzene	NA	NA	NA	NA	NA	NA	NA	NA
Isopropylbenzene	NA	NA	NA	NA	NA	NA	NA	NA
Methyl acetate	NA	NA	NA	NA	NA	NA	NA	NA
Methyl-tert-butyl ether (MTBE)	NA	NA	NA	NA	NA	NA	NA	NA
Methylcyclohexane	NA	NA	NA	NA	NA	NA	NA	NA
Methylene chloride	NA	NA	NA	NA	NA	NA	NA	NA
Styrene	NA	NA	NA	NA	NA	NA	NA	NA
Tetrachloroethene	NA	NA	NA	NA	NA	NA	NA	NA
Toluene	NA	NA	NA	NA	NA	NA	NA	NA
Trichloroethene	NA	NA	NA	NA	NA	NA	NA	NA
Trichlorofluoromethane(Freon-11)	NA	NA	NA	NA	NA	NA	NA	NA
Vinyl chloride	NA	NA	NA	NA	NA	NA	NA	NA
Xylene, total	NA	NA	NA	NA	NA	NA	NA	NA
cis-1,2-Dichloroethene	NA	NA	NA	NA	NA	NA	NA	NA
cis-1,3-Dichloropropene	NA	NA	NA	NA	NA	NA	NA	NA
trans-1,2-Dichloroethene	NA	NA	NA	NA	NA	NA	NA	NA
trans-1,3-Dichloropropene	NA	NA	NA	NA	NA	NA	NA	NA

Station ID	IR95A-IS100	IR95A-IS101			IR95A-IS102	IR95A-IS103	IR95A-IS115	IR95A-IS117	IR95A-IS119		IR95A-IS121	IR95A-IS123	IR95B-IS101	IR95B-IS103	IR95B-IS105
Sample ID	IR95A-IS100-3-4-06D-1	IR95A-IS101-3-4-06D-1	IR95A-IS101-3-4-06D-2	IR95A-IS101D-3-4-06D-2	IR95A-IS102-3-4-06D-1	IR95A-IS103-3-4-06D-2	IR95A-IS115-3-4-06D-2	IR95A-IS117-3-4-06D-2	IR95A-IS119-3-4-06D-2	IR95A-IS119D-3-4-06D-2	IR95A-IS121-3-4-06D-2	IR95A-IS123-3-4-06D-2	IR95B-IS101-3-4-06D-2	IR95B-IS103-3-4-06D-2	IR95B-IS105-3-4-06D-2
Sample Date	10/03/06	10/03/06	10/04/06	10/04/06	10/03/06	10/04/06	10/04/06	10/04/06	10/04/06	10/04/06	10/04/06	10/04/06	10/05/06	10/05/06	10/05/06
Chemical Name															
Semi-volatile Organic Compounds (UG/KG)															
1,1-Biphenyl	NA	NA	360 U	390 U	NA	370 U	380 U	420 U	340 U	350 U	390 U	370 U	390 U	380 U	380 U
2,2'-Oxybis(1-chloropropane)	NA	NA	360 U	390 U	NA	370 U	380 U	420 U	340 U	350 U	390 U	370 U	390 U	380 U	380 U
2,4,5-Trichlorophenol	NA	NA	900 U	980 U	NA	930 U	940 U	1,100 U	860 U	880 U	980 U	930 U	970 U	970 U	960 U
2,4,6-Trichlorophenol	NA	NA	360 U	390 U	NA	370 U	380 U	420 U	340 U	350 U	390 U	370 U	390 U	380 U	380 U
2,4-Dichlorophenol	NA	NA	360 U	390 U	NA	370 U	380 U	420 U	340 U	350 U	390 U	370 U	390 U	380 U	380 U
2,4-Dimethylphenol	NA	NA	360 U	390 U	NA	370 U	380 U	420 U	340 U	350 U	390 U	370 U	390 U	380 U	380 U
2,4-Dinitrophenol	NA	NA	900 UJ	980 UJ	NA	930 UJ	940 UJ	1,100 UJ	860 UJ	880 UJ	980 UJ	930 UJ	970 R	970 R	960 R
2,4-Dinitrotoluene	NA	NA	360 U	390 U	NA	370 U	380 U	420 U	340 U	350 U	390 U	370 U	390 U	380 U	380 U
2,6-Dinitrotoluene	NA	NA	360 U	390 U	NA	370 U	380 U	420 U	340 U	350 U	390 U	370 U	390 U	380 U	380 U
2-Chloronaphthalene	NA	NA	360 U	390 U	NA	370 U	380 U	420 U	340 U	350 U	390 U	370 U	390 U	380 U	380 U
2-Chlorophenol	NA	NA	360 U	390 U	NA	370 U	380 U	420 U	340 U	350 U	390 U	370 U	390 U	380 U	380 U
2-Methylnaphthalene	NA	NA	360 U	390 U	NA	370 U	380 U	420 U	340 U	350 U	390 U	370 U	390 U	380 U	380 U
2-Methylphenol	NA	NA	360 U	390 U	NA	370 U	380 U	420 U	340 U	350 U	390 U	370 U	390 U	380 U	380 U
2-Nitroaniline	NA	NA	900 U	980 U	NA	930 U	940 U	1,100 U	860 U	880 U	980 U	930 U	970 U	970 U	960 U
2-Nitrophenol	NA	NA	360 U	390 U	NA	370 U	380 U	420 U	340 U	350 U	390 U	370 U	390 U	380 U	380 U
3,3'-Dichlorobenzidine	NA	NA	360 U	390 UJ	NA	370 UJ	380 U	420 U	340 U	350 U	390 UJ	370 UJ	390 UJ	380 U	380 UJ
3-Nitroaniline	NA	NA	900 U	980 U	NA	930 U	940 U	1,100 U	860 U	880 U	980 U	930 U	970 U	970 U	960 U
4,6-Dinitro-2-methylphenol	NA	NA	900 U	980 UJ	NA	930 UJ	940 UJ	1,100 UJ	860 UJ	880 UJ	980 UJ	930 UJ	970 UJ	970 UJ	960 UJ
4-Bromophenyl-phenylether	NA	NA	360 U	390 U	NA	370 U	380 U	420 U	340 U	350 U	390 U	370 U	390 U	380 U	380 U
4-Chloro-3-methylphenol	NA	NA	360 U	390 U	NA	370 U	380 U	420 U	340 U	350 U	390 U	370 U	390 U	380 U	380 U
4-Chloroaniline	NA	NA	360 U	390 U	NA	370 U	380 U	420 U	340 U	350 U	390 U	370 U	390 UJ	380 U	380 U
4-Chlorophenyl-phenylether	NA	NA	360 U	390 U	NA	370 U	380 U	420 U	340 U	350 U	390 U	370 U	390 U	380 U	380 U
4-Methylphenol	NA	NA	360 U	390 U	NA	370 U	380 U	420 U	340 U	350 U	390 U	370 U	390 U	380 U	380 U
4-Nitroaniline	NA	NA	900 UJ	980 UJ	NA	930 UJ	940 U	1,100 U	860 U	880 U	980 UJ	930 UJ	970 UJ	970 U	960 UJ
4-Nitrophenol	NA	NA	900 U	980 U	NA	930 U	940 U	1,100 U	860 U	880 U	980 U	930 U	970 UJ	970 U	960 UJ
Acenaphthene	NA	NA	360 U	390 U	NA	370 U	380 U	420 U	340 U	350 U	390 U	370 U	390 U	380 U	380 U
Acenaphthylene	NA	NA	360 U	390 U	NA	370 U	380 U	420 U	340 U	350 U	390 U	370 U	390 U	380 U	380 U
Acetophenone	NA	NA	360 U	390 U	NA	370 U	380 U	420 U	340 U	350 U	390 U	370 U	390 U	380 U	380 U
Anthracene	NA	NA	360 U	390 U	NA	370 U	380 U	420 U	340 U	350 U	390 U	370 U	390 U	380 U	380 U
Atrazine	NA	NA	360 U	390 U	NA	370 U	380 U	420 U	340 U	350 U	390 U	370 U	390 U	380 U	380 U
Benzaldehyde	NA	NA	360 UJ	390 U	NA	370 U	380 U	420 U	340 U	350 U	390 U	370 U	390 U	380 U	380 U
Benzo(a)anthracene	NA	NA	360 U	390 U	NA	370 U	380 U	420 U	340 U	350 U	390 U	370 U	390 U	380 U	380 U
Benzo(a)pyrene	NA	NA	360 U	390 U	NA	370 U	380 U	420 U	340 U	350 U	390 U	370 U	390 U	380 U	380 U
Benzo(b)fluoranthene	NA	NA	360 U	390 U	NA	370 U	380 U	420 U	340 U	350 U	390 U	370 U	390 U	380 U	380 U
Benzo(g,h,i)perylene	NA	NA	360 U	390 U	NA	370 U	380 U	420 U	340 U	350 U	390 U	370 U	390 U	380 U	380 U
Benzo(k)fluoranthene	NA	NA	360 U	390 U	NA	370 U	380 U	420 U	340 U	350 U	390 U	370 U	390 U	380 U	380 U
Butylbenzylphthalate	NA	NA	360 U	390 U	NA	370 U	380 U	420 U	340 U	350 U	390 U	370 U	390 U	380 U	380 U
Caprolactam	NA	NA	360 U	390 U	NA	39 J	380 U	420 U	340 U	350 U	390 U	370 U	390 U	380 U	380 U
Carbazole	NA	NA	360 U	390 U	NA	370 U	380 U	420 U	340 U	350 U	390 U	370 U	390 U	380 U	380 U
Chrysene	NA	NA	360 U	390 U	NA	370 U	380 U	420 U	340 U	350 U	390 U	370 U	390 U	380 U	380 U
Di-n-butylphthalate	NA	NA	42 J	54 J	NA	44 J	43 J	58 J	52 J	60 J	50 J	61 J	390 U	380 U	380 U
Di-n-octylphthalate	NA	NA	360 U	390 UJ	NA	370 UJ	380 U	420 U	340 U	350 U	390 UJ	370 UJ	390 U	380 U	380 U
Dibenz(a,h)anthracene	NA	NA	360 U	390 U	NA	370 U	380 U	420 U	340 U	350 U	390 U	370 U	390 U	380 U	380 U
Dibenzofuran	NA	NA	360 U	390 U	NA	370 U	380 U	420 U	340 U	350 U	390 U	370 U	390 U	380 U	380 U
Diethylphthalate	NA	NA	360 U	390 U	NA	370 U	380 U	420 U	340 U	350 U	390 U	370 U	390 U	380 U	380 U
Dimethyl phthalate	NA	NA	360 U	390 U	NA	370 U	380 U	420 U	340 U	350 U	390 U	370 U	390 U	380 U	380 U
Fluoranthene	NA	NA	360 U	390 U	NA	370 U	380 U	420 U	340 U	350 U	390 U	370 U	390 U	380 U	380 U
Fluorene	NA	NA	360 U	390 U	NA	370 U	380 U	420 U	340 U	350 U	390 U	370 U	390 U	380 U	380 U
Hexachlorobenzene	NA	NA	360 U	390 U	NA	370 U	380 U	420 U	340 U	350 U	390 U	370 U	390 U	380 U	380 U
Hexachlorobutadiene	NA	NA	360 U	390 U	NA	370 U	380 U	420 U	340 U	350 U	390 U	370 U	390 U	380 U	380 U
Hexachlorocyclopentadiene	NA	NA	360 UJ	390 U	NA	370 U	380 U	420 U	340 U	350 U	390 U	370 U	390 R	380 U	380 R
Hexachloroethane	NA	NA	360 U	390 U	NA	370 U	380 U	420 U	340 U	350 U	390 U	370 U	390 U	380 U	380 U
Indeno(1,2,3-cd)pyrene	NA	NA	360 U	390 U	NA	370 U	380 U	420 U	340 U	350 U	390 U	370 U	390 U	380 U	380 U
Isophorone	NA	NA	360 U	390 U	NA	370 U	380 U	420 U	340 U	350 U	390 U	370 U	390 U	380 U	380 U
Naphthalene	NA	NA	360 U	390 U	NA	370 U	380 U	420 U	340 U	350 U	390 U	370 U	390 U	380 U	380 U
Nitrobenzene	NA	NA	360 U	390 U	NA	370 U	380 U	420 U	340 U	350 U	390 U	370 U	390 U	380 U	380 U
Pentachlorophenol	NA	NA	900 U	980 U	NA	930 U	940 U	1,100 U	860 U	880 U	980 U	930 U	970 U	970 U	960 U
Phenanthrene	NA	NA	360 U	390 U	NA	370 U	380 U	420 U	340 U	350 U	390 U	370 U	390 U	380 U	380 U
Phenol	NA	NA	360 U	390 U	NA	370 U	380 U	420 U	340 U	350 U	390 U	370 U	390 U	380 U	380 U
Pyrene	NA	NA	360 U	390 U	NA	370 U	380 U	420 U	340 U	350 U	390 U	370 U	390 U	380 U	380 U
bis(2-Chloroethoxy)methane	NA	NA	360 U	390 U	NA	370 U	380 U	420 U	340 U	350 U	390 U	370 U	390 U	380 U	380 U
bis(2-Chloroethyl)ether	NA	NA	360 U	390 U	NA	370 U	380 U	420 U	340 U	350 U	390 U	370 U	390 U	380 U	380 U
bis(2-Ethylhexyl)phthalate	NA	NA	140 J	140 J	NA	130 J	160 J	430	210 J	300 J	86 J	170 J	73 J	47 U	66 U
n-Nitroso-di-n-propylamine	NA	NA	360 UJ	390 U	NA	370 U	380 U	420 U	340 U	350 U	390 U	370 U	390 U	380 U	380 U
n-Nitrosodiphenylamine	NA	NA	360 U	390 U	NA	370 U	380 U	420 U	340 U	350 U	390 U	370 U	390 U	380 U	380 U

Station ID	IR95B-IS107	IR95B-IS109		IR95B-IS111	IR95B-IS113	IR95B-IS114	IR95B-IS115		IR95B-IS116		IR95B-IS117		IR95B-IS119	IR95B-IS121	IR95B-IS123
Sample ID	IR95B-IS107-3-4-06D-2	IR95B-IS109-3-4-06D-2	IR95B-IS109D-3-4-06D-2	IR95B-IS111-3-4-06D-2	IR95B-IS113-3-4-06D-2	IR95B-IS114-3-4-06D-1	IR95B-IS115-3-4-06D-1	IR95B-IS115-3-4-06D-2	IR95B-IS116-3-4-06D-1	IR95B-IS116D-3-4-06D-1	IR95B-IS117-3-4-06D-2	IR95B-IS117D-3-4-06D-2	IR95B-IS119-3-4-06D-2	IR95B-IS121-3-4-06D-2	IR95B-IS123-3-4-06D-2
Sample Date	10/05/06	10/05/06	10/05/06	10/05/06	10/05/06	10/03/06	10/03/06	10/05/06	10/03/06	10/03/06	10/05/06	10/05/06	10/05/06	10/05/06	10/05/06
Chemical Name															
Semi-volatile Organic Compounds (UG/KG)															
1,1-Biphenyl	380 U	400 U	400 U	380 U	380 U	NA	NA	380 U	NA	NA	380 U	380 U	380 U	390 U	390 U
2,2'-Oxybis(1-chloropropane)	380 U	400 U	400 U	380 U	380 U	NA	NA	380 U	NA	NA	380 U	380 U	380 U	390 U	390 U
2,4,5-Trichlorophenol	970 U	1,000 U	1,000 U	950 U	950 U	NA	NA	960 U	NA	NA	940 U	950 U	940 U	970 U	980 U
2,4,6-Trichlorophenol	380 U	400 U	400 U	380 U	380 U	NA	NA	380 U	NA	NA	380 U	380 U	380 U	390 U	390 U
2,4-Dichlorophenol	380 U	400 U	400 U	380 U	380 U	NA	NA	380 U	NA	NA	380 U	380 U	380 U	390 U	390 U
2,4-Dimethylphenol	380 U	400 U	400 U	380 U	380 U	NA	NA	380 U	NA	NA	380 U	380 U	380 U	390 U	390 U
2,4-Dinitrophenol	970 R	1,000 UJ	1,000 UJ	950 R	950 R	NA	NA	960 R	NA	NA	940 R	950 R	940 R	970 R	980 R
2,4-Dinitrotoluene	380 U	400 U	400 U	380 U	380 U	NA	NA	380 U	NA	NA	380 U	380 U	380 U	390 U	390 U
2,6-Dinitrotoluene	380 U	400 U	400 U	380 U	380 U	NA	NA	380 U	NA	NA	380 U	380 U	380 U	390 U	390 U
2-Chloronaphthalene	380 U	400 U	400 U	380 U	380 U	NA	NA	380 U	NA	NA	380 U	380 U	380 U	390 U	390 U
2-Chlorophenol	380 U	400 U	400 U	380 U	380 U	NA	NA	380 U	NA	NA	380 U	380 U	380 U	390 U	390 U
2-Methylnaphthalene	380 U	400 U	400 U	380 U	380 U	NA	NA	380 U	NA	NA	380 U	380 U	380 U	390 U	390 U
2-Methylphenol	380 U	400 U	400 U	380 U	380 U	NA	NA	380 U	NA	NA	380 U	380 U	380 U	390 U	390 U
2-Nitroaniline	970 U	1,000 U	1,000 U	950 U	950 U	NA	NA	960 U	NA	NA	940 U	950 U	940 U	970 U	980 U
2-Nitrophenol	380 U	400 U	400 U	380 U	380 U	NA	NA	380 U	NA	NA	380 U	380 U	380 U	390 U	390 U
3,3'-Dichlorobenzidine	380 U	400 U	400 U	380 U	380 U	NA	NA	380 U	NA	NA	380 U	380 U	380 U	390 U	390 U
3-Nitroaniline	970 U	1,000 U	1,000 U	950 U	950 U	NA	NA	960 U	NA	NA	940 U	950 U	940 U	970 U	980 U
4,6-Dinitro-2-methylphenol	970 UJ	1,000 U	1,000 U	950 U	950 U	NA	NA	960 U	NA	NA	940 U	950 UJ	940 UJ	970 UJ	980 UJ
4-Bromophenyl-phenylether	380 U	400 U	400 U	380 U	380 U	NA	NA	380 U	NA	NA	380 U	380 U	380 U	390 U	390 U
4-Chloro-3-methylphenol	380 U	400 U	400 U	380 U	380 U	NA	NA	380 U	NA	NA	380 U	380 U	380 U	390 U	390 U
4-Chloroaniline	380 U	400 U	400 U	380 U	380 U	NA	NA	380 U	NA	NA	380 U	380 U	380 U	390 U	390 U
4-Chlorophenyl-phenylether	380 U	400 U	400 U	380 U	380 U	NA	NA	380 U	NA	NA	380 U	380 U	380 U	390 U	390 U
4-Methylphenol	380 U	400 U	400 U	380 U	380 U	NA	NA	380 U	NA	NA	380 U	380 U	380 U	390 U	390 U
4-Nitroaniline	970 U	1,000 UJ	1,000 UJ	950 U	950 U	NA	NA	960 U	NA	NA	940 U	950 U	940 U	970 U	980 U
4-Nitrophenol	970 U	1,000 U	1,000 U	950 U	950 U	NA	NA	960 U	NA	NA	940 U	950 U	940 U	970 U	980 U
Acenaphthene	380 U	400 U	400 U	380 U	380 U	NA	NA	380 U	NA	NA	380 U	380 U	380 U	390 U	390 U
Acenaphthylene	380 U	400 U	400 U	380 U	380 U	NA	NA	380 U	NA	NA	380 U	380 U	380 U	390 U	390 U
Acetophenone	380 U	400 U	400 U	380 U	380 U	NA	NA	380 U	NA	NA	380 U	380 U	380 U	390 U	390 U
Anthracene	380 U	400 U	400 U	380 U	380 U	NA	NA	380 U	NA	NA	380 U	380 U	380 U	390 U	390 U
Atrazine	380 U	400 U	400 U	380 U	380 U	NA	NA	380 U	NA	NA	380 U	380 U	380 U	390 U	390 U
Benzaldehyde	380 U	400 UJ	400 UJ	380 UJ	380 UJ	NA	NA	380 UJ	NA	NA	380 UJ	380 U	380 U	390 U	390 U
Benzo(a)anthracene	380 U	400 U	400 U	380 U	380 U	NA	NA	380 U	NA	NA	380 U	380 U	380 U	390 U	390 U
Benzo(a)pyrene	380 U	400 U	400 U	380 U	380 U	NA	NA	380 U	NA	NA	380 U	380 U	380 U	390 U	390 U
Benzo(b)fluoranthene	380 U	400 U	400 U	380 U	380 U	NA	NA	380 U	NA	NA	380 U	380 U	380 U	390 U	390 U
Benzo(g,h,i)perylene	380 U	400 U	400 U	380 U	380 U	NA	NA	380 U	NA	NA	380 U	380 U	380 U	390 U	390 U
Benzo(k)fluoranthene	380 U	400 U	400 U	380 U	380 U	NA	NA	380 U	NA	NA	380 U	380 U	380 U	390 U	390 U
Butylbenzylphthalate	380 U	400 U	400 U	380 U	380 U	NA	NA	380 U	NA	NA	380 U	380 U	380 U	390 U	390 U
Caprolactam	380 U	400 U	400 U	380 U	380 U	NA	NA	380 U	NA	NA	380 U	380 U	380 U	390 U	390 U
Carbazole	380 U	400 U	400 U	380 U	380 U	NA	NA	380 U	NA	NA	380 U	380 U	380 U	390 U	390 U
Chrysene	380 U	400 U	400 U	380 U	380 U	NA	NA	380 U	NA	NA	380 U	380 U	380 U	390 U	390 U
Di-n-butylphthalate	380 U	400 U	400 U	62 J	58 J	NA	NA	72 J	NA	NA	61 J	73 J	44 J	390 U	390 U
Di-n-octylphthalate	380 U	400 U	400 U	380 U	380 U	NA	NA	380 U	NA	NA	380 U	380 U	380 U	390 U	390 U
Dibenz(a,h)anthracene	380 U	400 U	400 U	380 U	380 U	NA	NA	380 U	NA	NA	380 U	380 U	380 U	390 U	390 U
Dibenzofuran	380 U	400 U	400 U	380 U	380 U	NA	NA	380 U	NA	NA	380 U	380 U	380 U	390 U	390 U
Diethylphthalate	380 U	400 U	400 U	380 U	380 U	NA	NA	380 U	NA	NA	380 U	380 U	380 U	390 U	390 U
Dimethyl phthalate	380 U	400 U	400 U	380 U	380 U	NA	NA	380 U	NA	NA	380 U	380 U	380 U	390 U	390 U
Fluoranthene	380 U	400 U	400 U	380 U	380 U	NA	NA	380 U	NA	NA	380 U	380 U	380 U	390 U	390 U
Fluorene	380 U	400 U	400 U	380 U	380 U	NA	NA	380 U	NA	NA	380 U	380 U	380 U	390 U	390 U
Hexachlorobenzene	380 U	400 U	400 U	380 U	380 U	NA	NA	380 U	NA	NA	380 U	380 U	380 U	390 U	390 U
Hexachlorobutadiene	380 U	400 U	400 U	380 U	380 U	NA	NA	380 U	NA	NA	380 U	380 U	380 U	390 U	390 U
Hexachlorocyclopentadiene	380 U	400 UJ	400 UJ	380 U	380 U	NA	NA	380 U	NA	NA	380 U	380 U	380 U	390 U	390 U
Hexachloroethane	380 U	400 U	400 U	380 U	380 U	NA	NA	380 U	NA	NA	380 U	380 U	380 U	390 U	390 U
Indeno(1,2,3-cd)pyrene	380 U	400 U	400 U	380 U	380 U	NA	NA	380 U	NA	NA	380 U	380 U	380 U	390 U	390 U
Isophorone	380 U	400 U	400 U	380 U	380 U	NA	NA	380 U	NA	NA	380 U	380 U	380 U	390 U	390 U
Naphthalene	380 U	400 U	400 U	380 U	380 U	NA	NA	380 U	NA	NA	380 U	380 U	380 U	390 U	390 U
Nitrobenzene	380 U	400 U	400 U	380 U	380 U	NA	NA	380 U	NA	NA	380 U	380 U	380 U	390 U	390 U
Pentachlorophenol	970 U	1,000 U	1,000 U	950 U	950 U	NA	NA	960 U	NA	NA	940 U	950 U	940 U	970 U	980 U
Phenanthrene	380 U	400 U	400 U	380 U	380 U	NA	NA	380 U	NA	NA	380 U	380 U	380 U	390 U	390 U
Phenol	380 U	400 U	400 U	380 U	380 U	NA	NA	380 U	NA	NA	380 U	380 U	380 U	390 U	390 U
Pyrene	380 U	400 U	400 U	380 U	380 U	NA	NA	380 U	NA	NA	380 U	380 U	380 U	390 U	390 U
bis(2-Chloroethoxy)methane	380 U	400 U	400 U	380 U	380 U	NA	NA	380 U	NA	NA	380 U	380 U	380 U	390 U	390 U
bis(2-Chloroethyl)ether	380 U	400 U	400 U	380 U	380 U	NA	NA	380 U	NA	NA	380 U	380 U	380 U	390 U	390 U
bis(2-Ethylhexyl)phthalate	61 U	230 U	170 U	110 U	100 U	NA	NA	400 U	NA	NA	300 U	170 U	130 U	120 U	110 U
n-Nitroso-di-n-propylamine	380 U	400 UJ	400 UJ	380 U	380 U	NA	NA	380 U	NA	NA	380 U	380 U	380 U	390 U	390 U
n-Nitrosodiphenylamine	380 U	400 U	400 U	380 U	380 U	NA	NA	380 U	NA	NA	380 U	380 U	380 U	390 U	390 U

Station ID	IR95B-IS125	IR95B-IS127		IR95B-IS129	IR95C-IS100	IR95C-IS101		IR95C-IS102	IR95C-IS103	IR95C-IS105	IR95C-IS107	IR95C-IS109	IR95C-IS111	IR95C-IS113	
Sample ID	IR95B-IS125-3-4-06D-2	IR95B-IS127-3-4-06D-2	IR95B-IS127D-3-4-06D-2	IR95B-IS129-3-4-06D-2	IR95C-IS100-3-4-06D-1	IR95C-IS101-3-4-06D-1	IR95C-IS101-3-4-06D-2	IR95C-IS102-3-4-06D-1	IR95C-IS103-3-4-06D-2	IR95C-IS105-3-4-06D-2	IR95C-IS107-3-4-06D-2	IR95C-IS109-3-4-06D-2	IR95C-IS111-3-4-06D-2	IR95C-IS113-3-4-06D-2	IR95C-IS113D-3-4-06D-2
Sample Date	10/05/06	10/05/06	10/05/06	10/05/06	10/03/06	10/03/06	10/03/06	10/03/06	10/03/06	10/03/06	10/03/06	10/03/06	10/03/06	10/03/06	10/03/06
Chemical Name															
Semi-volatile Organic Compounds (UG/KG)															
1,1-Biphenyl	380 U	380 U	390 U	380 U	NA	NA	380 U	NA	360 U	370 U	360 U	370 U	380 U	360 U	360 U
2,2'-Oxybis(1-chloropropane)	380 U	380 U	390 U	380 U	NA	NA	380 U	NA	360 U	370 U	360 U	370 U	380 U	360 U	360 U
2,4,5-Trichlorophenol	940 U	960 U	970 U	940 U	NA	NA	940 U	NA	910 U	930 U	900 U	930 U	940 U	900 U	900 U
2,4,6-Trichlorophenol	380 U	380 U	390 U	380 U	NA	NA	380 U	NA	360 U	370 U	360 U	370 U	380 U	360 U	360 U
2,4-Dichlorophenol	380 U	380 U	390 U	380 U	NA	NA	380 U	NA	360 U	370 U	360 U	370 U	380 U	360 U	360 U
2,4-Dimethylphenol	380 U	380 U	390 U	380 U	NA	NA	380 U	NA	360 U	370 U	360 U	370 U	380 UJ	360 U	360 U
2,4-Dinitrophenol	940 UJ	960 R	970 R	940 R	NA	NA	940 UJ	NA	910 UJ	930 UJ	900 UJ	930 UJ	940 R	900 UJ	900 UJ
2,4-Dinitrotoluene	380 U	380 U	390 U	380 U	NA	NA	380 U	NA	360 U	370 U	360 U	370 U	380 U	360 U	360 U
2,6-Dinitrotoluene	380 U	380 U	390 U	380 U	NA	NA	380 U	NA	360 U	370 U	360 U	370 U	380 U	360 U	360 U
2-Chloronaphthalene	380 U	380 U	390 U	380 U	NA	NA	380 U	NA	360 U	370 U	360 U	370 U	380 U	360 U	360 U
2-Chlorophenol	380 U	380 U	390 U	380 U	NA	NA	380 U	NA	360 U	370 U	360 U	370 U	380 U	360 U	360 U
2-Methylnaphthalene	380 U	380 U	390 U	380 U	NA	NA	380 U	NA	360 U	370 U	360 U	370 U	380 U	360 U	360 U
2-Methylphenol	380 U	380 U	390 U	380 U	NA	NA	380 U	NA	360 U	370 U	360 U	370 U	380 U	360 U	360 U
2-Nitroaniline	940 U	960 U	970 U	940 U	NA	NA	940 U	NA	910 U	930 U	900 U	930 U	940 U	900 U	900 U
2-Nitrophenol	380 U	380 U	390 U	380 U	NA	NA	380 U	NA	360 U	370 U	360 U	370 U	380 U	360 U	360 U
3,3'-Dichlorobenzidine	380 UJ	380 U	390 UJ	380 U	NA	NA	380 UJ	NA	360 UJ	370 UJ	360 UJ	370 UJ	380 U	360 UJ	360 UJ
3-Nitroaniline	940 U	960 U	970 U	940 U	NA	NA	940 U	NA	910 U	930 U	900 U	930 U	940 U	900 U	900 U
4,6-Dinitro-2-methylphenol	940 U	960 UJ	970 UJ	940 UJ	NA	NA	940 U	NA	910 U	930 U	900 U	930 U	940 UJ	900 U	900 U
4-Bromophenyl-phenylether	380 U	380 U	390 U	380 U	NA	NA	380 U	NA	360 U	370 U	360 U	370 U	380 U	360 U	360 U
4-Chloro-3-methylphenol	380 U	380 U	390 U	380 U	NA	NA	380 U	NA	360 U	370 U	360 U	370 U	380 U	360 U	360 U
4-Chloroaniline	380 U	380 U	390 U	380 U	NA	NA	380 UJ	NA	360 UJ	370 UJ	360 UJ	370 UJ	380 UJ	360 UJ	360 UJ
4-Chlorophenyl-phenylether	380 U	380 U	390 U	380 U	NA	NA	380 U	NA	360 U	370 U	360 U	370 U	380 U	360 U	360 U
4-Methylphenol	380 U	380 U	390 U	380 U	NA	NA	380 U	NA	360 U	370 U	360 U	370 U	380 U	360 U	360 U
4-Nitroaniline	940 U	960 U	970 UJ	940 U	NA	NA	940 UJ	NA	910 UJ	930 UJ	900 UJ	930 UJ	940 U	900 UJ	900 UJ
4-Nitrophenol	940 UJ	960 U	970 UJ	940 U	NA	NA	940 UJ	NA	910 UJ	930 UJ	900 UJ	930 UJ	940 U	900 UJ	900 UJ
Acenaphthene	380 U	380 U	390 U	380 U	NA	NA	380 U	NA	360 U	370 U	360 U	370 U	380 U	360 U	360 U
Acenaphthylene	380 U	380 U	390 U	380 U	NA	NA	380 U	NA	360 U	370 U	360 U	370 U	380 U	360 U	360 U
Acetophenone	380 U	380 U	390 U	380 U	NA	NA	380 U	NA	360 U	370 U	360 U	370 U	380 U	360 U	360 U
Anthracene	380 U	380 U	390 U	380 U	NA	NA	380 U	NA	360 U	370 U	360 U	370 U	380 U	360 U	360 U
Atrazine	380 UJ	380 U	390 U	380 U	NA	NA	380 UJ	NA	360 UJ	370 UJ	360 UJ	370 UJ	380 U	360 UJ	360 UJ
Benzaldehyde	380 U	380 U	390 U	380 U	NA	NA	380 U	NA	360 U	370 U	360 U	370 U	380 U	360 U	360 U
Benzo(a)anthracene	380 U	380 U	390 U	380 U	NA	NA	380 U	NA	360 U	370 U	360 U	370 U	380 U	360 U	360 U
Benzo(a)pyrene	380 U	380 U	390 U	380 U	NA	NA	380 U	NA	360 U	370 U	360 U	370 U	380 U	360 U	360 U
Benzo(b)fluoranthene	380 U	380 U	390 U	380 U	NA	NA	380 U	NA	360 U	370 U	360 U	370 U	380 U	360 U	360 U
Benzo(g,h,i)perylene	380 U	380 U	390 U	380 U	NA	NA	380 U	NA	360 U	370 U	360 U	370 U	380 U	360 U	360 U
Benzo(k)fluoranthene	380 U	380 U	390 U	380 U	NA	NA	380 U	NA	360 U	370 U	360 U	370 U	380 U	360 U	360 U
Butylbenzylphthalate	380 U	380 U	390 U	380 U	NA	NA	380 U	NA	360 U	370 U	360 U	370 U	380 U	360 U	360 U
Caprolactam	380 U	380 U	390 U	380 U	NA	NA	380 U	NA	360 U	370 U	360 U	370 U	380 UJ	360 U	360 U
Carbazole	380 U	380 U	390 U	380 U	NA	NA	380 U	NA	360 U	370 U	360 U	370 U	380 U	360 U	360 U
Chrysene	380 U	380 U	390 U	380 U	NA	NA	380 U	NA	360 U	370 U	360 U	370 U	380 U	360 U	360 U
Di-n-butylphthalate	62 J	380 U	54 J	43 J	NA	NA	380 U	NA	360 U	370 U	360 U	370 U	380 U	360 U	360 U
Di-n-octylphthalate	380 U	380 U	390 U	380 U	NA	NA	380 U	NA	360 U	370 U	360 U	370 U	380 UJ	360 U	360 U
Dibenz(a,h)anthracene	380 U	380 U	390 U	380 U	NA	NA	380 U	NA	360 U	370 U	360 U	370 U	380 U	360 U	360 U
Dibenzofuran	380 U	380 U	390 U	380 U	NA	NA	380 U	NA	360 U	370 U	360 U	370 U	380 U	360 U	360 U
Diethylphthalate	380 U	380 U	390 U	380 U	NA	NA	380 U	NA	360 U	370 U	360 U	370 U	380 U	360 U	360 U
Dimethyl phthalate	380 U	380 U	390 U	380 U	NA	NA	380 U	NA	360 U	370 U	360 U	370 U	380 U	360 U	360 U
Fluoranthene	380 U	380 U	390 U	380 U	NA	NA	380 U	NA	360 U	370 U	360 U	370 U	380 U	360 U	360 U
Fluorene	380 U	380 U	390 U	380 U	NA	NA	380 U	NA	360 U	370 U	360 U	370 U	380 U	360 U	360 U
Hexachlorobenzene	380 U	380 U	390 U	380 U	NA	NA	380 U	NA	360 U	370 U	360 U	370 U	380 U	360 U	360 U
Hexachlorobutadiene	380 U	380 U	390 U	380 U	NA	NA	380 U	NA	360 U	370 U	360 U	370 U	380 U	360 U	360 U
Hexachlorocyclopentadiene	380 UJ	380 U	390 R	380 U	NA	NA	380 UJ	NA	360 UJ	370 UJ	360 UJ	370 UJ	380 UJ	360 UJ	360 UJ
Hexachloroethane	380 U	380 U	390 U	380 U	NA	NA	380 U	NA	360 U	370 U	360 U	370 U	380 U	360 U	360 U
Indeno(1,2,3-cd)pyrene	380 U	380 U	390 U	380 U	NA	NA	380 U	NA	360 U	370 U	360 U	370 U	380 U	360 U	360 U
Isophorone	380 U	380 U	390 U	380 U	NA	NA	380 U	NA	360 U	370 U	360 U	370 U	380 U	360 U	360 U
Naphthalene	380 U	380 U	390 U	380 U	NA	NA	380 U	NA	360 U	370 U	360 U	370 U	380 U	360 U	360 U
Nitrobenzene	380 U	380 U	390 U	380 U	NA	NA	380 U	NA	360 U	370 U	360 U	370 U	380 U	360 U	360 U
Pentachlorophenol	940 U	960 U	970 U	940 U	NA	NA	940 U	NA	910 U	930 U	900 U	930 U	940 UJ	900 U	900 U
Phenanthrene	380 U	380 U	390 U	380 U	NA	NA	380 U	NA	360 U	370 U	360 U	370 U	380 U	360 U	360 U
Phenol	380 U	380 U	390 U	380 U	NA	NA	380 U	NA	360 U	370 U	360 U	370 U	380 U	360 U	360 U
Pyrene	380 U	380 U	390 U	380 U	NA	NA	380 U	NA	360 U	370 U	360 U	370 U	380 U	360 U	360 U
bis(2-Chloroethoxy)methane	380 U	380 U	390 U	380 U	NA	NA	380 U	NA	360 U	370 U	360 U	370 U	380 U	360 U	360 U
bis(2-Chloroethyl)ether	380 U	380 U	390 U	380 U	NA	NA	380 U	NA	360 U	370 U	360 U	370 U	380 U	360 U	360 U
bis(2-Ethylhexyl)phthalate	200 U	120 U	420	110 U	NA	NA	50 J	NA	44 J	57 J	39 J	44 J	99 J	43 J	39 J
n-Nitroso-di-n-propylamine	380 U	380 U	390 U	380 U	NA	NA	380 U	NA	360 U	370 U	360 U	370 U	380 U	360 U	360 U
n-Nitrosodiphenylamine	380 U	380 U	390 U	380 U	NA	NA	380 U	NA	360 U	370 U	360 U	370 U	380 U	360 U	360 U

Station ID	IR95C-IS115	IR95C-IS117	IR95C-IS119	IR95C-IS121	IR95C-IS123		IR95C-IS125	IR95C-IS127
Sample ID	IR95C-IS115-3-4-06D-2	IR95C-IS117-3-4-06D-2	IR95C-IS119-3-4-06D-2	IR95C-IS121-3-4-06D-2	IR95C-IS123-3-4-06D-2	IR95C-IS123D-3-4-06D-2	IR95C-IS125-3-4-06D-2	IR95C-IS127-3-4-06D-2
Sample Date	10/03/06	10/03/06	10/03/06	10/03/06	10/03/06	10/03/06	10/03/06	10/03/06
Chemical Name								
Semi-volatile Organic Compounds (UG/KG)								
1,1-Biphenyl	380 U	380 U	360 U	360 U	370 U	380 U	360 U	380 U
2,2'-Oxybis(1-chloropropane)	380 U	380 U	360 U	360 U	370 U	380 U	360 U	380 U
2,4,5-Trichlorophenol	970 U	960 U	890 U	910 U	940 U	950 U	920 U	970 U
2,4,6-Trichlorophenol	380 U	380 U	360 U	360 U	370 U	380 U	360 U	380 U
2,4-Dichlorophenol	380 U	380 U	360 U	360 U	370 U	380 U	360 U	380 U
2,4-Dimethylphenol	380 U	380 U	360 U	360 UJ	370 UJ	380 UJ	360 UJ	380 UJ
2,4-Dinitrophenol	970 UJ	960 UJ	890 UJ	910 R	940 R	950 R	920 R	970 R
2,4-Dinitrotoluene	380 U	380 U	360 U	360 U	370 U	380 U	360 U	380 U
2,6-Dinitrotoluene	380 U	380 U	360 U	360 U	370 U	380 U	360 U	380 U
2-Chloronaphthalene	380 U	380 U	360 U	360 U	370 U	380 U	360 U	380 U
2-Chlorophenol	380 U	380 U	360 U	360 U	370 U	380 U	360 U	380 U
2-Methylnaphthalene	380 U	380 U	360 U	360 UJ	370 U	380 U	360 U	380 U
2-Methylphenol	380 U	380 U	360 U	360 U	370 U	380 U	360 U	380 U
2-Nitroaniline	970 U	960 U	890 U	910 U	940 U	950 U	920 U	970 U
2-Nitrophenol	380 U	380 U	360 U	360 U	370 U	380 U	360 U	380 U
3,3'-Dichlorobenzidine	380 U	380 U	360 U	360 UJ	370 UJ	380 UJ	360 UJ	380 U
3-Nitroaniline	970 U	960 U	890 U	910 U	940 U	950 U	920 U	970 U
4,6-Dinitro-2-methylphenol	970 UJ	960 UJ	890 UJ	910 UJ	940 UJ	950 UJ	920 UJ	970 UJ
4-Bromophenyl-phenylether	380 U	380 U	360 U	360 U	370 U	380 U	360 U	380 U
4-Chloro-3-methylphenol	380 U	380 U	360 U	360 U	370 U	380 U	360 U	380 U
4-Chloroaniline	380 UJ	380 UJ	360 UJ	360 UJ	370 UJ	380 UJ	360 UJ	380 UJ
4-Chlorophenyl-phenylether	380 U	380 U	360 U	360 U	370 U	380 U	360 U	380 U
4-Methylphenol	380 U	380 U	360 U	360 U	370 U	380 U	360 U	380 U
4-Nitroaniline	970 U	960 U	890 U	910 U	940 U	950 U	920 U	970 U
4-Nitrophenol	970 U	960 U	890 U	910 U	940 U	950 U	920 U	970 U
Acenaphthene	380 U	380 U	360 U	360 U	370 U	380 U	360 U	380 U
Acenaphthylene	380 U	380 U	360 U	360 U	370 U	380 U	360 U	380 U
Acetophenone	380 U	380 U	360 U	360 U	370 U	380 U	360 U	380 U
Anthracene	380 U	380 U	360 U	360 U	370 U	380 U	360 U	380 U
Atrazine	380 U	380 U	360 U	360 U	370 U	380 U	360 U	380 U
Benzaldehyde	380 UJ	380 UJ	360 UJ	360 U	370 U	380 U	360 U	380 U
Benzo(a)anthracene	380 U	380 U	360 U	360 U	370 U	380 U	360 U	380 U
Benzo(a)pyrene	380 U	380 U	360 U	360 U	370 U	380 U	360 U	380 U
Benzo(b)fluoranthene	380 U	380 U	360 U	360 U	370 U	380 U	360 U	380 U
Benzo(g,h,i)perylene	380 U	380 U	360 U	360 U	370 U	380 U	360 U	380 U
Benzo(k)fluoranthene	380 U	380 U	360 U	360 U	370 U	380 U	360 U	380 U
Butylbenzylphthalate	380 U	380 U	360 U	360 U	370 U	380 U	360 U	380 U
Caprolactam	380 UJ	380 UJ	360 UJ	360 UJ	370 UJ	380 UJ	360 UJ	380 UJ
Carbazole	380 U	380 U	360 U	360 U	370 U	380 U	360 U	380 U
Chrysene	380 U	380 U	360 U	360 U	370 U	380 U	360 U	380 U
Di-n-butylphthalate	56 J	380 U	360 U	360 U	370 U	380 U	360 U	380 U
Di-n-octylphthalate	380 UJ	380 UJ	360 UJ	360 U	370 U	380 U	360 U	380 UJ
Dibenz(a,h)anthracene	380 U	380 U	360 U	360 U	370 U	380 U	360 U	380 U
Dibenzofuran	380 U	380 U	360 U	360 U	370 U	380 U	360 U	380 U
Diethylphthalate	380 U	380 U	360 U	360 U	370 U	380 U	360 U	380 U
Dimethyl phthalate	380 U	380 U	360 U	360 U	370 U	380 U	360 U	380 U
Fluoranthene	380 U	380 U	360 U	360 U	370 U	380 U	360 U	380 U
Fluorene	380 U	380 U	360 U	360 U	370 U	380 U	360 U	380 U
Hexachlorobenzene	380 U	380 U	360 U	360 U	370 U	380 U	360 U	380 U
Hexachlorobutadiene	380 U	380 U	360 U	360 U	370 U	380 U	360 U	380 U
Hexachlorocyclopentadiene	380 UJ	380 UJ	360 UJ	360 U	370 UJ	380 UJ	360 UJ	380 UJ
Hexachloroethane	380 U	380 U	360 U	360 U	370 U	380 U	360 U	380 U
Indeno(1,2,3-cd)pyrene	380 U	380 U	360 U	360 U	370 U	380 U	360 U	380 U
Isophorone	380 U	380 U	360 U	360 U	370 U	380 U	360 U	380 U
Naphthalene	380 U	380 U	360 U	360 U	370 U	380 U	360 U	380 U
Nitrobenzene	380 U	380 U	360 U	360 U	370 U	380 U	360 U	380 U
Pentachlorophenol	970 UJ	960 UJ	890 UJ	910 UJ	940 UJ	950 UJ	920 UJ	970 UJ
Phenanthrene	380 U	380 U	360 U	360 U	370 U	380 U	360 U	380 U
Phenol	380 U	380 U	360 U	360 U	370 U	380 U	360 U	380 U
Pyrene	380 U	380 U	360 U	360 U	370 U	380 U	360 U	380 U
bis(2-Chloroethoxy)methane	380 U	380 U	360 U	360 U	370 U	380 U	360 U	380 U
bis(2-Chloroethyl)ether	380 U	380 U	360 U	360 U	370 U	380 U	360 U	380 U
bis(2-Ethylhexyl)phthalate	120 U	83 J	91 J	100 J	96 J	100 J	96 J	91 J
n-Nitroso-di-n-propylamine	380 U	380 U	360 U	360 U	370 U	380 U	360 U	380 U
n-Nitrosodiphenylamine	380 U	380 U	360 U	360 U	370 U	380 U	360 U	380 U

Site 95 Subsurface Soil Raw Analytical Data
October 2006

Station ID	IR95A-IS100	IR95A-IS101			IR95A-IS102	IR95A-IS103	IR95A-IS115	IR95A-IS117	IR95A-IS119		IR95A-IS121	IR95A-IS123	IR95B-IS101	IR95B-IS103	IR95B-IS105
Sample ID	IR95A-IS100-3-4-06D-1	IR95A-IS101-3-4-06D-1	IR95A-IS101-3-4-06D-2	IR95A-IS101D-3-4-06D-2	IR95A-IS102-3-4-06D-1	IR95A-IS103-3-4-06D-2	IR95A-IS115-3-4-06D-2	IR95A-IS117-3-4-06D-2	IR95A-IS119-3-4-06D-2	IR95A-IS119D-3-4-06D-2	IR95A-IS121-3-4-06D-2	IR95A-IS123-3-4-06D-2	IR95B-IS101-3-4-06D-2	IR95B-IS103-3-4-06D-2	IR95B-IS105-3-4-06D-2
Sample Date	10/03/06	10/03/06	10/04/06	10/04/06	10/03/06	10/04/06	10/04/06	10/04/06	10/04/06	10/04/06	10/04/06	10/04/06	10/05/06	10/05/06	10/05/06
Chemical Name															
Pesticide/Polychlorinated Biphenyls (UG/KG)															
4,4'-DDD	NA	NA	3.6 U	3.9 U	NA	3.7 U	3.7 U	4.2 U	3.4 U	3.5 U	3.9 U	3.7 U	3.9 U	3.9 U	3.8 U
4,4'-DDE	NA	NA	3.6 U	2.5 J	NA	2.8 J	3.7 U	4.2 U	3.4 U	3.5 U	3.9 U	3.7 U	3.9 U	3.9 U	3.8 U
4,4'-DDT	NA	NA	3.6 U	3.9 U	NA	3.7 U	3.7 U	4.2 U	3.4 U	3.5 U	3.9 U	3.7 U	3.9 U	3.9 U	3.8 U
Aldrin	NA	NA	1.9 U	2 U	NA	1.9 U	1.9 U	2.2 U	1.8 U	1.8 U	2 U	1.9 U	2 U	2 U	2 U
Aroclor-1016	NA	NA	36 U	39 U	NA	37 U	37 U	42 U	34 U	35 U	39 U	37 U	39 U	39 U	38 U
Aroclor-1221	NA	NA	73 U	79 U	NA	75 U	76 U	86 U	70 U	71 U	80 U	75 U	79 U	79 U	77 U
Aroclor-1232	NA	NA	36 U	39 U	NA	37 U	37 U	42 U	34 U	35 U	39 U	37 U	39 U	39 U	38 U
Aroclor-1242	NA	NA	36 U	39 U	NA	37 U	37 U	42 U	34 U	35 U	39 U	37 U	39 U	39 U	38 U
Aroclor-1248	NA	NA	36 U	39 U	NA	37 U	37 U	42 U	34 U	35 U	39 U	37 U	39 U	39 U	38 U
Aroclor-1254	NA	NA	36 U	39 U	NA	37 U	37 U	42 U	34 U	35 U	39 U	37 U	39 U	39 U	38 U
Aroclor-1260	NA	NA	36 U	39 U	NA	37 U	37 U	42 U	34 U	35 U	39 U	37 U	39 U	39 U	38 U
Dieldrin	NA	NA	3.6 U	3.9 U	NA	3.7 U	3.7 U	4.2 U	3.4 U	3.5 U	3.9 U	3.7 U	3.9 U	3.9 U	3.8 U
Endosulfan I	NA	NA	1.9 U	2 U	NA	1.9 U	1.9 U	2.2 U	1.8 U	1.8 U	2 U	1.9 U	2 U	2 U	2 U
Endosulfan II	NA	NA	3.6 U	3.9 U	NA	3.7 U	3.7 U	4.2 U	3.4 U	3.5 U	3.9 U	3.7 U	3.9 U	3.9 U	3.8 U
Endosulfan sulfate	NA	NA	3.6 U	3.9 U	NA	3.7 U	3.7 U	4.2 U	3.4 U	3.5 U	3.9 U	3.7 U	3.9 U	3.9 U	3.8 U
Endrin	NA	NA	3.6 U	3.9 U	NA	3.7 U	3.7 U	4.2 U	3.4 U	3.5 U	3.9 U	3.7 U	3.9 U	3.9 U	3.8 U
Endrin aldehyde	NA	NA	3.6 U	3.9 U	NA	3.7 U	3.7 U	4.2 U	3.4 U	3.5 U	3.9 U	3.7 U	3.9 U	3.9 U	3.8 U
Endrin ketone	NA	NA	3.6 U	3.9 U	NA	3.7 U	3.7 U	4.2 U	3.4 U	3.5 U	3.9 U	3.7 U	3.9 U	3.9 U	3.8 U
Heptachlor	NA	NA	1.9 U	2 U	NA	1.9 U	1.9 U	2.2 U	1.8 U	1.8 U	2 U	1.9 U	2 U	2 U	2 U
Heptachlor epoxide	NA	NA	1.9 U	2 U	NA	1.9 U	1.9 U	2.2 U	1.8 U	1.8 U	2 U	1.9 U	2 U	2 U	2 U
Methoxychlor	NA	NA	19 U	20 U	NA	19 U	19 U	22 U	18 U	18 U	20 U	19 U	20 U	20 U	20 U
Toxaphene	NA	NA	190 U	200 U	NA	190 U	190 U	220 U	180 U	180 U	200 U	190 U	200 U	200 U	200 U
alpha-BHC	NA	NA	1.9 U	2 U	NA	1.9 U	1.9 U	2.2 U	1.8 U	1.8 U	2 U	1.9 U	2 U	2 U	2 U
alpha-Chlordane	NA	NA	1.9 U	2 U	NA	1.9 U	1.9 U	2.2 U	1.8 U	1.8 U	2 U	1.9 U	2 U	2 U	2 U
beta-BHC	NA	NA	1.9 U	2 U	NA	1.9 U	1.9 U	2.2 U	1.8 U	1.8 U	2 U	1.9 U	2 U	2 U	2 U
delta-BHC	NA	NA	1.9 U	2 U	NA	1.9 U	1.9 U	2.2 U	1.8 U	1.8 U	2 U	1.9 U	2 U	2 U	2 U
gamma-BHC (Lindane)	NA	NA	1.9 U	2 U	NA	1.9 U	1.9 U	2.2 U	1.8 U	1.8 U	2 U	1.9 U	2 U	2 U	2 U
gamma-Chlordane	NA	NA	1.9 U	2 U	NA	1.9 U	1.9 U	2.2 U	1.8 U	1.8 U	2 U	1.9 U	2 U	2 U	2 U
Total Metals (MG/KG)															
Aluminum	NA	NA	1,610	1,240	NA	4,790	1,390	1,930	481	732	7,870	4,730	12,900 J	13,200	10,200
Antimony	NA	NA	4.7 UJ	0.085 UJ	NA	0.27 UJ	0.099 UJ	5.4 UJ	0.053 UJ	0.059 UJ	0.14 UJ	0.29 UJ	0.39 UJ	0.56 UJ	0.61 UJ
Arsenic	NA	NA	0.14 J-	0.14 J-	NA	0.51 J-	0.19 J	0.83 J	0.14 J	0.24 J	1.3 J-	0.19 J-	3.6 J-	4.7	2
Barium	NA	NA	5.9 J	4.8 J	NA	9.9 J	5.5 J	4.5 J	1.9 J	2.2 J	13.2 J	7 J	13.1 J	16.3	11.9 J
Beryllium	NA	NA	0.027 J	0.03 J	NA	0.075 J	0.03 J	0.039 J	0.019 J	0.021 J	0.094 J	0.067 J	0.13 J	0.16 J	0.13 J
Cadmium	NA	NA	0.38 U	0.42 U	NA	0.38 U	0.4 U	0.45 U	0.35 U	0.36 U	0.43 U	0.38 U	0.41 UJ	0.42 U	0.42 U
Calcium	NA	NA	186 J	126 J	NA	187 J	105 J	51.6 J	44.9 J	66.6 J	308 J	199 J	410 UJ	284 J	742
Chromium	NA	NA	1.8	2.3	NA	7	2.1	3.6	1.6	1.8	9.6	5.3	18.5 J	20.9	15.1
Cobalt	NA	NA	0.13 U	0.16 U	NA	0.3 J	0.19 J	0.2 J	0.075 J	0.082 J	0.58 J	0.28 J	0.45 J	0.58 J	0.45 J
Copper	NA	NA	3.2 U	3.2 U	NA	3.1 U	2.9 U	3.1 U	2.3 U	2.5 U	5.3 U	3.5 U	4.1 U	4.4 U	3.9 U
Iron	NA	NA	996	561	NA	1,910	575	1,480	286	331	3,370	1,030	6,570 J	6,890	3,890
Lead	NA	NA	2.2	2.3	NA	7	2.4	2.9	1.7	2.3	3.6	2.3	7.8 J	7.9 J	6.4 J
Magnesium	NA	NA	51.2 J	54.9 J	NA	150 J	61.8 J	79.4 J	22.7 J	28.3 J	264 J	141 J	584 J	565	562
Manganese	NA	NA	15.8 J	4.4 J	NA	14.5 J	4.4	3.8	1.8	1.8	6.8 J	3.4 J	8.6 J	7.7 J	6.9 J
Mercury	NA	NA	0.1 U	0.099 U	NA	0.094 U	0.094 U	0.11 U	0.086 U	0.097 U	0.099 U	0.09 U	0.098 U	0.11 U	0.093 U
Nickel	NA	NA	0.61 J	0.55 J	NA	1.8 J	0.46 J	0.53 J	0.2 U	0.22 U	2.3 J	0.83 J	1.9 J	1.9 J	1.5 J
Potassium	NA	NA	59.1 U	66.8 U	NA	144 J	61.6 U	101 J	44.9 U	49.1 U	342 J	254 J	747 J	621 J	563 J
Selenium	NA	NA	0.41 U	0.51 U	NA	0.55 U	0.3 U	0.54 U	0.25 U	0.33 U	1.3 U	0.6 U	0.27 U	0.66 U	0.71 U
Silver	NA	NA	0.78 U	0.82 U	NA	0.034 J	0.8 U	0.88 U	0.71 U	0.72 U	0.022 J	0.76 U	0.82 U	0.84 U	0.03 J
Sodium	NA	NA	31.3 U	35.5 J	NA	26.4 U	14 U	17.6 U	9.1 U	9.8 U	24.8 U	22.7 U	163 J	40.6 U	35.9 U
Thallium	NA	NA	0.2 U	0.13 U	NA	0.32 U	0.16 U	0.22 U	0.1 U	0.12 U	0.61 U	0.33 U	0.21 U	0.61 U	0.92 U
Vanadium	NA	NA	2.8 J	2.4 J	NA	6.8	2.2 J	7	2.1 J	2.1 J	11.8	5.6	25.6 J	29.7	19.9
Zinc	NA	NA	2.4 U	3.2 U	NA	12.3	3.1 U	2.3 U	1.8 U	2.3 U	4.8 U	3.9 U	6.9 U	7.5 U	5.6 U

Notes:
U- Analyte not detected
J- Reported value is estimated
J- - Reported value is biased low
UJ- Analyte not detected. Quantiation limit is imprecise
NA- Not analyzed
Shading represents detection

Station ID	IR95B-IS107	IR95B-IS109		IR95B-IS111	IR95B-IS113	IR95B-IS114	IR95B-IS115		IR95B-IS116		IR95B-IS117		IR95B-IS119	IR95B-IS121	IR95B-IS123
Sample ID	IR95B-IS107-3-4-06D-2	IR95B-IS109-3-4-06D-2	IR95B-IS109D-3-4-06D-2	IR95B-IS111-3-4-06D-2	IR95B-IS113-3-4-06D-2	IR95B-IS114-3-4-06D-1	IR95B-IS115-3-4-06D-1	IR95B-IS115-3-4-06D-2	IR95B-IS116-3-4-06D-1	IR95B-IS116D-3-4-06D-1	IR95B-IS117-3-4-06D-2	IR95B-IS117D-3-4-06D-2	IR95B-IS119-3-4-06D-2	IR95B-IS121-3-4-06D-2	IR95B-IS123-3-4-06D-2
Sample Date	10/05/06	10/05/06	10/05/06	10/05/06	10/05/06	10/03/06	10/03/06	10/05/06	10/03/06	10/03/06	10/05/06	10/05/06	10/05/06	10/05/06	10/05/06
Chemical Name															
Pesticide/Polychlorinated Biphenyls (UG/KG)															
4,4'-DDD	3.8 U	4 U	4 U	3.8 U	3.8 U	NA	NA	3.8 U	NA	NA	3.8 U	3.8 U	3.8 U	3.9 U	3.9 U
4,4'-DDE	3.8 U	4 U	4 U	3.8 U	3.8 U	NA	NA	3.8 U	NA	NA	3.8 U	3.8 U	3.8 U	3.9 U	3.9 U
4,4'-DDT	3.8 U	4 U	4 U	3.8 U	3.8 U	NA	NA	3.8 U	NA	NA	3.8 U	3.8 U	3.8 U	3.9 U	3.9 U
Aldrin	2 U	2.1 U	2.1 U	1.9 U	1.9 U	NA	NA	2 U	NA	NA	1.9 U	1.9 U	2 U	2 U	2 U
Aroclor-1016	38 U	40 U	40 U	38 U	38 U	NA	NA	38 U	NA	NA	38 U	38 U	38 U	39 U	39 U
Aroclor-1221	77 U	81 U	81 U	76 U	77 U	NA	NA	78 U	NA	NA	77 U	77 U	77 U	79 U	79 U
Aroclor-1232	38 U	40 U	40 U	38 U	38 U	NA	NA	38 U	NA	NA	38 U	38 U	38 U	39 U	39 U
Aroclor-1242	38 U	40 U	40 U	38 U	38 U	NA	NA	38 U	NA	NA	38 U	38 U	38 U	39 U	39 U
Aroclor-1248	38 U	40 U	40 U	38 U	38 U	NA	NA	38 U	NA	NA	38 U	38 U	38 U	39 U	39 U
Aroclor-1254	38 U	40 U	40 U	38 U	38 U	NA	NA	38 U	NA	NA	38 U	38 U	38 U	39 U	39 U
Aroclor-1260	38 U	40 U	40 U	38 U	38 U	NA	NA	38 U	NA	NA	38 U	38 U	38 U	39 U	39 U
Dieldrin	3.8 U	4 U	4 U	3.8 U	3.8 U	NA	NA	3.8 U	NA	NA	3.8 U	3.8 U	3.8 U	3.9 U	3.9 U
Endosulfan I	2 U	2.1 U	2.1 U	1.9 U	1.9 U	NA	NA	2 U	NA	NA	1.9 U	1.9 U	2 U	2 U	2 U
Endosulfan II	3.8 U	4 U	4 U	3.8 U	3.8 U	NA	NA	3.8 U	NA	NA	3.8 U	3.8 U	3.8 U	3.9 U	3.9 U
Endosulfan sulfate	3.8 U	4 U	4 U	3.8 U	3.8 U	NA	NA	3.8 U	NA	NA	3.8 U	3.8 U	3.8 U	3.9 U	3.9 U
Endrin	3.8 U	4 U	4 U	3.8 U	3.8 U	NA	NA	3.8 U	NA	NA	3.8 U	3.8 U	3.8 U	3.9 U	3.9 U
Endrin aldehyde	3.8 U	4 U	4 U	3.8 U	3.8 U	NA	NA	3.8 U	NA	NA	3.8 U	3.8 U	3.8 U	3.9 U	3.9 U
Endrin ketone	3.8 U	4 U	4 U	3.8 U	3.8 U	NA	NA	3.8 U	NA	NA	3.8 U	3.8 U	3.8 U	3.9 U	3.9 U
Heptachlor	2 U	2.1 U	2.1 U	1.9 U	1.9 U	NA	NA	2 U	NA	NA	1.9 U	1.9 U	2 U	2 U	2 U
Heptachlor epoxide	2 U	2.1 U	2.1 U	1.9 U	1.9 U	NA	NA	2 U	NA	NA	1.9 U	1.9 U	2 U	2 U	2 U
Methoxychlor	20 U	21 U	21 U	19 U	19 U	NA	NA	20 U	NA	NA	19 U	19 U	20 U	20 U	20 U
Toxaphene	200 U	210 U	210 U	190 U	190 U	NA	NA	200 U	NA	NA	190 U	190 U	200 U	200 U	200 U
alpha-BHC	2 U	2.1 U	2.1 U	1.9 U	1.9 U	NA	NA	2 U	NA	NA	1.9 U	1.9 U	2 U	2 U	2 U
alpha-Chlordane	2 U	2.1 U	2.1 U	1.9 U	1.9 U	NA	NA	2 U	NA	NA	1.9 U	1.9 U	2 U	2 U	2 U
beta-BHC	2 U	2.1 U	2.1 U	1.9 U	1.9 U	NA	NA	2 U	NA	NA	1.9 U	1.9 U	2 U	2 U	2 U
delta-BHC	2 U	2.1 U	2.1 U	1.9 U	1.9 U	NA	NA	2 U	NA	NA	1.9 U	1.9 U	2 U	2 U	2 U
gamma-BHC (Lindane)	2 U	2.1 U	2.1 U	1.9 U	1.9 U	NA	NA	2 U	NA	NA	1.9 U	1.9 U	2 U	2 U	2 U
gamma-Chlordane	2 U	2.1 U	2.1 U	1.9 U	1.9 U	NA	NA	2 U	NA	NA	1.9 U	1.9 U	2 U	2 U	2 U
Total Metals (MG/KG)															
Aluminum	12,200	10,400	9,840	10,200 J	10,400 J	NA	NA	10,500 J	NA	NA	7,860 J	8,400 J	8,120 J	11,400 J	11,000 J
Antimony	0.66 UJ	0.37 UJ	0.24 UJ	0.41 UJ	0.11 UJ	NA	NA	1.2 J	NA	NA	0.14 UJ	0.13 UJ	0.29 UJ	0.29 UJ	0.25 UJ
Arsenic	1.7	76.2	45.2	6.7	1 U	NA	NA	436	NA	NA	1.3 U	1.2 U	6.1	5.8	2.6
Barium	13.7 J	16.4 J	19.9	11.5 J	12.6 J	NA	NA	16.9	NA	NA	9.4 J	9.9 J	9.8 J	13.9 J	14.5 J
Beryllium	0.14 J	0.097 J	0.097 J	0.13 J	0.095 J	NA	NA	0.1 J	NA	NA	0.099 J	0.073 J	0.1 J	0.14 J	0.12 J
Cadmium	0.42 U	0.44 U	0.43 U	0.32 J	0.029 U	NA	NA	0.063 U	NA	NA	0.4 U	0.39 U	0.39 U	0.41 U	0.39 U
Calcium	24.2 U	859	888	113 J	141 J	NA	NA	806	NA	NA	514	433	80.4 J	80.1 J	118 J
Chromium	18.1	14.6	12.3	17 J	11.6 J	NA	NA	11.8 J	NA	NA	5.8 J	5.9 J	13.5 J	20.4 J	15.2 J
Cobalt	0.55 J	0.37 J	0.33 J	1.1 J	0.6 J	NA	NA	0.69 J	NA	NA	0.37 J	0.39 J	0.94 J-	1.4 J-	0.88 J-
Copper	4 U	7.5	4.4 U	4.8 U	4.4 U	NA	NA	4.3 U	NA	NA	3.9 U	4.3 U	4.7 U	4.9 U	4.5 U
Iron	4,950	5,750	3,610	7,190 J	2,310 J	NA	NA	3,110 J	NA	NA	1,670 J	1,760 J	7,160 J	11,200 J	5,320 J
Lead	7.2 J	7.7 J	7.6 J	6.5	6.7	NA	NA	13.2	NA	NA	4.9	4.7	5.2	7.5	6.7
Magnesium	550	457	427 J	399 J	412 J	NA	NA	486 J	NA	NA	259 J	284 J	319 J	444 J	444 J
Manganese	7.8 J	11.8 J	12.5 J	6.1 J	6.2 J	NA	NA	12.9 J	NA	NA	5.7 J	5.9 J	5.1 J	5.8 J	6.7 J
Mercury	0.1 U	0.017 J	0.028 J	0.032 U	0.03 U	NA	NA	0.09 U	NA	NA	0.048 U	0.035 U	0.027 U	0.037 U	0.032 U
Nickel	1.8 J	1.6 J	1.6 J	1.5 J	1.6 J	NA	NA	1.8 J	NA	NA	1.4 J	1.5 J	1.2 J	1.5 J	1.5 J
Potassium	643 J	409 J	393 J	459 J	358 J	NA	NA	460 J	NA	NA	193 J	202 J	430 J	515 J	461 J
Selenium	0.76 U	0.36 U	0.43 U	1.7 U	0.36 U	NA	NA	0.46 U	NA	NA	0.11 U	0.45 U	1.4 U	2.5 U	1.1 U
Silver	0.83 U	0.89 U	0.051 J	0.17 U	0.033 U	NA	NA	0.016 U	NA	NA	0.8 U	0.77 U	0.13 U	0.072 U	0.039 U
Sodium	37.1 U	41.2 U	41.3 U	32.5 U	27.9 U	NA	NA	33.4 U	NA	NA	38.6 U	41.2 U	36.4 U	35.1 U	37.5 U
Thallium	1 U	0.14 U	2.2 U	0.54 U	0.26 U	NA	NA	0.095 U	NA	NA	2 U	0.079 U	0.17 U	0.37 U	0.11 U
Vanadium	24.2	20.2	15.9	25.5	14	NA	NA	15.3	NA	NA	6.8	7.6	20.5	27.8	20.6
Zinc	6.6 U	18.4	21.9	6.1 U	5.7 U	NA	NA	11	NA	NA	4.4 U	4.5 U	5.4 U	6.9 U	7 U

Notes:
U- Analyte not detected
J- Reported value is estimated
J- - Reported value is biased low
UJ- Analyte not detected. Quantiation limit is imprecise
NA- Not analyzed
Shading represents detection

Site 95 Subsurface Soil Raw Analytical Data
October 2006

Station ID	IR95B-IS125	IR95B-IS127		IR95B-IS129	IR95C-IS100	IR95C-IS101		IR95C-IS102	IR95C-IS103	IR95C-IS105	IR95C-IS107	IR95C-IS109	IR95C-IS111	IR95C-IS113	
Sample ID	IR95B-IS125-3-4-06D-2	IR95B-IS127-3-4-06D-2	IR95B-IS127D-3-4-06D-2	IR95B-IS129-3-4-06D-2	IR95C-IS100-3-4-06D-1	IR95C-IS101-3-4-06D-1	IR95C-IS101-3-4-06D-2	IR95C-IS102-3-4-06D-1	IR95C-IS103-3-4-06D-2	IR95C-IS105-3-4-06D-2	IR95C-IS107-3-4-06D-2	IR95C-IS109-3-4-06D-2	IR95C-IS111-3-4-06D-2	IR95C-IS113-3-4-06D-2	IR95C-IS113D-3-4-06D-2
Sample Date	10/05/06	10/05/06	10/05/06	10/05/06	10/03/06	10/03/06	10/03/06	10/03/06	10/03/06	10/03/06	10/03/06	10/03/06	10/03/06	10/03/06	10/03/06
Chemical Name															
Pesticide/Polychlorinated Biphenyls (UG/KG)															
4,4'-DDD	3.8 U	3.8 U	3.9 U	3.8 U	NA	NA	3.8 U	NA	3.6 U	3.7 U	3.6 U	3.7 U	3.7 U	3.6 U	3.6 U
4,4'-DDE	3.8 U	3.8 U	3.9 U	3.8 U	NA	NA	3.8 U	NA	3.6 U	3.7 U	3.6 U	3.7 U	3.7 U	3.6 U	3.6 U
4,4'-DDT	3.8 U	3.8 U	3.9 U	3.8 U	NA	NA	3.8 U	NA	3.6 U	3.7 U	3.6 U	3.7 U	3.7 U	3.6 U	3.6 U
Aldrin	1.9 U	2 U	2 U	1.9 U	NA	NA	1.9 U	NA	1.8 U	1.9 U	1.8 U	1.9 U	1.9 U	1.8 U	1.8 U
Aroclor-1016	38 U	38 U	39 U	38 U	NA	NA	38 U	NA	36 U	37 U	36 U	37 U	37 U	36 U	36 U
Aroclor-1221	77 U	77 U	79 U	76 U	NA	NA	76 U	NA	73 U	76 U	73 U	75 U	76 U	72 U	73 U
Aroclor-1232	38 U	38 U	39 U	38 U	NA	NA	38 U	NA	36 U	37 U	36 U	37 U	37 U	36 U	36 U
Aroclor-1242	38 U	38 U	39 U	38 U	NA	NA	38 U	NA	36 U	37 U	36 U	37 U	37 U	36 U	36 U
Aroclor-1248	38 U	38 U	39 U	38 U	NA	NA	38 U	NA	36 U	37 U	36 U	37 U	37 U	36 U	36 U
Aroclor-1254	38 U	38 U	39 U	38 U	NA	NA	38 U	NA	36 U	37 U	36 U	37 U	37 U	36 U	36 U
Aroclor-1260	38 U	38 U	39 U	38 U	NA	NA	38 U	NA	36 U	37 U	36 U	37 U	37 U	36 U	36 U
Dieldrin	3.8 U	3.8 U	3.9 U	3.8 U	NA	NA	3.8 U	NA	3.6 U	3.7 U	3.6 U	3.7 U	3.7 U	3.6 U	3.6 U
Endosulfan I	1.9 U	2 U	2 U	1.9 U	NA	NA	1.9 U	NA	1.8 U	1.9 U	1.8 U	1.9 U	1.9 U	1.8 U	1.8 U
Endosulfan II	3.8 U	3.8 U	3.9 U	3.8 U	NA	NA	3.8 U	NA	3.6 U	3.7 U	3.6 U	3.7 U	3.7 U	3.6 U	3.6 U
Endosulfan sulfate	3.8 U	3.8 U	3.9 U	3.8 U	NA	NA	3.8 U	NA	3.6 U	3.7 U	3.6 U	3.7 U	3.7 U	3.6 U	3.6 U
Endrin	3.8 U	3.8 U	3.9 U	3.8 U	NA	NA	3.8 U	NA	3.6 U	3.7 U	3.6 U	3.7 U	3.7 U	3.6 U	3.6 U
Endrin aldehyde	3.8 U	3.8 U	3.9 U	3.8 U	NA	NA	3.8 U	NA	3.6 U	3.7 U	3.6 U	3.7 U	3.7 U	3.6 U	3.6 U
Endrin ketone	3.8 U	3.8 U	3.9 U	3.8 U	NA	NA	3.8 U	NA	3.6 U	3.7 U	3.6 U	3.7 U	3.7 U	3.6 U	3.6 U
Heptachlor	1.9 U	2 U	2 U	1.9 U	NA	NA	1.9 U	NA	1.8 U	1.9 U	1.8 U	1.9 U	1.9 U	1.8 U	1.8 U
Heptachlor epoxide	1.9 U	2 U	2 U	1.9 U	NA	NA	1.9 U	NA	1.8 U	1.9 U	1.8 U	1.9 U	1.9 U	1.8 U	1.8 U
Methoxychlor	19 U	20 U	20 U	19 U	NA	NA	19 U	NA	18 U	19 U	18 U	19 U	19 U	18 U	18 U
Toxaphene	190 U	200 U	200 U	190 U	NA	NA	190 U	NA	180 U	190 U	180 U	190 U	190 U	180 U	180 U
alpha-BHC	1.9 U	2 U	2 U	1.9 U	NA	NA	1.9 U	NA	1.8 U	1.9 U	1.8 U	1.9 U	1.9 U	1.8 U	1.8 U
alpha-Chlordane	1.9 U	2 U	2 U	1.9 U	NA	NA	1.9 U	NA	1.8 U	1.9 U	1.8 U	1.9 U	1.9 U	1.8 U	1.8 U
beta-BHC	1.9 U	2 U	2 U	1.9 U	NA	NA	1.9 U	NA	1.8 U	1.9 U	1.8 U	1.9 U	1.9 U	1.8 U	1.8 U
delta-BHC	1.9 U	2 U	2 U	1.9 U	NA	NA	1.9 U	NA	1.8 U	1.9 U	1.8 U	1.9 U	1.9 U	1.8 U	1.8 U
gamma-BHC (Lindane)	1.9 U	2 U	2 U	1.9 U	NA	NA	1.9 U	NA	1.8 U	1.9 U	1.8 U	1.9 U	1.9 U	1.8 U	1.8 U
gamma-Chlordane	1.9 U	2 U	2 U	1.9 U	NA	NA	1.9 U	NA	1.8 U	1.9 U	1.8 U	1.9 U	1.9 U	1.8 U	1.8 U
Total Metals (MG/KG)															
Aluminum	11,700 J	12,000 J	11,100	7,510 J	NA	NA	11,100 J	NA	4,220 J	11,700 J	2,880 J	11,800 J	10,300	6,020 J	6,320 J
Antimony	0.31 UJ	0.19 UJ	0.46 UJ	0.18 UJ	NA	NA	4.9 UJ	NA	0.098 UJ	0.063 UJ	0.14 UJ	0.58 UJ	0.12 UJ	4.6 UJ	0.057 UJ
Arsenic	2	3.1	3.6	1.7	NA	NA	0.094 UJ	NA	1.3 J-	0.79 UJ	0.13 UJ	0.76 UJ	0.49 U	1.2 J-	0.96 UJ
Barium	16.2	13.5 J	12.5 J	8.3 J	NA	NA	13.3 J	NA	6.4 J	16.9 J	5.8 J	14.6 J	12.6 J	9.7 J	9.9 J
Beryllium	0.12 J	0.14 J	0.056 J	0.082 J	NA	NA	0.099 J	NA	0.068 J	0.14 J	0.036 J	0.15 J	0.11 J	0.097 J	0.096 J
Cadmium	0.39 U	0.4 U	0.31 J	0.41 U	NA	NA	0.4 UJ	NA	0.38 UJ	0.4 UJ	0.37 UJ	0.4 UJ	0.39 U	0.38 UJ	0.37 UJ
Calcium	118 J	158 J	248 J	107 J	NA	NA	89.7 UJ	NA	36.1 UJ	400 UJ	370 UJ	400 UJ	390 UJ	380 UJ	196 UJ
Chromium	14.7 J	18.5 J	19.4	10.2 J	NA	NA	11 J	NA	6.3 J-	14.2 J	3 J-	14.2 J	11.4 J	8.8 J	9 J
Cobalt	0.91 J-	0.97 J-	1.1 J	0.51 J-	NA	NA	0.71 J	NA	0.24 U	0.66 J	0.18 U	0.71 J	0.57 J	0.4 U	0.44 J
Copper	5.1 U	5.2 U	6 U	4.3 U	NA	NA	3.8 U	NA	3.2 U	4.8 U	2.6 U	4.5 U	4.1 U	4 U	3.6 U
Iron	5,240 J	5,910 J	6,900	2,780 J	NA	NA	3,040 J	NA	3,100 J	3,770 J	748 J	3,790 J	3,490 J	4,500 J	3,930 J
Lead	7.1	7.1	6.7	6	NA	NA	5.9 J	NA	3.3 J	6.5 J	3.7 J	5.8 J	6	4.3 J	4.3 J
Magnesium	473 J	494 J	444	323 J	NA	NA	341 J	NA	174 J	421 J	81.8 J	415 J	352 J	247 J	263 J
Manganese	7.4 J	7.1 J	6.1	5 J	NA	NA	7.1 J	NA	3.9 J	7 J	4.3 J	8.5 J	5.8 J	5.2 J	5.3 J
Mercury	0.032 U	0.026 U	0.027 U	0.027 U	NA	NA	0.099 U	NA	0.1 U	0.099 U	0.095 U	0.1 U	0.091 UJ	0.039 J	0.099 U
Nickel	1.8 J	1.7 J	2.2 J	1.2 J	NA	NA	2.4 J	NA	1.1 J	2.4 J	0.91 J	2.5 J	2.1 J	1.4 J	1.5 J
Potassium	449 J	553 J	461 J	367 J	NA	NA	459 J	NA	329 J	653 J	114 J	790 J	550 J	480 J	487 J
Selenium	1.1 U	1.5 U	1.5 U	0.59 U	NA	NA	0.31 U	NA	0.25 U	0.42 U	0.39 U	0.22 U	0.52 U	0.16 U	0.7 U
Silver	0.019 U	0.79 U	0.2 U	0.023 U	NA	NA	0.082 U	NA	0.024 U	0.045 U	0.03 U	0.023 U	0.77 U	0.056 U	0.04 U
Sodium	43.2 U	63.6 U	42.8 U	32.3 U	NA	NA	46 U	NA	30.5 U	43.7 U	24.1 U	36.8 U	38.5 UJ	39 U	33.5 U
Thallium	0.2 U	0.16 U	0.46 U	2 U	NA	NA	0.24 U	NA	0.095 U	0.74 U	0.18 U	2 U	0.18 U	0.72 U	0.36 U
Vanadium	20	23.1	22.9 J	12.9	NA	NA	15.4 J	NA	9.6 J	23.9 J	2.9 J	20.7 J	16.6	13.3 J	13.7 J
Zinc	6.8 U	7.7 U	9.7 U	6.5 U	NA	NA	5.8 U	NA	3.9 U	6.1 U	3.1 U	8.2 U	6.1 UJ	5 U	4.9 U

Notes:
U- Analyte not detected
J- Reported value is estimated
J- - Reported value is biased low
UJ- Analyte not detected. Quantiation limit is imprecise
NA- Not analyzed
Shading represents detection

Station ID	IR95C-IS115	IR95C-IS117	IR95C-IS119	IR95C-IS121	IR95C-IS123		IR95C-IS125	IR95C-IS127
Sample ID	IR95C-IS115-3-4-06D-2	IR95C-IS117-3-4-06D-2	IR95C-IS119-3-4-06D-2	IR95C-IS121-3-4-06D-2	IR95C-IS123-3-4-06D-2	IR95C-IS123D-3-4-06D-2	IR95C-IS125-3-4-06D-2	IR95C-IS127-3-4-06D-2
Sample Date	10/03/06	10/03/06	10/03/06	10/03/06	10/03/06	10/03/06	10/03/06	10/03/06
Chemical Name								
Pesticide/Polychlorinated Biphenyls (UG/KG)								
4,4'-DDD	3.8 U	3.8 U	3.6 U	3.7 U	3.7 U	3.8 U	3.6 U	3.9 U
4,4'-DDE	3.8 U	3.8 U	3.6 U	3.7 U	3.7 U	3.8 U	3.6 U	3.9 U
4,4'-DDT	3.8 U	3.8 U	3.6 U	3.7 U	5.1 J	3.8 U	3.6 U	3.9 U
Aldrin	2 U	2 U	1.8 U	1.9 U	1.9 U	1.9 U	1.9 U	2 U
Aroclor-1016	38 U	38 U	36 U	37 U	37 U	38 U	36 U	39 U
Aroclor-1221	78 U	78 U	73 U	74 U	76 U	77 U	74 U	79 U
Aroclor-1232	38 U	38 U	36 U	37 U	37 U	38 U	36 U	39 U
Aroclor-1242	38 U	38 U	36 U	37 U	37 U	38 U	36 U	39 U
Aroclor-1248	38 U	38 U	36 U	37 U	37 U	38 U	36 U	39 U
Aroclor-1254	38 U	38 U	36 U	37 U	37 U	38 U	36 U	39 U
Aroclor-1260	38 U	38 U	36 U	37 U	37 U	38 U	36 U	39 U
Dieldrin	3.8 U	3.8 U	3.6 U	3.7 U	3.7 U	3.8 U	3.6 U	3.9 U
Endosulfan I	2 U	2 U	1.8 U	1.9 U	1.9 U	1.9 U	1.9 U	2 U
Endosulfan II	3.8 U	3.8 U	3.6 U	3.7 U	3.7 U	3.8 U	3.6 U	3.9 U
Endosulfan sulfate	3.8 U	3.8 U	3.6 U	3.7 U	3.7 U	3.8 U	3.6 U	3.9 U
Endrin	3.8 U	3.8 U	3.6 U	3.7 U	3.7 U	3.8 U	3.6 U	3.9 U
Endrin aldehyde	3.8 U	3.8 U	3.6 U	3.7 U	2.3 J	3.8 U	3.6 U	3.9 U
Endrin ketone	3.8 U	3.8 U	3.6 U	3.7 U	3.7 U	3.8 U	3.6 U	3.9 U
Heptachlor	2 U	2 U	1.8 U	1.9 U	1.9 U	1.9 U	1.9 U	2 U
Heptachlor epoxide	2 U	2 U	1.8 U	1.9 U	1.9 U	1.9 U	1.9 U	2 U
Methoxychlor	20 U	20 U	18 U	19 U	47	23 J	19 U	20 U
Toxaphene	200 U	200 U	180 U	190 U	190 U	190 U	190 U	200 U
alpha-BHC	2 U	2 U	1.8 U	1.9 U	1.9 U	1.9 U	1.9 U	2 U
alpha-Chlordane	2 U	2 U	1.8 U	1.9 U	1.9 U	1.9 U	1.9 U	2 U
beta-BHC	2 U	2 U	1.8 U	1.9 U	1.9 U	1.9 U	1.9 U	2 U
delta-BHC	2 U	2 U	1.8 U	1.9 U	1.9 U	1.9 U	1.9 U	2 U
gamma-BHC (Lindane)	2 U	2 U	1.8 U	1.9 U	1.9 U	1.9 U	1.9 U	2 U
gamma-Chlordane	2 U	2 U	1.8 U	1.9 U	1.9 U	1.9 U	1.9 U	2 U
Total Metals (MG/KG)								
Aluminum	13,200	21,300	846	5,480	2,360	2,580	2,000	21,600
Antimony	4.8 UJ	5 UJ	0.049 UJ	4.8 UJ	4.8 UJ	0.086 UJ	0.16 UJ	0.36 UJ
Arsenic	1.4	2.2	0.079 U	1.7	0.072 U	0.18 U	0.12 U	1.8
Barium	14.1 J	18 J	2.4 J	7.3 J	19.2 J	24.7 J	3.6 J	20.7 J
Beryllium	0.08 J	0.12 J	0.02 J	0.068 J	0.038 J	0.044 J	0.031 J	0.11 J
Cadmium	0.4 U	0.42 U	0.37 U	0.4 U	0.4 U	0.39 U	0.38 U	0.42 U
Calcium	400 U	420 UJ	27.9 UJ	8.9 UJ	155 J	161 J	32.5 UJ	142 J
Chromium	13.1	20 J	1.8 J	12.3 J	2.4 J	2.5 J	2.7 J	19.8 J
Cobalt	0.69 J	1.1 J	0.13 J	0.38 J	0.14 J	0.15 J	0.15 J	1 J
Copper	4 U	5 U	2.1 U	3.3 U	2.9 U	3.3 U	2.8 U	5.1 U
Iron	6,850	11,600 J	408 J	3,880 J	1,070 J	1,180 J	983 J	9,830 J
Lead	6.1	6.9	2.4	4	3	3.4	3.2	7.9
Magnesium	310 J	491 J	33.2 J	185 J	54 J	60.6 J	52.4 J	551 J
Manganese	5.3	8.8 J	3.2 J	4.4 J	3.9 J	4.2 J	3.7 J	7.8 J
Mercury	0.11 UJ	0.012 J-	0.09 UJ	0.092 UJ	0.1 UJ	0.095 UJ	0.089 UJ	0.11 UJ
Nickel	2.5 J	3.9 J	0.31 UJ	3.1 J	0.6 UJ	0.68 UJ	0.61 UJ	3.8 J
Potassium	275 J	485 J	62.2 J	332 J	68.9 J	72.1 J	76.3 J	453 J
Selenium	0.28 U	0.98 U	0.38 U	0.55 U	0.6 U	0.51 U	0.38 U	0.71 U
Silver	0.062 U	0.073 U	0.048 U	0.049 U	0.018 U	0.78 U	0.021 U	0.11 U
Sodium	26.5 U	52.4 UJ	20.7 UJ	29.4 UJ	33 UJ	43.2 UJ	29.5 UJ	54 UJ
Thallium	1.1 U	0.61 U	0.13 U	0.35 U	0.12 U	0.16 U	0.13 U	0.38 U
Vanadium	20.6	31.3	1.6 J	17.3	2.7 J	3.1 J	2.7 J	26.6
Zinc	5.8 U	7.9 UJ	2.2 UJ	4.9 UJ	2.5 UJ	2.6 UJ	3 UJ	7.8 UJ

Notes:
U- Analyte not detected
J- Reported value is estimated
J- - Reported value is biased low
UJ- Analyte not detected. Quantiation limit is imprecise
NA- Not analyzed
Shading represents detection

Site 95
Surface Soil Raw Analytical Data
October 2006

Station ID	IR95A-IS100			IR95A-IS101		IR95A-IS102			IR95A-IS103	IR95A-IS104	IR95A-IS105	IR95A-IS106	IR95A-IS107	IR95A-IS108	IR95A-IS109
Sample ID	IR95A-IS100-0-1-06D-1	IR95A-IS100-0-1-06D-2	IR95A-IS100D-0-1-06D-2	IR95A-IS101-0-1-06D-1	IR95A-IS101-0-1-06D-2	IR95A-IS102-0-1-06D-1	IR95A-IS102D-0-1-06D-1	IR95A-IS102-0-1-06D-2	IR95A-IS103-0-1-06D-2	IR95A-IS104-0-1-06D-2	IR95A-IS105-0-1-06D-2	IR95A-IS106-0-1-06D-2	IR95A-IS107-0-1-06D-2	IR95A-IS108-0-1-06D-2	IR95A-IS109-0-1-06D-2
Sample Date	10/03/06	10/04/06	10/04/06	10/03/06	10/04/06	10/03/06	10/03/06	10/04/06	10/04/06	10/04/06	10/04/06	10/04/06	10/04/06	10/04/06	10/04/06
Chemical Name															
Volatile Organic Compounds (UG/KG)															
1,1,1-Trichloroethane	12 U	NA	NA	11 U	NA	12 U	12 U	NA	NA	NA	NA	NA	NA	NA	NA
1,1,2,2-Tetrachloroethane	12 U	NA	NA	11 U	NA	12 U	12 U	NA	NA	NA	NA	NA	NA	NA	NA
1,1,2-Trichloro-1,2,2-trifluoroethane(Freon-113)	12 U	NA	NA	11 U	NA	12 U	12 U	NA	NA	NA	NA	NA	NA	NA	NA
1,1,2-Trichloroethane	12 U	NA	NA	11 U	NA	12 U	12 U	NA	NA	NA	NA	NA	NA	NA	NA
1,1-Dichloroethane	12 U	NA	NA	11 U	NA	12 U	12 U	NA	NA	NA	NA	NA	NA	NA	NA
1,1-Dichloroethene	12 U	NA	NA	11 U	NA	12 U	12 U	NA	NA	NA	NA	NA	NA	NA	NA
1,2,4-Trichlorobenzene	12 U	NA	NA	11 U	NA	12 U	12 U	NA	NA	NA	NA	NA	NA	NA	NA
1,2-Dibromo-3-chloropropane	12 U	NA	NA	11 U	NA	12 U	12 U	NA	NA	NA	NA	NA	NA	NA	NA
1,2-Dibromoethane	12 U	NA	NA	11 U	NA	12 U	12 U	NA	NA	NA	NA	NA	NA	NA	NA
1,2-Dichlorobenzene	12 U	NA	NA	11 U	NA	12 U	12 U	NA	NA	NA	NA	NA	NA	NA	NA
1,2-Dichloroethane	12 U	NA	NA	11 U	NA	12 U	12 U	NA	NA	NA	NA	NA	NA	NA	NA
1,2-Dichloropropane	12 U	NA	NA	11 U	NA	12 U	12 U	NA	NA	NA	NA	NA	NA	NA	NA
1,3-Dichlorobenzene	12 U	NA	NA	11 U	NA	12 U	12 U	NA	NA	NA	NA	NA	NA	NA	NA
1,4-Dichlorobenzene	12 U	NA	NA	11 U	NA	12 U	12 U	NA	NA	NA	NA	NA	NA	NA	NA
2-Butanone	12 U	NA	NA	11 U	NA	12 U	12 U	NA	NA	NA	NA	NA	NA	NA	NA
2-Hexanone	12 U	NA	NA	11 U	NA	12 U	12 U	NA	NA	NA	NA	NA	NA	NA	NA
4-Methyl-2-pentanone	12 U	NA	NA	11 U	NA	12 U	12 U	NA	NA	NA	NA	NA	NA	NA	NA
Acetone	180	NA	NA	14	NA	78	100	NA	NA	NA	NA	NA	NA	NA	NA
Benzene	12 U	NA	NA	11 U	NA	12 U	12 U	NA	NA	NA	NA	NA	NA	NA	NA
Bromodichloromethane	12 U	NA	NA	11 U	NA	12 U	12 U	NA	NA	NA	NA	NA	NA	NA	NA
Bromoform	12 U	NA	NA	11 U	NA	12 U	12 U	NA	NA	NA	NA	NA	NA	NA	NA
Bromomethane	12 U	NA	NA	11 U	NA	12 U	12 U	NA	NA	NA	NA	NA	NA	NA	NA
Carbon disulfide	12 U	NA	NA	11 U	NA	12 U	12 U	NA	NA	NA	NA	NA	NA	NA	NA
Carbon tetrachloride	12 U	NA	NA	11 U	NA	12 U	12 U	NA	NA	NA	NA	NA	NA	NA	NA
Chlorobenzene	12 U	NA	NA	11 U	NA	12 U	12 U	NA	NA	NA	NA	NA	NA	NA	NA
Chloroethane	12 U	NA	NA	11 U	NA	12 U	12 U	NA	NA	NA	NA	NA	NA	NA	NA
Chloroform	12 U	NA	NA	11 U	NA	12 U	12 U	NA	NA	NA	NA	NA	NA	NA	NA
Chloromethane	12 U	NA	NA	11 U	NA	12 U	12 U	NA	NA	NA	NA	NA	NA	NA	NA
Cyclohexane	12 U	NA	NA	11 U	NA	12 U	12 U	NA	NA	NA	NA	NA	NA	NA	NA
Dibromochloromethane	12 U	NA	NA	11 U	NA	12 U	12 U	NA	NA	NA	NA	NA	NA	NA	NA
Dichlorodifluoromethane (Freon-12)	12 U	NA	NA	11 U	NA	12 U	12 U	NA	NA	NA	NA	NA	NA	NA	NA
Ethylbenzene	12 U	NA	NA	11 U	NA	12 U	12 U	NA	NA	NA	NA	NA	NA	NA	NA
Isopropylbenzene	12 U	NA	NA	11 U	NA	12 U	12 U	NA	NA	NA	NA	NA	NA	NA	NA
Methyl acetate	12 UJ	NA	NA	11 U	NA	12 U	12 U	NA	NA	NA	NA	NA	NA	NA	NA
Methyl-tert-butyl ether (MTBE)	12 U	NA	NA	11 U	NA	12 U	12 U	NA	NA	NA	NA	NA	NA	NA	NA
Methylcyclohexane	12 U	NA	NA	11 U	NA	12 U	12 U	NA	NA	NA	NA	NA	NA	NA	NA
Methylene chloride	12 U	NA	NA	11 U	NA	12 U	12 U	NA	NA	NA	NA	NA	NA	NA	NA
Styrene	12 U	NA	NA	11 U	NA	12 U	12 U	NA	NA	NA	NA	NA	NA	NA	NA
Tetrachloroethene	12 U	NA	NA	11 U	NA	12 U	12 U	NA	NA	NA	NA	NA	NA	NA	NA
Toluene	12 U	NA	NA	11 U	NA	12 U	12 U	NA	NA	NA	NA	NA	NA	NA	NA
Trichloroethene	12 U	NA	NA	11 U	NA	12 U	12 U	NA	NA	NA	NA	NA	NA	NA	NA
Trichlorofluoromethane(Freon-11)	12 UJ	NA	NA	11 U	NA	12 U	2 J	NA	NA	NA	NA	NA	NA	NA	NA
Vinyl chloride	12 U	NA	NA	11 U	NA	12 U	12 U	NA	NA	NA	NA	NA	NA	NA	NA
Xylene, total	12 U	NA	NA	11 U	NA	12 U	12 U	NA	NA	NA	NA	NA	NA	NA	NA
cis-1,2-Dichloroethene	12 U	NA	NA	11 U	NA	12 U	12 U	NA	NA	NA	NA	NA	NA	NA	NA
cis-1,3-Dichloropropene	12 U	NA	NA	11 U	NA	12 U	12 U	NA	NA	NA	NA	NA	NA	NA	NA
trans-1,2-Dichloroethene	12 U	NA	NA	11 U	NA	12 U	12 U	NA	NA	NA	NA	NA	NA	NA	NA
trans-1,3-Dichloropropene	12 U	NA	NA	11 U	NA	12 U	12 U	NA	NA	NA	NA	NA	NA	NA	NA

Station ID	IR95A-IS110	IR95A-IS111	IR95A-IS112	IR95A-IS113		IR95A-IS114	IR95A-IS115	IR95A-IS116	IR95A-IS117	IR95A-IS118	IR95A-IS119	IR95A-IS120	IR95A-IS121	IR95A-IS122	IR95A-IS123
Sample ID	IR95A-IS110-0-1-06D-2	IR95A-IS111-0-1-06D-2	IR95A-IS112-0-1-06D-2	IR95A-IS113-0-1-06D-2	IR95A-IS113D-0-1-06D-2	IR95A-IS114-0-1-06D-2	IR95A-IS115-0-1-06D-2	IR95A-IS116-0-1-06D-2	IR95A-IS117-0-1-06D-2	IR95A-IS118-0-1-06D-2	IR95A-IS119-0-1-06D-2	IR95A-IS120-0-1-06D-2	IR95A-IS121-0-1-06D-2	IR95A-IS122-0-1-06D-2	IR95A-IS123-0-1-06D-2
Sample Date	10/04/06	10/04/06	10/04/06	10/04/06	10/04/06	10/04/06	10/04/06	10/04/06	10/04/06	10/04/06	10/04/06	10/04/06	10/04/06	10/04/06	10/04/06
Chemical Name															
Volatile Organic Compounds (UG/KG)															
1,1,1-Trichloroethane	NA	NA	NA	NA	NA	NA	NA	NA	NA	NA	NA	NA	NA	NA	NA
1,1,2,2-Tetrachloroethane	NA	NA	NA	NA	NA	NA	NA	NA	NA	NA	NA	NA	NA	NA	NA
1,1,2-Trichloro-1,2,2-trifluoroethane(Freon-113)	NA	NA	NA	NA	NA	NA	NA	NA	NA	NA	NA	NA	NA	NA	NA
1,1,2-Trichloroethane	NA	NA	NA	NA	NA	NA	NA	NA	NA	NA	NA	NA	NA	NA	NA
1,1-Dichloroethane	NA	NA	NA	NA	NA	NA	NA	NA	NA	NA	NA	NA	NA	NA	NA
1,1-Dichloroethene	NA	NA	NA	NA	NA	NA	NA	NA	NA	NA	NA	NA	NA	NA	NA
1,2,4-Trichlorobenzene	NA	NA	NA	NA	NA	NA	NA	NA	NA	NA	NA	NA	NA	NA	NA
1,2-Dibromo-3-chloropropane	NA	NA	NA	NA	NA	NA	NA	NA	NA	NA	NA	NA	NA	NA	NA
1,2-Dibromoethane	NA	NA	NA	NA	NA	NA	NA	NA	NA	NA	NA	NA	NA	NA	NA
1,2-Dichlorobenzene	NA	NA	NA	NA	NA	NA	NA	NA	NA	NA	NA	NA	NA	NA	NA
1,2-Dichloroethane	NA	NA	NA	NA	NA	NA	NA	NA	NA	NA	NA	NA	NA	NA	NA
1,2-Dichloropropane	NA	NA	NA	NA	NA	NA	NA	NA	NA	NA	NA	NA	NA	NA	NA
1,3-Dichlorobenzene	NA	NA	NA	NA	NA	NA	NA	NA	NA	NA	NA	NA	NA	NA	NA
1,4-Dichlorobenzene	NA	NA	NA	NA	NA	NA	NA	NA	NA	NA	NA	NA	NA	NA	NA
2-Butanone	NA	NA	NA	NA	NA	NA	NA	NA	NA	NA	NA	NA	NA	NA	NA
2-Hexanone	NA	NA	NA	NA	NA	NA	NA	NA	NA	NA	NA	NA	NA	NA	NA
4-Methyl-2-pentanone	NA	NA	NA	NA	NA	NA	NA	NA	NA	NA	NA	NA	NA	NA	NA
Acetone	NA	NA	NA	NA	NA	NA	NA	NA	NA	NA	NA	NA	NA	NA	NA
Benzene	NA	NA	NA	NA	NA	NA	NA	NA	NA	NA	NA	NA	NA	NA	NA
Bromodichloromethane	NA	NA	NA	NA	NA	NA	NA	NA	NA	NA	NA	NA	NA	NA	NA
Bromoform	NA	NA	NA	NA	NA	NA	NA	NA	NA	NA	NA	NA	NA	NA	NA
Bromomethane	NA	NA	NA	NA	NA	NA	NA	NA	NA	NA	NA	NA	NA	NA	NA
Carbon disulfide	NA	NA	NA	NA	NA	NA	NA	NA	NA	NA	NA	NA	NA	NA	NA
Carbon tetrachloride	NA	NA	NA	NA	NA	NA	NA	NA	NA	NA	NA	NA	NA	NA	NA
Chlorobenzene	NA	NA	NA	NA	NA	NA	NA	NA	NA	NA	NA	NA	NA	NA	NA
Chloroethane	NA	NA	NA	NA	NA	NA	NA	NA	NA	NA	NA	NA	NA	NA	NA
Chloroform	NA	NA	NA	NA	NA	NA	NA	NA	NA	NA	NA	NA	NA	NA	NA
Chloromethane	NA	NA	NA	NA	NA	NA	NA	NA	NA	NA	NA	NA	NA	NA	NA
Cyclohexane	NA	NA	NA	NA	NA	NA	NA	NA	NA	NA	NA	NA	NA	NA	NA
Dibromochloromethane	NA	NA	NA	NA	NA	NA	NA	NA	NA	NA	NA	NA	NA	NA	NA
Dichlorodifluoromethane (Freon-12)	NA	NA	NA	NA	NA	NA	NA	NA	NA	NA	NA	NA	NA	NA	NA
Ethylbenzene	NA	NA	NA	NA	NA	NA	NA	NA	NA	NA	NA	NA	NA	NA	NA
Isopropylbenzene	NA	NA	NA	NA	NA	NA	NA	NA	NA	NA	NA	NA	NA	NA	NA
Methyl acetate	NA	NA	NA	NA	NA	NA	NA	NA	NA	NA	NA	NA	NA	NA	NA
Methyl-tert-butyl ether (MTBE)	NA	NA	NA	NA	NA	NA	NA	NA	NA	NA	NA	NA	NA	NA	NA
Methylcyclohexane	NA	NA	NA	NA	NA	NA	NA	NA	NA	NA	NA	NA	NA	NA	NA
Methylene chloride	NA	NA	NA	NA	NA	NA	NA	NA	NA	NA	NA	NA	NA	NA	NA
Styrene	NA	NA	NA	NA	NA	NA	NA	NA	NA	NA	NA	NA	NA	NA	NA
Tetrachloroethene	NA	NA	NA	NA	NA	NA	NA	NA	NA	NA	NA	NA	NA	NA	NA
Toluene	NA	NA	NA	NA	NA	NA	NA	NA	NA	NA	NA	NA	NA	NA	NA
Trichloroethene	NA	NA	NA	NA	NA	NA	NA	NA	NA	NA	NA	NA	NA	NA	NA
Trichlorofluoromethane(Freon-11)	NA	NA	NA	NA	NA	NA	NA	NA	NA	NA	NA	NA	NA	NA	NA
Vinyl chloride	NA	NA	NA	NA	NA	NA	NA	NA	NA	NA	NA	NA	NA	NA	NA
Xylene, total	NA	NA	NA	NA	NA	NA	NA	NA	NA	NA	NA	NA	NA	NA	NA
cis-1,2-Dichloroethene	NA	NA	NA	NA	NA	NA	NA	NA	NA	NA	NA	NA	NA	NA	NA
cis-1,3-Dichloropropene	NA	NA	NA	NA	NA	NA	NA	NA	NA	NA	NA	NA	NA	NA	NA
trans-1,2-Dichloroethene	NA	NA	NA	NA	NA	NA	NA	NA	NA	NA	NA	NA	NA	NA	NA
trans-1,3-Dichloropropene	NA	NA	NA	NA	NA	NA	NA	NA	NA	NA	NA	NA	NA	NA	NA

Site 95
Surface Soil Raw Analytical Data
October 2006

Station ID	IR95A-IS100			IR95A-IS101		IR95A-IS102			IR95A-IS103	IR95A-IS104	IR95A-IS105	IR95A-IS106	IR95A-IS107	IR95A-IS108	IR95A-IS109
Sample ID	IR95A-IS100-0-1-06D-1	IR95A-IS100-0-1-06D-2	IR95A-IS100D-0-1-06D-2	IR95A-IS101-0-1-06D-1	IR95A-IS101-0-1-06D-2	IR95A-IS102-0-1-06D-1	IR95A-IS102D-0-1-06D-1	IR95A-IS102-0-1-06D-2	IR95A-IS103-0-1-06D-2	IR95A-IS104-0-1-06D-2	IR95A-IS105-0-1-06D-2	IR95A-IS106-0-1-06D-2	IR95A-IS107-0-1-06D-2	IR95A-IS108-0-1-06D-2	IR95A-IS109-0-1-06D-2
Sample Date	10/03/06	10/04/06	10/04/06	10/03/06	10/04/06	10/03/06	10/03/06	10/04/06	10/04/06	10/04/06	10/04/06	10/04/06	10/04/06	10/04/06	10/04/06
Chemical Name															
Semi-volatile Organic Compounds (UG/KG)															
1,1-Biphenyl	NA	360 U	380 U	NA	360 U	NA	NA	350 U	370 U	350 U	420 U	390 U	390 U	420 U	390 U
2,2'-Oxybis(1-chloropropane)	NA	360 U	380 U	NA	360 U	NA	NA	350 U	370 U	350 U	420 U	390 U	390 U	420 U	390 U
2,4,5-Trichlorophenol	NA	900 U	940 U	NA	900 U	NA	NA	880 U	930 U	890 U	1,100 U	980 U	990 U	1,100 U	990 U
2,4,6-Trichlorophenol	NA	360 U	380 U	NA	360 U	NA	NA	350 U	370 U	350 U	420 U	390 U	390 U	420 U	390 U
2,4-Dichlorophenol	NA	360 U	380 U	NA	360 U	NA	NA	350 U	370 U	350 U	420 U	390 U	390 U	420 U	390 U
2,4-Dimethylphenol	NA	360 U	380 U	NA	360 U	NA	NA	350 U	370 U	350 U	420 U	390 U	390 U	420 U	390 U
2,4-Dinitrophenol	NA	900 UJ	940 UJ	NA	900 UJ	NA	NA	880 UJ	930 UJ	890 UJ	1,100 UJ	980 UJ	990 UJ	1,100 UJ	990 UJ
2,4-Dinitrotoluene	NA	360 U	380 U	NA	360 U	NA	NA	350 U	370 U	350 U	420 U	390 U	390 U	420 U	390 U
2,6-Dinitrotoluene	NA	360 U	380 U	NA	360 U	NA	NA	350 U	370 U	350 U	420 U	390 U	390 U	420 U	390 U
2-Chloronaphthalene	NA	360 U	380 U	NA	360 U	NA	NA	350 U	370 U	350 U	420 U	390 U	390 U	420 U	390 U
2-Chlorophenol	NA	360 U	380 U	NA	360 U	NA	NA	350 U	370 U	350 U	420 U	390 U	390 U	420 U	390 U
2-Methylnaphthalene	NA	360 U	380 U	NA	360 U	NA	NA	350 U	370 U	350 U	420 U	390 U	390 U	420 U	390 U
2-Methylphenol	NA	360 U	380 U	NA	360 U	NA	NA	350 U	370 U	350 U	420 U	390 U	390 U	420 U	390 U
2-Nitroaniline	NA	900 U	940 U	NA	900 U	NA	NA	880 U	930 U	890 U	1,100 U	980 U	990 U	1,100 U	990 U
2-Nitrophenol	NA	360 U	380 U	NA	360 U	NA	NA	350 U	370 U	350 U	420 U	390 U	390 U	420 U	390 U
3,3'-Dichlorobenzidine	NA	360 U	380 U	NA	360 UJ	NA	NA	350 U	370 UJ	350 UJ	420 UJ	390 UJ	390 UJ	420 UJ	390 UJ
3-Nitroaniline	NA	900 U	940 U	NA	900 U	NA	NA	880 U	930 U	890 U	1,100 U	980 U	990 U	1,100 U	990 U
4,6-Dinitro-2-methylphenol	NA	900 U	940 U	NA	900 U	NA	NA	880 U	930 UJ	890 UJ	1,100 UJ	980 UJ	990 UJ	1,100 UJ	990 UJ
4-Bromophenyl-phenylether	NA	360 U	380 U	NA	360 U	NA	NA	350 U	370 U	350 U	420 U	390 U	390 U	420 U	390 U
4-Chloro-3-methylphenol	NA	360 U	380 U	NA	360 U	NA	NA	350 U	370 U	350 U	420 U	390 U	390 U	420 U	390 U
4-Chloroaniline	NA	360 U	380 U	NA	360 U	NA	NA	350 U	370 U	350 U	420 U	390 U	390 U	420 U	390 U
4-Chlorophenyl-phenylether	NA	360 U	380 U	NA	360 U	NA	NA	350 U	370 U	350 U	420 U	390 U	390 U	420 U	390 U
4-Methylphenol	NA	360 U	380 U	NA	360 U	NA	NA	350 U	370 U	350 U	420 U	390 U	390 U	420 U	390 U
4-Nitroaniline	NA	900 UJ	940 UJ	NA	900 UJ	NA	NA	880 UJ	930 UJ	890 UJ	1,100 UJ	980 UJ	990 UJ	1,100 UJ	990 UJ
4-Nitrophenol	NA	900 U	940 U	NA	900 U	NA	NA	880 U	930 U	890 U	1,100 U	980 U	990 U	1,100 U	990 U
Acenaphthene	NA	360 U	380 U	NA	360 U	NA	NA	350 U	370 U	350 U	420 U	390 U	390 U	420 U	390 U
Acenaphthylene	NA	360 U	380 U	NA	360 U	NA	NA	350 U	370 U	350 U	420 U	390 U	390 U	420 U	390 U
Acetophenone	NA	360 U	380 U	NA	360 U	NA	NA	350 U	370 U	350 U	420 U	390 U	390 U	420 U	390 U
Anthracene	NA	360 U	380 U	NA	360 U	NA	NA	350 U	370 U	350 U	420 U	390 U	390 U	420 U	390 U
Atrazine	NA	360 U	380 U	NA	360 U	NA	NA	350 U	370 U	350 U	420 U	390 U	390 U	420 U	390 U
Benzaldehyde	NA	360 UJ	380 UJ	NA	360 U	NA	NA	350 UJ	370 U	350 U	420 U	120 J	71 J	420 U	42 J
Benzo(a)anthracene	NA	360 U	380 U	NA	360 U	NA	NA	350 U	370 U	350 U	420 U	390 U	390 U	46 J	390 U
Benzo(a)pyrene	NA	360 U	380 U	NA	360 U	NA	NA	350 U	370 U	350 U	420 U	390 U	390 U	420 U	390 U
Benzo(b)fluoranthene	NA	360 U	380 U	NA	360 U	NA	NA	350 U	370 U	350 U	420 U	390 U	390 U	420 U	390 U
Benzo(g,h,i)perylene	NA	360 U	380 U	NA	360 U	NA	NA	350 U	370 U	350 U	420 U	390 U	390 U	420 U	390 U
Benzo(k)fluoranthene	NA	360 U	380 U	NA	360 U	NA	NA	350 U	370 U	350 U	420 U	390 U	390 U	420 U	390 U
Butylbenzylphthalate	NA	360 U	380 U	NA	360 U	NA	NA	350 U	370 U	350 U	420 U	390 U	390 U	420 U	390 U
Caprolactam	NA	360 U	380 U	NA	360 U	NA	NA	350 U	370 U	350 U	420 U	390 U	390 U	420 U	390 U
Carbazole	NA	360 U	380 U	NA	360 U	NA	NA	350 U	370 U	350 U	420 U	390 U	390 U	420 U	390 U
Chrysene	NA	360 U	380 U	NA	360 U	NA	NA	350 U	370 U	350 U	420 U	390 U	390 U	43 J	390 U
Di-n-butylphthalate	NA	48 J	48 J	NA	43 J	NA	NA	45 J	41 J	51 J	67 J	53 J	53 J	71 J	79 J
Di-n-octylphthalate	NA	360 U	380 U	NA	360 U	NA	NA	350 U	370 UJ	350 UJ	420 UJ	390 UJ	390 UJ	420 UJ	390 UJ
Dibenz(a,h)anthracene	NA	360 U	380 U	NA	360 U	NA	NA	350 U	370 U	350 U	420 U	390 U	390 U	420 U	390 U
Dibenzofuran	NA	360 U	380 U	NA	360 U	NA	NA	350 U	370 U	350 U	420 U	390 U	390 U	420 U	390 U
Diethylphthalate	NA	360 U	380 U	NA	360 U	NA	NA	350 U	370 U	350 U	420 U	390 U	390 U	420 U	390 U
Dimethyl phthalate	NA	360 U	380 U	NA	360 U	NA	NA	350 U	370 U	350 U	420 U	390 U	390 U	420 U	390 U
Fluoranthene	NA	360 U	380 U	NA	360 U	NA	NA	350 U	370 U	350 U	420 U	390 U	390 U	75 J	390 U
Fluorene	NA	360 U	380 U	NA	360 U	NA	NA	350 U	370 U	350 U	420 U	390 U	390 U	420 U	390 U
Hexachlorobenzene	NA	360 U	380 U	NA	360 U	NA	NA	350 U	370 U	350 U	420 U	390 U	390 U	420 U	390 U
Hexachlorobutadiene	NA	360 U	380 U	NA	360 U	NA	NA	350 U	370 U	350 U	420 U	390 U	390 U	420 U	390 U
Hexachlorocyclopentadiene	NA	360 UJ	380 UJ	NA	360 U	NA	NA	350 UJ	370 U	350 U	420 U	390 U	390 U	420 U	390 U
Hexachloroethane	NA	360 U	380 U	NA	360 U	NA	NA	350 U	370 U	350 U	420 U	390 U	390 U	420 U	390 U
Indeno(1,2,3-cd)pyrene	NA	360 U	380 U	NA	360 U	NA	NA	350 U	370 U	350 U	420 U	390 U	390 U	420 U	390 U
Isophorone	NA	360 U	380 U	NA	360 U	NA	NA	350 U	370 U	350 U	420 U	390 U	390 U	420 U	390 U
Naphthalene	NA	360 U	380 U	NA	360 U	NA	NA	350 U	370 U	350 U	420 U	390 U	390 U	420 U	390 U
Nitrobenzene	NA	360 U	380 U	NA	360 U	NA	NA	350 U	370 U	350 U	420 U	390 U	390 U	420 U	390 U
Pentachlorophenol	NA	900 U	940 U	NA	900 U	NA	NA	880 U	930 U	890 U	1,100 U	980 U	990 U	1,100 U	990 U
Phenanthrene	NA	360 U	380 U	NA	360 U	NA	NA	350 U	370 U	350 U	420 U	390 U	390 U	420 U	390 U
Phenol	NA	360 U	380 U	NA	360 U	NA	NA	350 U	370 U	350 U	420 U	390 U	390 U	420 U	390 U
Pyrene	NA	360 U	380 U	NA	360 U	NA	NA	350 U	370 U	350 U	420 U	390 U	390 U	61 J	390 U
bis(2-Chloroethoxy)methane	NA	360 U	380 U	NA	360 U	NA	NA	350 U	370 U	350 U	420 U	390 U	390 U	420 U	390 U
bis(2-Chloroethyl)ether	NA	360 U	380 U	NA	360 U	NA	NA	350 U	370 U	350 U	420 U	390 U	390 U	420 U	390 U
bis(2-Ethylhexyl)phthalate	NA	80 J	150 J	NA	140 J	NA	NA	190 J	130 J	99 J	200 J	150 J	810	190 J	160 J
n-Nitroso-di-n-propylamine	NA	360 UJ	380 UJ	NA	360 UJ	NA	NA	350 UJ	370 U	350 U	420 U	390 U	390 U	420 U	390 U
n-Nitrosodiphenylamine	NA	360 U	380 U	NA	360 U	NA	NA	350 U	370 U	350 U	420 U	390 U	390 U	420 U	390 U

Site 95
Surface Soil Raw Analytical Data
October 2006

Station ID	IR95A-IS110	IR95A-IS111	IR95A-IS112	IR95A-IS113		IR95A-IS114	IR95A-IS115	IR95A-IS116	IR95A-IS117	IR95A-IS118	IR95A-IS119	IR95A-IS120	IR95A-IS121	IR95A-IS122	IR95A-IS123
Sample ID	IR95A-IS110-0-1-06D-2	IR95A-IS111-0-1-06D-2	IR95A-IS112-0-1-06D-2	IR95A-IS113-0-1-06D-2	IR95A-IS113D-0-1-06D-2	IR95A-IS114-0-1-06D-2	IR95A-IS115-0-1-06D-2	IR95A-IS116-0-1-06D-2	IR95A-IS117-0-1-06D-2	IR95A-IS118-0-1-06D-2	IR95A-IS119-0-1-06D-2	IR95A-IS120-0-1-06D-2	IR95A-IS121-0-1-06D-2	IR95A-IS122-0-1-06D-2	IR95A-IS123-0-1-06D-2
Sample Date	10/04/06	10/04/06	10/04/06	10/04/06	10/04/06	10/04/06	10/04/06	10/04/06	10/04/06	10/04/06	10/04/06	10/04/06	10/04/06	10/04/06	10/04/06
Chemical Name															
Semi-volatile Organic Compounds (UG/KG)															
1,1-Biphenyl	430 U	350 U	480 U	690 U	770 U	460 U	360 U	350 U	340 U	360 U	370 U	370 U	340 U	340 U	350 U
2,2'-Oxybis(1-chloropropane)	430 U	350 U	480 U	690 U	770 U	460 U	360 U	350 U	340 U	360 U	370 U	370 U	340 U	340 U	350 U
2,4,5-Trichlorophenol	1,100 U	880 U	1,200 U	1,700 U	1,900 U	1,200 U	910 U	870 U	850 U	900 U	920 U	930 U	860 U	860 U	880 U
2,4,6-Trichlorophenol	430 U	350 U	480 U	690 U	770 U	460 U	360 U	350 U	340 U	360 U	370 U	370 U	340 U	340 U	350 U
2,4-Dichlorophenol	430 U	350 U	480 U	690 U	770 U	460 U	360 U	350 U	340 U	360 U	370 U	370 U	340 U	340 U	350 U
2,4-Dimethylphenol	430 U	350 U	480 U	690 U	770 U	460 U	360 U	350 U	340 U	360 U	370 U	370 U	340 U	340 U	350 U
2,4-Dinitrophenol	1,100 UJ	880 UJ	1,200 UJ	1,700 UJ	1,900 UJ	1,200 UJ	910 UJ	870 UJ	850 UJ	900 UJ	920 UJ	930 UJ	860 UJ	860 UJ	880 UJ
2,4-Dinitrotoluene	430 U	350 U	480 U	690 U	770 U	460 U	360 U	350 U	340 U	360 U	370 U	370 U	340 U	340 U	350 U
2,6-Dinitrotoluene	430 U	350 U	480 U	690 U	770 U	460 U	360 U	350 U	340 U	360 U	370 U	370 U	340 U	340 U	350 U
2-Chloronaphthalene	430 U	350 U	480 U	690 U	770 U	460 U	360 U	350 U	340 U	360 U	370 U	370 U	340 U	340 U	350 U
2-Chlorophenol	430 U	350 U	480 U	690 U	770 U	460 U	360 U	350 U	340 U	360 U	370 U	370 U	340 U	340 U	350 U
2-Methylnaphthalene	430 U	350 U	480 U	690 U	770 U	460 U	360 U	350 U	340 U	360 U	370 U	370 U	340 U	340 U	350 U
2-Methylphenol	430 U	350 U	480 U	690 U	770 U	460 U	360 U	350 U	340 U	360 U	370 U	370 U	340 U	340 U	350 U
2-Nitroaniline	1,100 U	880 U	1,200 U	1,700 U	1,900 U	1,200 U	910 U	870 U	850 U	900 U	920 U	930 U	860 U	860 U	880 U
2-Nitrophenol	430 U	350 U	480 U	690 U	770 U	460 U	360 U	350 U	340 U	360 U	370 U	370 U	340 U	340 U	350 U
3,3'-Dichlorobenzidine	430 UJ	350 U	480 U	690 U	770 U	460 U	360 U	350 U	340 U	360 U	370 U	370 U	340 U	340 UJ	350 UJ
3-Nitroaniline	1,100 U	880 U	1,200 U	1,700 U	1,900 U	1,200 U	910 U	870 U	850 U	900 U	920 U	930 U	860 U	860 U	880 U
4,6-Dinitro-2-methylphenol	1,100 UJ	880 UJ	1,200 UJ	1,700 UJ	1,900 UJ	1,200 UJ	910 UJ	870 UJ	850 UJ	900 UJ	920 UJ	930 UJ	860 UJ	860 UJ	880 UJ
4-Bromophenyl-phenylether	430 U	350 U	480 U	690 U	770 U	460 U	360 U	350 U	340 U	360 U	370 U	370 U	340 U	340 U	350 U
4-Chloro-3-methylphenol	430 U	350 U	480 U	690 U	770 U	460 U	360 U	350 U	340 U	360 U	370 U	370 U	340 U	340 U	350 U
4-Chloroaniline	430 U	350 U	480 U	690 U	770 U	460 U	360 U	350 U	340 U	360 U	370 U	370 U	340 U	340 U	350 U
4-Chlorophenyl-phenylether	430 U	350 U	480 U	690 U	770 U	460 U	360 U	350 U	340 U	360 U	370 U	370 U	340 U	340 U	350 U
4-Methylphenol	430 U	350 U	480 U	690 U	770 U	160 J	360 U	350 U	340 U	360 U	370 U	370 U	340 U	340 U	350 U
4-Nitroaniline	1,100 UJ	880 U	1,200 U	1,700 U	1,900 U	1,200 U	910 U	870 U	850 U	900 U	920 U	930 U	860 U	860 UJ	880 UJ
4-Nitrophenol	1,100 U	880 U	1,200 U	1,700 U	1,900 U	1,200 U	910 U	870 U	850 U	900 U	920 U	930 U	860 U	860 U	880 U
Acenaphthene	430 U	350 U	480 U	690 U	770 U	460 U	360 U	350 U	340 U	360 U	370 U	370 U	340 U	340 U	350 U
Acenaphthylene	430 U	350 U	480 U	690 U	770 U	460 U	360 U	350 U	340 U	360 U	370 U	370 U	340 U	340 U	350 U
Acetophenone	430 U	350 U	480 U	690 U	770 U	460 U	360 U	350 U	340 U	360 U	370 U	370 U	340 U	340 U	350 U
Anthracene	430 U	350 U	480 U	690 U	770 U	460 U	360 U	350 U	340 U	360 U	370 U	370 U	340 U	340 U	350 U
Atrazine	430 U	350 U	480 U	690 U	770 U	460 U	360 U	350 U	340 U	360 U	370 U	370 U	340 U	340 U	350 U
Benzaldehyde	54 J	350 U	57 J	690 U	770 U	120 J	360 U	350 U	340 U	360 U	69 J	460	340 U	340 U	350 U
Benzo(a)anthracene	430 U	350 U	480 U	690 U	770 U	460 U	360 U	350 U	340 U	360 U	370 U	370 U	340 U	340 U	350 U
Benzo(a)pyrene	430 U	350 U	480 U	690 U	770 U	460 U	360 U	350 U	340 U	360 U	370 U	370 U	340 U	340 U	350 U
Benzo(b)fluoranthene	430 U	350 U	480 U	690 U	770 U	460 U	360 U	350 U	340 U	360 U	370 U	370 U	340 U	340 U	350 U
Benzo(g,h,i)perylene	430 U	350 U	480 U	690 U	770 U	460 U	360 U	350 U	340 U	360 U	370 U	370 U	340 U	340 U	350 U
Benzo(k)fluoranthene	430 U	350 U	480 U	690 U	770 U	460 U	360 U	350 U	340 U	360 U	370 U	370 U	340 U	340 U	350 U
Butylbenzylphthalate	430 U	350 U	480 U	690 U	770 U	460 U	360 U	350 U	340 U	360 U	370 U	370 U	340 U	340 U	350 U
Caprolactam	430 U	350 U	480 U	690 U	770 U	460 U	360 U	350 U	340 U	360 U	370 U	370 U	340 U	340 U	350 U
Carbazole	430 U	350 U	480 U	690 U	770 U	460 U	360 U	350 U	340 U	360 U	370 U	370 U	340 U	340 U	350 U
Chrysene	430 U	350 U	480 U	690 U	770 U	460 U	360 U	350 U	340 U	360 U	370 U	370 U	340 U	340 U	350 U
Di-n-butylphthalate	63 J	54 J	87 J	110 J	150 J	79 J	42 J	48 J	41 J	52 J	64 J	62 J	46 J	64 J	50 J
Di-n-octylphthalate	430 UJ	350 U	480 U	690 U	770 U	460 U	360 U	350 U	340 U	360 U	370 U	370 U	340 U	340 UJ	350 UJ
Dibenz(a,h)anthracene	430 U	350 U	480 U	690 U	770 U	460 U	360 U	350 U	340 U	360 U	370 U	370 U	340 U	340 U	350 U
Dibenzofuran	430 U	350 U	480 U	690 U	770 U	460 U	360 U	350 U	340 U	360 U	370 U	370 U	340 U	340 U	350 U
Diethylphthalate	430 U	350 U	480 U	690 U	770 U	460 U	360 U	350 U	340 U	360 U	370 U	370 U	340 U	340 U	350 U
Dimethyl phthalate	430 U	350 U	480 U	690 U	770 U	460 U	360 U	350 U	340 U	360 U	370 U	370 U	340 U	340 U	350 U
Fluoranthene	430 U	350 U	480 U	690 U	770 U	460 U	360 U	350 U	340 U	360 U	370 U	370 U	340 U	340 U	350 U
Fluorene	430 U	350 U	480 U	690 U	770 U	460 U	360 U	350 U	340 U	360 U	370 U	370 U	340 U	340 U	350 U
Hexachlorobenzene	430 U	350 U	480 U	690 U	770 U	460 U	360 U	350 U	340 U	360 U	370 U	370 U	340 U	340 U	350 U
Hexachlorobutadiene	430 U	350 U	480 U	690 U	770 U	460 U	360 U	350 U	340 U	360 U	370 U	370 U	340 U	340 U	350 U
Hexachlorocyclopentadiene	430 U	350 U	480 U	690 U	770 U	460 U	360 U	350 U	340 U	360 U	370 U	370 U	340 U	340 U	350 U
Hexachloroethane	430 U	350 U	480 U	690 U	770 U	460 U	360 U	350 U	340 U	360 U	370 U	370 U	340 U	340 U	350 U
Indeno(1,2,3-cd)pyrene	430 U	350 U	480 U	690 U	770 U	460 U	360 U	350 U	340 U	360 U	370 U	370 U	340 U	340 U	350 U
Isophorone	430 U	350 U	480 U	690 U	770 U	460 U	360 U	350 U	340 U	360 U	370 U	370 U	340 U	340 U	350 U
Naphthalene	430 U	350 U	480 U	690 U	770 U	460 U	360 U	350 U	340 U	360 U	370 U	370 U	340 U	340 U	350 U
Nitrobenzene	430 U	350 U	480 U	690 U	770 U	460 U	360 U	350 U	340 U	360 U	370 U	370 U	340 U	340 U	350 U
Pentachlorophenol	1,100 U	880 U	1,200 U	1,700 U	1,900 U	1,200 U	910 U	870 U	850 U	900 U	920 U	930 U	860 U	860 U	880 U
Phenanthrene	430 U	350 U	480 U	690 U	770 U	460 U	360 U	350 U	340 U	360 U	370 U	370 U	340 U	340 U	350 U
Phenol	430 U	350 U	480 U	690 U	770 U	460 U	360 U	350 U	340 U	360 U	370 U	370 U	340 U	340 U	350 U
Pyrene	430 U	350 U	480 U	690 U	770 U	460 U	360 U	350 U	340 U	360 U	370 U	370 U	340 U	340 U	350 U
bis(2-Chloroethoxy)methane	430 U	350 U	480 U	690 U	770 U	460 U	360 U	350 U	340 U	360 U	370 U	370 U	340 U	340 U	350 U
bis(2-Chloroethyl)ether	430 U	350 U	480 U	690 U	770 U	460 U	360 U	350 U	340 U	360 U	370 U	370 U	340 U	340 U	350 U
bis(2-Ethylhexyl)phthalate	240 J	160 J	290 J	320 J	290 J	200 J	130 J	210 J	330 J	460	410	1,600	1,100	150 J	78 J
n-Nitroso-di-n-propylamine	430 U	350 U	480 U	690 U	770 U	460 U	360 U	350 U	340 U	360 U	370 U	370 U	340 U	340 U	350 U
n-Nitrosodiphenylamine	430 U	350 U	480 U	690 U	770 U	460 U	360 U	350 U	340 U	360 U	370 U	370 U	340 U	340 U	350 U

Site 95
Surface Soil Raw Analytical Data
October 2006

Station ID	IR95A-IS100			IR95A-IS101		IR95A-IS102			IR95A-IS103	IR95A-IS104	IR95A-IS105	IR95A-IS106	IR95A-IS107	IR95A-IS108	IR95A-IS109
Sample ID	IR95A-IS100-0-1-06D-1	IR95A-IS100-0-1-06D-2	IR95A-IS100D-0-1-06D-2	IR95A-IS101-0-1-06D-1	IR95A-IS101-0-1-06D-2	IR95A-IS102-0-1-06D-1	IR95A-IS102D-0-1-06D-1	IR95A-IS102-0-1-06D-2	IR95A-IS103-0-1-06D-2	IR95A-IS104-0-1-06D-2	IR95A-IS105-0-1-06D-2	IR95A-IS106-0-1-06D-2	IR95A-IS107-0-1-06D-2	IR95A-IS108-0-1-06D-2	IR95A-IS109-0-1-06D-2
Sample Date	10/03/06	10/04/06	10/04/06	10/03/06	10/04/06	10/03/06	10/03/06	10/04/06	10/04/06	10/04/06	10/04/06	10/04/06	10/04/06	10/04/06	10/04/06
Chemical Name															
Pesticide/Polychlorinated Biphenyls (UG/KG)															
4,4'-DDD	NA	3.6 U	3.7 U	NA	3.6 U	NA	NA	3.5 J	3.7 U	3.5 U	4.2 U	3.9 U	4 U	4.2 U	2.1 J
4,4'-DDE	NA	3.6 U	3.7 U	NA	3.6 U	NA	NA	3.5 U	9.1	3.5 U	8.1 J	3.9 U	4 U	4.6 J	10 J
4,4'-DDT	NA	3.6 U	3.7 U	NA	3.6 U	NA	NA	3.5 U	3.3 J	3.5 U	4.5	3.9 U	4 U	4.2 U	3.2 J
Aldrin	NA	1.9 U	1.9 U	NA	1.9 U	NA	NA	1.8 U	1.9 U	1.8 U	2.2 U	2 U	2 U	2.2 U	2 U
Aroclor-1016	NA	36 U	37 U	NA	36 U	NA	NA	35 U	37 U	35 U	42 U	39 U	40 U	42 U	39 U
Aroclor-1221	NA	74 U	76 U	NA	74 U	NA	NA	71 U	75 U	72 U	86 U	79 U	81 U	85 U	80 U
Aroclor-1232	NA	36 U	37 U	NA	36 U	NA	NA	35 U	37 U	35 U	42 U	39 U	40 U	42 U	39 U
Aroclor-1242	NA	36 U	37 U	NA	36 U	NA	NA	35 U	37 U	35 U	42 U	39 U	40 U	42 U	39 U
Aroclor-1248	NA	36 U	37 U	NA	36 U	NA	NA	35 U	37 U	35 U	42 U	39 U	40 U	42 U	39 U
Aroclor-1254	NA	36 U	37 U	NA	36 U	NA	NA	35 U	37 U	35 U	42 U	39 U	40 U	42 U	39 U
Aroclor-1260	NA	36 U	37 U	NA	36 U	NA	NA	35 U	37 U	35 U	42 U	39 U	40 U	42 U	39 U
Dieldrin	NA	3.6 U	3.7 U	NA	3.6 U	NA	NA	3.5 U	3.7 U	3.5 U	4.2 U	3.9 U	4 U	4.2 U	3.9 U
Endosulfan I	NA	1.9 U	1.9 U	NA	1.9 U	NA	NA	1.8 U	1.9 U	1.8 U	2.2 U	2 U	2 U	2.2 U	2 U
Endosulfan II	NA	3.6 U	3.7 U	NA	3.6 U	NA	NA	3.5 U	3.7 U	3.5 U	4.2 U	3.9 U	4 U	4.2 U	3.9 U
Endosulfan sulfate	NA	3.6 U	3.7 U	NA	3.6 U	NA	NA	3.5 U	3.7 U	3.5 U	4.2 U	3.9 U	4 U	4.2 U	3.9 U
Endrin	NA	3.6 U	3.7 U	NA	3.6 U	NA	NA	3.5 U	3.7 U	3.5 U	12 J	3.9 U	4 U	4.2 U	4.6 J
Endrin aldehyde	NA	3.6 U	3.7 U	NA	3.6 U	NA	NA	3.5 U	3.7 U	3.5 U	4.2 U	3.9 U	4 U	4.2 U	3.9 U
Endrin ketone	NA	3.6 U	3.7 U	NA	3.6 U	NA	NA	3.5 U	3.7 U	3.5 U	4.2 U	3.9 U	4 U	4.2 U	3.9 U
Heptachlor	NA	1.9 U	1.9 U	NA	1.9 U	NA	NA	1.8 U	1.9 U	1.8 U	2.2 U	2 U	2 U	2.2 U	2 U
Heptachlor epoxide	NA	1.9 U	1.9 U	NA	1.9 U	NA	NA	1.8 U	1.9 U	1.8 U	2.2 U	2 U	2 U	2.2 U	2 U
Methoxychlor	NA	19 U	19 U	NA	19 U	NA	NA	18 U	19 U	18 U	22 U	20 U	20 U	22 U	20 U
Toxaphene	NA	190 U	190 U	NA	190 U	NA	NA	180 U	190 U	180 U	220 U	200 U	200 U	220 U	200 U
alpha-BHC	NA	1.9 U	1.9 U	NA	1.9 U	NA	NA	1.8 U	1.9 U	1.8 U	2.2 U	2 U	2 U	2.2 U	2 U
alpha-Chlordane	NA	1.9 U	1.9 U	NA	1.9 U	NA	NA	1.8 U	1.9 U	1.8 U	2.2 U	2 U	2 U	2.2 U	2 U
beta-BHC	NA	1.9 U	1.9 U	NA	1.9 U	NA	NA	1.8 U	1.9 U	1.8 U	2.2 U	2 U	2 U	2.2 U	2 U
delta-BHC	NA	1.9 U	1.9 U	NA	1.9 U	NA	NA	1.8 U	1.9 U	1.8 U	2.2 U	2 U	2 U	2.2 U	2 U
gamma-BHC (Lindane)	NA	1.9 U	1.9 U	NA	1.9 U	NA	NA	1.8 U	1.9 U	1.8 U	2.2 U	2 U	2 U	2.2 U	2 U
gamma-Chlordane	NA	1.9 U	1.9 U	NA	1.9 U	NA	NA	1.8 U	1.9 U	1.8 U	2.2 U	2 U	2 U	2.2 U	2 U
Total Metals (MG/KG)															
Aluminum	NA	2,900	3,420	NA	5,510	NA	NA	902	1,670	1,670	2,180	2,710	3,060	1,000	1,180
Antimony	NA	0.25 UJ	0.12 UJ	NA	4.6 UJ	NA	NA	4.4 UL	0.42 UJ	0.28 UJ	0.069 UJ	4.9 UJ	0.1 UJ	0.25 UJ	0.27 UJ
Arsenic	NA	0.54 J-	0.72 J-	NA	1 J-	NA	NA	0.11 J-	0.39 J-	0.3 J-	0.59 J-	0.69 J-	0.68 J-	0.22 J-	0.27 J-
Barium	NA	9.6 J	10 J	NA	11.5 J	NA	NA	7.8 J	9 J	9.7 J	7.6 J	9.5 J	11.9 J	8.1 J	7.6 J
Beryllium	NA	0.052 J	0.057 J	NA	0.074 J	NA	NA	0.031 J	0.041 J	0.033 J	0.041 J	0.04 J	0.047 J	0.027 J	0.025 J
Cadmium	NA	0.37 U	0.39 U	NA	0.38 U	NA	NA	0.11 U	0.04 U	0.044 U	0.033 U	0.0076 U	0.0067 U	0.049 U	0.014 U
Calcium	NA	327 J	369 J	NA	515	NA	NA	192 J	525	348 J	1,260	544	579	335 J	345 J
Chromium	NA	4	5.2	NA	7	NA	NA	1.6	4.6	2.3	3.2	3.9	4.3	2.3	2.1
Cobalt	NA	0.25 J	0.3 J	NA	0.34 J	NA	NA	0.097 U	0.22 J	0.16 U	0.25 J	0.27 J	0.3 J	0.29 J	0.17 J
Copper	NA	4.1 U	4.4 U	NA	6.2	NA	NA	12.4	3.6 U	4.1 U	3.6 U	3.8 U	5.9	20.7	4.5 U
Iron	NA	1,830	2,230	NA	3,380	NA	NA	483	1,220	816	1,460	2,160	2,110	988	921
Lead	NA	7.8	6.5	NA	8.4	NA	NA	3.9	27.5	4.6	6.5	7.2	9.7	25.3	19.9
Magnesium	NA	117 J	140 J	NA	214 J	NA	NA	44.2 J	123 J	89.1 J	102 J	151 J	171 J	109 J	93.5 J
Manganese	NA	11.4 J	11.5 J	NA	7.4 J	NA	NA	5.7 J	12.7 J	12.6 J	10.6 J	5.2 J	16.9 J	19.7 J	4.8 J
Mercury	NA	0.096 U	0.1 U	NA	0.096 U	NA	NA	0.089 U	0.094 U	0.094 U	0.024 J	0.033 J	0.029 J	0.027 J	0.1 U
Nickel	NA	0.9 J	1.1 J	NA	1.2 J	NA	NA	0.31 U	0.6 J	0.48 J	0.8 J	1.1 J	0.87 J	0.5 J	0.5 J
Potassium	NA	108 J	137 J	NA	196 J	NA	NA	50.3 U	87.4 U	64.5 U	87.2 U	120 J	136 J	79.9 U	77.1 U
Selenium	NA	0.51 U	0.55 U	NA	1 U	NA	NA	0.41 U	0.5 U	0.51 U	0.56 U	0.68 U	0.53 U	0.41 U	0.76 U
Silver	NA	0.043 J	0.77 U	NA	0.035 J	NA	NA	0.72 U	0.8 U	0.74 U	0.87 U	0.058 J	0.031 J	0.037 J	0.84 U
Sodium	NA	26.5 U	25.7 U	NA	36.5 J	NA	NA	13.5 U	24.9 U	25.7 U	31 U	30.7 U	30.3 U	28 U	37.1 J
Thallium	NA	0.22 U	0.25 U	NA	0.27 U	NA	NA	0.19 U	0.21 U	0.11 U	2.2 U	0.095 U	0.19 U	0.21 U	0.14 U
Vanadium	NA	5.4	6.7	NA	10	NA	NA	2.2 J	4.5	3.4 J	5.3	6.4	6.8	3.5 J	4.2 J
Zinc	NA	28.9	18.9	NA	21.7	NA	NA	75.6	10.3	7.7 U	6.7 U	7.3 U	21.9	16.7	7.5 U

Notes:
U- Analyte not detected
J- Reported value is estimated
J- - Reported value is biased low
UJ- Analyte not detected. Quantiation limit is imprecise
NA- Not analyzed
Shading represents detection

Site 95
Surface Soil Raw Analytical Data
October 2006

Station ID	IR95A-IS110	IR95A-IS111	IR95A-IS112	IR95A-IS113		IR95A-IS114	IR95A-IS115	IR95A-IS116	IR95A-IS117	IR95A-IS118	IR95A-IS119	IR95A-IS120	IR95A-IS121	IR95A-IS122	IR95A-IS123
Sample ID	IR95A-IS110-0-1-06D-2	IR95A-IS111-0-1-06D-2	IR95A-IS112-0-1-06D-2	IR95A-IS113-0-1-06D-2	IR95A-IS113D-0-1-06D-2	IR95A-IS114-0-1-06D-2	IR95A-IS115-0-1-06D-2	IR95A-IS116-0-1-06D-2	IR95A-IS117-0-1-06D-2	IR95A-IS118-0-1-06D-2	IR95A-IS119-0-1-06D-2	IR95A-IS120-0-1-06D-2	IR95A-IS121-0-1-06D-2	IR95A-IS122-0-1-06D-2	IR95A-IS123-0-1-06D-2
Sample Date	10/04/06	10/04/06	10/04/06	10/04/06	10/04/06	10/04/06	10/04/06	10/04/06	10/04/06	10/04/06	10/04/06	10/04/06	10/04/06	10/04/06	10/04/06
Chemical Name															
Pesticide/Polychlorinated Biphenyls (UG/KG)															
4,4'-DDD	4.3 U	3.5 U	4.8 U	6.8 U	7.6 U	4.6 U	3.6 U	3.5 U	3.4 U	3.6 U	3.6 U	3.7 U	3.4 U	3.4 U	3.5 U
4,4'-DDE	8.8 J	3.5 U	4.8 U	6.8 U	7.6 U	4.6 U	3.6 U	3.5 U	3.4 U	3.6 U	3.6 U	3.7 U	3.4 U	3.4 U	3.5 U
4,4'-DDT	2.6 J	3.5 U	4.8 U	6.8 U	7.6 U	4.6 U	3.6 U	3.5 U	3.4 U	3.6 U	3.6 U	3.7 U	3.4 U	3.4 U	3.5 U
Aldrin	2.2 U	1.8 U	2.5 U	3.5 U	3.9 U	2.4 U	1.9 U	1.8 U	1.7 U	1.9 U	1.9 U	1.9 U	1.8 U	1.8 U	1.8 U
Aroclor-1016	43 U	35 U	48 U	68 U	76 U	46 U	36 U	35 U	34 U	36 U	36 U	37 U	34 U	34 U	35 U
Aroclor-1221	87 U	71 U	97 U	140 U	150 U	93 U	73 U	70 U	69 U	73 U	74 U	75 U	70 U	70 U	71 U
Aroclor-1232	43 U	35 U	48 U	68 U	76 U	46 U	36 U	35 U	34 U	36 U	36 U	37 U	34 U	34 U	35 U
Aroclor-1242	43 U	35 U	48 U	68 U	76 U	46 U	36 U	35 U	34 U	36 U	36 U	37 U	34 U	34 U	35 U
Aroclor-1248	43 U	35 U	48 U	68 U	76 U	46 U	36 U	35 U	34 U	36 U	36 U	37 U	34 U	34 U	35 U
Aroclor-1254	43 U	35 U	48 U	68 U	76 U	46 U	36 U	35 U	34 U	36 U	36 U	37 U	34 U	34 U	35 U
Aroclor-1260	43 U	35 U	48 U	68 U	76 U	46 U	36 U	35 U	34 U	36 U	36 U	37 U	34 U	34 U	35 U
Dieldrin	4.3 U	3.5 U	4.8 U	6.8 U	7.6 U	4.6 U	3.6 U	3.5 U	3.4 U	3.6 U	3.6 U	3.7 U	3.4 U	3.4 U	3.5 U
Endosulfan I	2.2 U	1.8 U	2.5 U	3.5 U	3.9 U	2.4 U	1.9 U	1.8 U	1.7 U	1.9 U	1.9 U	1.9 U	1.8 U	1.8 U	1.8 U
Endosulfan II	4.3 U	3.5 U	4.8 U	6.8 U	7.6 U	4.6 U	3.6 U	3.5 U	3.4 U	3.6 U	3.6 U	3.7 U	3.4 U	3.4 U	3.5 U
Endosulfan sulfate	4.3 U	3.5 U	4.8 U	6.8 U	7.6 U	4.6 U	3.6 U	3.5 U	3.4 U	3.6 U	3.6 U	3.7 U	3.4 U	3.4 U	3.5 U
Endrin	4.3 U	3.5 U	4.8 U	6.8 U	7.6 U	4.6 U	3.6 U	3.5 U	3.4 U	3.6 U	3.6 U	3.7 U	3.4 U	3.4 U	3.5 U
Endrin aldehyde	4.3 U	3.5 U	4.8 U	6.8 U	7.6 U	4.6 U	3.6 U	3.5 U	3.4 U	3.6 U	3.6 U	3.7 U	3.4 U	3.4 U	3.5 U
Endrin ketone	4.3 U	3.5 U	4.8 U	6.8 U	7.6 U	3.1 J	3.6 U	3.5 U	3.4 U	3.6 U	3.6 U	3.2 J	3.4 U	3.4 U	3.5 U
Heptachlor	2.2 U	1.8 U	2.5 U	3.5 U	3.9 U	2.4 U	1.9 U	1.8 U	1.7 U	1.9 U	1.9 U	1.9 U	1.8 U	1.8 U	1.8 U
Heptachlor epoxide	2.2 U	1.8 U	2.5 U	3.5 U	3.9 U	2.4 U	1.9 U	1.8 U	1.7 U	1.9 U	1.9 U	1.9 U	1.8 U	1.8 U	1.8 U
Methoxychlor	22 U	18 U	25 U	35 U	39 U	24 U	19 U	18 U	17 U	19 U	19 U	19 U	18 U	18 U	18 U
Toxaphene	220 U	180 U	250 U	350 U	390 U	240 U	190 U	180 U	170 U	190 U	190 U	190 U	180 U	180 U	180 U
alpha-BHC	2.2 U	1.8 U	2.5 U	3.5 U	3.9 U	2.4 U	1.9 U	1.8 U	1.7 U	1.9 U	1.9 U	1.9 U	1.8 U	1.8 U	1.8 U
alpha-Chlordane	2.2 U	1.8 U	2.5 U	3.5 U	3.9 U	2.4 U	1.9 U	1.8 U	1.7 U	1.9 U	1.9 U	1.9 U	1.8 U	1.8 U	1.8 U
beta-BHC	2.2 U	1.8 U	2.5 U	3.5 U	3.9 U	2.4 U	1.9 U	1.8 U	1.7 U	1.9 U	1.9 U	1.9 U	1.8 U	1.8 U	1.8 U
delta-BHC	2.2 U	1.8 U	2.5 U	3.5 U	3.9 U	2.4 U	1.9 U	1.8 U	1.7 U	1.9 U	1.9 U	1.9 U	1.8 U	1.8 U	1.8 U
gamma-BHC (Lindane)	2.2 U	1.8 U	2.5 U	3.5 U	3.9 U	2.4 U	1.9 U	1.8 U	1.7 U	1.9 U	1.9 U	1.9 U	1.8 U	1.8 U	1.8 U
gamma-Chlordane	2.2 U	1.8 U	2.5 U	3.5 U	3.9 U	2.4 U	1.9 U	1.8 U	1.7 U	1.9 U	1.9 U	1.9 U	1.8 U	1.8 U	1.8 U
Total Metals (MG/KG)															
Aluminum	1,840	1,400	4,240	5,680	4,350	6,300	3,680	1,650	1,120	7,510	5,700	4,850	669	4,510	1,270
Antimony	0.053 UJ	0.078 UJ	0.09 UJ	9 UJ	10 UJ	0.57 UJ	0.19 UJ	0.046 UJ	0.06 UJ	4.5 UJ	4.6 UJ	4.5 UJ	4.5 UJ	4.4 UJ	0.056 UJ
Arsenic	0.51 J-	0.53 J	1.2	2.5	2.7	1.9	0.79	0.32 J	0.21 J	1.4	1.2	0.9	0.098 J	0.35 J-	0.17 J-
Barium	13.6 J	8 J	17.1 J	33.6	25.8 J	21.5	7.6 J	5.2 J	3.9 J	16.8	13.6 J	13.9 J	2.2 J	34.2	4 J
Beryllium	0.054 J	0.041 J	0.076 J	0.12 J	0.079 J	0.1 J	0.054 J	0.032 J	0.024 J	0.096 J	0.086 J	0.076 J	0.019 J	0.2 J	0.027 J
Cadmium	0.033 U	0.36 U	0.51 U	0.73 U	0.81 U	0.48 U	0.37 U	0.37 U	0.36 U	0.37 U	0.38 U	0.37 U	0.36 U	0.36 U	0.36 U
Calcium	1,080	291 J	1,130	734	824	1,390	611	384	223 J	367 J	998	1,670	65.5 J	1,830	264 J
Chromium	2.8	2.4	5.6	7.4	8	7.5	4.7	2.4	2.2	8.3	6.8	6.1	1.7	4.1	1.9
Cobalt	0.34 J	0.22 J	0.51 J	0.54 J	0.81 J	0.62 J	0.19 J	0.17 J	0.18 J	0.59 J	0.43 J	0.4 J	0.11 J	1.1 J	0.15 U
Copper	4.7 U	3.6 U	4.4 U	16	22.7	6.5	3.1 U	3.1 U	2.6 U	3.9 U	4.5 U	4.3 U	2.7 U	5.9	3.7 U
Iron	1,830	1,050	2,770	6,690	9,390	3,610	2,050	860	630	4,180	3,270	2,720	385	4,260	623
Lead	25.6	7.7	8.9	140	137	13.3	4.7	3.3	3	5.5	6.5	6.3	2.1	2.4	2.7
Magnesium	210 J	104 J	240 J	379 J	372 J	316 J	143 J	83.1 J	64.5 J	260 J	225 J	231 J	38.1 J	1,890	71.7 J
Manganese	9.5 J	27	11.8	9.5	17.4	27	12.3	11.6	14.8	9.7	6.8	11.6	2.2	62.7 J	6.2 J
Mercury	0.034 J	0.024 U	0.047 U	0.1 J	0.18 J	0.078 U	0.024 U	0.096 U	0.09 U	0.027 U	0.027 U	0.038 U	0.083 U	0.087 U	0.1 U
Nickel	0.93 J	0.49 J	1.3 J	2.5 J	4.7 J	1.8 J	1 J	0.54 J	0.37 J	1.7 J	1.4 J	1.5 J	0.3 U	1.9 J	0.46 J
Potassium	123 J	80.1 J	165 J	238 J	227 J	240 J	132 J	73.5 J	64.9 U	213 J	162 J	162 J	47.3 U	831	70.3 U
Selenium	0.92 U	0.4 U	0.67 U	0.85 U	1.7 U	3.4 U	0.84 U	0.31 U	0.27 U	2.6 U	2.7 U	2.6 U	0.28 U	2.6 U	0.46 U
Silver	0.92 U	0.72 U	1 U	1.5 U	1.7 U	0.97 U	0.74 U	0.74 U	0.71 U	0.75 U	0.77 U	0.75 U	0.74 U	0.039 J	0.72 U
Sodium	64.2 J	22.3 U	49.4 J	103 J	119 J	47.4 J	18 U	14.9 U	11.4 U	23.2 U	37.5 J	48.4 J	10 U	860	30.7 U
Thallium	0.11 U	0.38 U	0.45 U	0.6 U	1.4 U	0.99 U	0.5 U	0.17 U	0.15 U	0.35 U	0.55 U	1.9 U	0.11 U	1.9 U	1.8 U
Vanadium	5.5	3.9	8.2	11.8	10.4	11.2	7	3.4 J	2.5 J	12.1	9.8	8.4	1.6 J	9	2.7 J
Zinc	16.6	7.5 U	12.9	14.4 U	21.9	18.2	4.3 U	3.8 U	3.3 U	5.2 U	6.7 U	9.2	5 U	10.4	6.2 U

Notes:
U- Analyte not detected
J- Reported value is estimated
J- - Reported value is biased low
UJ- Analyte not detected. Quantiation limit is imprecise
NA- Not analyzed
Shading represents detection

CTO-105
Site 95 Magnolia Rd
Groundwater Raw Analytical Data
MCB Camp Lejeune, North Carolina
August 2006

Station ID	IR95B-MW01	IR95B-MW02	IR95B-MW03
Sample ID	IR95B-GW01-06C	IR95B-GW02-06C	IR95B-GW03-06C
Sample Date	08/01/06	08/01/06	08/01/06
Chemical Name			
VOCs (UG/L)			
1,1,1-Trichloroethane	0.5 U	0.5 U	0.5 U
1,1,2,2-Tetrachloroethane	0.5 U	0.5 U	0.5 U
1,1,2-Trichloro-1,2,2-trifluoroethane(Freon-113)	0.5 U	0.5 U	0.5 U
1,1,2-Trichloroethane	0.5 U	0.5 UJ	0.5 UJ
1,1-Dichloroethane	0.5 U	0.5 U	0.5 U
1,1-Dichloroethene	0.5 U	0.5 U	0.5 U
1,2,3-Trichlorobenzene	0.5 U	0.5 U	0.5 U
1,2,4-Trichlorobenzene	0.5 U	0.5 U	0.5 U
1,2-Dibromo-3-chloropropane	0.5 U	0.5 U	0.5 U
1,2-Dibromoethane	0.5 U	0.5 U	0.5 U
1,2-Dichlorobenzene	0.5 U	0.5 U	0.5 U
1,2-Dichloroethane	0.5 U	0.5 U	0.5 U
1,2-Dichloropropane	0.5 UJ	0.5 UJ	0.5 UJ
1,3-Dichlorobenzene	0.5 U	0.5 U	0.5 U
1,4-Dichlorobenzene	0.5 U	0.5 U	0.5 U
2-Butanone	5 U	5 U	5 U
2-Hexanone	5 U	5 U	5 U
4-Methyl-2-pentanone	5 U	5 U	5 U
Acetone	5 UJ	5 UJ	6.6 UJ
Benzene	0.5 U	0.5 U	0.5 U
Bromochloromethane	0.5 U	0.5 U	0.5 U
Bromodichloromethane	0.5 UJ	0.5 UJ	0.5 UJ
Bromoform	0.5 U	0.5 U	0.5 U
Bromomethane	0.5 U	0.5 U	0.5 U
Carbon disulfide	0.5 U	0.5 U	0.5 U
Carbon tetrachloride	0.5 U	0.5 U	0.5 U
Chlorobenzene	0.5 U	0.5 U	0.5 U
Chloroethane	0.5 U	0.5 U	0.5 U
Chloroform	0.5 U	0.5 U	0.5 U
Chloromethane	0.5 U	0.5 U	0.5 U
Cyclohexane	0.5 UJ	0.5 UJ	0.5 UJ
Dibromochloromethane	0.5 U	0.5 U	0.5 U
Dichlorodifluoromethane (Freon-12)	0.5 UJ	0.5 UJ	0.5 UJ
Ethylbenzene	0.5 U	0.5 U	0.5 U
Methyl acetate	0.5 U	0.5 U	0.5 U
Methyl-tert-butyl ether (MTBE)	0.5 U	0.5 U	0.5 U
Methylcyclohexane	0.5 UJ	0.5 UJ	0.5 UJ
Methylene chloride	0.5 U	0.5 U	0.5 U
Styrene	0.5 U	0.5 U	0.5 U
Tetrachloroethene	0.5 U	0.5 U	0.5 U
Toluene	0.5 U	0.5 U	0.5 U
Trichloroethene	0.5 U	0.5 U	0.5 U
Trichlorofluoromethane(Freon-11)	0.5 U	0.5 U	0.5 U
Vinyl chloride	0.5 U	0.5 U	0.5 U
cis-1,2-Dichloroethene	0.5 U	0.5 U	0.5 U
cis-1,3-Dichloropropene	0.5 U	0.5 UJ	0.5 UJ
isopropylbenzene	0.5 U	0.5 U	0.5 U
trans-1,2-Dichloroethene	0.5 U	0.5 U	0.5 U
trans-1,3-Dichloropropene	0.5 U	0.5 UJ	0.5 UJ
SVOCs (UG/L)			
1,1-Biphenyl	5 U	5 U	5 U
1,2,4,5-Tetrachlorobenzene	5 U	5 U	5 U
2,2'-oxybis(1-chloropropane)	5 U	5 U	5 U
2,4,5-Trichlorophenol	20 U	20 U	20 U
2,4,6-Trichlorophenol	5 U	5 U	5 U
2,4-Dichlorophenol	5 U	5 U	5 U
2,4-Dimethylphenol	5 UJ	5 U	5 U
2,4-Dinitrophenol	20 U	20 U	20 U
2,4-Dinitrotoluene	5 U	5 U	5 U
2,6-Dinitrotoluene	5 U	5 U	5 U
2-Chloronaphthalene	5 U	5 U	5 U
2-Chlorophenol	5 U	5 U	5 U
2-Methylnaphthalene	5 U	5 U	5 U

CTO-105
Site 95 Magnolia Rd
Groundwater Raw Analytical Data
MCB Camp Lejeune, North Carolina
August 2006

Station ID	IR95B-MW01	IR95B-MW02	IR95B-MW03
Sample ID	IR95B-GW01-06C	IR95B-GW02-06C	IR95B-GW03-06C
Sample Date	08/01/06	08/01/06	08/01/06
Chemical Name			
2-Methylphenol	5 UJ	5 U	5 U
2-Nitroaniline	20 U	20 U	20 U
2-Nitrophenol	5 U	5 U	5 U
3,3'-Dichlorobenzidine	5 R	5 U	5 U
3-Nitroaniline	20 U	20 U	20 U
4,6-Dinitro-2-methylphenol	20 U	20 U	20 U
4-Bromophenyl-phenylether	5 U	5 U	5 U
4-Chloro-3-methylphenol	5 U	5 U	5 U
4-Chloroaniline	5 R	5 U	5 U
4-Chlorophenyl-phenylether	5 U	5 U	5 U
4-Methylphenol	5 UJ	5 U	5 U
4-Nitroaniline	20 U	20 U	20 U
4-Nitrophenol	20 U	20 U	20 U
Acenaphthene	5 U	5 U	5 U
Acenaphthylene	5 U	5 U	5 U
Acetophenone	5 U	5 U	5 U
Anthracene	5 R	5 U	5 U
Atrazine	5 R	5 U	5 U
Benzaldehyde	5 U	5 U	5 U
Benzo(a)anthracene	5 U	5 U	5 U
Benzo(a)pyrene	5 UJ	5 U	5 U
Benzo(b)fluoranthene	5 UJ	5 U	5 U
Benzo(g,h,i)perylene	5 UJ	5 U	5 U
Benzo(k)fluoranthene	5 UJ	5 U	5 U
Butylbenzylphthalate	5 U	5 U	5 U
Caprolactam	5 U	5 U	5 U
Chrysene	5 U	5 U	5 U
Di-n-butylphthalate	5 U	5 U	5 U
Di-n-octylphthalate	5 U	5 U	5 U
Dibenz(a,h)anthracene	5 UJ	5 U	5 U
Dibenzofuran	5 U	5 U	5 U
Diethylphthalate	5 U	5 U	5 U
Dimethyl phthalate	5 U	5 U	5 U
Fluoranthene	5 U	5 U	5 U
Fluorene	5 U	5 U	5 U
Hexachlorobenzene	5 R	5 U	5 U
Hexachlorobutadiene	5 U	5 U	5 U
Hexachlorocyclopentadiene	5 R	5 U	5 U
Hexachloroethane	5 U	5 U	5 U
Indeno(1,2,3-cd)pyrene	5 UJ	5 U	5 U
Isophorone	5 U	5 U	5 U
Naphthalene	5 U	5 U	5 U
Nitrobenzene	5 U	5 U	5 U
Pentachlorophenol	5 U	5 U	5 U
Phenanthrene	5 R	5 U	5 U
Phenol	5 U	5 U	5 U
Pyrene	5 U	5 U	5 U
bis(2-Chloroethoxy)methane	5 U	5 U	5 U
bis(2-Chloroethyl)ether	5 U	5 U	5 U
bis(2-Ethylhexyl)phthalate	5 U	5 U	5 U
n-Nitroso-di-n-propylamine	5 U	5 U	5 U
n-Nitrosodiphenylamine	5 U	5 U	5 U
PEST/PCBs (UG/L)			
4,4'-DDD	0.02 U	0.02 U	0.02 U
4,4'-DDE	0.02 U	0.02 U	0.02 U
4,4'-DDT	0.02 U	0.02 U	0.02 U
Aldrin	0.01 U	0.01 U	0.01 U
Aroclor-1016	0.2 U	0.2 U	0.2 U
Aroclor-1221	0.4 U	0.4 U	0.4 U
Aroclor-1232	0.2 U	0.2 U	0.2 U
Aroclor-1242	0.2 U	0.2 U	0.2 U
Aroclor-1248	0.2 U	0.2 U	0.2 U
Aroclor-1254	0.2 U	0.2 U	0.2 U
Aroclor-1260	0.2 U	0.2 U	0.2 U
Dieldrin	0.02 U	0.02 U	0.02 U

CTO-105
Site 95 Magnolia Rd
Groundwater Raw Analytical Data
MCB Camp Lejeune, North Carolina
August 2006

Station ID	IR95B-MW01	IR95B-MW02	IR95B-MW03
Sample ID	IR95B-GW01-06C	IR95B-GW02-06C	IR95B-GW03-06C
Sample Date	08/01/06	08/01/06	08/01/06
Chemical Name			
Endosulfan I	0.01 U	0.01 U	0.01 U
Endosulfan II	0.02 U	0.02 U	0.02 U
Endosulfan sulfate	0.02 U	0.02 U	0.02 U
Endrin	0.02 U	0.02 U	0.02 U
Endrin aldehyde	0.02 U	0.02 U	0.02 U
Endrin ketone	0.02 U	0.02 U	0.02 U
Heptachlor	0.01 U	0.01 U	0.01 U
Heptachlor epoxide	0.01 U	0.01 U	0.01 U
Methoxychlor	0.1 U	0.1 U	0.1 U
Toxaphene	1 U	1 U	1 U
alpha-BHC	0.01 U	0.01 U	0.01 U
alpha-Chlordane	0.01 U	0.01 U	0.01 U
beta-BHC	0.01 U	0.01 U	0.01 U
delta-BHC	0.0068 J	0.01 U	0.01 U
gamma-BHC (Lindane)	0.01 U	0.01 U	0.01 U
gamma-Chlordane	0.01 U	0.01 U	0.01 U
Total Metals (UG/L)			
Aluminum	290	300	365
Antimony	1.4 J	1.5 J	60 U
Arsenic	10 U	10 U	10 U
Barium	200 U	200 U	200 U
Beryllium	5 U	5 U	5 U
Cadmium	0.12 J	5 U	5 U
Calcium	5,000 U	5,000 U	5,000 U
Chromium	10 U	10 U	10 U
Cobalt	50 U	50 U	50 U
Copper	25 U	25 U	25 U
Iron	1,020	35.6 J	66.2 J
Lead	10 U	10 U	10 U
Magnesium	5,000 U	5,000 U	5,000 U
Manganese	15 U	15 U	17.1
Mercury	0.26 U	0.26 U	0.26 U
Nickel	40 U	40 U	40 U
Potassium	1,290 J	929 J	1,030 J
Selenium	35 U	35 U	35 U
Silver	0.92 J	10 U	10 U
Sodium	9,460	8,840	8,510
Thallium	25 U	25 U	25 U
Vanadium	50 U	50 U	50 U
Zinc	60 U	60 U	60 U
Wet Chemistry (MG/L)			
Alkalinity	20 U	20 U	20 U
Chloride	13	17	14
Ethane	0.026 U	0.026 U	0.026 U
Ethene	0.035 U	0.035 U	0.035 U
Ferric iron	10 UJ	10 UJ	10 UJ
Ferrous iron	1 UJ	1 UJ	1 UJ
Methane	0.014 U	0.014 U	0.014 U
Nitrate	0.13 UJ	0.13 UJ	0.13 UJ
Nitrite	0.13 U	0.13 U	0.13 U
Sulfate	14	14	14
Sulfide	0.03 U	0.03 U	0.03 U
Total organic carbon (TOC)	11	10 U	10 U

Notes:
U- Analyte not detected
J- Reported value is estimated
UJ- Analyte not detected. Quantitation limit is imprecise
R- Unreliable result
Shading represents detection
VOCs- Volatile Organic Compounds
SVOCs- Semi- Volatile Organic Compounds
PEST/PCBs- Pesticides/Polychlorinated Biphenyls

MCB Camp Lejeune
Site 95 Subsurface Soil Exceedances of Screening Criteria
October 2006

Station ID	BaseWide Background 2002	Region IX PRGs - Residential Soil	NCSSL (May2005)	IR95B-IS101	IR95B-IS103	IR95B-IS105	IR95B-IS107	IR95B-IS109		IR95B-IS111	IR95B-IS113	IR95B-IS114	IR95B-IS115	
Sample ID				IR95B-IS101-3-4-06D-2	IR95B-IS103-3-4-06D-2	IR95B-IS105-3-4-06D-2	IR95B-IS107-3-4-06D-2	IR95B-IS109-3-4-06D-2	IR95B-IS109D-3-4-06D-2	IR95B-IS111-3-4-06D-2	IR95B-IS113-3-4-06D-2	IR95B-IS114-3-4-06D-1	IR95B-IS115-3-4-06D-1	IR95B-IS115-3-4-06D-2
Sample Date				10/05/06	10/05/06	10/05/06	10/05/06	10/05/06	10/05/06	10/05/06	10/05/06	10/03/06	10/03/06	10/05/06
Chemical Name														
VOCs (UG/KG)														
2-Butanone	--	22,000,000	17,100	NA	NA	NA	NA	NA	NA	NA	NA	10 U	10 U	NA
Acetone	--	14,000,000	2,810	NA	NA	NA	NA	NA	NA	NA	NA	10 U	10 U	NA
Methylene chloride	--	9,100	20.2	NA	NA	NA	NA	NA	NA	NA	NA	10 U	10 U	NA
SVOCs (UG/KG)														
Caprolactam	--	31,000,000	--	390 U	380 U	380 U	380 U	400 U	400 U	380 U	380 U	NA	NA	380 U
Di-n-butylphthalate	--	6,100,000	24,800	390 U	380 U	380 U	380 U	400 U	400 U	62 J	58 J	NA	NA	72 J
bis(2-Ethylhexyl)phthalate	--	35,000	6,670	73 J	47 U	66 U	61 U	230 U	170 U	110 U	100 U	NA	NA	400 U
PEST/PCBs (UG/KG)														
4,4'-DDE	--	1,700	--	3.9 U	3.9 U	3.8 U	3.8 U	4 U	4 U	3.8 U	3.8 U	NA	NA	3.8 U
4,4'-DDT	--	1,700	1,360	3.9 U	3.9 U	3.8 U	3.8 U	4 U	4 U	3.8 U	3.8 U	NA	NA	3.8 U
Endrin aldehyde	--	18,000	--	3.9 U	3.9 U	3.8 U	3.8 U	4 U	4 U	3.8 U	3.8 U	NA	NA	3.8 U
Methoxychlor	--	310,000	56,100	20 U	20 U	20 U	20 U	21 U	21 U	19 U	19 U	NA	NA	20 U
Total Metals (MG/KG)														
Aluminum	13,061	76,000	--	12,900 J	13,200	10,200	12,200	10,400	9,840	10,200 J	10,400 J	NA	NA	10,500 J
Antimony	0.392	31	5.42	0.39 UJ	0.56 UJ	0.61 UJ	0.66 UJ	0.37 UJ	0.24 UJ	0.41 UJ	0.11 UJ	NA	NA	1.2 J
Arsenic	5.29	0.39	5.24	***3.6 J-***	***4.7***	***2***	***1.7***	***76.2***	***45.2***	***6.7***	1 U	NA	NA	***436***
Barium	37.34	5,400	848	13.1 J	16.3	11.9 J	13.7 J	16.4 J	19.9	11.5 J	12.6 J	NA	NA	16.9
Beryllium	0.432	150	3.38	0.13 J	0.16 J	0.13 J	0.14 J	0.097 J	0.097 J	0.13 J	0.095 J	NA	NA	0.1 J
Cadmium	--	37	0.95	0.41 UJ	0.42 U	0.42 U	0.42 U	0.44 U	0.43 U	0.32 J	0.029 U	NA	NA	0.063 U
Calcium	944	--	--	410 UJ	284 J	742	24.2 U	859	888	113 J	141 J	NA	NA	806
Chromium	30.9	30	27.2	18.5 J	20.9	15.1	18.1	14.6	12.3	17 J	11.6 J	NA	NA	11.8 J
Cobalt	2.33	900	--	0.45 J	0.58 J	0.45 J	0.55 J	0.37 J	0.33 J	1.1 J	0.6 J	NA	NA	0.69 J
Copper	7.03	3,100	704	4.1 U	4.4 U	3.9 U	4 U	7.5	4.4 U	4.8 U	4.4 U	NA	NA	4.3 U
Iron	16,984	23,000	151	6,570 J	6,690	3,890	4,950	5,750	3,610	7,190 J	2,310 J	NA	NA	3,110 J
Lead	12.6	400	270	7.8 J	7.9 J	6.4 J	7.2 J	7.7 J	7.6 J	6.5	6.7	NA	NA	13.2
Magnesium	1,022	--	--	584 J	565	562	550	457	427 J	399 J	412 J	NA	NA	486 J
Manganese	23.6	1,800	65.2	8.6 J	7.7 J	6.9 J	7.8 J	11.8 J	12.5 J	6.1 J	6.2 J	NA	NA	12.9 J
Mercury	0.096	23	0.015	0.098 U	0.11 U	0.093 U	0.1 U	0.017 J	0.028 J	0.032 U	0.03 U	NA	NA	0.09 U
Nickel	4.73	1,600	56.4	1.9 J	1.9 J	1.5 J	1.8 J	1.6 J	1.6 J	1.5 J	1.6 J	NA	NA	1.8 J
Potassium	1,043	--	--	747 J	621 J	563 J	643 J	409 J	393 J	459 J	358 J	NA	NA	460 J
Silver	0.18	390	0.217	0.82 U	0.84 U	0.03 J	0.83 U	0.89 U	0.051 J	0.17 U	0.033 U	NA	NA	0.016 U
Sodium	--	--	--	163 J	40.6 U	35.9 U	37.1 U	41.2 U	41.3 U	32.5 U	27.9 U	NA	NA	33.4 U
Vanadium	44.7	78	--	25.6 J	29.7	19.9	24.2	20.2	15.9	25.5	14	NA	NA	15.3
Zinc	21.5	23,000	550	6.9 U	7.5 U	5.6 U	6.6 U	18.4	21.9	6.1 U	5.7 U	NA	NA	11

Notes:

Shading Exceeds NCSSLs (North Carolina Soil Screening Levels)

Bold Frame Exceeds Basewide Background Concentrations

Bold and Italicized Exceeds Region IX PRGs

U- Analyte not detected

J- Reported value is estimated

J- - Reported value is biased low

UJ- Analyte not detected. Quantiation limit is imprecise

NA- Not analyzed

VOCs- Volatile Organic Compounds

SVOCs- Semi-Volatile Organic Compounds

PEST/PCBs- Pesticide/Polychlorinated Biphenyls

MCB Camp Lejeune
Site 95 Subsurface Soil Exceedances of Screening Criteria
October 2006

Station ID	BaseWide Background 2002	Region IX PRGs - Residential Soil	NCSSL (May2005)	IR95B-IS116		IR95B-IS117		IR95B-IS119	IR95B-IS121	IR95B-IS123	IR95B-IS125	IR95B-IS127		IR95B-IS129
Sample ID				IR95B-IS116-3-4-06D-1	IR95B-IS116D-3-4-06D-1	IR95B-IS117-3-4-06D-2	IR95B-IS117D-3-4-06D-2	IR95B-IS119-3-4-06D-2	IR95B-IS121-3-4-06D-2	IR95B-IS123-3-4-06D-2	IR95B-IS125-3-4-06D-2	IR95B-IS127-3-4-06D-2	IR95B-IS127D-3-4-06D-2	IR95B-IS129-3-4-06D-2
Sample Date				10/03/06	10/03/06	10/05/06	10/05/06	10/05/06	10/05/06	10/05/06	10/05/06	10/05/06	10/05/06	10/05/06
Chemical Name														
VOCs (UG/KG)														
2-Butanone	--	22,000,000	17,100	11 U	46	NA	NA	NA	NA	NA	NA	NA	NA	NA
Acetone	--	14,000,000	2,810	11 U	7 J	NA	NA	NA	NA	NA	NA	NA	NA	NA
Methylene chloride	--	9,100	20.2	11 U	2 J	NA	NA	NA	NA	NA	NA	NA	NA	NA
SVOCs (UG/KG)														
Caprolactam	--	31,000,000	--	NA	NA	380 U	380 U	380 U	390 U	390 U	380 U	380 U	390 U	380 U
Di-n-butylphthalate	--	6,100,000	24,800	NA	NA	61 J	73 J	44 J	390 U	390 U	62 J	380 U	54 J	43 J
bis(2-Ethylhexyl)phthalate	--	35,000	6,670	NA	NA	300 U	170 U	130 U	120 U	110 U	200 U	120 U	420	110 U
PEST/PCBs (UG/KG)														
4,4'-DDE	--	1,700	--	NA	NA	3.8 U	3.8 U	3.8 U	3.9 U	3.9 U	3.8 U	3.8 U	3.9 U	3.8 U
4,4'-DDT	--	1,700	1,360	NA	NA	3.8 U	3.8 U	3.8 U	3.9 U	3.9 U	3.8 U	3.8 U	3.9 U	3.8 U
Endrin aldehyde	--	18,000	--	NA	NA	3.8 U	3.8 U	3.8 U	3.9 U	3.9 U	3.8 U	3.8 U	3.9 U	3.8 U
Methoxychlor	--	310,000	56,100	NA	NA	19 U	19 U	20 U	20 U	20 U	19 U	20 U	20 U	19 U
Total Metals (MG/KG)														
Aluminum	13,061	76,000	--	NA	NA	7,860 J	8,400 J	8,120 J	11,400 J	11,000 J	11,700 J	12,000 J	11,100	7,510 J
Antimony	0.392	31	5.42	NA	NA	0.14 UJ	0.13 UJ	0.29 UJ	0.29 UJ	0.25 UJ	0.31 UJ	0.19 UJ	0.46 UJ	0.18 UJ
Arsenic	5.29	0.39	5.24	NA	NA	1.3 U	1.2 U	***6.1***	***5.8***	***2.6***	***2***	***3.1***	***3.6***	***1.7***
Barium	37.34	5,400	848	NA	NA	9.4 J	9.9 J	9.8 J	13.9 J	14.5 J	16.2	13.5 J	12.5 J	8.3 J
Beryllium	0.432	150	3.38	NA	NA	0.099 J	0.073 J	0.1 J	0.14 J	0.12 J	0.12 J	0.14 J	0.056 J	0.082 J
Cadmium	--	37	0.95	NA	NA	0.4 U	0.39 U	0.39 U	0.41 U	0.39 U	0.39 U	0.4 U	0.31 J	0.41 U
Calcium	944	--	--	NA	NA	514	433	80.4 J	80.1 J	118 J	118 J	158 J	248 J	107 J
Chromium	30.9	30	27.2	NA	NA	5.8 J	5.9 J	13.5 J	20.4 J	15.2 J	14.7 J	18.5 J	19.4	10.2 J
Cobalt	2.33	900	--	NA	NA	0.37 J	0.39 J	0.94 J-	1.4 J-	0.88 J-	0.91 J-	0.97 J-	1.1 J	0.51 J-
Copper	7.03	3,100	704	NA	NA	3.9 U	4.3 U	4.7 U	4.9 U	4.5 U	5.1 U	5.2 U	6 U	4.3 U
Iron	16,984	23,000	151	NA	NA	1,670 J	1,760 J	7,160 J	11,200 J	5,320 J	5,240 J	5,910 J	6,900	2,780 J
Lead	12.6	400	270	NA	NA	4.9	4.7	5.2	7.5	6.7	7.1	7.1	6.7	6
Magnesium	1,022	--	--	NA	NA	259 J	281 J	319 J	444 J	444 J	473 J	494 J	444	323 J
Manganese	23.6	1,800	65.2	NA	NA	5.7 J	5.9 J	5.1 J	5.8 J	6.7 J	7.4 J	7.1 J	6.1	5 J
Mercury	0.096	23	0.015	NA	NA	0.048 U	0.035 U	0.027 U	0.037 U	0.032 U	0.032 U	0.026 U	0.027 U	0.027 U
Nickel	4.73	1,600	56.4	NA	NA	1.4 J	1.5 J	1.2 J	1.5 J	1.5 J	1.8 J	1.7 J	2.2 J	1.2 J
Potassium	1,043	--	--	NA	NA	193 J	202 J	430 J	515 J	461 J	449 J	553 J	461 J	367 J
Silver	0.18	390	0.217	NA	NA	0.8 U	0.77 U	0.13 U	0.072 U	0.039 U	0.019 U	0.79 U	0.2 U	0.023 U
Sodium	--	--	--	NA	NA	38.6 U	41.2 U	36.4 U	35.1 U	37.5 U	43.2 U	63.6 U	42.8 U	32.3 U
Vanadium	44.7	78	--	NA	NA	6.8	7.6	20.5	27.8	20.6	20	23.1	22.9 J	12.9
Zinc	21.5	23,000	550	NA	NA	4.4 U	4.5 U	5.4 U	6.9 U	7 U	6.8 U	7.7 U	9.7 U	6.5 U

Notes:

Shading Exceeds NCSSLs (North Carolina Soil Screening Levels)

Bold Frame Exceeds Basewide Background Concentrations

Bold and Italicized Exceeds Region IX PRGs

U- Analyte not detected

J- Reported value is estimated

J- - Reported value is biased low

UJ- Analyte not detected. Quantiation limit is imprecise

NA- Not analyzed

VOCs- Volatile Organic Compounds

SVOCs- Semi-Volatile Organic Compounds

PEST/PCBs- Pesticide/Polychlorinated Biphenyls

Station ID	IR95A-IS100	IR95A-IS101			IR95A-IS102	IR95A-IS103	IR95A-IS115	IR95A-IS117	IR95A-IS119		IR95A-IS121	IR95A-IS123	IR95B-IS101	IR95B-IS103	IR95B-IS105
Sample ID	IR95A-IS100-3-4-06D-1	IR95A-IS101-3-4-06D-1	IR95A-IS101-3-4-06D-2	IR95A-IS101D-3-4-06D-2	IR95A-IS102-3-4-06D-1	IR95A-IS103-3-4-06D-2	IR95A-IS115-3-4-06D-2	IR95A-IS117-3-4-06D-2	IR95A-IS119-3-4-06D-2	IR95A-IS119D-3-4-06D-2	IR95A-IS121-3-4-06D-2	IR95A-IS123-3-4-06D-2	IR95B-IS101-3-4-06D-2	IR95B-IS103-3-4-06D-2	IR95B-IS105-3-4-06D-2
Sample Date	10/03/06	10/03/06	10/04/06	10/04/06	10/03/06	10/04/06	10/04/06	10/04/06	10/04/06	10/04/06	10/04/06	10/04/06	10/05/06	10/05/06	10/05/06
Chemical Name															
Volatile Organic Compounds (UG/KG)															
1,1,1-Trichloroethane	11 U	11 U	NA	NA	14 U	NA	NA	NA	NA	NA	NA	NA	NA	NA	NA
1,1,2,2-Tetrachloroethane	11 U	11 U	NA	NA	14 U	NA	NA	NA	NA	NA	NA	NA	NA	NA	NA
1,1,2-Trichloro-1,2,2-trifluoroethane(Freon-113)	11 U	11 U	NA	NA	14 U	NA	NA	NA	NA	NA	NA	NA	NA	NA	NA
1,1,2-Trichloroethane	11 U	11 U	NA	NA	14 U	NA	NA	NA	NA	NA	NA	NA	NA	NA	NA
1,1-Dichloroethane	11 U	11 U	NA	NA	14 U	NA	NA	NA	NA	NA	NA	NA	NA	NA	NA
1,1-Dichloroethene	11 U	11 U	NA	NA	14 U	NA	NA	NA	NA	NA	NA	NA	NA	NA	NA
1,2,4-Trichlorobenzene	11 U	11 U	NA	NA	14 U	NA	NA	NA	NA	NA	NA	NA	NA	NA	NA
1,2-Dibromo-3-chloropropane	11 U	11 U	NA	NA	14 U	NA	NA	NA	NA	NA	NA	NA	NA	NA	NA
1,2-Dibromoethane	11 U	11 U	NA	NA	14 U	NA	NA	NA	NA	NA	NA	NA	NA	NA	NA
1,2-Dichlorobenzene	11 U	11 U	NA	NA	14 U	NA	NA	NA	NA	NA	NA	NA	NA	NA	NA
1,2-Dichloroethane	11 U	11 U	NA	NA	14 U	NA	NA	NA	NA	NA	NA	NA	NA	NA	NA
1,2-Dichloropropane	11 U	11 U	NA	NA	14 U	NA	NA	NA	NA	NA	NA	NA	NA	NA	NA
1,3-Dichlorobenzene	11 U	11 U	NA	NA	14 U	NA	NA	NA	NA	NA	NA	NA	NA	NA	NA
1,4-Dichlorobenzene	11 U	11 U	NA	NA	14 U	NA	NA	NA	NA	NA	NA	NA	NA	NA	NA
2-Butanone	11 U	11 U	NA	NA	14 U	NA	NA	NA	NA	NA	NA	NA	NA	NA	NA
2-Hexanone	11 U	11 U	NA	NA	14 U	NA	NA	NA	NA	NA	NA	NA	NA	NA	NA
4-Methyl-2-pentanone	11 U	11 U	NA	NA	14 U	NA	NA	NA	NA	NA	NA	NA	NA	NA	NA
Acetone	11 U	11 U	NA	NA	14 U	NA	NA	NA	NA	NA	NA	NA	NA	NA	NA
Benzene	11 U	11 U	NA	NA	14 U	NA	NA	NA	NA	NA	NA	NA	NA	NA	NA
Bromodichloromethane	11 U	11 U	NA	NA	14 U	NA	NA	NA	NA	NA	NA	NA	NA	NA	NA
Bromoform	11 U	11 U	NA	NA	14 U	NA	NA	NA	NA	NA	NA	NA	NA	NA	NA
Bromomethane	11 U	11 U	NA	NA	14 U	NA	NA	NA	NA	NA	NA	NA	NA	NA	NA
Carbon disulfide	11 U	11 U	NA	NA	14 U	NA	NA	NA	NA	NA	NA	NA	NA	NA	NA
Carbon tetrachloride	11 U	11 U	NA	NA	14 U	NA	NA	NA	NA	NA	NA	NA	NA	NA	NA
Chlorobenzene	11 U	11 U	NA	NA	14 U	NA	NA	NA	NA	NA	NA	NA	NA	NA	NA
Chloroethane	11 U	11 U	NA	NA	14 U	NA	NA	NA	NA	NA	NA	NA	NA	NA	NA
Chloroform	11 U	11 U	NA	NA	14 U	NA	NA	NA	NA	NA	NA	NA	NA	NA	NA
Chloromethane	11 U	11 U	NA	NA	14 U	NA	NA	NA	NA	NA	NA	NA	NA	NA	NA
Cyclohexane	11 U	11 U	NA	NA	14 U	NA	NA	NA	NA	NA	NA	NA	NA	NA	NA
Dibromochloromethane	11 U	11 U	NA	NA	14 U	NA	NA	NA	NA	NA	NA	NA	NA	NA	NA
Dichlorodifluoromethane (Freon-12)	11 U	11 U	NA	NA	14 U	NA	NA	NA	NA	NA	NA	NA	NA	NA	NA
Ethylbenzene	11 U	11 U	NA	NA	14 U	NA	NA	NA	NA	NA	NA	NA	NA	NA	NA
Isopropylbenzene	11 U	11 U	NA	NA	14 U	NA	NA	NA	NA	NA	NA	NA	NA	NA	NA
Methyl acetate	11 UJ	11 U	NA	NA	14 U	NA	NA	NA	NA	NA	NA	NA	NA	NA	NA
Methyl-tert-butyl ether (MTBE)	11 U	11 U	NA	NA	14 U	NA	NA	NA	NA	NA	NA	NA	NA	NA	NA
Methylcyclohexane	11 U	11 U	NA	NA	14 U	NA	NA	NA	NA	NA	NA	NA	NA	NA	NA
Methylene chloride	11 U	11 U	NA	NA	14 U	NA	NA	NA	NA	NA	NA	NA	NA	NA	NA
Styrene	11 U	11 U	NA	NA	14 U	NA	NA	NA	NA	NA	NA	NA	NA	NA	NA
Tetrachloroethene	11 U	11 U	NA	NA	14 U	NA	NA	NA	NA	NA	NA	NA	NA	NA	NA
Toluene	11 U	11 U	NA	NA	14 U	NA	NA	NA	NA	NA	NA	NA	NA	NA	NA
Trichloroethene	11 U	11 U	NA	NA	14 U	NA	NA	NA	NA	NA	NA	NA	NA	NA	NA
Trichlorofluoromethane(Freon-11)	11 UJ	11 U	NA	NA	14 U	NA	NA	NA	NA	NA	NA	NA	NA	NA	NA
Vinyl chloride	11 U	11 U	NA	NA	14 U	NA	NA	NA	NA	NA	NA	NA	NA	NA	NA
Xylene, total	11 U	11 U	NA	NA	14 U	NA	NA	NA	NA	NA	NA	NA	NA	NA	NA
cis-1,2-Dichloroethene	11 U	11 U	NA	NA	14 U	NA	NA	NA	NA	NA	NA	NA	NA	NA	NA
cis-1,3-Dichloropropene	11 U	11 U	NA	NA	14 U	NA	NA	NA	NA	NA	NA	NA	NA	NA	NA
trans-1,2-Dichloroethene	11 U	11 U	NA	NA	14 U	NA	NA	NA	NA	NA	NA	NA	NA	NA	NA
trans-1,3-Dichloropropene	11 U	11 U	NA	NA	14 U	NA	NA	NA	NA	NA	NA	NA	NA	NA	NA

Station ID	IR95B-IS107	IR95B-IS109		IR95B-IS111	IR95B-IS113	IR95B-IS114	IR95B-IS115		IR95B-IS116		IR95B-IS117		IR95B-IS119	IR95B-IS121	IR95B-IS123
Sample ID	IR95B-IS107-3-4-06D-2	IR95B-IS109-3-4-06D-2	IR95B-IS109D-3-4-06D-2	IR95B-IS111-3-4-06D-2	IR95B-IS113-3-4-06D-2	IR95B-IS114-3-4-06D-1	IR95B-IS115-3-4-06D-1	IR95B-IS115-3-4-06D-2	IR95B-IS116-3-4-06D-1	IR95B-IS116D-3-4-06D-1	IR95B-IS117-3-4-06D-2	IR95B-IS117D-3-4-06D-2	IR95B-IS119-3-4-06D-2	IR95B-IS121-3-4-06D-2	IR95B-IS123-3-4-06D
Sample Date	10/05/06	10/05/06	10/05/06	10/05/06	10/05/06	10/03/06	10/03/06	10/05/06	10/03/06	10/03/06	10/05/06	10/05/06	10/05/06	10/05/06	10/05/06
Chemical Name															
Volatile Organic Compounds (UG/KG)															
1,1,1-Trichloroethane	NA	NA	NA	NA	NA	10 U	10 U	NA	11 U	13 U	NA	NA	NA	NA	NA
1,1,2,2-Tetrachloroethane	NA	NA	NA	NA	NA	10 U	10 U	NA	11 U	13 U	NA	NA	NA	NA	NA
1,1,2-Trichloro-1,2,2-trifluoroethane(Freon-113)	NA	NA	NA	NA	NA	10 U	10 U	NA	11 U	13 U	NA	NA	NA	NA	NA
1,1,2-Trichloroethane	NA	NA	NA	NA	NA	10 U	10 U	NA	11 U	13 U	NA	NA	NA	NA	NA
1,1-Dichloroethane	NA	NA	NA	NA	NA	10 U	10 U	NA	11 U	13 U	NA	NA	NA	NA	NA
1,1-Dichloroethene	NA	NA	NA	NA	NA	10 U	10 U	NA	11 U	13 U	NA	NA	NA	NA	NA
1,2,4-Trichlorobenzene	NA	NA	NA	NA	NA	10 U	10 U	NA	11 U	13 U	NA	NA	NA	NA	NA
1,2-Dibromo-3-chloropropane	NA	NA	NA	NA	NA	10 U	10 U	NA	11 U	13 U	NA	NA	NA	NA	NA
1,2-Dibromoethane	NA	NA	NA	NA	NA	10 U	10 U	NA	11 U	13 U	NA	NA	NA	NA	NA
1,2-Dichlorobenzene	NA	NA	NA	NA	NA	10 U	10 U	NA	11 U	13 U	NA	NA	NA	NA	NA
1,2-Dichloroethane	NA	NA	NA	NA	NA	10 U	10 U	NA	11 U	13 U	NA	NA	NA	NA	NA
1,2-Dichloropropane	NA	NA	NA	NA	NA	10 U	10 U	NA	11 U	13 U	NA	NA	NA	NA	NA
1,3-Dichlorobenzene	NA	NA	NA	NA	NA	10 U	10 U	NA	11 U	13 U	NA	NA	NA	NA	NA
1,4-Dichlorobenzene	NA	NA	NA	NA	NA	10 U	10 U	NA	11 U	13 U	NA	NA	NA	NA	NA
2-Butanone	NA	NA	NA	NA	NA	10 U	10 U	NA	11 U	46	NA	NA	NA	NA	NA
2-Hexanone	NA	NA	NA	NA	NA	10 U	10 U	NA	11 U	13 U	NA	NA	NA	NA	NA
4-Methyl-2-pentanone	NA	NA	NA	NA	NA	10 U	10 U	NA	11 U	13 U	NA	NA	NA	NA	NA
Acetone	NA	NA	NA	NA	NA	10 U	10 U	NA	11 U	7 J	NA	NA	NA	NA	NA
Benzene	NA	NA	NA	NA	NA	10 U	10 U	NA	11 U	13 U	NA	NA	NA	NA	NA
Bromodichloromethane	NA	NA	NA	NA	NA	10 U	10 U	NA	11 U	13 U	NA	NA	NA	NA	NA
Bromoform	NA	NA	NA	NA	NA	10 U	10 U	NA	11 U	13 U	NA	NA	NA	NA	NA
Bromomethane	NA	NA	NA	NA	NA	10 U	10 U	NA	11 U	13 U	NA	NA	NA	NA	NA
Carbon disulfide	NA	NA	NA	NA	NA	10 U	10 U	NA	11 U	13 U	NA	NA	NA	NA	NA
Carbon tetrachloride	NA	NA	NA	NA	NA	10 U	10 U	NA	11 U	13 U	NA	NA	NA	NA	NA
Chlorobenzene	NA	NA	NA	NA	NA	10 U	10 U	NA	11 U	13 U	NA	NA	NA	NA	NA
Chloroethane	NA	NA	NA	NA	NA	10 U	10 U	NA	11 U	13 U	NA	NA	NA	NA	NA
Chloroform	NA	NA	NA	NA	NA	10 U	10 U	NA	11 U	13 U	NA	NA	NA	NA	NA
Chloromethane	NA	NA	NA	NA	NA	10 U	10 U	NA	11 U	13 U	NA	NA	NA	NA	NA
Cyclohexane	NA	NA	NA	NA	NA	10 U	10 U	NA	11 U	13 U	NA	NA	NA	NA	NA
Dibromochloromethane	NA	NA	NA	NA	NA	10 U	10 U	NA	11 U	13 U	NA	NA	NA	NA	NA
Dichlorodifluoromethane (Freon-12)	NA	NA	NA	NA	NA	10 U	10 U	NA	11 U	13 U	NA	NA	NA	NA	NA
Ethylbenzene	NA	NA	NA	NA	NA	10 U	10 U	NA	11 U	13 U	NA	NA	NA	NA	NA
Isopropylbenzene	NA	NA	NA	NA	NA	10 U	10 U	NA	11 U	13 U	NA	NA	NA	NA	NA
Methyl acetate	NA	NA	NA	NA	NA	10 UJ	10 UJ	NA	11 UJ	13 UJ	NA	NA	NA	NA	NA
Methyl-tert-butyl ether (MTBE)	NA	NA	NA	NA	NA	10 U	10 U	NA	11 U	13 U	NA	NA	NA	NA	NA
Methylcyclohexane	NA	NA	NA	NA	NA	10 U	10 U	NA	11 U	13 U	NA	NA	NA	NA	NA
Methylene chloride	NA	NA	NA	NA	NA	10 U	10 U	NA	11 U	2 J	NA	NA	NA	NA	NA
Styrene	NA	NA	NA	NA	NA	10 U	10 U	NA	11 U	13 U	NA	NA	NA	NA	NA
Tetrachloroethene	NA	NA	NA	NA	NA	10 U	10 U	NA	11 U	13 U	NA	NA	NA	NA	NA
Toluene	NA	NA	NA	NA	NA	10 U	10 U	NA	11 U	13 U	NA	NA	NA	NA	NA
Trichloroethene	NA	NA	NA	NA	NA	10 U	10 U	NA	11 U	13 U	NA	NA	NA	NA	NA
Trichlorofluoromethane(Freon-11)	NA	NA	NA	NA	NA	10 UJ	10 UJ	NA	11 UJ	13 UJ	NA	NA	NA	NA	NA
Vinyl chloride	NA	NA	NA	NA	NA	10 U	10 U	NA	11 U	13 U	NA	NA	NA	NA	NA
Xylene, total	NA	NA	NA	NA	NA	10 U	10 U	NA	11 U	13 U	NA	NA	NA	NA	NA
cis-1,2-Dichloroethene	NA	NA	NA	NA	NA	10 U	10 U	NA	11 U	13 U	NA	NA	NA	NA	NA
cis-1,3-Dichloropropene	NA	NA	NA	NA	NA	10 U	10 U	NA	11 U	13 U	NA	NA	NA	NA	NA
trans-1,2-Dichloroethene	NA	NA	NA	NA	NA	10 U	10 U	NA	11 U	13 U	NA	NA	NA	NA	NA
trans-1,3-Dichloropropene	NA	NA	NA	NA	NA	10 U	10 U	NA	11 U	13 U	NA	NA	NA	NA	NA

Station ID		IR95B-IS125	IR95B-IS127		IR95B-IS129	IR95C-IS100	IR95C-IS101		IR95C-IS102	IR95C-IS103	IR95C-IS105	IR95C-IS107	IR95C-IS109	IR95C-IS111	IR95C-IS113	
Sample ID	2	IR95B-IS125-3-4-06D-2	IR95B-IS127-3-4-06D-2	IR95B-IS127D-3-4-06D-2	IR95B-IS129-3-4-06D-2	IR95C-IS100-3-4-06D-1	IR95C-IS101-3-4-06D-1	IR95C-IS101-3-4-06D-2	IR95C-IS102-3-4-06D-1	IR95C-IS103-3-4-06D-2	IR95C-IS105-3-4-06D-2	IR95C-IS107-3-4-06D-2	IR95C-IS109-3-4-06D-2	IR95C-IS111-3-4-06D-2	IR95C-IS113-3-4-06D-2	IR95C-IS113D-3-4-06D
Sample Date		10/05/06	10/05/06	10/05/06	10/05/06	10/03/06	10/03/06	10/03/06	10/03/06	10/03/06	10/03/06	10/03/06	10/03/06	10/03/06	10/03/06	10/03/06
Chemical Name																
Volatile Organic Compounds (UG/KG)																
1,1,1-Trichloroethane		NA	NA	NA	NA	12 U	11 U	NA	10 U	NA	NA	NA	NA	NA	NA	NA
1,1,2,2-Tetrachloroethane		NA	NA	NA	NA	12 U	11 U	NA	10 U	NA	NA	NA	NA	NA	NA	NA
1,1,2-Trichloro-1,2,2-trifluoroethane(Freon-113)		NA	NA	NA	NA	12 U	11 U	NA	10 U	NA	NA	NA	NA	NA	NA	NA
1,1,2-Trichloroethane		NA	NA	NA	NA	12 U	11 U	NA	10 U	NA	NA	NA	NA	NA	NA	NA
1,1-Dichloroethane		NA	NA	NA	NA	12 U	11 U	NA	10 U	NA	NA	NA	NA	NA	NA	NA
1,1-Dichloroethene		NA	NA	NA	NA	12 U	11 U	NA	10 U	NA	NA	NA	NA	NA	NA	NA
1,2,4-Trichlorobenzene		NA	NA	NA	NA	12 U	11 U	NA	10 U	NA	NA	NA	NA	NA	NA	NA
1,2-Dibromo-3-chloropropane		NA	NA	NA	NA	12 U	11 U	NA	10 U	NA	NA	NA	NA	NA	NA	NA
1,2-Dibromoethane		NA	NA	NA	NA	12 U	11 U	NA	10 U	NA	NA	NA	NA	NA	NA	NA
1,2-Dichlorobenzene		NA	NA	NA	NA	12 U	11 U	NA	10 U	NA	NA	NA	NA	NA	NA	NA
1,2-Dichloroethane		NA	NA	NA	NA	12 U	11 U	NA	10 U	NA	NA	NA	NA	NA	NA	NA
1,2-Dichloropropane		NA	NA	NA	NA	12 U	11 U	NA	10 U	NA	NA	NA	NA	NA	NA	NA
1,3-Dichlorobenzene		NA	NA	NA	NA	12 U	11 U	NA	10 U	NA	NA	NA	NA	NA	NA	NA
1,4-Dichlorobenzene		NA	NA	NA	NA	12 U	11 U	NA	10 U	NA	NA	NA	NA	NA	NA	NA
2-Butanone		NA	NA	NA	NA	12 U	11 U	NA	10 U	NA	NA	NA	NA	NA	NA	NA
2-Hexanone		NA	NA	NA	NA	12 U	11 U	NA	10 U	NA	NA	NA	NA	NA	NA	NA
4-Methyl-2-pentanone		NA	NA	NA	NA	12 U	11 U	NA	10 U	NA	NA	NA	NA	NA	NA	NA
Acetone		NA	NA	NA	NA	12 U	11 U	NA	10 U	NA	NA	NA	NA	NA	NA	NA
Benzene		NA	NA	NA	NA	12 U	11 U	NA	10 U	NA	NA	NA	NA	NA	NA	NA
Bromodichloromethane		NA	NA	NA	NA	12 U	11 U	NA	10 U	NA	NA	NA	NA	NA	NA	NA
Bromoform		NA	NA	NA	NA	12 U	11 U	NA	10 U	NA	NA	NA	NA	NA	NA	NA
Bromomethane		NA	NA	NA	NA	12 U	11 U	NA	10 U	NA	NA	NA	NA	NA	NA	NA
Carbon disulfide		NA	NA	NA	NA	12 U	11 U	NA	10 U	NA	NA	NA	NA	NA	NA	NA
Carbon tetrachloride		NA	NA	NA	NA	12 U	11 U	NA	10 U	NA	NA	NA	NA	NA	NA	NA
Chlorobenzene		NA	NA	NA	NA	12 U	11 U	NA	10 U	NA	NA	NA	NA	NA	NA	NA
Chloroethane		NA	NA	NA	NA	12 U	11 U	NA	10 U	NA	NA	NA	NA	NA	NA	NA
Chloroform		NA	NA	NA	NA	12 U	11 U	NA	10 U	NA	NA	NA	NA	NA	NA	NA
Chloromethane		NA	NA	NA	NA	12 U	11 U	NA	10 U	NA	NA	NA	NA	NA	NA	NA
Cyclohexane		NA	NA	NA	NA	12 U	11 U	NA	10 U	NA	NA	NA	NA	NA	NA	NA
Dibromochloromethane		NA	NA	NA	NA	12 U	11 U	NA	10 U	NA	NA	NA	NA	NA	NA	NA
Dichlorodifluoromethane (Freon-12)		NA	NA	NA	NA	12 U	11 U	NA	10 U	NA	NA	NA	NA	NA	NA	NA
Ethylbenzene		NA	NA	NA	NA	12 U	11 U	NA	10 U	NA	NA	NA	NA	NA	NA	NA
Isopropylbenzene		NA	NA	NA	NA	12 U	11 U	NA	10 U	NA	NA	NA	NA	NA	NA	NA
Methyl acetate		NA	NA	NA	NA	12 UJ	11 UJ	NA	10 UJ	NA	NA	NA	NA	NA	NA	NA
Methyl-tert-butyl ether (MTBE)		NA	NA	NA	NA	12 U	11 U	NA	10 U	NA	NA	NA	NA	NA	NA	NA
Methylcyclohexane		NA	NA	NA	NA	12 U	11 U	NA	10 U	NA	NA	NA	NA	NA	NA	NA
Methylene chloride		NA	NA	NA	NA	12 U	11 U	NA	10 U	NA	NA	NA	NA	NA	NA	NA
Styrene		NA	NA	NA	NA	12 U	11 U	NA	10 U	NA	NA	NA	NA	NA	NA	NA
Tetrachloroethene		NA	NA	NA	NA	12 U	11 U	NA	10 U	NA	NA	NA	NA	NA	NA	NA
Toluene		NA	NA	NA	NA	12 U	11 U	NA	10 U	NA	NA	NA	NA	NA	NA	NA
Trichloroethene		NA	NA	NA	NA	12 U	11 U	NA	10 U	NA	NA	NA	NA	NA	NA	NA
Trichlorofluoromethane(Freon-11)		NA	NA	NA	NA	12 UJ	11 UJ	NA	10 UJ	NA	NA	NA	NA	NA	NA	NA
Vinyl chloride		NA	NA	NA	NA	12 U	11 U	NA	10 U	NA	NA	NA	NA	NA	NA	NA
Xylene, total		NA	NA	NA	NA	12 U	11 U	NA	10 U	NA	NA	NA	NA	NA	NA	NA
cis-1,2-Dichloroethene		NA	NA	NA	NA	12 U	11 U	NA	10 U	NA	NA	NA	NA	NA	NA	NA
cis-1,3-Dichloropropene		NA	NA	NA	NA	12 U	11 U	NA	10 U	NA	NA	NA	NA	NA	NA	NA
trans-1,2-Dichloroethene		NA	NA	NA	NA	12 U	11 U	NA	10 U	NA	NA	NA	NA	NA	NA	NA
trans-1,3-Dichloropropene		NA	NA	NA	NA	12 U	11 U	NA	10 U	NA	NA	NA	NA	NA	NA	NA

Station ID		IR95C-IS115	IR95C-IS117	IR95C-IS119	IR95C-IS121	IR95C-IS123		IR95C-IS125	IR95C-IS127
Sample ID	2	IR95C-IS115-3-4-06D-2	IR95C-IS117-3-4-06D-2	IR95C-IS119-3-4-06D-2	IR95C-IS121-3-4-06D-2	IR95C-IS123-3-4-06D-2	IR95C-IS123D-3-4-06D-2	IR95C-IS125-3-4-06D-2	IR95C-IS127-3-4-06D-2
Sample Date		10/03/06	10/03/06	10/03/06	10/03/06	10/03/06	10/03/06	10/03/06	10/03/06
Chemical Name									
Volatile Organic Compounds (UG/KG)									
1,1,1-Trichloroethane		NA	NA	NA	NA	NA	NA	NA	NA
1,1,2,2-Tetrachloroethane		NA	NA	NA	NA	NA	NA	NA	NA
1,1,2-Trichloro-1,2,2-trifluoroethane(Freon-113)		NA	NA	NA	NA	NA	NA	NA	NA
1,1,2-Trichloroethane		NA	NA	NA	NA	NA	NA	NA	NA
1,1-Dichloroethane		NA	NA	NA	NA	NA	NA	NA	NA
1,1-Dichloroethene		NA	NA	NA	NA	NA	NA	NA	NA
1,2,4-Trichlorobenzene		NA	NA	NA	NA	NA	NA	NA	NA
1,2-Dibromo-3-chloropropane		NA	NA	NA	NA	NA	NA	NA	NA
1,2-Dibromoethane		NA	NA	NA	NA	NA	NA	NA	NA
1,2-Dichlorobenzene		NA	NA	NA	NA	NA	NA	NA	NA
1,2-Dichloroethane		NA	NA	NA	NA	NA	NA	NA	NA
1,2-Dichloropropane		NA	NA	NA	NA	NA	NA	NA	NA
1,3-Dichlorobenzene		NA	NA	NA	NA	NA	NA	NA	NA
1,4-Dichlorobenzene		NA	NA	NA	NA	NA	NA	NA	NA
2-Butanone		NA	NA	NA	NA	NA	NA	NA	NA
2-Hexanone		NA	NA	NA	NA	NA	NA	NA	NA
4-Methyl-2-pentanone		NA	NA	NA	NA	NA	NA	NA	NA
Acetone		NA	NA	NA	NA	NA	NA	NA	NA
Benzene		NA	NA	NA	NA	NA	NA	NA	NA
Bromodichloromethane		NA	NA	NA	NA	NA	NA	NA	NA
Bromoform		NA	NA	NA	NA	NA	NA	NA	NA
Bromomethane		NA	NA	NA	NA	NA	NA	NA	NA
Carbon disulfide		NA	NA	NA	NA	NA	NA	NA	NA
Carbon tetrachloride		NA	NA	NA	NA	NA	NA	NA	NA
Chlorobenzene		NA	NA	NA	NA	NA	NA	NA	NA
Chloroethane		NA	NA	NA	NA	NA	NA	NA	NA
Chloroform		NA	NA	NA	NA	NA	NA	NA	NA
Chloromethane		NA	NA	NA	NA	NA	NA	NA	NA
Cyclohexane		NA	NA	NA	NA	NA	NA	NA	NA
Dibromochloromethane		NA	NA	NA	NA	NA	NA	NA	NA
Dichlorodifluoromethane (Freon-12)		NA	NA	NA	NA	NA	NA	NA	NA
Ethylbenzene		NA	NA	NA	NA	NA	NA	NA	NA
Isopropylbenzene		NA	NA	NA	NA	NA	NA	NA	NA
Methyl acetate		NA	NA	NA	NA	NA	NA	NA	NA
Methyl-tert-butyl ether (MTBE)		NA	NA	NA	NA	NA	NA	NA	NA
Methylcyclohexane		NA	NA	NA	NA	NA	NA	NA	NA
Methylene chloride		NA	NA	NA	NA	NA	NA	NA	NA
Styrene		NA	NA	NA	NA	NA	NA	NA	NA
Tetrachloroethene		NA	NA	NA	NA	NA	NA	NA	NA
Toluene		NA	NA	NA	NA	NA	NA	NA	NA
Trichloroethene		NA	NA	NA	NA	NA	NA	NA	NA
Trichlorofluoromethane(Freon-11)		NA	NA	NA	NA	NA	NA	NA	NA
Vinyl chloride		NA	NA	NA	NA	NA	NA	NA	NA
Xylene, total		NA	NA	NA	NA	NA	NA	NA	NA
cis-1,2-Dichloroethene		NA	NA	NA	NA	NA	NA	NA	NA
cis-1,3-Dichloropropene		NA	NA	NA	NA	NA	NA	NA	NA
trans-1,2-Dichloroethene		NA	NA	NA	NA	NA	NA	NA	NA
trans-1,3-Dichloropropene		NA	NA	NA	NA	NA	NA	NA	NA

Station ID	IR95A-IS100	IR95A-IS101			IR95A-IS102	IR95A-IS103	IR95A-IS115	IR95A-IS117	IR95A-IS119		IR95A-IS121	IR95A-IS123	IR95B-IS101	IR95B-IS103	IR95B-IS105
Sample ID	IR95A-IS100-3-4-06D-1	IR95A-IS101-3-4-06D-1	IR95A-IS101-3-4-06D-2	IR95A-IS101D-3-4-06D-2	IR95A-IS102-3-4-06D-1	IR95A-IS103-3-4-06D-2	IR95A-IS115-3-4-06D-2	IR95A-IS117-3-4-06D-2	IR95A-IS119-3-4-06D-2	IR95A-IS119D-3-4-06D-2	IR95A-IS121-3-4-06D-2	IR95A-IS123-3-4-06D-2	IR95B-IS101-3-4-06D-2	IR95B-IS103-3-4-06D-2	IR95B-IS105-3-4-06D-2
Sample Date	10/03/06	10/03/06	10/04/06	10/04/06	10/03/06	10/04/06	10/04/06	10/04/06	10/04/06	10/04/06	10/04/06	10/04/06	10/05/06	10/05/06	10/05/06
Chemical Name															
Semi-volatile Organic Compounds (UG/KG)															
1,1-Biphenyl	NA	NA	360 U	390 U	NA	370 U	380 U	420 U	340 U	350 U	390 U	370 U	390 U	380 U	380 U
2,2'-Oxybis(1-chloropropane)	NA	NA	360 U	390 U	NA	370 U	380 U	420 U	340 U	350 U	390 U	370 U	390 U	380 U	380 U
2,4,5-Trichlorophenol	NA	NA	900 U	980 U	NA	930 U	940 U	1,100 U	860 U	880 U	980 U	930 U	970 U	970 U	960 U
2,4,6-Trichlorophenol	NA	NA	360 U	390 U	NA	370 U	380 U	420 U	340 U	350 U	390 U	370 U	390 U	380 U	380 U
2,4-Dichlorophenol	NA	NA	360 U	390 U	NA	370 U	380 U	420 U	340 U	350 U	390 U	370 U	390 U	380 U	380 U
2,4-Dimethylphenol	NA	NA	360 U	390 U	NA	370 U	380 U	420 U	340 U	350 U	390 U	370 U	390 U	380 U	380 U
2,4-Dinitrophenol	NA	NA	900 UJ	980 UJ	NA	930 UJ	940 UJ	1,100 UJ	860 UJ	880 UJ	980 UJ	930 UJ	970 R	970 R	960 R
2,4-Dinitrotoluene	NA	NA	360 U	390 U	NA	370 U	380 U	420 U	340 U	350 U	390 U	370 U	390 U	380 U	380 U
2,6-Dinitrotoluene	NA	NA	360 U	390 U	NA	370 U	380 U	420 U	340 U	350 U	390 U	370 U	390 U	380 U	380 U
2-Chloronaphthalene	NA	NA	360 U	390 U	NA	370 U	380 U	420 U	340 U	350 U	390 U	370 U	390 U	380 U	380 U
2-Chlorophenol	NA	NA	360 U	390 U	NA	370 U	380 U	420 U	340 U	350 U	390 U	370 U	390 U	380 U	380 U
2-Methylnaphthalene	NA	NA	360 U	390 U	NA	370 U	380 U	420 U	340 U	350 U	390 U	370 U	390 U	380 U	380 U
2-Methylphenol	NA	NA	360 U	390 U	NA	370 U	380 U	420 U	340 U	350 U	390 U	370 U	390 U	380 U	380 U
2-Nitroaniline	NA	NA	900 U	980 U	NA	930 U	940 U	1,100 U	860 U	880 U	980 U	930 U	970 U	970 U	960 U
2-Nitrophenol	NA	NA	360 U	390 U	NA	370 U	380 U	420 U	340 U	350 U	390 U	370 U	390 U	380 U	380 U
3,3'-Dichlorobenzidine	NA	NA	360 U	390 UJ	NA	370 UJ	380 U	420 U	340 U	350 U	390 UJ	370 UJ	390 UJ	380 U	380 UJ
3-Nitroaniline	NA	NA	900 U	980 U	NA	930 U	940 U	1,100 U	860 U	880 U	980 U	930 U	970 U	970 U	960 U
4,6-Dinitro-2-methylphenol	NA	NA	900 U	980 UJ	NA	930 UJ	940 UJ	1,100 UJ	860 UJ	880 UJ	980 UJ	930 UJ	970 UJ	970 UJ	960 UJ
4-Bromophenyl-phenylether	NA	NA	360 U	390 U	NA	370 U	380 U	420 U	340 U	350 U	390 U	370 U	390 U	380 U	380 U
4-Chloro-3-methylphenol	NA	NA	360 U	390 U	NA	370 U	380 U	420 U	340 U	350 U	390 U	370 U	390 U	380 U	380 U
4-Chloroaniline	NA	NA	360 U	390 U	NA	370 U	380 U	420 U	340 U	350 U	390 U	370 U	390 UJ	380 U	380 U
4-Chlorophenyl-phenylether	NA	NA	360 U	390 U	NA	370 U	380 U	420 U	340 U	350 U	390 U	370 U	390 U	380 U	380 U
4-Methylphenol	NA	NA	360 U	390 U	NA	370 U	380 U	420 U	340 U	350 U	390 U	370 U	390 U	380 U	380 U
4-Nitroaniline	NA	NA	900 UJ	980 UJ	NA	930 UJ	940 U	1,100 U	860 U	880 U	980 UJ	930 UJ	970 UJ	970 U	960 UJ
4-Nitrophenol	NA	NA	900 U	980 U	NA	930 U	940 U	1,100 U	860 U	880 U	980 U	930 U	970 UJ	970 U	960 UJ
Acenaphthene	NA	NA	360 U	390 U	NA	370 U	380 U	420 U	340 U	350 U	390 U	370 U	390 U	380 U	380 U
Acenaphthylene	NA	NA	360 U	390 U	NA	370 U	380 U	420 U	340 U	350 U	390 U	370 U	390 U	380 U	380 U
Acetophenone	NA	NA	360 U	390 U	NA	370 U	380 U	420 U	340 U	350 U	390 U	370 U	390 U	380 U	380 U
Anthracene	NA	NA	360 U	390 U	NA	370 U	380 U	420 U	340 U	350 U	390 U	370 U	390 U	380 U	380 U
Atrazine	NA	NA	360 U	390 U	NA	370 U	380 U	420 U	340 U	350 U	390 U	370 U	390 U	380 U	380 U
Benzaldehyde	NA	NA	360 UJ	390 U	NA	370 U	380 U	420 U	340 U	350 U	390 U	370 U	390 U	380 U	380 U
Benzo(a)anthracene	NA	NA	360 U	390 U	NA	370 U	380 U	420 U	340 U	350 U	390 U	370 U	390 U	380 U	380 U
Benzo(a)pyrene	NA	NA	360 U	390 U	NA	370 U	380 U	420 U	340 U	350 U	390 U	370 U	390 U	380 U	380 U
Benzo(b)fluoranthene	NA	NA	360 U	390 U	NA	370 U	380 U	420 U	340 U	350 U	390 U	370 U	390 U	380 U	380 U
Benzo(g,h,i)perylene	NA	NA	360 U	390 U	NA	370 U	380 U	420 U	340 U	350 U	390 U	370 U	390 U	380 U	380 U
Benzo(k)fluoranthene	NA	NA	360 U	390 U	NA	370 U	380 U	420 U	340 U	350 U	390 U	370 U	390 U	380 U	380 U
Butylbenzylphthalate	NA	NA	360 U	390 U	NA	370 U	380 U	420 U	340 U	350 U	390 U	370 U	390 U	380 U	380 U
Caprolactam	NA	NA	360 U	390 U	NA	39 J	380 U	420 U	340 U	350 U	390 U	370 U	390 U	380 U	380 U
Carbazole	NA	NA	360 U	390 U	NA	370 U	380 U	420 U	340 U	350 U	390 U	370 U	390 U	380 U	380 U
Chrysene	NA	NA	360 U	390 U	NA	370 U	380 U	420 U	340 U	350 U	390 U	370 U	390 U	380 U	380 U
Di-n-butylphthalate	NA	NA	42 J	54 J	NA	44 J	43 J	58 J	52 J	60 J	50 J	61 J	390 U	380 U	380 U
Di-n-octylphthalate	NA	NA	360 U	390 UJ	NA	370 UJ	380 U	420 U	340 U	350 U	390 UJ	370 UJ	390 U	380 U	380 U
Dibenz(a,h)anthracene	NA	NA	360 U	390 U	NA	370 U	380 U	420 U	340 U	350 U	390 U	370 U	390 U	380 U	380 U
Dibenzofuran	NA	NA	360 U	390 U	NA	370 U	380 U	420 U	340 U	350 U	390 U	370 U	390 U	380 U	380 U
Diethylphthalate	NA	NA	360 U	390 U	NA	370 U	380 U	420 U	340 U	350 U	390 U	370 U	390 U	380 U	380 U
Dimethyl phthalate	NA	NA	360 U	390 U	NA	370 U	380 U	420 U	340 U	350 U	390 U	370 U	390 U	380 U	380 U
Fluoranthene	NA	NA	360 U	390 U	NA	370 U	380 U	420 U	340 U	350 U	390 U	370 U	390 U	380 U	380 U
Fluorene	NA	NA	360 U	390 U	NA	370 U	380 U	420 U	340 U	350 U	390 U	370 U	390 U	380 U	380 U
Hexachlorobenzene	NA	NA	360 U	390 U	NA	370 U	380 U	420 U	340 U	350 U	390 U	370 U	390 U	380 U	380 U
Hexachlorobutadiene	NA	NA	360 U	390 U	NA	370 U	380 U	420 U	340 U	350 U	390 U	370 U	390 U	380 U	380 U
Hexachlorocyclopentadiene	NA	NA	360 UJ	390 U	NA	370 U	380 U	420 U	340 U	350 U	390 U	370 U	390 R	380 U	380 R
Hexachloroethane	NA	NA	360 U	390 U	NA	370 U	380 U	420 U	340 U	350 U	390 U	370 U	390 U	380 U	380 U
Indeno(1,2,3-cd)pyrene	NA	NA	360 U	390 U	NA	370 U	380 U	420 U	340 U	350 U	390 U	370 U	390 U	380 U	380 U
Isophorone	NA	NA	360 U	390 U	NA	370 U	380 U	420 U	340 U	350 U	390 U	370 U	390 U	380 U	380 U
Naphthalene	NA	NA	360 U	390 U	NA	370 U	380 U	420 U	340 U	350 U	390 U	370 U	390 U	380 U	380 U
Nitrobenzene	NA	NA	360 U	390 U	NA	370 U	380 U	420 U	340 U	350 U	390 U	370 U	390 U	380 U	380 U
Pentachlorophenol	NA	NA	900 U	980 U	NA	930 U	940 U	1,100 U	860 U	880 U	980 U	930 U	970 U	970 U	960 U
Phenanthrene	NA	NA	360 U	390 U	NA	370 U	380 U	420 U	340 U	350 U	390 U	370 U	390 U	380 U	380 U
Phenol	NA	NA	360 U	390 U	NA	370 U	380 U	420 U	340 U	350 U	390 U	370 U	390 U	380 U	380 U
Pyrene	NA	NA	360 U	390 U	NA	370 U	380 U	420 U	340 U	350 U	390 U	370 U	390 U	380 U	380 U
bis(2-Chloroethoxy)methane	NA	NA	360 U	390 U	NA	370 U	380 U	420 U	340 U	350 U	390 U	370 U	390 U	380 U	380 U
bis(2-Chloroethyl)ether	NA	NA	360 U	390 U	NA	370 U	380 U	420 U	340 U	350 U	390 U	370 U	390 U	380 U	380 U
bis(2-Ethylhexyl)phthalate	NA	NA	140 J	140 J	NA	130 J	160 J	430	210 J	300 J	86 J	170 J	73 J	47 U	66 U
n-Nitroso-di-n-propylamine	NA	NA	360 UJ	390 U	NA	370 U	380 U	420 U	340 U	350 U	390 U	370 U	390 U	380 U	380 U
n-Nitrosodiphenylamine	NA	NA	360 U	390 U	NA	370 U	380 U	420 U	340 U	350 U	390 U	370 U	390 U	380 U	380 U

Station ID	IR95B-IS107	IR95B-IS109		IR95B-IS111	IR95B-IS113	IR95B-IS114	IR95B-IS115		IR95B-IS116		IR95B-IS117		IR95B-IS119	IR95B-IS121	IR95B-IS123
Sample ID	IR95B-IS107-3-4-06D-2	IR95B-IS109-3-4-06D-2	IR95B-IS109D-3-4-06D-2	IR95B-IS111-3-4-06D-2	IR95B-IS113-3-4-06D-2	IR95B-IS114-3-4-06D-1	IR95B-IS115-3-4-06D-1	IR95B-IS115-3-4-06D-2	IR95B-IS116-3-4-06D-1	IR95B-IS116D-3-4-06D-1	IR95B-IS117-3-4-06D-2	IR95B-IS117D-3-4-06D-2	IR95B-IS119-3-4-06D-2	IR95B-IS121-3-4-06D-2	IR95B-IS123-3-4-06D
Sample Date	10/05/06	10/05/06	10/05/06	10/05/06	10/05/06	10/03/06	10/03/06	10/05/06	10/03/06	10/03/06	10/05/06	10/05/06	10/05/06	10/05/06	10/05/06
Chemical Name															
Semi-volatile Organic Compounds (UG/KG)															
1,1-Biphenyl	380 U	400 U	400 U	380 U	380 U	NA	NA	380 U	NA	NA	380 U	380 U	380 U	390 U	390
2,2'-Oxybis(1-chloropropane)	380 U	400 U	400 U	380 U	380 U	NA	NA	380 U	NA	NA	380 U	380 U	380 U	390 U	390
2,4,5-Trichlorophenol	970 U	1,000 U	1,000 U	950 U	950 U	NA	NA	960 U	NA	NA	940 U	950 U	940 U	970 U	980
2,4,6-Trichlorophenol	380 U	400 U	400 U	380 U	380 U	NA	NA	380 U	NA	NA	380 U	380 U	380 U	390 U	390
2,4-Dichlorophenol	380 U	400 U	400 U	380 U	380 U	NA	NA	380 U	NA	NA	380 U	380 U	380 U	390 U	390
2,4-Dimethylphenol	380 U	400 U	400 U	380 U	380 U	NA	NA	380 U	NA	NA	380 U	380 U	380 U	390 U	390
2,4-Dinitrophenol	970 R	1,000 UJ	1,000 UJ	950 R	950 R	NA	NA	960 R	NA	NA	940 R	950 R	940 R	970 R	980
2,4-Dinitrotoluene	380 U	400 U	400 U	380 U	380 U	NA	NA	380 U	NA	NA	380 U	380 U	380 U	390 U	390
2,6-Dinitrotoluene	380 U	400 U	400 U	380 U	380 U	NA	NA	380 U	NA	NA	380 U	380 U	380 U	390 U	390
2-Chloronaphthalene	380 U	400 U	400 U	380 U	380 U	NA	NA	380 U	NA	NA	380 U	380 U	380 U	390 U	390
2-Chlorophenol	380 U	400 U	400 U	380 U	380 U	NA	NA	380 U	NA	NA	380 U	380 U	380 U	390 U	390
2-Methylnaphthalene	380 U	400 U	400 U	380 U	380 U	NA	NA	380 U	NA	NA	380 U	380 U	380 U	390 U	390
2-Methylphenol	380 U	400 U	400 U	380 U	380 U	NA	NA	380 U	NA	NA	380 U	380 U	380 U	390 U	390
2-Nitroaniline	970 U	1,000 U	1,000 U	950 U	950 U	NA	NA	960 U	NA	NA	940 U	950 U	940 U	970 U	980
2-Nitrophenol	380 U	400 U	400 U	380 U	380 U	NA	NA	380 U	NA	NA	380 U	380 U	380 U	390 U	390
3,3'-Dichlorobenzidine	380 U	400 U	400 U	380 U	380 U	NA	NA	380 U	NA	NA	380 U	380 U	380 U	390 U	390
3-Nitroaniline	970 U	1,000 U	1,000 U	950 U	950 U	NA	NA	960 U	NA	NA	940 U	950 U	940 U	970 U	980
4,6-Dinitro-2-methylphenol	970 UJ	1,000 U	1,000 U	950 U	950 U	NA	NA	960 U	NA	NA	940 U	950 UJ	940 UJ	970 UJ	980
4-Bromophenyl-phenylether	380 U	400 U	400 U	380 U	380 U	NA	NA	380 U	NA	NA	380 U	380 U	380 U	390 U	390
4-Chloro-3-methylphenol	380 U	400 U	400 U	380 U	380 U	NA	NA	380 U	NA	NA	380 U	380 U	380 U	390 U	390
4-Chloroaniline	380 U	400 U	400 U	380 U	380 U	NA	NA	380 U	NA	NA	380 U	380 U	380 U	390 U	390
4-Chlorophenyl-phenylether	380 U	400 U	400 U	380 U	380 U	NA	NA	380 U	NA	NA	380 U	380 U	380 U	390 U	390
4-Methylphenol	380 U	400 U	400 U	380 U	380 U	NA	NA	380 U	NA	NA	380 U	380 U	380 U	390 U	390
4-Nitroaniline	970 U	1,000 UJ	1,000 UJ	950 U	950 U	NA	NA	960 U	NA	NA	940 U	950 U	940 U	970 U	980
4-Nitrophenol	970 U	1,000 U	1,000 U	950 U	950 U	NA	NA	960 U	NA	NA	940 U	950 U	940 U	970 U	980
Acenaphthene	380 U	400 U	400 U	380 U	380 U	NA	NA	380 U	NA	NA	380 U	380 U	380 U	390 U	390
Acenaphthylene	380 U	400 U	400 U	380 U	380 U	NA	NA	380 U	NA	NA	380 U	380 U	380 U	390 U	390
Acetophenone	380 U	400 U	400 U	380 U	380 U	NA	NA	380 U	NA	NA	380 U	380 U	380 U	390 U	390
Anthracene	380 U	400 U	400 U	380 U	380 U	NA	NA	380 U	NA	NA	380 U	380 U	380 U	390 U	390
Atrazine	380 U	400 U	400 U	380 U	380 U	NA	NA	380 U	NA	NA	380 U	380 U	380 U	390 U	390
Benzaldehyde	380 U	400 UJ	400 UJ	380 UJ	380 UJ	NA	NA	380 UJ	NA	NA	380 UJ	380 U	380 U	390 U	39(
Benzo(a)anthracene	380 U	400 U	400 U	380 U	380 U	NA	NA	380 U	NA	NA	380 U	380 U	380 U	390 U	390
Benzo(a)pyrene	380 U	400 U	400 U	380 U	380 U	NA	NA	380 U	NA	NA	380 U	380 U	380 U	390 U	390
Benzo(b)fluoranthene	380 U	400 U	400 U	380 U	380 U	NA	NA	380 U	NA	NA	380 U	380 U	380 U	390 U	390
Benzo(g,h,i)perylene	380 U	400 U	400 U	380 U	380 U	NA	NA	380 U	NA	NA	380 U	380 U	380 U	390 U	390
Benzo(k)fluoranthene	380 U	400 U	400 U	380 U	380 U	NA	NA	380 U	NA	NA	380 U	380 U	380 U	390 U	390
Butylbenzylphthalate	380 U	400 U	400 U	380 U	380 U	NA	NA	380 U	NA	NA	380 U	380 U	380 U	390 U	390
Caprolactam	380 U	400 U	400 U	380 U	380 U	NA	NA	380 U	NA	NA	380 U	380 U	380 U	390 U	390
Carbazole	380 U	400 U	400 U	380 U	380 U	NA	NA	380 U	NA	NA	380 U	380 U	380 U	390 U	390
Chrysene	380 U	400 U	400 U	380 U	380 U	NA	NA	380 U	NA	NA	380 U	380 U	380 U	390 U	390
Di-n-butylphthalate	380 U	400 U	400 U	62 J	58 J	NA	NA	72 J	NA	NA	61 J	73 J	44 J	390 U	390
Di-n-octylphthalate	380 U	400 U	400 U	380 U	380 U	NA	NA	380 U	NA	NA	380 U	380 U	380 U	390 U	390
Dibenz(a,h)anthracene	380 U	400 U	400 U	380 U	380 U	NA	NA	380 U	NA	NA	380 U	380 U	380 U	390 U	390
Dibenzofuran	380 U	400 U	400 U	380 U	380 U	NA	NA	380 U	NA	NA	380 U	380 U	380 U	390 U	390
Diethylphthalate	380 U	400 U	400 U	380 U	380 U	NA	NA	380 U	NA	NA	380 U	380 U	380 U	390 U	390
Dimethyl phthalate	380 U	400 U	400 U	380 U	380 U	NA	NA	380 U	NA	NA	380 U	380 U	380 U	390 U	390
Fluoranthene	380 U	400 U	400 U	380 U	380 U	NA	NA	380 U	NA	NA	380 U	380 U	380 U	390 U	390
Fluorene	380 U	400 U	400 U	380 U	380 U	NA	NA	380 U	NA	NA	380 U	380 U	380 U	390 U	390
Hexachlorobenzene	380 U	400 U	400 U	380 U	380 U	NA	NA	380 U	NA	NA	380 U	380 U	380 U	390 U	390
Hexachlorobutadiene	380 U	400 U	400 U	380 U	380 U	NA	NA	380 U	NA	NA	380 U	380 U	380 U	390 U	390
Hexachlorocyclopentadiene	380 U	400 UJ	400 UJ	380 U	380 U	NA	NA	380 U	NA	NA	380 U	380 U	380 U	390 U	390
Hexachloroethane	380 U	400 U	400 U	380 U	380 U	NA	NA	380 U	NA	NA	380 U	380 U	380 U	390 U	390
Indeno(1,2,3-cd)pyrene	380 U	400 U	400 U	380 U	380 U	NA	NA	380 U	NA	NA	380 U	380 U	380 U	390 U	390
Isophorone	380 U	400 U	400 U	380 U	380 U	NA	NA	380 U	NA	NA	380 U	380 U	380 U	390 U	390
Naphthalene	380 U	400 U	400 U	380 U	380 U	NA	NA	380 U	NA	NA	380 U	380 U	380 U	390 U	390
Nitrobenzene	380 U	400 U	400 U	380 U	380 U	NA	NA	380 U	NA	NA	380 U	380 U	380 U	390 U	390
Pentachlorophenol	970 U	1,000 U	1,000 U	950 U	950 U	NA	NA	960 U	NA	NA	940 U	950 U	940 U	970 U	980
Phenanthrene	380 U	400 U	400 U	380 U	380 U	NA	NA	380 U	NA	NA	380 U	380 U	380 U	390 U	390
Phenol	380 U	400 U	400 U	380 U	380 U	NA	NA	380 U	NA	NA	380 U	380 U	380 U	390 U	390
Pyrene	380 U	400 U	400 U	380 U	380 U	NA	NA	380 U	NA	NA	380 U	380 U	380 U	390 U	390
bis(2-Chloroethoxy)methane	380 U	400 U	400 U	380 U	380 U	NA	NA	380 U	NA	NA	380 U	380 U	380 U	390 U	390
bis(2-Chloroethyl)ether	380 U	400 U	400 U	380 U	380 U	NA	NA	380 U	NA	NA	380 U	380 U	380 U	390 U	390
bis(2-Ethylhexyl)phthalate	61 U	230 U	170 U	110 U	100 U	NA	NA	400 U	NA	NA	300 U	170 U	130 U	120 U	110
n-Nitroso-di-n-propylamine	380 U	400 UJ	400 UJ	380 U	380 U	NA	NA	380 U	NA	NA	380 U	380 U	380 U	390 U	390
n-Nitrosodiphenylamine	380 U	400 U	400 U	380 U	380 U	NA	NA	380 U	NA	NA	380 U	380 U	380 U	390 U	390

Station ID		IR95B-IS125	IR95B-IS127		IR95B-IS129	IR95C-IS100	IR95C-IS101		IR95C-IS102	IR95C-IS103	IR95C-IS105	IR95C-IS107	IR95C-IS109	IR95C-IS111	IR95C-IS113	
Sample ID	2	IR95B-IS125-3-4-06D-2	IR95B-IS127-3-4-06D-2	IR95B-IS127D-3-4-06D-2	IR95B-IS129-3-4-06D-2	IR95C-IS100-3-4-06D-1	IR95C-IS101-3-4-06D-1	IR95C-IS101-3-4-06D-2	IR95C-IS102-3-4-06D-1	IR95C-IS103-3-4-06D-2	IR95C-IS105-3-4-06D-2	IR95C-IS107-3-4-06D-2	IR95C-IS109-3-4-06D-2	IR95C-IS111-3-4-06D-2	IR95C-IS113-3-4-06D-2	IR95C-IS113D-3-4-06D
Sample Date		10/05/06	10/05/06	10/05/06	10/05/06	10/03/06	10/03/06	10/03/06	10/03/06	10/03/06	10/03/06	10/03/06	10/03/06	10/03/06	10/03/06	10/03/06
Chemical Name																
Semi-volatile Organic Compounds (UG/KG)																
1,1-Biphenyl	U	380 U	380 U	390 U	380 U	NA	NA	380 U	NA	360 U	370 U	360 U	370 U	380 U	360 U	360
2,2'-Oxybis(1-chloropropane)	U	380 U	380 U	390 U	380 U	NA	NA	380 U	NA	360 U	370 U	360 U	370 U	380 U	360 U	360
2,4,5-Trichlorophenol	U	940 U	960 U	970 U	940 U	NA	NA	940 U	NA	910 U	930 U	900 U	930 U	940 U	900 U	900
2,4,6-Trichlorophenol	U	380 U	380 U	390 U	380 U	NA	NA	380 U	NA	360 U	370 U	360 U	370 U	380 U	360 U	360
2,4-Dichlorophenol	U	380 U	380 U	390 U	380 U	NA	NA	380 U	NA	360 U	370 U	360 U	370 U	380 U	360 U	360
2,4-Dimethylphenol	U	380 U	380 U	390 U	380 U	NA	NA	380 U	NA	360 U	370 U	360 U	370 U	380 UJ	360 U	360
2,4-Dinitrophenol	R	940 UJ	960 R	970 R	940 R	NA	NA	940 UJ	NA	910 UJ	930 UJ	900 UJ	930 UJ	940 R	900 UJ	900
2,4-Dinitrotoluene	U	380 U	380 U	390 U	380 U	NA	NA	380 U	NA	360 U	370 U	360 U	370 U	380 U	360 U	360
2,6-Dinitrotoluene	U	380 U	380 U	390 U	380 U	NA	NA	380 U	NA	360 U	370 U	360 U	370 U	380 U	360 U	360
2-Chloronaphthalene	U	380 U	380 U	390 U	380 U	NA	NA	380 U	NA	360 U	370 U	360 U	370 U	380 U	360 U	360
2-Chlorophenol	U	380 U	380 U	390 U	380 U	NA	NA	380 U	NA	360 U	370 U	360 U	370 U	380 U	360 U	360
2-Methylnaphthalene	U	380 U	380 U	390 U	380 U	NA	NA	380 U	NA	360 U	370 U	360 U	370 U	380 U	360 U	360
2-Methylphenol	U	380 U	380 U	390 U	380 U	NA	NA	380 U	NA	360 U	370 U	360 U	370 U	380 U	360 U	360
2-Nitroaniline	U	940 U	960 U	970 U	940 U	NA	NA	940 U	NA	910 U	930 U	900 U	930 U	940 U	900 U	900
2-Nitrophenol	U	380 U	380 U	390 U	380 U	NA	NA	380 U	NA	360 U	370 U	360 U	370 U	380 U	360 U	360
3,3'-Dichlorobenzidine	U	380 UJ	380 U	390 UJ	380 U	NA	NA	380 UJ	NA	360 UJ	370 UJ	360 UJ	370 UJ	380 U	360 UJ	360
3-Nitroaniline	U	940 U	960 U	970 U	940 U	NA	NA	940 U	NA	910 U	930 U	900 U	930 U	940 U	900 U	900
4,6-Dinitro-2-methylphenol	UJ	940 U	960 UJ	970 UJ	940 UJ	NA	NA	940 U	NA	910 U	930 U	900 U	930 U	940 UJ	900 U	900
4-Bromophenyl-phenylether	U	380 U	380 U	390 U	380 U	NA	NA	380 U	NA	360 U	370 U	360 U	370 U	380 U	360 U	360
4-Chloro-3-methylphenol	U	380 U	380 U	390 U	380 U	NA	NA	380 U	NA	360 U	370 U	360 U	370 U	380 U	360 U	360
4-Chloroaniline	U	380 U	380 U	390 U	380 U	NA	NA	380 UJ	NA	360 UJ	370 UJ	360 UJ	370 UJ	380 UJ	360 UJ	360
4-Chlorophenyl-phenylether	U	380 U	380 U	390 U	380 U	NA	NA	380 U	NA	360 U	370 U	360 U	370 U	380 U	360 U	360
4-Methylphenol	U	380 U	380 U	390 U	380 U	NA	NA	380 U	NA	360 U	370 U	360 U	370 U	380 U	360 U	360
4-Nitroaniline	U	940 U	960 U	970 UJ	940 U	NA	NA	940 UJ	NA	910 UJ	930 UJ	900 UJ	930 UJ	940 U	900 UJ	900
4-Nitrophenol	U	940 UJ	960 U	970 UJ	940 U	NA	NA	940 UJ	NA	910 UJ	930 UJ	900 UJ	930 UJ	940 U	900 UJ	900
Acenaphthene	U	380 U	380 U	390 U	380 U	NA	NA	380 U	NA	360 U	370 U	360 U	370 U	380 U	360 U	360
Acenaphthylene	U	380 U	380 U	390 U	380 U	NA	NA	380 U	NA	360 U	370 U	360 U	370 U	380 U	360 U	360
Acetophenone	U	380 U	380 U	390 U	380 U	NA	NA	380 U	NA	360 U	370 U	360 U	370 U	380 U	360 U	360
Anthracene	U	380 U	380 U	390 U	380 U	NA	NA	380 U	NA	360 U	370 U	360 U	370 U	380 U	360 U	360
Atrazine	U	380 UJ	380 U	390 U	380 U	NA	NA	380 UJ	NA	360 UJ	370 UJ	360 UJ	370 UJ	380 U	360 UJ	360
Benzaldehyde	U	380 U	380 U	390 U	380 U	NA	NA	380 U	NA	360 U	370 U	360 U	370 U	380 U	360 U	360
Benzo(a)anthracene	U	380 U	380 U	390 U	380 U	NA	NA	380 U	NA	360 U	370 U	360 U	370 U	380 U	360 U	360
Benzo(a)pyrene	U	380 U	380 U	390 U	380 U	NA	NA	380 U	NA	360 U	370 U	360 U	370 U	380 U	360 U	360
Benzo(b)fluoranthene	U	380 U	380 U	390 U	380 U	NA	NA	380 U	NA	360 U	370 U	360 U	370 U	380 U	360 U	360
Benzo(g,h,i)perylene	U	380 U	380 U	390 U	380 U	NA	NA	380 U	NA	360 U	370 U	360 U	370 U	380 U	360 U	360
Benzo(k)fluoranthene	U	380 U	380 U	390 U	380 U	NA	NA	380 U	NA	360 U	370 U	360 U	370 U	380 U	360 U	360
Butylbenzylphthalate	U	380 U	380 U	390 U	380 U	NA	NA	380 U	NA	360 U	370 U	360 U	370 U	380 U	360 U	360
Caprolactam	U	380 U	380 U	390 U	380 U	NA	NA	380 U	NA	360 U	370 U	360 U	370 U	380 UJ	360 U	360
Carbazole	U	380 U	380 U	390 U	380 U	NA	NA	380 U	NA	360 U	370 U	360 U	370 U	380 U	360 U	360
Chrysene	U	380 U	380 U	390 U	380 U	NA	NA	380 U	NA	360 U	370 U	360 U	370 U	380 U	360 U	360
Di-n-butylphthalate	U	62 J	380 U	54 J	43 J	NA	NA	380 U	NA	360 U	370 U	360 U	370 U	380 U	360 U	360
Di-n-octylphthalate	U	380 U	380 U	390 U	380 U	NA	NA	380 U	NA	360 U	370 U	360 U	370 U	380 UJ	360 U	360
Dibenz(a,h)anthracene	U	380 U	380 U	390 U	380 U	NA	NA	380 U	NA	360 U	370 U	360 U	370 U	380 U	360 U	360
Dibenzofuran	U	380 U	380 U	390 U	380 U	NA	NA	380 U	NA	360 U	370 U	360 U	370 U	380 U	360 U	360
Diethylphthalate	U	380 U	380 U	390 U	380 U	NA	NA	380 U	NA	360 U	370 U	360 U	370 U	380 U	360 U	360
Dimethyl phthalate	U	380 U	380 U	390 U	380 U	NA	NA	380 U	NA	360 U	370 U	360 U	370 U	380 U	360 U	360
Fluoranthene	U	380 U	380 U	390 U	380 U	NA	NA	380 U	NA	360 U	370 U	360 U	370 U	380 U	360 U	360
Fluorene	U	380 U	380 U	390 U	380 U	NA	NA	380 U	NA	360 U	370 U	360 U	370 U	380 U	360 U	360
Hexachlorobenzene	U	380 U	380 U	390 U	380 U	NA	NA	380 U	NA	360 U	370 U	360 U	370 U	380 U	360 U	360
Hexachlorobutadiene	U	380 U	380 U	390 U	380 U	NA	NA	380 U	NA	360 U	370 U	360 U	370 U	380 U	360 U	360
Hexachlorocyclopentadiene	U	380 UJ	380 U	390 R	380 U	NA	NA	380 UJ	NA	360 UJ	370 UJ	360 UJ	370 UJ	380 UJ	360 UJ	360
Hexachloroethane	U	380 U	380 U	390 U	380 U	NA	NA	380 U	NA	360 U	370 U	360 U	370 U	380 U	360 U	360
Indeno(1,2,3-cd)pyrene	U	380 U	380 U	390 U	380 U	NA	NA	380 U	NA	360 U	370 U	360 U	370 U	380 U	360 U	360
Isophorone	U	380 U	380 U	390 U	380 U	NA	NA	380 U	NA	360 U	370 U	360 U	370 U	380 U	360 U	360
Naphthalene	U	380 U	380 U	390 U	380 U	NA	NA	380 U	NA	360 U	370 U	360 U	370 U	380 U	360 U	360
Nitrobenzene	U	380 U	380 U	390 U	380 U	NA	NA	380 U	NA	360 U	370 U	360 U	370 U	380 U	360 U	360
Pentachlorophenol	U	940 U	960 U	970 U	940 U	NA	NA	940 U	NA	910 U	930 U	900 U	930 U	940 UJ	900 U	900
Phenanthrene	U	380 U	380 U	390 U	380 U	NA	NA	380 U	NA	360 U	370 U	360 U	370 U	380 U	360 U	360
Phenol	U	380 U	380 U	390 U	380 U	NA	NA	380 U	NA	360 U	370 U	360 U	370 U	380 U	360 U	360
Pyrene	U	380 U	380 U	390 U	380 U	NA	NA	380 U	NA	360 U	370 U	360 U	370 U	380 U	360 U	360
bis(2-Chloroethoxy)methane	U	380 U	380 U	390 U	380 U	NA	NA	380 U	NA	360 U	370 U	360 U	370 U	380 U	360 U	360
bis(2-Chloroethyl)ether	U	380 U	380 U	390 U	380 U	NA	NA	380 U	NA	360 U	370 U	360 U	370 U	380 U	360 U	360
bis(2-Ethylhexyl)phthalate	U	200 U	120 U	420	110 U	NA	NA	50 J	NA	44 J	57 J	39 J	44 J	99 J	43 J	39
n-Nitroso-di-n-propylamine	U	380 U	380 U	390 U	380 U	NA	NA	380 U	NA	360 U	370 U	360 U	370 U	380 U	360 U	360
n-Nitrosodiphenylamine	U	380 U	380 U	390 U	380 U	NA	NA	380 U	NA	360 U	370 U	360 U	370 U	380 U	360 U	360

Station ID		IR95C-IS115	IR95C-IS117	IR95C-IS119	IR95C-IS121	IR95C-IS123		IR95C-IS125	IR95C-IS127
Sample ID	2	IR95C-IS115-3-4-06D-2	IR95C-IS117-3-4-06D-2	IR95C-IS119-3-4-06D-2	IR95C-IS121-3-4-06D-2	IR95C-IS123-3-4-06D-2	IR95C-IS123D-3-4-06D-2	IR95C-IS125-3-4-06D-2	IR95C-IS127-3-4-06D-2
Sample Date		10/03/06	10/03/06	10/03/06	10/03/06	10/03/06	10/03/06	10/03/06	10/03/06
Chemical Name									
Semi-volatile Organic Compounds (UG/KG)									
1,1-Biphenyl	U	380 U	380 U	360 U	360 U	370 U	380 U	360 U	380 U
2,2'-Oxybis(1-chloropropane)	U	380 U	380 U	360 U	360 U	370 U	380 U	360 U	380 U
2,4,5-Trichlorophenol	U	970 U	960 U	890 U	910 U	940 U	950 U	920 U	970 U
2,4,6-Trichlorophenol	U	380 U	380 U	360 U	360 U	370 U	380 U	360 U	380 U
2,4-Dichlorophenol	U	380 U	380 U	360 U	360 U	370 U	380 U	360 U	380 U
2,4-Dimethylphenol	U	380 U	380 U	360 U	360 UJ	370 UJ	380 UJ	360 UJ	380 UJ
2,4-Dinitrophenol	UJ	970 UJ	960 UJ	890 UJ	910 R	940 R	950 R	920 R	970 R
2,4-Dinitrotoluene	U	380 U	380 U	360 U	360 U	370 U	380 U	360 U	380 U
2,6-Dinitrotoluene	U	380 U	380 U	360 U	360 U	370 U	380 U	360 U	380 U
2-Chloronaphthalene	U	380 U	380 U	360 U	360 U	370 U	380 U	360 U	380 U
2-Chlorophenol	U	380 U	380 U	360 U	360 U	370 U	380 U	360 U	380 U
2-Methylnaphthalene	U	380 U	380 U	360 U	360 UJ	370 U	380 U	360 U	380 U
2-Methylphenol	U	380 U	380 U	360 U	360 U	370 U	380 U	360 U	380 U
2-Nitroaniline	U	970 U	960 U	890 U	910 U	940 U	950 U	920 U	970 U
2-Nitrophenol	U	380 U	380 U	360 U	360 U	370 U	380 U	360 U	380 U
3,3'-Dichlorobenzidine	UJ	380 U	380 U	360 U	360 UJ	370 UJ	380 UJ	360 UJ	380 U
3-Nitroaniline	U	970 U	960 U	890 U	910 U	940 U	950 U	920 U	970 U
4,6-Dinitro-2-methylphenol	U	970 UJ	960 UJ	890 UJ	910 UJ	940 UJ	950 UJ	920 UJ	970 UJ
4-Bromophenyl-phenylether	U	380 U	380 U	360 U	360 U	370 U	380 U	360 U	380 U
4-Chloro-3-methylphenol	U	380 U	380 U	360 U	360 U	370 U	380 U	360 U	380 U
4-Chloroaniline	UJ	380 UJ	380 UJ	360 UJ	360 UJ	370 UJ	380 UJ	360 UJ	380 UJ
4-Chlorophenyl-phenylether	U	380 U	380 U	360 U	360 U	370 U	380 U	360 U	380 U
4-Methylphenol	U	380 U	380 U	360 U	360 U	370 U	380 U	360 U	380 U
4-Nitroaniline	UJ	970 U	960 U	890 U	910 U	940 U	950 U	920 U	970 U
4-Nitrophenol	UJ	970 U	960 U	890 U	910 U	940 U	950 U	920 U	970 U
Acenaphthene	U	380 U	380 U	360 U	360 U	370 U	380 U	360 U	380 U
Acenaphthylene	U	380 U	380 U	360 U	360 U	370 U	380 U	360 U	380 U
Acetophenone	U	380 U	380 U	360 U	360 U	370 U	380 U	360 U	380 U
Anthracene	U	380 U	380 U	360 U	360 U	370 U	380 U	360 U	380 U
Atrazine	UJ	380 U	380 U	360 U	360 U	370 U	380 U	360 U	380 U
Benzaldehyde	U	380 UJ	380 UJ	360 UJ	360 U	370 U	380 U	360 U	380 U
Benzo(a)anthracene	U	380 U	380 U	360 U	360 U	370 U	380 U	360 U	380 U
Benzo(a)pyrene	U	380 U	380 U	360 U	360 U	370 U	380 U	360 U	380 U
Benzo(b)fluoranthene	U	380 U	380 U	360 U	360 U	370 U	380 U	360 U	380 U
Benzo(g,h,i)perylene	U	380 U	380 U	360 U	360 U	370 U	380 U	360 U	380 U
Benzo(k)fluoranthene	U	380 U	380 U	360 U	360 U	370 U	380 U	360 U	380 U
Butylbenzylphthalate	U	380 U	380 U	360 U	360 U	370 U	380 U	360 U	380 U
Caprolactam	U	380 UJ	380 UJ	360 UJ	360 UJ	370 UJ	380 UJ	360 UJ	380 UJ
Carbazole	U	380 U	380 U	360 U	360 U	370 U	380 U	360 U	380 U
Chrysene	U	380 U	380 U	360 U	360 U	370 U	380 U	360 U	380 U
Di-n-butylphthalate	U	56 J	380 U	360 U	360 U	370 U	380 U	360 U	380 U
Di-n-octylphthalate	U	380 UJ	380 UJ	360 UJ	360 U	370 U	380 U	360 U	380 UJ
Dibenz(a,h)anthracene	U	380 U	380 U	360 U	360 U	370 U	380 U	360 U	380 U
Dibenzofuran	U	380 U	380 U	360 U	360 U	370 U	380 U	360 U	380 U
Diethylphthalate	U	380 U	380 U	360 U	360 U	370 U	380 U	360 U	380 U
Dimethyl phthalate	U	380 U	380 U	360 U	360 U	370 U	380 U	360 U	380 U
Fluoranthene	U	380 U	380 U	360 U	360 U	370 U	380 U	360 U	380 U
Fluorene	U	380 U	380 U	360 U	360 U	370 U	380 U	360 U	380 U
Hexachlorobenzene	U	380 U	380 U	360 U	360 U	370 U	380 U	360 U	380 U
Hexachlorobutadiene	U	380 U	380 U	360 U	360 U	370 U	380 U	360 U	380 U
Hexachlorocyclopentadiene	UJ	380 UJ	380 UJ	360 UJ	360 U	370 UJ	380 UJ	360 UJ	380 UJ
Hexachloroethane	U	380 U	380 U	360 U	360 U	370 U	380 U	360 U	380 U
Indeno(1,2,3-cd)pyrene	U	380 U	380 U	360 U	360 U	370 U	380 U	360 U	380 U
Isophorone	U	380 U	380 U	360 U	360 U	370 U	380 U	360 U	380 U
Naphthalene	U	380 U	380 U	360 U	360 U	370 U	380 U	360 U	380 U
Nitrobenzene	U	380 U	380 U	360 U	360 U	370 U	380 U	360 U	380 U
Pentachlorophenol	U	970 UJ	960 UJ	890 UJ	910 UJ	940 UJ	950 UJ	920 UJ	970 UJ
Phenanthrene	U	380 U	380 U	360 U	360 U	370 U	380 U	360 U	380 U
Phenol	U	380 U	380 U	360 U	360 U	370 U	380 U	360 U	380 U
Pyrene	U	380 U	380 U	360 U	360 U	370 U	380 U	360 U	380 U
bis(2-Chloroethoxy)methane	U	380 U	380 U	360 U	360 U	370 U	380 U	360 U	380 U
bis(2-Chloroethyl)ether	U	380 U	380 U	360 U	360 U	370 U	380 U	360 U	380 U
bis(2-Ethylhexyl)phthalate	J	120 U	83 J	91 J	100 J	96 J	100 J	96 J	91 J
n-Nitroso-di-n-propylamine	U	380 U	380 U	360 U	360 U	370 U	380 U	360 U	380 U
n-Nitrosodiphenylamine	U	380 U	380 U	360 U	360 U	370 U	380 U	360 U	380 U

Station ID	IR95A-IS100	IR95A-IS101			IR95A-IS102	IR95A-IS103	IR95A-IS115	IR95A-IS117	IR95A-IS119		IR95A-IS121	IR95A-IS123	IR95B-IS101	IR95B-IS103	IR95B-IS105
Sample ID	IR95A-IS100-3-4-06D-1	IR95A-IS101-3-4-06D-1	IR95A-IS101-3-4-06D-2	IR95A-IS101D-3-4-06D-2	IR95A-IS102-3-4-06D-1	IR95A-IS103-3-4-06D-2	IR95A-IS115-3-4-06D-2	IR95A-IS117-3-4-06D-2	IR95A-IS119-3-4-06D-2	IR95A-IS119D-3-4-06D-2	IR95A-IS121-3-4-06D-2	IR95A-IS123-3-4-06D-2	IR95B-IS101-3-4-06D-2	IR95B-IS103-3-4-06D-2	IR95B-IS105-3-4-06D-2
Sample Date	10/03/06	10/03/06	10/04/06	10/04/06	10/03/06	10/04/06	10/04/06	10/04/06	10/04/06	10/04/06	10/04/06	10/04/06	10/05/06	10/05/06	10/05/06
Chemical Name															
Pesticide/Polychlorinated Biphenyls (UG/KG)															
4,4'-DDD	NA	NA	3.6 U	3.9 U	NA	3.7 U	3.7 U	4.2 U	3.4 U	3.5 U	3.9 U	3.7 U	3.9 U	3.9 U	3.8 U
4,4'-DDE	NA	NA	3.6 U	2.5 J	NA	2.6 J	3.7 U	4.2 U	3.4 U	3.5 U	3.9 U	3.7 U	3.9 U	3.9 U	3.8 U
4,4'-DDT	NA	NA	3.6 U	3.9 U	NA	3.7 U	3.7 U	4.2 U	3.4 U	3.5 U	3.9 U	3.7 U	3.9 U	3.9 U	3.8 U
Aldrin	NA	NA	1.9 U	2 U	NA	1.9 U	1.9 U	2.2 U	1.8 U	1.8 U	2 U	1.9 U	2 U	2 U	2 U
Aroclor-1016	NA	NA	36 U	39 U	NA	37 U	37 U	42 U	34 U	35 U	39 U	37 U	39 U	39 U	38 U
Aroclor-1221	NA	NA	73 U	79 U	NA	75 U	76 U	86 U	70 U	71 U	80 U	75 U	79 U	79 U	77 U
Aroclor-1232	NA	NA	36 U	39 U	NA	37 U	37 U	42 U	34 U	35 U	39 U	37 U	39 U	39 U	38 U
Aroclor-1242	NA	NA	36 U	39 U	NA	37 U	37 U	42 U	34 U	35 U	39 U	37 U	39 U	39 U	38 U
Aroclor-1248	NA	NA	36 U	39 U	NA	37 U	37 U	42 U	34 U	35 U	39 U	37 U	39 U	39 U	38 U
Aroclor-1254	NA	NA	36 U	39 U	NA	37 U	37 U	42 U	34 U	35 U	39 U	37 U	39 U	39 U	38 U
Aroclor-1260	NA	NA	36 U	39 U	NA	37 U	37 U	42 U	34 U	35 U	39 U	37 U	39 U	39 U	38 U
Dieldrin	NA	NA	3.6 U	3.9 U	NA	3.7 U	3.7 U	4.2 U	3.4 U	3.5 U	3.9 U	3.7 U	3.9 U	3.9 U	3.8 U
Endosulfan I	NA	NA	1.9 U	2 U	NA	1.9 U	1.9 U	2.2 U	1.8 U	1.8 U	2 U	1.9 U	2 U	2 U	2 U
Endosulfan II	NA	NA	3.6 U	3.9 U	NA	3.7 U	3.7 U	4.2 U	3.4 U	3.5 U	3.9 U	3.7 U	3.9 U	3.9 U	3.8 U
Endosulfan sulfate	NA	NA	3.6 U	3.9 U	NA	3.7 U	3.7 U	4.2 U	3.4 U	3.5 U	3.9 U	3.7 U	3.9 U	3.9 U	3.8 U
Endrin	NA	NA	3.6 U	3.9 U	NA	3.7 U	3.7 U	4.2 U	3.4 U	3.5 U	3.9 U	3.7 U	3.9 U	3.9 U	3.8 U
Endrin aldehyde	NA	NA	3.6 U	3.9 U	NA	3.7 U	3.7 U	4.2 U	3.4 U	3.5 U	3.9 U	3.7 U	3.9 U	3.9 U	3.8 U
Endrin ketone	NA	NA	3.6 U	3.9 U	NA	3.7 U	3.7 U	4.2 U	3.4 U	3.5 U	3.9 U	3.7 U	3.9 U	3.9 U	3.8 U
Heptachlor	NA	NA	1.9 U	2 U	NA	1.9 U	1.9 U	2.2 U	1.8 U	1.8 U	2 U	1.9 U	2 U	2 U	2 U
Heptachlor epoxide	NA	NA	1.9 U	2 U	NA	1.9 U	1.9 U	2.2 U	1.8 U	1.8 U	2 U	1.9 U	2 U	2 U	2 U
Methoxychlor	NA	NA	19 U	20 U	NA	19 U	19 U	22 U	18 U	18 U	20 U	19 U	20 U	20 U	20 U
Toxaphene	NA	NA	190 U	200 U	NA	190 U	190 U	220 U	180 U	180 U	200 U	190 U	200 U	200 U	200 U
alpha-BHC	NA	NA	1.9 U	2 U	NA	1.9 U	1.9 U	2.2 U	1.8 U	1.8 U	2 U	1.9 U	2 U	2 U	2 U
alpha-Chlordane	NA	NA	1.9 U	2 U	NA	1.9 U	1.9 U	2.2 U	1.8 U	1.8 U	2 U	1.9 U	2 U	2 U	2 U
beta-BHC	NA	NA	1.9 U	2 U	NA	1.9 U	1.9 U	2.2 U	1.8 U	1.8 U	2 U	1.9 U	2 U	2 U	2 U
delta-BHC	NA	NA	1.9 U	2 U	NA	1.9 U	1.9 U	2.2 U	1.8 U	1.8 U	2 U	1.9 U	2 U	2 U	2 U
gamma-BHC (Lindane)	NA	NA	1.9 U	2 U	NA	1.9 U	1.9 U	2.2 U	1.8 U	1.8 U	2 U	1.9 U	2 U	2 U	2 U
gamma-Chlordane	NA	NA	1.9 U	2 U	NA	1.9 U	1.9 U	2.2 U	1.8 U	1.8 U	2 U	1.9 U	2 U	2 U	2 U
Total Metals (MG/KG)															
Aluminum	NA	NA	1,610	1,240	NA	4,790	1,390	1,930	481	732	7,870	4,730	12,900 J	13,200	10,200
Antimony	NA	NA	4.7 UJ	0.085 UJ	NA	0.27 UJ	0.099 UJ	5.4 UJ	0.053 UJ	0.059 UJ	0.14 UJ	0.29 UJ	0.39 UJ	0.56 UJ	0.61 UJ
Arsenic	NA	NA	0.14 J-	0.14 J-	NA	0.51 J-	0.19 J	0.83 J	0.14 J	0.24 J	1.3 J-	0.19 J-	3.6 J-	4.7	2
Barium	NA	NA	5.9 J	4.8 J	NA	9.9 J	5.5 J	4.5 J	1.9 J	2.2 J	13.2 J	7 J	13.1 J	16.3	11.9 J
Beryllium	NA	NA	0.027 J	0.03 J	NA	0.076 J	0.03 J	0.039 J	0.019 J	0.021 J	0.094 J	0.067 J	0.13 J	0.16 J	0.13 J
Cadmium	NA	NA	0.38 U	0.42 U	NA	0.38 U	0.4 U	0.45 U	0.35 U	0.36 U	0.43 U	0.38 U	0.41 UJ	0.42 U	0.42 U
Calcium	NA	NA	186 J	126 J	NA	187 J	105 J	51.6 J	44.9 J	66.6 J	308 J	199 J	410 UJ	284 J	742
Chromium	NA	NA	1.8	2.3	NA	7	2.1	3.6	1.6	1.8	9.6	5.3	18.5 J	20.9	15.1
Cobalt	NA	NA	0.13 U	0.16 U	NA	0.3 J	0.19 J	0.2 J	0.075 J	0.082 J	0.58 J	0.28 J	0.45 J	0.58 J	0.45 J
Copper	NA	NA	3.2 U	3.2 U	NA	3.1 U	2.9 U	3.1 U	2.3 U	2.5 U	5.3 U	3.5 U	4.1 U	4.4 U	3.9 U
Iron	NA	NA	996	561	NA	1,910	575	1,480	286	331	3,370	1,030	6,570 J	6,690	3,890
Lead	NA	NA	2.2	2.3	NA	7	2.4	2.9	1.7	2.3	3.6	2.3	7.8 J	7.9 J	6.4 J
Magnesium	NA	NA	51.2 J	54.9 J	NA	150 J	61.8 J	79.4 J	22.7 J	28.3 J	264 J	141 J	584 J	565	562
Manganese	NA	NA	15.8 J	4.4 J	NA	14.5 J	4.4	3.8	1.8	1.8	6.8 J	3.4 J	8.6 J	7.7 J	6.9 J
Mercury	NA	NA	0.1 U	0.099 U	NA	0.094 U	0.094 U	0.11 U	0.086 U	0.097 U	0.099 U	0.09 U	0.098 U	0.11 U	0.093 U
Nickel	NA	NA	0.61 J	0.55 J	NA	1.8 J	0.46 J	0.53 J	0.2 U	0.22 U	2.3 J	0.83 J	1.9 J	1.9 J	1.5 J
Potassium	NA	NA	59.1 U	66.8 U	NA	144 J	61.6 U	101 J	44.9 U	49.1 U	342 J	254 J	747 J	621 J	563 J
Selenium	NA	NA	0.41 U	0.51 U	NA	0.55 U	0.3 U	0.54 U	0.25 U	0.33 U	1.3 U	0.6 U	0.27 U	0.66 U	0.71 U
Silver	NA	NA	0.78 U	0.82 U	NA	0.034 J	0.8 U	0.88 U	0.71 U	0.72 U	0.022 J	0.76 U	0.82 U	0.84 U	0.03 J
Sodium	NA	NA	31.3 U	35.5 J	NA	26.4 U	14 U	17.6 U	9.1 U	9.8 U	24.8 U	22.7 U	163 J	40.6 U	35.9 U
Thallium	NA	NA	0.2 U	0.13 U	NA	0.32 U	0.16 U	0.22 U	0.1 U	0.12 U	0.61 U	0.33 U	0.21 U	0.61 U	0.92 U
Vanadium	NA	NA	2.8 J	2.4 J	NA	6.8	2.2 J	7	2.1 J	2.1 J	11.8	5.6	25.6 J	29.7	19.9
Zinc	NA	NA	2.4 U	3.2 U	NA	12.3	3.1 U	2.3 U	1.8 U	2.3 U	4.8 U	3.9 U	6.9 U	7.5 U	5.6 U

Notes:
U- Analyte not detected
J- Reported value is estimated
J- - Reported value is biased low
UJ- Analyte not detected. Quantiation limit is imprecise
NA- Not analyzed
Shading represents detection

Station ID	IR95B-IS107	IR95B-IS109		IR95B-IS111	IR95B-IS113	IR95B-IS114	IR95B-IS115		IR95B-IS116		IR95B-IS117		IR95B-IS119	IR95B-IS121	IR95B-IS123
Sample ID	IR95B-IS107-3-4-06D-2	IR95B-IS109-3-4-06D-2	IR95B-IS109D-3-4-06D-2	IR95B-IS111-3-4-06D-2	IR95B-IS113-3-4-06D-2	IR95B-IS114-3-4-06D-1	IR95B-IS115-3-4-06D-1	IR95B-IS115-3-4-06D-2	IR95B-IS116-3-4-06D-1	IR95B-IS116D-3-4-06D-1	IR95B-IS117-3-4-06D-2	IR95B-IS117D-3-4-06D-2	IR95B-IS119-3-4-06D-2	IR95B-IS121-3-4-06D-2	IR95B-IS123-3-4-06D
Sample Date	10/05/06	10/05/06	10/05/06	10/05/06	10/05/06	10/03/06	10/03/06	10/05/06	10/03/06	10/03/06	10/05/06	10/05/06	10/05/06	10/05/06	10/05/06
Chemical Name															
Pesticide/Polychlorinated Biphenyls (UG/KG)															
4,4'-DDD	3.8 U	4 U	4 U	3.8 U	3.8 U	NA	NA	3.8 U	NA	NA	3.8 U	3.8 U	3.8 U	3.9 U	3.9
4,4'-DDE	3.8 U	4 U	4 U	3.8 U	3.8 U	NA	NA	3.8 U	NA	NA	3.8 U	3.8 U	3.8 U	3.9 U	3.9
4,4'-DDT	3.8 U	4 U	4 U	3.8 U	3.8 U	NA	NA	3.8 U	NA	NA	3.8 U	3.8 U	3.8 U	3.9 U	3.9
Aldrin	2 U	2.1 U	2.1 U	1.9 U	1.9 U	NA	NA	2 U	NA	NA	1.9 U	1.9 U	2 U	2 U	2
Aroclor-1016	38 U	40 U	40 U	38 U	38 U	NA	NA	38 U	NA	NA	38 U	38 U	38 U	39 U	39
Aroclor-1221	77 U	81 U	81 U	76 U	77 U	NA	NA	78 U	NA	NA	77 U	77 U	77 U	79 U	79
Aroclor-1232	38 U	40 U	40 U	38 U	38 U	NA	NA	38 U	NA	NA	38 U	38 U	38 U	39 U	39
Aroclor-1242	38 U	40 U	40 U	38 U	38 U	NA	NA	38 U	NA	NA	38 U	38 U	38 U	39 U	39
Aroclor-1248	38 U	40 U	40 U	38 U	38 U	NA	NA	38 U	NA	NA	38 U	38 U	38 U	39 U	39
Aroclor-1254	38 U	40 U	40 U	38 U	38 U	NA	NA	38 U	NA	NA	38 U	38 U	38 U	39 U	39
Aroclor-1260	38 U	40 U	40 U	38 U	38 U	NA	NA	38 U	NA	NA	38 U	38 U	38 U	39 U	39
Dieldrin	3.8 U	4 U	4 U	3.8 U	3.8 U	NA	NA	3.8 U	NA	NA	3.8 U	3.8 U	3.8 U	3.9 U	3.9
Endosulfan I	2 U	2.1 U	2.1 U	1.9 U	1.9 U	NA	NA	2 U	NA	NA	1.9 U	1.9 U	2 U	2 U	2
Endosulfan II	3.8 U	4 U	4 U	3.8 U	3.8 U	NA	NA	3.8 U	NA	NA	3.8 U	3.8 U	3.8 U	3.9 U	3.9
Endosulfan sulfate	3.8 U	4 U	4 U	3.8 U	3.8 U	NA	NA	3.8 U	NA	NA	3.8 U	3.8 U	3.8 U	3.9 U	3.9
Endrin	3.8 U	4 U	4 U	3.8 U	3.8 U	NA	NA	3.8 U	NA	NA	3.8 U	3.8 U	3.8 U	3.9 U	3.9
Endrin aldehyde	3.8 U	4 U	4 U	3.8 U	3.8 U	NA	NA	3.8 U	NA	NA	3.8 U	3.8 U	3.8 U	3.9 U	3.9
Endrin ketone	3.8 U	4 U	4 U	3.8 U	3.8 U	NA	NA	3.8 U	NA	NA	3.8 U	3.8 U	3.8 U	3.9 U	3.9
Heptachlor	2 U	2.1 U	2.1 U	1.9 U	1.9 U	NA	NA	2 U	NA	NA	1.9 U	1.9 U	2 U	2 U	2
Heptachlor epoxide	2 U	2.1 U	2.1 U	1.9 U	1.9 U	NA	NA	2 U	NA	NA	1.9 U	1.9 U	2 U	2 U	2
Methoxychlor	20 U	21 U	21 U	19 U	19 U	NA	NA	20 U	NA	NA	19 U	19 U	20 U	20 U	20
Toxaphene	200 U	210 U	210 U	190 U	190 U	NA	NA	200 U	NA	NA	190 U	190 U	200 U	200 U	200
alpha-BHC	2 U	2.1 U	2.1 U	1.9 U	1.9 U	NA	NA	2 U	NA	NA	1.9 U	1.9 U	2 U	2 U	2
alpha-Chlordane	2 U	2.1 U	2.1 U	1.9 U	1.9 U	NA	NA	2 U	NA	NA	1.9 U	1.9 U	2 U	2 U	2
beta-BHC	2 U	2.1 U	2.1 U	1.9 U	1.9 U	NA	NA	2 U	NA	NA	1.9 U	1.9 U	2 U	2 U	2
delta-BHC	2 U	2.1 U	2.1 U	1.9 U	1.9 U	NA	NA	2 U	NA	NA	1.9 U	1.9 U	2 U	2 U	2
gamma-BHC (Lindane)	2 U	2.1 U	2.1 U	1.9 U	1.9 U	NA	NA	2 U	NA	NA	1.9 U	1.9 U	2 U	2 U	2
gamma-Chlordane	2 U	2.1 U	2.1 U	1.9 U	1.9 U	NA	NA	2 U	NA	NA	1.9 U	1.9 U	2 U	2 U	2
Total Metals (MG/KG)															
Aluminum	12,200	10,400	9,840	10,200 J	10,400 J	NA	NA	10,500 J	NA	NA	7,860 J	8,400 J	8,120 J	11,400 J	11,000
Antimony	0.66 UJ	0.37 UJ	0.24 UJ	0.41 UJ	0.11 UJ	NA	NA	1.2 J	NA	NA	0.14 UJ	0.13 UJ	0.29 UJ	0.29 UJ	0.25
Arsenic	1.7	76.2	45.2	6.7	1 U	NA	NA	436	NA	NA	1.3 U	1.2 U	6.1	5.8	2.6
Barium	13.7 J	16.4 J	19.9	11.5 J	12.6 J	NA	NA	16.9	NA	NA	9.4 J	9.9 J	9.8 J	13.9 J	14.5
Beryllium	0.14 J	0.097 J	0.097 J	0.13 J	0.095 J	NA	NA	0.1 J	NA	NA	0.099 J	0.073 J	0.1 J	0.14 J	0.12
Cadmium	0.42 U	0.44 U	0.43 U	0.32 J	0.029 U	NA	NA	0.063 U	NA	NA	0.4 U	0.39 U	0.39 U	0.41 U	0.39
Calcium	24.2 U	859	888	113 J	141 J	NA	NA	806	NA	NA	514	433	80.4 J	80.1 J	118
Chromium	18.1	14.6	12.3	17 J	11.6 J	NA	NA	11.8 J	NA	NA	5.8 J	5.9 J	13.5 J	20.4 J	15.2
Cobalt	0.55 J	0.37 J	0.33 J	1.1 J	0.6 J	NA	NA	0.69 J	NA	NA	0.37 J	0.39 J	0.94 J-	1.4 J-	0.88
Copper	4 U	7.5	4.4 U	4.8 U	4.4 U	NA	NA	4.3 U	NA	NA	3.9 U	4.3 U	4.7 U	4.9 U	4.5
Iron	4,950	5,750	3,610	7,190 J	2,310 J	NA	NA	3,110 J	NA	NA	1,670 J	1,760 J	7,160 J	11,200 J	5,320
Lead	7.2 J	7.7 J	7.6 J	6.5	6.7	NA	NA	13.2	NA	NA	4.9	4.7	5.2	7.5	6.7
Magnesium	550	457	427 J	399 J	412 J	NA	NA	486 J	NA	NA	259 J	284 J	319 J	444 J	444
Manganese	7.8 J	11.8 J	12.5 J	6.1 J	6.2 J	NA	NA	12.9 J	NA	NA	5.7 J	5.9 J	5.1 J	5.8 J	6.7
Mercury	0.1 U	0.017 J	0.028 J	0.032 U	0.03 U	NA	NA	0.09 U	NA	NA	0.048 U	0.035 U	0.027 U	0.037 U	0.032
Nickel	1.8 J	1.6 J	1.6 J	1.5 J	1.6 J	NA	NA	1.8 J	NA	NA	1.4 J	1.5 J	1.2 J	1.5 J	1.5
Potassium	643 J	409 J	393 J	459 J	358 J	NA	NA	460 J	NA	NA	193 J	202 J	430 J	515 J	461
Selenium	0.76 U	0.36 U	0.43 U	1.7 U	0.36 U	NA	NA	0.46 U	NA	NA	0.11 U	0.45 U	1.4 U	2.5 U	1.1
Silver	0.83 U	0.89 U	0.051 J	0.17 U	0.033 U	NA	NA	0.016 U	NA	NA	0.8 U	0.77 U	0.13 U	0.072 U	0.039
Sodium	37.1 U	41.2 U	41.3 U	32.5 U	27.9 U	NA	NA	33.4 U	NA	NA	38.6 U	41.2 U	36.4 U	35.1 U	37.5
Thallium	1 U	0.14 U	2.2 U	0.54 U	0.26 U	NA	NA	0.095 U	NA	NA	2 U	0.079 U	0.17 U	0.37 U	0.11
Vanadium	24.2	20.2	15.9	25.5	14	NA	NA	15.3	NA	NA	6.8	7.6	20.5	27.8	20.6
Zinc	6.6 U	18.4	21.9	6.1 U	5.7 U	NA	NA	11	NA	NA	4.4 U	4.5 U	5.4 U	6.9 U	7

Notes:
U- Analyte not detected
J- Reported value is estimated
J- - Reported value is biased low
UJ- Analyte not detected. Quantiation limit is imprecise
NA- Not analyzed
Shading represents detection

Station ID		IR95B-IS125	IR95B-IS127		IR95B-IS129	IR95C-IS100	IR95C-IS101		IR95C-IS102	IR95C-IS103	IR95C-IS105	IR95C-IS107	IR95C-IS109	IR95C-IS111	IR95C-IS113	
Sample ID	2	IR95B-IS125-3-4-06D-2	IR95B-IS127-3-4-06D-2	IR95B-IS127D-3-4-06D-2	IR95B-IS129-3-4-06D-2	IR95C-IS100-3-4-06D-1	IR95C-IS101-3-4-06D-1	IR95C-IS101-3-4-06D-2	IR95C-IS102-3-4-06D-1	IR95C-IS103-3-4-06D-2	IR95C-IS105-3-4-06D-2	IR95C-IS107-3-4-06D-2	IR95C-IS109-3-4-06D-2	IR95C-IS111-3-4-06D-2	IR95C-IS113-3-4-06D-2	IR95C-IS113D-3-4-06D
Sample Date		10/05/06	10/05/06	10/05/06	10/05/06	10/03/06	10/03/06	10/03/06	10/03/06	10/03/06	10/03/06	10/03/06	10/03/06	10/03/06	10/03/06	10/03/06
Chemical Name																
Pesticide/Polychlorinated Biphenyls (UG/KG)																
4,4'-DDD	U	3.8 U	3.8 U	3.9 U	3.8 U	NA	NA	3.8 U	NA	3.6 U	3.7 U	3.6 U	3.7 U	3.7 U	3.6 U	3.6
4,4'-DDE	U	3.8 U	3.8 U	3.9 U	3.8 U	NA	NA	3.8 U	NA	3.6 U	3.7 U	3.6 U	3.7 U	3.7 U	3.6 U	3.6
4,4'-DDT	U	3.8 U	3.8 U	3.9 U	3.8 U	NA	NA	3.8 U	NA	3.6 U	3.7 U	3.6 U	3.7 U	3.7 U	3.6 U	3.6
Aldrin	U	1.9 U	2 U	2 U	1.9 U	NA	NA	1.9 U	NA	1.8 U	1.9 U	1.8 U	1.9 U	1.9 U	1.8 U	1.8
Aroclor-1016	U	38 U	38 U	39 U	38 U	NA	NA	38 U	NA	36 U	37 U	36 U	37 U	37 U	36 U	36
Aroclor-1221	U	77 U	77 U	79 U	76 U	NA	NA	76 U	NA	73 U	76 U	73 U	75 U	76 U	72 U	73
Aroclor-1232	U	38 U	38 U	39 U	38 U	NA	NA	38 U	NA	36 U	37 U	36 U	37 U	37 U	36 U	36
Aroclor-1242	U	38 U	38 U	39 U	38 U	NA	NA	38 U	NA	36 U	37 U	36 U	37 U	37 U	36 U	36
Aroclor-1248	U	38 U	38 U	39 U	38 U	NA	NA	38 U	NA	36 U	37 U	36 U	37 U	37 U	36 U	36
Aroclor-1254	U	38 U	38 U	39 U	38 U	NA	NA	38 U	NA	36 U	37 U	36 U	37 U	37 U	36 U	36
Aroclor-1260	U	38 U	38 U	39 U	38 U	NA	NA	38 U	NA	36 U	37 U	36 U	37 U	37 U	36 U	36
Dieldrin	U	3.8 U	3.8 U	3.9 U	3.8 U	NA	NA	3.8 U	NA	3.6 U	3.7 U	3.6 U	3.7 U	3.7 U	3.6 U	3.6
Endosulfan I	U	1.9 U	2 U	2 U	1.9 U	NA	NA	1.9 U	NA	1.8 U	1.9 U	1.8 U	1.9 U	1.9 U	1.8 U	1.8
Endosulfan II	U	3.8 U	3.8 U	3.9 U	3.8 U	NA	NA	3.8 U	NA	3.6 U	3.7 U	3.6 U	3.7 U	3.7 U	3.6 U	3.6
Endosulfan sulfate	U	3.8 U	3.8 U	3.9 U	3.8 U	NA	NA	3.8 U	NA	3.6 U	3.7 U	3.6 U	3.7 U	3.7 U	3.6 U	3.6
Endrin	U	3.8 U	3.8 U	3.9 U	3.8 U	NA	NA	3.8 U	NA	3.6 U	3.7 U	3.6 U	3.7 U	3.7 U	3.6 U	3.6
Endrin aldehyde	U	3.8 U	3.8 U	3.9 U	3.8 U	NA	NA	3.8 U	NA	3.6 U	3.7 U	3.6 U	3.7 U	3.7 U	3.6 U	3.6
Endrin ketone	U	3.8 U	3.8 U	3.9 U	3.8 U	NA	NA	3.8 U	NA	3.6 U	3.7 U	3.6 U	3.7 U	3.7 U	3.6 U	3.6
Heptachlor	U	1.9 U	2 U	2 U	1.9 U	NA	NA	1.9 U	NA	1.8 U	1.9 U	1.8 U	1.9 U	1.9 U	1.8 U	1.8
Heptachlor epoxide	U	1.9 U	2 U	2 U	1.9 U	NA	NA	1.9 U	NA	1.8 U	1.9 U	1.8 U	1.9 U	1.9 U	1.8 U	1.8
Methoxychlor	U	19 U	20 U	20 U	19 U	NA	NA	19 U	NA	18 U	19 U	18 U	19 U	19 U	18 U	18
Toxaphene	U	190 U	200 U	200 U	190 U	NA	NA	190 U	NA	180 U	190 U	180 U	190 U	190 U	180 U	180
alpha-BHC	U	1.9 U	2 U	2 U	1.9 U	NA	NA	1.9 U	NA	1.8 U	1.9 U	1.8 U	1.9 U	1.9 U	1.8 U	1.8
alpha-Chlordane	U	1.9 U	2 U	2 U	1.9 U	NA	NA	1.9 U	NA	1.8 U	1.9 U	1.8 U	1.9 U	1.9 U	1.8 U	1.8
beta-BHC	U	1.9 U	2 U	2 U	1.9 U	NA	NA	1.9 U	NA	1.8 U	1.9 U	1.8 U	1.9 U	1.9 U	1.8 U	1.8
delta-BHC	U	1.9 U	2 U	2 U	1.9 U	NA	NA	1.9 U	NA	1.8 U	1.9 U	1.8 U	1.9 U	1.9 U	1.8 U	1.8
gamma-BHC (Lindane)	U	1.9 U	2 U	2 U	1.9 U	NA	NA	1.9 U	NA	1.8 U	1.9 U	1.8 U	1.9 U	1.9 U	1.8 U	1.8
gamma-Chlordane	U	1.9 U	2 U	2 U	1.9 U	NA	NA	1.9 U	NA	1.8 U	1.9 U	1.8 U	1.9 U	1.9 U	1.8 U	1.8
Total Metals (MG/KG)																
Aluminum	J	11,700 J	12,000 J	11,100	7,510 J	NA	NA	11,100 J	NA	4,220 J	11,700 J	2,880 J	11,800 J	10,300	6,020 J	6,320
Antimony	UJ	0.31 UJ	0.19 UJ	0.46 UJ	0.18 UJ	NA	NA	4.9 UJ	NA	0.098 UJ	0.063 UJ	0.14 UJ	0.58 UJ	0.12 UJ	4.6 UJ	0.057
Arsenic		2	3.1	3.6	1.7	NA	NA	0.094 UJ	NA	1.3 J-	0.79 UJ	0.13 UJ	0.76 UJ	0.49 U	1.2 J-	0.96
Barium	J	16.2	13.5 J	12.5 J	8.3 J	NA	NA	13.3 J	NA	6.4 J	16.9 J	5.8 J	14.6 J	12.6 J	9.7 J	9.9
Beryllium	J	0.12 J	0.14 J	0.056 J	0.082 J	NA	NA	0.099 J	NA	0.068 J	0.14 J	0.036 J	0.15 J	0.11 J	0.097 J	0.096
Cadmium	U	0.39 U	0.4 U	0.31 J	0.41 U	NA	NA	0.4 UJ	NA	0.38 UJ	0.4 UJ	0.37 UJ	0.4 UJ	0.39 U	0.38 UJ	0.37
Calcium	J	118 J	158 J	248 J	107 J	NA	NA	89.7 UJ	NA	36.1 UJ	400 UJ	370 UJ	400 UJ	390 UJ	380 UJ	196
Chromium	J	14.7 J	18.5 J	19.4	10.2 J	NA	NA	11 J	NA	6.3 J-	14.2 J	3 J-	14.2 J	11.4 J	8.8 J	9
Cobalt	J-	0.91 J-	0.97 J-	1.1 J	0.51 J-	NA	NA	0.71 J	NA	0.24 U	0.66 J	0.18 U	0.71 J	0.57 J	0.4 U	0.44
Copper	U	5.1 U	5.2 U	6 U	4.3 U	NA	NA	3.8 U	NA	3.2 U	4.8 U	2.6 U	4.5 U	4.1 U	4 U	3.6
Iron	J	5,240 J	5,910 J	6,900	2,780 J	NA	NA	3,040 J	NA	3,100 J	3,770 J	748 J	3,790 J	3,490 J	4,500 J	3,930
Lead		7.1	7.1	6.7	6	NA	NA	5.9 J	NA	3.3 J	6.5 J	3.7 J	5.8 J	6	4.3 J	4.3
Magnesium	J	473 J	494 J	444	323 J	NA	NA	341 J	NA	174 J	421 J	81.8 J	415 J	352 J	247 J	263
Manganese	J	7.4 J	7.1 J	6.1	5 J	NA	NA	7.1 J	NA	3.9 J	7 J	4.3 J	8.5 J	5.8 J	5.2 J	5.3
Mercury	U	0.032 U	0.026 U	0.027 U	0.027 U	NA	NA	0.099 U	NA	0.1 U	0.099 U	0.095 U	0.1 U	0.091 UJ	0.039 J	0.099
Nickel	J	1.8 J	1.7 J	2.2 J	1.2 J	NA	NA	2.4 J	NA	1.1 J	2.4 J	0.91 J	2.5 J	2.1 J	1.4 J	1.5
Potassium	J	449 J	553 J	461 J	367 J	NA	NA	459 J	NA	329 J	653 J	114 J	790 J	550 J	480 J	487
Selenium	U	1.1 U	1.5 U	1.5 U	0.59 U	NA	NA	0.31 U	NA	0.25 U	0.42 U	0.39 U	0.22 U	0.52 U	0.16 U	0.7
Silver	U	0.019 U	0.79 U	0.2 U	0.023 U	NA	NA	0.082 U	NA	0.024 U	0.045 U	0.03 U	0.023 U	0.77 U	0.056 U	0.04
Sodium	U	43.2 U	63.6 U	42.8 U	32.3 U	NA	NA	46 U	NA	30.5 U	43.7 U	24.1 U	36.8 U	38.5 UJ	39 U	33.5
Thallium	U	0.2 U	0.16 U	0.46 U	2 U	NA	NA	0.24 U	NA	0.095 U	0.74 U	0.18 U	2 U	0.18 U	0.72 U	0.36
Vanadium		20	23.1	22.9 J	12.9	NA	NA	15.4 J	NA	9.6 J	23.9 J	2.9 J	20.7 J	16.6	13.3 J	13.7
Zinc	U	6.8 U	7.7 U	9.7 U	6.5 U	NA	NA	5.8 U	NA	3.9 U	6.1 U	3.1 U	8.2 U	6.1 UJ	5 U	4.9

Notes:
U- Analyte not detected
J- Reported value is estimated
J- - Reported value is biased low
UJ- Analyte not detected. Quantiation limit is imprecise
NA- Not analyzed
Shading represents detection

Station ID		IR95C-IS115	IR95C-IS117	IR95C-IS119	IR95C-IS121	IR95C-IS123		IR95C-IS125	IR95C-IS127
Sample ID	2	IR95C-IS115-3-4-06D-2	IR95C-IS117-3-4-06D-2	IR95C-IS119-3-4-06D-2	IR95C-IS121-3-4-06D-2	IR95C-IS123-3-4-06D-2	IR95C-IS123D-3-4-06D-2	IR95C-IS125-3-4-06D-2	IR95C-IS127-3-4-06D-2
Sample Date		10/03/06	10/03/06	10/03/06	10/03/06	10/03/06	10/03/06	10/03/06	10/03/06
Chemical Name									
Pesticide/Polychlorinated Biphenyls (UG/KG)									
4,4'-DDD	U	3.8 U	3.8 U	3.6 U	3.7 U	3.7 U	3.8 U	3.6 U	3.9 U
4,4'-DDE	U	3.8 U	3.8 U	3.6 U	3.7 U	3.7 U	3.8 U	3.6 U	3.9 U
4,4'-DDT	U	3.8 U	3.8 U	3.6 U	3.7 U	5.1 J	3.8 U	3.6 U	3.9 U
Aldrin	U	2 U	2 U	1.8 U	1.9 U	1.9 U	1.9 U	1.9 U	2 U
Aroclor-1016	U	38 U	38 U	36 U	37 U	37 U	38 U	36 U	39 U
Aroclor-1221	U	78 U	78 U	73 U	74 U	76 U	77 U	74 U	79 U
Aroclor-1232	U	38 U	38 U	36 U	37 U	37 U	38 U	36 U	39 U
Aroclor-1242	U	38 U	38 U	36 U	37 U	37 U	38 U	36 U	39 U
Aroclor-1248	U	38 U	38 U	36 U	37 U	37 U	38 U	36 U	39 U
Aroclor-1254	U	38 U	38 U	36 U	37 U	37 U	38 U	36 U	39 U
Aroclor-1260	U	38 U	38 U	36 U	37 U	37 U	38 U	36 U	39 U
Dieldrin	U	3.8 U	3.8 U	3.6 U	3.7 U	3.7 U	3.8 U	3.6 U	3.9 U
Endosulfan I	U	2 U	2 U	1.8 U	1.9 U	1.9 U	1.9 U	1.9 U	2 U
Endosulfan II	U	3.8 U	3.8 U	3.6 U	3.7 U	3.7 U	3.8 U	3.6 U	3.9 U
Endosulfan sulfate	U	3.8 U	3.8 U	3.6 U	3.7 U	3.7 U	3.8 U	3.6 U	3.9 U
Endrin	U	3.8 U	3.8 U	3.6 U	3.7 U	3.7 U	3.8 U	3.6 U	3.9 U
Endrin aldehyde	U	3.8 U	3.8 U	3.6 U	3.7 U	2.3 J	3.8 U	3.6 U	3.9 U
Endrin ketone	U	3.8 U	3.8 U	3.6 U	3.7 U	3.7 U	3.8 U	3.6 U	3.9 U
Heptachlor	U	2 U	2 U	1.8 U	1.9 U	1.9 U	1.9 U	1.9 U	2 U
Heptachlor epoxide	U	2 U	2 U	1.8 U	1.9 U	1.9 U	1.9 U	1.9 U	2 U
Methoxychlor	U	20 U	20 U	18 U	19 U	47	23 J	19 U	20 U
Toxaphene	U	200 U	200 U	180 U	190 U	190 U	190 U	190 U	200 U
alpha-BHC	U	2 U	2 U	1.8 U	1.9 U	1.9 U	1.9 U	1.9 U	2 U
alpha-Chlordane	U	2 U	2 U	1.8 U	1.9 U	1.9 U	1.9 U	1.9 U	2 U
beta-BHC	U	2 U	2 U	1.8 U	1.9 U	1.9 U	1.9 U	1.9 U	2 U
delta-BHC	U	2 U	2 U	1.8 U	1.9 U	1.9 U	1.9 U	1.9 U	2 U
gamma-BHC (Lindane)	U	2 U	2 U	1.8 U	1.9 U	1.9 U	1.9 U	1.9 U	2 U
gamma-Chlordane	U	2 U	2 U	1.8 U	1.9 U	1.9 U	1.9 U	1.9 U	2 U
Total Metals (MG/KG)									
Aluminum	J	13,200	21,300	846	5,480	2,360	2,580	2,000	21,600
Antimony	UJ	4.8 UJ	5 UJ	0.049 UJ	4.8 UJ	4.8 UJ	0.086 UJ	0.16 UJ	0.36 UJ
Arsenic	UJ	1.4	2.2	0.079 U	1.7	0.072 U	0.18 U	0.12 U	1.8
Barium	J	14.1 J	18 J	2.4 J	7.3 J	19.2 J	24.7 J	3.6 J	20.7 J
Beryllium	J	0.06 J	0.12 J	0.02 J	0.068 J	0.038 J	0.044 J	0.031 J	0.11 J
Cadmium	UJ	0.4 U	0.42 U	0.37 U	0.4 U	0.4 U	0.39 U	0.38 U	0.42 U
Calcium	UJ	400 U	420 UJ	27.9 UJ	8.9 UJ	155 J	161 J	32.5 UJ	142 J
Chromium	J	13.1	20 J	1.8 J	12.3 J	2.4 J	2.5 J	2.7 J	19.8 J
Cobalt	J	0.69 J	1.1 J	0.13 J	0.38 J	0.14 J	0.15 J	0.15 J	1 J
Copper	U	4 U	5 U	2.1 U	3.3 U	2.9 U	3.3 U	2.8 U	5.1 U
Iron	J	6,850	11,600 J	406 J	3,880 J	1,070 J	1,180 J	983 J	9,830 J
Lead	J	6.1	6.9	2.4	4	3	3.4	3.2	7.9
Magnesium	J	310 J	491 J	33.2 J	185 J	54 J	60.6 J	52.4 J	551 J
Manganese	J	5.3	8.8 J	3.2 J	4.4 J	3.9 J	4.2 J	3.7 J	7.8 J
Mercury	U	0.11 UJ	0.012 J-	0.09 UJ	0.092 UJ	0.1 UJ	0.095 UJ	0.089 UJ	0.11 UJ
Nickel	J	2.5 J	3.9 J	0.31 UJ	3.1 J	0.6 UJ	0.68 UJ	0.61 UJ	3.8 J
Potassium	J	275 J	485 J	62.2 J	332 J	68.9 J	72.1 J	76.3 J	453 J
Selenium	U	0.28 U	0.98 U	0.38 U	0.55 U	0.6 U	0.51 U	0.38 U	0.71 U
Silver	U	0.062 U	0.073 U	0.048 U	0.049 U	0.018 U	0.78 U	0.021 U	0.11 U
Sodium	U	26.5 U	52.4 UJ	20.7 UJ	29.4 UJ	33 UJ	43.2 UJ	29.5 UJ	54 UJ
Thallium	U	1.1 U	0.61 U	0.13 U	0.35 U	0.12 U	0.16 U	0.13 U	0.38 U
Vanadium	J	20.6	31.3	1.6 J	17.3	2.7 J	3.1 J	2.7 J	26.6
Zinc	U	5.8 U	7.9 UJ	2.2 UJ	4.9 UJ	2.5 UJ	2.6 UJ	3 UJ	7.8 UJ

Notes:
U- Analyte not detected
J- Reported value is estimated
J- - Reported value is biased low
UJ- Analyte not detected. Quantiation limit is imprecise
NA- Not analyzed
Shading represents detection

Site 95
Surface Soil Raw Analytical Data
October 2006

Station ID	IR95B-IS100	IR95B-IS101	IR95B-IS102	IR95B-IS103	IR95B-IS104	IR95B-IS105	IR95B-IS106	IR95B-IS107		IR95B-IS108	IR95B-IS109	IR95B-IS110	IR95B-IS111	IR95B-IS112	IR95B-IS113
Sample ID	IR95B-IS100-0-1-06D-2	IR95B-IS101-0-1-06D-2	IR95B-IS102-0-1-06D-2	IR95B-IS103-0-1-06D-2	IR95B-IS104-0-1-06D-2	IR95B-IS105-0-1-06D-2	IR95B-IS106-0-1-06D-2	IR95B-IS107-0-1-06D-2	IR95B-IS107D-0-1-06D-2	IR95B-IS108-0-1-06D-2	IR95B-IS109-0-1-06D-2	IR95B-IS110-0-1-06D-2	IR95B-IS111-0-1-06D-2	IR95B-IS112-0-1-06D-2	IR95B-IS113-0-1-06D-2
Sample Date	10/05/06	10/05/06	10/05/06	10/05/06	10/05/06	10/05/06	10/05/06	10/05/06	10/05/06	10/05/06	10/05/06	10/05/06	10/05/06	10/05/06	10/05/06
Chemical Name															
Volatile Organic Compounds (UG/KG)															
1,1,1-Trichloroethane	NA	NA	NA	NA	NA	NA	NA	NA	NA	NA	NA	NA	NA	NA	NA
1,1,2,2-Tetrachloroethane	NA	NA	NA	NA	NA	NA	NA	NA	NA	NA	NA	NA	NA	NA	NA
1,1,2-Trichloro-1,2,2-trifluoroethane(Freon-113)	NA	NA	NA	NA	NA	NA	NA	NA	NA	NA	NA	NA	NA	NA	NA
1,1,2-Trichloroethane	NA	NA	NA	NA	NA	NA	NA	NA	NA	NA	NA	NA	NA	NA	NA
1,1-Dichloroethane	NA	NA	NA	NA	NA	NA	NA	NA	NA	NA	NA	NA	NA	NA	NA
1,1-Dichloroethene	NA	NA	NA	NA	NA	NA	NA	NA	NA	NA	NA	NA	NA	NA	NA
1,2,4-Trichlorobenzene	NA	NA	NA	NA	NA	NA	NA	NA	NA	NA	NA	NA	NA	NA	NA
1,2-Dibromo-3-chloropropane	NA	NA	NA	NA	NA	NA	NA	NA	NA	NA	NA	NA	NA	NA	NA
1,2-Dibromoethane	NA	NA	NA	NA	NA	NA	NA	NA	NA	NA	NA	NA	NA	NA	NA
1,2-Dichlorobenzene	NA	NA	NA	NA	NA	NA	NA	NA	NA	NA	NA	NA	NA	NA	NA
1,2-Dichloroethane	NA	NA	NA	NA	NA	NA	NA	NA	NA	NA	NA	NA	NA	NA	NA
1,2-Dichloropropane	NA	NA	NA	NA	NA	NA	NA	NA	NA	NA	NA	NA	NA	NA	NA
1,3-Dichlorobenzene	NA	NA	NA	NA	NA	NA	NA	NA	NA	NA	NA	NA	NA	NA	NA
1,4-Dichlorobenzene	NA	NA	NA	NA	NA	NA	NA	NA	NA	NA	NA	NA	NA	NA	NA
2-Butanone	NA	NA	NA	NA	NA	NA	NA	NA	NA	NA	NA	NA	NA	NA	NA
2-Hexanone	NA	NA	NA	NA	NA	NA	NA	NA	NA	NA	NA	NA	NA	NA	NA
4-Methyl-2-pentanone	NA	NA	NA	NA	NA	NA	NA	NA	NA	NA	NA	NA	NA	NA	NA
Acetone	NA	NA	NA	NA	NA	NA	NA	NA	NA	NA	NA	NA	NA	NA	NA
Benzene	NA	NA	NA	NA	NA	NA	NA	NA	NA	NA	NA	NA	NA	NA	NA
Bromodichloromethane	NA	NA	NA	NA	NA	NA	NA	NA	NA	NA	NA	NA	NA	NA	NA
Bromoform	NA	NA	NA	NA	NA	NA	NA	NA	NA	NA	NA	NA	NA	NA	NA
Bromomethane	NA	NA	NA	NA	NA	NA	NA	NA	NA	NA	NA	NA	NA	NA	NA
Carbon disulfide	NA	NA	NA	NA	NA	NA	NA	NA	NA	NA	NA	NA	NA	NA	NA
Carbon tetrachloride	NA	NA	NA	NA	NA	NA	NA	NA	NA	NA	NA	NA	NA	NA	NA
Chlorobenzene	NA	NA	NA	NA	NA	NA	NA	NA	NA	NA	NA	NA	NA	NA	NA
Chloroethane	NA	NA	NA	NA	NA	NA	NA	NA	NA	NA	NA	NA	NA	NA	NA
Chloroform	NA	NA	NA	NA	NA	NA	NA	NA	NA	NA	NA	NA	NA	NA	NA
Chloromethane	NA	NA	NA	NA	NA	NA	NA	NA	NA	NA	NA	NA	NA	NA	NA
Cyclohexane	NA	NA	NA	NA	NA	NA	NA	NA	NA	NA	NA	NA	NA	NA	NA
Dibromochloromethane	NA	NA	NA	NA	NA	NA	NA	NA	NA	NA	NA	NA	NA	NA	NA
Dichlorodifluoromethane (Freon-12)	NA	NA	NA	NA	NA	NA	NA	NA	NA	NA	NA	NA	NA	NA	NA
Ethylbenzene	NA	NA	NA	NA	NA	NA	NA	NA	NA	NA	NA	NA	NA	NA	NA
Isopropylbenzene	NA	NA	NA	NA	NA	NA	NA	NA	NA	NA	NA	NA	NA	NA	NA
Methyl acetate	NA	NA	NA	NA	NA	NA	NA	NA	NA	NA	NA	NA	NA	NA	NA
Methyl-tert-butyl ether (MTBE)	NA	NA	NA	NA	NA	NA	NA	NA	NA	NA	NA	NA	NA	NA	NA
Methylcyclohexane	NA	NA	NA	NA	NA	NA	NA	NA	NA	NA	NA	NA	NA	NA	NA
Methylene chloride	NA	NA	NA	NA	NA	NA	NA	NA	NA	NA	NA	NA	NA	NA	NA
Styrene	NA	NA	NA	NA	NA	NA	NA	NA	NA	NA	NA	NA	NA	NA	NA
Tetrachloroethene	NA	NA	NA	NA	NA	NA	NA	NA	NA	NA	NA	NA	NA	NA	NA
Toluene	NA	NA	NA	NA	NA	NA	NA	NA	NA	NA	NA	NA	NA	NA	NA
Trichloroethene	NA	NA	NA	NA	NA	NA	NA	NA	NA	NA	NA	NA	NA	NA	NA
Trichlorofluoromethane(Freon-11)	NA	NA	NA	NA	NA	NA	NA	NA	NA	NA	NA	NA	NA	NA	NA
Vinyl chloride	NA	NA	NA	NA	NA	NA	NA	NA	NA	NA	NA	NA	NA	NA	NA
Xylene, total	NA	NA	NA	NA	NA	NA	NA	NA	NA	NA	NA	NA	NA	NA	NA
cis-1,2-Dichloroethene	NA	NA	NA	NA	NA	NA	NA	NA	NA	NA	NA	NA	NA	NA	NA
cis-1,3-Dichloropropene	NA	NA	NA	NA	NA	NA	NA	NA	NA	NA	NA	NA	NA	NA	NA
trans-1,2-Dichloroethene	NA	NA	NA	NA	NA	NA	NA	NA	NA	NA	NA	NA	NA	NA	NA
trans-1,3-Dichloropropene	NA	NA	NA	NA	NA	NA	NA	NA	NA	NA	NA	NA	NA	NA	NA

Site 95
Surface Soil Raw Analytical Data
October 2006

Station ID	IR95B-IS114		IR95B-IS115			IR95B-IS116		IR95B-IS117	IR95B-IS118	IR95B-IS119	IR95B-IS120	IR95B-IS121	IR95B-IS122	IR95B-IS123	IR95B-IS124
Sample ID	IR95B-IS114-0-1-06D-1	IR95B-IS114-0-1-06D-2	IR95B-IS115-0-1-06D-1	IR95B-IS115-0-1-06D-2	IR95B-IS115D-0-1-06D-2	IR95B-IS116-0-1-06D-1	IR95B-IS116-0-1-06D-2	IR95B-IS117-0-1-06D-2	IR95B-IS118-0-1-06D-2	IR95B-IS119-0-1-06D-2	IR95B-IS120-0-1-06D-2	IR95B-IS121-0-1-06D-2	IR95B-IS122-0-1-06D-2	IR95B-IS123-0-1-06D-2	IR95B-IS124-0-1-06D-2
Sample Date	10/03/06	10/05/06	10/03/06	10/05/06	10/05/06	10/03/06	10/05/06	10/05/06	10/05/06	10/05/06	10/05/06	10/05/06	10/05/06	10/05/06	10/05/06
Chemical Name															
Volatile Organic Compounds (UG/KG)															
1,1,1-Trichloroethane	10 U	NA	14 U	NA	NA	12 U	NA	NA	NA	NA	NA	NA	NA	NA	NA
1,1,2,2-Tetrachloroethane	10 U	NA	14 U	NA	NA	12 U	NA	NA	NA	NA	NA	NA	NA	NA	NA
1,1,2-Trichloro-1,2,2-trifluoroethane(Freon-113)	10 U	NA	14 U	NA	NA	12 U	NA	NA	NA	NA	NA	NA	NA	NA	NA
1,1,2-Trichloroethane	10 U	NA	14 U	NA	NA	12 U	NA	NA	NA	NA	NA	NA	NA	NA	NA
1,1-Dichloroethane	10 U	NA	14 U	NA	NA	12 U	NA	NA	NA	NA	NA	NA	NA	NA	NA
1,1-Dichloroethene	10 U	NA	14 U	NA	NA	12 U	NA	NA	NA	NA	NA	NA	NA	NA	NA
1,2,4-Trichlorobenzene	10 U	NA	14 U	NA	NA	12 U	NA	NA	NA	NA	NA	NA	NA	NA	NA
1,2-Dibromo-3-chloropropane	10 U	NA	14 U	NA	NA	12 U	NA	NA	NA	NA	NA	NA	NA	NA	NA
1,2-Dibromoethane	10 U	NA	14 U	NA	NA	12 U	NA	NA	NA	NA	NA	NA	NA	NA	NA
1,2-Dichlorobenzene	10 U	NA	14 U	NA	NA	12 U	NA	NA	NA	NA	NA	NA	NA	NA	NA
1,2-Dichloroethane	10 U	NA	14 U	NA	NA	12 U	NA	NA	NA	NA	NA	NA	NA	NA	NA
1,2-Dichloropropane	10 U	NA	14 U	NA	NA	12 U	NA	NA	NA	NA	NA	NA	NA	NA	NA
1,3-Dichlorobenzene	10 U	NA	14 U	NA	NA	12 U	NA	NA	NA	NA	NA	NA	NA	NA	NA
1,4-Dichlorobenzene	10 U	NA	14 U	NA	NA	12 U	NA	NA	NA	NA	NA	NA	NA	NA	NA
2-Butanone	10 U	NA	14 U	NA	NA	12 U	NA	NA	NA	NA	NA	NA	NA	NA	NA
2-Hexanone	10 U	NA	14 U	NA	NA	12 U	NA	NA	NA	NA	NA	NA	NA	NA	NA
4-Methyl-2-pentanone	10 U	NA	14 U	NA	NA	12 U	NA	NA	NA	NA	NA	NA	NA	NA	NA
Acetone	10 U	NA	14 U	NA	NA	12 U	NA	NA	NA	NA	NA	NA	NA	NA	NA
Benzene	10 U	NA	14 U	NA	NA	12 U	NA	NA	NA	NA	NA	NA	NA	NA	NA
Bromodichloromethane	10 U	NA	14 U	NA	NA	12 U	NA	NA	NA	NA	NA	NA	NA	NA	NA
Bromoform	10 U	NA	14 U	NA	NA	12 U	NA	NA	NA	NA	NA	NA	NA	NA	NA
Bromomethane	10 U	NA	14 U	NA	NA	12 U	NA	NA	NA	NA	NA	NA	NA	NA	NA
Carbon disulfide	10 U	NA	14 U	NA	NA	12 U	NA	NA	NA	NA	NA	NA	NA	NA	NA
Carbon tetrachloride	10 U	NA	14 U	NA	NA	12 U	NA	NA	NA	NA	NA	NA	NA	NA	NA
Chlorobenzene	10 U	NA	14 U	NA	NA	12 U	NA	NA	NA	NA	NA	NA	NA	NA	NA
Chloroethane	10 U	NA	14 U	NA	NA	12 U	NA	NA	NA	NA	NA	NA	NA	NA	NA
Chloroform	10 U	NA	14 U	NA	NA	12 U	NA	NA	NA	NA	NA	NA	NA	NA	NA
Chloromethane	10 U	NA	14 U	NA	NA	12 U	NA	NA	NA	NA	NA	NA	NA	NA	NA
Cyclohexane	10 U	NA	14 U	NA	NA	12 U	NA	NA	NA	NA	NA	NA	NA	NA	NA
Dibromochloromethane	10 U	NA	14 U	NA	NA	12 U	NA	NA	NA	NA	NA	NA	NA	NA	NA
Dichlorodifluoromethane (Freon-12)	10 U	NA	14 U	NA	NA	12 U	NA	NA	NA	NA	NA	NA	NA	NA	NA
Ethylbenzene	10 U	NA	14 U	NA	NA	12 U	NA	NA	NA	NA	NA	NA	NA	NA	NA
Isopropylbenzene	10 U	NA	14 U	NA	NA	12 U	NA	NA	NA	NA	NA	NA	NA	NA	NA
Methyl acetate	10 UJ	NA	14 UJ	NA	NA	12 UJ	NA	NA	NA	NA	NA	NA	NA	NA	NA
Methyl-tert-butyl ether (MTBE)	10 U	NA	14 U	NA	NA	12 U	NA	NA	NA	NA	NA	NA	NA	NA	NA
Methylcyclohexane	10 U	NA	14 U	NA	NA	12 U	NA	NA	NA	NA	NA	NA	NA	NA	NA
Methylene chloride	10 U	NA	14 U	NA	NA	12 U	NA	NA	NA	NA	NA	NA	NA	NA	NA
Styrene	10 U	NA	14 U	NA	NA	12 U	NA	NA	NA	NA	NA	NA	NA	NA	NA
Tetrachloroethene	10 U	NA	14 U	NA	NA	12 U	NA	NA	NA	NA	NA	NA	NA	NA	NA
Toluene	10 U	NA	14 U	NA	NA	12 U	NA	NA	NA	NA	NA	NA	NA	NA	NA
Trichloroethene	10 U	NA	14 U	NA	NA	12 U	NA	NA	NA	NA	NA	NA	NA	NA	NA
Trichlorofluoromethane(Freon-11)	10 UJ	NA	14 UJ	NA	NA	12 UJ	NA	NA	NA	NA	NA	NA	NA	NA	NA
Vinyl chloride	10 U	NA	14 U	NA	NA	12 U	NA	NA	NA	NA	NA	NA	NA	NA	NA
Xylene, total	10 U	NA	14 U	NA	NA	12 U	NA	NA	NA	NA	NA	NA	NA	NA	NA
cis-1,2-Dichloroethene	10 U	NA	14 U	NA	NA	12 U	NA	NA	NA	NA	NA	NA	NA	NA	NA
cis-1,3-Dichloropropene	10 U	NA	14 U	NA	NA	12 U	NA	NA	NA	NA	NA	NA	NA	NA	NA
trans-1,2-Dichloroethene	10 U	NA	14 U	NA	NA	12 U	NA	NA	NA	NA	NA	NA	NA	NA	NA
trans-1,3-Dichloropropene	10 U	NA	14 U	NA	NA	12 U	NA	NA	NA	NA	NA	NA	NA	NA	NA

Site 95
Surface Soil Raw Analytical Data
October 2006

Station ID	IR95B-IS125		IR95B-IS126	IR95B-IS127	IR95B-IS128	IR95B-IS129	IR95B-IS130
Sample ID	IR95B-IS125-0-1-06D-2	IR95B-IS125D-0-1-06D-2	IR95B-IS126-0-1-06D-2	IR95B-IS127-0-1-06D-2	IR95B-IS128-0-1-06D-2	IR95B-IS129-0-1-06D-2	IR95B-IS130-0-1-06D-2
Sample Date	10/05/06	10/05/06	10/05/06	10/05/06	10/05/06	10/05/06	10/05/06
Chemical Name							
Volatile Organic Compounds (UG/KG)							
1,1,1-Trichloroethane	NA	NA	NA	NA	NA	NA	NA
1,1,2,2-Tetrachloroethane	NA	NA	NA	NA	NA	NA	NA
1,1,2-Trichloro-1,2,2-trifluoroethane(Freon-113)	NA	NA	NA	NA	NA	NA	NA
1,1,2-Trichloroethane	NA	NA	NA	NA	NA	NA	NA
1,1-Dichloroethane	NA	NA	NA	NA	NA	NA	NA
1,1-Dichloroethene	NA	NA	NA	NA	NA	NA	NA
1,2,4-Trichlorobenzene	NA	NA	NA	NA	NA	NA	NA
1,2-Dibromo-3-chloropropane	NA	NA	NA	NA	NA	NA	NA
1,2-Dibromoethane	NA	NA	NA	NA	NA	NA	NA
1,2-Dichlorobenzene	NA	NA	NA	NA	NA	NA	NA
1,2-Dichloroethane	NA	NA	NA	NA	NA	NA	NA
1,2-Dichloropropane	NA	NA	NA	NA	NA	NA	NA
1,3-Dichlorobenzene	NA	NA	NA	NA	NA	NA	NA
1,4-Dichlorobenzene	NA	NA	NA	NA	NA	NA	NA
2-Butanone	NA	NA	NA	NA	NA	NA	NA
2-Hexanone	NA	NA	NA	NA	NA	NA	NA
4-Methyl-2-pentanone	NA	NA	NA	NA	NA	NA	NA
Acetone	NA	NA	NA	NA	NA	NA	NA
Benzene	NA	NA	NA	NA	NA	NA	NA
Bromodichloromethane	NA	NA	NA	NA	NA	NA	NA
Bromoform	NA	NA	NA	NA	NA	NA	NA
Bromomethane	NA	NA	NA	NA	NA	NA	NA
Carbon disulfide	NA	NA	NA	NA	NA	NA	NA
Carbon tetrachloride	NA	NA	NA	NA	NA	NA	NA
Chlorobenzene	NA	NA	NA	NA	NA	NA	NA
Chloroethane	NA	NA	NA	NA	NA	NA	NA
Chloroform	NA	NA	NA	NA	NA	NA	NA
Chloromethane	NA	NA	NA	NA	NA	NA	NA
Cyclohexane	NA	NA	NA	NA	NA	NA	NA
Dibromochloromethane	NA	NA	NA	NA	NA	NA	NA
Dichlorodifluoromethane (Freon-12)	NA	NA	NA	NA	NA	NA	NA
Ethylbenzene	NA	NA	NA	NA	NA	NA	NA
Isopropylbenzene	NA	NA	NA	NA	NA	NA	NA
Methyl acetate	NA	NA	NA	NA	NA	NA	NA
Methyl-tert-butyl ether (MTBE)	NA	NA	NA	NA	NA	NA	NA
Methylcyclohexane	NA	NA	NA	NA	NA	NA	NA
Methylene chloride	NA	NA	NA	NA	NA	NA	NA
Styrene	NA	NA	NA	NA	NA	NA	NA
Tetrachloroethene	NA	NA	NA	NA	NA	NA	NA
Toluene	NA	NA	NA	NA	NA	NA	NA
Trichloroethene	NA	NA	NA	NA	NA	NA	NA
Trichlorofluoromethane(Freon-11)	NA	NA	NA	NA	NA	NA	NA
Vinyl chloride	NA	NA	NA	NA	NA	NA	NA
Xylene, total	NA	NA	NA	NA	NA	NA	NA
cis-1,2-Dichloroethene	NA	NA	NA	NA	NA	NA	NA
cis-1,3-Dichloropropene	NA	NA	NA	NA	NA	NA	NA
trans-1,2-Dichloroethene	NA	NA	NA	NA	NA	NA	NA
trans-1,3-Dichloropropene	NA	NA	NA	NA	NA	NA	NA

Site 95
Surface Soil Raw Analytical Data
October 2006

Station ID	IR95B-IS100	IR95B-IS101	IR95B-IS102	IR95B-IS103	IR95B-IS104	IR95B-IS105	IR95B-IS106	IR95B-IS107		IR95B-IS108	IR95B-IS109	IR95B-IS110	IR95B-IS111	IR95B-IS112	IR95B-IS113
Sample ID	IR95B-IS100-0-1-06D-2	IR95B-IS101-0-1-06D-2	IR95B-IS102-0-1-06D-2	IR95B-IS103-0-1-06D-2	IR95B-IS104-0-1-06D-2	IR95B-IS105-0-1-06D-2	IR95B-IS106-0-1-06D-2	IR95B-IS107-0-1-06D-2	IR95B-IS107D-0-1-06D-2	IR95B-IS108-0-1-06D-2	IR95B-IS109-0-1-06D-2	IR95B-IS110-0-1-06D-2	IR95B-IS111-0-1-06D-2	IR95B-IS112-0-1-06D-2	IR95B-IS113-0-1-06D-2
Sample Date	10/05/06	10/05/06	10/05/06	10/05/06	10/05/06	10/05/06	10/05/06	10/05/06	10/05/06	10/05/06	10/05/06	10/05/06	10/05/06	10/05/06	10/05/06
Chemical Name															
Semi-volatile Organic Compounds (UG/KG)															
1,1-Biphenyl	400 U	390 U	410 U	410 U	400 U	370 U	380 U	400 U	400 U	410 U	390 U	380 U	380 U	390 U	400 U
2,2'-Oxybis(1-chloropropane)	400 U	390 U	410 U	410 U	400 U	370 U	380 U	400 U	400 U	410 U	390 U	380 U	380 U	390 U	400 U
2,4,5-Trichlorophenol	1,000 U	980 U	1,000 U	1,000 U	1,000 U	930 U	940 U	1,000 U	1,000 U	1,000 U	970 U	940 U	950 U	970 U	1,000 U
2,4,6-Trichlorophenol	400 U	390 U	410 U	410 U	400 U	370 U	380 U	400 U	400 U	410 U	390 U	380 U	380 U	390 U	400 U
2,4-Dichlorophenol	400 U	390 U	410 U	410 U	400 U	370 U	380 U	400 U	400 U	410 U	390 U	380 U	380 U	390 U	400 U
2,4-Dimethylphenol	400 U	390 U	410 U	410 U	400 U	370 U	380 U	400 U	400 U	410 U	390 U	380 U	380 U	390 U	400 U
2,4-Dinitrophenol	1,000 UJ	980 UJ	1,000 R	1,000 R	1,000 R	930 UJ	940 UJ	1,000 UJ	1,000 UJ	1,000 R	970 R	940 R	950 R	970 R	1,000 UJ
2,4-Dinitrotoluene	400 U	390 U	410 U	410 U	400 U	370 U	380 U	400 U	400 U	410 U	390 U	380 U	380 U	390 U	400 U
2,6-Dinitrotoluene	400 U	390 U	410 U	410 U	400 U	370 U	380 U	400 U	400 U	410 U	390 U	380 U	380 U	390 U	400 U
2-Chloronaphthalene	400 U	390 U	410 U	410 U	400 U	370 U	380 U	400 U	400 U	410 U	390 U	380 U	380 U	390 U	400 U
2-Chlorophenol	400 U	390 U	410 U	410 U	400 U	370 U	380 U	400 U	400 U	410 U	390 U	380 U	380 U	390 U	400 U
2-Methylnaphthalene	400 U	390 U	410 U	410 U	400 U	370 U	380 U	400 U	400 U	410 U	390 U	380 U	380 U	390 U	400 U
2-Methylphenol	400 U	390 U	410 U	410 U	400 U	370 U	380 U	400 U	400 U	410 U	390 U	380 U	380 U	390 U	400 U
2-Nitroaniline	1,000 U	980 U	1,000 U	1,000 U	1,000 U	930 U	940 U	1,000 U	1,000 U	1,000 U	970 U	940 U	950 U	970 U	1,000 U
2-Nitrophenol	400 U	390 U	410 U	410 U	400 U	370 U	380 U	400 U	400 U	410 U	390 U	380 U	380 U	390 U	400 U
3,3'-Dichlorobenzidine	400 UJ	390 UJ	410 UJ	410 UJ	400 U	370 UJ	380 UJ	400 UJ	400 UJ	410 U	390 UJ	380 UJ	380 U	390 UJ	400 UJ
3-Nitroaniline	1,000 U	980 U	1,000 U	1,000 U	1,000 U	930 U	940 U	1,000 U	1,000 U	1,000 U	970 U	940 U	950 U	970 U	1,000 U
4,6-Dinitro-2-methylphenol	1,000 U	980 U	1,000 UJ	1,000 UJ	1,000 UJ	930 U	940 U	1,000 U	1,000 U	1,000 UJ	970 UJ	940 UJ	950 UJ	970 UJ	1,000 U
4-Bromophenyl-phenylether	400 U	390 U	410 U	410 U	400 U	370 U	380 U	400 U	400 U	410 U	390 U	380 U	380 U	390 U	400 U
4-Chloro-3-methylphenol	400 U	390 U	410 U	410 U	400 U	370 U	380 U	400 U	400 U	410 U	390 U	380 U	380 U	390 U	400 U
4-Chloroaniline	400 UJ	390 UJ	410 UJ	410 UJ	400 UJ	370 UJ	380 UJ	400 UJ	400 UJ	410 U	390 U	380 U	380 U	390 U	400 U
4-Chlorophenyl-phenylether	400 U	390 U	410 U	410 U	400 U	370 U	380 U	400 U	400 U	410 U	390 U	380 U	380 U	390 U	400 U
4-Methylphenol	400 U	390 U	410 U	410 U	400 U	370 U	380 U	400 U	400 U	410 U	390 U	380 U	380 U	390 U	400 U
4-Nitroaniline	1,000 UJ	980 UJ	1,000 UJ	1,000 UJ	1,000 UJ	930 UJ	940 UJ	1,000 UJ	1,000 UJ	1,000 U	970 UJ	940 UJ	950 U	970 UJ	1,000 UJ
4-Nitrophenol	1,000 UJ	980 UJ	1,000 UJ	1,000 UJ	1,000 UJ	930 UJ	940 UJ	1,000 UJ	1,000 UJ	1,000 U	970 UJ	940 UJ	950 U	970 UJ	1,000 U
Acenaphthene	400 U	390 U	410 U	410 U	400 U	370 U	380 U	400 U	400 U	410 U	390 U	380 U	380 U	390 U	400 U
Acenaphthylene	400 U	390 U	410 U	410 U	400 U	370 U	380 U	400 U	400 U	410 U	390 U	380 U	380 U	390 U	400 U
Acetophenone	400 U	390 U	410 U	410 U	400 U	370 U	380 U	400 U	400 U	410 U	390 U	380 U	380 U	390 U	400 U
Anthracene	400 U	390 U	410 U	410 U	400 U	370 U	380 U	400 U	400 U	410 U	390 U	380 U	380 U	390 U	400 U
Atrazine	400 UJ	390 UJ	410 U	410 U	400 U	370 UJ	380 UJ	400 UJ	400 UJ	410 U	390 U	380 U	380 U	390 U	400 U
Benzaldehyde	400 U	390 U	410 U	410 U	400 U	370 U	380 U	400 U	400 U	410 U	390 U	380 U	380 U	390 U	400 U
Benzo(a)anthracene	400 U	390 U	410 U	410 U	400 U	370 U	380 U	400 U	400 U	410 U	390 U	380 U	380 U	390 U	400 U
Benzo(a)pyrene	400 U	390 U	410 U	410 U	400 U	370 U	380 U	400 U	400 U	410 U	390 U	380 U	380 U	390 U	400 U
Benzo(b)fluoranthene	400 U	390 U	410 U	410 U	400 U	370 U	380 U	400 U	400 U	410 U	390 U	380 U	380 U	390 U	400 U
Benzo(g,h,i)perylene	400 U	390 U	410 U	410 U	400 U	370 U	380 U	400 U	400 U	410 U	390 U	380 U	380 U	390 U	400 U
Benzo(k)fluoranthene	400 U	390 U	410 U	410 U	400 U	370 U	380 U	400 U	400 U	410 U	390 U	380 U	380 U	390 U	400 U
Butylbenzylphthalate	400 U	390 U	410 U	410 U	400 U	370 U	380 U	400 U	400 U	410 U	390 U	380 U	380 U	390 U	400 U
Caprolactam	400 U	390 U	410 U	410 U	400 U	370 U	380 U	400 U	400 U	410 U	390 U	380 U	380 U	390 U	400 U
Carbazole	400 U	390 U	410 U	410 U	400 U	370 U	380 U	400 U	400 U	410 U	390 U	380 U	380 U	390 U	400 U
Chrysene	400 U	390 U	410 U	410 U	400 U	370 U	380 U	400 U	400 U	410 U	390 U	380 U	380 U	390 U	400 U
Di-n-butylphthalate	400 U	390 U	410 U	410 U	400 U	370 U	380 U	400 U	400 U	410 U	390 U	380 U	380 U	390 U	400 U
Di-n-octylphthalate	400 U	390 U	410 U	410 U	400 U	370 U	380 U	400 U	400 U	410 U	390 U	380 U	380 U	390 U	400 U
Dibenz(a,h)anthracene	400 U	390 U	410 U	410 U	400 U	370 U	380 U	400 U	400 U	410 U	390 U	380 U	380 U	390 U	400 U
Dibenzofuran	400 U	390 U	410 U	410 U	400 U	370 U	380 U	400 U	400 U	410 U	390 U	380 U	380 U	390 U	400 U
Diethylphthalate	400 U	390 U	410 U	410 U	400 U	370 U	380 U	400 U	400 U	410 U	390 U	380 U	380 U	390 U	400 U
Dimethyl phthalate	400 U	390 U	410 U	410 U	400 U	370 U	380 U	400 U	400 U	410 U	390 U	380 U	380 U	390 U	400 U
Fluoranthene	400 U	390 U	410 U	410 U	400 U	370 U	380 U	400 U	400 U	410 U	390 U	380 U	380 U	390 U	400 U
Fluorene	400 U	390 U	410 U	410 U	400 U	370 U	380 U	400 U	400 U	410 U	390 U	380 U	380 U	390 U	400 U
Hexachlorobenzene	400 U	390 U	410 U	410 U	400 U	370 U	380 U	400 U	400 U	410 U	390 U	380 U	380 U	390 U	400 U
Hexachlorobutadiene	400 U	390 U	410 U	410 U	400 U	370 U	380 U	400 U	400 U	410 U	390 U	380 U	380 U	390 U	400 U
Hexachlorocyclopentadiene	400 UJ	390 UJ	410 R	410 R	400 R	370 UJ	380 UJ	400 UJ	400 UJ	410 U	390 R	380 R	380 U	390 R	400 UJ
Hexachloroethane	400 U	390 U	410 U	410 U	400 U	370 U	380 U	400 U	400 U	410 U	390 U	380 U	380 U	390 U	400 U
Indeno(1,2,3-cd)pyrene	400 U	390 U	410 U	410 U	400 U	370 U	380 U	400 U	400 U	410 U	390 U	380 U	380 U	390 U	400 U
Isophorone	400 U	390 U	410 U	410 U	400 U	370 U	380 U	400 U	400 U	410 U	390 U	380 U	380 U	390 U	400 U
Naphthalene	400 U	390 U	410 U	410 U	400 U	370 U	380 U	400 U	400 U	410 U	390 U	380 U	380 U	390 U	400 U
Nitrobenzene	400 U	390 U	410 U	410 U	400 U	370 U	380 U	400 U	400 U	410 U	390 U	380 U	380 U	390 U	400 U
Pentachlorophenol	1,000 U	980 U	1,000 U	1,000 U	1,000 U	930 U	940 U	1,000 U	1,000 U	1,000 U	970 U	940 U	950 U	970 U	1,000 U
Phenanthrene	400 U	390 U	410 U	410 U	400 U	370 U	380 U	400 U	400 U	410 U	390 U	380 U	380 U	390 U	400 U
Phenol	400 U	390 U	410 U	410 U	400 U	370 U	380 U	400 U	400 U	410 U	390 U	380 U	380 U	390 U	400 U
Pyrene	400 U	390 U	410 U	410 U	400 U	370 U	380 U	400 U	400 U	410 U	390 U	380 U	380 U	390 U	400 U
bis(2-Chloroethoxy)methane	400 U	390 U	410 U	410 U	400 U	370 U	380 U	400 U	400 U	410 U	390 U	380 U	380 U	390 U	400 U
bis(2-Chloroethyl)ether	400 U	390 U	410 U	410 U	400 U	370 U	380 U	400 U	400 U	410 U	390 U	380 U	380 U	390 U	400 U
bis(2-Ethylhexyl)phthalate	52 J	79 J	98 J	74 J	58 J	490	53 J	68 J	59 J	69 U	48 U	59 U	58 U	72 U	210 U
n-Nitroso-di-n-propylamine	400 U	390 U	410 U	410 U	400 U	370 U	380 U	400 U	400 U	410 U	390 U	380 U	380 U	390 U	400 UJ
n-Nitrosodiphenylamine	400 U	390 U	410 U	410 U	400 U	370 U	380 U	400 U	400 U	410 U	390 U	380 U	380 U	390 U	400 U

Site 95
Surface Soil Raw Analytical Data
October 2006

Station ID	IR95B-IS114		IR95B-IS115			IR95B-IS116		IR95B-IS117	IR95B-IS118	IR95B-IS119	IR95B-IS120	IR95B-IS121	IR95B-IS122	IR95B-IS123	IR95B-IS124
Sample ID	IR95B-IS114-0-1-06D-1	IR95B-IS114-0-1-06D-2	IR95B-IS115-0-1-06D-1	IR95B-IS115-0-1-06D-2	IR95B-IS115D-0-1-06D-2	IR95B-IS116-0-1-06D-1	IR95B-IS116-0-1-06D-2	IR95B-IS117-0-1-06D-2	IR95B-IS118-0-1-06D-2	IR95B-IS119-0-1-06D-2	IR95B-IS120-0-1-06D-2	IR95B-IS121-0-1-06D-2	IR95B-IS122-0-1-06D-2	IR95B-IS123-0-1-06D-2	IR95B-IS124-0-1-06D-2
Sample Date	10/03/06	10/05/06	10/03/06	10/05/06	10/05/06	10/03/06	10/05/06	10/05/06	10/05/06	10/05/06	10/05/06	10/05/06	10/05/06	10/05/06	10/05/06
Chemical Name															
Semi-volatile Organic Compounds (UG/KG)															
1,1-Biphenyl	NA	380 U	NA	360 U	360 U	NA	360 U	370 U	380 U	360 U	400 U	400 U	390 U	390 U	410 U
2,2'-Oxybis(1-chloropropane)	NA	380 U	NA	360 U	360 U	NA	360 U	370 U	380 U	360 U	400 U	400 U	390 U	390 U	410 U
2,4,5-Trichlorophenol	NA	940 U	NA	920 U	900 U	NA	920 U	930 U	950 U	910 U	1,000 U	1,000 U	990 U	990 U	1,000 U
2,4,6-Trichlorophenol	NA	380 U	NA	360 U	360 U	NA	360 U	370 U	380 U	360 U	400 U	400 U	390 U	390 U	410 U
2,4-Dichlorophenol	NA	380 U	NA	360 U	360 U	NA	360 U	370 U	380 U	360 U	400 U	400 U	390 U	390 U	410 U
2,4-Dimethylphenol	NA	380 U	NA	360 U	360 U	NA	360 U	370 U	380 U	360 U	400 U	400 U	390 U	390 U	410 U
2,4-Dinitrophenol	NA	940 R	NA	920 R	900 R	NA	920 R	930 UJ	950 R	910 R	1,000 R	1,000 R	990 R	990 UJ	1,000 UJ
2,4-Dinitrotoluene	NA	380 U	NA	360 U	360 U	NA	360 U	370 U	380 U	360 U	400 U	400 U	390 U	390 U	410 U
2,6-Dinitrotoluene	NA	380 U	NA	360 U	360 U	NA	360 U	370 U	380 U	360 U	400 U	400 U	390 U	390 U	410 U
2-Chloronaphthalene	NA	380 U	NA	360 U	360 U	NA	360 U	370 U	380 U	360 U	400 U	400 U	390 U	390 U	410 U
2-Chlorophenol	NA	380 U	NA	360 U	360 U	NA	360 U	370 U	380 U	360 U	400 U	400 U	390 U	390 U	410 U
2-Methylnaphthalene	NA	380 U	NA	360 U	360 U	NA	360 U	370 U	380 U	360 U	400 U	400 U	390 U	390 U	410 U
2-Methylphenol	NA	380 U	NA	360 U	360 U	NA	360 U	370 U	380 U	360 U	400 U	400 U	390 U	390 U	410 U
2-Nitroaniline	NA	940 U	NA	920 U	900 U	NA	920 U	930 U	950 U	910 U	1,000 U	1,000 U	990 U	990 U	1,000 U
2-Nitrophenol	NA	380 U	NA	360 U	360 U	NA	360 U	370 U	380 U	360 U	400 U	400 U	390 U	390 U	410 U
3,3'-Dichlorobenzidine	NA	380 U	NA	360 U	360 UJ	NA	360 U	370 UJ	380 U	360 U	400 U	400 U	390 U	390 U	410 U
3-Nitroaniline	NA	940 U	NA	920 U	900 U	NA	920 U	930 U	950 U	910 U	1,000 U	1,000 U	990 U	990 U	1,000 U
4,6-Dinitro-2-methylphenol	NA	940 U	NA	920 U	900 UJ	NA	920 U	930 U	950 UJ	910 UJ	1,000 U	1,000 U	990 U	990 U	1,000 U
4-Bromophenyl-phenylether	NA	380 U	NA	360 U	360 U	NA	360 U	370 U	380 U	360 U	400 U	400 U	390 U	390 U	410 U
4-Chloro-3-methylphenol	NA	380 U	NA	360 U	360 U	NA	360 U	370 U	380 U	360 U	400 U	400 U	390 U	390 U	410 U
4-Chloroaniline	NA	380 U	NA	360 U	360 U	NA	360 U	370 U	380 U	360 U	400 U	400 U	390 U	390 U	410 U
4-Chlorophenyl-phenylether	NA	380 U	NA	360 U	360 U	NA	360 U	370 U	380 U	360 U	400 U	400 U	390 U	390 U	410 U
4-Methylphenol	NA	380 U	NA	360 U	360 U	NA	360 U	370 U	380 U	360 U	400 U	400 U	390 U	390 U	410 U
4-Nitroaniline	NA	940 U	NA	920 U	900 UJ	NA	920 U	930 U	950 U	910 U	1,000 U	1,000 U	990 U	990 UJ	1,000 UJ
4-Nitrophenol	NA	940 U	NA	920 U	900 UJ	NA	920 U	930 UJ	950 U	910 U	1,000 U	1,000 U	990 U	990 U	1,000 U
Acenaphthene	NA	380 U	NA	360 U	360 U	NA	360 U	370 U	380 U	360 U	400 U	400 U	390 U	390 U	410 U
Acenaphthylene	NA	380 U	NA	360 U	360 U	NA	360 U	370 U	380 U	360 U	400 U	400 U	390 U	390 U	410 U
Acetophenone	NA	380 U	NA	360 U	360 U	NA	360 U	370 U	380 U	360 U	400 U	400 U	390 U	390 U	410 U
Anthracene	NA	380 U	NA	360 U	360 U	NA	360 U	370 U	380 U	360 U	400 U	400 U	390 U	390 U	410 U
Atrazine	NA	380 U	NA	360 U	360 U	NA	360 U	370 UJ	380 U	360 U	400 U	400 U	390 U	390 U	410 U
Benzaldehyde	NA	380 UJ	NA	360 UJ	360 U	NA	37 J	370 U	380 U	360 U	110 J	82 J	92 J	390 UJ	410 UJ
Benzo(a)anthracene	NA	380 U	NA	360 U	360 U	NA	360 U	370 U	380 U	360 U	400 U	400 U	390 U	390 U	410 U
Benzo(a)pyrene	NA	380 U	NA	360 U	360 U	NA	360 U	370 U	380 U	360 U	400 U	400 U	390 U	390 U	410 U
Benzo(b)fluoranthene	NA	380 U	NA	360 U	360 U	NA	360 U	370 U	380 U	360 U	400 U	400 U	390 U	390 U	410 U
Benzo(g,h,i)perylene	NA	380 U	NA	360 U	360 U	NA	360 U	370 U	380 U	360 U	400 U	400 U	390 U	390 U	410 U
Benzo(k)fluoranthene	NA	380 U	NA	360 U	360 U	NA	360 U	370 U	380 U	360 U	400 U	400 U	390 U	390 U	410 U
Butylbenzylphthalate	NA	380 U	NA	360 U	360 U	NA	360 U	370 U	380 U	360 U	400 U	400 U	390 U	390 U	410 U
Caprolactam	NA	380 U	NA	360 U	360 U	NA	360 U	370 U	380 U	360 U	400 U	400 U	390 U	390 U	410 U
Carbazole	NA	380 U	NA	360 U	360 U	NA	360 U	370 U	380 U	360 U	400 U	400 U	390 U	390 U	410 U
Chrysene	NA	380 U	NA	360 U	360 U	NA	360 U	370 U	380 U	360 U	400 U	400 U	390 U	390 U	410 U
Di-n-butylphthalate	NA	65 J	NA	67 J	40 J	NA	71 J	82 J	47 J	38 J	80 J	65 J	61 J	390 U	410 U
Di-n-octylphthalate	NA	380 U	NA	360 U	360 U	NA	360 U	370 U	380 U	360 U	400 U	400 U	390 U	390 U	410 U
Dibenz(a,h)anthracene	NA	380 U	NA	360 U	360 U	NA	360 U	370 U	380 U	360 U	400 U	400 U	390 U	390 U	410 U
Dibenzofuran	NA	380 U	NA	360 U	360 U	NA	360 U	370 U	380 U	360 U	400 U	400 U	390 U	390 U	410 U
Diethylphthalate	NA	380 U	NA	360 U	360 U	NA	360 U	370 U	380 U	360 U	400 U	400 U	390 U	390 U	410 U
Dimethyl phthalate	NA	380 U	NA	360 U	360 U	NA	360 U	370 U	380 U	360 U	400 U	400 U	390 U	390 U	410 U
Fluoranthene	NA	380 U	NA	360 U	360 U	NA	360 U	370 U	380 U	360 U	400 U	400 U	390 U	390 U	410 U
Fluorene	NA	380 U	NA	360 U	360 U	NA	360 U	370 U	380 U	360 U	400 U	400 U	390 U	390 U	410 U
Hexachlorobenzene	NA	380 U	NA	360 U	360 U	NA	360 U	370 U	380 U	360 U	400 U	400 U	390 U	390 U	410 U
Hexachlorobutadiene	NA	380 U	NA	360 U	360 U	NA	360 U	370 U	380 U	360 U	400 U	400 U	390 U	390 U	410 U
Hexachlorocyclopentadiene	NA	380 U	NA	360 U	360 R	NA	360 U	370 UJ	380 U	360 U	400 U	400 U	390 U	390 UJ	410 UJ
Hexachloroethane	NA	380 U	NA	360 U	360 U	NA	360 U	370 U	380 U	360 U	400 U	400 U	390 U	390 U	410 U
Indeno(1,2,3-cd)pyrene	NA	380 U	NA	360 U	360 U	NA	360 U	370 U	380 U	360 U	400 U	400 U	390 U	390 U	410 U
Isophorone	NA	380 U	NA	360 U	360 U	NA	360 U	370 U	380 U	360 U	400 U	400 U	390 U	390 U	410 U
Naphthalene	NA	380 U	NA	360 U	360 U	NA	360 U	370 U	380 U	360 U	400 U	400 U	390 U	390 U	410 U
Nitrobenzene	NA	380 U	NA	360 U	360 U	NA	360 U	370 U	380 U	360 U	400 U	400 U	390 U	390 U	410 U
Pentachlorophenol	NA	940 U	NA	920 U	900 U	NA	920 U	930 U	950 U	910 U	1,000 U	1,000 U	990 U	990 U	1,000 U
Phenanthrene	NA	380 U	NA	360 U	360 U	NA	360 U	370 U	380 U	360 U	400 U	400 U	390 U	390 U	410 U
Phenol	NA	380 U	NA	360 U	360 U	NA	360 U	370 U	380 U	360 U	400 U	400 U	390 U	390 U	410 U
Pyrene	NA	380 U	NA	360 U	360 U	NA	360 U	370 U	380 U	360 U	400 U	400 U	390 U	390 U	410 U
bis(2-Chloroethoxy)methane	NA	380 U	NA	360 U	360 U	NA	360 U	370 U	380 U	360 U	400 U	400 U	390 U	390 U	410 U
bis(2-Chloroethyl)ether	NA	380 U	NA	360 U	360 U	NA	360 U	370 U	380 U	360 U	400 U	400 U	390 U	390 U	410 U
bis(2-Ethylhexyl)phthalate	NA	120 U	NA	110 U	310 J	NA	570 U	190 U	190 U	120 U	370 U	100 U	110 U	190 U	250 U
n-Nitroso-di-n-propylamine	NA	380 U	NA	360 U	360 U	NA	360 U	370 U	380 U	360 U	400 U	400 U	390 U	390 UJ	410 UJ
n-Nitrosodiphenylamine	NA	380 U	NA	360 U	360 U	NA	360 U	370 U	380 U	360 U	400 U	400 U	390 U	390 U	410 U

Site 95
Surface Soil Raw Analytical Data
October 2006

Station ID	IR95B-IS125		IR95B-IS126	IR95B-IS127	IR95B-IS128	IR95B-IS129	IR95B-IS130
Sample ID	IR95B-IS125-0-1-06D-2	IR95B-IS125D-0-1-06D-2	IR95B-IS126-0-1-06D-2	IR95B-IS127-0-1-06D-2	IR95B-IS128-0-1-06D-2	IR95B-IS129-0-1-06D-2	IR95B-IS130-0-1-06D-2
Sample Date	10/05/06	10/05/06	10/05/06	10/05/06	10/05/06	10/05/06	10/05/06
Chemical Name							
Semi-volatile Organic Compounds (UG/KG)							
1,1-Biphenyl	390 U	390 U	370 U	410 U	390 U	390 U	390 U
2,2'-Oxybis(1-chloropropane)	390 U	390 U	370 U	410 U	390 U	390 U	390 U
2,4,5-Trichlorophenol	980 U	980 U	940 U	1,000 U	970 U	980 U	980 U
2,4,6-Trichlorophenol	390 U	390 U	370 U	410 U	390 U	390 U	390 U
2,4-Dichlorophenol	390 U	390 U	370 U	410 U	390 U	390 U	390 U
2,4-Dimethylphenol	390 U	390 U	370 U	410 U	390 U	390 U	390 U
2,4-Dinitrophenol	980 UJ	980 UJ	940 R	1,000 R	970 R	980 R	980 R
2,4-Dinitrotoluene	390 U	390 U	370 U	410 U	390 U	390 U	390 U
2,6-Dinitrotoluene	390 U	390 U	370 U	410 U	390 U	390 U	390 U
2-Chloronaphthalene	390 U	390 U	370 U	410 U	390 U	390 U	390 U
2-Chlorophenol	390 U	390 U	370 U	410 U	390 U	390 U	390 U
2-Methylnaphthalene	390 U	390 U	370 U	410 U	390 U	390 U	390 U
2-Methylphenol	390 U	390 U	370 U	410 U	390 U	390 U	390 U
2-Nitroaniline	980 U	980 U	940 U	1,000 U	970 U	980 U	980 U
2-Nitrophenol	390 U	390 U	370 U	410 U	390 U	390 U	390 U
3,3'-Dichlorobenzidine	390 U	390 U	370 UJ	410 U	390 UJ	390 UJ	390 UJ
3-Nitroaniline	980 U	980 U	940 U	1,000 U	970 U	980 U	980 U
4,6-Dinitro-2-methylphenol	980 U	980 U	940 UJ	1,000 UJ	970 UJ	980 UJ	980 UJ
4-Bromophenyl-phenylether	390 U	390 U	370 U	410 U	390 U	390 U	390 U
4-Chloro-3-methylphenol	390 U	390 U	370 U	410 U	390 U	390 U	390 U
4-Chloroaniline	390 U	390 U	370 U	410 U	390 U	390 U	390 U
4-Chlorophenyl-phenylether	390 U	390 U	370 U	410 U	390 U	390 U	390 U
4-Methylphenol	390 U	390 U	370 U	410 U	390 U	390 U	390 U
4-Nitroaniline	980 UJ	980 UJ	940 UJ	1,000 U	970 UJ	980 UJ	980 UJ
4-Nitrophenol	980 U	980 U	940 UJ	1,000 U	970 UJ	980 UJ	980 UJ
Acenaphthene	390 U	390 U	370 U	410 U	390 U	390 U	390 U
Acenaphthylene	390 U	390 U	370 U	410 U	390 U	390 U	390 U
Acetophenone	390 U	390 U	370 U	410 U	390 U	390 U	390 U
Anthracene	390 U	390 U	370 U	410 U	390 U	390 U	390 U
Atrazine	390 U	390 U	370 U	410 U	390 U	390 U	390 U
Benzaldehyde	390 UJ	390 UJ	43 J	410 U	39 J	390 U	63 J
Benzo(a)anthracene	390 U	390 U	370 U	410 U	390 U	390 U	390 U
Benzo(a)pyrene	40 J	43 J	370 U	410 U	390 U	390 U	390 U
Benzo(b)fluoranthene	81 J	77 J	370 U	410 U	390 U	390 U	390 U
Benzo(g,h,i)perylene	390 U	390 U	370 U	410 U	390 U	390 U	390 U
Benzo(k)fluoranthene	390 U	390 U	370 U	410 U	390 U	390 U	390 U
Butylbenzylphthalate	390 U	390 U	370 U	410 U	390 U	390 U	390 U
Caprolactam	390 U	390 U	370 U	410 U	390 U	390 U	390 U
Carbazole	390 U	390 U	370 U	410 U	390 U	390 U	390 U
Chrysene	390 U	39 J	370 U	410 U	390 U	390 U	390 U
Di-n-butylphthalate	390 U	390 U	370 U	410 U	390 U	390 U	390 U
Di-n-octylphthalate	390 U	390 U	370 U	410 U	390 U	390 U	390 U
Dibenz(a,h)anthracene	390 U	390 U	370 U	410 U	390 U	390 U	390 U
Dibenzofuran	390 U	390 U	370 U	410 U	390 U	390 U	390 U
Diethylphthalate	390 U	390 U	370 U	410 U	390 U	390 U	390 U
Dimethyl phthalate	390 U	390 U	370 U	410 U	390 U	390 U	390 U
Fluoranthene	390 U	40 J	370 U	410 U	390 U	390 U	390 U
Fluorene	390 U	390 U	370 U	410 U	390 U	390 U	390 U
Hexachlorobenzene	390 U	390 U	370 U	410 U	390 U	390 U	390 U
Hexachlorobutadiene	390 U	390 U	370 U	410 U	390 U	390 U	390 U
Hexachlorocyclopentadiene	390 UJ	390 UJ	370 R	410 U	390 R	390 R	390 R
Hexachloroethane	390 U	390 U	370 U	410 U	390 U	390 U	390 U
Indeno(1,2,3-cd)pyrene	390 U	390 U	370 U	410 U	390 U	390 U	390 U
Isophorone	390 U	390 U	370 U	410 U	390 U	390 U	390 U
Naphthalene	390 U	390 U	370 U	410 U	390 U	390 U	390 U
Nitrobenzene	390 U	390 U	370 U	410 U	390 U	390 U	390 U
Pentachlorophenol	980 U	980 U	940 U	1,000 U	970 U	980 U	980 U
Phenanthrene	390 U	390 U	370 U	410 U	390 U	390 U	390 U
Phenol	390 U	390 U	370 U	410 U	390 U	390 U	390 U
Pyrene	390 U	43 J	370 U	410 U	390 U	390 U	390 U
bis(2-Chloroethoxy)methane	390 U	390 U	370 U	410 U	390 U	390 U	390 U
bis(2-Chloroethyl)ether	390 U	390 U	370 U	410 U	390 U	390 U	390 U
bis(2-Ethylhexyl)phthalate	78 U	85 U	65 U	64 U	43 U	90 U	63 U
n-Nitroso-di-n-propylamine	390 UJ	390 UJ	370 U	410 U	390 U	390 U	390 U
n-Nitrosodiphenylamine	390 U	390 U	370 U	410 U	390 U	390 U	390 U

Site 95
Surface Soil Raw Analytical Data
October 2006

Station ID	IR95B-IS100	IR95B-IS101	IR95B-IS102	IR95B-IS103	IR95B-IS104	IR95B-IS105	IR95B-IS106	IR95B-IS107		IR95B-IS108	IR95B-IS109	IR95B-IS110	IR95B-IS111	IR95B-IS112	IR95B-IS113
Sample ID	IR95B-IS100-0-1-06D-2	IR95B-IS101-0-1-06D-2	IR95B-IS102-0-1-06D-2	IR95B-IS103-0-1-06D-2	IR95B-IS104-0-1-06D-2	IR95B-IS105-0-1-06D-2	IR95B-IS106-0-1-06D-2	IR95B-IS107-0-1-06D-2	IR95B-IS107D-0-1-06D-2	IR95B-IS108-0-1-06D-2	IR95B-IS109-0-1-06D-2	IR95B-IS110-0-1-06D-2	IR95B-IS111-0-1-06D-2	IR95B-IS112-0-1-06D-2	IR95B-IS113-0-1-06D-2
Sample Date	10/05/06	10/05/06	10/05/06	10/05/06	10/05/06	10/05/06	10/05/06	10/05/06	10/05/06	10/05/06	10/05/06	10/05/06	10/05/06	10/05/06	10/05/06
Chemical Name															
Pesticide/Polychlorinated Biphenyls (UG/KG)															
4,4'-DDD	4 U	3.9 U	4.1 U	4.1 U	4 U	3.7 U	3.7 U	4 U	3.9 U	4.1 U	3.8 U	3.7 U	3.8 U	3.9 U	4 U
4,4'-DDE	4 U	3.9 U	4.1 U	4.1 U	4 U	3.7 U	3.7 U	4 U	3.9 U	4.1 U	3.8 U	3.7 U	3.8 U	3.9 U	4 U
4,4'-DDT	4 U	3.9 U	4.1 U	4.1 U	4 U	3.7 U	3.7 U	4 U	3.9 U	4.1 U	3.8 U	3.7 U	3.8 U	3.9 U	4 U
Aldrin	2 U	2 U	2.1 U	2.1 U	2.1 U	1.9 U	1.9 U	2 U	2 U	2.1 U	2 U	1.9 U	1.9 U	2 U	2 U
Aroclor-1016	40 U	39 U	41 U	41 U	40 U	37 U	37 U	40 U	39 U	41 U	38 U	37 U	38 U	39 U	40 U
Aroclor-1221	80 U	79 U	83 U	84 U	82 U	75 U	75 U	81 U	80 U	84 U	78 U	76 U	77 U	78 U	80 U
Aroclor-1232	40 U	39 U	41 U	41 U	40 U	37 U	37 U	40 U	39 U	41 U	38 U	37 U	38 U	39 U	40 U
Aroclor-1242	40 U	39 U	41 U	41 U	40 U	37 U	37 U	40 U	39 U	41 U	38 U	37 U	38 U	39 U	40 U
Aroclor-1248	40 U	39 U	41 U	41 U	40 U	37 U	37 U	40 U	39 U	41 U	38 U	37 U	38 U	39 U	40 U
Aroclor-1254	40 U	39 U	41 U	41 U	40 U	37 U	37 U	40 U	39 U	41 U	38 U	37 U	38 U	39 U	40 U
Aroclor-1260	40 U	39 U	41 U	41 U	40 U	37 U	37 U	40 U	39 U	41 U	38 U	37 U	38 U	39 U	40 U
Dieldrin	4 U	3.9 U	4.1 U	4.1 U	4 U	3.7 U	3.7 U	4 U	3.9 U	4.1 U	3.8 U	3.7 U	3.8 U	3.9 U	4 U
Endosulfan I	2 U	2 U	2.1 U	2.1 U	2.1 U	1.9 U	1.9 U	2 U	2 U	2.1 U	2 U	1.9 U	1.9 U	2 U	2 U
Endosulfan II	4 U	3.9 U	4.1 U	4.1 U	4 U	3.7 U	3.7 U	4 U	3.9 U	4.1 U	3.8 U	3.7 U	3.8 U	3.9 U	4 U
Endosulfan sulfate	4 U	3.9 U	4.1 U	4.1 U	4 U	3.7 U	3.7 U	4 U	3.9 U	4.1 U	3.8 U	3.7 U	3.8 U	3.9 U	4 U
Endrin	4 U	3.9 U	4.1 U	4.1 U	4 U	3.7 U	3.7 U	4 U	3.9 U	4.1 U	3.8 U	2.4 J	3.8 U	3.9 U	4 U
Endrin aldehyde	4 U	3.9 U	4.1 U	4.1 U	4 U	3.7 U	3.7 U	4 U	3.9 U	4.1 U	3.8 U	3.7 U	3.8 U	3.9 U	4 U
Endrin ketone	4 U	3.9 U	4.1 U	4.1 U	4 U	3.7 U	3.7 U	4 U	3.9 U	4.1 U	3.8 U	3.7 U	3.8 U	3.9 U	4 U
Heptachlor	2 U	2 U	2.1 U	2.1 U	2.1 U	1.9 U	1.9 U	2 U	2 U	2.1 U	2 U	1.9 U	1.9 U	2 U	2 U
Heptachlor epoxide	2 U	2 U	2.1 U	2.1 U	2.1 U	1.9 U	1.9 U	2 U	2 U	2.1 U	2 U	1.9 U	1.9 U	2 U	2 U
Methoxychlor	20 U	20 U	21 U	21 U	21 U	19 U	19 U	20 U	20 U	21 U	20 U	19 U	19 U	20 U	20 U
Toxaphene	200 U	200 U	210 U	210 U	210 U	190 U	190 U	200 U	200 U	210 U	200 U	190 U	190 U	200 U	200 U
alpha-BHC	2 U	2 U	2.1 U	2.1 U	2.1 U	1.9 U	1.9 U	2 U	2 U	2.1 U	2 U	1.9 U	1.9 U	2 U	2 U
alpha-Chlordane	2 U	2 U	2.1 U	2.1 U	2.1 U	1.9 U	1.9 U	2 U	2 U	2.1 U	2 U	1.9 U	1.9 U	2 U	2 U
beta-BHC	2 U	2 U	2.1 U	2.1 U	2.1 U	1.9 U	1.9 U	2 U	2 U	2.1 U	2 U	1.9 U	1.9 U	2 U	2 U
delta-BHC	2 U	2 U	2.1 U	2.1 U	2.1 U	1.9 U	1.9 U	2 U	2 U	2.1 U	2 U	1.9 U	1.9 U	2 U	2 U
gamma-BHC (Lindane)	2 U	2 U	2.1 U	2.1 U	2.1 U	1.9 U	1.9 U	2 U	2 U	2.1 U	2 U	1.9 U	1.9 U	2 U	2 U
gamma-Chlordane	2 U	2 U	2.1 U	2.1 U	2.1 U	1.9 U	1.9 U	2 U	2 U	2.1 U	2 U	1.9 U	1.9 U	2 U	2 U
Total Metals (MG/KG)															
Aluminum	6,160 J	13,000 J	4,400 J	4,410 J	4,290 J	4,550 J	3,840 J	3,520 J	3,430 J	3,950	3,670	2,780	2,450	2,920	3,770
Antimony	0.28 UJ	4.8 UJ	0.21 UJ	0.38 UJ	0.17 UJ	0.19 UJ	0.25 UJ	0.096 UJ	0.24 UJ	5.2 UJ	0.27 UJ	0.27 UJ	0.23 UJ	0.28 UJ	0.28 UJ
Arsenic	0.73 UJ	4 J-	0.92 J-	0.52 UJ	0.83 UJ	0.62 UJ	0.75 UJ	0.99 UJ	0.94 J-	2.5	6.7	8	0.62 U	0.57 U	1.1 U
Barium	26.6 J	23.4 J	15.6 J	12.3 J	21 J	21.4 J	10.7 J	11 J	12.8 J	20.5	14.4 J	10.9 J	7.7 J	9.8 J	17.5
Beryllium	0.09 J	0.14 J	0.084 J	0.063 J	0.071 J	0.065 J	0.054 J	0.051 J	0.047 J	0.064 J	0.05 J	0.038 U	0.035 U	0.04 U	0.067 J
Cadmium	0.015 UJ	0.4 UJ	0.018 UJ	0.036 UJ	0.08 UJ	0.39 UJ	0.41 UJ	0.45 UJ	0.016 UJ	0.007 U	0.025 U	0.41 U	0.4 U	0.0076 U	0.024 U
Calcium	901 J-	601 J-	734 J-	1,030 J-	933 J-	562 J-	2,160 J-	419 J-	719 J-	934	311 J	340 J	352 J	514	440
Chromium	4.6 J-	17.8 J	4.5 J-	4 UJ	4.1 J-	3.5 J-	3.3 UJ	2.8 J-	2.9 J-	4.4	2.8	2.5	2.3	2.5	4.2
Cobalt	0.21 U	0.52 J	0.15 U	0.16 U	0.27 U	0.19 U	0.21 U	0.12 U	0.14 U	0.25 J	0.12 U	0.13 U	0.1 U	0.13 U	0.15 U
Copper	4.9 U	5.5 U	4.1 U	97.3	5.9 U	12.7	4.5 U	4 U	4.3 U	6.1	3.5 U	3.4 U	18.2	3.5 U	4.3 U
Iron	1,670 J	6,690 J	1,270 J	1,150 J	1,440 J	986 J	1,060 J	1,000 J	1,030 J	4,990	993	686	569	677	1,190
Lead	24 J	11.4 J	11.4 J	10.3 J	22.4 J	9.8 J	4 J	7.4 J	8 J	21.1 J	8.3 J	4.5 J	3.6 J	4.6 J	11.2 J
Magnesium	230 J	656 J	158 J	157 J	198 J	180 J	186 J	144 J	163 J	210 J	139 J	123 J	104 J	116 J	150 J
Manganese	19.9 J	9.6 J	12.2 J	8.9 J	27.6 J	18.4 J	14.1 J	7.2 J	15 J	43.4 J	7.6 J	12.1 J	8 J	11.2 J	13 J
Mercury	0.041 J	0.11 U	0.028 J	0.027 J	0.043 J	0.098 U	0.099 U	0.027 J	0.025 J	0.059 J	0.044 J	0.094 U	0.018 J	0.1 U	0.063 J
Nickel	1.3 J	2.1 J	0.97 J	1.3 J	1.2 J	0.85 J	1.5 J	0.74 J	0.81 J	1.1 J	0.66 J	0.55 J	0.56 J	0.84 J	0.74 J
Potassium	229 J	658 J	161 J	150 J	212 J	168 J	148 J	134 J	143 J	210 J	168 J	139 J	100 J	129 J	141 J
Selenium	0.58 U	1.1 U	0.63 U	0.59 U	0.72 U	0.63 U	0.59 U	0.48 U	0.39 U	0.2 U	0.47 U	0.37 U	0.5 U	0.33 U	0.47 U
Silver	0.87 U	0.8 U	0.85 U	0.88 U	0.88 U	0.79 U	0.82 U	0.89 U	0.86 U	0.86 U	0.8 U	0.81 U	0.79 U	0.79 U	0.87 U
Sodium	29.7 U	38.8 U	44 U	88.8 U	36.8 U	29.8 U	31.8 U	35.9 U	29.5 U	28.3 U	22.9 U	26.2 U	19.7 U	25.2 U	26.4 U
Thallium	0.22 U	0.63 U	0.18 U	0.3 U	0.15 U	0.23 U	0.17 U	2.2 U	0.17 U	2.2 U	0.17 U	0.19 U	0.24 U	0.2 U	0.19 U
Vanadium	6 J	24.3 J	4.7 J	4.8 J	5.1 J	4.4 J	4.6 J	4.2 J	4.3 J	5.8	3.7 J	3.4 J	2.8 J	3.2 J	3.6 J
Zinc	24.9	21.1	9.3	957	33.9	12.2	9.5	9.7	13.7	26.9	9 U	6.3 U	25.9	6.1 U	10 U

Notes:
U- Analyte not detected
J- Reported value is estimated
J- - Reported value is biased low
UJ- Analyte not detected. Quantiation limit is imprecise
NA- Not analyzed
Shading represents detection

Site 95
Surface Soil Raw Analytical Data
October 2006

Station ID	IR95B-IS114		IR95B-IS115			IR95B-IS116		IR95B-IS117	IR95B-IS118	IR95B-IS119	IR95B-IS120	IR95B-IS121	IR95B-IS122	IR95B-IS123	IR95B-IS124
Sample ID	IR95B-IS114-0-1-06D-1	IR95B-IS114-0-1-06D-2	IR95B-IS115-0-1-06D-1	IR95B-IS115-0-1-06D-2	IR95B-IS115D-0-1-06D-2	IR95B-IS116-0-1-06D-1	IR95B-IS116-0-1-06D-2	IR95B-IS117-0-1-06D-2	IR95B-IS118-0-1-06D-2	IR95B-IS119-0-1-06D-2	IR95B-IS120-0-1-06D-2	IR95B-IS121-0-1-06D-2	IR95B-IS122-0-1-06D-2	IR95B-IS123-0-1-06D-2	IR95B-IS124-0-1-06D-2
Sample Date	10/03/06	10/05/06	10/03/06	10/05/06	10/05/06	10/03/06	10/05/06	10/05/06	10/05/06	10/05/06	10/05/06	10/05/06	10/05/06	10/05/06	10/05/06
Chemical Name															
Pesticide/Polychlorinated Biphenyls (UG/KG)															
4,4'-DDD	NA	3.8 U	NA	3.7 U	3.6 U	NA	3.7 U	3.7 U	3.8 U	3.6 U	3.9 U	4 U	4 U	4 U	4.1 U
4,4'-DDE	NA	3.8 U	NA	3.7 U	3.6 U	NA	3.7 U	3.7 U	3.8 U	3.6 U	3.9 U	4 U	4 U	4 U	4.1 U
4,4'-DDT	NA	3.8 U	NA	3.7 U	3.6 U	NA	3.7 U	3.7 U	3.8 U	3.6 U	3.9 U	4 U	4 U	4 U	4.1 U
Aldrin	NA	2 U	NA	1.9 U	1.8 U	NA	1.9 U	1.9 U	1.9 U	1.9 U	2 U	2.1 U	2.8 J	2 U	2.1 U
Aroclor-1016	NA	38 U	NA	37 U	36 U	NA	37 U	37 U	38 U	36 U	39 U	40 U	40 U	40 U	41 U
Aroclor-1221	NA	77 U	NA	74 U	73 U	NA	74 U	75 U	76 U	73 U	80 U	81 U	80 U	80 U	84 U
Aroclor-1232	NA	38 U	NA	37 U	36 U	NA	37 U	37 U	38 U	36 U	39 U	40 U	40 U	40 U	41 U
Aroclor-1242	NA	38 U	NA	37 U	36 U	NA	37 U	37 U	38 U	36 U	39 U	40 U	40 U	40 U	41 U
Aroclor-1248	NA	38 U	NA	37 U	36 U	NA	37 U	37 U	38 U	36 U	39 U	40 U	40 U	40 U	41 U
Aroclor-1254	NA	38 U	NA	37 U	36 U	NA	37 U	37 U	38 U	36 U	39 U	40 U	40 U	40 U	41 U
Aroclor-1260	NA	38 U	NA	37 U	36 U	NA	37 U	37 U	38 U	36 U	39 U	40 U	40 U	40 U	41 U
Dieldrin	NA	3.8 U	NA	3.7 U	3.6 U	NA	3.7 U	3.7 U	3.8 U	3.6 U	3.9 U	4 U	4 U	4 U	4.1 U
Endosulfan I	NA	2 U	NA	1.9 U	1.8 U	NA	1.9 U	1.9 U	1.9 U	1.9 U	2 U	2.1 U	2 U	2 U	2.1 U
Endosulfan II	NA	3.8 U	NA	3.7 U	3.6 U	NA	3.7 U	3.7 U	3.8 U	3.6 U	3.9 U	4 U	4 U	4 U	4.1 U
Endosulfan sulfate	NA	3.8 U	NA	3.7 U	3.6 U	NA	3.7 U	3.7 U	3.8 U	3.6 U	3.9 U	4 U	4 U	4 U	4.1 U
Endrin	NA	3.8 U	NA	3.7 U	3.6 U	NA	3.1 J	2.5 J	3.8 U	3.6 U	3.9 U	4 U	16 J	4 U	4.1 U
Endrin aldehyde	NA	3.8 U	NA	3.7 U	3.6 U	NA	3.7 U	3.7 U	3.8 U	3.6 U	3.9 U	4 U	4 U	4 U	4.1 U
Endrin ketone	NA	3.8 U	NA	3.7 U	3.6 U	NA	3.7 U	3.7 U	3.8 U	3.6 U	3.9 U	4 U	4 U	4 U	4.1 U
Heptachlor	NA	2 U	NA	1.9 U	1.8 U	NA	1.9 U	1.9 U	1.9 U	1.9 U	2 U	2.1 U	2 U	2 U	2.1 U
Heptachlor epoxide	NA	2 U	NA	1.9 U	1.8 U	NA	1.9 U	1.9 U	1.9 U	1.9 U	2 U	2.1 U	2 U	2 U	2.1 U
Methoxychlor	NA	20 U	NA	19 U	18 U	NA	19 U	19 U	19 U	19 U	20 U	21 U	20 U	20 U	21 U
Toxaphene	NA	200 U	NA	190 U	180 U	NA	190 U	190 U	190 U	190 U	200 U	210 U	200 U	200 U	210 U
alpha-BHC	NA	2 U	NA	1.9 U	1.8 U	NA	1.9 U	1.9 U	1.9 U	1.9 U	2 U	2.1 U	2 U	2 U	2.1 U
alpha-Chlordane	NA	2 U	NA	1.9 U	1.8 U	NA	1.9 U	1.9 U	1.9 U	1.9 U	2 U	2.1 U	2 U	2 U	2.1 U
beta-BHC	NA	2 U	NA	1.9 U	1.8 U	NA	1.9 U	1.9 U	1.9 U	1.9 U	2 U	2.1 U	2 U	2 U	2.1 U
delta-BHC	NA	2 U	NA	1.9 U	1.8 U	NA	1.9 U	1.9 U	1.9 U	1.9 U	2 U	2.1 U	2 U	2 U	2.1 U
gamma-BHC (Lindane)	NA	2 U	NA	1.9 U	1.8 U	NA	1.9 U	1.9 U	1.9 U	1.9 U	2 U	2.1 U	2 U	2 U	2.1 U
gamma-Chlordane	NA	2 U	NA	1.9 U	1.8 U	NA	1.9 U	1.9 U	1.9 U	1.9 U	2 U	2.1 U	2 U	2 U	2.1 U
Total Metals (MG/KG)															
Aluminum	NA	7,410 J	NA	4,080 J	3,120	NA	2,820 J	3,540 J	3,070 J	2,620 J	4,230 J	2,590 J	2,490 J	2,700	3,110
Antimony	NA	2.2 J	NA	0.41 UJ	0.38 UJ	NA	0.34 UJ	0.24 UJ	0.34 UJ	0.31 UJ	0.57 UJ	0.39 UJ	0.36 UJ	0.26 UJ	0.14 UJ
Arsenic	NA	179	NA	188	117	NA	10.2	1.6	1.4 U	56	13.6	5.7	5.2	5.1	4.5
Barium	NA	14.8 J	NA	31.7	23.8	NA	15.6 J	23.6	14.8 J	8.8 J	15.7 J	12.5 J	9.4 J	12 J	15.5 J
Beryllium	NA	0.095 J	NA	0.06 J	0.029 U	NA	0.044 J	0.07 J	0.058 J	0.05 J	0.06 J	0.039 J	0.041 J	0.049 U	0.057 J
Cadmium	NA	0.097 U	NA	0.069 U	0.095 U	NA	0.079 U	0.071 U	0.39 U	0.37 U	0.093 U	0.076 U	0.071 U	0.42 U	0.011 U
Calcium	NA	718	NA	617	743	NA	265 J	287 J	323 J	66.7 J	375 J	707	356 J	355 J	764
Chromium	NA	10.2 J	NA	3.3 J	2.8	NA	2.4 J	5.4 J	3.4 J	2.2 J	4.3 J	2.8 J	2.4 J	2.1	2.4
Cobalt	NA	0.55 J	NA	0.25 J	0.23 J	NA	0.19 J	0.21 J	0.2 J-	0.15 J-	0.32 J	0.22 J	0.19 J	0.12 U	0.13 U
Copper	NA	4.5 U	NA	4.2 U	5 U	NA	4.6 U	5.8 U	5 U	3.6 U	4.5 U	4.4 U	4.8 U	5.1	4.3 U
Iron	NA	2,900 J	NA	1,360 J	1,160	NA	943 J	1,070 J	958 J	858 J	1,580 J	985 J	954 J	955	1,100
Lead	NA	9.7	NA	11.4	20.7	NA	9.8	13.5	11.9	6.1	16	12	41	10.9 J	13 J
Magnesium	NA	380 J	NA	165 J	139 J	NA	123 J	136 J	134 J	89.3 J	233 J	192 J	162 J	123 J	161 J
Manganese	NA	11.2 J	NA	9.8 J	12.4	NA	11.5 J	9.4 J	13.3 J	12.2 J	8.1 J	27.4 J	9.7 J	5.8 J	24.4 J
Mercury	NA	0.1 U	NA	0.11	0.079 U	NA	0.034 U	0.078 U	0.067 U	0.035 U	0.11 J	0.082 U	0.068 U	0.029 J	0.041 J
Nickel	NA	1.3 J	NA	0.91 J	1 U	NA	0.59 J	0.82 J	0.75 J	0.49 J	1.1 J	0.85 J	0.61 J	0.67 J	0.76 J
Potassium	NA	377 J	NA	171 J	146 J	NA	135 J	143 J	145 J	81.8 J	254 J	172 J	232 J	128 J	146 J
Selenium	NA	0.49 U	NA	2.7 U	0.49 U	NA	0.081 U	0.27 U	0.21 U	0.34 U	0.75 U	0.71 U	0.056 U	0.65 U	0.5 U
Silver	NA	0.026 U	NA	0.76 U	0.034 U	NA	0.78 U	0.8 U	0.016 U	0.75 U	0.83 U	0.031 U	0.043 U	0.83 U	0.018 J
Sodium	NA	43.1 U	NA	29.2 U	26.8 U	NA	26.7 U	41.1 U	25 U	20 U	37.5 U	27.1 U	23.6 U	21.2 U	29.1 U
Thallium	NA	0.18 U	NA	1.9 U	0.14 U	NA	0.086 U	2 U	2 U	1.9 U	2.1 U	2.1 U	0.11 U	0.18 U	0.25 U
Vanadium	NA	13.4	NA	4.3	3.4 J	NA	3.2 J	3.7 J	3.5 J	3.2 J	6.5	4 J	3.5 J	3.3 J	3.8 J
Zinc	NA	9.8 U	NA	18.2	36.3	NA	21.7	17.1	15.1	5.2 U	18.4	15.5	13.7	12.7	12.6

Notes:
U- Analyte not detected
J- Reported value is estimated
J- - Reported value is biased low
UJ- Analyte not detected. Quantiation limit is imprecise
NA- Not analyzed
Shading represents detection

Site 95
Surface Soil Raw Analytical Data
October 2006

Station ID	IR95B-IS125		IR95B-IS126	IR95B-IS127	IR95B-IS128	IR95B-IS129	IR95B-IS130
Sample ID	IR95B-IS125-0-1-06D-2	IR95B-IS125D-0-1-06D-2	IR95B-IS126-0-1-06D-2	IR95B-IS127-0-1-06D-2	IR95B-IS128-0-1-06D-2	IR95B-IS129-0-1-06D-2	IR95B-IS130-0-1-06D-2
Sample Date	10/05/06	10/05/06	10/05/06	10/05/06	10/05/06	10/05/06	10/05/06
Chemical Name							
Pesticide/Polychlorinated Biphenyls (UG/KG)							
4,4'-DDD	3.9 U	3.9 U	3.8 U	4.1 U	3.8 U	3.9 U	3.9 U
4,4'-DDE	3.9 U	3.9 U	3.8 U	4.1 U	3.8 U	3.9 U	3.9 U
4,4'-DDT	3.9 U	3.9 U	3.8 U	4.1 U	3.8 U	3.9 U	3.9 U
Aldrin	2 U	2 U	1.9 U	2.1 U	2 U	2 U	2 U
Aroclor-1016	39 U	39 U	38 U	41 U	38 U	39 U	39 U
Aroclor-1221	79 U	79 U	76 U	83 U	78 U	79 U	79 U
Aroclor-1232	39 U	39 U	38 U	41 U	38 U	39 U	39 U
Aroclor-1242	39 U	39 U	38 U	41 U	38 U	39 U	39 U
Aroclor-1248	39 U	39 U	38 U	41 U	38 U	39 U	39 U
Aroclor-1254	39 U	39 U	38 U	41 U	38 U	39 U	39 U
Aroclor-1260	39 U	39 U	38 U	41 U	38 U	39 U	39 U
Dieldrin	3.9 U	3.9 U	3.8 U	4.1 U	3.8 U	3.9 U	3.9 U
Endosulfan I	2 U	2 U	1.9 U	2.1 U	2 U	2 U	2 U
Endosulfan II	3.9 U	3.9 U	3.8 U	4.1 U	3.8 U	3.9 U	3.9 U
Endosulfan sulfate	3.9 U	3.9 U	3.8 U	4.1 U	3.8 U	3.9 U	3.9 U
Endrin	3.9 U	3.9 U	3.8 U	4.1 U	3.8 U	3.9 U	3.9 U
Endrin aldehyde	3.9 U	3.9 U	3.8 U	4.1 U	3.8 U	3.9 U	3.9 U
Endrin ketone	3.9 U	3.9 U	3.8 U	4.1 U	3.8 U	3.9 U	3.9 U
Heptachlor	2 U	2 U	1.9 U	2.1 U	2 U	2 U	2 U
Heptachlor epoxide	2 U	2 U	1.9 U	2.1 U	2 U	2 U	2 U
Methoxychlor	20 U	20 U	19 U	21 U	20 U	20 U	20 U
Toxaphene	200 U	200 U	190 U	210 U	200 U	200 U	200 U
alpha-BHC	2 U	2 U	1.9 U	2.1 U	2 U	2 U	2 U
alpha-Chlordane	2 U	2 U	1.9 U	2.1 U	2 U	2 U	2 U
beta-BHC	2 U	2 U	1.9 U	2.1 U	2 U	2 U	2 U
delta-BHC	2 U	2 U	1.9 U	2.1 U	2 U	2 U	2 U
gamma-BHC (Lindane)	2 U	2 U	1.9 U	2.1 U	2 U	2 U	2 U
gamma-Chlordane	2 U	2 U	1.9 U	2.1 U	2 U	2 U	2 U
Total Metals (MG/KG)							
Aluminum	3,350	3,300	2,450	2,340	3,750	2,330	3,480
Antimony	0.17 UJ	0.17 UJ	0.21 UJ	0.24 UJ	0.35 UJ	0.28 UJ	0.15 UJ
Arsenic	6.8	6.8	0.72 U	0.53 U	0.42 U	0.45 U	0.52 U
Barium	16.3 J	16.7 J	10.5 J	12.1 J	27.8	10 J	12.1 J
Beryllium	0.06 J	0.058 J	0.042 U	0.04 U	0.058 J	0.037 U	0.047 J
Cadmium	0.4 U	0.42 U	0.39 U	0.44 U	0.4 U	0.0062 U	0.4 U
Calcium	274 J	301 J	125 J	285 J	1,560	314 J	112 J
Chromium	2.7	2.8	3.5	4	4.3	5.5	3.7
Cobalt	0.14 U	0.15 U	0.12 U	0.14 U	0.21 U	0.12 U	0.17 U
Copper	3.7 U	4 U	3.2 U	4.1	5	3.9 U	4.2
Iron	1,170	1,180	834	807	1,110	787	1,060
Lead	19.6 J	18.1 J	11.5 J	15.7 J	20.5 J	14.4 J	14.3 J
Magnesium	152 J	151 J	91 J	130 J	294 J	111 J	148 J
Manganese	11.1 J	11.9 J	5.1 J	8.2 J	82.6 J	5.6 J	5.9 J
Mercury	0.038 J	0.037 J	0.1	0.052 J	0.081 J	0.051 J	0.05 J
Nickel	0.76 J	0.79 J	0.55 J	0.62 J	1.2 J	0.67 J	0.85 J
Potassium	155 J	158 J	86.2 UJ	220 J	225 J	134 J	142 J
Selenium	0.48 U	0.5 U	0.43 U	0.45 U	0.59 U	0.49 U	0.5 U
Silver	0.81 U	0.049 J	0.77 U	0.018 J	0.79 U	0.81 U	0.81 U
Sodium	27.7 U	31 U	26.2 U	24.9 U	32 U	22.1 U	24.5 U
Thallium	0.12 U	0.12 U	0.16 U	0.071 U	0.25 U	2 U	0.16 U
Vanadium	4.2	4.2 J	3 J	3.3 J	4.2	3.1 J	4.2
Zinc	12.6	14.4	8.9 U	9.6 U	24	8 U	12.7

Notes:
U- Analyte not detected
J- Reported value is estimated
J- - Reported value is biased low
UJ- Analyte not detected. Quantiation limit is imprecise
NA- Not analyzed
Shading represents detection

CTO-105
Site 95 Lyman Road
Groundwater Exceedances of Screening Criteria
MCB Camp Lejeune, North Carolina
March 2006

Station ID	NC2LGW (May2005)	IR95C-MW01	IR95C-MW02	IR95C-MW03
Sample ID		IR95C-GW01-06A	IR95C-GW02-06A	IR95C-GW03-06A
Sample Date		03/10/06	03/10/06	03/09/06
Chemical Name				
VOCs (UG/L)				
Chloroform	70	12	2	0.56
SVOCs (UG/L)				
No Detections				
PEST/PCBs (UG/L)				
No Detections				
Total Metals (UG/L)				
Aluminum	--	222	352	495
Arsenic	50	10 U	10 U	11
Copper	1,000	25 U	25 U	9.6 J
Iron	300	112	100 U	188
Potassium	--	1,500 J	1,190 J	2,850 J
Sodium	--	10,500	12,200	12,200
Wet Chemistry (MG/L)				
Chloride	250	19	18	16
Nitrate	10	1.3 J	0.64 J	0.13 R
Sulfate	250	8.3	12	12
Total organic carbon (TOC)	--	10	10	10

Notes:
U- Analyte not detected
J- Reported value is estimated
R- Unreliable result
Shading represents exceedance of NC2L Groundwater criteria
VOCs- Volatile Organic Compounds
SVOCs- Semi- Volatile Organic Compounds
PEST/PCBs- Pesticides/Polychlorinated Biphenyls

CTO-105
Site 95 Lyman Road
Groundwater Detections
MCB Camp Lejeuene, North Carolina
March 2006

Station ID	IR95C-MW01	IR95C-MW02	IR95C-MW03
Sample ID	IR95C-GW01-06A	IR95C-GW02-06A	IR95C-GW03-06A
Sample Date	03/10/06	03/10/06	03/09/06
Chemical Name			
VOCs (UG/L)			
1,1,1-Trichloroethane	0.5 U	0.5 U	0.5 U
1,1,2,2-Tetrachloroethane	0.5 U	0.5 U	0.5 U
1,1,2-Trichloro-1,2,2-trifluoroethane(Freon-113)	0.5 U	0.5 U	0.5 U
1,1,2-Trichloroethane	0.5 U	0.5 U	0.5 U
1,1-Dichloroethane	0.5 U	0.5 U	0.5 U
1,1-Dichloroethene	0.5 UJ	0.5 UJ	0.5 UJ
1,2,3-Trichlorobenzene	0.5 U	0.5 U	0.5 U
1,2,4-Trichlorobenzene	0.5 U	0.5 U	0.5 U
1,2-Dibromo-3-chloropropane	0.5 U	0.5 U	0.5 U
1,2-Dibromoethane	0.5 U	0.5 U	0.5 U
1,2-Dichlorobenzene	0.5 U	0.5 U	0.5 U
1,2-Dichloroethane	0.5 U	0.5 U	0.5 U
1,2-Dichloropropane	0.5 U	0.5 U	0.5 U
1,3-Dichlorobenzene	0.5 U	0.5 U	0.5 U
1,4-Dichlorobenzene	0.5 U	0.5 U	0.5 U
2-Butanone	5 U	5 U	5 U
2-Hexanone	5 U	5 U	5 U
4-Methyl-2-pentanone	5 U	5 U	5 U
Acetone	5 U	5 U	5 U
Benzene	0.5 U	0.5 U	0.5 U
Bromochloromethane	0.5 U	0.5 U	0.5 U
Bromodichloromethane	0.5 U	0.5 U	0.5 U
Bromoform	0.5 U	0.5 U	0.5 U
Bromomethane	0.5 U	0.5 U	0.5 U
Carbon disulfide	0.5 U	0.5 U	0.5 U
Carbon tetrachloride	0.5 U	0.5 U	0.5 U
Chlorobenzene	0.5 U	0.5 U	0.5 U
Chloroethane	0.5 U	0.5 U	0.5 U
Chloroform	12	2	0.56
Chloromethane	0.5 U	0.5 U	0.5 U
Cyclohexane	0.5 U	0.5 U	0.5 U
Dibromochloromethane	0.5 U	0.5 U	0.5 U
Dichlorodifluoromethane (Freon-12)	0.5 UJ	0.5 UJ	0.5 UJ
Ethylbenzene	0.5 U	0.5 U	0.5 U
Methyl acetate	0.5 U	0.5 U	0.5 U
Methyl-tert-butyl ether (MTBE)	0.5 U	0.5 U	0.5 U
Methylcyclohexane	0.5 U	0.5 U	0.5 U
Methylene chloride	0.75 U	0.5 U	0.99 U
Styrene	0.5 U	0.5 U	0.5 U
Tetrachloroethene	0.5 U	0.5 U	0.5 U
Toluene	0.5 U	0.5 U	0.5 U
Trichloroethene	0.5 U	0.5 U	0.5 U
Trichlorofluoromethane(Freon-11)	0.5 U	0.5 U	0.5 U
Vinyl chloride	0.5 U	0.5 U	0.5 U
Xylene, total	0.5 U	0.5 U	0.5 U
cis-1,2-Dichloroethene	0.5 U	0.5 U	0.5 U
cis-1,3-Dichloropropene	0.5 U	0.5 U	0.5 U
isopropylbenzene	0.5 U	0.5 U	0.5 U
trans-1,2-Dichloroethene	0.5 U	0.5 U	0.5 U
trans-1,3-Dichloropropene	0.5 U	0.5 U	0.5 U
SVOCs (UG/L)			
1,1-Biphenyl	5 U	5 UJ	5 U
1,2,4,5-Tetrachlorobenzene	5 U	5 UJ	5 U
2,2'-oxybis(1-chloropropane)	5 U	5 UJ	5 U
2,4,5-Trichlorophenol	20 U	20 UJ	20 U
2,4,6-Trichlorophenol	5 U	5 UJ	5 U
2,4-Dichlorophenol	5 U	5 UJ	5 U
2,4-Dimethylphenol	5 U	5 UJ	5 U
2,4-Dinitrophenol	20 U	20 UJ	20 U
2,4-Dinitrotoluene	5 U	5 UJ	5 U
2,6-Dinitrotoluene	5 U	5 UJ	5 U
2-Chloronaphthalene	5 U	5 UJ	5 U
2-Chlorophenol	5 U	5 UJ	5 U
2-Methylnaphthalene	5 U	5 UJ	5 U
2-Methylphenol	5 U	5 UJ	5 U
2-Nitroaniline	20 U	20 UJ	20 U
2-Nitrophenol	5 U	5 UJ	5 U
3,3'-Dichlorobenzidine	5 U	5 UJ	5 R

CTO-105
Site 95 Lyman Road
Groundwater Detections
MCB Camp Lejeuene, North Carolina
March 2006

Station ID	IR95C-MW01	IR95C-MW02	IR95C-MW03
Sample ID	IR95C-GW01-06A	IR95C-GW02-06A	IR95C-GW03-06A
Sample Date	03/10/06	03/10/06	03/09/06
Chemical Name			
3-Nitroaniline	20 U	20 UJ	20 U
4,6-Dinitro-2-methylphenol	20 U	20 UJ	20 U
4-Bromophenyl-phenylether	5 U	5 UJ	5 U
4-Chloro-3-methylphenol	5 U	5 UJ	5 U
4-Chloroaniline	5 U	5 UJ	5 R
4-Chlorophenyl-phenylether	5 U	5 UJ	5 U
4-Methylphenol	5 U	5 UJ	5 U
4-Nitroaniline	20 U	20 UJ	20 U
4-Nitrophenol	20 U	20 UJ	20 U
Acenaphthene	5 U	5 UJ	5 U
Acenaphthylene	5 U	5 UJ	5 U
Acetophenone	5 U	5 UJ	5 U
Anthracene	5 U	5 UJ	5 U
Atrazine	5 U	5 UJ	5 U
Benzaldehyde	5 U	5 UJ	5 U
Benzo(a)anthracene	5 U	5 UJ	5 U
Benzo(a)pyrene	5 U	5 UJ	5 U
Benzo(b)fluoranthene	5 U	5 UJ	5 U
Benzo(g,h,i)perylene	5 U	5 UJ	5 U
Benzo(k)fluoranthene	5 U	5 UJ	5 U
Butylbenzylphthalate	5 U	5 UJ	5 U
Caprolactam	5 U	5 UJ	5 U
Chrysene	5 U	5 UJ	5 U
Di-n-butylphthalate	5 U	5 UJ	5 U
Di-n-octylphthalate	5 U	5 UJ	5 U
Dibenz(a,h)anthracene	5 U	5 UJ	5 U
Dibenzofuran	5 U	5 UJ	5 U
Diethylphthalate	5 U	5 UJ	5 U
Dimethyl phthalate	5 U	5 UJ	5 U
Fluoranthene	5 U	5 UJ	5 U
Fluorene	5 U	5 UJ	5 U
Hexachlorobenzene	5 U	5 UJ	5 U
Hexachlorobutadiene	5 U	5 UJ	5 U
Hexachlorocyclopentadiene	5 U	5 UJ	5 R
Hexachloroethane	5 U	5 UJ	5 U
Indeno(1,2,3-cd)pyrene	5 U	5 UJ	5 U
Isophorone	5 U	5 UJ	5 U
Naphthalene	5 U	5 UJ	5 U
Nitrobenzene	5 U	5 UJ	5 U
Pentachlorophenol	5 U	5 UJ	5 U
Phenanthrene	5 U	5 UJ	5 U
Phenol	5 U	5 UJ	5 U
Pyrene	5 U	5 UJ	5 U
bis(2-Chloroethoxy)methane	5 U	5 UJ	5 U
bis(2-Chloroethyl)ether	5 U	5 UJ	5 U
bis(2-Ethylhexyl)phthalate	5 U	5 UJ	5 U
n-Nitroso-di-n-propylamine	5 U	5 UJ	5 U
n-Nitrosodiphenylamine	5 U	5 UJ	5 U
PEST/PCBs (UG/L)			
4,4'-DDD	0.02 U	0.02 UJ	0.02 U
4,4'-DDE	0.02 U	0.02 UJ	0.02 U
4,4'-DDT	0.02 U	0.02 UJ	0.02 U
Aldrin	0.01 U	0.01 UJ	0.01 U
Aroclor-1016	0.2 U	0.2 UJ	0.2 U
Aroclor-1221	0.4 U	0.4 UJ	0.4 U
Aroclor-1232	0.2 U	0.2 UJ	0.2 U
Aroclor-1242	0.2 U	0.2 UJ	0.2 U
Aroclor-1248	0.2 U	0.2 UJ	0.2 U
Aroclor-1254	0.2 U	0.2 UJ	0.2 U
Aroclor-1260	0.2 U	0.2 UJ	0.2 U
Dieldrin	0.02 U	0.02 UJ	0.02 U
Endosulfan I	0.01 U	0.01 UJ	0.01 U
Endosulfan II	0.02 U	0.02 UJ	0.02 U
Endosulfan sulfate	0.02 U	0.02 UJ	0.02 U
Endrin	0.02 U	0.02 UJ	0.02 U
Endrin aldehyde	0.02 U	0.02 UJ	0.02 U
Endrin ketone	0.02 U	0.02 UJ	0.02 U
Heptachlor	0.01 U	0.01 UJ	0.01 U
Heptachlor epoxide	0.01 U	0.01 UJ	0.01 U
Methoxychlor	0.1 U	0.1 UJ	0.1 U

CTO-105
Site 95 Lyman Road
Groundwater Detections
MCB Camp Lejeuene, North Carolina
March 2006

Station ID	IR95C-MW01	IR95C-MW02	IR95C-MW03
Sample ID	IR95C-GW01-06A	IR95C-GW02-06A	IR95C-GW03-06A
Sample Date	03/10/06	03/10/06	03/09/06
Chemical Name			
Toxaphene	1 U	1 UJ	1 U
alpha-BHC	0.01 U	0.01 UJ	0.01 U
alpha-Chlordane	0.01 U	0.01 UJ	0.01 U
beta-BHC	0.01 U	0.01 UJ	0.01 U
delta-BHC	0.01 U	0.01 UJ	0.01 U
gamma-BHC (Lindane)	0.01 U	0.01 UJ	0.01 U
gamma-Chlordane	0.01 U	0.01 UJ	0.01 U
Total Metals (UG/L)			
Aluminum	222	352	495
Antimony	60 U	60 U	60 U
Arsenic	10 U	10 U	11
Barium	200 U	200 U	200 U
Beryllium	5 U	5 U	5 U
Cadmium	5 U	5 U	5 U
Calcium	5,000 UJ	5,000 UJ	5,000 UJ
Chromium	10 U	10 U	10 U
Cobalt	50 U	50 U	50 U
Copper	25 U	25 U	9.6 J
Iron	112	100 U	188
Lead	10 U	10 U	10 U
Magnesium	5,000 UJ	5,000 UJ	5,000 UJ
Manganese	15 U	15 U	15 U
Mercury	0.28 U	0.28 U	0.3 U
Nickel	40 U	40 U	40 U
Potassium	1,500 J	1,190 J	2,850 J
Selenium	35 U	35 U	35 U
Silver	10 U	10 U	10 U
Sodium	10,500	12,200	12,200
Thallium	25 U	25 U	25 U
Vanadium	50 U	50 U	50 U
Zinc	60 U	60 U	60 U
Wet Chemistry (MG/L)			
Alkalinity	20 U	20 U	20 U
Chloride	19	18	16
Ethane	0.027 U	0.027 U	0.026 U
Ethene	0.036 U	0.036 U	0.035 U
Ferric iron	10 UJ	10 UJ	10 UJ
Ferrous iron	1 UJ	1 UJ	1 UJ
Methane	0.014 U	0.014 U	0.014 U
Nitrate	1.3 J	0.64 J	0.13 R
Nitrite	0.13 U	0.13 U	0.13 U
Sulfate	8.3	12	12
Sulfide	0.03 U	0.03 U	0.03 U
Total organic carbon (TOC)	10	10	10

Notes:
U- Analyte not detected
J- Reported value is estimated
R- Unreliable result
UJ- Analyte not detected. Quantitation limit is imprecise
Shading represents detection
VOCs- Volatile Organic Compounds
SVOCs- Semi- Volatile Organic Compounds
PEST/PCBs- Pesticides/Polychlorinated Biphenyls

CTO-105
Site 95 Lyman Road
Groundwater Detections
MCB Camp Lejeune, North Carolina
March 2006

Station ID	IR95C-MW01	IR95C-MW02	IR95C-MW03
Sample ID	IR95C-GW01-06A	IR95C-GW02-06A	IR95C-GW03-06A
Sample Date	03/10/06	03/10/06	03/09/06
Chemical Name			
VOCs (UG/L)			
Chloroform	12	2	0.56
Total Metals (UG/L)			
Aluminum	222	352	495
Arsenic	10 U	10 U	11
Copper	25 U	25 U	9.6 J
Iron	112	100 U	188
Potassium	1,500 J	1,190 J	2,850 J
Sodium	10,500	12,200	12,200
Wet Chemistry (MG/L)			
Chloride	19	18	16
Nitrate	1.3 J	0.64 J	0.13 R
Sulfate	8.3	12	12

Notes:
U- Analyte not detected
J- Reported value is estimated
R- Unreliable result
Shading represents detection
VOCs- Volatile Organic Compounds

Site 95 Subsurface Soil Raw Analytical Data
October 2006

Station ID		IR95C-IS115	IR95C-IS117	IR95C-IS119	IR95C-IS121	IR95C-IS123		IR95C-IS125	IR95C-IS127
Sample ID	2	IR95C-IS115-3-4-06D-2	IR95C-IS117-3-4-06D-2	IR95C-IS119-3-4-06D-2	IR95C-IS121-3-4-06D-2	IR95C-IS123-3-4-06D-2	IR95C-IS123D-3-4-06D-2	IR95C-IS125-3-4-06D-2	IR95C-IS127-3-4-06D-2
Sample Date		10/03/06	10/03/06	10/03/06	10/03/06	10/03/06	10/03/06	10/03/06	10/03/06
Chemical Name									
Pesticide/Polychlorinated Biphenyls (UG/KG)									
4,4'-DDD	U	3.8 U	3.8 U	3.6 U	3.7 U	3.7 U	3.8 U	3.6 U	3.9 U
4,4'-DDE	U	3.8 U	3.8 U	3.6 U	3.7 U	3.7 U	3.8 U	3.6 U	3.9 U
4,4'-DDT	U	3.8 U	3.8 U	3.6 U	3.7 U	5.1 J	3.8 U	3.6 U	3.9 U
Aldrin	U	2 U	2 U	1.8 U	1.9 U	1.9 U	1.9 U	1.9 U	2 U
Aroclor-1016	U	38 U	38 U	36 U	37 U	37 U	38 U	36 U	39 U
Aroclor-1221	U	78 U	78 U	73 U	74 U	76 U	77 U	74 U	79 U
Aroclor-1232	U	38 U	38 U	36 U	37 U	37 U	38 U	36 U	39 U
Aroclor-1242	U	38 U	38 U	36 U	37 U	37 U	38 U	36 U	39 U
Aroclor-1248	U	38 U	38 U	36 U	37 U	37 U	38 U	36 U	39 U
Aroclor-1254	U	38 U	38 U	36 U	37 U	37 U	38 U	36 U	39 U
Aroclor-1260	U	38 U	38 U	36 U	37 U	37 U	38 U	36 U	39 U
Dieldrin	U	3.8 U	3.8 U	3.6 U	3.7 U	3.7 U	3.8 U	3.6 U	3.9 U
Endosulfan I	U	2 U	2 U	1.8 U	1.9 U	1.9 U	1.9 U	1.9 U	2 U
Endosulfan II	U	3.8 U	3.8 U	3.6 U	3.7 U	3.7 U	3.8 U	3.6 U	3.9 U
Endosulfan sulfate	U	3.8 U	3.8 U	3.6 U	3.7 U	3.7 U	3.8 U	3.6 U	3.9 U
Endrin	U	3.8 U	3.8 U	3.6 U	3.7 U	3.7 U	3.8 U	3.6 U	3.9 U
Endrin aldehyde	U	3.8 U	3.8 U	3.6 U	3.7 U	2.3 J	3.8 U	3.6 U	3.9 U
Endrin ketone	U	3.8 U	3.8 U	3.6 U	3.7 U	3.7 U	3.8 U	3.6 U	3.9 U
Heptachlor	U	2 U	2 U	1.8 U	1.9 U	1.9 U	1.9 U	1.9 U	2 U
Heptachlor epoxide	U	2 U	2 U	1.8 U	1.9 U	1.9 U	1.9 U	1.9 U	2 U
Methoxychlor	U	20 U	20 U	18 U	19 U	47	23 J	19 U	20 U
Toxaphene	U	200 U	200 U	180 U	190 U	190 U	190 U	190 U	200 U
alpha-BHC	U	2 U	2 U	1.8 U	1.9 U	1.9 U	1.9 U	1.9 U	2 U
alpha-Chlordane	U	2 U	2 U	1.8 U	1.9 U	1.9 U	1.9 U	1.9 U	2 U
beta-BHC	U	2 U	2 U	1.8 U	1.9 U	1.9 U	1.9 U	1.9 U	2 U
delta-BHC	U	2 U	2 U	1.8 U	1.9 U	1.9 U	1.9 U	1.9 U	2 U
gamma-BHC (Lindane)	U	2 U	2 U	1.8 U	1.9 U	1.9 U	1.9 U	1.9 U	2 U
gamma-Chlordane	U	2 U	2 U	1.8 U	1.9 U	1.9 U	1.9 U	1.9 U	2 U
Total Metals (MG/KG)									
Aluminum	J	13,200	21,300	846	5,480	2,360	2,580	2,000	21,600
Antimony	UJ	4.8 UJ	5 UJ	0.049 UJ	4.8 UJ	4.8 UJ	0.086 UJ	0.16 UJ	0.36 UJ
Arsenic	UJ	1.4	2.2	0.079 U	1.7	0.072 U	0.18 U	0.12 U	1.8
Barium	J	14.1 J	18 J	2.4 J	7.3 J	19.2 J	24.7 J	3.6 J	20.7 J
Beryllium	J	0.08 J	0.12 J	0.02 J	0.068 J	0.038 J	0.044 J	0.031 J	0.11 J
Cadmium	UJ	0.4 U	0.42 U	0.37 U	0.4 U	0.4 U	0.39 U	0.38 U	0.42 U
Calcium	UJ	400 U	420 UJ	27.9 UJ	8.9 UJ	155 J	161 J	32.5 UJ	142 J
Chromium	J	13.1	20 J	1.8 J	12.3 J	2.4 J	2.5 J	2.7 J	19.8 J
Cobalt	J	0.69 J	1.1 J	0.13 J	0.38 J	0.14 J	0.15 J	0.15 J	1 J
Copper	U	4 U	5 U	2.1 U	3.3 U	2.9 U	3.3 U	2.8 U	5.1 U
Iron	J	6,850	11,600 J	408 J	3,880 J	1,070 J	1,180 J	983 J	9,830 J
Lead	J	6.1	6.9	2.4	4	3	3.4	3.2	7.9
Magnesium	J	310 J	491 J	33.2 J	185 J	54 J	60.6 J	52.4 J	551 J
Manganese	J	5.3	8.8 J	3.2 J	4.4 J	3.9 J	4.2 J	3.7 J	7.8 J
Mercury	U	0.11 UJ	0.012 J-	0.09 UJ	0.092 UJ	0.1 UJ	0.095 UJ	0.089 UJ	0.11 UJ
Nickel	J	2.5 J	3.9 J	0.31 UJ	3.1 J	0.6 UJ	0.68 UJ	0.61 UJ	3.8 J
Potassium	J	275 J	485 J	62.2 J	332 J	68.9 J	72.1 J	76.3 J	453 J
Selenium	U	0.28 U	0.98 U	0.38 U	0.55 U	0.6 U	0.51 U	0.38 U	0.71 U
Silver	U	0.062 U	0.073 U	0.048 U	0.049 U	0.018 U	0.78 U	0.021 U	0.11 U
Sodium	U	26.5 U	52.4 UJ	20.7 UJ	29.4 UJ	33 UJ	43.2 UJ	29.5 UJ	54 UJ
Thallium	U	1.1 U	0.61 U	0.13 U	0.35 U	0.12 U	0.16 U	0.13 U	0.38 U
Vanadium	J	20.6	31.3	1.6 J	17.3	2.7 J	3.1 J	2.7 J	26.6
Zinc	U	5.8 U	7.9 UJ	2.2 UJ	4.9 UJ	2.5 UJ	2.6 UJ	3 UJ	7.8 UJ

Notes:
U- Analyte not detected
J- Reported value is estimated
J- - Reported value is biased low
UJ- Analyte not detected. Quantiation limit is imprecise
NA- Not analyzed
Shading represents detection

Site 95 Subsurface Soil Raw Analytical Data
October 2006

Station ID		IR95B-IS125	IR95B-IS127		IR95B-IS129	IR95C-IS100	IR95C-IS101		IR95C-IS102	IR95C-IS103	IR95C-IS105	IR95C-IS107	IR95C-IS109	IR95C-IS111	IR95C-IS113	
Sample ID	2	IR95B-IS125-3-4-06D-2	IR95B-IS127-3-4-06D-2	IR95B-IS127D-3-4-06D-2	IR95B-IS129-3-4-06D-2	IR95C-IS100-3-4-06D-1	IR95C-IS101-3-4-06D-1	IR95C-IS101-3-4-06D-2	IR95C-IS102-3-4-06D-1	IR95C-IS103-3-4-06D-2	IR95C-IS105-3-4-06D-2	IR95C-IS107-3-4-06D-2	IR95C-IS109-3-4-06D-2	IR95C-IS111-3-4-06D-2	IR95C-IS113-3-4-06D-2	IR95C-IS113D-3-4-06D
Sample Date		10/05/06	10/05/06	10/05/06	10/05/06	10/03/06	10/03/06	10/03/06	10/03/06	10/03/06	10/03/06	10/03/06	10/03/06	10/03/06	10/03/06	10/03/06
Chemical Name																
Pesticide/Polychlorinated Biphenyls (UG/KG)																
4,4'-DDD	U	3.8 U	3.8 U	3.9 U	3.8 U	NA	NA	3.8 U	NA	3.6 U	3.7 U	3.6 U	3.7 U	3.7 U	3.6 U	3.6
4,4'-DDE	U	3.8 U	3.8 U	3.9 U	3.8 U	NA	NA	3.8 U	NA	3.6 U	3.7 U	3.6 U	3.7 U	3.7 U	3.6 U	3.6
4,4'-DDT	U	3.8 U	3.8 U	3.9 U	3.8 U	NA	NA	3.8 U	NA	3.6 U	3.7 U	3.6 U	3.7 U	3.7 U	3.6 U	3.6
Aldrin	U	1.9 U	2 U	2 U	1.9 U	NA	NA	1.9 U	NA	1.8 U	1.9 U	1.8 U	1.9 U	1.9 U	1.8 U	1.8
Aroclor-1016	U	38 U	38 U	39 U	38 U	NA	NA	38 U	NA	36 U	37 U	36 U	37 U	37 U	36 U	36
Aroclor-1221	U	77 U	77 U	79 U	76 U	NA	NA	76 U	NA	73 U	76 U	73 U	75 U	76 U	72 U	73
Aroclor-1232	U	38 U	38 U	39 U	38 U	NA	NA	38 U	NA	36 U	37 U	36 U	37 U	37 U	36 U	36
Aroclor-1242	U	38 U	38 U	39 U	38 U	NA	NA	38 U	NA	36 U	37 U	36 U	37 U	37 U	36 U	36
Aroclor-1248	U	38 U	38 U	39 U	38 U	NA	NA	38 U	NA	36 U	37 U	36 U	37 U	37 U	36 U	36
Aroclor-1254	U	38 U	38 U	39 U	38 U	NA	NA	38 U	NA	36 U	37 U	36 U	37 U	37 U	36 U	36
Aroclor-1260	U	38 U	38 U	39 U	38 U	NA	NA	38 U	NA	36 U	37 U	36 U	37 U	37 U	36 U	36
Dieldrin	U	3.8 U	3.8 U	3.9 U	3.8 U	NA	NA	3.8 U	NA	3.6 U	3.7 U	3.6 U	3.7 U	3.7 U	3.6 U	3.6
Endosulfan I	U	1.9 U	2 U	2 U	1.9 U	NA	NA	1.9 U	NA	1.8 U	1.9 U	1.8 U	1.9 U	1.9 U	1.8 U	1.8
Endosulfan II	U	3.8 U	3.8 U	3.9 U	3.8 U	NA	NA	3.8 U	NA	3.6 U	3.7 U	3.6 U	3.7 U	3.7 U	3.6 U	3.6
Endosulfan sulfate	U	3.8 U	3.8 U	3.9 U	3.8 U	NA	NA	3.8 U	NA	3.6 U	3.7 U	3.6 U	3.7 U	3.7 U	3.6 U	3.6
Endrin	U	3.8 U	3.8 U	3.9 U	3.8 U	NA	NA	3.8 U	NA	3.6 U	3.7 U	3.6 U	3.7 U	3.7 U	3.6 U	3.6
Endrin aldehyde	U	3.8 U	3.8 U	3.9 U	3.8 U	NA	NA	3.8 U	NA	3.6 U	3.7 U	3.6 U	3.7 U	3.7 U	3.6 U	3.6
Endrin ketone	U	3.8 U	3.8 U	3.9 U	3.8 U	NA	NA	3.8 U	NA	3.6 U	3.7 U	3.6 U	3.7 U	3.7 U	3.6 U	3.6
Heptachlor	U	1.9 U	2 U	2 U	1.9 U	NA	NA	1.9 U	NA	1.8 U	1.9 U	1.8 U	1.9 U	1.9 U	1.8 U	1.8
Heptachlor epoxide	U	1.9 U	2 U	2 U	1.9 U	NA	NA	1.9 U	NA	1.8 U	1.9 U	1.8 U	1.9 U	1.9 U	1.8 U	1.8
Methoxychlor	U	19 U	20 U	20 U	19 U	NA	NA	19 U	NA	18 U	19 U	18 U	19 U	19 U	18 U	18
Toxaphene	U	190 U	200 U	200 U	190 U	NA	NA	190 U	NA	180 U	190 U	180 U	190 U	190 U	180 U	180
alpha-BHC	U	1.9 U	2 U	2 U	1.9 U	NA	NA	1.9 U	NA	1.8 U	1.9 U	1.8 U	1.9 U	1.9 U	1.8 U	1.8
alpha-Chlordane	U	1.9 U	2 U	2 U	1.9 U	NA	NA	1.9 U	NA	1.8 U	1.9 U	1.8 U	1.9 U	1.9 U	1.8 U	1.8
beta-BHC	U	1.9 U	2 U	2 U	1.9 U	NA	NA	1.9 U	NA	1.8 U	1.9 U	1.8 U	1.9 U	1.9 U	1.8 U	1.8
delta-BHC	U	1.9 U	2 U	2 U	1.9 U	NA	NA	1.9 U	NA	1.8 U	1.9 U	1.8 U	1.9 U	1.9 U	1.8 U	1.8
gamma-BHC (Lindane)	U	1.9 U	2 U	2 U	1.9 U	NA	NA	1.9 U	NA	1.8 U	1.9 U	1.8 U	1.9 U	1.9 U	1.8 U	1.8
gamma-Chlordane	U	1.9 U	2 U	2 U	1.9 U	NA	NA	1.9 U	NA	1.8 U	1.9 U	1.8 U	1.9 U	1.9 U	1.8 U	1.8
Total Metals (MG/KG)																
Aluminum	J	11,700 J	12,000 J	11,100	7,510 J	NA	NA	11,100 J	NA	4,220 J	11,700 J	2,880 J	11,800 J	10,300	6,020 J	6,320
Antimony	UJ	0.31 UJ	0.19 UJ	0.46 UJ	0.18 UJ	NA	NA	4.9 UJ	NA	0.098 UJ	0.063 UJ	0.14 UJ	0.58 UJ	0.12 UJ	4.6 UJ	0.057
Arsenic		2	3.1	3.6	1.7	NA	NA	0.094 UJ	NA	1.3 J-	0.79 UJ	0.13 UJ	0.76 UJ	0.49 U	1.2 J-	0.96
Barium	J	16.2	13.5 J	12.5 J	8.3 J	NA	NA	13.3 J	NA	6.4 J	16.9 J	5.8 J	14.6 J	12.6 J	9.7 J	9.9
Beryllium	J	0.12 J	0.14 J	0.056 J	0.082 J	NA	NA	0.099 J	NA	0.068 J	0.14 J	0.036 J	0.15 J	0.11 J	0.097 J	0.096
Cadmium	U	0.39 U	0.4 U	0.31 J	0.41 U	NA	NA	0.4 UJ	NA	0.38 UJ	0.4 UJ	0.37 UJ	0.4 UJ	0.39 U	0.38 UJ	0.37
Calcium	J	118 J	158 J	248 J	107 J	NA	NA	89.7 UJ	NA	36.1 UJ	400 UJ	370 UJ	400 UJ	390 UJ	380 UJ	196
Chromium	J	14.7 J	18.5 J	19.4	10.2 J	NA	NA	11 J	NA	6.3 J-	14.2 J	3 J-	14.2 J	11.4 J	8.8 J	9
Cobalt	J-	0.91 J-	0.97 J-	1.1 J	0.51 J-	NA	NA	0.71 J	NA	0.24 U	0.66 J	0.18 U	0.71 J	0.57 J	0.4 U	0.44
Copper	U	5.1 U	5.2 U	6 U	4.3 U	NA	NA	3.8 U	NA	3.2 U	4.8 U	2.6 U	4.5 U	4.1 U	4 U	3.6
Iron	J	5,240 J	5,910 J	6,900	2,780 J	NA	NA	3,040 J	NA	3,100 J	3,770 J	748 J	3,790 J	3,490 J	4,500 J	3,930
Lead		7.1	7.1	6.7	6	NA	NA	5.9 J	NA	3.3 J	6.5 J	3.7 J	5.8 J	6	4.3 J	4.3
Magnesium	J	473 J	494 J	444	323 J	NA	NA	341 J	NA	174 J	421 J	81.8 J	415 J	352 J	247 J	263
Manganese	J	7.4 J	7.1 J	6.1	5 J	NA	NA	7.1 J	NA	3.9 J	7 J	4.3 J	8.5 J	5.8 J	5.2 J	5.3
Mercury	U	0.032 U	0.026 U	0.027 U	0.027 U	NA	NA	0.099 U	NA	0.1 U	0.099 U	0.095 U	0.1 U	0.091 UJ	0.039 J	0.099
Nickel	J	1.8 J	1.7 J	2.2 J	1.2 J	NA	NA	2.4 J	NA	1.1 J	2.4 J	0.91 J	2.5 J	2.1 J	1.4 J	1.5
Potassium	J	449 J	553 J	461 J	367 J	NA	NA	459 J	NA	329 J	653 J	114 J	790 J	550 J	480 J	487
Selenium	U	1.1 U	1.5 U	1.5 U	0.59 U	NA	NA	0.31 U	NA	0.25 U	0.42 U	0.39 U	0.22 U	0.52 U	0.16 U	0.7
Silver	U	0.019 U	0.79 U	0.2 U	0.023 U	NA	NA	0.082 U	NA	0.024 U	0.045 U	0.03 U	0.023 U	0.77 U	0.056 U	0.04
Sodium	U	43.2 U	63.6 U	42.8 U	32.3 U	NA	NA	46 U	NA	30.5 U	43.7 U	24.1 U	36.8 U	38.5 UJ	39 U	33.5
Thallium	U	0.2 U	0.16 U	0.46 U	2 U	NA	NA	0.24 U	NA	0.095 U	0.74 U	0.18 U	2 U	0.18 U	0.72 U	0.36
Vanadium		20	23.1	22.9 J	12.9	NA	NA	15.4 J	NA	9.6 J	23.9 J	2.9 J	20.7 J	16.6	13.3 J	13.7
Zinc	U	6.8 U	7.7 U	9.7 U	6.5 U	NA	NA	5.8 U	NA	3.9 U	6.1 U	3.1 U	8.2 U	6.1 UJ	5 U	4.9

Notes:
U- Analyte not detected
J- Reported value is estimated
J- - Reported value is biased low
UJ- Analyte not detected. Quantiation limit is imprecise
NA- Not analyzed
Shading represents detection

Site 95 Subsurface Soil Raw Analytical Data
October 2006

Station ID	IR95B-IS107	IR95B-IS109		IR95B-IS111	IR95B-IS113	IR95B-IS114	IR95B-IS115		IR95B-IS116		IR95B-IS117		IR95B-IS119	IR95B-IS121	IR95B-IS123
Sample ID	IR95B-IS107-3-4-06D-2	IR95B-IS109-3-4-06D-2	IR95B-IS109D-3-4-06D-2	IR95B-IS111-3-4-06D-2	IR95B-IS113-3-4-06D-2	IR95B-IS114-3-4-06D-1	IR95B-IS115-3-4-06D-1	IR95B-IS115-3-4-06D-2	IR95B-IS116-3-4-06D-1	IR95B-IS116D-3-4-06D-1	IR95B-IS117-3-4-06D-2	IR95B-IS117D-3-4-06D-2	IR95B-IS119-3-4-06D-2	IR95B-IS121-3-4-06D-2	IR95B-IS123-3-4-06D
Sample Date	10/05/06	10/05/06	10/05/06	10/05/06	10/05/06	10/03/06	10/03/06	10/05/06	10/03/06	10/03/06	10/05/06	10/05/06	10/05/06	10/05/06	10/05/06
Chemical Name															
Pesticide/Polychlorinated Biphenyls (UG/KG)															
4,4'-DDD	3.8 U	4 U	4 U	3.8 U	3.8 U	NA	NA	3.8 U	NA	NA	3.8 U	3.8 U	3.8 U	3.9 U	3.9
4,4'-DDE	3.8 U	4 U	4 U	3.8 U	3.8 U	NA	NA	3.8 U	NA	NA	3.8 U	3.8 U	3.8 U	3.9 U	3.9
4,4'-DDT	3.8 U	4 U	4 U	3.8 U	3.8 U	NA	NA	3.8 U	NA	NA	3.8 U	3.8 U	3.8 U	3.9 U	3.9
Aldrin	2 U	2.1 U	2.1 U	1.9 U	1.9 U	NA	NA	2 U	NA	NA	1.9 U	1.9 U	2 U	2 U	2
Aroclor-1016	38 U	40 U	40 U	38 U	38 U	NA	NA	38 U	NA	NA	38 U	38 U	38 U	39 U	39
Aroclor-1221	77 U	81 U	81 U	76 U	77 U	NA	NA	78 U	NA	NA	77 U	77 U	77 U	79 U	79
Aroclor-1232	38 U	40 U	40 U	38 U	38 U	NA	NA	38 U	NA	NA	38 U	38 U	38 U	39 U	39
Aroclor-1242	38 U	40 U	40 U	38 U	38 U	NA	NA	38 U	NA	NA	38 U	38 U	38 U	39 U	39
Aroclor-1248	38 U	40 U	40 U	38 U	38 U	NA	NA	38 U	NA	NA	38 U	38 U	38 U	39 U	39
Aroclor-1254	38 U	40 U	40 U	38 U	38 U	NA	NA	38 U	NA	NA	38 U	38 U	38 U	39 U	39
Aroclor-1260	38 U	40 U	40 U	38 U	38 U	NA	NA	38 U	NA	NA	38 U	38 U	38 U	39 U	39
Dieldrin	3.8 U	4 U	4 U	3.8 U	3.8 U	NA	NA	3.8 U	NA	NA	3.8 U	3.8 U	3.8 U	3.9 U	3.9
Endosulfan I	2 U	2.1 U	2.1 U	1.9 U	1.9 U	NA	NA	2 U	NA	NA	1.9 U	1.9 U	2 U	2 U	2
Endosulfan II	3.8 U	4 U	4 U	3.8 U	3.8 U	NA	NA	3.8 U	NA	NA	3.8 U	3.8 U	3.8 U	3.9 U	3.9
Endosulfan sulfate	3.8 U	4 U	4 U	3.8 U	3.8 U	NA	NA	3.8 U	NA	NA	3.8 U	3.8 U	3.8 U	3.9 U	3.9
Endrin	3.8 U	4 U	4 U	3.8 U	3.8 U	NA	NA	3.8 U	NA	NA	3.8 U	3.8 U	3.8 U	3.9 U	3.9
Endrin aldehyde	3.8 U	4 U	4 U	3.8 U	3.8 U	NA	NA	3.8 U	NA	NA	3.8 U	3.8 U	3.8 U	3.9 U	3.9
Endrin ketone	3.8 U	4 U	4 U	3.8 U	3.8 U	NA	NA	3.8 U	NA	NA	3.8 U	3.8 U	3.8 U	3.9 U	3.9
Heptachlor	2 U	2.1 U	2.1 U	1.9 U	1.9 U	NA	NA	2 U	NA	NA	1.9 U	1.9 U	2 U	2 U	2
Heptachlor epoxide	2 U	2.1 U	2.1 U	1.9 U	1.9 U	NA	NA	2 U	NA	NA	1.9 U	1.9 U	2 U	2 U	2
Methoxychlor	20 U	21 U	21 U	19 U	19 U	NA	NA	20 U	NA	NA	19 U	19 U	20 U	20 U	20
Toxaphene	200 U	210 U	210 U	190 U	190 U	NA	NA	200 U	NA	NA	190 U	190 U	200 U	200 U	200
alpha-BHC	2 U	2.1 U	2.1 U	1.9 U	1.9 U	NA	NA	2 U	NA	NA	1.9 U	1.9 U	2 U	2 U	2
alpha-Chlordane	2 U	2.1 U	2.1 U	1.9 U	1.9 U	NA	NA	2 U	NA	NA	1.9 U	1.9 U	2 U	2 U	2
beta-BHC	2 U	2.1 U	2.1 U	1.9 U	1.9 U	NA	NA	2 U	NA	NA	1.9 U	1.9 U	2 U	2 U	2
delta-BHC	2 U	2.1 U	2.1 U	1.9 U	1.9 U	NA	NA	2 U	NA	NA	1.9 U	1.9 U	2 U	2 U	2
gamma-BHC (Lindane)	2 U	2.1 U	2.1 U	1.9 U	1.9 U	NA	NA	2 U	NA	NA	1.9 U	1.9 U	2 U	2 U	2
gamma-Chlordane	2 U	2.1 U	2.1 U	1.9 U	1.9 U	NA	NA	2 U	NA	NA	1.9 U	1.9 U	2 U	2 U	2
Total Metals (MG/KG)															
Aluminum	12,200	10,400	9,840	10,200 J	10,400 J	NA	NA	10,500 J	NA	NA	7,860 J	8,400 J	8,120 J	11,400 J	11,000
Antimony	0.66 UJ	0.37 UJ	0.24 UJ	0.41 UJ	0.11 UJ	NA	NA	1.2 J	NA	NA	0.14 UJ	0.13 UJ	0.29 UJ	0.29 UJ	0.25
Arsenic	1.7	76.2	45.2	6.7	1 U	NA	NA	436	NA	NA	1.3 U	1.2 U	6.1	5.8	2.6
Barium	13.7 J	16.4 J	19.9	11.5 J	12.6 J	NA	NA	16.9	NA	NA	9.4 J	9.9 J	9.8 J	13.9 J	14.6
Beryllium	0.14 J	0.097 J	0.097 J	0.13 J	0.095 J	NA	NA	0.1 J	NA	NA	0.099 J	0.073 J	0.1 J	0.14 J	0.12
Cadmium	0.42 U	0.44 U	0.43 U	0.32 J	0.029 U	NA	NA	0.063 U	NA	NA	0.4 U	0.39 U	0.39 U	0.41 U	0.39
Calcium	24.2 U	859	888	113 J	141 J	NA	NA	806	NA	NA	514	433	80.4 J	80.1 J	118
Chromium	18.1	14.6	12.3	17 J	11.6 J	NA	NA	11.6 J	NA	NA	5.8 J	5.9 J	13.5 J	20.4 J	15.2
Cobalt	0.55 J	0.37 J	0.33 J	1.1 J	0.6 J	NA	NA	0.69 J	NA	NA	0.37 J	0.39 J	0.94 J-	1.4 J-	0.88
Copper	4 U	7.5	4.4 U	4.8 U	4.4 U	NA	NA	4.3 U	NA	NA	3.9 U	4.3 U	4.7 U	4.9 U	4.5
Iron	4,950	5,750	3,610	7,190 J	2,310 J	NA	NA	3,110 J	NA	NA	1,670 J	1,760 J	7,160 J	11,200 J	5,320
Lead	7.2 J	7.7 J	7.6 J	6.5	6.7	NA	NA	13.2	NA	NA	4.9	4.7	5.2	7.5	6.7
Magnesium	550	457	427 J	399 J	412 J	NA	NA	486 J	NA	NA	259 J	284 J	319 J	444 J	444
Manganese	7.8 J	11.8 J	12.5 J	6.1 J	6.2 J	NA	NA	12.9 J	NA	NA	5.7 J	5.9 J	5.1 J	5.8 J	6.7
Mercury	0.1 U	0.017 J	0.028 J	0.032 U	0.03 U	NA	NA	0.09 U	NA	NA	0.048 U	0.035 U	0.027 U	0.037 U	0.032
Nickel	1.8 J	1.6 J	1.6 J	1.5 J	1.6 J	NA	NA	1.8 J	NA	NA	1.4 J	1.5 J	1.2 J	1.5 J	1.5
Potassium	643 J	409 J	393 J	459 J	358 J	NA	NA	460 J	NA	NA	193 J	202 J	430 J	515 J	461
Selenium	0.76 U	0.36 U	0.43 U	1.7 U	0.36 U	NA	NA	0.46 U	NA	NA	0.11 U	0.45 U	1.4 U	2.5 U	1.1
Silver	0.83 U	0.89 U	0.051 J	0.17 U	0.033 U	NA	NA	0.016 U	NA	NA	0.8 U	0.77 U	0.13 U	0.072 U	0.039
Sodium	37.1 U	41.2 U	41.3 U	32.5 U	27.9 U	NA	NA	33.4 U	NA	NA	38.6 U	41.2 U	36.4 U	35.1 U	37.5
Thallium	1 U	0.14 U	2.2 U	0.54 U	0.26 U	NA	NA	0.095 U	NA	NA	2 U	0.079 U	0.17 U	0.37 U	0.11
Vanadium	24.2	20.2	15.9	25.5	14	NA	NA	15.3	NA	NA	6.8	7.6	20.5	27.8	20.6
Zinc	6.6 U	18.4	21.9	6.1 U	5.7 U	NA	NA	11	NA	NA	4.4 U	4.5 U	5.4 U	6.9 U	7

Notes:
U- Analyte not detected
J- Reported value is estimated
J- - Reported value is biased low
UJ- Analyte not detected. Quantiation limit is imprecise
NA- Not analyzed
Shading represents detection

Site 95 Subsurface Soil Raw Analytical Data
October 2006

Station ID	IR95A-IS100	IR95A-IS101			IR95A-IS102	IR95A-IS103	IR95A-IS115	IR95A-IS117	IR95A-IS119		IR95A-IS121	IR95A-IS123	IR95B-IS101	IR95B-IS103	IR95B-IS105
Sample ID	IR95A-IS100-3-4-06D-1	IR95A-IS101-3-4-06D-1	IR95A-IS101-3-4-06D-2	IR95A-IS101D-3-4-06D-2	IR95A-IS102-3-4-06D-1	IR95A-IS103-3-4-06D-2	IR95A-IS115-3-4-06D-2	IR95A-IS117-3-4-06D-2	IR95A-IS119-3-4-06D-2	IR95A-IS119D-3-4-06D-2	IR95A-IS121-3-4-06D-2	IR95A-IS123-3-4-06D-2	IR95B-IS101-3-4-06D-2	IR95B-IS103-3-4-06D-2	IR95B-IS105-3-4-06D-2
Sample Date	10/03/06	10/03/06	10/04/06	10/04/06	10/03/06	10/04/06	10/04/06	10/04/06	10/04/06	10/04/06	10/04/06	10/04/06	10/05/06	10/05/06	10/05/06
Chemical Name															
Pesticide/Polychlorinated Biphenyls (UG/KG)															
4,4'-DDD	NA	NA	3.6 U	3.9 U	NA	3.7 U	3.7 U	4.2 U	3.4 U	3.5 U	3.9 U	3.7 U	3.9 U	3.9 U	3.8 U
4,4'-DDE	NA	NA	3.6 U	2.5 J	NA	2.6 J	3.7 U	4.2 U	3.4 U	3.5 U	3.9 U	3.7 U	3.9 U	3.9 U	3.8 U
4,4'-DDT	NA	NA	3.6 U	3.9 U	NA	3.7 U	3.7 U	4.2 U	3.4 U	3.5 U	3.9 U	3.7 U	3.9 U	3.9 U	3.8 U
Aldrin	NA	NA	1.9 U	2 U	NA	1.9 U	1.9 U	2.2 U	1.8 U	1.8 U	2 U	1.9 U	2 U	2 U	2 U
Aroclor-1016	NA	NA	36 U	39 U	NA	37 U	37 U	42 U	34 U	35 U	39 U	37 U	39 U	39 U	38 U
Aroclor-1221	NA	NA	73 U	79 U	NA	75 U	76 U	86 U	70 U	71 U	80 U	75 U	79 U	79 U	77 U
Aroclor-1232	NA	NA	36 U	39 U	NA	37 U	37 U	42 U	34 U	35 U	39 U	37 U	39 U	39 U	38 U
Aroclor-1242	NA	NA	36 U	39 U	NA	37 U	37 U	42 U	34 U	35 U	39 U	37 U	39 U	39 U	38 U
Aroclor-1248	NA	NA	36 U	39 U	NA	37 U	37 U	42 U	34 U	35 U	39 U	37 U	39 U	39 U	38 U
Aroclor-1254	NA	NA	36 U	39 U	NA	37 U	37 U	42 U	34 U	35 U	39 U	37 U	39 U	39 U	38 U
Aroclor-1260	NA	NA	36 U	39 U	NA	37 U	37 U	42 U	34 U	35 U	39 U	37 U	39 U	39 U	38 U
Dieldrin	NA	NA	3.6 U	3.9 U	NA	3.7 U	3.7 U	4.2 U	3.4 U	3.5 U	3.9 U	3.7 U	3.9 U	3.9 U	3.8 U
Endosulfan I	NA	NA	1.9 U	2 U	NA	1.9 U	1.9 U	2.2 U	1.8 U	1.8 U	2 U	1.9 U	2 U	2 U	2 U
Endosulfan II	NA	NA	3.6 U	3.9 U	NA	3.7 U	3.7 U	4.2 U	3.4 U	3.5 U	3.9 U	3.7 U	3.9 U	3.9 U	3.8 U
Endosulfan sulfate	NA	NA	3.6 U	3.9 U	NA	3.7 U	3.7 U	4.2 U	3.4 U	3.5 U	3.9 U	3.7 U	3.9 U	3.9 U	3.8 U
Endrin	NA	NA	3.6 U	3.9 U	NA	3.7 U	3.7 U	4.2 U	3.4 U	3.5 U	3.9 U	3.7 U	3.9 U	3.9 U	3.8 U
Endrin aldehyde	NA	NA	3.6 U	3.9 U	NA	3.7 U	3.7 U	4.2 U	3.4 U	3.5 U	3.9 U	3.7 U	3.9 U	3.9 U	3.8 U
Endrin ketone	NA	NA	3.6 U	3.9 U	NA	3.7 U	3.7 U	4.2 U	3.4 U	3.5 U	3.9 U	3.7 U	3.9 U	3.9 U	3.8 U
Heptachlor	NA	NA	1.9 U	2 U	NA	1.9 U	1.9 U	2.2 U	1.8 U	1.8 U	2 U	1.9 U	2 U	2 U	2 U
Heptachlor epoxide	NA	NA	1.9 U	2 U	NA	1.9 U	1.9 U	2.2 U	1.8 U	1.8 U	2 U	1.9 U	2 U	2 U	2 U
Methoxychlor	NA	NA	19 U	20 U	NA	19 U	19 U	22 U	18 U	18 U	20 U	19 U	20 U	20 U	20 U
Toxaphene	NA	NA	190 U	200 U	NA	190 U	190 U	220 U	180 U	180 U	200 U	190 U	200 U	200 U	200 U
alpha-BHC	NA	NA	1.9 U	2 U	NA	1.9 U	1.9 U	2.2 U	1.8 U	1.8 U	2 U	1.9 U	2 U	2 U	2 U
alpha-Chlordane	NA	NA	1.9 U	2 U	NA	1.9 U	1.9 U	2.2 U	1.8 U	1.8 U	2 U	1.9 U	2 U	2 U	2 U
beta-BHC	NA	NA	1.9 U	2 U	NA	1.9 U	1.9 U	2.2 U	1.8 U	1.8 U	2 U	1.9 U	2 U	2 U	2 U
delta-BHC	NA	NA	1.9 U	2 U	NA	1.9 U	1.9 U	2.2 U	1.8 U	1.8 U	2 U	1.9 U	2 U	2 U	2 U
gamma-BHC (Lindane)	NA	NA	1.9 U	2 U	NA	1.9 U	1.9 U	2.2 U	1.8 U	1.8 U	2 U	1.9 U	2 U	2 U	2 U
gamma-Chlordane	NA	NA	1.9 U	2 U	NA	1.9 U	1.9 U	2.2 U	1.8 U	1.8 U	2 U	1.9 U	2 U	2 U	2 U
Total Metals (MG/KG)															
Aluminum	NA	NA	1,610	1,240	NA	4,790	1,390	1,930	481	732	7,870	4,730	12,900 J	13,200	10,200
Antimony	NA	NA	4.7 UJ	0.085 UJ	NA	0.27 UJ	0.099 UJ	5.4 UJ	0.053 UJ	0.059 UJ	0.14 UJ	0.29 UJ	0.39 UJ	0.56 UJ	0.61 UJ
Arsenic	NA	NA	0.14 J-	0.14 J-	NA	0.51 J-	0.19 J	0.83 J	0.14 J	0.24 J	1.3 J-	0.19 J-	3.6 J-	4.7	2
Barium	NA	NA	5.9 J	4.8 J	NA	9.9 J	5.5 J	4.5 J	1.9 J	2.2 J	13.2 J	7 J	13.1 J	16.3	11.9 J
Beryllium	NA	NA	0.027 J	0.03 J	NA	0.075 J	0.03 J	0.039 J	0.019 J	0.021 J	0.094 J	0.067 J	0.13 J	0.16 J	0.13 J
Cadmium	NA	NA	0.38 U	0.42 U	NA	0.38 U	0.4 U	0.45 U	0.35 U	0.36 U	0.43 U	0.38 U	0.41 UJ	0.42 U	0.42 U
Calcium	NA	NA	186 J	126 J	NA	187 J	105 J	51.6 J	44.9 J	66.6 J	308 J	199 J	410 UJ	284 J	742
Chromium	NA	NA	1.8	2.3	NA	7	2.1	3.6	1.6	1.8	9.6	5.3	18.5 J	20.9	15.1
Cobalt	NA	NA	0.13 U	0.16 U	NA	0.3 J	0.19 J	0.2 J	0.075 J	0.082 J	0.58 J	0.28 J	0.45 J	0.58 J	0.45 J
Copper	NA	NA	3.2 U	3.2 U	NA	3.1 U	2.9 U	3.1 U	2.3 U	2.5 U	5.3 U	3.5 U	4.1 U	4.4 U	3.9 U
Iron	NA	NA	996	561	NA	1,910	575	1,480	286	331	3,370	1,030	6,570 J	6,690	3,890
Lead	NA	NA	2.2	2.3	NA	7	2.4	2.9	1.7	2.3	3.6	2.3	7.8 J	7.9 J	6.4 J
Magnesium	NA	NA	51.2 J	54.9 J	NA	150 J	61.8 J	79.4 J	22.7 J	28.3 J	264 J	141 J	584 J	565	562
Manganese	NA	NA	15.8 J	4.4 J	NA	14.5 J	4.4	3.8	1.8	1.8	6.8 J	3.4 J	8.6 J	7.7 J	6.9 J
Mercury	NA	NA	0.1 U	0.099 U	NA	0.094 U	0.094 U	0.11 U	0.086 U	0.097 U	0.099 U	0.09 U	0.098 U	0.11 U	0.093 U
Nickel	NA	NA	0.61 J	0.55 J	NA	1.8 J	0.46 J	0.53 J	0.2 U	0.22 U	2.3 J	0.83 J	1.9 J	1.9 J	1.5 J
Potassium	NA	NA	59.1 U	66.8 U	NA	144 J	61.6 U	101 J	44.9 U	49.1 U	342 J	254 J	747 J	621 J	563 J
Selenium	NA	NA	0.41 U	0.51 U	NA	0.55 U	0.3 U	0.54 U	0.25 U	0.33 U	1.3 U	0.6 U	0.27 U	0.66 U	0.71 U
Silver	NA	NA	0.78 U	0.82 U	NA	0.034 J	0.8 U	0.88 U	0.71 U	0.72 U	0.022 J	0.76 U	0.82 U	0.84 U	0.03 J
Sodium	NA	NA	31.3 U	35.5 J	NA	26.4 U	14 U	17.6 U	9.1 U	9.8 U	24.8 U	22.7 U	163 J	40.6 U	35.9 U
Thallium	NA	NA	0.2 U	0.13 U	NA	0.32 U	0.16 U	0.22 U	0.1 U	0.12 U	0.61 U	0.33 U	0.21 U	0.61 U	0.92 U
Vanadium	NA	NA	2.8 J	2.4 J	NA	6.8	2.2 J	7	2.1 J	2.1 J	11.8	5.6	25.6 J	29.7	19.9
Zinc	NA	NA	2.4 U	3.2 U	NA	12.3	3.1 U	2.3 U	1.8 U	2.3 U	4.8 U	3.9 U	6.9 U	7.5 U	5.6 U

Notes:
U- Analyte not detected
J- Reported value is estimated
J- - Reported value is biased low
UJ- Analyte not detected. Quantiation limit is imprecise
NA- Not analyzed
Shading represents detection

Site 95 Subsurface Soil Raw Analytical Data
October 2006

Station ID		IR95C-IS115	IR95C-IS117	IR95C-IS119	IR95C-IS121	IR95C-IS123		IR95C-IS125	IR95C-IS127
Sample ID	2	IR95C-IS115-3-4-06D-2	IR95C-IS117-3-4-06D-2	IR95C-IS119-3-4-06D-2	IR95C-IS121-3-4-06D-2	IR95C-IS123-3-4-06D-2	IR95C-IS123D-3-4-06D-2	IR95C-IS125-3-4-06D-2	IR95C-IS127-3-4-06D-2
Sample Date		10/03/06	10/03/06	10/03/06	10/03/06	10/03/06	10/03/06	10/03/06	10/03/06
Chemical Name									
Semi-volatile Organic Compounds (UG/KG)									
1,1-Biphenyl	U	380 U	380 U	360 U	360 U	370 U	380 U	360 U	380 U
2,2'-Oxybis(1-chloropropane)	U	380 U	380 U	360 U	360 U	370 U	380 U	360 U	380 U
2,4,5-Trichlorophenol	U	970 U	960 U	890 U	910 U	940 U	950 U	920 U	970 U
2,4,6-Trichlorophenol	U	380 U	380 U	360 U	360 U	370 U	380 U	360 U	380 U
2,4-Dichlorophenol	U	380 U	380 U	360 U	360 U	370 U	380 U	360 U	380 U
2,4-Dimethylphenol	U	380 U	380 U	360 U	360 UJ	370 UJ	380 UJ	360 UJ	380 UJ
2,4-Dinitrophenol	UJ	970 UJ	960 UJ	890 UJ	910 R	940 R	950 R	920 R	970 R
2,4-Dinitrotoluene	U	380 U	380 U	360 U	360 U	370 U	380 U	360 U	380 U
2,6-Dinitrotoluene	U	380 U	380 U	360 U	360 U	370 U	380 U	360 U	380 U
2-Chloronaphthalene	U	380 U	380 U	360 U	360 U	370 U	380 U	360 U	380 U
2-Chlorophenol	U	380 U	380 U	360 U	360 U	370 U	380 U	360 U	380 U
2-Methylnaphthalene	U	380 U	380 U	360 U	360 UJ	370 U	380 U	360 U	380 U
2-Methylphenol	U	380 U	380 U	360 U	360 U	370 U	380 U	360 U	380 U
2-Nitroaniline	U	970 U	960 U	890 U	910 U	940 U	950 U	920 U	970 U
2-Nitrophenol	U	380 U	380 U	360 U	360 U	370 U	380 U	360 U	380 U
3,3'-Dichlorobenzidine	UJ	380 U	380 U	360 U	360 UJ	370 UJ	380 UJ	360 UJ	380 U
3-Nitroaniline	U	970 U	960 U	890 U	910 U	940 U	950 U	920 U	970 U
4,6-Dinitro-2-methylphenol	U	970 UJ	960 UJ	890 UJ	910 UJ	940 UJ	950 UJ	920 UJ	970 UJ
4-Bromophenyl-phenylether	U	380 U	380 U	360 U	360 U	370 U	380 U	360 U	380 U
4-Chloro-3-methylphenol	U	380 U	380 U	360 U	360 U	370 U	380 U	360 U	380 U
4-Chloroaniline	UJ	380 UJ	380 UJ	360 UJ	360 UJ	370 UJ	380 UJ	360 UJ	380 UJ
4-Chlorophenyl-phenylether	U	380 U	380 U	360 U	360 U	370 U	380 U	360 U	380 U
4-Methylphenol	U	380 U	380 U	360 U	360 U	370 U	380 U	360 U	380 U
4-Nitroaniline	UJ	970 U	960 U	890 U	910 U	940 U	950 U	920 U	970 U
4-Nitrophenol	UJ	970 U	960 U	890 U	910 U	940 U	950 U	920 U	970 U
Acenaphthene	U	380 U	380 U	360 U	360 U	370 U	380 U	360 U	380 U
Acenaphthylene	U	380 U	380 U	360 U	360 U	370 U	380 U	360 U	380 U
Acetophenone	U	380 U	380 U	360 U	360 U	370 U	380 U	360 U	380 U
Anthracene	U	380 U	380 U	360 U	360 U	370 U	380 U	360 U	380 U
Atrazine	UJ	380 U	380 U	360 U	360 U	370 U	380 U	360 U	380 U
Benzaldehyde	U	380 UJ	380 UJ	360 UJ	360 U	370 U	380 U	360 U	380 U
Benzo(a)anthracene	U	380 U	380 U	360 U	360 U	370 U	380 U	360 U	380 U
Benzo(a)pyrene	U	380 U	380 U	360 U	360 U	370 U	380 U	360 U	380 U
Benzo(b)fluoranthene	U	380 U	380 U	360 U	360 U	370 U	380 U	360 U	380 U
Benzo(g,h,i)perylene	U	380 U	380 U	360 U	360 U	370 U	380 U	360 U	380 U
Benzo(k)fluoranthene	U	380 U	380 U	360 U	360 U	370 U	380 U	360 U	380 U
Butylbenzylphthalate	U	380 U	380 U	360 U	360 U	370 U	380 U	360 U	380 U
Caprolactam	U	380 UJ	380 UJ	360 UJ	360 UJ	370 UJ	380 UJ	360 UJ	380 UJ
Carbazole	U	380 U	380 U	360 U	360 U	370 U	380 U	360 U	380 U
Chrysene	U	380 U	380 U	360 U	360 U	370 U	380 U	360 U	380 U
Di-n-butylphthalate	U	56 J	380 U	360 U	360 U	370 U	380 U	360 U	380 U
Di-n-octylphthalate	U	380 UJ	380 UJ	360 UJ	360 U	370 U	380 U	360 U	380 UJ
Dibenz(a,h)anthracene	U	380 U	380 U	360 U	360 U	370 U	380 U	360 U	380 U
Dibenzofuran	U	380 U	380 U	360 U	360 U	370 U	380 U	360 U	380 U
Diethylphthalate	U	380 U	380 U	360 U	360 U	370 U	380 U	360 U	380 U
Dimethyl phthalate	U	380 U	380 U	360 U	360 U	370 U	380 U	360 U	380 U
Fluoranthene	U	380 U	380 U	360 U	360 U	370 U	380 U	360 U	380 U
Fluorene	U	380 U	380 U	360 U	360 U	370 U	380 U	360 U	380 U
Hexachlorobenzene	U	380 U	380 U	360 U	360 U	370 U	380 U	360 U	380 U
Hexachlorobutadiene	U	380 U	380 U	360 U	360 U	370 U	380 U	360 U	380 U
Hexachlorocyclopentadiene	UJ	380 UJ	380 UJ	360 UJ	360 U	370 UJ	380 UJ	360 UJ	380 UJ
Hexachloroethane	U	380 U	380 U	360 U	360 U	370 U	380 U	360 U	380 U
Indeno(1,2,3-cd)pyrene	U	380 U	380 U	360 U	360 U	370 U	380 U	360 U	380 U
Isophorone	U	380 U	380 U	360 U	360 U	370 U	380 U	360 U	380 U
Naphthalene	U	380 U	380 U	360 U	360 U	370 U	380 U	360 U	380 U
Nitrobenzene	U	380 U	380 U	360 U	360 U	370 U	380 U	360 U	380 U
Pentachlorophenol	U	970 UJ	960 UJ	890 UJ	910 UJ	940 UJ	950 UJ	920 UJ	970 UJ
Phenanthrene	U	380 U	380 U	360 U	360 U	370 U	380 U	360 U	380 U
Phenol	U	380 U	380 U	360 U	360 U	370 U	380 U	360 U	380 U
Pyrene	U	380 U	380 U	360 U	360 U	370 U	380 U	360 U	380 U
bis(2-Chloroethoxy)methane	U	380 U	380 U	360 U	360 U	370 U	380 U	360 U	380 U
bis(2-Chloroethyl)ether	U	380 U	380 U	360 U	360 U	370 U	380 U	360 U	380 U
bis(2-Ethylhexyl)phthalate	J	120 U	83 J	91 J	100 J	96 J	100 J	96 J	91 J
n-Nitroso-di-n-propylamine	U	380 U	380 U	360 U	360 U	370 U	380 U	360 U	380 U
n-Nitrosodiphenylamine	U	380 U	380 U	360 U	360 U	370 U	380 U	360 U	380 U

Station ID		IR95B-IS125	IR95B-IS127		IR95B-IS129	IR95C-IS100	IR95C-IS101		IR95C-IS102	IR95C-IS103	IR95C-IS105	IR95C-IS107	IR95C-IS109	IR95C-IS111	IR95C-IS113	
Sample ID	2	IR95B-IS125-3-4-06D-2	IR95B-IS127-3-4-06D-2	IR95B-IS127D-3-4-06D-2	IR95B-IS129-3-4-06D-2	IR95C-IS100-3-4-06D-1	IR95C-IS101-3-4-06D-1	IR95C-IS101-3-4-06D-2	IR95C-IS102-3-4-06D-1	IR95C-IS103-3-4-06D-2	IR95C-IS105-3-4-06D-2	IR95C-IS107-3-4-06D-2	IR95C-IS109-3-4-06D-2	IR95C-IS111-3-4-06D-2	IR95C-IS113-3-4-06D-2	IR95C-IS113D-3-4-06D
Sample Date		10/05/06	10/05/06	10/05/06	10/05/06	10/03/06	10/03/06	10/03/06	10/03/06	10/03/06	10/03/06	10/03/06	10/03/06	10/03/06	10/03/06	10/03/06
Chemical Name																
Semi-volatile Organic Compounds (UG/KG)																
1,1-Biphenyl	U	380 U	380 U	390 U	380 U	NA	NA	380 U	NA	360 U	370 U	360 U	370 U	380 U	360 U	360
2,2'-Oxybis(1-chloropropane)	U	380 U	380 U	390 U	380 U	NA	NA	380 U	NA	360 U	370 U	360 U	370 U	380 U	360 U	360
2,4,5-Trichlorophenol	U	940 U	960 U	970 U	940 U	NA	NA	940 U	NA	910 U	930 U	900 U	930 U	940 U	900 U	900
2,4,6-Trichlorophenol	U	380 U	380 U	390 U	380 U	NA	NA	380 U	NA	360 U	370 U	360 U	370 U	380 U	360 U	360
2,4-Dichlorophenol	U	380 U	380 U	390 U	380 U	NA	NA	380 U	NA	360 U	370 U	360 U	370 U	380 U	360 U	360
2,4-Dimethylphenol	U	380 U	380 U	390 U	380 U	NA	NA	380 U	NA	360 U	370 U	360 U	370 U	380 UJ	360 U	360
2,4-Dinitrophenol	R	940 UJ	960 R	970 R	940 R	NA	NA	940 UJ	NA	910 UJ	930 UJ	900 UJ	930 UJ	940 R	900 UJ	900
2,4-Dinitrotoluene	U	380 U	380 U	390 U	380 U	NA	NA	380 U	NA	360 U	370 U	360 U	370 U	380 U	360 U	360
2,6-Dinitrotoluene	U	380 U	380 U	390 U	380 U	NA	NA	380 U	NA	360 U	370 U	360 U	370 U	380 U	360 U	360
2-Chloronaphthalene	U	380 U	380 U	390 U	380 U	NA	NA	380 U	NA	360 U	370 U	360 U	370 U	380 U	360 U	360
2-Chlorophenol	U	380 U	380 U	390 U	380 U	NA	NA	380 U	NA	360 U	370 U	360 U	370 U	380 U	360 U	360
2-Methylnaphthalene	U	380 U	380 U	390 U	380 U	NA	NA	380 U	NA	360 U	370 U	360 U	370 U	380 U	360 U	360
2-Methylphenol	U	380 U	380 U	390 U	380 U	NA	NA	380 U	NA	360 U	370 U	360 U	370 U	380 U	360 U	360
2-Nitroaniline	U	940 U	960 U	970 U	940 U	NA	NA	940 U	NA	910 U	930 U	900 U	930 U	940 U	900 U	900
2-Nitrophenol	U	380 U	380 U	390 U	380 U	NA	NA	380 U	NA	360 U	370 U	360 U	370 U	380 U	360 U	360
3,3'-Dichlorobenzidine	U	380 UJ	380 U	390 UJ	380 U	NA	NA	380 UJ	NA	360 UJ	370 UJ	360 UJ	370 UJ	380 U	360 UJ	360
3-Nitroaniline	U	940 U	960 U	970 U	940 U	NA	NA	940 U	NA	910 U	930 U	900 U	930 U	940 U	900 U	900
4,6-Dinitro-2-methylphenol	UJ	940 U	960 UJ	970 UJ	940 UJ	NA	NA	940 U	NA	910 U	930 U	900 U	930 U	940 UJ	900 U	900
4-Bromophenyl-phenylether	U	380 U	380 U	390 U	380 U	NA	NA	380 U	NA	360 U	370 U	360 U	370 U	380 U	360 U	360
4-Chloro-3-methylphenol	U	380 U	380 U	390 U	380 U	NA	NA	380 U	NA	360 U	370 U	360 U	370 U	380 U	360 U	360
4-Chloroaniline	U	380 U	380 U	390 U	380 U	NA	NA	380 UJ	NA	360 UJ	370 UJ	360 UJ	370 UJ	380 UJ	360 UJ	360
4-Chlorophenyl-phenylether	U	380 U	380 U	390 U	380 U	NA	NA	380 U	NA	360 U	370 U	360 U	370 U	380 U	360 U	360
4-Methylphenol	U	380 U	380 U	390 U	380 U	NA	NA	380 U	NA	360 U	370 U	360 U	370 U	380 U	360 U	360
4-Nitroaniline	U	940 U	960 U	970 UJ	940 U	NA	NA	940 UJ	NA	910 UJ	930 UJ	900 UJ	930 UJ	940 U	900 UJ	900
4-Nitrophenol	U	940 UJ	960 U	970 UJ	940 U	NA	NA	940 UJ	NA	910 UJ	930 UJ	900 UJ	930 UJ	940 U	900 UJ	900
Acenaphthene	U	380 U	380 U	390 U	380 U	NA	NA	380 U	NA	360 U	370 U	360 U	370 U	380 U	360 U	360
Acenaphthylene	U	380 U	380 U	390 U	380 U	NA	NA	380 U	NA	360 U	370 U	360 U	370 U	380 U	360 U	360
Acetophenone	U	380 U	380 U	390 U	380 U	NA	NA	380 U	NA	360 U	370 U	360 U	370 U	380 U	360 U	360
Anthracene	U	380 U	380 U	390 U	380 U	NA	NA	380 U	NA	360 U	370 U	360 U	370 U	380 U	360 U	360
Atrazine	U	380 UJ	380 U	390 U	380 U	NA	NA	380 UJ	NA	360 UJ	370 UJ	360 UJ	370 UJ	380 U	360 UJ	360
Benzaldehyde	U	380 U	380 U	390 U	380 U	NA	NA	380 U	NA	360 U	370 U	360 U	370 U	380 U	360 U	360
Benzo(a)anthracene	U	380 U	380 U	390 U	380 U	NA	NA	380 U	NA	360 U	370 U	360 U	370 U	380 U	360 U	360
Benzo(a)pyrene	U	380 U	380 U	390 U	380 U	NA	NA	380 U	NA	360 U	370 U	360 U	370 U	380 U	360 U	360
Benzo(b)fluoranthene	U	380 U	380 U	390 U	380 U	NA	NA	380 U	NA	360 U	370 U	360 U	370 U	380 U	360 U	360
Benzo(g,h,i)perylene	U	380 U	380 U	390 U	380 U	NA	NA	380 U	NA	360 U	370 U	360 U	370 U	380 U	360 U	360
Benzo(k)fluoranthene	U	380 U	380 U	390 U	380 U	NA	NA	380 U	NA	360 U	370 U	360 U	370 U	380 U	360 U	360
Butylbenzylphthalate	U	380 U	380 U	390 U	380 U	NA	NA	380 U	NA	360 U	370 U	360 U	370 U	380 U	360 U	360
Caprolactam	U	380 U	380 U	390 U	380 U	NA	NA	380 U	NA	360 U	370 U	360 U	370 U	380 UJ	360 U	360
Carbazole	U	380 U	380 U	390 U	380 U	NA	NA	380 U	NA	360 U	370 U	360 U	370 U	380 U	360 U	360
Chrysene	U	380 U	380 U	390 U	380 U	NA	NA	380 U	NA	360 U	370 U	360 U	370 U	380 U	360 U	360
Di-n-butylphthalate	U	62 J	380 U	54 J	43 J	NA	NA	380 U	NA	360 U	370 U	360 U	370 U	380 U	360 U	360
Di-n-octylphthalate	U	380 U	380 U	390 U	380 U	NA	NA	380 U	NA	360 U	370 U	360 U	370 U	380 UJ	360 U	360
Dibenz(a,h)anthracene	U	380 U	380 U	390 U	380 U	NA	NA	380 U	NA	360 U	370 U	360 U	370 U	380 U	360 U	360
Dibenzofuran	U	380 U	380 U	390 U	380 U	NA	NA	380 U	NA	360 U	370 U	360 U	370 U	380 U	360 U	360
Diethylphthalate	U	380 U	380 U	390 U	380 U	NA	NA	380 U	NA	360 U	370 U	360 U	370 U	380 U	360 U	360
Dimethyl phthalate	U	380 U	380 U	390 U	380 U	NA	NA	380 U	NA	360 U	370 U	360 U	370 U	380 U	360 U	360
Fluoranthene	U	380 U	380 U	390 U	380 U	NA	NA	380 U	NA	360 U	370 U	360 U	370 U	380 U	360 U	360
Fluorene	U	380 U	380 U	390 U	380 U	NA	NA	380 U	NA	360 U	370 U	360 U	370 U	380 U	360 U	360
Hexachlorobenzene	U	380 U	380 U	390 U	380 U	NA	NA	380 U	NA	360 U	370 U	360 U	370 U	380 U	360 U	360
Hexachlorobutadiene	U	380 U	380 U	390 U	380 U	NA	NA	380 U	NA	360 U	370 U	360 U	370 U	380 U	360 U	360
Hexachlorocyclopentadiene	U	380 UJ	380 U	390 R	380 U	NA	NA	380 UJ	NA	360 UJ	370 UJ	360 UJ	370 UJ	380 UJ	360 UJ	360
Hexachloroethane	U	380 U	380 U	390 U	380 U	NA	NA	380 U	NA	360 U	370 U	360 U	370 U	380 U	360 U	360
Indeno(1,2,3-cd)pyrene	U	380 U	380 U	390 U	380 U	NA	NA	380 U	NA	360 U	370 U	360 U	370 U	380 U	360 U	360
Isophorone	U	380 U	380 U	390 U	380 U	NA	NA	380 U	NA	360 U	370 U	360 U	370 U	380 U	360 U	360
Naphthalene	U	380 U	380 U	390 U	380 U	NA	NA	380 U	NA	360 U	370 U	360 U	370 U	380 U	360 U	360
Nitrobenzene	U	380 U	380 U	390 U	380 U	NA	NA	380 U	NA	360 U	370 U	360 U	370 U	380 U	360 U	360
Pentachlorophenol	U	940 U	960 U	970 U	940 U	NA	NA	940 U	NA	910 U	930 U	900 U	930 U	940 UJ	900 U	900
Phenanthrene	U	380 U	380 U	390 U	380 U	NA	NA	380 U	NA	360 U	370 U	360 U	370 U	380 U	360 U	360
Phenol	U	380 U	380 U	390 U	380 U	NA	NA	380 U	NA	360 U	370 U	360 U	370 U	380 U	360 U	360
Pyrene	U	380 U	380 U	390 U	380 U	NA	NA	380 U	NA	360 U	370 U	360 U	370 U	380 U	360 U	360
bis(2-Chloroethoxy)methane	U	380 U	380 U	390 U	380 U	NA	NA	380 U	NA	360 U	370 U	360 U	370 U	380 U	360 U	360
bis(2-Chloroethyl)ether	U	380 U	380 U	390 U	380 U	NA	NA	380 U	NA	360 U	370 U	360 U	370 U	380 U	360 U	360
bis(2-Ethylhexyl)phthalate	U	200 U	120 U	420	110 U	NA	NA	50 J	NA	44 J	57 J	39 J	44 J	99 J	43 J	39
n-Nitroso-di-n-propylamine	U	380 U	380 U	390 U	380 U	NA	NA	380 U	NA	360 U	370 U	360 U	370 U	380 U	360 U	360
n-Nitrosodiphenylamine	U	380 U	380 U	390 U	380 U	NA	NA	380 U	NA	360 U	370 U	360 U	370 U	380 U	360 U	360

Station ID	IR95B-IS107	IR95B-IS109		IR95B-IS111	IR95B-IS113	IR95B-IS114	IR95B-IS115		IR95B-IS116		IR95B-IS117		IR95B-IS119	IR95B-IS121	IR95B-IS123
Sample ID	IR95B-IS107-3-4-06D-2	IR95B-IS109-3-4-06D-2	IR95B-IS109D-3-4-06D-2	IR95B-IS111-3-4-06D-2	IR95B-IS113-3-4-06D-2	IR95B-IS114-3-4-06D-1	IR95B-IS115-3-4-06D-1	IR95B-IS115-3-4-06D-2	IR95B-IS116-3-4-06D-1	IR95B-IS116D-3-4-06D-1	IR95B-IS117-3-4-06D-2	IR95B-IS117D-3-4-06D-2	IR95B-IS119-3-4-06D-2	IR95B-IS121-3-4-06D-2	IR95B-IS123-3-4-06D
Sample Date	10/05/06	10/05/06	10/05/06	10/05/06	10/05/06	10/03/06	10/03/06	10/05/06	10/03/06	10/03/06	10/05/06	10/05/06	10/05/06	10/05/06	10/05/06
Chemical Name															
Semi-volatile Organic Compounds (UG/KG)															
1,1-Biphenyl	380 U	400 U	400 U	380 U	380 U	NA	NA	380 U	NA	NA	380 U	380 U	380 U	390 U	390
2,2'-Oxybis(1-chloropropane)	380 U	400 U	400 U	380 U	380 U	NA	NA	380 U	NA	NA	380 U	380 U	380 U	390 U	390
2,4,5-Trichlorophenol	970 U	1,000 U	1,000 U	950 U	950 U	NA	NA	960 U	NA	NA	940 U	950 U	940 U	970 U	980
2,4,6-Trichlorophenol	380 U	400 U	400 U	380 U	380 U	NA	NA	380 U	NA	NA	380 U	380 U	380 U	390 U	390
2,4-Dichlorophenol	380 U	400 U	400 U	380 U	380 U	NA	NA	380 U	NA	NA	380 U	380 U	380 U	390 U	390
2,4-Dimethylphenol	380 U	400 U	400 U	380 U	380 U	NA	NA	380 U	NA	NA	380 U	380 U	380 U	390 U	390
2,4-Dinitrophenol	970 R	1,000 UJ	1,000 UJ	950 R	950 R	NA	NA	960 R	NA	NA	940 R	950 R	940 R	970 R	980
2,4-Dinitrotoluene	380 U	400 U	400 U	380 U	380 U	NA	NA	380 U	NA	NA	380 U	380 U	380 U	390 U	390
2,6-Dinitrotoluene	380 U	400 U	400 U	380 U	380 U	NA	NA	380 U	NA	NA	380 U	380 U	380 U	390 U	390
2-Chloronaphthalene	380 U	400 U	400 U	380 U	380 U	NA	NA	380 U	NA	NA	380 U	380 U	380 U	390 U	390
2-Chlorophenol	380 U	400 U	400 U	380 U	380 U	NA	NA	380 U	NA	NA	380 U	380 U	380 U	390 U	390
2-Methylnaphthalene	380 U	400 U	400 U	380 U	380 U	NA	NA	380 U	NA	NA	380 U	380 U	380 U	390 U	390
2-Methylphenol	380 U	400 U	400 U	380 U	380 U	NA	NA	380 U	NA	NA	380 U	380 U	380 U	390 U	390
2-Nitroaniline	970 U	1,000 U	1,000 U	950 U	950 U	NA	NA	960 U	NA	NA	940 U	950 U	940 U	970 U	980
2-Nitrophenol	380 U	400 U	400 U	380 U	380 U	NA	NA	380 U	NA	NA	380 U	380 U	380 U	390 U	390
3,3'-Dichlorobenzidine	380 U	400 U	400 U	380 U	380 U	NA	NA	380 U	NA	NA	380 U	380 U	380 U	390 U	390
3-Nitroaniline	970 U	1,000 U	1,000 U	950 U	950 U	NA	NA	960 U	NA	NA	940 U	950 U	940 U	970 U	980
4,6-Dinitro-2-methylphenol	970 UJ	1,000 U	1,000 U	950 U	950 U	NA	NA	960 U	NA	NA	940 U	950 UJ	940 UJ	970 UJ	980
4-Bromophenyl-phenylether	380 U	400 U	400 U	380 U	380 U	NA	NA	380 U	NA	NA	380 U	380 U	380 U	390 U	390
4-Chloro-3-methylphenol	380 U	400 U	400 U	380 U	380 U	NA	NA	380 U	NA	NA	380 U	380 U	380 U	390 U	390
4-Chloroaniline	380 U	400 U	400 U	380 U	380 U	NA	NA	380 U	NA	NA	380 U	380 U	380 U	390 U	390
4-Chlorophenyl-phenylether	380 U	400 U	400 U	380 U	380 U	NA	NA	380 U	NA	NA	380 U	380 U	380 U	390 U	390
4-Methylphenol	380 U	400 U	400 U	380 U	380 U	NA	NA	380 U	NA	NA	380 U	380 U	380 U	390 U	390
4-Nitroaniline	970 U	1,000 UJ	1,000 UJ	950 U	950 U	NA	NA	960 U	NA	NA	940 U	950 U	940 U	970 U	980
4-Nitrophenol	970 U	1,000 U	1,000 U	950 U	950 U	NA	NA	960 U	NA	NA	940 U	950 U	940 U	970 U	980
Acenaphthene	380 U	400 U	400 U	380 U	380 U	NA	NA	380 U	NA	NA	380 U	380 U	380 U	390 U	390
Acenaphthylene	380 U	400 U	400 U	380 U	380 U	NA	NA	380 U	NA	NA	380 U	380 U	380 U	390 U	390
Acetophenone	380 U	400 U	400 U	380 U	380 U	NA	NA	380 U	NA	NA	380 U	380 U	380 U	390 U	390
Anthracene	380 U	400 U	400 U	380 U	380 U	NA	NA	380 U	NA	NA	380 U	380 U	380 U	390 U	390
Atrazine	380 U	400 U	400 U	380 U	380 U	NA	NA	380 U	NA	NA	380 U	380 U	380 U	390 U	390
Benzaldehyde	380 U	400 UJ	400 UJ	380 UJ	380 UJ	NA	NA	380 UJ	NA	NA	380 UJ	380 U	380 U	390 U	390
Benzo(a)anthracene	380 U	400 U	400 U	380 U	380 U	NA	NA	380 U	NA	NA	380 U	380 U	380 U	390 U	390
Benzo(a)pyrene	380 U	400 U	400 U	380 U	380 U	NA	NA	380 U	NA	NA	380 U	380 U	380 U	390 U	390
Benzo(b)fluoranthene	380 U	400 U	400 U	380 U	380 U	NA	NA	380 U	NA	NA	380 U	380 U	380 U	390 U	390
Benzo(g,h,i)perylene	380 U	400 U	400 U	380 U	380 U	NA	NA	380 U	NA	NA	380 U	380 U	380 U	390 U	390
Benzo(k)fluoranthene	380 U	400 U	400 U	380 U	380 U	NA	NA	380 U	NA	NA	380 U	380 U	380 U	390 U	390
Butylbenzylphthalate	380 U	400 U	400 U	380 U	380 U	NA	NA	380 U	NA	NA	380 U	380 U	380 U	390 U	390
Caprolactam	380 U	400 U	400 U	380 U	380 U	NA	NA	380 U	NA	NA	380 U	380 U	380 U	390 U	390
Carbazole	380 U	400 U	400 U	380 U	380 U	NA	NA	380 U	NA	NA	380 U	380 U	380 U	390 U	390
Chrysene	380 U	400 U	400 U	380 U	380 U	NA	NA	380 U	NA	NA	380 U	380 U	380 U	390 U	390
Di-n-butylphthalate	380 U	400 U	400 U	62 J	58 J	NA	NA	72 J	NA	NA	61 J	73 J	44 J	390 U	390
Di-n-octylphthalate	380 U	400 U	400 U	380 U	380 U	NA	NA	380 U	NA	NA	380 U	380 U	380 U	390 U	390
Dibenz(a,h)anthracene	380 U	400 U	400 U	380 U	380 U	NA	NA	380 U	NA	NA	380 U	380 U	380 U	390 U	390
Dibenzofuran	380 U	400 U	400 U	380 U	380 U	NA	NA	380 U	NA	NA	380 U	380 U	380 U	390 U	390
Diethylphthalate	380 U	400 U	400 U	380 U	380 U	NA	NA	380 U	NA	NA	380 U	380 U	380 U	390 U	390
Dimethyl phthalate	380 U	400 U	400 U	380 U	380 U	NA	NA	380 U	NA	NA	380 U	380 U	380 U	390 U	390
Fluoranthene	380 U	400 U	400 U	380 U	380 U	NA	NA	380 U	NA	NA	380 U	380 U	380 U	390 U	390
Fluorene	380 U	400 U	400 U	380 U	380 U	NA	NA	380 U	NA	NA	380 U	380 U	380 U	390 U	390
Hexachlorobenzene	380 U	400 U	400 U	380 U	380 U	NA	NA	380 U	NA	NA	380 U	380 U	380 U	390 U	390
Hexachlorobutadiene	380 U	400 U	400 U	380 U	380 U	NA	NA	380 U	NA	NA	380 U	380 U	380 U	390 U	390
Hexachlorocyclopentadiene	380 U	400 UJ	400 UJ	380 U	380 U	NA	NA	380 U	NA	NA	380 U	380 U	380 U	390 U	390
Hexachloroethane	380 U	400 U	400 U	380 U	380 U	NA	NA	380 U	NA	NA	380 U	380 U	380 U	390 U	390
Indeno(1,2,3-cd)pyrene	380 U	400 U	400 U	380 U	380 U	NA	NA	380 U	NA	NA	380 U	380 U	380 U	390 U	390
Isophorone	380 U	400 U	400 U	380 U	380 U	NA	NA	380 U	NA	NA	380 U	380 U	380 U	390 U	390
Naphthalene	380 U	400 U	400 U	380 U	380 U	NA	NA	380 U	NA	NA	380 U	380 U	380 U	390 U	390
Nitrobenzene	380 U	400 U	400 U	380 U	380 U	NA	NA	380 U	NA	NA	380 U	380 U	380 U	390 U	390
Pentachlorophenol	970 U	1,000 U	1,000 U	950 U	950 U	NA	NA	960 U	NA	NA	940 U	950 U	940 U	970 U	980
Phenanthrene	380 U	400 U	400 U	380 U	380 U	NA	NA	380 U	NA	NA	380 U	380 U	380 U	390 U	390
Phenol	380 U	400 U	400 U	380 U	380 U	NA	NA	380 U	NA	NA	380 U	380 U	380 U	390 U	390
Pyrene	380 U	400 U	400 U	380 U	380 U	NA	NA	380 U	NA	NA	380 U	380 U	380 U	390 U	390
bis(2-Chloroethoxy)methane	380 U	400 U	400 U	380 U	380 U	NA	NA	380 U	NA	NA	380 U	380 U	380 U	390 U	390
bis(2-Chloroethyl)ether	380 U	400 U	400 U	380 U	380 U	NA	NA	380 U	NA	NA	380 U	380 U	380 U	390 U	390
bis(2-Ethylhexyl)phthalate	61 U	230 U	170 U	110 U	100 U	NA	NA	400 U	NA	NA	300 U	170 U	130 U	120 U	110
n-Nitroso-di-n-propylamine	380 U	400 UJ	400 UJ	380 U	380 U	NA	NA	380 U	NA	NA	380 U	380 U	380 U	390 U	390
n-Nitrosodiphenylamine	380 U	400 U	400 U	380 U	380 U	NA	NA	380 U	NA	NA	380 U	380 U	380 U	390 U	390

Site 95 Subsurface Soil Raw Analytical Data
October 2006

Station ID	IR95A-IS100	IR95A-IS101			IR95A-IS102	IR95A-IS103	IR95A-IS115	IR95A-IS117	IR95A-IS119		IR95A-IS121	IR95A-IS123	IR95B-IS101	IR95B-IS103	IR95B-IS105
Sample ID	IR95A-IS100-3-4-06D-1	IR95A-IS101-3-4-06D-1	IR95A-IS101-3-4-06D-2	IR95A-IS101D-3-4-06D-2	IR95A-IS102-3-4-06D-1	IR95A-IS103-3-4-06D-2	IR95A-IS115-3-4-06D-2	IR95A-IS117-3-4-06D-2	IR95A-IS119-3-4-06D-2	IR95A-IS119D-3-4-06D-2	IR95A-IS121-3-4-06D-2	IR95A-IS123-3-4-06D-2	IR95B-IS101-3-4-06D-2	IR95B-IS103-3-4-06D-2	IR95B-IS105-3-4-06D-2
Sample Date	10/03/06	10/03/06	10/04/06	10/04/06	10/03/06	10/04/06	10/04/06	10/04/06	10/04/06	10/04/06	10/04/06	10/04/06	10/05/06	10/05/06	10/05/06
Chemical Name															
Semi-volatile Organic Compounds (UG/KG)															
1,1-Biphenyl	NA	NA	360 U	390 U	NA	370 U	380 U	420 U	340 U	350 U	390 U	370 U	390 U	380 U	380 U
2,2'-Oxybis(1-chloropropane)	NA	NA	360 U	390 U	NA	370 U	380 U	420 U	340 U	350 U	390 U	370 U	390 U	380 U	380 U
2,4,5-Trichlorophenol	NA	NA	900 U	980 U	NA	930 U	940 U	1,100 U	860 U	880 U	980 U	930 U	970 U	970 U	960 U
2,4,6-Trichlorophenol	NA	NA	360 U	390 U	NA	370 U	380 U	420 U	340 U	350 U	390 U	370 U	390 U	380 U	380 U
2,4-Dichlorophenol	NA	NA	360 U	390 U	NA	370 U	380 U	420 U	340 U	350 U	390 U	370 U	390 U	380 U	380 U
2,4-Dimethylphenol	NA	NA	360 U	390 U	NA	370 U	380 U	420 U	340 U	350 U	390 U	370 U	390 U	380 U	380 U
2,4-Dinitrophenol	NA	NA	900 UJ	980 UJ	NA	930 UJ	940 UJ	1,100 UJ	860 UJ	880 UJ	980 UJ	930 UJ	970 R	970 R	960 R
2,4-Dinitrotoluene	NA	NA	360 U	390 U	NA	370 U	380 U	420 U	340 U	350 U	390 U	370 U	390 U	380 U	380 U
2,6-Dinitrotoluene	NA	NA	360 U	390 U	NA	370 U	380 U	420 U	340 U	350 U	390 U	370 U	390 U	380 U	380 U
2-Chloronaphthalene	NA	NA	360 U	390 U	NA	370 U	380 U	420 U	340 U	350 U	390 U	370 U	390 U	380 U	380 U
2-Chlorophenol	NA	NA	360 U	390 U	NA	370 U	380 U	420 U	340 U	350 U	390 U	370 U	390 U	380 U	380 U
2-Methylnaphthalene	NA	NA	360 U	390 U	NA	370 U	380 U	420 U	340 U	350 U	390 U	370 U	390 U	380 U	380 U
2-Methylphenol	NA	NA	360 U	390 U	NA	370 U	380 U	420 U	340 U	350 U	390 U	370 U	390 U	380 U	380 U
2-Nitroaniline	NA	NA	900 U	980 U	NA	930 U	940 U	1,100 U	860 U	880 U	980 U	930 U	970 U	970 U	960 U
2-Nitrophenol	NA	NA	360 U	390 U	NA	370 U	380 U	420 U	340 U	350 U	390 U	370 U	390 U	380 U	380 U
3,3'-Dichlorobenzidine	NA	NA	360 U	390 UJ	NA	370 UJ	380 U	420 U	340 U	350 U	390 UJ	370 UJ	390 UJ	380 U	380 UJ
3-Nitroaniline	NA	NA	900 U	980 U	NA	930 U	940 U	1,100 U	860 U	880 U	980 U	930 U	970 U	970 U	960 U
4,6-Dinitro-2-methylphenol	NA	NA	900 U	980 UJ	NA	930 UJ	940 UJ	1,100 UJ	860 UJ	880 UJ	980 UJ	930 UJ	970 UJ	970 UJ	960 UJ
4-Bromophenyl-phenylether	NA	NA	360 U	390 U	NA	370 U	380 U	420 U	340 U	350 U	390 U	370 U	390 U	380 U	380 U
4-Chloro-3-methylphenol	NA	NA	360 U	390 U	NA	370 U	380 U	420 U	340 U	350 U	390 U	370 U	390 U	380 U	380 U
4-Chloroaniline	NA	NA	360 U	390 U	NA	370 U	380 U	420 U	340 U	350 U	390 U	370 U	390 UJ	380 U	380 U
4-Chlorophenyl-phenylether	NA	NA	360 U	390 U	NA	370 U	380 U	420 U	340 U	350 U	390 U	370 U	390 U	380 U	380 U
4-Methylphenol	NA	NA	360 U	390 U	NA	370 U	380 U	420 U	340 U	350 U	390 U	370 U	390 U	380 U	380 U
4-Nitroaniline	NA	NA	900 UJ	980 UJ	NA	930 UJ	940 U	1,100 U	860 U	880 U	980 UJ	930 UJ	970 UJ	970 U	960 UJ
4-Nitrophenol	NA	NA	900 U	980 U	NA	930 U	940 U	1,100 U	860 U	880 U	980 U	930 U	970 UJ	970 U	960 UJ
Acenaphthene	NA	NA	360 U	390 U	NA	370 U	380 U	420 U	340 U	350 U	390 U	370 U	390 U	380 U	380 U
Acenaphthylene	NA	NA	360 U	390 U	NA	370 U	380 U	420 U	340 U	350 U	390 U	370 U	390 U	380 U	380 U
Acetophenone	NA	NA	360 U	390 U	NA	370 U	380 U	420 U	340 U	350 U	390 U	370 U	390 U	380 U	380 U
Anthracene	NA	NA	360 U	390 U	NA	370 U	380 U	420 U	340 U	350 U	390 U	370 U	390 U	380 U	380 U
Atrazine	NA	NA	360 U	390 U	NA	370 U	380 U	420 U	340 U	350 U	390 U	370 U	390 U	380 U	380 U
Benzaldehyde	NA	NA	360 UJ	390 U	NA	370 U	380 U	420 U	340 U	350 U	390 U	370 U	390 U	380 U	380 U
Benzo(a)anthracene	NA	NA	360 U	390 U	NA	370 U	380 U	420 U	340 U	350 U	390 U	370 U	390 U	380 U	380 U
Benzo(a)pyrene	NA	NA	360 U	390 U	NA	370 U	380 U	420 U	340 U	350 U	390 U	370 U	390 U	380 U	380 U
Benzo(b)fluoranthene	NA	NA	360 U	390 U	NA	370 U	380 U	420 U	340 U	350 U	390 U	370 U	390 U	380 U	380 U
Benzo(g,h,i)perylene	NA	NA	360 U	390 U	NA	370 U	380 U	420 U	340 U	350 U	390 U	370 U	390 U	380 U	380 U
Benzo(k)fluoranthene	NA	NA	360 U	390 U	NA	370 U	380 U	420 U	340 U	350 U	390 U	370 U	390 U	380 U	380 U
Butylbenzylphthalate	NA	NA	360 U	390 U	NA	370 U	380 U	420 U	340 U	350 U	390 U	370 U	390 U	380 U	380 U
Caprolactam	NA	NA	360 U	390 U	NA	39 J	380 U	420 U	340 U	350 U	390 U	370 U	390 U	380 U	380 U
Carbazole	NA	NA	360 U	390 U	NA	370 U	380 U	420 U	340 U	350 U	390 U	370 U	390 U	380 U	380 U
Chrysene	NA	NA	360 U	390 U	NA	370 U	380 U	420 U	340 U	350 U	390 U	370 U	390 U	380 U	380 U
Di-n-butylphthalate	NA	NA	42 J	54 J	NA	44 J	43 J	58 J	52 J	60 J	50 J	61 J	390 U	380 U	380 U
Di-n-octylphthalate	NA	NA	360 U	390 UJ	NA	370 UJ	380 U	420 U	340 U	350 U	390 UJ	370 UJ	390 U	380 U	380 U
Dibenz(a,h)anthracene	NA	NA	360 U	390 U	NA	370 U	380 U	420 U	340 U	350 U	390 U	370 U	390 U	380 U	380 U
Dibenzofuran	NA	NA	360 U	390 U	NA	370 U	380 U	420 U	340 U	350 U	390 U	370 U	390 U	380 U	380 U
Diethylphthalate	NA	NA	360 U	390 U	NA	370 U	380 U	420 U	340 U	350 U	390 U	370 U	390 U	380 U	380 U
Dimethyl phthalate	NA	NA	360 U	390 U	NA	370 U	380 U	420 U	340 U	350 U	390 U	370 U	390 U	380 U	380 U
Fluoranthene	NA	NA	360 U	390 U	NA	370 U	380 U	420 U	340 U	350 U	390 U	370 U	390 U	380 U	380 U
Fluorene	NA	NA	360 U	390 U	NA	370 U	380 U	420 U	340 U	350 U	390 U	370 U	390 U	380 U	380 U
Hexachlorobenzene	NA	NA	360 U	390 U	NA	370 U	380 U	420 U	340 U	350 U	390 U	370 U	390 U	380 U	380 U
Hexachlorobutadiene	NA	NA	360 U	390 U	NA	370 U	380 U	420 U	340 U	350 U	390 U	370 U	390 U	380 U	380 U
Hexachlorocyclopentadiene	NA	NA	360 UJ	390 U	NA	370 U	380 U	420 U	340 U	350 U	390 U	370 U	390 R	380 U	380 R
Hexachloroethane	NA	NA	360 U	390 U	NA	370 U	380 U	420 U	340 U	350 U	390 U	370 U	390 U	380 U	380 U
Indeno(1,2,3-cd)pyrene	NA	NA	360 U	390 U	NA	370 U	380 U	420 U	340 U	350 U	390 U	370 U	390 U	380 U	380 U
Isophorone	NA	NA	360 U	390 U	NA	370 U	380 U	420 U	340 U	350 U	390 U	370 U	390 U	380 U	380 U
Naphthalene	NA	NA	360 U	390 U	NA	370 U	380 U	420 U	340 U	350 U	390 U	370 U	390 U	380 U	380 U
Nitrobenzene	NA	NA	360 U	390 U	NA	370 U	380 U	420 U	340 U	350 U	390 U	370 U	390 U	380 U	380 U
Pentachlorophenol	NA	NA	900 U	980 U	NA	930 U	940 U	1,100 U	860 U	880 U	980 U	930 U	970 U	970 U	960 U
Phenanthrene	NA	NA	360 U	390 U	NA	370 U	380 U	420 U	340 U	350 U	390 U	370 U	390 U	380 U	380 U
Phenol	NA	NA	360 U	390 U	NA	370 U	380 U	420 U	340 U	350 U	390 U	370 U	390 U	380 U	380 U
Pyrene	NA	NA	360 U	390 U	NA	370 U	380 U	420 U	340 U	350 U	390 U	370 U	390 U	380 U	380 U
bis(2-Chloroethoxy)methane	NA	NA	360 U	390 U	NA	370 U	380 U	420 U	340 U	350 U	390 U	370 U	390 U	380 U	380 U
bis(2-Chloroethyl)ether	NA	NA	360 U	390 U	NA	370 U	380 U	420 U	340 U	350 U	390 U	370 U	390 U	380 U	380 U
bis(2-Ethylhexyl)phthalate	NA	NA	140 J	140 J	NA	130 J	160 J	430	210 J	300 J	86 J	170 J	73 J	47 U	66 U
n-Nitroso-di-n-propylamine	NA	NA	360 UJ	390 U	NA	370 U	380 U	420 U	340 U	350 U	390 U	370 U	390 U	380 U	380 U
n-Nitrosodiphenylamine	NA	NA	360 U	390 U	NA	370 U	380 U	420 U	340 U	350 U	390 U	370 U	390 U	380 U	380 U

Station ID		IR95C-IS115	IR95C-IS117	IR95C-IS119	IR95C-IS121	IR95C-IS123		IR95C-IS125	IR95C-IS127
Sample ID	2	IR95C-IS115-3-4-06D-2	IR95C-IS117-3-4-06D-2	IR95C-IS119-3-4-06D-2	IR95C-IS121-3-4-06D-2	IR95C-IS123-3-4-06D-2	IR95C-IS123D-3-4-06D-2	IR95C-IS125-3-4-06D-2	IR95C-IS127-3-4-06D-2
Sample Date		10/03/06	10/03/06	10/03/06	10/03/06	10/03/06	10/03/06	10/03/06	10/03/06
Chemical Name									
Volatile Organic Compounds (UG/KG)									
1,1,1-Trichloroethane		NA	NA	NA	NA	NA	NA	NA	NA
1,1,2,2-Tetrachloroethane		NA	NA	NA	NA	NA	NA	NA	NA
1,1,2-Trichloro-1,2,2-trifluoroethane(Freon-113)		NA	NA	NA	NA	NA	NA	NA	NA
1,1,2-Trichloroethane		NA	NA	NA	NA	NA	NA	NA	NA
1,1-Dichloroethane		NA	NA	NA	NA	NA	NA	NA	NA
1,1-Dichloroethene		NA	NA	NA	NA	NA	NA	NA	NA
1,2,4-Trichlorobenzene		NA	NA	NA	NA	NA	NA	NA	NA
1,2-Dibromo-3-chloropropane		NA	NA	NA	NA	NA	NA	NA	NA
1,2-Dibromoethane		NA	NA	NA	NA	NA	NA	NA	NA
1,2-Dichlorobenzene		NA	NA	NA	NA	NA	NA	NA	NA
1,2-Dichloroethane		NA	NA	NA	NA	NA	NA	NA	NA
1,2-Dichloropropane		NA	NA	NA	NA	NA	NA	NA	NA
1,3-Dichlorobenzene		NA	NA	NA	NA	NA	NA	NA	NA
1,4-Dichlorobenzene		NA	NA	NA	NA	NA	NA	NA	NA
2-Butanone		NA	NA	NA	NA	NA	NA	NA	NA
2-Hexanone		NA	NA	NA	NA	NA	NA	NA	NA
4-Methyl-2-pentanone		NA	NA	NA	NA	NA	NA	NA	NA
Acetone		NA	NA	NA	NA	NA	NA	NA	NA
Benzene		NA	NA	NA	NA	NA	NA	NA	NA
Bromodichloromethane		NA	NA	NA	NA	NA	NA	NA	NA
Bromoform		NA	NA	NA	NA	NA	NA	NA	NA
Bromomethane		NA	NA	NA	NA	NA	NA	NA	NA
Carbon disulfide		NA	NA	NA	NA	NA	NA	NA	NA
Carbon tetrachloride		NA	NA	NA	NA	NA	NA	NA	NA
Chlorobenzene		NA	NA	NA	NA	NA	NA	NA	NA
Chloroethane		NA	NA	NA	NA	NA	NA	NA	NA
Chloroform		NA	NA	NA	NA	NA	NA	NA	NA
Chloromethane		NA	NA	NA	NA	NA	NA	NA	NA
Cyclohexane		NA	NA	NA	NA	NA	NA	NA	NA
Dibromochloromethane		NA	NA	NA	NA	NA	NA	NA	NA
Dichlorodifluoromethane (Freon-12)		NA	NA	NA	NA	NA	NA	NA	NA
Ethylbenzene		NA	NA	NA	NA	NA	NA	NA	NA
Isopropylbenzene		NA	NA	NA	NA	NA	NA	NA	NA
Methyl acetate		NA	NA	NA	NA	NA	NA	NA	NA
Methyl-tert-butyl ether (MTBE)		NA	NA	NA	NA	NA	NA	NA	NA
Methylcyclohexane		NA	NA	NA	NA	NA	NA	NA	NA
Methylene chloride		NA	NA	NA	NA	NA	NA	NA	NA
Styrene		NA	NA	NA	NA	NA	NA	NA	NA
Tetrachloroethene		NA	NA	NA	NA	NA	NA	NA	NA
Toluene		NA	NA	NA	NA	NA	NA	NA	NA
Trichloroethene		NA	NA	NA	NA	NA	NA	NA	NA
Trichlorofluoromethane(Freon-11)		NA	NA	NA	NA	NA	NA	NA	NA
Vinyl chloride		NA	NA	NA	NA	NA	NA	NA	NA
Xylene, total		NA	NA	NA	NA	NA	NA	NA	NA
cis-1,2-Dichloroethene		NA	NA	NA	NA	NA	NA	NA	NA
cis-1,3-Dichloropropene		NA	NA	NA	NA	NA	NA	NA	NA
trans-1,2-Dichloroethene		NA	NA	NA	NA	NA	NA	NA	NA
trans-1,3-Dichloropropene		NA	NA	NA	NA	NA	NA	NA	NA

Site 95 Subsurface Soil Raw Analytical Data
October 2006

Station ID		IR95B-IS125	IR95B-IS127		IR95B-IS129	IR95C-IS100	IR95C-IS101		IR95C-IS102	IR95C-IS103	IR95C-IS105	IR95C-IS107	IR95C-IS109	IR95C-IS111	IR95C-IS113	
Sample ID	2	IR95B-IS125-3-4-06D-2	IR95B-IS127-3-4-06D-2	IR95B-IS127D-3-4-06D-2	IR95B-IS129-3-4-06D-2	IR95C-IS100-3-4-06D-1	IR95C-IS101-3-4-06D-1	IR95C-IS101-3-4-06D-2	IR95C-IS102-3-4-06D-1	IR95C-IS103-3-4-06D-2	IR95C-IS105-3-4-06D-2	IR95C-IS107-3-4-06D-2	IR95C-IS109-3-4-06D-2	IR95C-IS111-3-4-06D-2	IR95C-IS113-3-4-06D-2	IR95C-IS113D-3-4-06D
Sample Date		10/05/06	10/05/06	10/05/06	10/05/06	10/03/06	10/03/06	10/03/06	10/03/06	10/03/06	10/03/06	10/03/06	10/03/06	10/03/06	10/03/06	10/03/06
Chemical Name																
Volatile Organic Compounds (UG/KG)																
1,1,1-Trichloroethane		NA	NA	NA	NA	12 U	11 U	NA	10 U	NA	NA	NA	NA	NA	NA	NA
1,1,2,2-Tetrachloroethane		NA	NA	NA	NA	12 U	11 U	NA	10 U	NA	NA	NA	NA	NA	NA	NA
1,1,2-Trichloro-1,2,2-trifluoroethane(Freon-113)		NA	NA	NA	NA	12 U	11 U	NA	10 U	NA	NA	NA	NA	NA	NA	NA
1,1,2-Trichloroethane		NA	NA	NA	NA	12 U	11 U	NA	10 U	NA	NA	NA	NA	NA	NA	NA
1,1-Dichloroethane		NA	NA	NA	NA	12 U	11 U	NA	10 U	NA	NA	NA	NA	NA	NA	NA
1,1-Dichloroethene		NA	NA	NA	NA	12 U	11 U	NA	10 U	NA	NA	NA	NA	NA	NA	NA
1,2,4-Trichlorobenzene		NA	NA	NA	NA	12 U	11 U	NA	10 U	NA	NA	NA	NA	NA	NA	NA
1,2-Dibromo-3-chloropropane		NA	NA	NA	NA	12 U	11 U	NA	10 U	NA	NA	NA	NA	NA	NA	NA
1,2-Dibromoethane		NA	NA	NA	NA	12 U	11 U	NA	10 U	NA	NA	NA	NA	NA	NA	NA
1,2-Dichlorobenzene		NA	NA	NA	NA	12 U	11 U	NA	10 U	NA	NA	NA	NA	NA	NA	NA
1,2-Dichloroethane		NA	NA	NA	NA	12 U	11 U	NA	10 U	NA	NA	NA	NA	NA	NA	NA
1,2-Dichloropropane		NA	NA	NA	NA	12 U	11 U	NA	10 U	NA	NA	NA	NA	NA	NA	NA
1,3-Dichlorobenzene		NA	NA	NA	NA	12 U	11 U	NA	10 U	NA	NA	NA	NA	NA	NA	NA
1,4-Dichlorobenzene		NA	NA	NA	NA	12 U	11 U	NA	10 U	NA	NA	NA	NA	NA	NA	NA
2-Butanone		NA	NA	NA	NA	12 U	11 U	NA	10 U	NA	NA	NA	NA	NA	NA	NA
2-Hexanone		NA	NA	NA	NA	12 U	11 U	NA	10 U	NA	NA	NA	NA	NA	NA	NA
4-Methyl-2-pentanone		NA	NA	NA	NA	12 U	11 U	NA	10 U	NA	NA	NA	NA	NA	NA	NA
Acetone		NA	NA	NA	NA	12 U	11 U	NA	10 U	NA	NA	NA	NA	NA	NA	NA
Benzene		NA	NA	NA	NA	12 U	11 U	NA	10 U	NA	NA	NA	NA	NA	NA	NA
Bromodichloromethane		NA	NA	NA	NA	12 U	11 U	NA	10 U	NA	NA	NA	NA	NA	NA	NA
Bromoform		NA	NA	NA	NA	12 U	11 U	NA	10 U	NA	NA	NA	NA	NA	NA	NA
Bromomethane		NA	NA	NA	NA	12 U	11 U	NA	10 U	NA	NA	NA	NA	NA	NA	NA
Carbon disulfide		NA	NA	NA	NA	12 U	11 U	NA	10 U	NA	NA	NA	NA	NA	NA	NA
Carbon tetrachloride		NA	NA	NA	NA	12 U	11 U	NA	10 U	NA	NA	NA	NA	NA	NA	NA
Chlorobenzene		NA	NA	NA	NA	12 U	11 U	NA	10 U	NA	NA	NA	NA	NA	NA	NA
Chloroethane		NA	NA	NA	NA	12 U	11 U	NA	10 U	NA	NA	NA	NA	NA	NA	NA
Chloroform		NA	NA	NA	NA	12 U	11 U	NA	10 U	NA	NA	NA	NA	NA	NA	NA
Chloromethane		NA	NA	NA	NA	12 U	11 U	NA	10 U	NA	NA	NA	NA	NA	NA	NA
Cyclohexane		NA	NA	NA	NA	12 U	11 U	NA	10 U	NA	NA	NA	NA	NA	NA	NA
Dibromochloromethane		NA	NA	NA	NA	12 U	11 U	NA	10 U	NA	NA	NA	NA	NA	NA	NA
Dichlorodifluoromethane (Freon-12)		NA	NA	NA	NA	12 U	11 U	NA	10 U	NA	NA	NA	NA	NA	NA	NA
Ethylbenzene		NA	NA	NA	NA	12 U	11 U	NA	10 U	NA	NA	NA	NA	NA	NA	NA
Isopropylbenzene		NA	NA	NA	NA	12 U	11 U	NA	10 U	NA	NA	NA	NA	NA	NA	NA
Methyl acetate		NA	NA	NA	NA	12 UJ	11 UJ	NA	10 UJ	NA	NA	NA	NA	NA	NA	NA
Methyl-tert-butyl ether (MTBE)		NA	NA	NA	NA	12 U	11 U	NA	10 U	NA	NA	NA	NA	NA	NA	NA
Methylcyclohexane		NA	NA	NA	NA	12 U	11 U	NA	10 U	NA	NA	NA	NA	NA	NA	NA
Methylene chloride		NA	NA	NA	NA	12 U	11 U	NA	10 U	NA	NA	NA	NA	NA	NA	NA
Styrene		NA	NA	NA	NA	12 U	11 U	NA	10 U	NA	NA	NA	NA	NA	NA	NA
Tetrachloroethene		NA	NA	NA	NA	12 U	11 U	NA	10 U	NA	NA	NA	NA	NA	NA	NA
Toluene		NA	NA	NA	NA	12 U	11 U	NA	10 U	NA	NA	NA	NA	NA	NA	NA
Trichloroethene		NA	NA	NA	NA	12 U	11 U	NA	10 U	NA	NA	NA	NA	NA	NA	NA
Trichlorofluoromethane(Freon-11)		NA	NA	NA	NA	12 UJ	11 UJ	NA	10 UJ	NA	NA	NA	NA	NA	NA	NA
Vinyl chloride		NA	NA	NA	NA	12 U	11 U	NA	10 U	NA	NA	NA	NA	NA	NA	NA
Xylene, total		NA	NA	NA	NA	12 U	11 U	NA	10 U	NA	NA	NA	NA	NA	NA	NA
cis-1,2-Dichloroethene		NA	NA	NA	NA	12 U	11 U	NA	10 U	NA	NA	NA	NA	NA	NA	NA
cis-1,3-Dichloropropene		NA	NA	NA	NA	12 U	11 U	NA	10 U	NA	NA	NA	NA	NA	NA	NA
trans-1,2-Dichloroethene		NA	NA	NA	NA	12 U	11 U	NA	10 U	NA	NA	NA	NA	NA	NA	NA
trans-1,3-Dichloropropene		NA	NA	NA	NA	12 U	11 U	NA	10 U	NA	NA	NA	NA	NA	NA	NA

Station ID	IR95B-IS107	IR95B-IS109		IR95B-IS111	IR95B-IS113	IR95B-IS114	IR95B-IS115		IR95B-IS116		IR95B-IS117		IR95B-IS119	IR95B-IS121	IR95B-IS123
Sample ID	IR95B-IS107-3-4-06D-2	IR95B-IS109-3-4-06D-2	IR95B-IS109D-3-4-06D-2	IR95B-IS111-3-4-06D-2	IR95B-IS113-3-4-06D-2	IR95B-IS114-3-4-06D-1	IR95B-IS115-3-4-06D-1	IR95B-IS115-3-4-06D-2	IR95B-IS116-3-4-06D-1	IR95B-IS116D-3-4-06D-1	IR95B-IS117-3-4-06D-2	IR95B-IS117D-3-4-06D-2	IR95B-IS119-3-4-06D-2	IR95B-IS121-3-4-06D-2	IR95B-IS123-3-4-06D
Sample Date	10/05/06	10/05/06	10/05/06	10/05/06	10/05/06	10/03/06	10/03/06	10/05/06	10/03/06	10/03/06	10/05/06	10/05/06	10/05/06	10/05/06	10/05/06
Chemical Name															
Volatile Organic Compounds (UG/KG)															
1,1,1-Trichloroethane	NA	NA	NA	NA	NA	10 U	10 U	NA	11 U	13 U	NA	NA	NA	NA	NA
1,1,2,2-Tetrachloroethane	NA	NA	NA	NA	NA	10 U	10 U	NA	11 U	13 U	NA	NA	NA	NA	NA
1,1,2-Trichloro-1,2,2-trifluoroethane(Freon-113)	NA	NA	NA	NA	NA	10 U	10 U	NA	11 U	13 U	NA	NA	NA	NA	NA
1,1,2-Trichloroethane	NA	NA	NA	NA	NA	10 U	10 U	NA	11 U	13 U	NA	NA	NA	NA	NA
1,1-Dichloroethane	NA	NA	NA	NA	NA	10 U	10 U	NA	11 U	13 U	NA	NA	NA	NA	NA
1,1-Dichloroethene	NA	NA	NA	NA	NA	10 U	10 U	NA	11 U	13 U	NA	NA	NA	NA	NA
1,2,4-Trichlorobenzene	NA	NA	NA	NA	NA	10 U	10 U	NA	11 U	13 U	NA	NA	NA	NA	NA
1,2-Dibromo-3-chloropropane	NA	NA	NA	NA	NA	10 U	10 U	NA	11 U	13 U	NA	NA	NA	NA	NA
1,2-Dibromoethane	NA	NA	NA	NA	NA	10 U	10 U	NA	11 U	13 U	NA	NA	NA	NA	NA
1,2-Dichlorobenzene	NA	NA	NA	NA	NA	10 U	10 U	NA	11 U	13 U	NA	NA	NA	NA	NA
1,2-Dichloroethane	NA	NA	NA	NA	NA	10 U	10 U	NA	11 U	13 U	NA	NA	NA	NA	NA
1,2-Dichloropropane	NA	NA	NA	NA	NA	10 U	10 U	NA	11 U	13 U	NA	NA	NA	NA	NA
1,3-Dichlorobenzene	NA	NA	NA	NA	NA	10 U	10 U	NA	11 U	13 U	NA	NA	NA	NA	NA
1,4-Dichlorobenzene	NA	NA	NA	NA	NA	10 U	10 U	NA	11 U	13 U	NA	NA	NA	NA	NA
2-Butanone	NA	NA	NA	NA	NA	10 U	10 U	NA	11 U	46	NA	NA	NA	NA	NA
2-Hexanone	NA	NA	NA	NA	NA	10 U	10 U	NA	11 U	13 U	NA	NA	NA	NA	NA
4-Methyl-2-pentanone	NA	NA	NA	NA	NA	10 U	10 U	NA	11 U	13 U	NA	NA	NA	NA	NA
Acetone	NA	NA	NA	NA	NA	10 U	10 U	NA	11 U	7 J	NA	NA	NA	NA	NA
Benzene	NA	NA	NA	NA	NA	10 U	10 U	NA	11 U	13 U	NA	NA	NA	NA	NA
Bromodichloromethane	NA	NA	NA	NA	NA	10 U	10 U	NA	11 U	13 U	NA	NA	NA	NA	NA
Bromoform	NA	NA	NA	NA	NA	10 U	10 U	NA	11 U	13 U	NA	NA	NA	NA	NA
Bromomethane	NA	NA	NA	NA	NA	10 U	10 U	NA	11 U	13 U	NA	NA	NA	NA	NA
Carbon disulfide	NA	NA	NA	NA	NA	10 U	10 U	NA	11 U	13 U	NA	NA	NA	NA	NA
Carbon tetrachloride	NA	NA	NA	NA	NA	10 U	10 U	NA	11 U	13 U	NA	NA	NA	NA	NA
Chlorobenzene	NA	NA	NA	NA	NA	10 U	10 U	NA	11 U	13 U	NA	NA	NA	NA	NA
Chloroethane	NA	NA	NA	NA	NA	10 U	10 U	NA	11 U	13 U	NA	NA	NA	NA	NA
Chloroform	NA	NA	NA	NA	NA	10 U	10 U	NA	11 U	13 U	NA	NA	NA	NA	NA
Chloromethane	NA	NA	NA	NA	NA	10 U	10 U	NA	11 U	13 U	NA	NA	NA	NA	NA
Cyclohexane	NA	NA	NA	NA	NA	10 U	10 U	NA	11 U	13 U	NA	NA	NA	NA	NA
Dibromochloromethane	NA	NA	NA	NA	NA	10 U	10 U	NA	11 U	13 U	NA	NA	NA	NA	NA
Dichlorodifluoromethane (Freon-12)	NA	NA	NA	NA	NA	10 U	10 U	NA	11 U	13 U	NA	NA	NA	NA	NA
Ethylbenzene	NA	NA	NA	NA	NA	10 U	10 U	NA	11 U	13 U	NA	NA	NA	NA	NA
Isopropylbenzene	NA	NA	NA	NA	NA	10 U	10 U	NA	11 U	13 U	NA	NA	NA	NA	NA
Methyl acetate	NA	NA	NA	NA	NA	10 UJ	10 UJ	NA	11 UJ	13 UJ	NA	NA	NA	NA	NA
Methyl-tert-butyl ether (MTBE)	NA	NA	NA	NA	NA	10 U	10 U	NA	11 U	13 U	NA	NA	NA	NA	NA
Methylcyclohexane	NA	NA	NA	NA	NA	10 U	10 U	NA	11 U	13 U	NA	NA	NA	NA	NA
Methylene chloride	NA	NA	NA	NA	NA	10 U	10 U	NA	11 U	2 J	NA	NA	NA	NA	NA
Styrene	NA	NA	NA	NA	NA	10 U	10 U	NA	11 U	13 U	NA	NA	NA	NA	NA
Tetrachloroethene	NA	NA	NA	NA	NA	10 U	10 U	NA	11 U	13 U	NA	NA	NA	NA	NA
Toluene	NA	NA	NA	NA	NA	10 U	10 U	NA	11 U	13 U	NA	NA	NA	NA	NA
Trichloroethene	NA	NA	NA	NA	NA	10 U	10 U	NA	11 U	13 U	NA	NA	NA	NA	NA
Trichlorofluoromethane(Freon-11)	NA	NA	NA	NA	NA	10 UJ	10 UJ	NA	11 UJ	13 UJ	NA	NA	NA	NA	NA
Vinyl chloride	NA	NA	NA	NA	NA	10 U	10 U	NA	11 U	13 U	NA	NA	NA	NA	NA
Xylene, total	NA	NA	NA	NA	NA	10 U	10 U	NA	11 U	13 U	NA	NA	NA	NA	NA
cis-1,2-Dichloroethene	NA	NA	NA	NA	NA	10 U	10 U	NA	11 U	13 U	NA	NA	NA	NA	NA
cis-1,3-Dichloropropene	NA	NA	NA	NA	NA	10 U	10 U	NA	11 U	13 U	NA	NA	NA	NA	NA
trans-1,2-Dichloroethene	NA	NA	NA	NA	NA	10 U	10 U	NA	11 U	13 U	NA	NA	NA	NA	NA
trans-1,3-Dichloropropene	NA	NA	NA	NA	NA	10 U	10 U	NA	11 U	13 U	NA	NA	NA	NA	NA

Site 95 Subsurface Soil Raw Analytical Data
October 2006

Station ID	IR95A-IS100	IR95A-IS101			IR95A-IS102	IR95A-IS103	IR95A-IS115	IR95A-IS117	IR95A-IS119		IR95A-IS121	IR95A-IS123	IR95B-IS101	IR95B-IS103	IR95B-IS105
Sample ID	IR95A-IS100-3-4-06D-1	IR95A-IS101-3-4-06D-1	IR95A-IS101-3-4-06D-2	IR95A-IS101D-3-4-06D-2	IR95A-IS102-3-4-06D-1	IR95A-IS103-3-4-06D-2	IR95A-IS115-3-4-06D-2	IR95A-IS117-3-4-06D-2	IR95A-IS119-3-4-06D-2	IR95A-IS119D-3-4-06D-2	IR95A-IS121-3-4-06D-2	IR95A-IS123-3-4-06D-2	IR95B-IS101-3-4-06D-2	IR95B-IS103-3-4-06D-2	IR95B-IS105-3-4-06D-2
Sample Date	10/03/06	10/03/06	10/04/06	10/04/06	10/03/06	10/04/06	10/04/06	10/04/06	10/04/06	10/04/06	10/04/06	10/04/06	10/05/06	10/05/06	10/05/06
Chemical Name															
Volatile Organic Compounds (UG/KG)															
1,1,1-Trichloroethane	11 U	11 U	NA	NA	14 U	NA	NA	NA	NA	NA	NA	NA	NA	NA	NA
1,1,2,2-Tetrachloroethane	11 U	11 U	NA	NA	14 U	NA	NA	NA	NA	NA	NA	NA	NA	NA	NA
1,1,2-Trichloro-1,2,2-trifluoroethane(Freon-113)	11 U	11 U	NA	NA	14 U	NA	NA	NA	NA	NA	NA	NA	NA	NA	NA
1,1,2-Trichloroethane	11 U	11 U	NA	NA	14 U	NA	NA	NA	NA	NA	NA	NA	NA	NA	NA
1,1-Dichloroethane	11 U	11 U	NA	NA	14 U	NA	NA	NA	NA	NA	NA	NA	NA	NA	NA
1,1-Dichloroethene	11 U	11 U	NA	NA	14 U	NA	NA	NA	NA	NA	NA	NA	NA	NA	NA
1,2,4-Trichlorobenzene	11 U	11 U	NA	NA	14 U	NA	NA	NA	NA	NA	NA	NA	NA	NA	NA
1,2-Dibromo-3-chloropropane	11 U	11 U	NA	NA	14 U	NA	NA	NA	NA	NA	NA	NA	NA	NA	NA
1,2-Dibromoethane	11 U	11 U	NA	NA	14 U	NA	NA	NA	NA	NA	NA	NA	NA	NA	NA
1,2-Dichlorobenzene	11 U	11 U	NA	NA	14 U	NA	NA	NA	NA	NA	NA	NA	NA	NA	NA
1,2-Dichloroethane	11 U	11 U	NA	NA	14 U	NA	NA	NA	NA	NA	NA	NA	NA	NA	NA
1,2-Dichloropropane	11 U	11 U	NA	NA	14 U	NA	NA	NA	NA	NA	NA	NA	NA	NA	NA
1,3-Dichlorobenzene	11 U	11 U	NA	NA	14 U	NA	NA	NA	NA	NA	NA	NA	NA	NA	NA
1,4-Dichlorobenzene	11 U	11 U	NA	NA	14 U	NA	NA	NA	NA	NA	NA	NA	NA	NA	NA
2-Butanone	11 U	11 U	NA	NA	14 U	NA	NA	NA	NA	NA	NA	NA	NA	NA	NA
2-Hexanone	11 U	11 U	NA	NA	14 U	NA	NA	NA	NA	NA	NA	NA	NA	NA	NA
4-Methyl-2-pentanone	11 U	11 U	NA	NA	14 U	NA	NA	NA	NA	NA	NA	NA	NA	NA	NA
Acetone	11 U	11 U	NA	NA	14 U	NA	NA	NA	NA	NA	NA	NA	NA	NA	NA
Benzene	11 U	11 U	NA	NA	14 U	NA	NA	NA	NA	NA	NA	NA	NA	NA	NA
Bromodichloromethane	11 U	11 U	NA	NA	14 U	NA	NA	NA	NA	NA	NA	NA	NA	NA	NA
Bromoform	11 U	11 U	NA	NA	14 U	NA	NA	NA	NA	NA	NA	NA	NA	NA	NA
Bromomethane	11 U	11 U	NA	NA	14 U	NA	NA	NA	NA	NA	NA	NA	NA	NA	NA
Carbon disulfide	11 U	11 U	NA	NA	14 U	NA	NA	NA	NA	NA	NA	NA	NA	NA	NA
Carbon tetrachloride	11 U	11 U	NA	NA	14 U	NA	NA	NA	NA	NA	NA	NA	NA	NA	NA
Chlorobenzene	11 U	11 U	NA	NA	14 U	NA	NA	NA	NA	NA	NA	NA	NA	NA	NA
Chloroethane	11 U	11 U	NA	NA	14 U	NA	NA	NA	NA	NA	NA	NA	NA	NA	NA
Chloroform	11 U	11 U	NA	NA	14 U	NA	NA	NA	NA	NA	NA	NA	NA	NA	NA
Chloromethane	11 U	11 U	NA	NA	14 U	NA	NA	NA	NA	NA	NA	NA	NA	NA	NA
Cyclohexane	11 U	11 U	NA	NA	14 U	NA	NA	NA	NA	NA	NA	NA	NA	NA	NA
Dibromochloromethane	11 U	11 U	NA	NA	14 U	NA	NA	NA	NA	NA	NA	NA	NA	NA	NA
Dichlorodifluoromethane (Freon-12)	11 U	11 U	NA	NA	14 U	NA	NA	NA	NA	NA	NA	NA	NA	NA	NA
Ethylbenzene	11 U	11 U	NA	NA	14 U	NA	NA	NA	NA	NA	NA	NA	NA	NA	NA
Isopropylbenzene	11 U	11 U	NA	NA	14 U	NA	NA	NA	NA	NA	NA	NA	NA	NA	NA
Methyl acetate	11 UJ	11 U	NA	NA	14 U	NA	NA	NA	NA	NA	NA	NA	NA	NA	NA
Methyl-tert-butyl ether (MTBE)	11 U	11 U	NA	NA	14 U	NA	NA	NA	NA	NA	NA	NA	NA	NA	NA
Methylcyclohexane	11 U	11 U	NA	NA	14 U	NA	NA	NA	NA	NA	NA	NA	NA	NA	NA
Methylene chloride	11 U	11 U	NA	NA	14 U	NA	NA	NA	NA	NA	NA	NA	NA	NA	NA
Styrene	11 U	11 U	NA	NA	14 U	NA	NA	NA	NA	NA	NA	NA	NA	NA	NA
Tetrachloroethene	11 U	11 U	NA	NA	14 U	NA	NA	NA	NA	NA	NA	NA	NA	NA	NA
Toluene	11 U	11 U	NA	NA	14 U	NA	NA	NA	NA	NA	NA	NA	NA	NA	NA
Trichloroethene	11 U	11 U	NA	NA	14 U	NA	NA	NA	NA	NA	NA	NA	NA	NA	NA
Trichlorofluoromethane(Freon-11)	11 UJ	11 U	NA	NA	14 U	NA	NA	NA	NA	NA	NA	NA	NA	NA	NA
Vinyl chloride	11 U	11 U	NA	NA	14 U	NA	NA	NA	NA	NA	NA	NA	NA	NA	NA
Xylene, total	11 U	11 U	NA	NA	14 U	NA	NA	NA	NA	NA	NA	NA	NA	NA	NA
cis-1,2-Dichloroethene	11 U	11 U	NA	NA	14 U	NA	NA	NA	NA	NA	NA	NA	NA	NA	NA
cis-1,3-Dichloropropene	11 U	11 U	NA	NA	14 U	NA	NA	NA	NA	NA	NA	NA	NA	NA	NA
trans-1,2-Dichloroethene	11 U	11 U	NA	NA	14 U	NA	NA	NA	NA	NA	NA	NA	NA	NA	NA
trans-1,3-Dichloropropene	11 U	11 U	NA	NA	14 U	NA	NA	NA	NA	NA	NA	NA	NA	NA	NA

MCB Camp Lejeune
Site 95 Subsurface Soil Exceedances of Screening Criteria
October 2006

Station ID	BaseWide Background 2002	Region IX PRGs - Residential Soil	NCSSL (May2005)	IR95C-IS121	IR95C-IS123		IR95C-IS125	IR95C-IS127
Sample ID				IR95C-IS121-3-4-06D-2	IR95C-IS123-3-4-06D-2	IR95C-IS123D-3-4-06D-2	IR95C-IS125-3-4-06D-2	IR95C-IS127-3-4-06D-2
Sample Date				10/03/06	10/03/06	10/03/06	10/03/06	10/03/06
Chemical Name								
VOCs (UG/KG)								
2-Butanone	--	22,000,000	17,100	NA	NA	NA	NA	NA
Acetone	--	14,000,000	2,810	NA	NA	NA	NA	NA
Methylene chloride	--	9,100	20.2	NA	NA	NA	NA	NA
SVOCs (UG/KG)								
Caprolactam	--	31,000,000	--	360 UJ	370 UJ	380 UJ	360 UJ	380 UJ
Di-n-butylphthalate	--	6,100,000	24,800	360 U	370 U	380 U	360 U	380 U
bis(2-Ethylhexyl)phthalate	--	35,000	6,670	100 J	96 J	100 J	96 J	91 J
PEST/PCBs (UG/KG)								
4,4'-DDE	--	1,700	--	3.7 U	3.7 U	3.8 U	3.6 U	3.9 U
4,4'-DDT	--	1,700	1,360	3.7 U	5.1 J	3.8 U	3.6 U	3.9 U
Endrin aldehyde	--	18,000	--	3.7 U	2.3 J	3.8 U	3.6 U	3.9 U
Methoxychlor	--	310,000	56,100	19 U	47	23 J	19 U	20 U
Total Metals (MG/KG)								
Aluminum	13,061	76,000	--	5,480	2,360	2,580	2,000	21,600
Antimony	0.392	31	5.42	4.8 UJ	4.8 UJ	0.086 UJ	0.16 UJ	0.36 UJ
Arsenic	5.29	0.39	5.24	***1.7***	0.072 U	0.18 U	0.12 U	***1.8***
Barium	37.34	5,400	848	7.3 J	19.2 J	24.7 J	3.6 J	20.7 J
Beryllium	0.432	150	3.38	0.068 J	0.038 J	0.044 J	0.031 J	0.11 J
Cadmium	--	37	0.95	0.4 U	0.4 U	0.39 U	0.38 U	0.42 U
Calcium	944	--	--	8.9 UJ	155 J	161 J	32.5 UJ	142 J
Chromium	30.9	30	27.2	12.3 J	2.4 J	2.5 J	2.7 J	19.8 J
Cobalt	2.33	900	--	0.38 J	0.14 J	0.15 J	0.15 J	1 J
Copper	7.03	3,100	704	3.3 U	2.9 U	3.3 U	2.8 U	5.1 U
Iron	16,984	23,000	151	3,880 J	1,070 J	1,180 J	983 J	9,830 J
Lead	12.6	400	270	4	3	3.4	3.2	7.9
Magnesium	1,022	--	--	185 J	54 J	60.6 J	52.4 J	551 J
Manganese	23.6	1,800	65.2	4.4 J	3.9 J	4.2 J	3.7 J	7.8 J
Mercury	0.096	23	0.015	0.092 UJ	0.1 UJ	0.095 UJ	0.089 UJ	0.11 UJ
Nickel	4.73	1,600	56.4	3.1 J	0.6 UJ	0.68 UJ	0.61 UJ	3.8 J
Potassium	1,043	--	--	332 J	68.9 J	72.1 J	76.3 J	453 J
Silver	0.18	390	0.217	0.049 U	0.018 U	0.78 U	0.021 U	0.11 U
Sodium	--	--	--	29.4 UJ	33 UJ	43.2 UJ	29.5 UJ	54 UJ
Vanadium	44.7	78	--	17.3	2.7 J	3.1 J	2.7 J	26.6
Zinc	21.5	23,000	550	4.9 UJ	2.5 UJ	2.6 UJ	3 UJ	7.8 UJ

Notes:

Shading Exceeds NCSSLs (North Carolina Soil Screening Levels)

Bold Frame Exceeds Basewide Background Concentrations

Bold and Italicized Exceeds Region IX PRGs

U- Analyte not detected

J- Reported value is estimated

J- - Reported value is biased low

UJ- Analyte not detected. Quantiation limit is imprecise

NA- Not analyzed

VOCs- Volatile Organic Compounds

SVOCs- Semi-Volatile Organic Compounds

PEST/PCBs- Pesticide/Polychlorinated Biphenyls

MCB Camp Lejeune
Site 95 Subsurface Soil Exceedances of Screening Criteria
October 2006

Station ID	BaseWide Background 2002	Region IX PRGs - Residential Soil	NCSSL (May2005)	IR95C-IS100	IR95C-IS101		IR95C-IS102	IR95C-IS103	IR95C-IS105	IR95C-IS107	IR95C-IS109	IR95C-IS111	IR95C-IS113		IR95C-IS115	IR95C-IS117	IR95C-IS119
Sample ID				IR95C-IS100-3-4-06D-1	IR95C-IS101-3-4-06D-1	IR95C-IS101-3-4-06D-2	IR95C-IS102-3-4-06D-1	IR95C-IS103-3-4-06D-2	IR95C-IS105-3-4-06D-2	IR95C-IS107-3-4-06D-2	IR95C-IS109-3-4-06D-2	IR95C-IS111-3-4-06D-2	IR95C-IS113-3-4-06D-2	IR95C-IS113D-3-4-06D-2	IR95C-IS115-3-4-06D-2	IR95C-IS117-3-4-06D-2	IR95C-IS119-3-4-06D-2
Sample Date				10/03/06	10/03/06	10/03/06	10/03/06	10/03/06	10/03/06	10/03/06	10/03/06	10/03/06	10/03/06	10/03/06	10/03/06	10/03/06	10/03/06
Chemical Name																	
VOCs (UG/KG)																	
2-Butanone	--	22,000,000	17,100	12 U	11 U	NA	10 U	NA	NA	NA	NA	NA	NA	NA	NA	NA	NA
Acetone	--	14,000,000	2,810	12 U	11 U	NA	10 U	NA	NA	NA	NA	NA	NA	NA	NA	NA	NA
Methylene chloride	--	9,100	20.2	12 U	11 U	NA	10 U	NA	NA	NA	NA	NA	NA	NA	NA	NA	NA
SVOCs (UG/KG)																	
Caprolactam	--	31,000,000	--	NA	NA	380 U	NA	360 U	370 U	360 U	370 U	380 UJ	360 U	360 U	380 UJ	380 UJ	360 UJ
Di-n-butylphthalate	--	6,100,000	24,800	NA	NA	380 U	NA	360 U	370 U	360 U	370 U	380 U	360 U	360 U	56 J	380 U	360 U
bis(2-Ethylhexyl)phthalate	--	35,000	6,670	NA	NA	50 J	NA	44 J	57 J	39 J	44 J	99 J	43 J	39 J	120 U	83 J	91 J
PEST/PCBs (UG/KG)																	
4,4'-DDE	--	1,700	--	NA	NA	3.8 U	NA	3.6 U	3.7 U	3.6 U	3.7 U	3.7 U	3.6 U	3.6 U	3.8 U	3.8 U	3.6 U
4,4'-DDT	--	1,700	1,360	NA	NA	3.8 U	NA	3.6 U	3.7 U	3.6 U	3.7 U	3.7 U	3.6 U	3.6 U	3.8 U	3.8 U	3.6 U
Endrin aldehyde	--	18,000	--	NA	NA	3.8 U	NA	3.6 U	3.7 U	3.6 U	3.7 U	3.7 U	3.6 U	3.6 U	3.8 U	3.8 U	3.6 U
Methoxychlor	--	310,000	56,100	NA	NA	19 U	NA	18 U	19 U	18 U	19 U	19 U	18 U	18 U	20 U	20 U	18 U
Total Metals (MG/KG)																	
Aluminum	13,061	76,000	--	NA	NA	11,100 J	NA	4,220 J	11,700 J	2,880 J	11,800 J	10,300	6,020 J	6,320 J	13,200	21,300	846
Antimony	0.392	31	5.42	NA	NA	4.9 UJ	NA	0.098 UJ	0.063 UJ	0.14 UJ	0.58 UJ	0.12 UJ	4.6 UJ	0.057 UJ	4.8 UJ	5 UJ	0.049 UJ
Arsenic	5.29	0.39	5.24	NA	NA	0.094 UJ	NA	***1.3 J-***	0.79 UJ	0.13 UJ	0.76 UJ	0.49 U	***1.2 J-***	0.96 UJ	***1.4***	***2.2***	0.079 U
Barium	37.34	5,400	848	NA	NA	13.3 J	NA	6.4 J	16.9 J	5.8 J	14.6 J	12.6 J	9.7 J	9.9 J	14.1 J	18 J	2.4 J
Beryllium	0.432	150	3.38	NA	NA	0.099 J	NA	0.068 J	0.14 J	0.036 J	0.15 J	0.11 J	0.097 J	0.096 J	0.08 J	0.12 J	0.02 J
Cadmium	--	37	0.95	NA	NA	0.4 UJ	NA	0.38 UJ	0.4 UJ	0.37 UJ	0.4 UJ	0.39 U	0.38 UJ	0.37 UJ	0.4 U	0.42 U	0.37 U
Calcium	944	--	--	NA	NA	89.7 UJ	NA	36.1 UJ	400 UJ	370 UJ	400 UJ	390 UJ	380 UJ	196 UJ	400 U	420 UJ	27.9 UJ
Chromium	30.9	30	27.2	NA	NA	11 J	NA	6.3 J-	14.2 J	3 J-	14.2 J	11.4 J	8.8 J	9 J	13.1	20 J	1.8 J
Cobalt	2.33	900	--	NA	NA	0.71 J	NA	0.24 U	0.66 J	0.18 U	0.71 J	0.57 J	0.4 U	0.44 J	0.69 J	1.1 J	0.13 J
Copper	7.03	3,100	704	NA	NA	3.8 U	NA	3.2 U	4.8 U	2.6 U	4.5 U	4.1 U	4 U	3.6 U	4 U	5 U	2.1 U
Iron	16,984	23,000	151	NA	NA	3,040 J	NA	3,100 J	3,770 J	748 J	3,790 J	3,490 J	4,500 J	3,930 J	6,850	11,600 J	408 J
Lead	12.6	400	270	NA	NA	5.9 J	NA	3.3 J	6.5 J	3.7 J	5.8 J	6	4.3 J	4.3 J	6.1	6.9	2.4
Magnesium	1,022	--	--	NA	NA	341 J	NA	174 J	421 J	81.8 J	415 J	352 J	247 J	263 J	310 J	491 J	33.2 J
Manganese	23.6	1,800	65.2	NA	NA	7.1 J	NA	3.9 J	7 J	4.3 J	8.5 J	5.8 J	5.2 J	5.3 J	5.3	8.8 J	3.2 J
Mercury	0.096	23	0.015	NA	NA	0.099 U	NA	0.1 U	0.099 U	0.095 U	0.1 U	0.091 UJ	0.039 J	0.099 U	0.11 UJ	0.012 J-	0.09 UJ
Nickel	4.73	1,600	56.4	NA	NA	2.4 J	NA	1.1 J	2.4 J	0.91 J	2.5 J	2.1 J	1.4 J	1.5 J	2.5 J	3.9 J	0.31 UJ
Potassium	1,043	--	--	NA	NA	459 J	NA	329 J	653 J	114 J	790 J	550 J	480 J	487 J	275 J	485 J	62.2 J
Silver	0.18	390	0.217	NA	NA	0.082 U	NA	0.024 U	0.045 U	0.03 U	0.023 U	0.77 U	0.056 U	0.04 U	0.062 U	0.073 U	0.048 U
Sodium	--	--	--	NA	NA	46 U	NA	30.5 U	43.7 U	24.1 U	36.8 U	38.5 UJ	39 U	33.5 U	26.5 U	52.4 UJ	20.7 UJ
Vanadium	44.7	78	--	NA	NA	15.4 J	NA	9.6 J	23.9 J	2.9 J	20.7 J	16.6	13.3 J	13.7 J	20.6	31.3	1.6 J
Zinc	21.5	23,000	550	NA	NA	5.8 U	NA	3.9 U	6.1 U	3.1 U	8.2 U	6.1 UJ	5 U	4.9 U	5.8 U	7.9 UJ	2.2 UJ

Notes:

Shading Exceeds NCSSLs (North Carolina Soil Screening Levels)

Bold Frame Exceeds Basewide Background Concentrations

Bold and Italicized Exceeds Region IX PRGs

U- Analyte not detected

J- Reported value is estimated

J- - Reported value is biased low

UJ- Analyte not detected. Quantiation limit is imprecise

NA- Not analyzed

VOCs- Volatile Organic Compounds

SVOCs- Semi-Volatile Organic Compounds

PEST/PCBs- Pesticide/Polychlorinated Biphenyls

Site 95
Surface Soil Raw Analytical Data
October 2006

Station ID	IR95C-IS124	IR95C-IS125	IR95C-IS126		IR95C-IS127
Sample ID	IR95C-IS124-0-1-06D-2	IR95C-IS125-0-1-06D-2	IR95C-IS126-0-1-06D-2	IR95C-IS126D-0-1-06D-2	IR95C-IS127-0-1-06D-2
Sample Date	10/02/06	10/02/06	10/02/06	10/02/06	10/02/06
Chemical Name					
Pesticide/Polychlorinated Biphenyls (UG/KG)					
4,4'-DDD	2.5 J	5.6 UJ	3.8 U	4.6 U	3.8 U
4,4'-DDE	4 U	5.6 UJ	3.8 U	2.8 J	3.8 U
4,4'-DDT	4 U	5.6 UJ	3.8 U	4.6 J	4.8 J
Aldrin	2.1 U	2.9 UJ	2 U	2.4 U	2 U
Aroclor-1016	40 U	56 UJ	38 U	46 U	38 U
Aroclor-1221	82 U	110 UJ	77 U	94 U	78 U
Aroclor-1232	40 U	56 UJ	38 U	46 U	38 U
Aroclor-1242	40 U	56 UJ	38 U	46 U	38 U
Aroclor-1248	40 U	56 UJ	38 U	46 U	38 U
Aroclor-1254	40 U	56 UJ	38 U	46 U	38 U
Aroclor-1260	40 U	56 UJ	38 U	46 U	38 U
Dieldrin	4 U	5.6 UJ	3.8 U	4.6 U	3.8 U
Endosulfan I	2.1 U	2.9 UJ	2 U	2.4 U	2 U
Endosulfan II	4 U	5.6 UJ	3.8 U	4.6 U	3.8 U
Endosulfan sulfate	4 U	5.6 UJ	1.9 J	4.6 U	3.8 U
Endrin	4 U	5.6 UJ	3.8 U	4.6 U	3.8 U
Endrin aldehyde	4 U	5.6 UJ	3.8 U	4.6 U	4.8 J
Endrin ketone	6.2 J	7.5 J	2.6 J	4.8 J	3.8 U
Heptachlor	2.1 U	2.9 UJ	2 U	2.4 U	2 U
Heptachlor epoxide	2.1 U	2.9 UJ	2 U	2.4 U	2 U
Methoxychlor	21 U	29 UJ	20 U	24 U	20 U
Toxaphene	210 U	290 UJ	200 U	240 U	200 U
alpha-BHC	2.1 U	2.9 UJ	2 U	2.4 U	2 U
alpha-Chlordane	2.1 U	2.9 UJ	2 U	2.4 U	2 U
beta-BHC	2.1 U	2.9 UJ	2 U	2.4 U	2 U
delta-BHC	2.1 U	2.9 UJ	2 U	2.4 U	2 U
gamma-BHC (Lindane)	2.1 U	2.9 UJ	2 U	2.4 U	2 U
gamma-Chlordane	2.1 U	2.9 UJ	2 U	2.4 U	2 U
Total Metals (MG/KG)					
Aluminum	1,210	1,390	1,050	1,420	1,770
Antimony	5.3 UJ	7 UJ	0.18 UJ	0.44 UJ	0.046 UJ
Arsenic	0.33 U	0.35 U	0.25 U	0.41 U	0.44 U
Barium	20.8	16.3 J	12.4 J	16.5 J	18.4
Beryllium	0.03 J	0.03 J	0.024 J	0.029 J	0.037 J
Cadmium	0.061 U	0.065 U	0.4 U	0.02 U	0.044 U
Calcium	2,740	1,220	969	1,370	1,750
Chromium	1.7	2.5	2.1	2.2	2.4
Cobalt	0.18 U	0.21 U	0.16 U	0.22 U	0.26 J
Copper	5.7 U	6.1 U	4.1 U	5.5 U	5 U
Iron	972	895	747	937	1,290
Lead	8.8	10.1	8.9	10.7	13.9
Magnesium	219 J	251 J	188 J	240 J	207 J
Manganese	35.5	25.9	9.6	11.1	20.3
Mercury	0.047 J-	0.066 J-	0.13 J-	0.16 J-	0.076 J-
Nickel	1.1 J	1.2 J	0.89 J	1.3 J	1.2 J
Potassium	167 J	181 J	165 J	161 J	137 J
Selenium	0.86 U	0.42 U	0.49 U	0.7 U	0.67 U
Silver	0.88 U	0.032 U	0.053 U	0.08 U	0.028 U
Sodium	79.4 J	46.6 U	39.8 U	58 U	52.9 U
Thallium	2.2 U	0.14 U	2 U	2.5 U	0.16 U
Vanadium	3.2 J	3.3 J	2.6 J	3.3 J	4.3
Zinc	15	16.2	11.4	16.4	11.6

Notes:
U- Analyte not detected
J- Reported value is estimated
J- - Reported value is biased low
UJ- Analyte not detected. Quantiation limit is imprecise
NA- Not analyzed
Shading represents detection

Site 95
Surface Soil Raw Analytical Data
October 2006

Station ID	IR95C-IS100			IR95C-IS101			IR95C-IS102		IR95C-IS103	IR95C-IS104	IR95C-IS105	IR95C-IS106	IR95C-IS107	IR95C-IS108	IR95C-IS109
Sample ID	IR95C-IS100-0-1-06D-2	IR95C-IS100-0-1-06D-1	IR95C-IS100D-0-1-06D-1	IR95C-IS101-0-1-06D-2	IR95C-IS101D-0-1-06D-2	IR95C-IS101-0-1-06D-1	IR95C-IS102-0-1-06D-2	IR95C-IS102-0-1-06D-1	IR95C-IS103-0-1-06D-2	IR95C-IS104-0-1-06D-2	IR95C-IS105-0-1-06D-2	IR95C-IS106-0-1-06D-2	IR95C-IS107-0-1-06D-2	IR95C-IS108-0-1-06D-2	IR95C-IS109-0-1-06D-2
Sample Date	10/02/06	10/03/06	10/03/06	10/02/06	10/02/06	10/03/06	10/02/06	10/03/06	10/02/06	10/02/06	10/02/06	10/02/06	10/02/06	10/02/06	10/02/06
Chemical Name															
Volatile Organic Compounds (UG/KG)															
1,1,1-Trichloroethane	NA	15 U	14 U	NA	NA	18 U	NA	13 U	NA	NA	NA	NA	NA	NA	NA
1,1,2,2-Tetrachloroethane	NA	15 U	14 U	NA	NA	18 U	NA	13 U	NA	NA	NA	NA	NA	NA	NA
1,1,2-Trichloro-1,2,2-trifluoroethane(Freon-113)	NA	15 U	14 U	NA	NA	18 U	NA	13 U	NA	NA	NA	NA	NA	NA	NA
1,1,2-Trichloroethane	NA	15 U	14 U	NA	NA	18 U	NA	13 U	NA	NA	NA	NA	NA	NA	NA
1,1-Dichloroethane	NA	15 U	14 U	NA	NA	18 U	NA	13 U	NA	NA	NA	NA	NA	NA	NA
1,1-Dichloroethene	NA	15 U	14 U	NA	NA	18 U	NA	13 U	NA	NA	NA	NA	NA	NA	NA
1,2,4-Trichlorobenzene	NA	15 U	14 U	NA	NA	18 U	NA	13 U	NA	NA	NA	NA	NA	NA	NA
1,2-Dibromo-3-chloropropane	NA	15 U	14 U	NA	NA	18 U	NA	13 U	NA	NA	NA	NA	NA	NA	NA
1,2-Dibromoethane	NA	15 U	14 U	NA	NA	18 U	NA	13 U	NA	NA	NA	NA	NA	NA	NA
1,2-Dichlorobenzene	NA	15 U	14 U	NA	NA	18 U	NA	13 U	NA	NA	NA	NA	NA	NA	NA
1,2-Dichloroethane	NA	15 U	14 U	NA	NA	18 U	NA	13 U	NA	NA	NA	NA	NA	NA	NA
1,2-Dichloropropane	NA	15 U	14 U	NA	NA	18 U	NA	13 U	NA	NA	NA	NA	NA	NA	NA
1,3-Dichlorobenzene	NA	15 U	14 U	NA	NA	18 U	NA	13 U	NA	NA	NA	NA	NA	NA	NA
1,4-Dichlorobenzene	NA	15 U	14 U	NA	NA	18 U	NA	13 U	NA	NA	NA	NA	NA	NA	NA
2-Butanone	NA	15 U	14 U	NA	NA	18 U	NA	13 U	NA	NA	NA	NA	NA	NA	NA
2-Hexanone	NA	15 U	14 U	NA	NA	18 U	NA	13 U	NA	NA	NA	NA	NA	NA	NA
4-Methyl-2-pentanone	NA	15 U	14 U	NA	NA	18 U	NA	13 U	NA	NA	NA	NA	NA	NA	NA
Acetone	NA	140	130	NA	NA	70	NA	13 U	NA	NA	NA	NA	NA	NA	NA
Benzene	NA	15 U	14 U	NA	NA	18 U	NA	13 U	NA	NA	NA	NA	NA	NA	NA
Bromodichloromethane	NA	15 U	14 U	NA	NA	18 U	NA	13 U	NA	NA	NA	NA	NA	NA	NA
Bromoform	NA	15 U	14 U	NA	NA	18 U	NA	13 U	NA	NA	NA	NA	NA	NA	NA
Bromomethane	NA	15 U	14 U	NA	NA	18 U	NA	13 U	NA	NA	NA	NA	NA	NA	NA
Carbon disulfide	NA	15 U	14 U	NA	NA	18 U	NA	13 U	NA	NA	NA	NA	NA	NA	NA
Carbon tetrachloride	NA	15 U	14 U	NA	NA	18 U	NA	13 U	NA	NA	NA	NA	NA	NA	NA
Chlorobenzene	NA	15 U	14 U	NA	NA	18 U	NA	13 U	NA	NA	NA	NA	NA	NA	NA
Chloroethane	NA	15 U	14 U	NA	NA	18 U	NA	13 U	NA	NA	NA	NA	NA	NA	NA
Chloroform	NA	15 U	14 U	NA	NA	18 U	NA	13 U	NA	NA	NA	NA	NA	NA	NA
Chloromethane	NA	15 U	14 U	NA	NA	18 U	NA	13 U	NA	NA	NA	NA	NA	NA	NA
Cyclohexane	NA	15 U	14 U	NA	NA	18 U	NA	13 U	NA	NA	NA	NA	NA	NA	NA
Dibromochloromethane	NA	15 U	14 U	NA	NA	18 U	NA	13 U	NA	NA	NA	NA	NA	NA	NA
Dichlorodifluoromethane (Freon-12)	NA	15 U	14 U	NA	NA	18 U	NA	13 U	NA	NA	NA	NA	NA	NA	NA
Ethylbenzene	NA	15 U	14 U	NA	NA	18 U	NA	13 U	NA	NA	NA	NA	NA	NA	NA
Isopropylbenzene	NA	15 U	14 U	NA	NA	18 U	NA	13 U	NA	NA	NA	NA	NA	NA	NA
Methyl acetate	NA	15 UJ	14 UJ	NA	NA	18 UJ	NA	13 UJ	NA	NA	NA	NA	NA	NA	NA
Methyl-tert-butyl ether (MTBE)	NA	15 U	14 U	NA	NA	18 U	NA	13 U	NA	NA	NA	NA	NA	NA	NA
Methylcyclohexane	NA	15 U	14 U	NA	NA	18 U	NA	13 U	NA	NA	NA	NA	NA	NA	NA
Methylene chloride	NA	15 U	14 U	NA	NA	18 U	NA	13 U	NA	NA	NA	NA	NA	NA	NA
Styrene	NA	15 U	14 U	NA	NA	18 U	NA	13 U	NA	NA	NA	NA	NA	NA	NA
Tetrachloroethene	NA	15 U	14 U	NA	NA	18 U	NA	13 U	NA	NA	NA	NA	NA	NA	NA
Toluene	NA	15 U	14 U	NA	NA	18 U	NA	13 U	NA	NA	NA	NA	NA	NA	NA
Trichloroethene	NA	15 U	14 U	NA	NA	18 U	NA	13 U	NA	NA	NA	NA	NA	NA	NA
Trichlorofluoromethane(Freon-11)	NA	15 UJ	14 UJ	NA	NA	18 UJ	NA	13 UJ	NA	NA	NA	NA	NA	NA	NA
Vinyl chloride	NA	15 U	14 U	NA	NA	18 U	NA	13 U	NA	NA	NA	NA	NA	NA	NA
Xylene, total	NA	15 U	14 U	NA	NA	18 U	NA	13 U	NA	NA	NA	NA	NA	NA	NA
cis-1,2-Dichloroethene	NA	15 U	14 U	NA	NA	18 U	NA	13 U	NA	NA	NA	NA	NA	NA	NA
cis-1,3-Dichloropropene	NA	15 U	14 U	NA	NA	18 U	NA	13 U	NA	NA	NA	NA	NA	NA	NA
trans-1,2-Dichloroethene	NA	15 U	14 U	NA	NA	18 U	NA	13 U	NA	NA	NA	NA	NA	NA	NA
trans-1,3-Dichloropropene	NA	15 U	14 U	NA	NA	18 U	NA	13 U	NA	NA	NA	NA	NA	NA	NA

Site 95
Surface Soil Raw Analytical Data
October 2006

Station ID	IR95C-IS110	IR95C-IS111	IR95C-IS112		IR95C-IS113	IR95C-IS114	IR95C-IS115	IR95C-IS116	IR95C-IS117	IR95C-IS118	IR95C-IS119	IR95C-IS120	IR95C-IS121	IR95C-IS122	IR95C-IS123
Sample ID	IR95C-IS110-0-1-06D-2	IR95C-IS111-0-1-06D-2	IR95C-IS112-0-1-06D-2	IR95C-IS112D-0-1-06D-2	IR95C-IS113-0-1-06D-2	IR95C-IS114-0-1-06D-2	IR95C-IS115-0-1-06D-2	IR95C-IS116-0-1-06D-2	IR95C-IS117-0-1-06D-2	IR95C-IS118-0-1-06D-2	IR95C-IS119-0-1-06D-2	IR95C-IS120-0-1-06D-2	IR95C-IS121-0-1-06D-2	IR95C-IS122-0-1-06D-2	IR95C-IS123-0-1-06D-2
Sample Date	10/02/06	10/02/06	10/02/06	10/02/06	10/02/06	10/02/06	10/02/06	10/02/06	10/02/06	10/02/06	10/02/06	10/02/06	10/02/06	10/02/06	10/02/06
Chemical Name															
Volatile Organic Compounds (UG/KG)															
1,1,1-Trichloroethane	NA	NA	NA	NA	NA	NA	NA	NA	NA	NA	NA	NA	NA	NA	NA
1,1,2,2-Tetrachloroethane	NA	NA	NA	NA	NA	NA	NA	NA	NA	NA	NA	NA	NA	NA	NA
1,1,2-Trichloro-1,2,2-trifluoroethane(Freon-113)	NA	NA	NA	NA	NA	NA	NA	NA	NA	NA	NA	NA	NA	NA	NA
1,1,2-Trichloroethane	NA	NA	NA	NA	NA	NA	NA	NA	NA	NA	NA	NA	NA	NA	NA
1,1-Dichloroethane	NA	NA	NA	NA	NA	NA	NA	NA	NA	NA	NA	NA	NA	NA	NA
1,1-Dichloroethene	NA	NA	NA	NA	NA	NA	NA	NA	NA	NA	NA	NA	NA	NA	NA
1,2,4-Trichlorobenzene	NA	NA	NA	NA	NA	NA	NA	NA	NA	NA	NA	NA	NA	NA	NA
1,2-Dibromo-3-chloropropane	NA	NA	NA	NA	NA	NA	NA	NA	NA	NA	NA	NA	NA	NA	NA
1,2-Dibromoethane	NA	NA	NA	NA	NA	NA	NA	NA	NA	NA	NA	NA	NA	NA	NA
1,2-Dichlorobenzene	NA	NA	NA	NA	NA	NA	NA	NA	NA	NA	NA	NA	NA	NA	NA
1,2-Dichloroethane	NA	NA	NA	NA	NA	NA	NA	NA	NA	NA	NA	NA	NA	NA	NA
1,2-Dichloropropane	NA	NA	NA	NA	NA	NA	NA	NA	NA	NA	NA	NA	NA	NA	NA
1,3-Dichlorobenzene	NA	NA	NA	NA	NA	NA	NA	NA	NA	NA	NA	NA	NA	NA	NA
1,4-Dichlorobenzene	NA	NA	NA	NA	NA	NA	NA	NA	NA	NA	NA	NA	NA	NA	NA
2-Butanone	NA	NA	NA	NA	NA	NA	NA	NA	NA	NA	NA	NA	NA	NA	NA
2-Hexanone	NA	NA	NA	NA	NA	NA	NA	NA	NA	NA	NA	NA	NA	NA	NA
4-Methyl-2-pentanone	NA	NA	NA	NA	NA	NA	NA	NA	NA	NA	NA	NA	NA	NA	NA
Acetone	NA	NA	NA	NA	NA	NA	NA	NA	NA	NA	NA	NA	NA	NA	NA
Benzene	NA	NA	NA	NA	NA	NA	NA	NA	NA	NA	NA	NA	NA	NA	NA
Bromodichloromethane	NA	NA	NA	NA	NA	NA	NA	NA	NA	NA	NA	NA	NA	NA	NA
Bromoform	NA	NA	NA	NA	NA	NA	NA	NA	NA	NA	NA	NA	NA	NA	NA
Bromomethane	NA	NA	NA	NA	NA	NA	NA	NA	NA	NA	NA	NA	NA	NA	NA
Carbon disulfide	NA	NA	NA	NA	NA	NA	NA	NA	NA	NA	NA	NA	NA	NA	NA
Carbon tetrachloride	NA	NA	NA	NA	NA	NA	NA	NA	NA	NA	NA	NA	NA	NA	NA
Chlorobenzene	NA	NA	NA	NA	NA	NA	NA	NA	NA	NA	NA	NA	NA	NA	NA
Chloroethane	NA	NA	NA	NA	NA	NA	NA	NA	NA	NA	NA	NA	NA	NA	NA
Chloroform	NA	NA	NA	NA	NA	NA	NA	NA	NA	NA	NA	NA	NA	NA	NA
Chloromethane	NA	NA	NA	NA	NA	NA	NA	NA	NA	NA	NA	NA	NA	NA	NA
Cyclohexane	NA	NA	NA	NA	NA	NA	NA	NA	NA	NA	NA	NA	NA	NA	NA
Dibromochloromethane	NA	NA	NA	NA	NA	NA	NA	NA	NA	NA	NA	NA	NA	NA	NA
Dichlorodifluoromethane (Freon-12)	NA	NA	NA	NA	NA	NA	NA	NA	NA	NA	NA	NA	NA	NA	NA
Ethylbenzene	NA	NA	NA	NA	NA	NA	NA	NA	NA	NA	NA	NA	NA	NA	NA
Isopropylbenzene	NA	NA	NA	NA	NA	NA	NA	NA	NA	NA	NA	NA	NA	NA	NA
Methyl acetate	NA	NA	NA	NA	NA	NA	NA	NA	NA	NA	NA	NA	NA	NA	NA
Methyl-tert-butyl ether (MTBE)	NA	NA	NA	NA	NA	NA	NA	NA	NA	NA	NA	NA	NA	NA	NA
Methylcyclohexane	NA	NA	NA	NA	NA	NA	NA	NA	NA	NA	NA	NA	NA	NA	NA
Methylene chloride	NA	NA	NA	NA	NA	NA	NA	NA	NA	NA	NA	NA	NA	NA	NA
Styrene	NA	NA	NA	NA	NA	NA	NA	NA	NA	NA	NA	NA	NA	NA	NA
Tetrachloroethene	NA	NA	NA	NA	NA	NA	NA	NA	NA	NA	NA	NA	NA	NA	NA
Toluene	NA	NA	NA	NA	NA	NA	NA	NA	NA	NA	NA	NA	NA	NA	NA
Trichloroethene	NA	NA	NA	NA	NA	NA	NA	NA	NA	NA	NA	NA	NA	NA	NA
Trichlorofluoromethane(Freon-11)	NA	NA	NA	NA	NA	NA	NA	NA	NA	NA	NA	NA	NA	NA	NA
Vinyl chloride	NA	NA	NA	NA	NA	NA	NA	NA	NA	NA	NA	NA	NA	NA	NA
Xylene, total	NA	NA	NA	NA	NA	NA	NA	NA	NA	NA	NA	NA	NA	NA	NA
cis-1,2-Dichloroethene	NA	NA	NA	NA	NA	NA	NA	NA	NA	NA	NA	NA	NA	NA	NA
cis-1,3-Dichloropropene	NA	NA	NA	NA	NA	NA	NA	NA	NA	NA	NA	NA	NA	NA	NA
trans-1,2-Dichloroethene	NA	NA	NA	NA	NA	NA	NA	NA	NA	NA	NA	NA	NA	NA	NA
trans-1,3-Dichloropropene	NA	NA	NA	NA	NA	NA	NA	NA	NA	NA	NA	NA	NA	NA	NA

Site 95
Surface Soil Raw Analytical Data
October 2006

Station ID	IR95C-IS124	IR95C-IS125	IR95C-IS126		IR95C-IS127
Sample ID	IR95C-IS124-0-1-06D-2	IR95C-IS125-0-1-06D-2	IR95C-IS126-0-1-06D-2	IR95C-IS126D-0-1-06D-2	IR95C-IS127-0-1-06D-2
Sample Date	10/02/06	10/02/06	10/02/06	10/02/06	10/02/06
Chemical Name					
Volatile Organic Compounds (UG/KG)					
1,1,1-Trichloroethane	NA	NA	NA	NA	NA
1,1,2,2-Tetrachloroethane	NA	NA	NA	NA	NA
1,1,2-Trichloro-1,2,2-trifluoroethane(Freon-113)	NA	NA	NA	NA	NA
1,1,2-Trichloroethane	NA	NA	NA	NA	NA
1,1-Dichloroethane	NA	NA	NA	NA	NA
1,1-Dichloroethene	NA	NA	NA	NA	NA
1,2,4-Trichlorobenzene	NA	NA	NA	NA	NA
1,2-Dibromo-3-chloropropane	NA	NA	NA	NA	NA
1,2-Dibromoethane	NA	NA	NA	NA	NA
1,2-Dichlorobenzene	NA	NA	NA	NA	NA
1,2-Dichloroethane	NA	NA	NA	NA	NA
1,2-Dichloropropane	NA	NA	NA	NA	NA
1,3-Dichlorobenzene	NA	NA	NA	NA	NA
1,4-Dichlorobenzene	NA	NA	NA	NA	NA
2-Butanone	NA	NA	NA	NA	NA
2-Hexanone	NA	NA	NA	NA	NA
4-Methyl-2-pentanone	NA	NA	NA	NA	NA
Acetone	NA	NA	NA	NA	NA
Benzene	NA	NA	NA	NA	NA
Bromodichloromethane	NA	NA	NA	NA	NA
Bromoform	NA	NA	NA	NA	NA
Bromomethane	NA	NA	NA	NA	NA
Carbon disulfide	NA	NA	NA	NA	NA
Carbon tetrachloride	NA	NA	NA	NA	NA
Chlorobenzene	NA	NA	NA	NA	NA
Chloroethane	NA	NA	NA	NA	NA
Chloroform	NA	NA	NA	NA	NA
Chloromethane	NA	NA	NA	NA	NA
Cyclohexane	NA	NA	NA	NA	NA
Dibromochloromethane	NA	NA	NA	NA	NA
Dichlorodifluoromethane (Freon-12)	NA	NA	NA	NA	NA
Ethylbenzene	NA	NA	NA	NA	NA
Isopropylbenzene	NA	NA	NA	NA	NA
Methyl acetate	NA	NA	NA	NA	NA
Methyl-tert-butyl ether (MTBE)	NA	NA	NA	NA	NA
Methylcyclohexane	NA	NA	NA	NA	NA
Methylene chloride	NA	NA	NA	NA	NA
Styrene	NA	NA	NA	NA	NA
Tetrachloroethene	NA	NA	NA	NA	NA
Toluene	NA	NA	NA	NA	NA
Trichloroethene	NA	NA	NA	NA	NA
Trichlorofluoromethane(Freon-11)	NA	NA	NA	NA	NA
Vinyl chloride	NA	NA	NA	NA	NA
Xylene, total	NA	NA	NA	NA	NA
cis-1,2-Dichloroethene	NA	NA	NA	NA	NA
cis-1,3-Dichloropropene	NA	NA	NA	NA	NA
trans-1,2-Dichloroethene	NA	NA	NA	NA	NA
trans-1,3-Dichloropropene	NA	NA	NA	NA	NA

Site 95
Surface Soil Raw Analytical Data
October 2006

Station ID	IR95C-IS100			IR95C-IS101			IR95C-IS102		IR95C-IS103	IR95C-IS104	IR95C-IS105	IR95C-IS106	IR95C-IS107	IR95C-IS108	IR95C-IS109
Sample ID	IR95C-IS100-0-1-06D-2	IR95C-IS100-0-1-06D-1	IR95C-IS100D-0-1-06D-1	IR95C-IS101-0-1-06D-2	IR95C-IS101D-0-1-06D-2	IR95C-IS101-0-1-06D-1	IR95C-IS102-0-1-06D-2	IR95C-IS102-0-1-06D-1	IR95C-IS103-0-1-06D-2	IR95C-IS104-0-1-06D-2	IR95C-IS105-0-1-06D-2	IR95C-IS106-0-1-06D-2	IR95C-IS107-0-1-06D-2	IR95C-IS108-0-1-06D-2	IR95C-IS109-0-1-06D-2
Sample Date	10/02/06	10/03/06	10/03/06	10/02/06	10/02/06	10/03/06	10/02/06	10/03/06	10/02/06	10/02/06	10/02/06	10/02/06	10/02/06	10/02/06	10/02/06
Chemical Name															
Semi-volatile Organic Compounds (UG/KG)															
1,1-Biphenyl	360 U	NA	NA	420 U	410 U	NA	340 U	NA	340 U	380 U	350 U	350 U	350 U	370 U	350 U
2,2'-Oxybis(1-chloropropane)	360 U	NA	NA	420 U	410 U	NA	340 U	NA	340 U	380 U	350 U	350 U	350 U	370 U	350 U
2,4,5-Trichlorophenol	910 U	NA	NA	1,100 U	1,000 U	NA	860 U	NA	860 U	960 U	890 U	870 U	880 U	930 U	880 U
2,4,6-Trichlorophenol	360 U	NA	NA	420 U	410 U	NA	340 U	NA	340 U	380 U	350 U	350 U	350 U	370 U	350 U
2,4-Dichlorophenol	360 U	NA	NA	420 U	410 U	NA	340 U	NA	340 U	380 U	350 U	350 U	350 U	370 U	350 U
2,4-Dimethylphenol	360 UJ	NA	NA	420 UJ	410 U	NA	340 U	NA	340 UJ	380 U	350 U	350 U	350 UJ	370 UJ	350 U
2,4-Dinitrophenol	910 R	NA	NA	1,100 R	1,000 UJ	NA	860 UJ	NA	860 R	960 R	890 R	870 UJ	880 R	930 R	880 UJ
2,4-Dinitrotoluene	360 U	NA	NA	420 U	410 U	NA	340 U	NA	340 U	380 U	350 U	350 U	350 U	370 U	350 U
2,6-Dinitrotoluene	360 U	NA	NA	420 U	410 U	NA	340 U	NA	340 U	380 U	350 U	350 U	350 U	370 U	350 U
2-Chloronaphthalene	360 U	NA	NA	420 U	410 U	NA	340 U	NA	340 U	380 U	350 U	350 U	350 U	370 U	350 U
2-Chlorophenol	360 U	NA	NA	420 U	410 U	NA	340 U	NA	340 U	380 U	350 U	350 U	350 U	370 U	350 U
2-Methylnaphthalene	360 U	NA	NA	420 U	410 U	NA	340 U	NA	340 U	380 U	350 U	350 U	350 U	370 U	350 U
2-Methylphenol	360 U	NA	NA	420 U	410 U	NA	340 U	NA	340 U	380 U	350 U	350 U	350 U	370 U	350 U
2-Nitroaniline	910 U	NA	NA	1,100 U	1,000 U	NA	860 U	NA	860 U	960 U	890 U	870 U	880 U	930 U	880 U
2-Nitrophenol	360 U	NA	NA	420 U	410 U	NA	340 U	NA	340 U	380 U	350 U	350 U	350 U	370 U	350 U
3,3'-Dichlorobenzidine	360 U	NA	NA	420 U	410 U	NA	340 U	NA	340 U	380 U	350 U	350 U	350 UJ	370 UJ	350 U
3-Nitroaniline	910 U	NA	NA	1,100 U	1,000 U	NA	860 U	NA	860 U	960 U	890 U	870 U	880 U	930 U	880 U
4,6-Dinitro-2-methylphenol	910 UJ	NA	NA	1,100 UJ	1,000 UJ	NA	860 UJ	NA	860 UJ	960 UJ	890 UJ	870 UJ	880 UJ	930 UJ	880 UJ
4-Bromophenyl-phenylether	360 U	NA	NA	420 U	410 U	NA	340 U	NA	340 U	380 U	350 U	350 U	350 U	370 U	350 U
4-Chloro-3-methylphenol	360 U	NA	NA	420 U	410 U	NA	340 U	NA	340 U	380 U	350 U	350 U	350 U	370 U	350 U
4-Chloroaniline	360 UJ	NA	NA	420 UJ	410 UJ	NA	340 UJ	NA	340 UJ	380 UJ	350 UJ	350 UJ	350 UJ	370 UJ	350 UJ
4-Chlorophenyl-phenylether	360 U	NA	NA	420 U	410 U	NA	340 U	NA	340 U	380 U	350 U	350 U	350 U	370 U	350 U
4-Methylphenol	360 U	NA	NA	420 U	410 U	NA	340 U	NA	340 U	380 U	350 U	350 U	350 U	370 U	350 U
4-Nitroaniline	910 U	NA	NA	1,100 U	1,000 U	NA	860 U	NA	860 U	960 U	890 U	870 U	880 U	930 U	880 U
4-Nitrophenol	910 UJ	NA	NA	1,100 UJ	1,000 U	NA	860 U	NA	860 UJ	960 U	890 U	870 U	880 U	930 U	880 U
Acenaphthene	360 U	NA	NA	420 U	410 U	NA	340 U	NA	340 U	380 U	350 U	350 U	350 U	370 U	350 U
Acenaphthylene	360 U	NA	NA	420 U	410 U	NA	340 U	NA	340 U	380 U	350 U	350 U	350 U	370 U	350 U
Acetophenone	360 U	NA	NA	420 U	410 U	NA	340 U	NA	340 U	380 U	350 U	350 U	350 U	370 U	350 U
Anthracene	360 U	NA	NA	420 U	410 U	NA	340 U	NA	340 U	380 U	350 U	350 U	350 U	370 U	350 U
Atrazine	360 U	NA	NA	420 U	410 U	NA	340 U	NA	340 U	380 U	350 U	350 U	350 U	370 U	350 U
Benzaldehyde	54 J	NA	NA	100 J	110 J	NA	340 UJ	NA	340 UJ	380 UJ	38 J	70 J	350 U	70 J	350 U
Benzo(a)anthracene	360 U	NA	NA	420 U	410 U	NA	340 U	NA	340 U	380 U	350 U	350 U	350 U	370 U	350 U
Benzo(a)pyrene	360 UJ	NA	NA	420 U	410 UJ	NA	340 U	NA	340 U	380 U	350 U	350 UJ	350 U	370 U	350 U
Benzo(b)fluoranthene	360 UJ	NA	NA	420 U	410 UJ	NA	340 U	NA	340 U	380 U	350 U	350 UJ	350 U	370 U	350 U
Benzo(g,h,i)perylene	360 UJ	NA	NA	420 UJ	410 UJ	NA	340 U	NA	340 UJ	380 U	350 U	350 UJ	350 U	370 U	350 U
Benzo(k)fluoranthene	360 UJ	NA	NA	420 U	410 UJ	NA	340 U	NA	340 U	380 U	350 U	350 UJ	350 U	370 U	350 U
Butylbenzylphthalate	360 U	NA	NA	420 U	410 U	NA	340 U	NA	340 U	380 U	350 U	350 U	350 U	370 U	350 U
Caprolactam	360 UJ	NA	NA	420 UJ	410 UJ	NA	340 UJ	NA	340 UJ	380 UJ	350 UJ	350 UJ	350 UJ	370 UJ	350 UJ
Carbazole	360 U	NA	NA	420 U	410 U	NA	340 U	NA	340 U	380 U	350 U	350 U	350 U	370 U	350 U
Chrysene	360 U	NA	NA	420 U	410 U	NA	340 U	NA	340 U	380 U	350 U	350 U	350 U	370 U	350 U
Di-n-butylphthalate	360 U	NA	NA	44 J	42 J	NA	340 U	NA	39 J	51 J	96 J	350 U	350 U	370 U	350 U
Di-n-octylphthalate	360 UJ	NA	NA	420 U	410 UJ	NA	340 UJ	NA	340 U	380 U	350 U	350 UJ	350 U	370 U	350 UJ
Dibenz(a,h)anthracene	360 UJ	NA	NA	420 UJ	410 UJ	NA	340 U	NA	340 UJ	380 U	350 U	350 UJ	350 U	370 U	350 U
Dibenzofuran	360 U	NA	NA	420 U	410 U	NA	340 U	NA	340 U	380 U	350 U	350 U	350 U	370 U	350 U
Diethylphthalate	360 U	NA	NA	420 U	410 U	NA	340 U	NA	340 U	380 U	350 U	350 U	350 U	370 U	350 U
Dimethyl phthalate	360 U	NA	NA	420 U	410 U	NA	340 U	NA	340 U	380 U	350 U	350 U	350 U	370 U	350 U
Fluoranthene	360 U	NA	NA	420 U	410 U	NA	340 U	NA	340 U	380 U	350 U	350 U	350 U	370 U	350 U
Fluorene	360 U	NA	NA	420 U	410 U	NA	340 U	NA	340 U	380 U	350 U	350 U	350 U	370 U	350 U
Hexachlorobenzene	360 U	NA	NA	420 U	410 U	NA	340 U	NA	340 U	380 U	350 U	350 U	350 U	370 U	350 U
Hexachlorobutadiene	360 U	NA	NA	420 U	410 U	NA	340 U	NA	340 U	380 U	350 U	350 U	350 U	370 U	350 U
Hexachlorocyclopentadiene	360 UJ	NA	NA	420 UJ	410 UJ	NA	340 UJ	NA	340 UJ	380 UJ	350 UJ	350 UJ	350 UJ	370 UJ	350 UJ
Hexachloroethane	360 U	NA	NA	420 U	410 U	NA	340 U	NA	340 U	380 U	350 U	350 U	350 U	370 U	350 U
Indeno(1,2,3-cd)pyrene	360 UJ	NA	NA	420 U	410 UJ	NA	340 U	NA	340 U	380 U	350 U	350 UJ	350 U	370 U	350 U
Isophorone	360 U	NA	NA	420 U	410 U	NA	340 U	NA	340 U	380 U	350 U	350 U	350 U	370 U	350 U
Naphthalene	360 U	NA	NA	420 U	410 UJ	NA	340 U	NA	340 U	380 U	350 U	350 U	350 U	370 U	350 U
Nitrobenzene	360 U	NA	NA	420 U	410 U	NA	340 U	NA	340 U	380 U	350 U	350 U	350 U	370 U	350 U
Pentachlorophenol	910 U	NA	NA	1,100 U	1,000 UJ	NA	860 UJ	NA	860 U	960 UJ	890 UJ	870 UJ	880 UJ	930 UJ	880 UJ
Phenanthrene	360 U	NA	NA	420 U	410 U	NA	340 U	NA	340 U	380 U	350 U	350 U	350 U	370 U	350 U
Phenol	360 U	NA	NA	420 U	410 U	NA	340 U	NA	340 U	380 U	350 U	350 U	350 U	370 U	350 U
Pyrene	360 U	NA	NA	420 U	410 U	NA	340 U	NA	340 U	380 U	350 U	350 U	350 U	370 U	350 U
bis(2-Chloroethoxy)methane	360 U	NA	NA	420 U	410 U	NA	340 U	NA	340 U	380 U	350 U	350 U	350 U	370 U	350 U
bis(2-Chloroethyl)ether	360 U	NA	NA	420 U	410 U	NA	340 U	NA	340 U	380 U	350 U	350 U	350 U	370 U	350 U
bis(2-Ethylhexyl)phthalate	120 UJ	NA	NA	110 U	140 UJ	NA	110 J	NA	100 U	150 U	120 U	100 UJ	70 J	77 J	84 J
n-Nitroso-di-n-propylamine	360 U	NA	NA	420 U	410 U	NA	340 U	NA	340 U	380 U	350 U	350 U	350 U	370 U	350 U
n-Nitrosodiphenylamine	360 U	NA	NA	420 U	410 U	NA	340 U	NA	340 U	380 U	350 U	350 U	350 U	370 U	350 U

Site 95
Surface Soil Raw Analytical Data
October 2006

Station ID	IR95C-IS110	IR95C-IS111	IR95C-IS112		IR95C-IS113	IR95C-IS114	IR95C-IS115	IR95C-IS116	IR95C-IS117	IR95C-IS118	IR95C-IS119	IR95C-IS120	IR95C-IS121	IR95C-IS122	IR95C-IS123
Sample ID	IR95C-IS110-0-1-06D-2	IR95C-IS111-0-1-06D-2	IR95C-IS112-0-1-06D-2	IR95C-IS112D-0-1-06D-2	IR95C-IS113-0-1-06D-2	IR95C-IS114-0-1-06D-2	IR95C-IS115-0-1-06D-2	IR95C-IS116-0-1-06D-2	IR95C-IS117-0-1-06D-2	IR95C-IS118-0-1-06D-2	IR95C-IS119-0-1-06D-2	IR95C-IS120-0-1-06D-2	IR95C-IS121-0-1-06D-2	IR95C-IS122-0-1-06D-2	IR95C-IS123-0-1-06D-2
Sample Date	10/02/06	10/02/06	10/02/06	10/02/06	10/02/06	10/02/06	10/02/06	10/02/06	10/02/06	10/02/06	10/02/06	10/02/06	10/02/06	10/02/06	10/02/06
Chemical Name															
Semi-volatile Organic Compounds (UG/KG)															
1,1-Biphenyl	360 U	350 U	350 U	350 U	350 U	340 U	340 U	350 U	370 U	400 U	360 U	390 U	580 U	350 U	410 U
2,2'-Oxybis(1-chloropropane)	360 U	350 U	350 U	350 U	350 U	340 U	340 U	350 U	370 U	400 U	360 U	390 U	580 U	350 U	410 U
2,4,5-Trichlorophenol	900 U	890 U	870 U	870 U	890 U	860 U	860 U	870 U	930 U	1,000 U	910 U	990 U	1,400 U	890 U	1,000 U
2,4,6-Trichlorophenol	360 U	350 U	350 U	350 U	350 U	340 U	340 U	350 U	370 U	400 U	360 U	390 U	580 U	350 U	410 U
2,4-Dichlorophenol	360 U	350 U	350 U	350 U	350 U	340 U	340 U	350 U	370 U	400 U	360 U	390 U	580 U	350 U	410 U
2,4-Dimethylphenol	360 UJ	350 UJ	350 U	350 U	350 U	340 UJ	340 U	350 U	370 U	400 U	360 UJ	390 UJ	580 UJ	350 U	410 UJ
2,4-Dinitrophenol	900 R	890 R	870 R	870 R	890 R	860 R	860 R	870 R	930 R	1,000 R	910 R	990 R	1,400 R	890 UJ	1,000 R
2,4-Dinitrotoluene	360 U	350 U	350 U	350 U	350 U	340 U	340 U	350 U	370 U	400 U	360 U	390 U	580 U	350 U	410 U
2,6-Dinitrotoluene	360 U	350 U	350 U	350 U	350 U	340 U	340 U	350 U	370 U	400 U	360 U	390 U	580 U	350 U	410 U
2-Chloronaphthalene	360 U	350 U	350 U	350 U	350 U	340 U	340 U	350 U	370 U	400 U	360 U	390 U	580 U	350 U	410 U
2-Chlorophenol	360 U	350 U	350 U	350 U	350 U	340 U	340 U	350 U	370 U	400 U	360 U	390 U	580 U	350 U	410 U
2-Methylnaphthalene	360 U	350 U	350 U	350 U	350 U	340 U	340 U	350 U	370 U	400 U	360 U	390 U	580 U	350 U	410 U
2-Methylphenol	360 U	350 U	350 U	350 U	350 U	340 U	340 U	350 U	370 U	400 U	360 U	390 U	580 U	350 U	410 U
2-Nitroaniline	900 U	890 U	870 U	870 U	890 U	860 U	860 U	870 U	930 U	1,000 U	910 U	990 U	1,400 U	890 U	1,000 U
2-Nitrophenol	360 U	350 U	350 U	350 U	350 U	340 U	340 U	350 U	370 U	400 U	360 U	390 U	580 U	350 U	410 U
3,3'-Dichlorobenzidine	360 U	350 UJ	350 U	350 U	350 U	340 U	340 U	350 U	370 U	400 U	360 UJ	390 UJ	580 UJ	350 U	410 U
3-Nitroaniline	900 U	890 U	870 U	870 U	890 U	860 U	860 U	870 U	930 U	1,000 U	910 U	990 U	1,400 U	890 U	1,000 U
4,6-Dinitro-2-methylphenol	900 UJ	890 UJ	870 UJ	870 UJ	890 UJ	860 UJ	860 UJ	870 UJ	930 UJ	1,000 UJ	910 UJ	990 UJ	1,400 UJ	890 UJ	1,000 UJ
4-Bromophenyl-phenylether	360 U	350 U	350 U	350 U	350 U	340 U	340 U	350 U	370 U	400 U	360 U	390 U	580 U	350 U	410 U
4-Chloro-3-methylphenol	360 U	350 U	350 U	350 U	350 U	340 U	340 U	350 U	370 U	400 U	360 U	390 U	580 U	350 U	410 U
4-Chloroaniline	360 UJ	350 UJ	350 UJ	350 UJ	350 UJ	340 UJ	340 UJ	350 UJ	370 UJ	400 UJ	360 UJ	390 UJ	580 UJ	350 UJ	410 UJ
4-Chlorophenyl-phenylether	360 U	350 U	350 U	350 U	350 U	340 U	340 U	350 U	370 U	400 U	360 U	390 U	580 U	350 U	410 U
4-Methylphenol	360 U	350 U	350 U	350 U	350 U	340 U	340 U	350 U	370 U	400 U	360 U	390 U	580 U	350 U	410 U
4-Nitroaniline	900 U	890 U	870 U	870 U	890 U	860 U	860 U	870 U	930 U	1,000 U	910 U	990 U	1,400 U	890 U	1,000 U
4-Nitrophenol	900 UJ	890 U	870 U	870 U	890 U	860 UJ	860 U	870 U	930 U	1,000 U	910 U	990 U	1,400 U	890 U	1,000 UJ
Acenaphthene	360 U	350 U	350 U	350 U	350 U	340 U	340 U	350 U	370 U	400 U	360 U	390 U	580 U	350 U	410 U
Acenaphthylene	360 U	350 U	350 U	350 U	350 U	340 U	340 U	350 U	370 U	400 U	360 U	390 U	580 U	350 U	130 J
Acetophenone	360 U	350 U	350 U	350 U	350 U	340 U	340 U	350 U	370 U	400 U	360 U	390 U	580 U	350 U	410 U
Anthracene	360 U	350 U	350 U	350 U	350 U	340 U	340 U	350 U	370 U	400 U	360 U	390 U	580 U	350 U	49 J
Atrazine	360 U	350 U	350 U	350 U	350 U	340 U	340 U	350 U	370 U	400 U	360 U	390 U	580 U	350 U	410 U
Benzaldehyde	360 UJ	350 U	350 UJ	350 UJ	350 UJ	340 UJ	340 UJ	350 UJ	370 UJ	400 UJ	360 U	80 J	150 J	350 UJ	72 J
Benzo(a)anthracene	360 U	350 U	350 U	350 U	350 U	340 U	340 U	350 U	370 U	400 U	360 U	390 U	580 U	350 U	230 J
Benzo(a)pyrene	360 U	350 U	350 U	350 U	350 U	340 U	340 U	350 U	370 U	400 UJ	360 U	390 U	580 U	350 U	530 J
Benzo(b)fluoranthene	360 U	350 U	350 U	350 U	350 U	340 U	340 U	350 U	370 U	400 UJ	360 U	390 U	580 U	350 U	880 J
Benzo(g,h,i)perylene	360 UJ	350 U	350 U	350 U	350 U	340 UJ	340 U	350 U	370 U	400 UJ	360 U	390 U	580 U	350 U	140 J
Benzo(k)fluoranthene	360 U	350 U	350 U	350 U	350 U	340 U	340 U	350 U	370 U	400 UJ	360 U	390 U	580 U	350 U	280 J
Butylbenzylphthalate	360 U	350 U	350 U	350 U	350 U	340 U	340 U	350 U	370 U	400 U	360 U	390 U	580 U	350 U	410 U
Caprolactam	360 UJ	350 UJ	350 UJ	350 UJ	350 UJ	340 UJ	340 UJ	350 UJ	370 UJ	400 UJ	360 UJ	390 UJ	580 UJ	350 UJ	410 UJ
Carbazole	360 U	350 U	350 U	350 U	350 U	340 U	340 U	350 U	370 U	400 U	360 U	390 U	580 U	350 U	410 U
Chrysene	360 U	350 U	350 U	350 U	350 U	340 U	340 U	350 U	370 U	400 U	360 U	390 U	580 U	350 U	420
Di-n-butylphthalate	42 J	350 U	350 U	350 U	67 J	60 J	35 J	350 U	49 J	400 U	360 U	390 U	580 U	350 U	51 J
Di-n-octylphthalate	360 U	350 U	350 U	350 U	350 U	340 U	340 U	350 U	370 U	400 UJ	360 U	390 U	580 U	350 UJ	410 UJ
Dibenz(a,h)anthracene	360 UJ	350 U	350 U	350 U	350 U	340 UJ	340 U	350 U	370 U	400 UJ	360 U	390 U	580 U	350 U	410 UJ
Dibenzofuran	360 U	350 U	350 U	350 U	350 U	340 U	340 U	350 U	370 U	400 U	360 U	390 U	580 U	350 U	410 U
Diethylphthalate	360 U	350 U	350 U	350 U	350 U	340 U	340 U	350 U	370 U	400 U	360 U	390 U	580 U	350 U	410 U
Dimethyl phthalate	360 U	350 U	350 U	350 U	350 U	340 U	340 U	350 U	370 U	400 U	360 U	390 U	580 U	350 U	410 U
Fluoranthene	360 U	350 U	350 U	350 U	350 U	340 U	340 U	350 U	370 U	400 U	360 U	390 U	580 U	350 U	1,500
Fluorene	360 U	350 U	350 U	350 U	350 U	340 U	340 U	350 U	370 U	400 U	360 U	390 U	580 U	350 U	410 U
Hexachlorobenzene	360 U	350 U	350 U	350 U	350 U	340 U	340 U	350 U	370 U	400 U	360 U	390 U	580 U	350 U	410 U
Hexachlorobutadiene	360 U	350 U	350 U	350 U	350 U	340 U	340 U	350 U	370 U	400 U	360 U	390 U	580 U	350 U	410 U
Hexachlorocyclopentadiene	360 UJ	350 UJ	350 UJ	350 UJ	350 UJ	340 UJ	340 UJ	350 UJ	370 UJ	400 UJ	360 UJ	390 UJ	580 UJ	350 UJ	410 UJ
Hexachloroethane	360 U	350 U	350 U	350 U	350 U	340 U	340 U	350 U	370 U	400 U	360 U	390 U	580 U	350 U	410 U
Indeno(1,2,3-cd)pyrene	360 U	350 U	350 U	350 U	350 U	340 U	340 U	350 U	370 U	400 UJ	360 U	390 U	580 U	350 U	110 J
Isophorone	360 U	350 U	350 U	350 U	350 U	340 U	340 U	350 U	370 U	400 U	360 U	390 U	580 U	350 U	410 U
Naphthalene	360 U	350 U	350 U	350 U	350 U	340 U	340 U	350 U	370 U	400 U	360 U	390 U	580 U	350 U	410 U
Nitrobenzene	360 U	350 U	350 U	350 U	350 U	340 U	340 U	350 U	370 U	400 U	360 U	390 U	580 U	350 U	410 U
Pentachlorophenol	900 U	890 UJ	870 UJ	870 UJ	890 UJ	860 U	860 UJ	870 UJ	930 UJ	1,000 UJ	910 UJ	990 UJ	1,400 UJ	890 UJ	1,000 U
Phenanthrene	360 U	350 U	350 U	350 U	350 U	340 U	340 U	350 U	370 U	400 U	360 U	390 U	580 U	350 U	1,200
Phenol	360 U	350 U	350 U	350 U	350 U	340 U	340 U	350 U	370 U	400 U	360 U	390 U	580 U	350 U	410 U
Pyrene	360 U	350 U	350 U	350 U	350 U	340 U	340 U	350 U	370 U	400 U	360 U	390 U	580 U	350 U	3,300
bis(2-Chloroethoxy)methane	360 U	350 U	350 U	350 U	350 U	340 U	340 U	350 U	370 U	400 U	360 U	390 U	580 U	350 U	410 U
bis(2-Chloroethyl)ether	360 U	350 U	350 U	350 U	350 U	340 U	340 U	350 U	370 U	400 U	360 U	390 U	580 U	350 U	410 U
bis(2-Ethylhexyl)phthalate	110 U	49 J	63 J	69 J	150 U	100 U	68 U	74 U	94 U	110 J	71 J	71 J	110 J	71 J	120 UJ
n-Nitroso-di-n-propylamine	360 U	350 U	350 U	350 U	350 U	340 U	340 U	350 U	370 U	400 U	360 U	390 U	580 U	350 U	410 U
n-Nitrosodiphenylamine	360 U	350 U	350 U	350 U	350 U	340 U	340 U	350 U	370 U	400 U	360 U	390 U	580 U	350 U	410 U

Site 95
Surface Soil Raw Analytical Data
October 2006

Station ID	IR95C-IS124	IR95C-IS125	IR95C-IS126		IR95C-IS127
Sample ID	IR95C-IS124-0-1-06D-2	IR95C-IS125-0-1-06D-2	IR95C-IS126-0-1-06D-2	IR95C-IS126D-0-1-06D-2	IR95C-IS127-0-1-06D-2
Sample Date	10/02/06	10/02/06	10/02/06	10/02/06	10/02/06
Chemical Name					
Semi-volatile Organic Compounds (UG/KG)					
1,1-Biphenyl	400 U	560 U	380 U	460 U	390 U
2,2'-Oxybis(1-chloropropane)	400 U	560 U	380 U	460 U	390 U
2,4,5-Trichlorophenol	1,000 U	1,400 U	950 U	1,200 U	970 U
2,4,6-Trichlorophenol	400 U	560 U	380 U	460 U	390 U
2,4-Dichlorophenol	400 U	560 U	380 U	460 U	390 U
2,4-Dimethylphenol	400 U	560 U	380 U	460 UJ	390 UJ
2,4-Dinitrophenol	1,000 R	1,400 UJ	950 UJ	1,200 R	970 R
2,4-Dinitrotoluene	400 U	560 U	380 U	460 U	390 U
2,6-Dinitrotoluene	400 U	560 U	380 U	460 U	390 U
2-Chloronaphthalene	400 U	560 U	380 U	460 U	390 U
2-Chlorophenol	400 U	560 U	380 U	460 U	390 U
2-Methylnaphthalene	400 U	560 U	380 U	460 U	390 U
2-Methylphenol	400 U	560 U	380 U	460 U	390 U
2-Nitroaniline	1,000 U	1,400 U	950 U	1,200 U	970 U
2-Nitrophenol	400 U	560 U	380 U	460 U	390 U
3,3'-Dichlorobenzidine	400 U	560 U	380 U	460 U	390 U
3-Nitroaniline	1,000 U	1,400 U	950 U	1,200 U	970 U
4,6-Dinitro-2-methylphenol	1,000 UJ	1,400 UJ	950 UJ	1,200 UJ	970 UJ
4-Bromophenyl-phenylether	400 U	560 U	380 U	460 U	390 U
4-Chloro-3-methylphenol	400 U	560 U	380 U	460 U	390 U
4-Chloroaniline	400 UJ	560 UJ	380 UJ	460 UJ	390 UJ
4-Chlorophenyl-phenylether	400 U	560 U	380 U	460 U	390 U
4-Methylphenol	400 U	560 U	380 U	460 U	390 U
4-Nitroaniline	1,000 U	1,400 U	950 U	1,200 U	970 U
4-Nitrophenol	1,000 U	1,400 U	950 U	1,200 UJ	970 UJ
Acenaphthene	400 U	560 U	380 U	460 U	390 U
Acenaphthylene	400 U	560 U	380 U	460 U	390 U
Acetophenone	400 U	560 U	380 U	460 U	390 U
Anthracene	400 U	560 U	380 U	460 U	390 U
Atrazine	400 U	560 U	380 U	460 U	390 U
Benzaldehyde	47 J	69 J	130 J	200 J	190 J
Benzo(a)anthracene	400 U	560 U	380 U	460 U	390 U
Benzo(a)pyrene	400 U	560 UJ	380 UJ	460 UJ	390 UJ
Benzo(b)fluoranthene	400 U	560 UJ	380 UJ	460 UJ	390 UJ
Benzo(g,h,i)perylene	400 U	560 UJ	380 UJ	460 UJ	390 UJ
Benzo(k)fluoranthene	400 U	560 UJ	380 UJ	460 UJ	390 UJ
Butylbenzylphthalate	400 U	560 U	380 U	460 U	390 U
Caprolactam	400 UJ	560 UJ	380 UJ	460 UJ	390 UJ
Carbazole	400 U	560 U	380 U	460 U	390 U
Chrysene	400 U	560 U	380 U	460 U	390 U
Di-n-butylphthalate	51 J	560 U	47 J	59 J	61 J
Di-n-octylphthalate	400 U	560 UJ	380 UJ	460 UJ	390 UJ
Dibenz(a,h)anthracene	400 U	560 UJ	380 UJ	460 UJ	390 UJ
Dibenzofuran	400 U	560 U	380 U	460 U	390 U
Diethylphthalate	400 U	560 U	380 U	460 U	390 U
Dimethyl phthalate	400 U	560 U	380 U	460 U	390 U
Fluoranthene	400 U	560 U	380 U	460 U	390 U
Fluorene	400 U	560 U	380 U	460 U	390 U
Hexachlorobenzene	400 U	560 U	380 U	460 U	390 U
Hexachlorobutadiene	400 U	560 U	380 U	460 U	390 U
Hexachlorocyclopentadiene	400 UJ	560 UJ	380 UJ	460 UJ	390 UJ
Hexachloroethane	400 U	560 U	380 U	460 U	390 U
Indeno(1,2,3-cd)pyrene	400 U	560 UJ	380 UJ	460 UJ	390 UJ
Isophorone	400 U	560 U	380 U	460 U	390 U
Naphthalene	400 U	560 UJ	380 UJ	460 U	390 U
Nitrobenzene	400 U	560 U	380 U	460 U	390 U
Pentachlorophenol	1,000 UJ	1,400 UJ	950 UJ	1,200 U	970 U
Phenanthrene	400 U	560 U	380 U	460 U	390 U
Phenol	400 U	560 U	380 U	460 U	390 U
Pyrene	400 U	560 U	380 U	460 U	390 U
bis(2-Chloroethoxy)methane	400 U	560 U	380 U	460 U	390 U
bis(2-Chloroethyl)ether	400 U	560 U	380 U	460 U	390 U
bis(2-Ethylhexyl)phthalate	120 U	140 UJ	160 UJ	130 UJ	220 UJ
n-Nitroso-di-n-propylamine	400 U	560 U	380 U	460 U	390 U
n-Nitrosodiphenylamine	400 U	560 U	380 U	460 U	390 U

Site 95
Surface Soil Raw Analytical Data
October 2006

Station ID	IR95C-IS100			IR95C-IS101			IR95C-IS102		IR95C-IS103	IR95C-IS104	IR95C-IS105	IR95C-IS106	IR95C-IS107	IR95C-IS108	IR95C-IS109
Sample ID	IR95C-IS100-0-1-06D-2	IR95C-IS100-0-1-06D-1	IR95C-IS100D-0-1-06D-1	IR95C-IS101-0-1-06D-2	IR95C-IS101D-0-1-06D-2	IR95C-IS101-0-1-06D-1	IR95C-IS102-0-1-06D-2	IR95C-IS102-0-1-06D-1	IR95C-IS103-0-1-06D-2	IR95C-IS104-0-1-06D-2	IR95C-IS105-0-1-06D-2	IR95C-IS106-0-1-06D-2	IR95C-IS107-0-1-06D-2	IR95C-IS108-0-1-06D-2	IR95C-IS109-0-1-06D-2
Sample Date	10/02/06	10/03/06	10/03/06	10/02/06	10/02/06	10/03/06	10/02/06	10/03/06	10/02/06	10/02/06	10/02/06	10/02/06	10/02/06	10/02/06	10/02/06
Chemical Name															
Pesticide/Polychlorinated Biphenyls (UG/KG)															
4,4'-DDD	3.6 U	NA	NA	4.3 U	4.1 U	NA	3.4 U	NA	3.4 U	3.8 U	3.5 U	3.5 U	3.5 U	3.7 U	3.5 U
4,4'-DDE	3 J	NA	NA	4.3 U	4.1 U	NA	3.4 U	NA	3.4 U	3.8 U	3.5 U	3.5 U	3.5 U	3.7 U	3.5 U
4,4'-DDT	3.4 J	NA	NA	4.3 U	4.1 U	NA	3.4 U	NA	3.4 U	3.8 U	3.5 U	3.5 U	3.5 U	3.2 J	3.5 U
Aldrin	1.9 U	NA	NA	2.2 U	2.1 U	NA	1.8 U	NA	1.8 U	2 U	1.8 U	1.8 U	1.8 U	1.9 U	1.8 U
Aroclor-1016	36 U	NA	NA	43 U	41 U	NA	34 U	NA	34 U	38 U	35 U	35 U	35 U	37 U	35 U
Aroclor-1221	73 U	NA	NA	86 U	83 U	NA	70 U	NA	69 U	77 U	72 U	71 U	71 U	75 U	72 U
Aroclor-1232	36 U	NA	NA	43 U	41 U	NA	34 U	NA	34 U	38 U	35 U	35 U	35 U	37 U	35 U
Aroclor-1242	36 U	NA	NA	43 U	41 U	NA	34 U	NA	34 U	38 U	35 U	35 U	35 U	37 U	35 U
Aroclor-1248	36 U	NA	NA	43 U	41 U	NA	34 U	NA	34 U	38 U	35 U	35 U	35 U	37 U	35 U
Aroclor-1254	36 U	NA	NA	43 U	41 U	NA	34 U	NA	34 U	38 U	35 U	35 U	35 U	37 U	35 U
Aroclor-1260	36 U	NA	NA	43 U	41 U	NA	34 U	NA	34 U	38 U	35 U	35 U	35 U	37 U	35 U
Dieldrin	3.6 U	NA	NA	4.3 U	4.1 U	NA	3.4 U	NA	3.4 U	3.8 U	3.5 U	3.5 U	3.5 U	3.7 U	3.5 U
Endosulfan I	1.9 U	NA	NA	2.2 U	2.1 U	NA	1.8 U	NA	1.8 U	2 U	1.8 U	1.8 U	1.8 U	1.9 U	1.8 U
Endosulfan II	3.6 U	NA	NA	4.3 U	4.1 U	NA	3.4 U	NA	3.4 U	3.8 U	3.5 U	3.5 U	3.5 U	3.7 U	3.5 U
Endosulfan sulfate	3.6 U	NA	NA	4.3 U	4.1 U	NA	3.4 U	NA	3.4 U	3.8 U	3.5 U	3.5 U	3.5 U	25 J	3.5 U
Endrin	3.6 U	NA	NA	4.3 U	4.1 U	NA	3.4 U	NA	3.4 U	3.8 U	3.5 U	3.5 U	3.5 U	3.7 U	3.5 U
Endrin aldehyde	3.6 U	NA	NA	3.7 J	4.1 U	NA	3.4 U	NA	3.4 U	3.8 U	3.5 U	3.5 U	3.5 U	3.7 U	3.5 U
Endrin ketone	3.6 U	NA	NA	4.3 U	4.1 U	NA	3.4 U	NA	3.4 U	3.8 U	3.5 U	3.5 U	3.5 U	7 J	3.5 U
Heptachlor	1.9 U	NA	NA	2.2 U	2.1 U	NA	1.8 U	NA	1.8 U	2 U	1.8 U	1.8 U	1.8 U	1.9 U	1.8 U
Heptachlor epoxide	1.9 U	NA	NA	2.2 U	2.1 U	NA	1.8 U	NA	1.8 U	2 U	1.8 U	1.8 U	1.8 U	1.5 J	1.8 U
Methoxychlor	19 U	NA	NA	22 U	21 U	NA	18 U	NA	18 U	20 U	18 U	18 U	18 U	19 U	18 U
Toxaphene	190 U	NA	NA	220 U	210 U	NA	180 U	NA	180 U	200 U	180 U	180 U	180 U	190 U	180 U
alpha-BHC	1.9 U	NA	NA	2.2 U	2.1 U	NA	1.8 U	NA	1.8 U	2 U	1.8 U	1.8 U	1.8 U	1.9 U	1.8 U
alpha-Chlordane	1.9 U	NA	NA	2.2 U	2.1 U	NA	1.8 U	NA	1.8 U	2 U	1.8 U	1.8 U	1.8 U	1.9 U	1.8 U
beta-BHC	1.9 U	NA	NA	2.2 U	2.1 U	NA	1.8 U	NA	1.8 U	2 U	1.8 U	1.8 U	1.8 U	1.9 U	1.8 U
delta-BHC	1.9 U	NA	NA	2.2 U	2.1 U	NA	1.8 U	NA	1.8 U	2 U	1.8 U	1.8 U	1.8 U	1.9 U	1.8 U
gamma-BHC (Lindane)	1.9 U	NA	NA	2.2 U	2.1 U	NA	1.8 U	NA	1.8 U	2 U	1.8 U	1.8 U	1.8 U	1.9 U	1.8 U
gamma-Chlordane	1.9 U	NA	NA	2.2 U	2.1 U	NA	1.8 U	NA	1.8 U	2 U	1.8 U	1.8 U	1.8 U	1.9 U	1.8 U
Total Metals (MG/KG)															
Aluminum	1,020	NA	NA	1,220	1,180	NA	1,980	NA	3,280	5,280	1,060	509	270	604	438
Antimony	0.36 UJ	NA	NA	0.49 UJ	0.37 UJ	NA	0.13 UJ	NA	0.069 UJ	4.9 UJ	0.056 UJ	4.4 UJ	4.6 UJ	0.17 UJ	4.4 UJ
Arsenic	6.1	NA	NA	2.4	1.8	NA	15.4	NA	1 U	1.6	0.61 U	0.2 U	0.11 U	0.19 U	0.2 U
Barium	11.6 J	NA	NA	17.1 J	14.8 J	NA	16.4 J	NA	6.6 J	12 J	7.7 J	4.4 J	3 J	8 J	4.4 J
Beryllium	0.031 J	NA	NA	0.038 J	0.037 J	NA	0.054 J	NA	0.073 J	0.063 J	0.023 J	0.014 J	0.022 J	0.022 J	0.018 J
Cadmium	0.012 U	NA	NA	0.013 U	0.01 U	NA	0.37 U	NA	0.37 U	0.41 U	0.01 U	0.0045 U	0.0077 U	0.019 U	0.37 U
Calcium	1,080	NA	NA	2,290	1,680	NA	10,600 J	NA	19,500	3,350	243 J	312 J	222 J	728 J	107 J
Chromium	1.5	NA	NA	1.7	1.8	NA	2.1 J	NA	5.6	6.1	1.2	1	0.71 UJ	1 UJ	0.9 UJ
Cobalt	0.14 U	NA	NA	0.18 U	0.17 U	NA	0.22 J	NA	0.43 J	0.33 J	0.091 U	0.082 U	0.071 U	0.1 U	0.087 U
Copper	3.5 U	NA	NA	4.6 U	3.8 U	NA	2.9 U	NA	3.8 U	5.2 U	3.4 U	2.9 U	2.9 U	3.4 U	2.3 U
Iron	626	NA	NA	795	743	NA	1,000 J	NA	2,590	4,680	515	321	233 J	343 J	294 J
Lead	11.9	NA	NA	13.6	12.6	NA	2.5	NA	3.1	9.6	6.1	6.6	3.7	5.7	1.4
Magnesium	122 J	NA	NA	232 J	179 J	NA	449 J	NA	464	280 J	48 J	48.9 J	30.9 J	65.5 J	19.4 J
Manganese	7.3	NA	NA	5.9	6.4	NA	18.9 J	NA	41.1	46.6	5.1	4.4	6.5 J	6.8 J	7.1 J
Mercury	0.069 J-	NA	NA	0.074 J-	0.057 J-	NA	0.095 UJ	NA	0.083 UJ	0.01 J-	0.089 UJ	0.093 UJ	0.085 UJ	0.09 UJ	0.089 UJ
Nickel	0.64 U	NA	NA	1.1 J	0.92 J	NA	0.82 J	NA	1.3 J	1.6 J	0.5 U	0.33 U	0.22 UJ	0.4 UJ	0.16 UJ
Potassium	114 J	NA	NA	98.3 J	88.8 J	NA	101 J	NA	315 J	261 J	64.7 J	55.7 U	45.2 UJ	137 J	35.6 UJ
Selenium	0.29 U	NA	NA	0.65 U	0.51 U	NA	0.47 U	NA	0.065 U	0.24 U	0.39 U	0.19 U	0.17 U	0.47 U	0.31 U
Silver	0.015 U	NA	NA	0.041 U	0.028 U	NA	0.051 U	NA	0.028 U	0.017 U	0.76 U	0.03 U	0.77 U	0.032 U	0.02 U
Sodium	34.7 U	NA	NA	71.4 U	41.5 U	NA	37.4 UJ	NA	59.8 U	30.1 U	20 U	18.4 U	28 UJ	34.3 UJ	22.9 UJ
Thallium	0.12 U	NA	NA	0.13 U	2.2 U	NA	1.8 U	NA	1.8 U	0.17 U	0.069 U	1.8 U	0.18 U	0.15 U	1.9 U
Vanadium	2.1 J	NA	NA	3.2 J	2.9 J	NA	2.8 J	NA	9.9	10	1.9 J	1.7 J	0.98 J	1.5 J	1.4 J
Zinc	5.1 U	NA	NA	8.9 U	7.3 U	NA	2.9 UJ	NA	6.8 U	14.2	2.5 U	3.7 U	3.3 UJ	4.6 UJ	2.3 UJ

Notes:
U- Analyte not detected
J- Reported value is estimated
J- - Reported value is biased low
UJ- Analyte not detected. Quantiation limit is imprecise
NA- Not analyzed
Shading represents detection

Site 95
Surface Soil Raw Analytical Data
October 2006

Station ID	IR95C-IS110	IR95C-IS111	IR95C-IS112		IR95C-IS113	IR95C-IS114	IR95C-IS115	IR95C-IS116	IR95C-IS117	IR95C-IS118	IR95C-IS119	IR95C-IS120	IR95C-IS121	IR95C-IS122	IR95C-IS123
Sample ID	IR95C-IS110-0-1-06D-2	IR95C-IS111-0-1-06D-2	IR95C-IS112-0-1-06D-2	IR95C-IS112D-0-1-06D-2	IR95C-IS113-0-1-06D-2	IR95C-IS114-0-1-06D-2	IR95C-IS115-0-1-06D-2	IR95C-IS116-0-1-06D-2	IR95C-IS117-0-1-06D-2	IR95C-IS118-0-1-06D-2	IR95C-IS119-0-1-06D-2	IR95C-IS120-0-1-06D-2	IR95C-IS121-0-1-06D-2	IR95C-IS122-0-1-06D-2	IR95C-IS123-0-1-06D-2
Sample Date	10/02/06	10/02/06	10/02/06	10/02/06	10/02/06	10/02/06	10/02/06	10/02/06	10/02/06	10/02/06	10/02/06	10/02/06	10/02/06	10/02/06	10/02/06
Chemical Name															
Pesticide/Polychlorinated Biphenyls (UG/KG)															
4,4'-DDD	3.6 U	3.5 U	3.4 U	3.5 U	3.5 U	3.4 U	3.4 U	3.5 U	3.7 U	3.9 U	3.6 U	3.9 U	5.8 U	3.5 U	4 U
4,4'-DDE	3.6 U	3.5 U	3.4 U	3.5 U	3.5 U	3.4 U	3.4 U	3.5 U	2.1 J	3.9 U	2.1 J	2.1 J	5.8 U	3.5 U	4 U
4,4'-DDT	3.6 U	3.5 U	3.4 U	3.5 U	3.5 U	3.4 U	3.4 U	3.5 U	3.7 U	3.9 U	3.6 U	4.6 J	5.8 U	3.5 U	4 U
Aldrin	1.8 U	1.8 U	1.8 U	1.8 U	1.8 U	1.8 U	1.8 U	1.8 U	1.9 U	2 U	1.9 U	2 U	2.7 J	1.8 U	2.1 U
Aroclor-1016	36 U	35 U	34 U	35 U	35 U	34 U	34 U	35 U	37 U	39 U	36 U	39 U	58 U	35 U	40 U
Aroclor-1221	72 U	72 U	70 U	70 U	72 U	69 U	69 U	70 U	75 U	80 U	74 U	79 U	120 U	72 U	82 U
Aroclor-1232	36 U	35 U	34 U	35 U	35 U	34 U	34 U	35 U	37 U	39 U	36 U	39 U	58 U	35 U	40 U
Aroclor-1242	36 U	35 U	34 U	35 U	35 U	34 U	34 U	35 U	37 U	39 U	36 U	39 U	58 U	35 U	40 U
Aroclor-1248	36 U	35 U	34 U	35 U	35 U	34 U	34 U	35 U	37 U	39 U	36 U	39 U	58 U	35 U	40 U
Aroclor-1254	36 U	35 U	34 U	35 U	35 U	34 U	34 U	35 U	37 U	39 U	36 U	39 U	58 U	35 U	40 U
Aroclor-1260	36 U	35 U	34 U	35 U	35 U	34 U	34 U	35 U	37 U	39 U	36 U	39 U	58 U	35 U	40 U
Dieldrin	3.6 U	3.5 U	3.4 U	3.5 U	3.5 U	3.4 U	3.4 U	3.5 U	3.7 U	3.9 U	3.6 U	3.9 U	5.8 U	3.5 U	4 U
Endosulfan I	1.8 U	1.8 U	1.8 U	1.8 U	1.8 U	1.8 U	1.8 U	1.8 U	1.9 U	2 U	1.9 U	2 U	3 U	1.8 U	2.1 U
Endosulfan II	3.6 U	3.5 U	3.4 U	3.5 U	3.5 U	3.4 U	3.4 U	3.5 U	3.7 U	3.9 U	3.6 U	3.9 U	5.8 U	3.5 U	4 U
Endosulfan sulfate	3.6 U	4.2 J	3.4 U	3.5 U	3.5 U	3.4 U	3.4 U	3.5 U	3.7 U	6 J	7.6	33 J	5.8 U	3.5 U	2.7 J
Endrin	3.6 U	3.5 U	3.4 U	3.5 U	3.5 U	3.4 U	3.4 U	3.5 U	3.7 U	3.9 U	3.6 U	3.9 U	5.8 U	3.5 U	4 U
Endrin aldehyde	3.6 U	3.5 U	3.4 U	3.5 U	3.5 U	3.4 U	3.4 U	3.5 U	3.7 U	3.9 U	3.6 U	3.9 U	5.8 U	3.5 U	2.8 J
Endrin ketone	3.6 U	3.2 J	3.4 U	3.5 U	3.5 U	3.4 U	3.4 U	3.5 U	2.3 J	3.9 U	5.9	13 J	8.4 J	3.5 U	4 U
Heptachlor	1.8 U	1.8 U	1.8 U	1.8 U	1.8 U	1.8 U	1.8 U	1.8 U	1.9 U	2 U	1.9 U	2 U	3 U	1.8 U	2.1 U
Heptachlor epoxide	1.8 U	1.8 U	1.8 U	1.8 U	1.8 U	1.8 U	1.8 U	1.8 U	1.9 U	2 U	1.9 U	2 U	3 U	1.8 U	2.1 U
Methoxychlor	18 U	18 U	18 U	18 U	18 U	18 U	18 U	18 U	19 U	20 U	19 U	20 U	30 U	18 U	21 U
Toxaphene	180 U	180 U	180 U	180 U	180 U	180 U	180 U	180 U	190 U	200 U	190 U	200 U	300 U	180 U	210 U
alpha-BHC	1.8 U	1.8 U	1.8 U	1.8 U	1.8 U	1.8 U	1.8 U	1.8 U	1.9 U	2 U	1.9 U	2 U	3 U	1.8 U	2.1 U
alpha-Chlordane	1.8 U	1.8 U	1.8 U	1.8 U	1.8 U	1.8 U	1.8 U	1.8 U	1.9 U	2 U	1.9 U	1.4 J	460	1.8 U	2.1 U
beta-BHC	1.8 U	1.8 U	1.8 U	1.8 U	1.8 U	1.8 U	1.8 U	1.8 U	1.9 U	2 U	1.9 U	2 U	3 U	1.8 U	2.1 U
delta-BHC	1.8 U	1.8 U	1.8 U	1.8 U	1.8 U	1.8 U	1.8 U	1.8 U	1.9 U	2 U	1.9 U	2 U	3 U	1.8 U	2.1 U
gamma-BHC (Lindane)	1.8 U	1.8 U	1.8 U	1.8 U	1.8 U	1.8 U	1.8 U	1.8 U	1.9 U	2 U	1.9 U	2 U	3 U	1.8 U	2.1 U
gamma-Chlordane	1.8 U	1.8 U	1.8 U	1.8 U	1.8 U	1.8 U	1.8 U	1.8 U	0.94 J	2 U	1.9 U	2 U	390 J	1.8 U	2.1 U
Total Metals (MG/KG)															
Aluminum	3,010	560	356	406	1,730	912	563	3,860	823	1,720	1,160	1,380	12,400	3,700	1,480
Antimony	4.5 UJ	0.15 UJ	0.064 UJ	0.055 UJ	4.5 UJ	4.3 UJ	4.4 UJ	4.5 UJ	4.6 UJ	0.2 UJ	0.54 UJ	0.21 UJ	7.4 UJ	4.6 UJ	0.17 UJ
Arsenic	0.6 U	0.21 U	0.22 U	0.17 U	0.49 U	0.15 U	0.092 U	0.59 U	0.26 U	0.45 U	1.1 U	0.59 U	2 U	2.1	0.5 U
Barium	6.6 J	8.3 J	1.6 J	1.9 J	3 J	5.7 J	2.4 U	7.5 J	40.8	30.4 J	25 J	19.2 J	40.9 J	13.8 J	34.9
Beryllium	0.041 J	0.023 J	0.023 J	0.025 J	0.021 J	0.028 J	0.017 J	0.036 J	0.026 J	0.037 J	0.036 J	0.039 J	0.12 J	0.16 J	0.032 J
Cadmium	0.37 U	0.0086 U	0.37 U	0.36 U	0.38 U	0.005 U	0.0076 U	0.38 U	0.075 U	0.042 U	0.014 U	0.42 U	0.039 U	0.11 U	0.019 U
Calcium	2,350	129 J	45.5 J	52.5 J	5,640	79 J	90.6 J	804	2,870	2,040 J	1,690 J	982 J	2,800 J	60,800 J	1,300
Chromium	4.1	0.89 UJ	0.86 UJ	0.96 UJ	2.6	1.1	1.1	4.4	1.2	2.1 J	1.6 J	1.9 J	11.7 J	6.6 J	1.9
Cobalt	0.33 J	0.077 U	0.064 U	0.077 U	0.12 U	0.091 U	0.089 U	0.28 J	0.19 U	0.21 J	0.2 J	0.18 J	0.78 J	1 J	0.22 J
Copper	10	2.6 U	2.3 U	2.3 U	3.5 U	2.7 U	3.3 U	4.2 U	5.5 U	4.8 U	3.7 U	4.7 U	7.8 U	5.1 U	5 U
Iron	2,750	376 J	289 J	323 J	1,730	437	415	2,560	653	1,140 J	777 J	1,190 J	6,750 J	3,970 J	1,130
Lead	6.1	7	2.5	3	3.7	5.9	6.8	7.9	13.7	8.8	10.3	19	19.6	4.8	15.2
Magnesium	164 J	33.7 J	15.3 J	18.8 J	146 J	33.5 J	26.8 J	150 J	133 J	247 J	159 J	149 J	576 J	1,340 J	168 J
Manganese	25.5	5.6 J	6.5 J	7.9 J	7.1	5.8	5.3	26.8	119	37.5 J	23.2 J	7.7 J	32.9 J	150 J	11.6
Mercury	0.01 J-	0.011 J-	0.087 UJ	0.096 UJ	0.089 UJ	0.091 UJ	0.094 UJ	0.092 UJ	0.04 J-	0.081 J-	0.089 J-	0.034 J-	0.034 J-	0.094 UJ	0.054 J-
Nickel	0.98 J	0.3 UJ	0.21 UJ	0.22 UJ	0.55 U	0.33 U	0.34 U	1.1 J	0.95 J	1.1 J	0.87 J	0.8 UJ	3.1 J	2.8 J	1.1 J
Potassium	167 J	52 UJ	32.1 UJ	46 UJ	75 J	42.8 U	37.2 U	147 J	125 J	216 J	109 J	166 J	523 J	822 J	137 J
Selenium	0.75 U	0.33 U	0.3 U	0.28 U	0.39 U	0.26 U	0.3 U	0.49 U	0.64 U	0.59 U	0.54 U	0.52 U	0.86 U	0.28 U	0.43 U
Silver	0.018 U	0.028 U	0.014 U	0.028 U	0.032 U	0.71 U	0.022 U	0.036 U	0.77 U	0.84 U	0.76 U	0.022 U	0.076 U	0.049 U	0.88 U
Sodium	26 U	26.3 UJ	23.8 UJ	24.6 UJ	24.1 U	17.5 U	17.1 U	63 U	38.2 U	59.8 UJ	52.7 UJ	42.5 UJ	71.1 UJ	161 J	38.6 U
Thallium	0.44 U	0.12 U	0.41 U	0.15 U	0.15 U	0.17 U	0.084 U	0.17 U	0.11 U	0.1 U	0.19 U	0.16 U	0.76 U	0.31 U	2.2 U
Vanadium	6.4	1.4 J	1.6 J	1.7 J	3.7 J	1.7 J	1.8 J	6.9	2.4 J	3.9 J	2.7 J	3.4 J	19.2	14.1	3.4 J
Zinc	26.5	3 UJ	2.7 UJ	2.9 UJ	4 U	2.9 U	3.1 U	15.7	9.2 U	14.5 J	6.6 UJ	7.2 UJ	29.1 J	44.8 J	12.7

Notes:
U- Analyte not detected
J- Reported value is estimated
J- - Reported value is biased low
UJ- Analyte not detected. Quantiation limit is imprecise
NA- Not analyzed
Shading represents detection

Site 95
Surface Soil Raw Analytical Data
October 2006

Station ID	IR95C-IS124	IR95C-IS125	IR95C-IS126		IR95C-IS127
Sample ID	IR95C-IS124-0-1-06D-2	IR95C-IS125-0-1-06D-2	IR95C-IS126-0-1-06D-2	IR95C-IS126D-0-1-06D-2	IR95C-IS127-0-1-06D-2
Sample Date	10/02/06	10/02/06	10/02/06	10/02/06	10/02/06
Chemical Name					
Pesticide/Polychlorinated Biphenyls (UG/KG)					
4,4'-DDD	2.5 J	5.6 UJ	3.8 U	4.6 U	3.8 U
4,4'-DDE	4 U	5.6 UJ	3.8 U	2.8 J	3.8 U
4,4'-DDT	4 U	5.6 UJ	3.8 U	4.6 J	4.8 J
Aldrin	2.1 U	2.9 UJ	2 U	2.4 U	2 U
Aroclor-1016	40 U	56 UJ	38 U	46 U	38 U
Aroclor-1221	82 U	110 UJ	77 U	94 U	78 U
Aroclor-1232	40 U	56 UJ	38 U	46 U	38 U
Aroclor-1242	40 U	56 UJ	38 U	46 U	38 U
Aroclor-1248	40 U	56 UJ	38 U	46 U	38 U
Aroclor-1254	40 U	56 UJ	38 U	46 U	38 U
Aroclor-1260	40 U	56 UJ	38 U	46 U	38 U
Dieldrin	4 U	5.6 UJ	3.8 U	4.6 U	3.8 U
Endosulfan I	2.1 U	2.9 UJ	2 U	2.4 U	2 U
Endosulfan II	4 U	5.6 UJ	3.8 U	4.6 U	3.8 U
Endosulfan sulfate	4 U	5.6 UJ	1.9 J	4.6 U	3.8 U
Endrin	4 U	5.6 UJ	3.8 U	4.6 U	3.8 U
Endrin aldehyde	4 U	5.6 UJ	3.8 U	4.6 U	4.8 J
Endrin ketone	6.2 J	7.5 J	2.6 J	4.8 J	3.8 U
Heptachlor	2.1 U	2.9 UJ	2 U	2.4 U	2 U
Heptachlor epoxide	2.1 U	2.9 UJ	2 U	2.4 U	2 U
Methoxychlor	21 U	29 UJ	20 U	24 U	20 U
Toxaphene	210 U	290 UJ	200 U	240 U	200 U
alpha-BHC	2.1 U	2.9 UJ	2 U	2.4 U	2 U
alpha-Chlordane	2.1 U	2.9 UJ	2 U	2.4 U	2 U
beta-BHC	2.1 U	2.9 UJ	2 U	2.4 U	2 U
delta-BHC	2.1 U	2.9 UJ	2 U	2.4 U	2 U
gamma-BHC (Lindane)	2.1 U	2.9 UJ	2 U	2.4 U	2 U
gamma-Chlordane	2.1 U	2.9 UJ	2 U	2.4 U	2 U
Total Metals (MG/KG)					
Aluminum	1,210	1,390	1,050	1,420	1,770
Antimony	5.3 UJ	7 UJ	0.18 UJ	0.44 UJ	0.046 UJ
Arsenic	0.33 U	0.35 U	0.25 U	0.41 U	0.44 U
Barium	20.8	16.3 J	12.4 J	16.5 J	18.4
Beryllium	0.03 J	0.03 J	0.024 J	0.029 J	0.037 J
Cadmium	0.061 U	0.065 U	0.4 U	0.02 U	0.044 U
Calcium	2,740	1,220	969	1,370	1,750
Chromium	1.7	2.5	2.1	2.2	2.4
Cobalt	0.18 U	0.21 U	0.16 U	0.22 U	0.26 J
Copper	5.7 U	6.1 U	4.1 U	5.5 U	5 U
Iron	972	895	747	937	1,290
Lead	8.8	10.1	8.9	10.7	13.9
Magnesium	219 J	251 J	188 J	240 J	207 J
Manganese	35.5	25.9	9.6	11.1	20.3
Mercury	0.047 J-	0.066 J-	0.13 J-	0.16 J-	0.076 J-
Nickel	1.1 J	1.2 J	0.89 J	1.3 J	1.2 J
Potassium	167 J	181 J	165 J	161 J	137 J
Selenium	0.86 U	0.42 U	0.49 U	0.7 U	0.67 U
Silver	0.88 U	0.032 U	0.053 U	0.08 U	0.028 U
Sodium	79.4 J	46.6 U	39.8 U	58 U	52.9 U
Thallium	2.2 U	0.14 U	2 U	2.5 U	0.16 U
Vanadium	3.2 J	3.3 J	2.6 J	3.3 J	4.3
Zinc	15	16.2	11.4	16.4	11.6

Notes:
U- Analyte not detected
J- Reported value is estimated
J- - Reported value is biased low
UJ- Analyte not detected. Quantiation limit is imprecise
NA- Not analyzed
Shading represents detection

Appendix C

Background Background Concentrations

APPENIDIX C
Base Background Concentrations
MCB Camp Lejeune, North Carolina

METALS	Shallow Groundwater µg/L	Deep Groundwater µg/L	Surface Soil mg/kg	Subsurface Soil mg/kg
Aluminum	346.0	438.4	8,965	13,061
Antimony	4.18	4.1	0.564	0.392
Arsenic	6.54	5.8	0.879	5.29
Barium	37.31	35.3	19.4	37.34
Beryllium	3.56	5.9	0.252	0.432
Cadmium	2.48	3.2	0.053	ND
Calcium	11858.9	17688.5	33,240	944
Chromium	7.28	13.7	8.93	30.9
Cobalt	6.90	7.9	0.412	2.33
Copper	5.46	9.4	11.2	7.03
Iron	954.5	2115.4	6,097	16,984
Lead	5.15	8.8	25.8	12.6
Magnesium	2420.6	2648.2	804	1,022
Manganese	72.9	63.9	43.8	23.6
Mercury	2.05	2.0	0.120	0.096
Nickel	8.76	10.2	1.65	4.73
Potassium	1384.1	1576.5	384	1,043
Selenium	4.42	4.5	1.25	0.682
Silver	3.34	3.1	0.372	0.180
Sodium	9512.7	11052.3	ND	ND
Thallium	5.00	4.8	ND	ND
Vanadium	9.11	14.4	28.5	44.7
Zinc	16.9	18.3	31.2	21.5

Base background concentrations are based on the statistical analysis of base-wide investigations as described in the Base Background Study (Baker, 2001) and Base Background Groundwater Study (Baker, 2002)

Appendix D

Boring Logs and Well Construction Diagrams

D-1 Jaybird Road
D-2 Magnolia Road
D-3 Lyman Road

PROJECT NUMBER	WELL NUMBER SHEET 1 OF 1

CH2MHILL

WELL COMPLETION DIAGRAM

PROJECT : LOCATION :

DRILLING CONTRACTOR :

DRILLING METHOD AND EQUIPMENT USED :

WATER LEVELS : START : END : LOGGER :

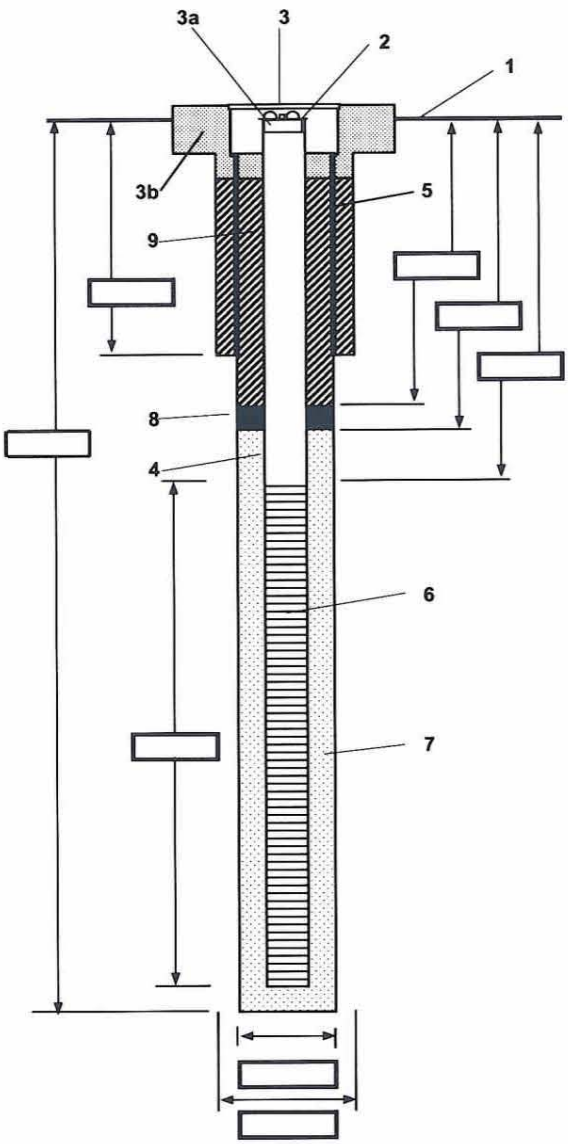

1- Ground elevation at well _____

2- Top of casing elevation _____

3- Wellhead protection cover type _____
a) locking expansion plug _____
b) concrete pad dimensions _____

4- Dia./type of well casing _____

5- Dia./type of surface casing _____

6- Type/slot size of screen _____

7- Type screen filter _____
a) Quantity used _____

8- Type of seal _____
a) Quantity used _____

9- Grout
a) Grout mix used _____
b) Method of placement _____
c) Vol. of surface casing grout _____
d) Vol. of well casing grout _____

Development method _____

Development time _____

Estimated purge volume _____

Comments _____

PROJECT NUMBER	WELL NUMBER	
328423.FI.MW.95	IR95-MW04	SHEET 1 OF 1

CH2MHILL

WELL COMPLETION DIAGRAM

PROJECT : Site 95-Jaybird Road LOCATION : MCB Camp Lejeune Jacksonville, North Carolina

DRILLING CONTRACTOR : Probe Tech.

DRILLING METHOD AND EQUIPMENT USED : 4 1/4" HAS

WATER LEVELS : START : 2/22/06 @ 11:55 END : 13:15 LOGGER : J Vaughn/CLT

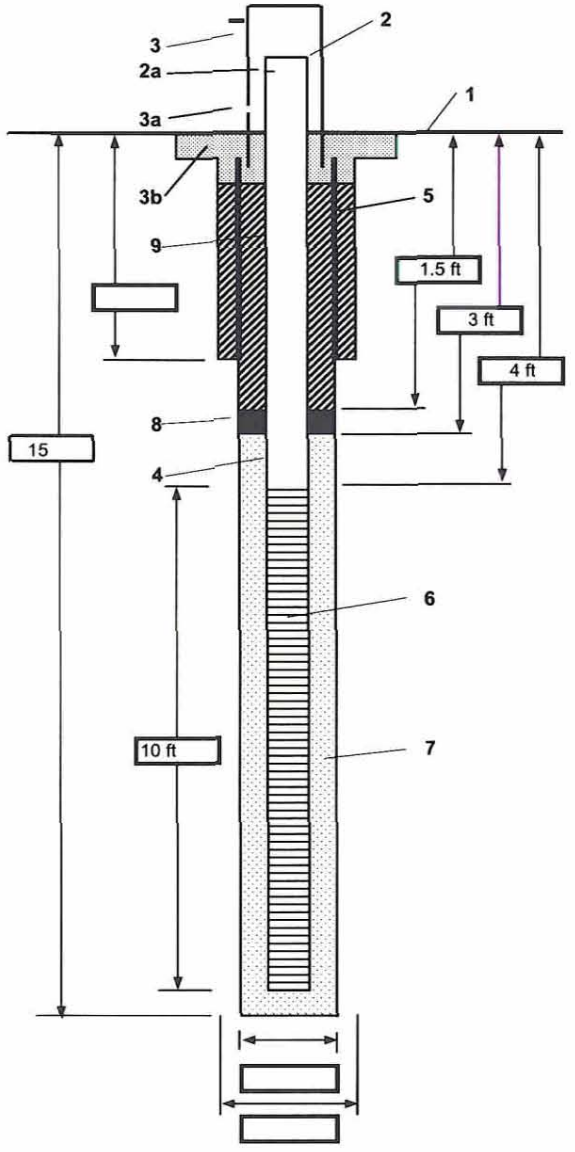

1- Ground elevation at well _____

2- Top of casing elevation _____
a) vent hole? _____

3- Wellhead protection cover type _____
a) weep hole? _____
b) concrete pad dimensions _____

4- Dia./type of well casing _____

5- Dia./type of surface casing _____

6- Type/slot size of screen 0.010" slot PVC Sch. 40

7- Type screen filter 20/30 Sand
a) Quantity used _____

8- Type of seal 3/8" bentonite hole plug
a) Quantity used _____

9- Grout
a) Grout mix used 95% Port Type I and 5% bentonite
b) Method of placement _____
c) Vol. of surface casing grout _____
d) Vol. of well casing grout _____

Development method _____

Development time _____

Estimated purge volume _____

Comments _____

CH2MHILL

Well Number: 95A-MW04

Client: NAVFAC
Project: Camp Lejeune
Location: Jacksonville, NC
Project Number: 328432

Driller: Probe Tech
Drilling Method: 4 1/4" HSA
Sampling Method: DPT Geoprobe
Logged by: J. Vaughan/CLT
Start/Finish Date: 2-22-06 11:10 / 2-22-06 13:00

Depth (ft)	Sample Info: Sample #	Sample Info: STP (6"-6"-6")	Soil Log	Soil Description	Depth / Elev	Well Drawing	Well Construction Notes
				Ground Surface	10		
0				**Silty Sand (SM)** Organic silty vf sand, dk brown, loose, moist	0		Type of Well Casing- 2 inch ID/Schedule 40 PVC
				Silty Sand (SM) Silty vf sand, tan, loose, moist			Type of Grout- 95% Portland Type I and 5% Bentonite
							Type of Seal- 3/8" Bentonite Holeplug
					6		
				Silty Sand (SM) Silty f sand, dk gray, loose, moist	4 / 5		
5				**Silty Sand (SM)** Silty vf sand, tan loose, wet	5 / 4		
				Clayey Silty Sand (SC/SM) Clayey silty vf to f sand, gray, med dense, wet	6		Type of Screen- 0.010" Slot Schedule 40 PVC
					2		
				Silty Sand (SM) Silty f sand, gray loose, wet	8		
				Clayey Sand (SC) Clayey fine-med sand, gray, med dense, wet, wood fragments			
10					-2		
				Sand (SP) Fine-med sand, trace silty and clay, tan, loose, wet	12		Type of Filter Pack- 20/30 Sand
					-5		
15				End of Log	15		
20							

PROJECT NUMBER	WELL NUMBER SHEET 1 OF 1

CH2MHILL

WELL COMPLETION DIAGRAM

PROJECT : LOCATION :

DRILLING CONTRACTOR :

DRILLING METHOD AND EQUIPMENT USED :

WATER LEVELS : START : END : LOGGER :

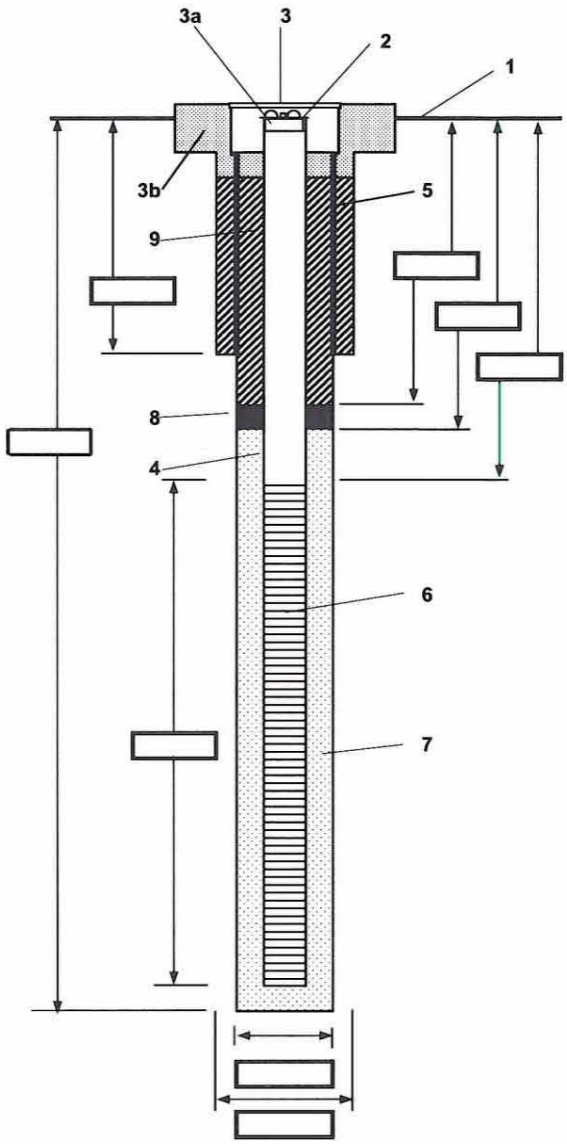

1- Ground elevation at well _____

2- Top of casing elevation _____

3- Wellhead protection cover type _____
a) locking expansion plug _____
b) concrete pad dimensions _____

4- Dia./type of well casing _____

5- Dia./type of surface casing _____

6- Type/slot size of screen _____

7- Type screen filter _____
a) Quantity used _____

8- Type of seal _____
a) Quantity used _____

9- Grout
a) Grout mix used _____
b) Method of placement _____
c) Vol. of surface casing grout _____
d) Vol. of well casing grout _____

Development method _____

Development time _____

Estimated purge volume _____

Comments _____

PROJECT NUMBER	WELL NUMBER		
328423.FI.MW.95	IR95-MW05	SHEET 1	OF 1

CH2MHILL

WELL COMPLETION DIAGRAM

PROJECT : Site 95-Jaybird Road LOCATION : MCB Camp Lejeune Jacksonville, North Carolina

DRILLING CONTRACTOR : Probe Tech.

DRILLING METHOD AND EQUIPMENT USED : 4 1/4" HAS

WATER LEVELS : START : 2/22/06 @ 14:15 END : 15:10 LOGGER : J Vaughn/CLT

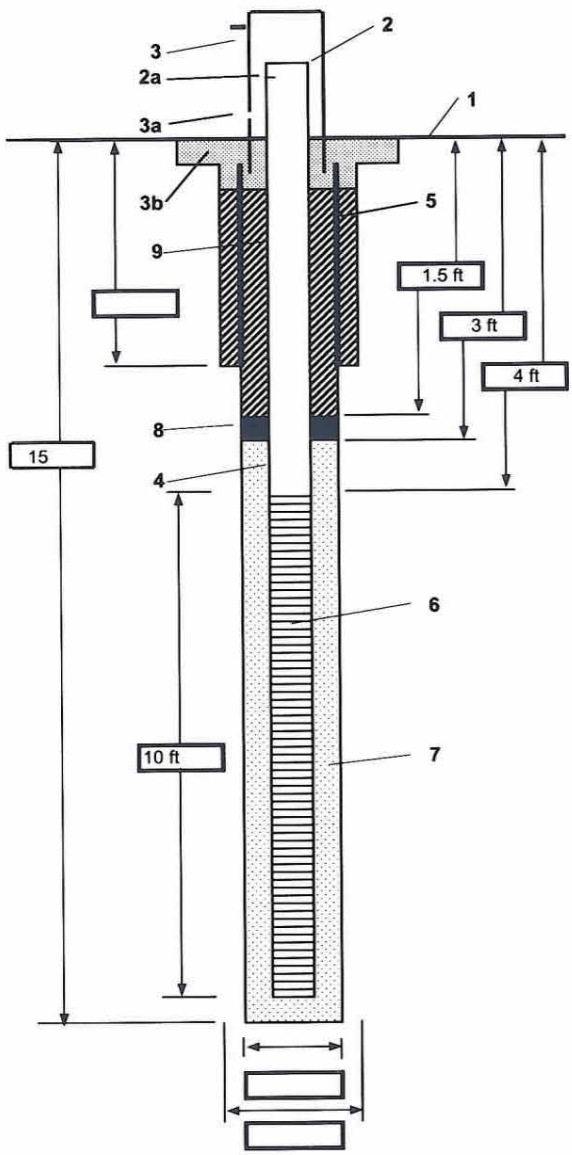

1- Ground elevation at well _____

2- Top of casing elevation _____
a) vent hole? _____

3- Wellhead protection cover type _____
a) weep hole? _____
b) concrete pad dimensions _____

4- Dia./type of well casing _____

5- Dia./type of surface casing _____

6- Type/slot size of screen 0.010" slot PVC Sch. 40

7- Type screen filter 20/30 Sand
a) Quantity used _____

8- Type of seal 3/8" bentonite hole plug
a) Quantity used _____

9- Grout
a) Grout mix used 95% Port Type I and 5% bentonite
b) Method of placement _____
c) Vol. of surface casing grout _____
d) Vol. of well casing grout _____

Development method _____

Development time _____

Estimated purge volume _____

Comments _____

CH2MHILL

Well Number: 95A-MW05

Client: NAVFAC
Project: Camp Lejeune
Location: Jacksonville, NC
Project Number: 328532

Driller: Probe Tech
Drilling Method: 4 1/4" HSA
Sampling Method: DPT Geoprobe
Logged by: J. Vaughan/CLT
Start/Finish Date: 2-22-06 13:25 / 2-22-06 15:00

Depth (ft)	Sample Info: Sample #	Sample Info: STP (6"-6"-6")	Soil Log	Soil Description	Depth / Elev	Well Drawing	Well Construction Notes
				Ground Surface	10		
0				**Silty Sand (SM)** Organic rich silty vf sand, dk brown, loose, moist	0		Type of Well Casing- 2 inch ID/Schedule 40 PVC Type of Grout- 95% Portland Type I and 5% Bentonite Type of Seal- 3/8" Bentonite Holeplug
				Silty Sand (SM) Silty vf sand, tan to gray, loose, moist, trace shell fragments, wood roots, at 5 ft gray and wet			
5							Type of Screen- 0.010" Slot Schedule 40 PVC
					1		
				Clayey Sand (SC) Clayey vf to f sand, lt gray, med dense, wet	9		
10					-1		
				Silty Sand (SM) Silty f to med sand, lt gray, loose, wet	11		
					-2		Type of Filter Pack- 20/30 Sand
				Clayey Sand (SC) Clayey f sand, lt gray/tan, med dense, wet	12 -3		
				Silty Sand (SM) Silty fine to med sand, lt gray to tan, loose, wet	13		
					-5		
15				End of Log	15		
20							

PROJECT NUMBER	WELL NUMBER SHEET 1 OF 1

CH2MHILL

WELL COMPLETION DIAGRAM

PROJECT : LOCATION :

DRILLING CONTRACTOR :

DRILLING METHOD AND EQUIPMENT USED :

WATER LEVELS : START : END : LOGGER :

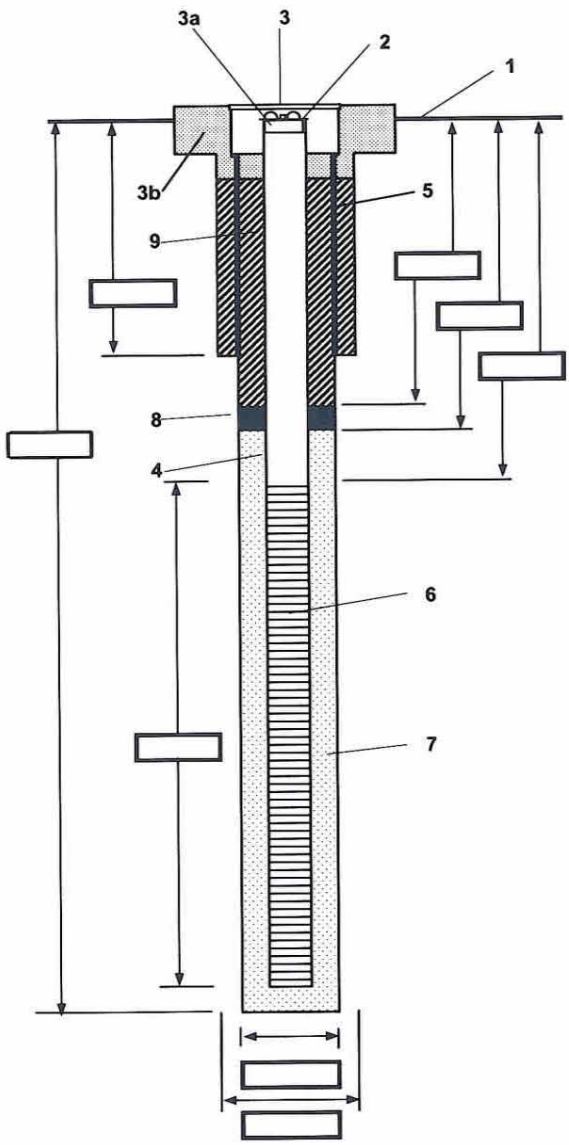

1- Ground elevation at well _____

2- Top of casing elevation _____

3- Wellhead protection cover type _____
   a) locking expansion plug _____
   b) concrete pad dimensions _____

4- Dia./type of well casing _____

5- Dia./type of surface casing _____

6- Type/slot size of screen _____

7- Type screen filter _____
   a) Quantity used _____

8- Type of seal _____
   a) Quantity used _____

9- Grout
   a) Grout mix used _____
   b) Method of placement _____
   c) Vol. of surface casing grout _____
   d) Vol. of well casing grout _____

Development method _____

Development time _____

Estimated purge volume _____

Comments _____

PROJECT NUMBER	WELL NUMBER	
328423.FI.MW.95	IR95-MW06	SHEET 1 OF 1

CH2MHILL

WELL COMPLETION DIAGRAM

PROJECT : Site 95-Jaybird Road LOCATION : MCB Camp Lejeune Jacksonville, North Carolina

DRILLING CONTRACTOR : Probe Tech.

DRILLING METHOD AND EQUIPMENT USED : 4 1/4" HAS

WATER LEVELS : START : 2/22/06 @ 10:00 END : 11:00 LOGGER : J Vaughn/CLT

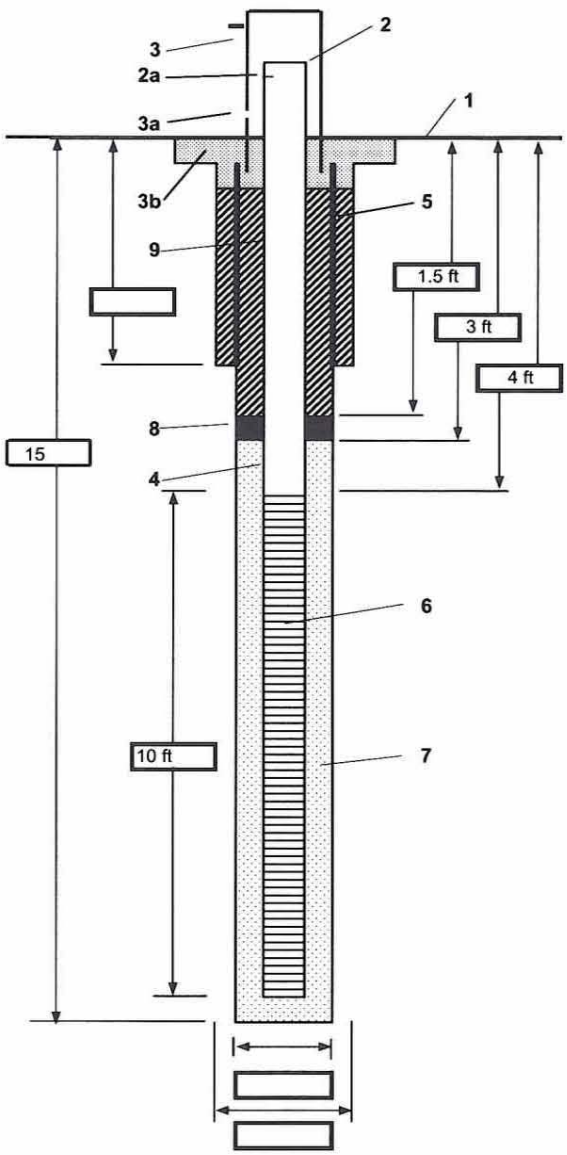

1- Ground elevation at well _____

2- Top of casing elevation _____
a) vent hole? _____

3- Wellhead protection cover type _____
a) weep hole? _____
b) concrete pad dimensions _____

4- Dia./type of well casing _____

5- Dia./type of surface casing _____

6- Type/slot size of screen 0.010" slot PVC Sch. 40

7- Type screen filter 20/30 Sand
a) Quantity used _____

8- Type of seal 3/8" bentonite hole plug
a) Quantity used _____

9- Grout
a) Grout mix used 95% Port Type I and 5% bentonite
b) Method of placement _____
c) Vol. of surface casing grout _____
d) Vol. of well casing grout _____

Development method _____

Development time _____

Estimated purge volume _____

Comments _____

CH2MHILL

Well Number: 95A-MW06

Client: NAVFAC
Project: Camp Lejeune
Location: Jacksonville, NC
Project Number: 328432

Driller: Probe Tech
Drilling Method: 4 1/4" HSA
Sampling Method: DPT Geoprobe
Logged by: J. Vaughan/CLT
Start/Finish Date: 2-22-06 09:40 / 2-22-06 11:00

Depth (ft)	Sample Info: Sample #	Sample Info: STP (6"-6"-6")	Soil Log	Soil Description	Depth / Elev	Well Drawing	Well Construction Notes
				Ground Surface	4		
0				**Silty Sand (SM)** Organic silty vf sand, dk brown, loose, moist	0		Type of Well Casing- 2 inch ID/Schedule 40 PVC
				Silty Sand (SM) Silty f sand, gray, loose, moist			Type of Grout- 95% Portland Type I and 5% Bentonite Type of Seal- 3/8" Bentonite Holeplug
5							Type of Screen- 0.010" Slot Schedule 40 PVC
					-4		
				Silty Sand (SM) Silty fine-med sand, tan, loose, wet	8		
10							Type of Filter Pack- 20/30 Sand
					-9		
				Clayey Sand (SC) Clayey f sand, lt gray, loose, wet	13		
					-11		
15				End of Log	15		
20							

PROJECT NUMBER	WELL NUMBER SHEET 1 OF 1

CH2MHILL

WELL COMPLETION DIAGRAM

PROJECT : LOCATION :

DRILLING CONTRACTOR :

DRILLING METHOD AND EQUIPMENT USED :

WATER LEVELS : START : END : LOGGER :

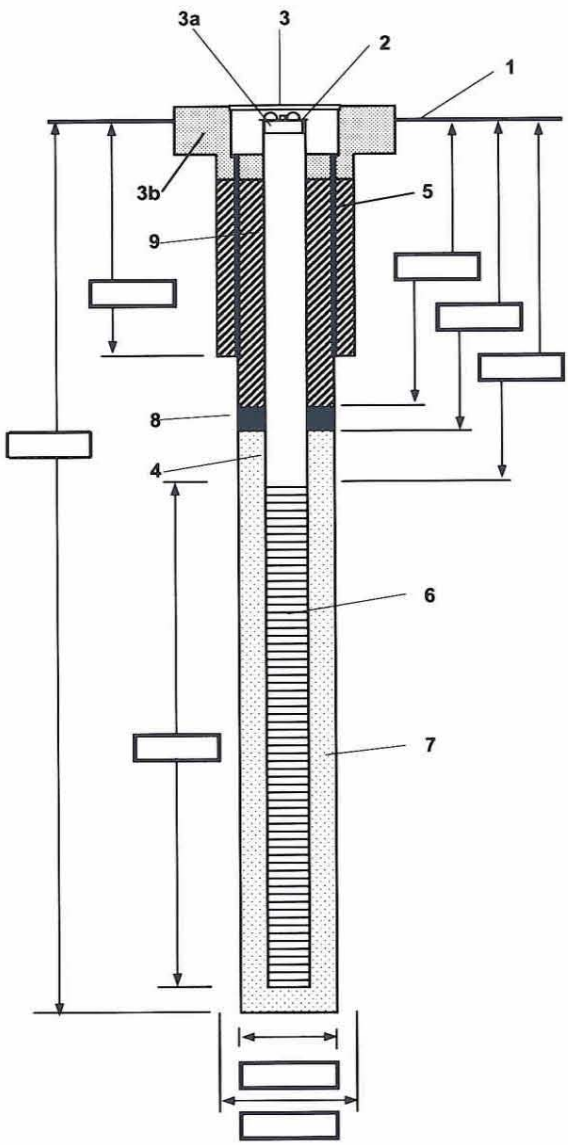

1- Ground elevation at well _____

2- Top of casing elevation _____

3- Wellhead protection cover type _____
a) locking expansion plug _____
b) concrete pad dimensions _____

4- Dia./type of well casing _____

5- Dia./type of surface casing _____

6- Type/slot size of screen _____

7- Type screen filter _____
a) Quantity used _____

8- Type of seal _____
a) Quantity used _____

9- Grout
a) Grout mix used _____
b) Method of placement _____
c) Vol. of surface casing grout _____
d) Vol. of well casing grout _____

Development method _____

Development time _____

Estimated purge volume _____

Comments _____

PROJECT NUMBER	WELL NUMBER	
328423.FI.MW.95	IR95B-MW01	SHEET 1 OF 1

CH2MHILL

WELL COMPLETION DIAGRAM

PROJECT : Site 95-Magnolia Road LOCATION : MCB Camp Lejeune Jacksonville, North Carolina

DRILLING CONTRACTOR : Probe Tech.

DRILLING METHOD AND EQUIPMENT USED : 4 1/4" HAS

WATER LEVELS : START : 7/12/2006 END : 7/12/06 LOGGER : J Vaughn/CLT

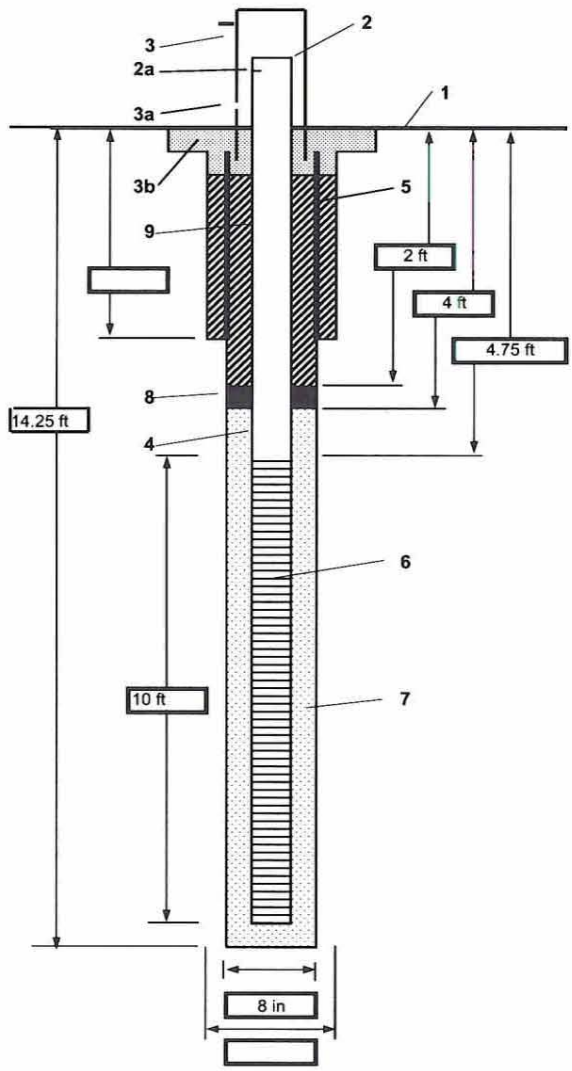

1- Ground elevation at well _____

2- Top of casing elevation _____
a) vent hole? _____

3- Wellhead protection cover type _____
a) weep hole? _____
b) concrete pad dimensions _____

4- Dia./type of well casing _____

5- Dia./type of surface casing _____

6- Type/slot size of screen 0.010" slot PVC Sch. 40

7- Type screen filter 20/30 Sand
a) Quantity used _____

8- Type of sea 3/8" bentonite hole plug
a) Quantity used _____

9- Grout
a) Grout mix used 95% Port Type I and 5% bentonite
b) Method of placement _____
c) Vol. of surface casing grout _____
d) Vol. of well casing grout _____

Development method _____

Development time _____

Estimated purge volume _____

Comments _____

CH2MHILL

Well Number: 95B-MW01

Client: NAVFAC
Project: Camp Lejeune
Location: Jacksonville, NC
Project Number: 328432

Driller: Prob Technology
Drilling Method: 4 1/4" HSA
Sampling Method: Geoprobe DPT
Logged by: J Vaughan/CLT
Start/Finish Date: 7-12-06 14:30 / 7-12-06 16:30

Depth (ft)	Sample Info: Sample #	Sample Info: STP (6"-6"-6")	Soil Log	Soil Description	Depth / Elev	Well Drawing	Well Construction Notes
				Ground Surface	22		
0				**Concrete** Concrete debris	0		Type of Well Casing- 2 inch ID/Schedule 40 PVC Type of Grout- 95% Portland Type I and 5% Bentonite
				Silty Sand (SM) Silty vf sand, 60% sand, 40% fines, trace clay, med-dark gray, loose, moist	20 2		Type of Seal- 3/8" Bentonite Holeplug
				Clayey Silty Sand (SC-SM) Clayey silty vf sand, tan, med dense, slightly plastic, moist			
				Clayey Silt (CL-ML) Clayey silt, 20% vf sand , tan, soft, slightly plastic, moist	17 5		
5				**Clay (CH)** Clay, fat abundant silty 25% vf sand, tan, stiff, plastic, moist	15 7		
				Silty Sand (SM) Silty vf-f sand, 80% sand, trace clay, lt gray w/ yellow-brown mottling, loose, moist	14 8		
				Sand (SP) Poorly graded vf-f sand, trace clay, lt gray-white, some yellow-brown mottling, loose, moist	12 10		Type of Screen- 0.010" Slot Schedule 40 PVC
10				**Silty Sand (SM)** Silty vf-f sand, 80% sand, 20% silt, tan w/ yellow-brown mottling, loose, moist			Type of Filter Pack- 20/30 Sand
				Silty Sand (SM) Silty vf-f sand, 80% sand, tan w/ increased yellow-brown mottling w/ some orange Feo2 banding, increased clay content, loose, wet			
15				**Clayey Sand (SC)** Clayey sand lenses @ 13.6-13.7', 13.9-14.3', and 14.5-14.6'	7 15		
				Clay (CL) Clay, trace silt, gray, soft to firm, low-med plasticity			
20							

PROJECT NUMBER	WELL NUMBER SHEET 1 OF 1

CH2MHILL

WELL COMPLETION DIAGRAM

PROJECT : LOCATION :

DRILLING CONTRACTOR :

DRILLING METHOD AND EQUIPMENT USED :

WATER LEVELS : START : END : LOGGER :

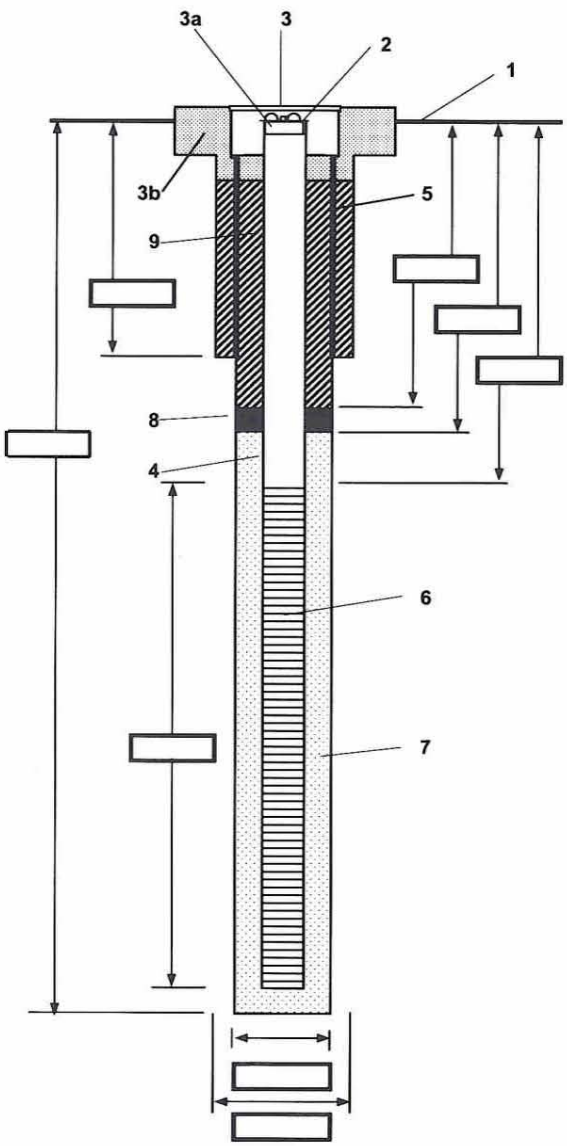

1- Ground elevation at well _____

2- Top of casing elevation _____

3- Wellhead protection cover type _____
   a) locking expansion plug _____
   b) concrete pad dimensions _____

4- Dia./type of well casing _____

5- Dia./type of surface casing _____

6- Type/slot size of screen _____

7- Type screen filter _____
   a) Quantity used _____

8- Type of seal _____
   a) Quantity used _____

9- Grout
   a) Grout mix used _____
   b) Method of placement _____
   c) Vol. of surface casing grout _____
   d) Vol. of well casing grout _____

Development method _____

Development time _____

Estimated purge volume _____

Comments _____

PROJECT NUMBER	WELL NUMBER	
328423.FI.MW.95	IR95B-MW02	SHEET 1 OF 1

CH2MHILL

WELL COMPLETION DIAGRAM

PROJECT : Site 95-Magnolia Road LOCATION : MCB Camp Lejeune Jacksonville, North Carolina

DRILLING CONTRACTOR : Probe Tech.

DRILLING METHOD AND EQUIPMENT USED : 4 1/4" HAS

WATER LEVELS : START : 7/12/2006 END : 7/12/06 LOGGER : J Vaughn/CLT

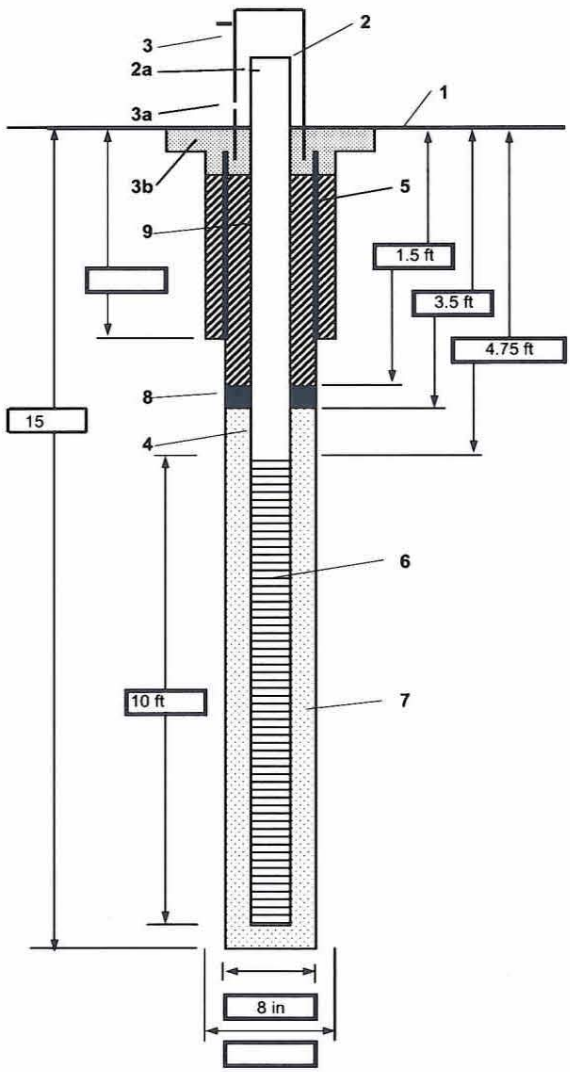

1- Ground elevation at well _____

2- Top of casing elevation _____
a) vent hole? _____

3- Wellhead protection cover type _____
a) weep hole? _____
b) concrete pad dimensions _____

4- Dia./type of well casing _____

5- Dia./type of surface casing _____

6- Type/slot size of screen 0.010" slot PVC Sch. 40

7- Type screen filter 20/30 Sand
a) Quantity used _____

8- Type of seal 3/8" bentonite hole plug
a) Quantity used _____

9- Grout
a) Grout mix used 95% Port Type I and 5% bentonite
b) Method of placement _____
c) Vol. of surface casing grout _____
d) Vol. of well casing grout _____

Development method _____

Development time _____

Estimated purge volume _____

Comments _____

CH2MHILL

Well Number: 95B-MW02

Client: NAVFAC
Project: Camp Lejeune
Location: Jacksonville, NC
Project Number: 328432

Driller: Probe Technology
Drilling Method: 4 1/4" HSA
Sampling Method: Geoprobe DPT
Logged by: J Vaughan/CLT
Start/Finish Date: 7-12-06 11:25 / 7-12-06 11:50

Depth (ft)	Sample Info: Sample #	Sample Info: STP (6"-6"-6")	Soil Log	Soil Description	Depth / Elev	Well Drawing	Well Construction Notes
				Ground Surface	22		
0				**Topsoil** Topsoil, organic rich	0		Type of Well Casing- 2 inch ID/Schedule 40 PVC Type of Grout- 95% Portland Type I and 5/% Bentonite
				Silty Sand (SM) Silty vf sand, 60% sand, 35% silt, trace clay, med brown, med dense, moist	21 2		PID: 0.0 ppm
				Clayey Silt (CL-ML) Clayey silt, trace vf sand, med brown, firm, med plastic, moist	19 4		Type of Seal- Granular Bentonite
5				**Clay (CH)** Clay, fat, trace silt, lt brown, orange-brown mottling, stiff, very plastic	17 5		0.0 ppm
				Silty Sand (SM) Silty vf-f sand, 70% sand, 5% silt, trace clay, tan, trace yellow brown and black mottling, lose, moist	15 7		
				Sand (SP) Poorly graded sand, trace silt, vf-f sand, lt gray, loose, moist	13		0.0 ppm
10				**Silty Clayey Sand (SC-SM)** Silty clayey sand, 60-80% f sand, lt gray orange-brown banded, banding represents clay zones, loose **Clay (CL)** Clay lt gray, firm, med plastic, wet lenses @ 10.25-10.35', 12.2-12.4', and 13.3-13.5'	9 7		Type of Screen- 0.010" Slot Schedule 40 PVC Collect Shelby Tube 11-12.75' 0.0 ppm Type of Filter Pack- 20/30 Sand
15				**Clay (CL)** Clay, gray, soft, low-med plastic, wet	15		0.0 ppm
20							

PROJECT NUMBER	WELL NUMBER SHEET 1 OF 1

CH2MHILL

WELL COMPLETION DIAGRAM

PROJECT : LOCATION :

DRILLING CONTRACTOR :

DRILLING METHOD AND EQUIPMENT USED :

WATER LEVELS : START : END : LOGGER :

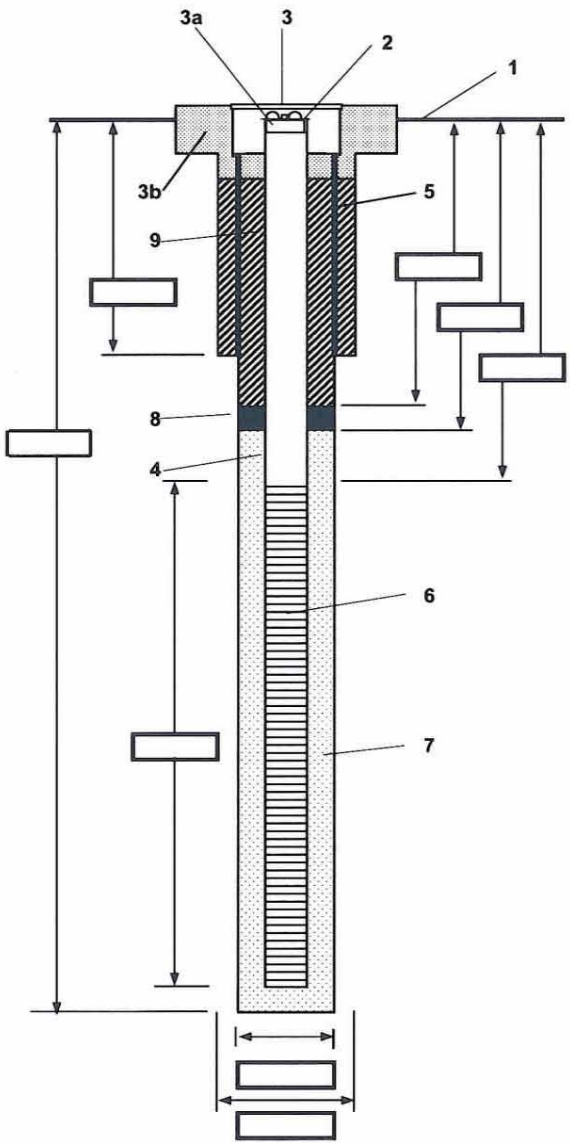

1- Ground elevation at well _____

2- Top of casing elevation _____

3- Wellhead protection cover type _____
   a) locking expansion plug _____
   b) concrete pad dimensions _____

4- Dia./type of well casing _____

5- Dia./type of surface casing _____

6- Type/slot size of screen _____

7- Type screen filter _____
   a) Quantity used _____

8- Type of seal _____
   a) Quantity used _____

9- Grout
   a) Grout mix used _____
   b) Method of placement _____
   c) Vol. of surface casing grout _____
   d) Vol. of well casing grout _____

Development method _____

Development time _____

Estimated purge volume _____

Comments _____

PROJECT NUMBER	WELL NUMBER	
328423.FI.MW.95	IR95B-MW03	SHEET 1 OF 1

CH2MHILL

WELL COMPLETION DIAGRAM

PROJECT : Site 95-Magnolia Road LOCATION : MCB Camp Lejeune Jacksonville, North Carolina

DRILLING CONTRACTOR : Probe Tech.

DRILLING METHOD AND EQUIPMENT USED : 4 1/4" HAS

WATER LEVELS : START : 7/12/2006 END : 7/12/06 LOGGER : J Vaughn/CLT

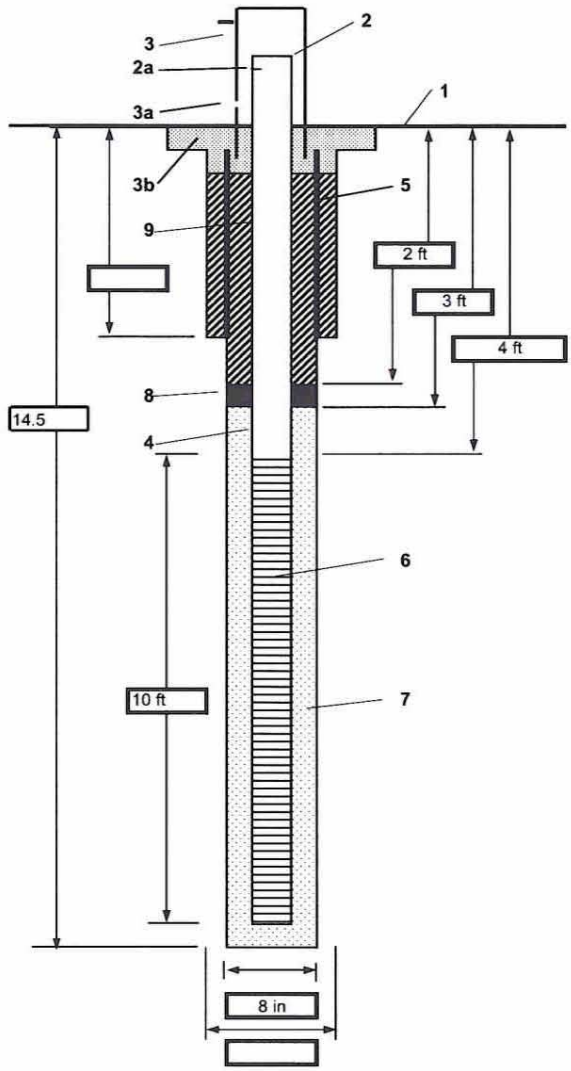

1- Ground elevation at well _____

2- Top of casing elevation _____
a) vent hole? _____

3- Wellhead protection cover type _____
a) weep hole? _____
b) concrete pad dimensions _____

4- Dia./type of well casing _____

5- Dia./type of surface casing _____

6- Type/slot size of screen 0.010" slot PVC Sch. 40

7- Type screen filter 20/30 Sand
a) Quantity used _____

8- Type of seal 3/8" bentonite hole plug
a) Quantity used _____

9- Grout
a) Grout mix used 95% Port Type I and 5% bentonite
b) Method of placement _____
c) Vol. of surface casing grout _____
d) Vol. of well casing grout _____

Development method _____

Development time _____

Estimated purge volume _____

Comments _____

CH2MHILL

Well Number: 95B-MW03

Client: NAVFAC
Project: Camp Lejeune
Location: Jacksonville, NC
Project Number: 328432

Driller: Probe Technology
Drilling Method: 4 1/4" HSA
Sampling Method: Geoprobe DPT
Logged by: J Vaughan/CLT
Start/Finish Date: 7-12-06 09:55 / 7-12-06 11:00

Depth (ft)	Sample Info: Sample #	Sample Info: STP (6"-6"-6")	Soil Log	Soil Description	Depth / Elev	Well Drawing	Well Construction Notes
				Ground Surface	21		
0				**Topsoil** Organic topsoil, dk brown	0		Type of Well Casing- 2 inch ID/Schedule 40 PVC
				Silty Sand (SM) Siltyvf sand, 40% silt, med gray, med dense, not plastic	19 / 1		Type of Grout- 95% Portland Type I and 5% Bentonite
				Clayey Sand (SC) Clayey vf sand, 30% clay, 20% silt, 50% sand, med brown, med dense, med plastic, micaceous	17 / 3 / 16		Type of Seal- 3/8" Bentonite Holeplug
5				**Clayey Silt (CL-ML)** Clayey silt, 15% vf sand, tan-med brown, stiff, med plastic, moist	4 / 15		
				Clay (CH) Clay, fat, trace silt and vf sand, yellow-brown, stiff, med plastic, moist	6		
				Silty Sand (SM) Silty vf sand, 35% silt, 60% sand, trace clay, tan, loose, not plastic, moist			
				Sand (SP) Poorly graded vf-f sand, trace silt, trace clay, lt gray w/ brown and yellow mottling, moist	11 / 10		Type of Screen- 0.010" Slot Schedule 40 PVC
10				**Silty Sand (SM)** Silty vf-f sand, 85% sand, 15% silt, trace clay, lt gray, loose, wet	9 / 11		Type of Filter Pack- 20/30 Sand
				Silty Sand (SM) Silty vf-f sand, 80% sand, 15% silt, orange brown, loose, wet	8 / 13		
				Sandy Clay (CL) Sandy clay lense, 40% vf sand, med gray, orange-brown mottling, soft, wet	6 / 15		
15				**Silty Sand (SM)** Silty vf-f sand, 80% sand, 15% silt, orange brown, loose, wet			
				Sandy Clay (CL) Sandy clay lense, 40% vf sand, red brown, soft, wet			
				Silty Sand (SM) Silty vf-f sand, 80% sand, 15% silt, orange brown, red brown band @ 13.8-14', loose, wet			
20							

PROJECT NUMBER	WELL NUMBER SHEET 1 OF 1

CH2MHILL

WELL COMPLETION DIAGRAM

PROJECT : LOCATION :

DRILLING CONTRACTOR :

DRILLING METHOD AND EQUIPMENT USED :

WATER LEVELS : START : END : LOGGER :

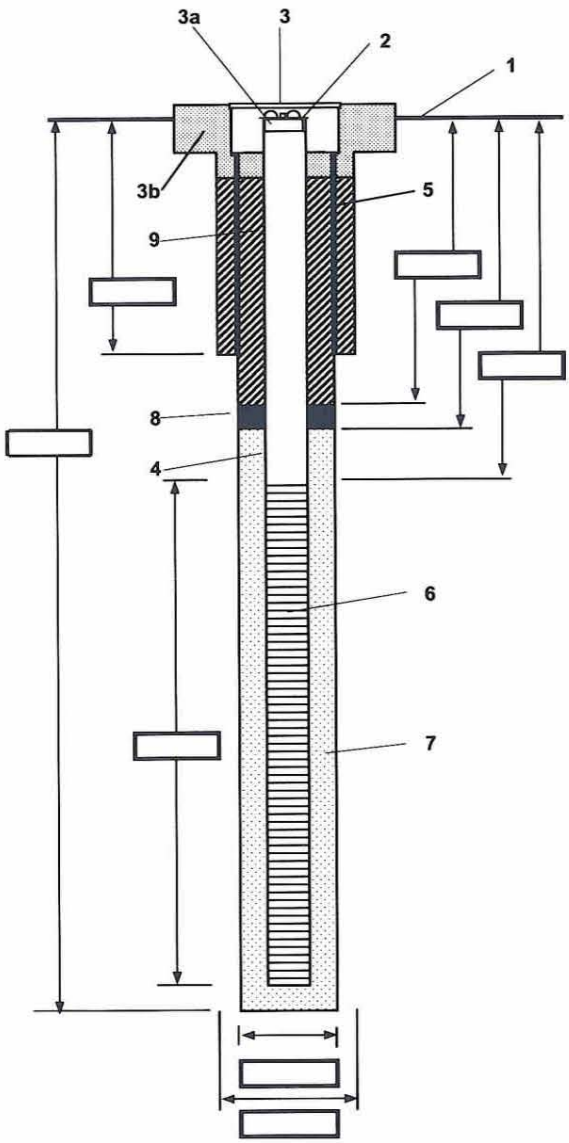

1- Ground elevation at well _____

2- Top of casing elevation _____

3- Wellhead protection cover type _____
   a) locking expansion plug _____
   b) concrete pad dimensions _____

4- Dia./type of well casing _____

5- Dia./type of surface casing _____

6- Type/slot size of screen _____

7- Type screen filter _____
   a) Quantity used _____

8- Type of seal _____
   a) Quantity used _____

9- Grout
   a) Grout mix used _____
   b) Method of placement _____
   c) Vol. of surface casing grout _____
   d) Vol. of well casing grout _____

Development method _____

Development time _____

Estimated purge volume _____

Comments _____

PROJECT NUMBER	WELL NUMBER	
328423.FI.MW.95	IR95-MW01	SHEET 1 OF 1

CH2MHILL

WELL COMPLETION DIAGRAM

PROJECT : Site 95-Lyman Road LOCATION : MCB Camp Lejeune Jacksonville, North Carolina

DRILLING CONTRACTOR : Probe Tech.

DRILLING METHOD AND EQUIPMENT USED : 4 1/4" HAS

WATER LEVELS : START : 2/21/06 @ 14:30 END : 15:15 LOGGER : J Vaughn/CLT

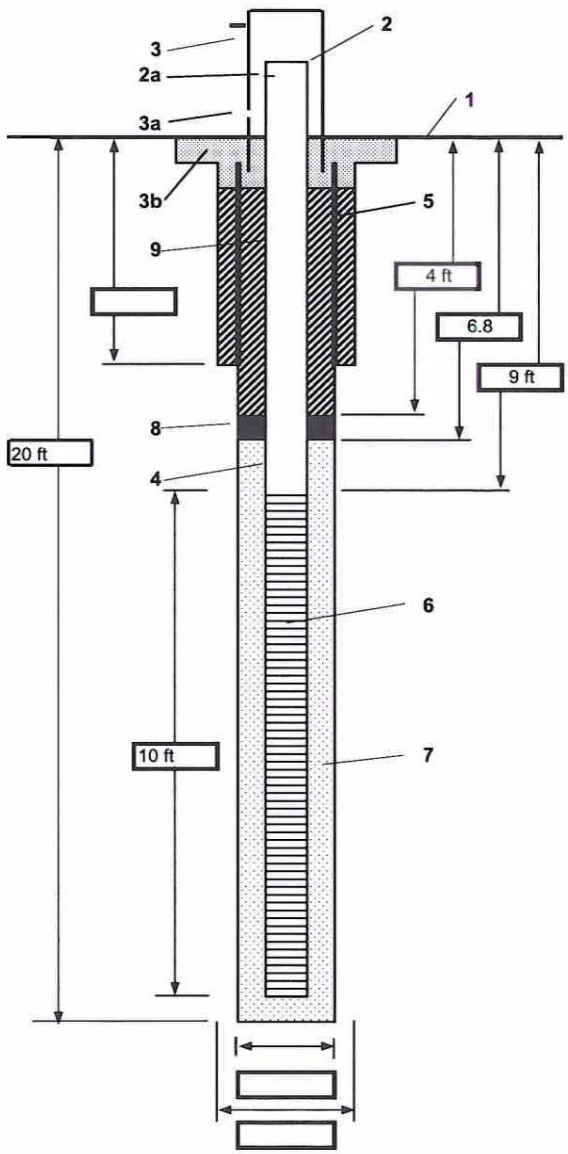

1- Ground elevation at well _____

2- Top of casing elevation _____
a) vent hole? _____

3- Wellhead protection cover type _____
a) weep hole? _____
b) concrete pad dimensions _____

4- Dia./type of well casing _____

5- Dia./type of surface casing _____

6- Type/slot size of screen 0.010" slot PVC Sch. 40

7- Type screen filter 20/30 Sand
a) Quantity used _____

8- Type of seal 3/8" bentonite hole plug
a) Quantity used _____

9- Grout
a) Grout mix used 95% Port Type I and 5% bentonite
b) Method of placement _____
c) Vol. of surface casing grout _____
d) Vol. of well casing grout _____

Development method _____

Development time _____

Estimated purge volume _____

Comments _____

CH2MHILL

Well Number: 95C-MW01

Client: NAVFAC
Project: Camp Lejeune
Location: Jacksonville, NC
Project Number: 328432

Driller: Probe Tech.
Drilling Method: 4 1/4" HSA
Sampling Method: DPT Geoprobe
Logged by: J. Vaughan/CLT
Start/Finish Date: 2-21-06 13:40 / 2-21-06 15:00

Depth (ft)	Sample Info: Sample #	Sample Info: STP (6"-6"-6")	Soil Log	Soil Description	Depth / Elev	Well Drawing	Well Construction Notes
				Ground Surface	30		
0				**Silty Sand (SM)** Organic silty sand, dk brown, loose, moist	0		Type of Well Casing -2 inch ID/Schedule 40 PVC
				Silty Sand (SM) Silty f sand, tan to lt gray, med dense, moist			Type of Grout- 95% Portland Type I and 5% Bentonite
5					24		Type of Seal- 3/8" Bentonite Holeplug
				Silty Clayey Sand (SC/SM) Silty clayey f sand, tan to lt gray, med dense, moist	6		
					21		
10				**Silty Sand (SM)** Silty f sand, trace clay, lt gray, loose, wet	10		Type of Screen- 0.010" Slot Schedule 40 PVC
					16		
				Clayey Sand (SC) Clayey f sand, lt gray, med dense, wet	14		
15					15		Type of Filter Pack- 20/30 Sand
				End of Log	15		
20							

PROJECT NUMBER	WELL NUMBER SHEET 1 OF 1

CH2MHILL

WELL COMPLETION DIAGRAM

PROJECT : LOCATION :

DRILLING CONTRACTOR :

DRILLING METHOD AND EQUIPMENT USED :

WATER LEVELS : START : END : LOGGER :

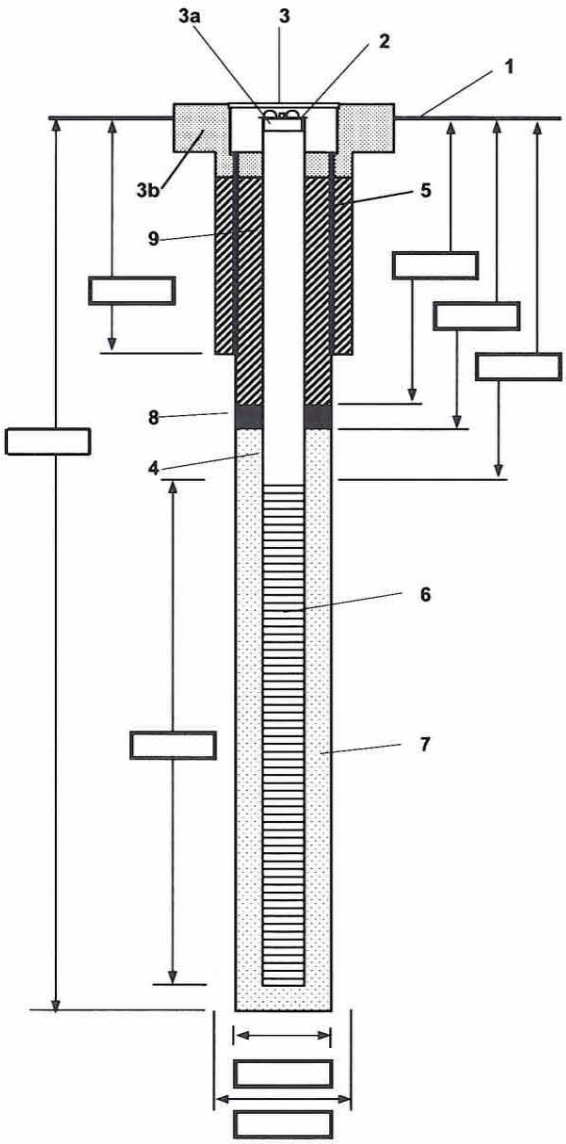

1- Ground elevation at well _____

2- Top of casing elevation _____

3- Wellhead protection cover type _____
   a) locking expansion plug _____
   b) concrete pad dimensions _____

4- Dia./type of well casing _____

5- Dia./type of surface casing _____

6- Type/slot size of screen _____

7- Type screen filter _____
   a) Quantity used _____

8- Type of seal _____
   a) Quantity used _____

9- Grout
   a) Grout mix used _____
   b) Method of placement _____
   c) Vol. of surface casing grout _____
   d) Vol. of well casing grout _____

Development method _____

Development time _____

Estimated purge volume _____

Comments _____

PROJECT NUMBER	WELL NUMBER	
328423.FI.MW.95	IR95-MW02	SHEET 1 OF 1

CH2MHILL

WELL COMPLETION DIAGRAM

PROJECT : Site 95-Lyman Road LOCATION : MCB Camp Lejeune Jacksonville, North Carolina

DRILLING CONTRACTOR : Probe Tech.

DRILLING METHOD AND EQUIPMENT USED : 4 1/4" HAS

WATER LEVELS : START : 2/21/06 @ 12:15 END : 13:30 LOGGER : J Vaughn/CLT

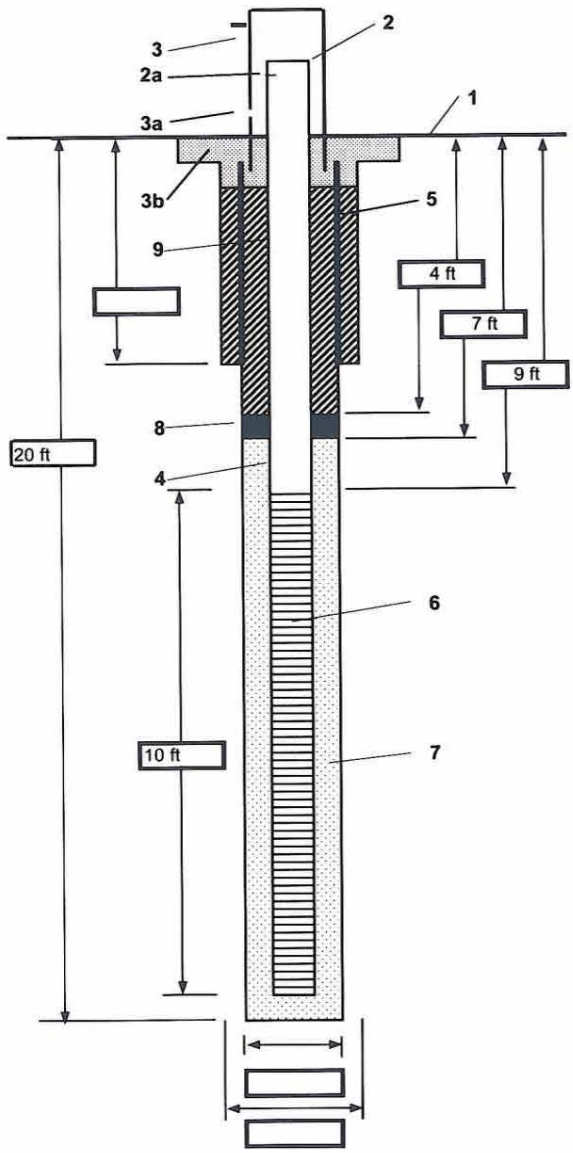

1- Ground elevation at well _____

2- Top of casing elevation _____
a) vent hole? _____

3- Wellhead protection cover type _____
a) weep hole? _____
b) concrete pad dimensions _____

4- Dia./type of well casing _____

5- Dia./type of surface casing _____

6- Type/slot size of screen 0.010" slot PVC Sch. 40

7- Type screen filter 20/30 Sand
a) Quantity used _____

8- Type of seal 3/8" bentonite hole plug
a) Quantity used _____

9- Grout
a) Grout mix used 95% Port Type I and 5% bentonite
b) Method of placement _____
c) Vol. of surface casing grout _____
d) Vol. of well casing grout _____

Development method _____

Development time _____

Estimated purge volume _____

Comments _____

CH2MHILL

Well Number: 95C-MW02

Client: NAVFAC
Project: Camp Lejeune
Location: Jacksonville, NC
Project Number: 328432

Driller: Probe Tech.
Drilling Method: 4 1/4" HSA
Sampling Method: DPT Geoprobe
Logged by: J. Vaughan/CLT
Start/Finish Date: 2-21-06 12:15 / 2-21-06 13:30

Depth (ft)	Sample Info: Sample #	Sample Info: STP (6"-6"-6")	Soil Log	Soil Description	Depth / Elev	Well Drawing	Well Construction Notes
				Ground Surface	32		
0				**Silty Sand (SM)** Organic rich silty v. fine-grained sand, dark brown, moist, loose	0		Type of Well Casing- 2 inch ID/Schedule 40 PVC
				Silty Sand (SM) Silty v. fine-grained sand, tan, moist, loose			Type of Grout- 95% Portland Type I and 5% Bentonite
					28		
5				**Silty Sand with Clay (SC-SM)** Silty v. fine-grained sand with clay, tan, moist, med. dense	5		Type of Seal- 3/8" Bentonite Holeplug
					22		
10				**Silty Sand (SM)** Silty v. fine-grained sand, light gray with some iron stained orange mottling, wet, loose	10		Type of Screen- 0.010" Slot Schedule 40 PVC
							Type of Filter Pack- 20/30 Sand
					17		
15				End of Log	15		
20							

PROJECT NUMBER	WELL NUMBER SHEET 1 OF 1

CH2MHILL

WELL COMPLETION DIAGRAM

PROJECT : LOCATION :

DRILLING CONTRACTOR :

DRILLING METHOD AND EQUIPMENT USED :

WATER LEVELS : START : END : LOGGER :

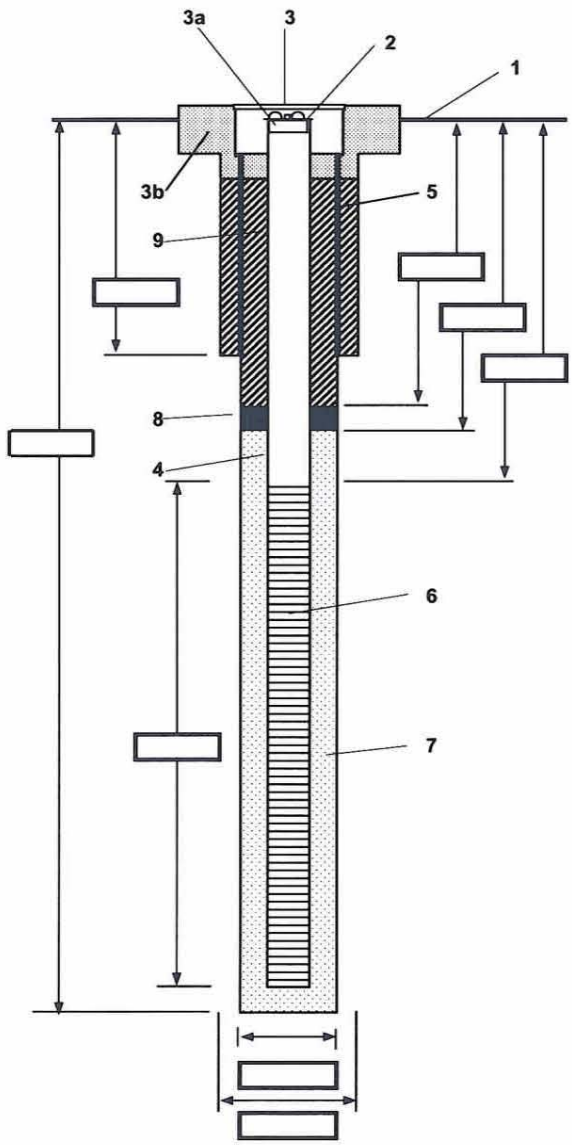

1- Ground elevation at well _____

2- Top of casing elevation _____

3- Wellhead protection cover type _____
   a) locking expansion plug _____
   b) concrete pad dimensions _____

4- Dia./type of well casing _____

5- Dia./type of surface casing _____

6- Type/slot size of screen _____

7- Type screen filter _____
   a) Quantity used _____

8- Type of seal _____
   a) Quantity used _____

9- Grout
   a) Grout mix used _____
   b) Method of placement _____
   c) Vol. of surface casing grout _____
   d) Vol. of well casing grout _____

Development method _____

Development time _____

Estimated purge volume _____

Comments _____

PROJECT NUMBER	WELL NUMBER	
328423.FI.MW.95	IR95-MW03	SHEET 1 OF 1

CH2MHILL

WELL COMPLETION DIAGRAM

PROJECT : Site 95-Lyman Road LOCATION : MCB Camp Lejeune Jacksonville, North Carolina

DRILLING CONTRACTOR : Probe Tech.

DRILLING METHOD AND EQUIPMENT USED : 4 1/4" HAS

WATER LEVELS : START : 2/21/06 @ 10:10 END : 11:20 LOGGER : J Vaughn/CLT

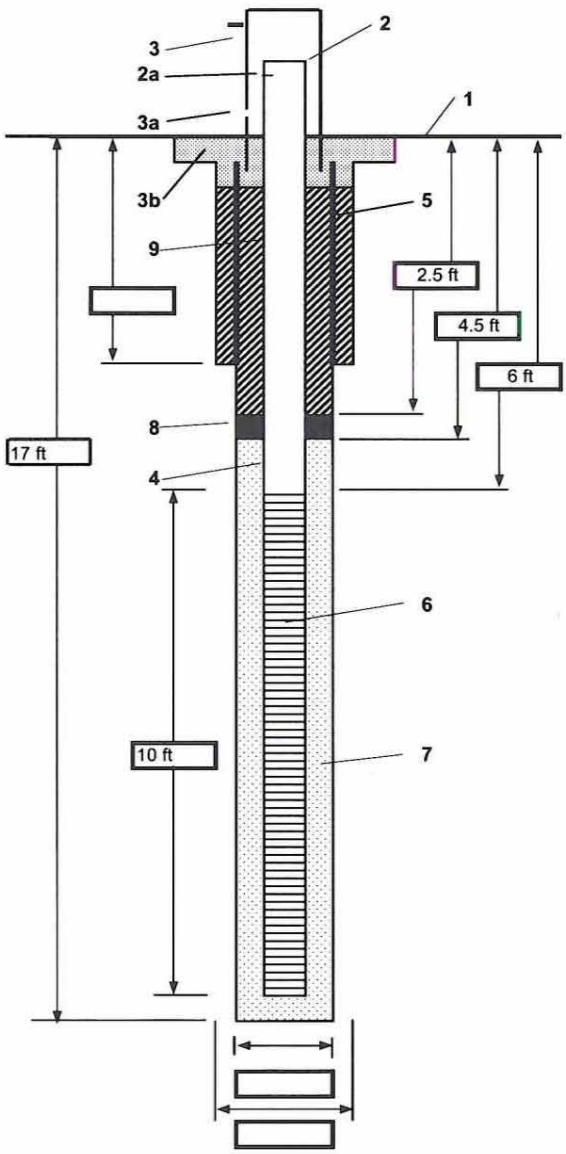

1- Ground elevation at well _____

2- Top of casing elevation _____
a) vent hole? _____

3- Wellhead protection cover type _____
a) weep hole? _____
b) concrete pad dimensions _____

4- Dia./type of well casing _____

5- Dia./type of surface casing _____

6- Type/slot size of screen 0.010" slot PVC Sch. 40

7- Type screen filter 20/30 Sand
a) Quantity used _____

8- Type of seal 3/8" bentonite hole plug
a) Quantity used _____

9- Grout
a) Grout mix used 95% Port Type I and 5% bentonite
b) Method of placement _____
c) Vol. of surface casing grout _____
d) Vol. of well casing grout _____

Development method _____

Development time _____

Estimated purge volume _____

Comments _____

CH2MHILL

Well Number: 95C-MW03

Client: NAVFAC
Project: Camp Lejeune
Location: Jacksonville, NC
Project Number: 328432

Driller: Probe Tech.
Drilling Method: 4 1/4" HSA
Sampling Method: DPT Geoprobe
Logged by: J. Vaughan/CLT
Start/Finish Date: 2-21-06 10:10 / 2-21-06 11:15

Depth (ft)	Sample Info: Sample #	Sample Info: STP (6"-6"-6")	Soil Log	Soil Description	Depth / Elev	Well Drawing	Well Construction Notes
				Ground Surface	33		
0				**Silty Sand (SM)** Organic rich silty v. fine-grained sand, dark brown, moist, loose	0		Type of Well Casing- 2 inch ID/Schedule 40 PVC
				Silty Sand (SM) Silty v. fine-grained sand, gray, moist, loose			Type of Grout- 95 % Portland Type I and 5% Bentonite
				Silty Sand (SM) Silty v. fine-grained sand some clay, tan, moist, dense			Type of Seal- 3/8" Bentonite holeplug
5					26		
				Sandy Silt (ML) V. fine-grained sandy silt some clay,tan to light gray, moist, stiff	7 25 8		
				Silty Sand (SM) Silty sand with clay, light gray, wet, med. dense			
10							Type of Screen- 0.010" Slot Schedule 40 PVC
							Type of Filter Pack- 20/30 Sand
					19		
				Clayey Sand (SC) Clayey fine-grained sand, light gray, wet, loose	14 18 15		
15				End of Log			
20							

Appendix E

Groundwater Assessment Chain of Custody Forms

E-1 Jaybird Road
E-2 Magnolia Road
E-3 Lyman Road

CH2MHILL

GROUNDWATER SAMPLING DATA SHEET

Client: MCB CL
Location: Site 95 Jaybird Road
Event:
Date: 7/31/06
Weather: Sunny mid 90s

Project Number: 327847.FI.FQ.95
Well ID: IR95-MW01JR (MW04)
Sample ID: IR95-GW01JR-06C
Sampling Team: David Dry, James Frank

Total Depth: 16.54 FT.(BTOC)
Depth to water: (-) 7.80 FT.(BTOC)
Water Column: 8.74 FT.
(x) 0.163 GAL/FT.
Well Volume: 1.424 GAL. x3 = 4.27
Total Purge Vol.: ~~4.27~~ GAL. 7.5

Purge Device: peristaltic pump new tubing

Measuring Device: electronic probe
Date and Time: 7/31/06 1525

Well Dia. (inches)	Volume (gallons/foot)
1	0.041
1.25	0.064
2	0.163
4	0.653

SAMPLE DATA

Date: 7/31/06 Time: 1720	Temp. °C	Cond. mS/cm	DO mg/L	pH SU	ORP mV	Turbidity NTU	Other: TDS	Color / Odor / Comments DTW
Method:	19.78	0.190	2.14	5.70	-84	~~9.98~~ 65.8	0.12	8.07 Clear

FIELD PARAMETERS

Time	Purge Vol. (gals)	Temp. °C	Cond. mS/cm	DO mg/L	pH SU	ORP mV	Turbidity NTU	Other: TDS TDS	Color / Odor / Comments DTW
1600	0	21.17	0.323	0.00	5.91	-84	153.0	0.21	
1605	0.5	20.87	0.326	0.00	5.90	-83	110.0	0.21	8.10'
1610	1.0	20.44	0.313	0.00	5.90	-80	99.7	0.20	8.10'
1615	1.5	20.15	0.295	0.00	5.88	-79	104.0	0.19	8.10'
1620	2.0	20.03	0.273	0.00	5.82	-74	90.5	0.18	8.10'
1625	2.5	19.79	0.246	0.67	5.78	-72	75.9	0.16	8.10'
1630	3.0	19.88	0.239	0.89	5.76	-73	118.0	0.15	8.09'
1635	3.5	19.90	0.226	1.17	5.76	-74	95.4	0.15	8.09'
1645	4.5	19.80	0.217	1.40	5.74	-74	101.0	0.14	8.08'
1655	5.5	19.75	0.204	1.78	5.72	-77	69.7	0.13	8.07'
1705	6.5	19.74	0.197	1.87	5.72	-81	64.7	0.13	8.07'

Sample information: method, container number, size, and type, preservative used.

1715 7.5 Analysis	19.78 0.190	2.14 Preservative	5.70 -84	65.8 0.12 Container Requirements	8.07 # of containers
VOC		HCl		40 mL	2
SVOC		—		1 L	2
PCB		—		1 L	2
Pest		—		1 L	2
TOC		HCl		40 mL	1
Alk, Anions, Ferrous, Sulfide, Total, Zinc Acetate, NO_3				500 mL, 250 mL, 250 mL	1, 1, 1
RSK 175		HCl		40 mL	2

Observations/Notes:
Tubing set x 12'. Turbidity = 9.98 NTU
began pumping @ 1545 Ferrous = 1.8 mg/L
collected sample at 1720

380 mL/min flowrate

IR95-GW01D-JR-06C

MS/MSD | Duplicate ID No.: ~~IR95-GW01JR-06~~

Signature(s): David W. Dry

CH2MHILL

GROUNDWATER SAMPLING DATA SHEET

Client: MCBCL
Location: Site 95 Jaybird Road
Event:
Date: 8/1/06
Weather: Sunny 80s humid

Project Number: 328432.FT.FQ.95
Well ID: IR95-MW02JR (MW
Sample ID: IR95-MW02JR-06C
Sampling Team: David Dry James Frank

Total Depth: 17.65 FT.(BTOC)
Depth to water: (-) 8.12 FT.(BTOC)
Water Column: 9.53 FT.
(x) 0.163 GAL/FT.
Well Volume: 1.55 GAL. x3= 4.66
Total Purge Vol.: 5.0 GAL.

Measuring Device: electronic probe
Date and Time: 8/1/06 7:50

Purge Device: peristaltic pump with new tubing

Well Dia. (inches)	Volume (gallons/foot)
1	0.041
1.25	0.064
2	0.163
4	0.653

SAMPLE DATA

Date: 8/1/06 Time: 9:05	Temp. °C	Cond. mS/cm	DO mg/L	pH SU	ORP mV	Turbidity NTU	Other: _____	Color / Odor / Comments
Method:	19.71	0.347	3.13	5.73	17	41.8	0.22	8.29'

FIELD PARAMETERS

Time	Purge Vol. (gals)	Temp. °C	Cond. mS/cm	DO mg/L	pH SU	ORP mV	Turbidity NTU	Other: TDS	Color / Odor / Comments
8:10	1.0	20.48	0.90	2.95	5.90	-6	209.0	0.6	DTW 8.27'
8:20	2.0	19.97	2.61	1.68	5.86	16	101.0	1.7	8.28'
8:30	3.0	19.73	0.842	2.40	5.81	9	65.1	0.47	8.28'
8:40	3.0	19.72	0.497	2.77	5.77	23	51.4	0.32	8.28'
8:50	4.0	19.62	0.360	3.12	5.74	14	38.6	0.25	8.29'
9:00	5.0	19.71	0.347	3.13	5.73	17	41.8	0.22	8.29'

Sample information: method, container number, size, and type, preservative used.

Analysis	Preservative	Container requirements	No. of containers
VOC	HCl	40mL	2
SVOC	—	1L	2
PCB	—	1L	2
Pest	—	1L	2
TOC, RSK-175	HCl	40mL	3
Alk Anions Ferrous	—	500mL	1
Sulfide, Ferric	Zinc Acetate, HNO_3	250mL	2

Observations/Notes:
Tubing set at ≈13'
began pumping at 8:00
Sample collected at
380 mL/min flowrate

Turbidity = 4.15 - Hach meter
Ferrous = 1.0 mg/L

MS/MSD
Duplicate ID No.:

Signature(s): David V. Dry

CH2MHILL

GROUNDWATER SAMPLING DATA SHEET

Client: NAVFAC CTO - 105
Location: MCB CAMP LEJEUNE
Event: SITE 95 GW SAMPLING
Date: 7-31-06
Weather: 3H's 100°

Project Number: 328432.FI.FQ.95
Well ID: 95-MW03 JR (MW06)
Sample ID: IR95-GW03-JR-06C
Sampling Team: G DRM / CCI
T FRANK / RSU

Total Depth: 14 FT.(BTOC)
Depth to water: (-) 2.59 FT.(BTOC)
Water Column: 11.41 FT.
(x) 0.163 GAL/FT.
Well Volume: 1.86 GAL. 9x
Total Purge Vol.: 5.58 GAL. 3x

Purge Device: PERISTALTIC

Measuring Device: HORIBA U-22
Date and Time:

Well Dia. (inches)	Volume (gallons/foot)
1	0.041
1.25	0.064
2	0.163
4	0.653

SAMPLE DATA

Date: 7-31-06 Time: 1645	Temp. °C	Cond. mS/cm	DO mg/L	pH SU	ORP mV	Turbidity NTU	Other: DTW	Color / Odor / Comments
Method: low flow	21.91	0.132	4.25	4.73	302	9.4	2.68	CLEAR

FIELD PARAMETERS

Time	Purge Vol. (gals)	Temp. °C	Cond. mS/cm	DO mg/L	pH SU	ORP mV	Turbidity NTU	Other: DTW	Color / Odor / Comments
1545	0	22.23	0.115	4.19	4.71	~~15~~ 278	~~270~~ 157	2.64	CLEAR
1555	1	22.18	0.158	3.82	4.71	277	83	2.65	CLEAR
1605	2	21.92	0.137	4.18	4.70	294	41.5	2.67	CLEAR
1615	3	21.85	0.135	4.28	4.73	298	34.6	2.67	CLEAR
1625	4	21.92	0.131	4.29	4.71	301	39.6	2.68	CLEAR
1635	5	21.93	0.128	4.30	4.73	304	10.4	2.67	CLEAR
1645	6	21.91	0.132	4.25	4.73	302	9.4	2.68	CLEAR

Sample information: method, container number, size, and type, preservative used.

Analysis	Preservative	Container requirements	No. of containers
✓ VOC	HCl	40 mL	82
✓ SVOC	—	1 L AMBER	2
✓ PEST	—	1 L AMBER	2
✓ PCB	—	1 L AMBER	2
TOC	HCl	40 mL	1
MEOH/E/E	HCl	40 mL	2
SULFIDE	NaOH ZnAc	250 mL	1
Fe^{3+}	HNO_3	250 mL	1
ALK/ANIONS Fe^{2+}	—	500 mL	1

Observations/Notes:

HACH Fe^{2+} 0.2 mg/L

TUBING SET @ 2ft ABOVE BOTTOM

MS/MSD - NORMAL # OF BOTTLES EXCEPT FOR SVOC/PEST/PCB 2/2/2 NOT 4/4/4 THEY WILL HAVE PLENTY OF VOLUME

MS/MSD ✓

Duplicate ID No.:

Signature(s): Samuel E Frank 7-31-06

MITKEM CORPORATION
175 Metro Center Boulevard
Warwick, Rhode Island 02886-1755
(401) 732-3400 • Fax (401) 732-3499
email: mitkem@mitkem.com

CHAIN-OF-CUSTODY RECORD

REPORT TO		INVOICE TO		
COMPANY CH2M Hill	PHONE 757-671-8315 ext 451	COMPANY CH2M Hill	PHONE	LAB PROJECT #:
NAME Felicia Arroyo	FAX	NAME	FAX	
ADDRESS 5700 Cleveland St. Suite 101		ADDRESS		TURNAROUND TIME: as per contract
CITY/ST/ZIP Virginia Beach Va.		CITY/ST/ZIP		

CLIENT PROJECT NAME:	CLIENT PROJECT #:	CLIENT P.O.#:
Site 95 (Jaybird Rd)	328432.FI.FQ.95	

REQUESTED ANALYSES

SAMPLE IDENTIFICATION	DATE/TIME SAMPLED	COMPOSITE	GRAB	WATER	SOIL	OTHER	LAB ID	# OF CONTAINERS	VOC (OLC 03.2)	TOC	MEE	Fe 2+ / Metals (ILM 05.2)	Sulfide	Alk / Anion / Fe 2+	SVOC (OLC 03.2)	Pest (OLC 03.2)	PCB (OLC 03.2)				COMMENTS
IR95-GW03-JR-06C	7/31/06 1645		X	X				36	6	3	6	3	3	3	4	4	4				Run MS/MSD
IR95-GW04-JR-06C	7/31/06 1720		X	X				11	2	1	2	1	1	1	1	1	1				
IR95-GW01D-JR-06C	7/31/06 1720		X	X				11	2	1	2	1	1	1	1	1	1				
IR95-GW02-JR-06C	8/1/06 0905		X	X				11	2	1	2	1	1	1	1	1	1				
IR95-EB-8106	8/1/06 1125		X	X				8	2	Run					2	2	2				
IR95-EB-8106	8/1/06 1135		X	X				8	2						2	2	2				
IR95-TB-8106	8/1/06 1115		X	X				2	2												
	/																				
	/																				
	/																				
	/																				
	/																				

TSF#	RELINQUISHED BY	DATE/TIME	ACCEPTED BY	DATE/TIME	ADDITIONAL REMARKS:	COOLER TEMP:
	[illegible]	[illegible] 13:30		/		
		/		/		
		/		/		

WHITE: LABORATORY COPY YEL[illegible]: REPORT COPY PINK: CLIENT'S COPY

MITKEM CORPORATION
175 Metro Center Boulevard
Warwick, Rhode Island 02886-1755
(401) 732-3400 • Fax (401) 732-3499
email: mitkem@mitkem.com

CHAIN-OF-CUSTODY RECORD

Page 1 of ___

REPORT TO		INVOICE TO		
COMPANY CH2M Hill	PHONE 757-671-8315 ext 451	COMPANY CH2M Hill	PHONE	LAB PROJECT #:
NAME Felicia Arroyo	FAX	NAME	FAX	
ADDRESS 5700 Cleveland St. Suite 101		ADDRESS		TURNAROUND TIME: as per contract
CITY/ST/ZIP Virginia Beach Va.		CITY/ST/ZIP		

CLIENT PROJECT NAME:	CLIENT PROJECT #:	CLIENT P.O.#:
Site 95 (Jaybird Rd)	328432.FI.FQ.F15	

REQUESTED ANALYSES

SAMPLE IDENTIFICATION	DATE/TIME SAMPLED	COMPOSITE	GRAB	WATER	SOIL	OTHER	LAB ID	# OF CONTAINERS	VOC (OLC 03.2)	TOC	MEE	Fe2+/Metals (ILM 05.3)	Sulfide	Alk/Anion/Fe2+	SVOC (OLC 03.2)	Pest (OLC 03.2)	PCB (OLC 03.2)				COMMENTS
IR95-GW03-JR-06C	7/31/06 1645		X	X				36	6	3	6	3	3	3	4	4	4				Run MS/MSD
IR95-GW04-JR-06C	7/31/06 1720		X	X				11	2	1	2	1	1	1	1	1	1				
IR95-GW01D-JR-06C	7/31/06 1720		X	X				11	2	1	2	1	1	1	1	1	1				
IR95-GW02-JR-06C	8/1/06 0905		X	X				11	2	1	2	1	1	1	1	1	1				
IR95-FB-8106	8/1/06 1125		X	X				8	2	X (pH)					2	2	2				
IR95-EB-8106	8/1/06 1135		X	X				8	2						2	2	2				
IR95-TB-8106	8/1/06 1115		X	X				2	2												
	/																				
	/																				
	/																				
	/																				
	/																				

TSF#	RELINQUISHED BY	DATE/TIME	ACCEPTED BY	DATE/TIME
	[illegible]	[illegible] 13:30		/
		/		/
		/		/

ADDITIONAL REMARKS:

COOLER TEMP:

WHITE: LABORATORY COPY YELLOW: REPORT COPY PINK: CLIENT'S COPY

CH2MHILL

GROUNDWATER SAMPLING DATA SHEET

Client: MCB CL
Location: Site 95 Magnolia Rd
Event:
Date: 8/1/06
Weather: HOT, sunny ~100°

Project Number: 328432.FI.FB.95
Well ID: IR95-MW01-MR
Sample ID: IR95-GW01-MR-06C
Sampling Team: David Dry, James Frank

Total Depth: 16.95 FT.(BTOC)
Depth to water: (-) 11.75 FT.(BTOC)
Water Column: 5.20 FT.
(x) 0.163 GAL/FT.
Well Volume: 0.85 GAL. x 3 = 2.54
Total Purge Vol.: GAL.

Measuring Device: electronic probe
Date and Time: 8/1/06 1535

Purge Device: peristaltic pump with new tubing

Well Dia. (inches)	Volume (gallons/foot)
1	0.041
1.25	0.064
2	0.163
4	0.653

SAMPLE DATA

Date: 8/1/06 Time: 1525	Temp. °C	Cond. mS/cm	DO mg/L	pH SU	ORP mV	Turbidity NTU	Other:	Color / Odor / Comments
Method:								

FIELD PARAMETERS

Time	Purge Vol. (gals)	Temp. °C	Cond. mS/cm	DO mg/L	pH SU	ORP mV	Turbidity NTU	Other: TDS	Color / Odor / Comments DTW
1540	0	19.48	0.120	5.22	4.77	230	380.0	0.08	11.85'
1550	1.0	19.78	0.105	2.41	4.32	268	358.0	0.07	11.85'
1600	2.0	19.54	0.096	1.93	4.28	248	230.0	0.06	11.85'
1610	3.0	19.65	0.099	1.90	4.26	186	156.0	0.06	

Sample information: method, container number, size, and type, preservative used.

Analysis	Preservative	Container requirements	No. of containers

Observations/Notes:
began pumping @ 1540
flowrate 380 mL/min
Sample collected at 1525

Turbidity = 3.13 NTU
Ferrous = 0.8 mg/L

MS/MSD | Duplicate ID No.:

Signature(s): David V. Dry

CH2MHILL

GROUNDWATER SAMPLING DATA SHEET

Client: NGB CL
Location: Site 95 Magnolia Rd
Event:
Date: 8/1/06
Weather: HOT ~100° sunny

Project Number: 327432.FI.FR.95
Well ID: FR95-MW02-MR
Sample ID: FR95-GW02-MR-06C
Sampling Team: David Dry, James Frank

Total Depth: 17.36 FT.(BTOC)
Depth to water: (-) 11.50 FT.(BTOC)
Water Column: 5.86 FT.
0.163 (x) ~~0.96~~ GAL/FT. X3 = 2.87
Well Volume: 0.96 GAL.
Total Purge Vol.: GAL.

Measuring Device: Electronic Probe
Date and Time: 8/1/06 1720

Purge Device: Peristaltic pump + new tubing

Well Dia. (inches)	Volume (gallons/foot)
1	0.041
~~1.25~~	~~0.064~~
2	0.163
4	0.653

SAMPLE DATA

Date: 8/1/06 Time: 1810	Temp. °C	Cond. mS/cm	DO mg/L	pH SU	ORP mV	Turbidity NTU	Other: TDS	Color / Odor / Comments
Method:	19.65	0.095	2.50	4.29	278	187.0	0.06	DTW 11.62 clear

FIELD PARAMETERS

Time	Purge Vol. (gals)	Temp. °C	Cond. mS/cm	DO mg/L	pH SU	ORP mV	Turbidity NTU	Other: TDS	Color / Odor / Comments
1735	0	19.61	0.105	4.62	4.35	303	232.0	0.07	DTW 11.61
1745	1.0	19.54	0.094	2.94	4.29	301	155.0	0.06	11.62
1755	2.0	19.53	0.094	2.58	4.29	300	170.0	0.06	11.62
1805	3.0	19.65	0.095	2.50	4.29	278	187.0	0.06	11.62

Sample information: method, container number, size, and type, preservative used.

Analysis	Preservative	Container requirements	No. of containers

Observations/Notes:
1735 started pumping
Turbidity 5.02 NTU
Ferrous 0.2 mg/L

flowrate = 385 mL/min Collected sample at 1810

MS/MSD
Duplicate ID No.:
Signature(s): David V. Dry

CH2MHILL

GROUNDWATER SAMPLING DATA SHEET

Client: NAVFAC CTO-185
Location: SITE 95 MAGNOLIA RD
Event: SITE 95 SAMPLING
Date: 8-1-06
Weather: 3H, 100°F

Project Number: 372183.FI.FQ 95
Well ID: 95-MW03
Sample ID: IR95-GW03-MR-060C
Sampling Team: D DRY / CAT
J FRANK / RDH

Total Depth: 14 FT.(BTOC)
Depth to water: (-) 11.3 FT.(BTOC)
Water Column: 2.7 FT.
(x) 0.163 GAL/FT.
Well Volume: 0.44 GAL. x
Total Purge Vol.: 1.32 GAL. 3x

Purge Device: PERISTALTIC

Measuring Device: HORIBA U-22 HERON DT
Date and Time:

Well Dia. (inches)	Volume (gallons/foot)
1	0.041
1.25	0.064
2	0.163
4	0.653

SAMPLE DATA

Date: 8-1-06 Time: 1615	Temp. °C	Cond. mS/cm	DO mg/L	pH SU	ORP mV	Turbidity NTU	Other: DTW	Color / Odor / Comments
Method: low flow	22.48	0.906	2.73	4.28	400	12.5	11.35	CLEAR

FIELD PARAMETERS

Time	Purge Vol. (gals)	Temp. °C	Cond. mS/cm	DO mg/L	pH SU	ORP mV	Turbidity NTU	Other: DTW	Color / Odor / Comments
1545	0	22.96	0.278	4.45	4.31	401	79.0	11.32	CLEAR
1555	1	22.60	0.775	4.01	4.28	404	36.0	11.35	CLEAR
1605	2	22.65	0.890	2.87	4.28	400	35.3	11.35	CLEAR
1615	3	22.48	0.906	2.73	4.28	400	12.5	11.35	CLEAR

Sample information: method, container number, size, and type, preservative used.

Analysis	Preservative	Container requirements	No. of containers
VOC	HCl	40 mL	2
TOC	HCl	40 mL	1
M/ELE	HCl	40 mL	2
SULFIDE	2mL NaOH	250 mL	1
Fe^{2+}/METALS	HNO_3	250 mL	1
ALK/ANION/Fe^{2+}	—	500 mL	1
SVOC	—	1 L AMB	2
PEST	—	1 L AMB	2
PCB	—	1 L AMB	2

Observations/Notes:

TUBING SET @ 1 ft ABOVE BOTTOM

HACH TURB 18.4 NTU CONDENSATION ON VIAL

HACH Fe^{2+} — mg/L

MS/MSD

Duplicate ID No.:

Signature(s): [signature] 8-1-06

MITKEM CORPORATION
175 Metro Center Boulevard
Warwick, Rhode Island 02886-1755
(401) 732-3400 • Fax (401) 732-3499
email: mitkem@mitkem.com

CHAIN-OF-CUSTODY RECORD

REPORT TO		INVOICE TO		
COMPANY CH2MHILL	PHONE x451 757-171-5815	COMPANY CH2MHILL	PHONE	LAB PROJECT #:
NAME Francia Arroyo	FAX	NAME As per Contract	FAX	
ADDRESS 5700 Cleveland St Ste 101		ADDRESS		TURNAROUND TIME: As per Contract
CITY/ST/ZIP Virginia Beach, VA		CITY/ST/ZIP		

CLIENT PROJECT NAME:	CLIENT PROJECT #:	CLIENT P.O.#:
Site 95 (TKO ED)	3-452.FT.Fac.95	

REQUESTED ANALYSES

SAMPLE IDENTIFICATION	DATE/TIME SAMPLED	COMPOSITE	GRAB	WATER	SOIL	OTHER	LAB ID	# OF CONTAINERS	CLP 8.3.2	TOC	MEG	Fe 2+/METALS Total As.2	SULFITE	Al/Ammo/Fe 2+	SVOC CLP 8.3.2	PEST CLP 8.3.2	TCB CLP 8.3.2				COMMENTS
IT95-GW01-MR-060	8-1-24 1625		x	x					2	1	2	1	1	1	2	2	2				
IT95-GW03-MR-060	8-1-24 1810		x	x					2	1	2	1	1	1	2	2	2				
IT95-GW03-MR-DUP	8-1-24 1615		x	x					2	1	2	1	1	1	2	2	2				
IT95-TB-YEA2206	8-3-24 dead			x					2												
	/																				
	/																				
	/																				
	/																				
	/																				
	/																				
	/																				
	/																				

TSF#	RELINQUISHED BY	DATE/TIME	ACCEPTED BY	DATE/TIME	ADDITIONAL REMARKS:	COOLER TEMP:
	James E Frank	8-3-24 1130		/		
		/		/		
		/		/		

WHITE: LABORATORY COPY YELLOW: REPORT COPY PINK: CLIENT'S COPY

MITKEM CORPORATION
175 Metro Center Boulevard
Warwick, Rhode Island 02886-1755
(401) 732-3400 • Fax (401) 732-3499
email: mitkem@mitkem.com

CHAIN-OF-CUSTODY RECORD

REPORT TO		INVOICE TO		
COMPANY CH2MHILL	PHONE x451 757-671-6315	COMPANY CH2MHILL	PHONE	LAB PROJECT #:
NAME Francia Arroyo	FAX	NAME As per Contract	FAX	
ADDRESS 5700 Cleveland St Ste 101		ADDRESS		TURNAROUND TIME: As per Contract
CITY/ST/ZIP Virginia Beach, VA		CITY/ST/ZIP		

CLIENT PROJECT NAME:	CLIENT PROJECT #:	CLIENT P.O.#:
Site 915 (TWG ED)	3-432.FT.Fw.915	

REQUESTED ANALYSES

SAMPLE IDENTIFICATION	DATE/TIME SAMPLED	COMPOSITE	GRAB	WATER	SOIL	OTHER	LAB ID	# OF CONTAINERS	TOC (EPA 415.2)	MEE	Fe2+/METALS (EPA 3.2)	SULFIDE	Al/Ni/Mn/Fe 2+	SVOC (EPA 8270)	PEST (EPA 8081)	TCE (EPA 8260)				COMMENTS
I915-GW01-MZ-ACC	8-1-24 1625		X	X					2	1	2	1	1	1	2	2	2			
I915-GW02-MZ-ACC	8-1-24 1810		X	X					2	1	2	1	1	1	2	2	2			
I915-GW03-MZ-ACC	8-1-24 1615		X	X					2	1	2	1	1	1	2	2	2			
I915-TB-VOA2-ACC	8-3-24 0800			X					2											
	/																			
	/																			
	/																			
	/																			
	/																			
	/																			
	/																			
	/																			

TSF#	RELINQUISHED BY	DATE/TIME	ACCEPTED BY	DATE/TIME
	James E Frank	8-3-24 1130		/
		/		/
		/		/

ADDITIONAL REMARKS:

COOLER TEMP:

WHITE: LABORATORY COPY YELLOW: REPORT COPY PINK: CLIENT'S COPY

MITKEM CORPORATION
175 Metro Center Boulevard
Warwick, Rhode Island 02886-1755
(401) 732-3400 • Fax (401) 732-3499
email: mitkem@mitkem.com

CHAIN-OF-CUSTODY RECORD

REPORT TO		INVOICE TO		
COMPANY CH2M Hill	PHONE 704-329-0072	COMPANY	PHONE	LAB PROJECT #:
NAME 4824 Parkway Plaza Blvd. Ste. 200	FAX 704-329-0041	NAME	FAX	
ADDRESS Jeremy Vaughan		ADDRESS		TURNAROUND TIME: Normal
CITY/ST/ZIP Charlotte, NC 28217		CITY/ST/ZIP		

CLIENT PROJECT NAME:	CLIENT PROJECT #:	CLIENT P.O.#:
CTO-105 Site 95 SI	328434	

REQUESTED ANALYSES

SAMPLE IDENTIFICATION	DATE/TIME SAMPLED	COMPOSITE	GRAB	WATER	SOIL	OTHER	LAB ID	# OF CONTAINERS	VOCs by OLC 3.2	SVOCs by OLC 3.2	Pest/PCBs by OLC 3.2	TCLM4,1 TCP Met.	Dissolved Gases	TOC	Ion Chrom/pH	COMMENTS
IR95-GW03-06A	3-9-06/1730		10	10				10	2	1	2	1	2	1	1	
IR95-GW01-06A	3-10-06/0910		22	22				22	6	3	6	3	2	1	1	
IR95-GW01-P-06A	/0910		6	6				6	2	1	2	1	–	–	–	
IR95-GW02-06A	/1400		10	10				10	2	1	2	1	2	1	1	
FB-100306	/1345		6	6				6	2	1	2	1	–	–	–	
ER-100306	/1520		6	6				6	2	1	2	1	–	–	–	
TB-100306	3-10-06/ –		–	2				2	2	–	–	–	–	–	–	
	/															
	/															
	/															
	/															
	/															

TSF#	RELINQUISHED BY	DATE/TIME	ACCEPTED BY	DATE/TIME	ADDITIONAL REMARKS:	COOLER TEMP:
	[signature]	3-10-06/1630		/	MS/MSD IR95-GW01-06A	
		/		/		
		/		/		

WHITE: LABORATORY COPY YELL REPORT COPY PINK: CLIENT'S COPY

CH2MHILL

GROUNDWATER SAMPLING DATA SHEET

Client: NAVFAC Atlantic
Location: Site 45 Lymon Camp Lejeune
Event: Site 45 SI Sampling
Date: 3/10/06
Weather: 60° F, breezy

Project Number: 328432.FI.FQ45
Well ID: ~~IR45-MW01~~ IR45-MW02
Sample ID: IR45-GW02-06A
Sampling Team: J. Vaughan / CLT
D. Seed / RDV

Total Depth: 21.5 ~~[illegible]~~ FT.(BTOC)
Depth to water: (-) 13.74 FT.(BTOC)
Water Column: 7.76 ~~[illegible]~~ FT.
(x) 0.163 GAL/FT.
Well Volume: 1.26 GAL. x3
Total Purge Vol.: 3.79 GAL.

Purge Device: Geopump 2 Peristalic

Measuring Device: Water Level Meter
Date and Time: 3/10/06 1215

Well Dia. (inches)	Volume (gallons/foot)
1	0.041
1.25	0.064
2	0.163
4	0.653

SAMPLE DATA

Date: 3/10/06 Time: 1400	Temp. °C	Cond. mS/cm	DO mg/L	pH SU	ORP mV	Turbidity NTU	Other: ____	Color / Odor / Comments
Method: Low Flow	16.00	0.100	4.46	4.40	345	0.68		

FIELD PARAMETERS

Time	Purge Vol. (gals)	Temp. °C	Cond. mS/cm	DO mg/L	pH SU	ORP mV	Turbidity NTU	Other: DTW	Color / Odor / Comments
1230	0.0	16.10	0.101	14.91	4.42	329	277	13.89	
1235	1.5	16.03	0.099	9.68	4.21	352	39	13.90	
1245	3.00	16.02	0.099	8.45	4.15	356	9.52	13.90	
1255	4.5	15.96	0.100	7.75	4.14	357	5.98	13.90	
1300	5.00	15.92	0.100	7.32	4.17	359	3.42	13.92	
1320	6.50	15.93	0.099	6.71	4.24	353	1.44	13.92	
1340	8.00	15.88	0.099	4.88	4.35	352	0.75	13.92	
1400	9.50	16.00	0.100	4.46	4.40	345	0.68	13.92	

Sample information: method, container number, size, and type, preservative used

Analysis	Preservative	Container requirements	No. of containers
OLC 3.2 VOA by GP	HCl	40mL VOA	2
Dissolved Gases	HCl	40 mL VOA	2
Total Organic Carbon	HCl	40 mL VOA	1
OLC 3.2 Pesticides & PCB	———	1L Amber	2
ILM 4.1 ICP Metals	HNO3	250 mL hdpe	1
SVOCS OLC 3.2	———	1L Amber	1
Ion Chromatography / pH	———	500 mL hdpe	1

Observations/Notes:

HACH Test kit
Ferrous Fe = 0.00 mg/L

MS/MSD
Duplicate ID No.:
Signature(s): [illegible]

CH2MHILL

GROUNDWATER SAMPLING DATA SHEET

Client: NAVFAC Atlantic
Location: Site 95 Lyman, Camp Lejeune
Event: Site 95 SI Sampling
Date: 3/9/06
Weather: 60°; breezy

Project Number: 328432.FI.FQ.95
Well ID: IR95-MW03
Sample ID: IR95-GW03-06A
Sampling Team: J. Vaughn / CLT
D. Seed / RDV

Total Depth: 18.5 FT.(BTOC)
Depth to water: (-) 12.11 FT.(BTOC)
Water Column: 6.33 FT.
(x) 0.163 GAL/FT.
Well Volume: 1.03 GAL.x3
Total Purge Vol.: 3.09 GAL.

Purge Device: Geopump 2 Peristalic

Measuring Device: Water Level Meter
Date and Time: 3/9/06 1645

Well Dia. (inches)	Volume (gallons/foot)
1	0.041
1.25	0.064
2	0.163
4	0.653

SAMPLE DATA

Date: 3/9/06 Time: 1730	Temp. °C	Cond. mS/cm	DO mg/L	pH SU	ORP mV	Turbidity NTU	Other: ____	Color / Odor / Comments
Method: Low Flow	14.95	0.106	10.17	5.00	300	5.70		

FIELD PARAMETERS

Time	Purge Vol. (gals)	Temp. °C	Cond. mS/cm	DO mg/L	pH SU	ORP mV	Turbidity NTU	Other: ____	Color / Odor / Comments
1630	0.3	15.82	0.156	>19.99	4.62	282	450		
1640	1.0	15.03	0.103	14.06	4.87	300	244		
1645	2.2	14.98	0.105	13.57	4.89	301	246		
1650	2.5	14.99	0.106	12.64	4.92	300	189		
1700	4.0	15.00	0.105	11.46	4.95	300	65.4		
1710	5.0	14.96	0.105	10.01	4.99	298	26.0		
1720	6.5	14.96	0.106	10.26	5.01	299	11.2		
1725	7.25	14.95	0.106	10.17	5.00	300	5.70		

Sample information: method, container number, size and type, preservative used.

Analysis	Preservative	Container requirements	No. of containers
VOA's by CLP OLC 3.2	HCl	40 mL VOA	2
Dissolved Gases	HCl	40 ml VOA	2
Total Organic Carbon	HCl	40 mL VOA	1
OLC 3.2 Pesticides + PCB	—	1L Amber	2
SVOCs OLC 3.2	—	1L Amber	1
ILM 4.1 ICP Metals	HNO_3	250 mL hdpe	1
Ion Chromotography / pH	—	500 mL hdpe	1

Observations/Notes:

HACH Test Kit
Ferrous Fe = 0.00 mg/L

MS/MSD
Duplicate ID No.:
Signature(s):

CH2MHILL

GROUNDWATER SAMPLING DATA SHEET

Client: NAVFAC Atlantic
Location: Site 95 Lyman, Camp Lejeune
Event: Site 95 SI sampling
Date: 3/10/06
Weather: 65°F, breezy

Project Number: 328432.FI.FQ.95
Well ID: IR95-MW01
Sample ID: IR95-GW01-06A
Sampling Team: J. Vaughan/CLT
D. Seed/RDU

Total Depth: 21.5 FT.(BTOC)
Depth to water: (-) 12.96 FT.(BTOC)
Water Column: 8.54 FT.
(x) 0.163 GAL/FT.
Well Volume: 1.39 GAL. x3
Total Purge Vol.: 4.18 GAL.

Purge Device: Geopump 2 Peristaltic

Measuring Device: Water Level Meter
Date and Time: 3/10/06 0756

Well Dia. (inches)	Volume (gallons/foot)
1	0.041
1.25	0.064
2	0.163
4	0.653

SAMPLE DATA

Date: 3/10/06 Time: 0910	Temp. °C	Cond. mS/cm	DO mg/L	pH SU	ORP mV	Turbidity NTU	Other: DTW	Color / Odor / Comments
Method: Low Flow	16.78	0.092	8.58	4.58	313	2.15	13.41	

FIELD PARAMETERS

Time	Purge Vol. (gals)	Temp. °C	Cond. mS/cm	DO mg/L	pH SU	ORP mV	Turbidity NTU	Other: DTW	Color / Odor / Comments
0805	0	16.22	0.092	16.24	4.61	297	>1000	13.51	
0815	2	16.49	0.091	11.84	4.63	312	7.5	13.35	
0825	3.5	16.55	0.091	10.31	4.63	315	13.2	~~13.5~~ 1335	
0835	4.5	16.60	0.091	9.67	4.62	312	10.48	13.36	
0845	5.5	16.74	0.092	9.04	4.59	318	6.52	13.39	
0855	6.5	16.85	0.092	8.56	4.60	313	4.21	13.40	
0905	7.5	16.78	0.092	8.58	4.58	313	2.15	13.41	

Sample information: method, container number, size, and type, preservative used

Analysis	Preservative	Container requirements	No. of containers
VOA by CLP OLC 3.2	HCl	40 mL VOA	2
Dissolved Gases	HCl	40 mL VOA	2
Total Organic Carbon	HCl	40 mL VOA	1
OLC 3.2 Pesticides + PCB	———	1 L Amber	2
SVOCs OLC 3.2	———	1 L Amber	1
ILM 4.1 ICP Metals	HNO_3	250 mL hdpe	1
Ion Chromatography / Ph	———	500 mL hdpe	1

Observations/Notes:
HACH Test Kit
Ferrous Fe = 0.00 mg/L

MS/MSD IR95-GW01-06A | Duplicate ID No.: IR95-GW-01-P-06A

Signature(s):

MITKEM CORPORATION
175 Metro Center Boulevard
Warwick, Rhode Island 02886-1755
(401) 732-3400 • Fax (401) 732-3499
email: mitkem@mitkem.com

CHAIN-OF-CUSTODY RECORD

REPORT TO		INVOICE TO		
COMPANY CH2M Hill	PHONE 704-329-0072	COMPANY	PHONE	LAB PROJECT #:
NAME 4824 Parkway Plaza Blvd. Ste. 200	FAX 704-329-0041	NAME	FAX	
ADDRESS Jeremy Vaughan		ADDRESS		TURNAROUND TIME: Normal
CITY/ST/ZIP Charlotte, NC 28217		CITY/ST/ZIP		

CLIENT PROJECT NAME:	CLIENT PROJECT #:	CLIENT P.O.#:
CTO-105 Site 95 SI	328434	

REQUESTED ANALYSES

SAMPLE IDENTIFICATION	DATE/TIME SAMPLED	COMPOSITE	GRAB	WATER	SOIL	OTHER	LAB ID	# OF CONTAINERS	VOCs by OLC 3.2	SVOCs by OLC 3.2	Pest/PCBs by OLC 3.2	TCLM 4.1 ICP Met.	Dissolved Gases	TOC	Ion Chrom/pH						COMMENTS
IR95-GW03-06A	3-9-06/1730		10	10				10	2	1	2	1	2	1	1						
IR95-GW01-06A	3-10-06/0910		22	22				22	6	3	6	3	2	1	1						
IR95-GW01-P-06A	/0910		6	6				6	2	1	2	1	–	–	–						
IR95-GW02-06A	/1400		10	10				10	2	1	2	1	2	1	1						
FB-100306	/1345		6	6				6	2	1	2	1	–	–	–						
ER-100306	/1520		6	6				6	2	1	2	1	–	–	–						
TB-100306	3-10-06/ –		–	2				2	2	–	–	–	–	–	–						
	/																				
	/																				
	/																				
	/																				
	/																				

TSF#	RELINQUISHED BY	DATE/TIME	ACCEPTED BY	DATE/TIME
	[signature]	3-10-06/1630		/
		/		/
		/		/

ADDITIONAL REMARKS: MS/MSD IR95-GW01-06A

COOLER TEMP:

WHITE: LABORATORY COPY YELLOW: REPORT COPY PINK: CLIENT'S COPY

Appendix F

Soil Assessment Chain of Custody Forms

F-1 Jaybird Road
F-2 Magnolia Road
F-3 Lyman Road

MITKEM CORPORATION
175 Metro Center Boulevard
Warwick, Rhode Island 02886-1755
(401) 732-3400 • Fax (401) 732-3499
email: mitkem@mitkem.com

CHAIN-OF-CUSTODY RECORD

REPORT TO		INVOICE TO		
COMPANY CH2M HILL	PHONE 757-671-8311 x451	COMPANY CH2M HILL	PHONE 704-329-0473 x247	LAB PROJECT #:
NAME FELICIA AREVALO	FAX	NAME RICK POWELL	FAX	
ADDRESS 5700 CLEVELAND ST STE 101		ADDRESS 4824 PARKWAY PLAZA BLVD STE 200		TURNAROUND TIME: STAT
CITY/ST/ZIP VA BEACH VA 23462		CITY/ST/ZIP CHARLOTTE NC 28217		

CLIENT PROJECT NAME:	CLIENT PROJECT #:	CLIENT P.O.#:
SITE 95 SOIL SAMPLING	328432.F1.FQ.95	

REQUESTED ANALYSES

SAMPLE IDENTIFICATION	DATE/TIME SAMPLED	COMPOSITE	GRAB	WATER	SOIL	OTHER	LAB ID	# OF CONTAINERS	SVOC	PCB/PCB TAL METALS												COMMENTS
IR95A-IS100-0-1-060	10-4-06 / 1020	✓			✓			1	1													
(D) ~~IR95A-IS100-3-4-060~~	10-4-06	✓			✓			1	1	(JF)												
IR95A-IS100D-0-1-060	10-4-06 / 1025	✓			✓			1	1													
IR95A-IS101-0-1-060	10-4-06 / 0950	✓			✓			1	1													
IR95A-IS101-3-4-060	10-4-06 / 1055	✓			✓			1	1													
IR95A-IS100D-3-4-060	10-4-06 / 1055	✓			✓			1	1													
IR95A-IS102-0-1-060	10-4-06 / 0940	✓			✓			1	1													
(D) ~~IR95A-IS102-2-4-060~~	10-4-06	✓			✓			1	1	(JF)												
IR95A-IS103-0-1-060	10-4-06 / 0930	✓			✓			1	1													
IR95A-IS103-3-4-060	10-4-06 / 1115	✓			✓			3	3													MS/MSD
IR95A-IS104-0-1-060	10-4-06 / 0925	✓			✓			1	1													
(D) ~~IR95A-IS104-3-4-060~~	10-4-06	✓			✓			1	1	(D)												

TSF#	RELINQUISHED BY	DATE/TIME	ACCEPTED BY	DATE/TIME	ADDITIONAL REMARKS:	COOLER TEMP:
	James E Franz	10-6-06 / 710	[illegible]	10-6-06 / 710		
	[illegible]	10-6-06 / 1130		/		
		/		/		

WHITE: LABORATORY COPY YELLOW: REPORT COPY PINK: CLIENT'S COPY

MITKEM CORPORATION
175 Metro Center Boulevard
Warwick, Rhode Island 02886-1755
(401) 732-3400 • Fax (401) 732-3499
email: mitkem@mitkem.com

CHAIN-OF-CUSTODY RECORD

REPORT TO		INVOICE TO		
COMPANY	PHONE	COMPANY	PHONE	LAB PROJECT #:
NAME	FAX	NAME	FAX	
ADDRESS SEE P1		ADDRESS		TURNAROUND TIME:
CITY/ST/ZIP		CITY/ST/ZIP		

CLIENT PROJECT NAME: SITE 96 SOIL SAMPLING
CLIENT PROJECT #: 328432.F1.FQ.95
CLIENT P.O.#:

REQUESTED ANALYSES: SVOC TEST/PCB TAL METALS

SAMPLE IDENTIFICATION	DATE/TIME SAMPLED	COMPOSITE	GRAB	WATER	SOIL	OTHER	LAB ID	# OF CONTAINERS	SVOC TEST/PCB TAL METALS	COMMENTS
IR95A-IS105-0-1-060	10-4-06 / 1120	✓			✓			1	1	
IR95A-IS106-0-1-060	10-4-06 / 1115	✓			✓			1	1	
IR95A-IS107-0-1-060	10-4-06 / 1100	✓			✓			1	1	
IR95A-IS108-0-1-060	10-4-06 / 1050	✓			✓			1	1	
IR95A-IS109-0-1-060	10-4-06 / 1045	✓			✓			1	1	
IR95A-IS110-0-1-060	10-4-06 / 1035	✓			✓			1	1	
IR95A-IS111-0-1-060	10-4-06 / 1020	✓			✓			1	1	
IR95A-IS112-0-1-060	10-4-06 / 1005	✓			✓			1	1	
IR95A-IS113-0-1-060	10-4-06 / 945	✓			✓			1	1	
IR95A-IS120-0-1-060	10-4-06 / 945	✓			✓			1	1	
IR95A-IS114-0-1-060	10-4-06 / 930	✓			✓			1	1	
IR95A-IS115-0-1-060	10-4-06 / 1255	✓			✓			1	1	

TSF#	RELINQUISHED BY	DATE/TIME	ACCEPTED BY	DATE/TIME
	James E Franz	10-6-06 / 7:10	[signature]	10-6-06 / 7:10
	[signature]	10-6-06 / 1130		/
		/		/

ADDITIONAL REMARKS:

COOLER TEMP:

WHITE: LABORATORY COPY YELLOW: REPORT COPY PINK: CLIENT'S COPY

MITKEM CORPORATION
175 Metro Center Boulevard
Warwick, Rhode Island 02886-1755
(401) 732-3400 • Fax (401) 732-3499
email: mitkem@mitkem.com

CHAIN-OF-CUSTODY RECORD

REPORT TO		INVOICE TO		
COMPANY	PHONE	COMPANY	PHONE	LAB PROJECT #:
NAME	FAX	NAME	FAX	
ADDRESS SEE p1		ADDRESS		TURNAROUND TIME:
CITY/ST/ZIP		CITY/ST/ZIP		

CLIENT PROJECT NAME:	CLIENT PROJECT #:	CLIENT P.O.#:
Site 95 Soil Sampling	328432.EI.FQ.95	

REQUESTED ANALYSES: SVOC, Pest/PCB, TAL Metals

SAMPLE IDENTIFICATION	DATE/TIME SAMPLED	COMPOSITE	GRAB	WATER	SOIL	OTHER	LAB ID	# OF CONTAINERS	SVOC	Pest/PCB	TAL Metals	COMMENTS
JR95A-IS115-3-4-0606 (JP)	10-4-06 / 1230	✓			✓			1	1			
JR95A-IS116-0-1-0606	10-4-06 / 1240	✓			✓			1	1			
~~JR95A-IS116-3-4-0606~~	~~10-4-06~~	✓			✓			1	1	JP		
JR95A-IS117-0-1-0606	10-4-06 / 1230	✓			✓			1	1			
JR95A-IS117-3-4-0606	10-4-06 / 1245	✓			✓			1	1			
JR95A-IS118-0-1-0606	10-4-06 / 1220	✓			✓			1	1			
~~JR95A-IS118-3-4-0606~~	~~10-4-06~~	✓			✓			1	1	JP		
JR95A-IS119-0-1-0606	10-4-06 / 1210	✓			✓			1	1			
JR95A-IS119-3-4-0606	10-4-06 / 1300	✓			✓			1	1			
JR95A-IS119D-3-4-0606	10-4-06 / 1300	✓			✓			1	1			
JR95A-IS120-0-1-0606	10-4-06 / 1340	✓			✓			1	1			
~~JR95A-IS120-3-4-0606~~	~~10-4-06~~	✓			✓			1	1	JP		

TSF#	RELINQUISHED BY	DATE/TIME	ACCEPTED BY	DATE/TIME
	James E Francis	10-6-06 / 7:10	[signature]	10-6-06 / 7:10
	[signature]	10-6-06 / 1130		/
		/		/

ADDITIONAL REMARKS:

COOLER TEMP:

WHITE: LABORATORY COPY YELLOW: REPORT COPY PINK: CLIENT'S COPY

MITKEM CORPORATION
175 Metro Center Boulevard
Warwick, Rhode Island 02886-1755
(401) 732-3400 • Fax (401) 732-3499
email: mitkem@mitkem.com

CHAIN-OF-CUSTODY RECORD

REPORT TO		INVOICE TO		
COMPANY	PHONE	COMPANY	PHONE	LAB PROJECT #:
NAME	FAX	NAME	FAX	
ADDRESS SEE P1		ADDRESS		TURNAROUND TIME:
CITY/ST/ZIP		CITY/ST/ZIP		

CLIENT PROJECT NAME:	CLIENT PROJECT #:	CLIENT P.O.#:
~~SITE~~ SITE 95 SOIL SAMPLING	328432.FI.FQ.95	

REQUESTED ANALYSES: SVOC, PEST/PCB, TAL METALS

SAMPLE IDENTIFICATION	DATE/TIME SAMPLED	COMPOSITE	GRAB	WATER	SOIL	OTHER	LAB ID	# OF CONTAINERS	SVOC	PEST/PCB	TAL METALS	COMMENTS
IR95A-IS121-0-1-0606	10-4-06 1115	✓			✓			3	3			MS/MSD
IR95A-IS121-3-4-0606	10-4-06 1150	✓			✓			1	1			
IR95A-IS122-0-1-0606	10-4-06 1130	✓			✓			1	1			
~~IR95A-IS122-3-4-0606~~	~~10-4-06 1240~~	✓			✓			1	1	JP		
IR95A-IS123-0-1-0606	10-4-06 1140	✓			✓			1	1			
IR95A-IS123-3-4-0606	10-4-06 1215	✓			✓			1	1			
	/											
	/											
	/											
	/											
	/											
	/											

TSF#	RELINQUISHED BY	DATE/TIME	ACCEPTED BY	DATE/TIME
	James E Franz	10-6-06 / 7:10	[illegible]	10-6-06 / 7:10
	[illegible]	10-6-06 / 1130		/
		/		/

ADDITIONAL REMARKS:

COOLER TEMP:

WHITE: LABORATORY COPY YELLOW: REPORT COPY PINK: CLIENT'S COPY

MITKEM CORPORATION
175 Metro Center Boulevard
Warwick, Rhode Island 02886-1755
(401) 732-3400 • Fax (401) 732-3499
email: mitkem@mitkem.com

CHAIN-OF-CUSTODY RECORD

REPORT TO		INVOICE TO		
COMPANY CH2M HILL	PHONE 757-671-6341 x451	COMPANY CH2M HILL	PHONE 704-329-0073 x217	LAB PROJECT #:
NAME FENCIA ARRUYO	FAX	NAME RICK POWELL	FAX	
ADDRESS 5700 CLEVELAND ST STE 101		ADDRESS 11824 PARKWAY PLAZA BLVD STE 200		TURNAROUND TIME:
CITY/ST/ZIP VA BEACH VA 23462		CITY/ST/ZIP CHARLOTTE NC 28217		

CLIENT PROJECT NAME:	CLIENT PROJECT #:	CLIENT P.O.#:
SITE 95 SOIL SAMPLING	328432.FI.FQ.95	

REQUESTED ANALYSES

SAMPLE IDENTIFICATION	DATE/TIME SAMPLED	COMPOSITE	GRAB	WATER	SOIL	OTHER	LAB ID	# OF CONTAINERS	SVOC	PEST/PCB	TAL METALS 6010	SVOC 1L AMB	PEST/PCB 1L AMB	TAL METALS TOTAL										COMMENTS
I2958-FB100506	10-5-06 / 1910		✓	✓				3	03	1	1	1												
I2958-IFB100506	/ 0930		✓	✓				3		1	1	1												
I2958-JG04-01-000	/ 0938	✓			✓			1	1															
I2958-IS105-01-000	/ 0940	✓			✓			1	1															
I2958-IS100-01-000	/ 0945	✓			✓			1	1															
I2958-IS106-01-000	/ 0950	✓			✓			1	1															
I2958-IS101-01-000	/ 0955	✓			✓			1	1															
I2958-IS107-01-000	/ 1000	✓			✓			1	1															
I2958-IS107D-01-000	/ 1000	✓			✓			1	1															
I2958-IS102-01-000	/ 1005	✓			✓			1	1															
I2958-IS103-01-000	/ 1015	✓			✓			1	1															
I2958-IS101-3-4-000	/ 1030	✓			✓			1	1															

TSF#	RELINQUISHED BY	DATE/TIME	ACCEPTED BY	DATE/TIME	ADDITIONAL REMARKS:	COOLER TEMP:
	James E Evans	10-6-06 / 7:10	[illegible]	10-6-06 / 7:10		
	[illegible]	10-6-06 / 1130		/		
		/		/		

WHITE: LABORATORY COPY YELLOW: REPORT COPY PINK: CLIENT'S COPY

MITKEM CORPORATION
175 Metro Center Boulevard
Warwick, Rhode Island 02886-1755
(401) 732-3400 • Fax (401) 732-3499
email: mitkem@mitkem.com

CHAIN-OF-CUSTODY RECORD

REPORT TO		INVOICE TO		
COMPANY	PHONE	COMPANY	PHONE	LAB PROJECT #:
NAME	FAX	NAME	FAX	
ADDRESS SEE P. 1		ADDRESS		TURNAROUND TIME:
CITY/ST/ZIP		CITY/ST/ZIP		

CLIENT PROJECT NAME:	CLIENT PROJECT #:	CLIENT P.O.#:
SITE 95 SOIL SAMPLING	328432.FI.FQ.95	

REQUESTED ANALYSES

SAMPLE IDENTIFICATION	DATE/TIME SAMPLED	COMPOSITE	GRAB	WATER	SOIL	OTHER	LAB ID	# OF CONTAINERS	SVOC Pest/PCB TAL METALS											COMMENTS
I295B-IS103-3-4-060	10-6-06 / 1040	✓			✓			1	1											
I295B-IS105-3-4-060	/ 1045	✓			✓			1	1											
I295B-IS107-3-4-060	/ 1100	✓			✓			1	1											
I295B-IS108-0-1-060	/ 1306	✓			✓			1	1											
I295B-IS130-0-1-060	/ 1320	✓			✓			1	1											
I295B-IS129-0-1-060	/ 1330	✓			✓			1	1											
I295B-IS109-0-1-060	/ 1334	✓			✓			1	1											
I295B-IS128-0-1-060	/ 1340	✓			✓			1	1											
I295B-IS110-0-1-060	/ 1345	✓			✓			1	1											
I295B-IS127-0-1-060	/ 1350	✓			✓			1	1											
I295B-IS111-0-1-060	/ 1354	✓			✓			1	1											
I295B-IS126-0-1-060	/ 1400	✓			✓			1	1											

TSF#	RELINQUISHED BY	DATE/TIME	ACCEPTED BY	DATE/TIME	ADDITIONAL REMARKS:	COOLER TEMP:
	James E Franz	10-6-06 / 7:10		10-6-06 / 7:10		
	[illegible]	10-6-06 / 1130		/		
		/		/		

WHITE: LABORATORY COPY YELLOW: REPORT COPY PINK: CLIENT'S COPY

MITKEM CORPORATION
175 Metro Center Boulevard
Warwick, Rhode Island 02886-1755
(401) 732-3400 • Fax (401) 732-3499
email: mitkem@mitkem.com

CHAIN-OF-CUSTODY RECORD

REPORT TO		INVOICE TO		
COMPANY	PHONE	COMPANY	PHONE	LAB PROJECT #:
NAME	FAX	NAME	FAX	
ADDRESS SEE P. 1		ADDRESS		TURNAROUND TIME:
CITY/ST/ZIP		CITY/ST/ZIP		

CLIENT PROJECT NAME:	CLIENT PROJECT #:	CLIENT P.O.#:
SITE 95 SOIL SAMPLING	320432. FI. FQ. 95	

REQUESTED ANALYSES: SVOC PEST/PCB TAL METALS

SAMPLE IDENTIFICATION	DATE/TIME SAMPLED	COMPOSITE	GRAB	WATER	SOIL	OTHER	LAB ID	# OF CONTAINERS	SVOC	PEST/PCB	TAL METALS	COMMENTS
I295B-IS112-0-1-060	10-5-06 / 1404	✓			✓			3	3			MS/MSD
I295B-IS125-0-1-060	/ 1410	✓			✓			1	1			
I295B-IS125D-0-1-060	/ 1410	✓			✓			1	1			
I295B-IS113-0-1-060	/ 1420	✓			✓			1	1			
I295B-IS124-0-1-060	/ 1420	✓			✓			1	1			
I295B-IS109-3-4-060	/ 1425	✓			✓			1	1			
I295B-IS109D-3-4-060	/ 1425	✓			✓			1	1			
I295B-IS123-0-1-060	/ 1430	✓			✓			1	1			
I295B-IS111-3-4-060	/ 1435	✓			✓			1	1			
I295B-IS122-0-1-060	/ 1440	✓			✓			1	1			
I295B-IS113-3-4-060	/ 1445	✓			✓			1	1			
I295B-IS114-0-1-060	/ 1447	✓			✓			3	3			MS/MSD

TSF#	RELINQUISHED BY	DATE/TIME	ACCEPTED BY	DATE/TIME
	James E Freund	10-6-06 / 7:10	[illegible]	10-6-06 / 7:10
	[illegible]	10-6-06 / 1130		/
		/		/

ADDITIONAL REMARKS:

COOLER TEMP:

WHITE: LABORATORY COPY YELLOW: REPORT COPY PINK: CLIENT'S COPY

MITKEM CORPORATION
175 Metro Center Boulevard
Warwick, Rhode Island 02886-1755
(401) 732-3400 • Fax (401) 732-3499
email: mitkem@mitkem.com

CHAIN-OF-CUSTODY RECORD

REPORT TO		INVOICE TO		
COMPANY	PHONE	COMPANY	PHONE	LAB PROJECT #:
NAME	FAX	NAME	FAX	
ADDRESS SEE P. 1		ADDRESS		TURNAROUND TIME:
CITY/ST/ZIP		CITY/ST/ZIP		

CLIENT PROJECT NAME:	CLIENT PROJECT #:	CLIENT P.O.#:
SOIL SAMPLING SITE 95	328432. FI.FR.95	

REQUESTED ANALYSES: SVOC, PEST/PCB, TAL METALS

SAMPLE IDENTIFICATION	DATE/TIME SAMPLED	COMPOSITE	GRAB	WATER	SOIL	OTHER	LAB ID	# OF CONTAINERS	SVOC, PEST/PCB, TAL METALS	COMMENTS
IR95B-IS121-0-1-060	10-5-06 / 1450	✓			✓			1	1	
IR95B-IS115-0-1-060	/ 1453	✓			✓			1	1	
IR95B-IS115-3-4-060	/ 1455	✓			✓			1	1	
IR95B-IS120-0-1-060	/ 1500	✓			✓			1	1	
IR95B-IS116-0-1-060	/ 1502	✓			✓			1	1	
IR95B-IS117-3-4-060	/ 1505	✓			✓			1	1	
IR95B-IS170-3-4-060	/ 1505	✓			✓			1	1	
IR95B-IS117-0-1-060	/ 1513	✓			✓			1	1	
IR95B-IS119-3-4-060	/ 1515	✓			✓			1	1	
IR95B-IS118-0-1-060	/ 1520	✓			✓			1	1	
IR95B-IS121-3-4-060	/ 1525	✓			✓			1	1	
IR95B-IS119-0-1-060	/ 1529	✓			✓			1	1	

TSF#	RELINQUISHED BY	DATE/TIME	ACCEPTED BY	DATE/TIME
	James E Frank	10-6-06 17:10	[signature]	10-6-06 17:10
	[signature]	10-6-06 / 1130		/
		/		/

ADDITIONAL REMARKS:

COOLER TEMP:

WHITE: LABORATORY COPY YELLOW: REPORT COPY PINK: CLIENT'S COPY

MITKEM CORPORATION
175 Metro Center Boulevard
Warwick, Rhode Island 02886-1755
(401) 732-3400 • Fax (401) 732-3499
email: mitkem@mitkem.com

CHAIN-OF-CUSTODY RECORD

REPORT TO		INVOICE TO		
COMPANY	PHONE	COMPANY	PHONE	LAB PROJECT #:
NAME	FAX	NAME	FAX	
ADDRESS SEE P. 1		ADDRESS		TURNAROUND TIME:
CITY/ST/ZIP		CITY/ST/ZIP		

CLIENT PROJECT NAME:	CLIENT PROJECT #:	CLIENT P.O.#:
SITE 95 SOIL SAMPLING	328432. FI.FQ.95	

REQUESTED ANALYSES

SAMPLE IDENTIFICATION	DATE/TIME SAMPLED	COMPOSITE	GRAB	WATER	SOIL	OTHER	LAB ID	# OF CONTAINERS	SVOC	PCB	TAL METALS	COMMENTS
IDA5B-IS123-3-4-060	10-5-06 / 1535	✓			✓			1	1			
IDA5B-IS125-3-4-060	/ 1545	✓			✓			1	1			
IDA5B-IS127-3-4-060	/ 1555	✓			✓			1	1			
IDA5B-IS129-3-4-060	/ 1555	✓			✓			2	2			MS/MSD
	/											
	/											
	/											
	/											
	/											
	/											
	/											
	/											

TSF#	RELINQUISHED BY	DATE/TIME	ACCEPTED BY	DATE/TIME	ADDITIONAL REMARKS:	COOLER TEMP:
	James E Frank	10-6-06 / 7:10	[illegible]	10-6-06 / 7:10		
	[illegible]	10-6-06 / 1130		/		
		/		/		

WHITE: LABORATORY COPY YELLOW: REPORT COPY PINK: CLIENT'S COPY

FedEx. US Airbill Express

FedEx Tracking Number 8513 0990 4513

Form ID No. 0215 — Sender's Copy

1 From *Please print and press hard.*

Date 10-4-06 — Sender's FedEx Account Number 1867-1820-8 ~~2331 7707 8~~

Sender's Name James Frank ~~ROSALIE FRAZER~~ — Phone (919) 875-4311

Company CH2M HILL

Address 3125 POPLARWOOD CT STE 304 — Dept./Floor/Suite/Room

City RALEIGH — State NC — ZIP 27604-6445

2 Your Internal Billing Reference First 24 characters will appear on invoice. 328432.FI.FQ.95 OPTIONAL EMP# AAA000 55293

3 To

Recipient's Name ED LAWLER — Phone (401) 732-3400

Company MITKEM CORP.

Recipient's Address 175 METRO CENTER BLVD — We cannot deliver to P.O. boxes or P.O. ZIP codes. — Dept./Floor/Suite/Room

Address — To request a package be held at a specific FedEx location, print FedEx address here.

City WARWICK — State RI — ZIP 02886

4a Express Package Service — *Packages up to 150 lbs.* * To most locations

- [x] FedEx Priority Overnight — Next business morning*
- [ ] FedEx Standard Overnight — Next business afternoon*
- [ ] FedEx First Overnight — Earliest next business morning delivery to select locations*
- [ ] FedEx 2Day — Second business day*
- [ ] FedEx Express Saver — Third business day*

FedEx Envelope rate not available. Minimum charge: One-pound rate

4b Express Freight Service — *Packages over 150 lbs.* ** To most locations

- [ ] FedEx 1Day Freight* — Next business day**
- [ ] FedEx 2Day Freight — Second business day**
- [ ] FedEx 3Day Freight — Third business day**

* Call for Confirmation:

5 Packaging — * Declared value limit $500

- [ ] FedEx Envelope*
- [ ] FedEx Pak* — Includes FedEx Small Pak, FedEx Large Pak, and FedEx Sturdy Pak
- [ ] FedEx Box
- [ ] FedEx Tube
- [x] Other

6 Special Handling — Include FedEx address in Section 3.

- [ ] SATURDAY Delivery — Available ONLY for FedEx Priority Overnight, FedEx 2Day, FedEx 1Day Freight, and FedEx 2Day Freight to select ZIP codes
- [ ] HOLD Weekday at FedEx Location — NOT Available for FedEx First Overnight
- [ ] HOLD Saturday at FedEx Location — Available ONLY for FedEx Priority Overnight and FedEx 2Day to select locations

Does this shipment contain dangerous goods? One box must be checked.

- [x] No
- [ ] Yes — As per attached Shipper's Declaration
- [ ] Yes — Shipper's Declaration not required
- [ ] Dry Ice — Dry Ice, 9, UN 1845 ____ x ____ kg
- [ ] Cargo Aircraft Only

Dangerous goods (including Dry Ice) cannot be shipped in FedEx packaging.

7 Payment *Bill to:* Enter FedEx Acct. No. or Credit Card No. below.

- [x] Sender — Acct. No. in Section 1 will be billed.
- [ ] Recipient
- [ ] Third Party
- [ ] Credit Card
- [ ] Cash/Check

FedEx Acct. No. / Credit Card No. — Exp. Date

Total Packages	Total Weight	Total Declared Value†
1	32	$ .00

†Our liability is limited to $100 unless you declare a higher value. See back for details. — FedEx Use Only

8 Sign to Authorize Delivery Without a Signature

By signing you authorize us to deliver this shipment without obtaining a signature and agree to indemnify and hold us harmless from any resulting claims.

466

Try online shipping at fedex.com

By using this Airbill you agree to the service conditions on the back of this Airbill and in our current Service Guide, including terms that limit our liability.

Questions? Visit our Web site at fedex.com or call 1.800.GoFedEx 1.800.463.3339.

0308910775

SRF • Rev. Date 11/03 • Part #158279 • ©1994-2003 FedEx • PRINTED IN U.S.A.

MVR11

FedEx. US Airbill Express

FedEx Tracking Number 8513 0990 4502

Form ID No. 0215 — Sender's Copy

1 From *Please print and press hard.*

Date 10-4-06 — Sender's FedEx Account Number 1867-1820-8 ~~2331 7707 8~~

Sender's Name James Frank ~~ROSALIE FRAZER~~ — Phone (919) 875-4311

Company CH2M HILL

Address 3125 POPLARWOOD CT STE 304 — Dept./Floor/Suite/Room

City RALEIGH — State NC — ZIP 27604-6445

2 Your Internal Billing Reference First 24 characters will appear on invoice. 328432.FI.FQ.95 OPTIONAL AAA000 55293

3 To

Recipient's Name Ed Lawler — Phone (401) 732-3400

Company MitKem Corp

Recipient's Address 175 Metro Center Blvd — We cannot deliver to P.O. boxes or P.O. ZIP codes. — Dept./Floor/Suite/Room

Address — To request a package be held at a specific FedEx location, print FedEx address here.

City Warwick — State RI — ZIP 02886

4a Express Package Service — *Packages up to 150 lbs.* * To most locations

- [x] FedEx Priority Overnight — Next business morning*
- [ ] FedEx Standard Overnight — Next business afternoon*
- [ ] FedEx First Overnight — Earliest next business morning delivery to select locations*
- [ ] FedEx 2Day — Second business day*
- [ ] FedEx Express Saver — Third business day*

FedEx Envelope rate not available. Minimum charge: One-pound rate

4b Express Freight Service — *Packages over 150 lbs.* ** To most locations

- [ ] FedEx 1Day Freight* — Next business day**
- [ ] FedEx 2Day Freight — Second business day**
- [ ] FedEx 3Day Freight — Third business day**

* Call for Confirmation:

5 Packaging — * Declared value limit $500

- [ ] FedEx Envelope*
- [ ] FedEx Pak* — Includes FedEx Small Pak, FedEx Large Pak, and FedEx Sturdy Pak
- [ ] FedEx Box
- [ ] FedEx Tube
- [x] Other

6 Special Handling — Include FedEx address in Section 3.

- [ ] SATURDAY Delivery — Available ONLY for FedEx Priority Overnight, FedEx 2Day, FedEx 1Day Freight, and FedEx 2Day Freight to select ZIP codes
- [ ] HOLD Weekday at FedEx Location — NOT Available for FedEx First Overnight
- [ ] HOLD Saturday at FedEx Location — Available ONLY for FedEx Priority Overnight and FedEx 2Day to select locations

Does this shipment contain dangerous goods? One box must be checked.

- [x] No
- [ ] Yes — As per attached Shipper's Declaration
- [ ] Yes — Shipper's Declaration not required
- [ ] Dry Ice — Dry Ice, 9, UN 1845 ____ x ____ kg
- [ ] Cargo Aircraft Only

Dangerous goods (including Dry Ice) cannot be shipped in FedEx packaging.

7 Payment *Bill to:* Enter FedEx Acct. No. or Credit Card No. below.

- [x] Sender — Acct. No. in Section 1 will be billed.
- [ ] Recipient
- [ ] Third Party
- [ ] Credit Card
- [ ] Cash/Check

FedEx Acct. No. / Credit Card No. — Exp. Date

Total Packages	Total Weight	Total Declared Value†
1	53	$ .00

†Our liability is limited to $100 unless you declare a higher value. See back for details. — FedEx Use Only

8 Sign to Authorize Delivery Without a Signature

By signing you authorize us to deliver this shipment without obtaining a signature and agree to indemnify and hold us harmless from any resulting claims.

466

Try online shipping at fedex.com

By using this Airbill you agree to the service conditions on the back of this Airbill and in our current Service Guide, including terms that limit our liability.

Questions? Visit our Web site at fedex.com or call 1.800.GoFedEx 1.800.463.3339.

0308910775

SRF • Rev. Date 11/03 • Part #158279 • ©1994-2003 FedEx • PRINTED IN U.S.A.

FedEx. US Airbill Express

FedEx Tracking Number 8513 0990 4524

Form ID No. 0215 — Sender's Copy

1 From Please print and press hard.

Date 10/4/06 — Sender's FedEx Account Number 1867-1820-8 ~~2331 7907 8~~

Sender's Name James Frank ~~ROSALIE FRAZER~~ — Phone (919) 875-4311 ~~(919) 875-4311~~

Company CH2M HILL

Address 3125 POPLARWOOD CT STE 304 — Dept./Floor/Suite/Room

City RALEIGH — State NC — ZIP 27604-6445

2 Your Internal Billing Reference First 24 characters will appear on invoice. 328432.FI.FQ.95 OPTIONAL AAA000 55293

3 To

Recipient's Name Ed Lawler — Phone (401) 732-3400

Company Mitkem Corp

Recipient's Address 175 Metro Center Blvd — Dept./Floor/Suite/Room

We cannot deliver to P.O. boxes or P.O. ZIP codes.

Address

To request a package be held at a specific FedEx location, print FedEx address here.

City Warwick — State NC — ZIP 02886

4a Express Package Service — Packages up to 150 lbs.

- [x] FedEx Priority Overnight — Next business morning*
- [ ] FedEx Standard Overnight — Next business afternoon*
- [ ] FedEx First Overnight — Earliest next business morning delivery to select locations*
- [ ] FedEx 2Day — Second business day*
- [ ] FedEx Express Saver — Third business day*

FedEx Envelope rate not available. Minimum charge: One-pound rate

4b Express Freight Service — Packages over 150 lbs.

- [ ] FedEx 1Day Freight* — Next business day**
- [ ] FedEx 2Day Freight — Second business day**
- [ ] FedEx 3Day Freight — Third business day**

* Call for Confirmation:

5 Packaging — * Declared value limit $500

- [ ] FedEx Envelope*
- [ ] FedEx Pak* — Includes FedEx Small Pak, FedEx Large Pak, and FedEx Sturdy Pak
- [ ] FedEx Box
- [ ] FedEx Tube
- [ ] Other

6 Special Handling — Include FedEx address in Section 3.

- [ ] SATURDAY Delivery — Available ONLY for FedEx Priority Overnight, FedEx 2Day, FedEx 1Day Freight, and FedEx 2Day Freight to select ZIP codes
- [ ] HOLD Weekday at FedEx Location — NOT Available for FedEx First Overnight
- [ ] HOLD Saturday at FedEx Location — Available ONLY for FedEx Priority Overnight and FedEx 2Day to select locations

Does this shipment contain dangerous goods? One box must be checked.

- [x] No
- [ ] Yes — As per attached Shipper's Declaration
- [ ] Yes — Shipper's Declaration not required
- [ ] Dry Ice — Dry Ice, 9, UN 1845 ____ x ____ kg

Dangerous goods (including Dry Ice) cannot be shipped in FedEx packaging.

- [ ] Cargo Aircraft Only

7 Payment Bill to: Enter FedEx Acct. No. or Credit Card No. below.

- [x] Sender — Acct. No. in Section 1 will be billed.
- [ ] Recipient
- [ ] Third Party
- [ ] Credit Card
- [ ] Cash/Check

FedEx Acct. No. / Credit Card No. — Exp. Date

Total Packages	Total Weight	Total Declared Value†
1	48	$ .00

†Our liability is limited to $100 unless you declare a higher value. See back for details.

FedEx Use Only

8 Sign to Authorize Delivery Without a Signature

By signing you authorize us to deliver this shipment without obtaining a signature and agree to indemnify and hold us harmless from any resulting claims.

466

SRF • Rev. Date 11/03 • Part #156279 • ©1994-2003 FedEx • PRINTED IN U.S.A.

Try online shipping at fedex.com

By using this Airbill you agree to the service conditions on the back of this Airbill and in our current Service Guide, including terms that limit our liability.

Questions? Visit our Web site at fedex.com or call 1.800.GoFedEx 1.800.463.3339.

0308910775

MUR11

FedEx. US Airbill Express

FedEx Tracking Number 8513 0990 4498

Form ID No. 0215 — Sender's Copy

1 From Please print and press hard.

Date 10-4-06 — Sender's FedEx Account Number 1867-1820-8 ~~2331 7907 8~~

Sender's Name JAMES FRANK ~~ROSALIE FRAZER~~ X15 — Phone (919) 875-4311

Company CH2M HILL

Address 3125 POPLARWOOD CT STE 304 — Dept./Floor/Suite/Room

City RALEIGH — State NC — ZIP 27604-6445

2 Your Internal Billing Reference First 24 characters will appear on invoice. 328432.FI.FQ.95 OPTIONAL EMP# AAA000 55293

3 To

Recipient's Name ED LAWLER — Phone (401) 732-3400

Company MITKEM CORP.

Recipient's Address 175 METRO CENTER BLVD — Dept./Floor/Suite/Room

We cannot deliver to P.O. boxes or P.O. ZIP codes.

Address

To request a package be held at a specific FedEx location, print FedEx address here.

City WARWICK — State RI — ZIP 02886

4a Express Package Service — Packages up to 150 lbs.

- [x] FedEx Priority Overnight — Next business morning*
- [ ] FedEx Standard Overnight — Next business afternoon*
- [ ] FedEx First Overnight — Earliest next business morning delivery to select locations*
- [ ] FedEx 2Day — Second business day*
- [ ] FedEx Express Saver — Third business day*

FedEx Envelope rate not available. Minimum charge: One-pound rate

4b Express Freight Service — Packages over 150 lbs.

- [ ] FedEx 1Day Freight* — Next business day**
- [ ] FedEx 2Day Freight — Second business day**
- [ ] FedEx 3Day Freight — Third business day**

* Call for Confirmation:

5 Packaging — * Declared value limit $500

- [ ] FedEx Envelope*
- [ ] FedEx Pak* — Includes FedEx Small Pak, FedEx Large Pak, and FedEx Sturdy Pak
- [ ] FedEx Box
- [ ] FedEx Tube
- [x] Other

6 Special Handling — Include FedEx address in Section 3.

- [ ] SATURDAY Delivery — Available ONLY for FedEx Priority Overnight, FedEx 2Day, FedEx 1Day Freight, and FedEx 2Day Freight to select ZIP codes
- [ ] HOLD Weekday at FedEx Location — NOT Available for FedEx First Overnight
- [ ] HOLD Saturday at FedEx Location — Available ONLY for FedEx Priority Overnight and FedEx 2Day to select locations

Does this shipment contain dangerous goods? One box must be checked.

- [x] No
- [ ] Yes — As per attached Shipper's Declaration
- [ ] Yes — Shipper's Declaration not required
- [ ] Dry Ice — Dry Ice, 9, UN 1845 ____ x ____ kg

Dangerous goods (including Dry Ice) cannot be shipped in FedEx packaging.

- [ ] Cargo Aircraft Only

7 Payment Bill to: Enter FedEx Acct. No. or Credit Card No. below.

- [x] Sender — Acct. No. in Section 1 will be billed.
- [ ] Recipient
- [ ] Third Party
- [ ] Credit Card
- [ ] Cash/Check

FedEx Acct. No. / Credit Card No. — Exp. Date

Total Packages	Total Weight	Total Declared Value†
1	51	$ .00

†Our liability is limited to $100 unless you declare a higher value. See back for details.

FedEx Use Only

8 Sign to Authorize Delivery Without a Signature

By signing you authorize us to deliver this shipment without obtaining a signature and agree to indemnify and hold us harmless from any resulting claims.

466

SRF • Rev. Date 11/03 • Part #156279 • ©1994-2003 FedEx • PRINTED IN U.S.A.

Try online shipping at fedex.com

By using this Airbill you agree to the service conditions on the back of this Airbill and in our current Service Guide, including terms that limit our liability.

Questions? Visit our Web site at fedex.com or call 1.800.GoFedEx 1.800.463.3339.

0308910775

MITKEM CORPORATION
175 Metro Center Boulevard
Warwick, Rhode Island 02886-1755
(401) 732-3400 • Fax (401) 732-3499
email: mitkem@mitkem.com

CHAIN-OF-CUSTODY RECORD

REPORT TO		INVOICE TO		
COMPANY CH2MHILL	PHONE 757 671-8311 x451	COMPANY CH2MHILL	PHONE 704 329-0073 x317	LAB PROJECT #:
NAME Fenga Arroyo	FAX	NAME Rick Powell	FAX	
ADDRESS 5700 Cleveland Street Ste 101		ADDRESS 4824 Parkway Plaza Blvd Ste 200		TURNAROUND TIME: STAT
CITY/ST/ZIP VA Beach VA 23462		CITY/ST/ZIP Charlotte NC 28217		

CLIENT PROJECT NAME:	CLIENT PROJECT #:	CLIENT P.O.#:
Site 95 Soil Sampling	328432. FI.FQ.95	

REQUESTED ANALYSES

SAMPLE IDENTIFICATION	DATE/TIME SAMPLED	COMPOSITE	GRAB	WATER	SOIL	OTHER	LAB ID	# OF CONTAINERS	SVOC TEST PLUS TAL METALS	COMMENTS
IR95C-IS101-0-1-0606	10-2-06 / 1447	✓			✓			1	1	
IR95C-IS1010-0-1-0606	10-2-06 / 1447	✓			✓			1	1	
IR95C-IS114-0-1-0606	10-2-06 / 1455	✓			✓			1	1	
IR95C-IS126-0-1-0606	10-2-06 / 1500	✓			✓			1	1	
IR95C-IS104-0-1-0606	10-2-06 / 1503	✓			✓			1	1	
IR95C-IS103-0-1-0606	10-2-06 / 1510	✓			✓			1	1	
IR95C-IS125-0-1-0606	10-2-06 / 1515	✓			✓			1	1	
IR95C-IS1260-0-1-0606	10-2-06 / 1500	✓			✓			1	1	
IR95C-IS115-0-1-0606	10-2-06 / 1515	✓			✓			3	3	
IR95C-IS127-0-1-0606	10-2-06 / 1525	✓			✓			1	1	
IR95C-IS110-0-1-0606	10-2-06 / 1530	✓			✓			1	1	
IR95C-IS116-0-1-0606	10-2-06 / 1530	✓			✓			1	1	

TSF#	RELINQUISHED BY	DATE/TIME	ACCEPTED BY	DATE/TIME
	James E Franz	10-4-06 / 1500		/
		/		/
		/		/

ADDITIONAL REMARKS:

COOLER TEMP:

WHITE: LABORATORY COPY YELLOW: REPORT COPY PINK: CLIENT'S COPY

MITKEM CORPORATION
175 Metro Center Boulevard
Warwick, Rhode Island 02886-1755
(401) 732-3400 • Fax (401) 732-3499
email: mitkem@mitkem.com

CHAIN-OF-CUSTODY RECORD

REPORT TO		INVOICE TO		
COMPANY	PHONE	COMPANY	PHONE	LAB PROJECT #:
NAME	FAX	NAME	FAX	
ADDRESS SEE P. 1		ADDRESS		TURNAROUND TIME:
CITY/ST/ZIP		CITY/ST/ZIP		

CLIENT PROJECT NAME:	CLIENT PROJECT #:	CLIENT P.O.#:
SITE 95 SOIL SAMPLING	328432.FI.FQ.95	

REQUESTED ANALYSES

SAMPLE IDENTIFICATION	DATE/TIME SAMPLED	COMPOSITE	GRAB	WATER	SOIL	OTHER	LAB ID	# OF CONTAINERS	SVOC	PESTICIDES TAL METALS												COMMENTS
IR95C-IS121-0-1-060	10-2-06 / 1535	✓			✓			1	1													
IR95C-IS104-0-1-060	10-2-06 / 1545	✓			✓			1	1													
IR95C-IS123-0-1-060	10-2-06 / 1545	✓			✓			1	1													
IR95C-IS105-0-1-060	10-2-06 / 1549	✓			✓			1	1													
IR95C-IS113-0-1-060	10-2-06 / 1550	✓			✓			1	1													
IR95C-IS117-0-1-060	10-2-06 / 1555	✓			✓			1	1													
IR95C-IS106-0-1-060	10-2-06 / 1600	✓			✓			1	1													
IR95C-IS112-0-1-060	10-2-06 / 1600	✓			✓			1	1													
IR95C-IS120-0-1-060	10-2-06 / 1600	✓			✓			1	1													
IR95C-IS118-0-1-060	10-2-06 / 1605	✓			✓			1	1													
IR95C-IS107-0-1-060	10-2-06 / 1610	✓			✓			1	1													
IR95C-IS119-0-1-060	10-2-06 / 1610	✓			✓			1	1													

TSF#	RELINQUISHED BY	DATE/TIME	ACCEPTED BY	DATE/TIME	ADDITIONAL REMARKS:	COOLER TEMP:
	James E Frank	10-4-06 / 1500		/		
		/		/		
		/		/		

WHITE: LABORATORY COPY YELLOW: REPORT COPY PINK: CLIENT'S COPY

MITKEM CORPORATION
175 Metro Center Boulevard
Warwick, Rhode Island 02886-1755
(401) 732-3400 • Fax (401) 732-3499
email: mitkem@mitkem.com

CHAIN-OF-CUSTODY RECORD

REPORT TO		INVOICE TO		
COMPANY	PHONE	COMPANY	PHONE	LAB PROJECT #:
NAME	FAX	NAME	FAX	
ADDRESS SEE P. 1		ADDRESS		TURNAROUND TIME:
CITY/ST/ZIP		CITY/ST/ZIP		

CLIENT PROJECT NAME: SITE 95 SOIL SAMPLING
CLIENT PROJECT #: 328432.F1.F0 95
CLIENT P.O.#:

REQUESTED ANALYSES

SAMPLE IDENTIFICATION	DATE/TIME SAMPLED	COMPOSITE	GRAB	WATER	SOIL	OTHER	LAB ID	# OF CONTAINERS	SVOC PEST/PCB TAL METALS	COMMENTS
IR95C-IS111-0-1-06D	10-2-06 / 1615	✓			✓			1	1	
IR95C-IS108-0-1-06D	10-2-06 / 1620	✓			✓			1	1	
IR95C-IS120-0-1-06D	10-2-06 / 1620	✓			✓			1	1	
IR95C-IS119-0-1-06D	10-2-06 / 1630	✓			✓			1	1	
IR95C-IS121-0-1-06D	10-2-06 / 1630	✓			✓			1	1	
IR95C-IS102-0-1-06D	10-2-06 / 1630	✓			✓			1	1	
IR95C-IS122-0-1-06D	10-2-06 / 1640	✓			✓			3	3	MS/MSD
IR95C-IS117-3-4-06D	10-3-06 / 1650	✓			✓			1	1	
IR95C-IS119-3-4-06D	10-31-06 / 1715	✓			✓			1	1	
IR95C-IS121-3-4-06D	10-31-06 / 1725	✓			✓			1	1	
IR95C-IS123-3-4-06D	10-31-06 / 1745	✓			✓			1	1	
IR95C-IS123D-3-4-06D	10-31-06 / 1745	✓			✓			1	1	

TSF#	RELINQUISHED BY	DATE/TIME	ACCEPTED BY	DATE/TIME
	James E Frank	10-11-06 1500		/
		/		/
		/		/

ADDITIONAL REMARKS:

COOLER TEMP:

WHITE: LABORATORY COPY YELLOW: REPORT COPY PINK: CLIENT'S COPY

MITKEM CORPORATION
175 Metro Center Boulevard
Warwick, Rhode Island 02886-1755
(401) 732-3400 • Fax (401) 732-3499
email: mitkem@mitkem.com

CHAIN-OF-CUSTODY RECORD

REPORT TO		INVOICE TO		
COMPANY	PHONE	COMPANY	PHONE	LAB PROJECT #:
NAME	FAX	NAME	FAX	
ADDRESS SEE P1		ADDRESS		TURNAROUND TIME:
CITY/ST/ZIP		CITY/ST/ZIP		

CLIENT PROJECT NAME:	CLIENT PROJECT #:	CLIENT P.O.#:
SITE 95 SOIL SAMPLING	328432.FI. FQ.95	

REQUESTED ANALYSES: SVOC, PEST/PCB, TAL METALS

SAMPLE IDENTIFICATION	DATE/TIME SAMPLED	COMPOSITE	GRAB	WATER	SOIL	OTHER	LAB ID	# OF CONTAINERS	SVOC, PEST/PCB, TAL METALS	COMMENTS
IR95c-IS125-3-4-060	10-3-06 1800	✓			✓			1	1	
IR95c-IS127-3-4-060	10-3-06 1815	✓			✓			1	1	
IR95c-IS115-3-4-060	10-3-06 1655	✓			✓			3	3	MS/MSD
IR95c-IS111-3-4-060	10-3-06 1725	✓			✓			1	1	
IR95c-IS113-3-4-060	10-3-06 1755	✓			✓			1	1	
IR95c-IS113D-3-4-060	10-3-06 1755	✓			✓			1	1	
IR95c-IS101-3-4-060	10-3-06 1655	✓			✓			1	1	
IR95c-IS103-3-4-060	10-3-06 1725	✓			✓			3	3	MS/MSD
IR95c-IS105-3-4-060	10-3-06 1845	✓			✓			1	1	
IR95c-IS107-3-4-060	10-3-06 1840	✓			✓			1	1	
IR95c-IS109-3-4-060	10-3-06 1900	✓			✓			1	1	
	/									

TSF#	RELINQUISHED BY	DATE/TIME	ACCEPTED BY	DATE/TIME	ADDITIONAL REMARKS:	COOLER TEMP:
		10-4-06 / 1550		/		
		/		/		
		/		/		

WHITE: LABORATORY COPY YELLOW: REPORT COPY PINK: CLIENT'S COPY

MITKEM CORPORATION
175 Metro Center Boulevard
Warwick, Rhode Island 02886-1755
(401) 732-3400 • Fax (401) 732-3499
email: mitkem@mitkem.com

CHAIN-OF-CUSTODY RECORD

REPORT TO		INVOICE TO		
COMPANY	PHONE	COMPANY	PHONE	LAB PROJECT #:
NAME SEE P1	FAX	NAME	FAX	
ADDRESS		ADDRESS		TURNAROUND TIME:
CITY/ST/ZIP		CITY/ST/ZIP		

CLIENT PROJECT NAME:	CLIENT PROJECT #:	CLIENT P.O.#:
SITE 95 SOIL SAMPLING	328452, FI. FQ 95	

REQUESTED ANALYSES

SAMPLE IDENTIFICATION	DATE/TIME SAMPLED	COMPOSITE	GRAB	WATER	SOIL	OTHER	LAB ID	# OF CONTAINERS	SVOC	PEST/PCB	TAL METALS	SVOC 1L AMB	PEST/PCB 1L AMB	TAL METALS POLY									COMMENTS
IR95A-FB1AA406	10-4-06 / 1945		✓	✓				3		1	1	1											
IR95A-FB1BA406	10-4-06 / 1934		✓	✓				3		1	1	1											
	/																						
	/																						
	/																						
	/																						
	/																						
	/																						
	/																						
	/																						
	/																						
	/																						
	/																						

TSF#	RELINQUISHED BY	DATE/TIME	ACCEPTED BY	DATE/TIME	ADDITIONAL REMARKS:	COOLER TEMP:
	Lynne E Frank	10-4-06 / 1500		/		
		/		/		
		/		/		

WHITE: LABORATORY COPY YELLOW: REPORT COPY PINK: CLIENT'S COPY

Appendix G

Geotechnical Analysis Results

G-1 Jaybird Road
G-2 Magnolia Road
G-3 Lyman Road

PERMEABILITY TEST

ASTM D 5084-90(Reapproved 1997)
(SOP-S22A & S22B)

geotechnics
INTEGRITY IN TESTING

Client	CH2M HILL	Boring No.	MW-05
Client Project	MCP CAMP LEJEUNE O. UNIT No. 2	Depth (ft.)	6.5-7.0'
Project No.	2006-521-01	Sample No.	NA
Lab ID No.	2006-521-01-01		

AVERAGE PERMEABILITY = 1.1E-05 cm/sec @ 20°C
AVERAGE PERMEABILITY = 1.1E-07 m/sec @ 20°C

TOTAL FLOW vs. ELAPSED TIME

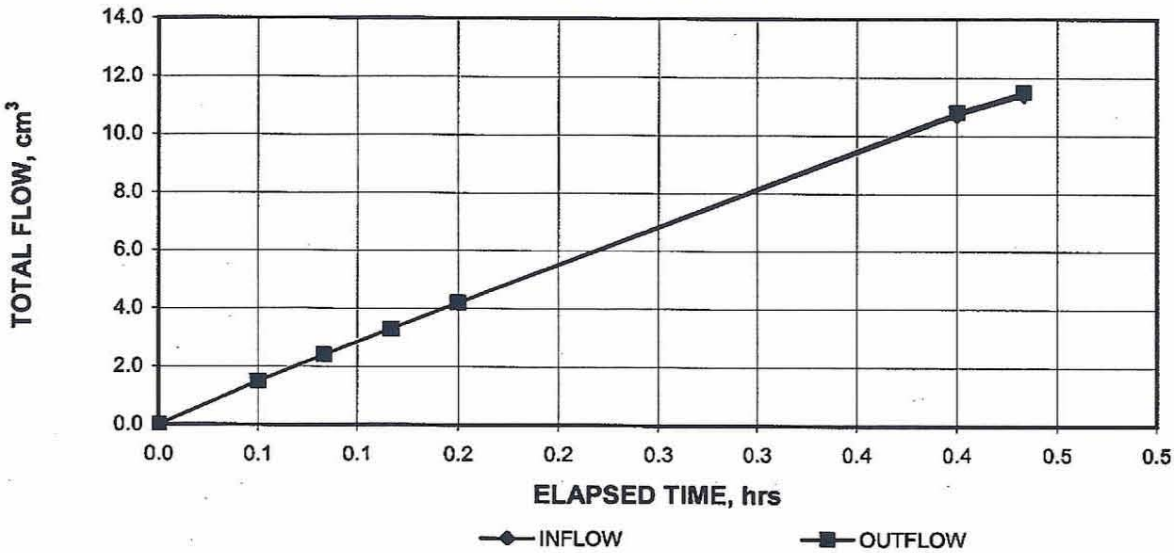

PORE VOLUMES EXCHANGED vs. PERMEABILITY

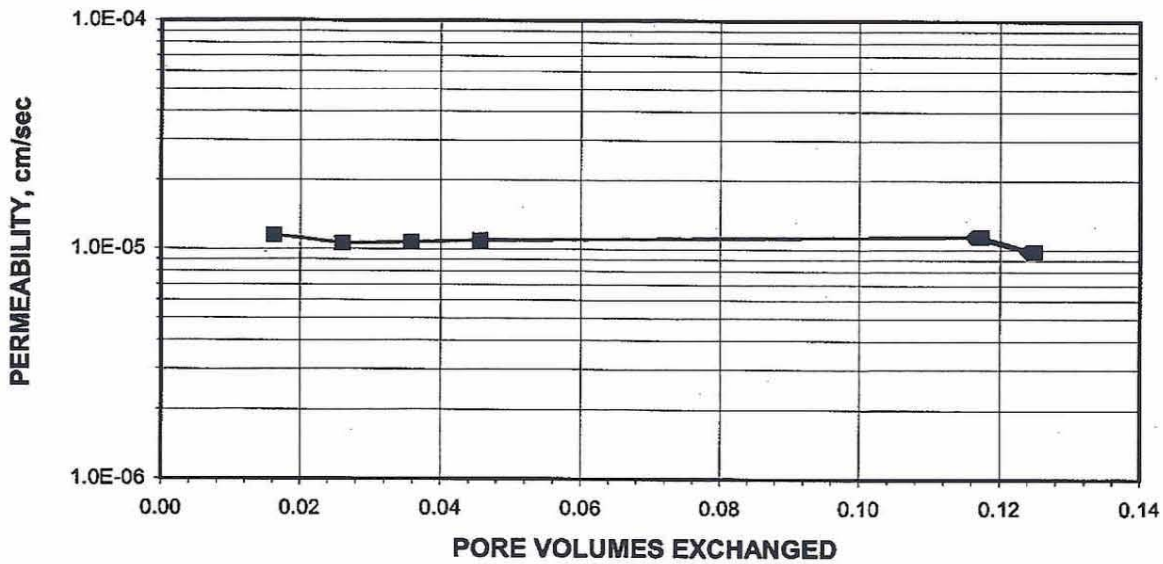

Tested By: MCW Date: 02/27/06 Checked By: AHF Date: 3-2-06

DCN: CT-22 DATE: 01-08-99 REVISION:2C:\2006 PROJECTS\2006-521 CH2M HILL\[2006-521-01-01 PERM.xls]Sheet1

2200 Westinghouse Boulevard • Suite 105 • Raleigh, NC 27604 • Phone (919) 876-0405 • Fax (919) 876-0460

PERMEABILITY TEST

ASTM D 5084-90(Reapproved 1997)
(SOP-S22A & S22B)

geotechnics
INTEGRITY IN TESTING

Client	CH2M HILL	Boring No.	MW-05
Client Project	MCP CAMP LEJEUNE O. UNIT No. 22 SITE 95	Depth (ft.)	6.5-7.0'
Project No.	2006-521-01	Sample No.	NA
Lab ID No.	2006-521-01-01		
		Specific Gravity	2.59 Measured
		Sample Condition	Undisturbed

Visual Description: LIGHT GRAY SILTY SAND

MOISTURE CONTENT:	BEFORE TEST	AFTER TEST
Tare Number	307	302
Wt. of Tare & WS (gm.)	223.43	774.51
Wt. of Tare & DS (gm.)	205.91	681.75
Wt. of Tare (gm.)	109.98	111.26
Wt. of Water (gm.)	17.52	92.76
Wt. of DS (gm.)	95.93	570.49
Moisture Content (%)	**18.3**	**16.3**

SPECIMEN:	BEFORE TEST	AFTER TEST
Wt. of Tube & WS (gm.)	669.00	NA
Wt. of Tube (gm.)	0.00	NA
Wt. of WS (gm.)	669.00	657.67
Length 1 (in.)	2.882	2.947
Length 2 (in.)	2.939	2.949
Length 3 (in.)	2.984	2.945
Top Diameter (in.)	2.879	2.885
Middle Diameter (in.)	2.871	2.885
Bottom Diameter (in.)	2.884	2.813
Average Length (in.)	2.94	2.95
Average Area (in.^{2})	6.51	6.43
Sample Volume (cm^3)	312.88	310.46
Unit Wet Wt. (gm./ cm^3)	2.14	2.12
Unit Wet Wt. (pcf)	133.5	132.2
Unit Dry Wt. (pcf)	112.9	113.7
Unit Dry Wt. (gm./ cm^3)	1.81	1.82
Void Ratio, e	0.43	0.42
Porosity, n	0.30	0.30
Pore Volume (cm^3)	94.5	92.0

Tested By: MCW Date: 2/27/2006 Checked By: AHF Date: 3-2-06

DCN: CT-22 DATE: 01-08-99 REVISION:2 \\Lab1\c\2006 PROJECTS\2006-521 CH2M HILL\[2006-521-01-01 PERM.xls]Sheet1

2200 Westinghouse Boulevard • Suite 105 • Raleigh, NC 27604 • Phone (919) 876-0405 • Fax (919) 876-0460

PERMEABILITY TEST

ASTM D 5084-90(Reapproved 1997)
(SOP-S22A & S22B)

geotechnics
INTEGRITY IN TESTING

Client	CH2M HILL	Boring No.	MW-05
Client Project	MCP CAMP LEJEUNE O. UNIT No.	Depth (ft.)	6.5-7.0'
Project No.	2006-521-01	Sample No.	NA
Lab ID No.	2006-521-01-01		

Pressure Heads (Constant)		Final Sample Dimensions	
Top Cap (psi)	38.5	Sample Length (cm), L	7.49
Bottom Cap (psi)	40.0	Sample Diameter (cm)	7.27
Cell (psi)	45.0	Sample Area (cm^2), A	41.48
Total Pressure Head (cm)	105.5	Inflow Burette Area (cm^2), a-in	0.888
Hydraulic Gradient	14.09	Outflow Burette Area (cm^2), a-out	0.892
		B Parameter (%)	97

AVERAGE PERMEABILITY = 1.1E-05 cm/sec @ 20°C
AVERAGE PERMEABILITY = 1.1E-07 m/sec @ 20°C

DATE (mm/dd/yy)	TIME (hr)	TIME (min)	ELAPSED TIME t (hr)	TOTAL INFLOW (cm^3)	TOTAL OUTFLOW (cm^3)	TOTAL HEAD h (cm)	FLOW (0 flow) (1 stop)	TEMP. (°C)	INCREMENTAL PERMEABILITY @ 20°C (cm/sec)
02/28/06	11	55	0.0	2.2	22.9	128.9	0	21.1	NA
02/28/06	11	58	0.1	3.7	21.4	125.5	0	21.1	1.1E-05
02/28/06	12	0	0.1	4.6	20.5	123.5	0	21.1	1.1E-05
02/28/06	12	2	0.1	5.5	19.6	121.5	0	21.2	1.1E-05
02/28/06	12	4	0.2	6.4	18.7	119.5	0	21.2	1.1E-05
02/28/06	12	19	0.4	12.9	12.1	104.8	0	21.2	1.1E-05
02/28/06	12	21	0.4	13.6	11.4	103.2	1	21.2	9.8E-06

Tested By: MCW Date: 02/27/06 Checked By: AHF Date: 3-2-06

DCN: CT-22 DATE: 01-08-99 REVISION:2 C:\2006 PROJECTS\2006-521 CH2M HILL\[2006-521-01-01 PERM.xls]Sheet1

2200 Westinghouse Boulevard • Suite 105 • Raleigh, NC 27604 • Phone (919) 876-0405 • Fax (919) 876-0460

geotechnics
INTEGRITY IN TESTING

SPECIFIC GRAVITY

ASTM D 854-00 (SOP - S5)

Client	CH2M HILL	Boring No.	MW-05
Client Reference	MCP CAMP LEJEUNE O. UNIT NO. 22 SITE	Depth (ft)	6.5-7.0'
Project No.	2006-521-01	Sample No.	NA
Lab ID	2006-521-01-01	Visual Description	**LIGHT GRAY**
			(MInus No.4 sieve material, airdried)

Replicate Number	**1**	**2**
Pycnometer ID	R 241	R 242
Weight of Pycnometer + Soil + Water (gm)	698	701.25
Temperature, T (°Celsius)	22.8	22.8
Weight of Pycnometer + Water (gm)	667.38	670.61
Tare Number	209	212
Weight of Tare + Dry Soil (gm)	221.67	221.59
Weight of Tare (gm)	171.76	171.64
Weight of Dry Soil (gm)	49.91	49.95
Specific Gravity of Soil @ T	2.587	2.587
Specific Gravity of Water @ T	0.9976	0.9976
Conversion Factor for Temperature T	0.9994	0.9994
Specific Gravity @ 20° Celsius	2.589	2.589

Average Specific Gravity @ 20° Celsius	2.59

Tested By MCW *Date* 03/01/06 *Checked By* AHF *Date* 3-3-06

DCN: CT-S5 Date: 03/24/05 Revision: 10R *C:\2006 PROJECTS\2006-521 CH2M HILL\[2006-521-01-01 SPECIFIC GRAVITY.xls]Sheet1*

2200 Westinghouse Boulevard • Suite 105 • Raleigh, NC 27604 • Phone (919) 876-0405 • Fax (919) 876-0460

geotechnics
INTEGRITY IN TESTING

SIEVE ANALYSIS
ASTM D 422-63 (SOP-S3)

Client	CH2M HILL	Boring No.	MW-05
Client Reference	MCP CAMP LEJEUNE O. UNIT NO. 22	Depth (ft)	7'
Project No.	2006-521-01	Sample No.	NA
Lab ID	2006-521-01-01	Soil Color	**LIGHT GRAY**

	SIEVE ANALYSIS		*HYDROMETER*
USCS	**gravel**	**sand**	**silt and clay**

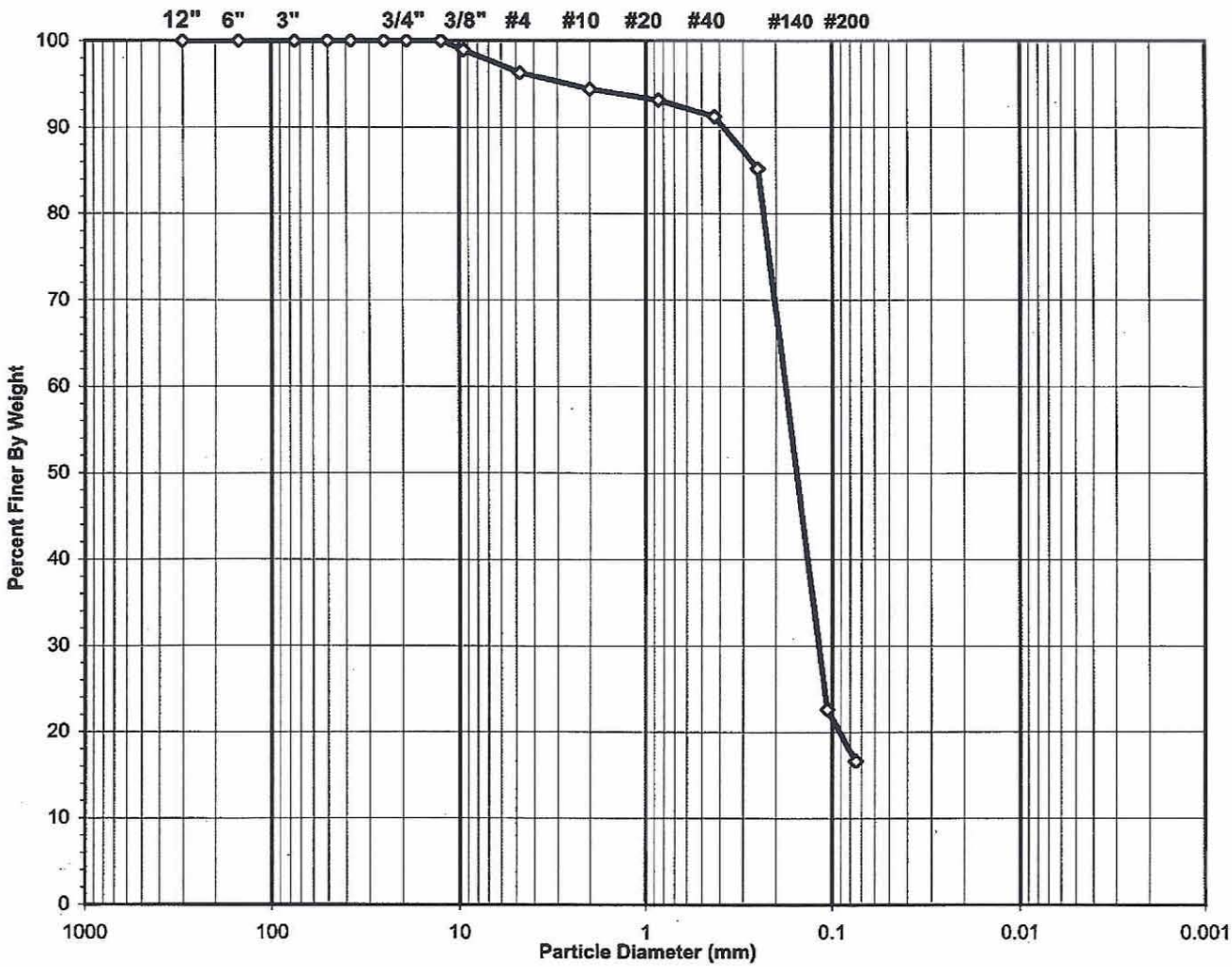

USCS Symbol ***sm, ASSUMED***

USCS Classification ***SILTY SAND***

Tested By MCW Date 03/01/06 Checked By AHF Date 3-3-06

 DCN: CT-S3C DATE 6-25-98 REVISION: 2 *C:\2006 PROJECTS\2006-521 CH2M HILL\[2006-521-01-01 SIEVE.XLS]Sheet1*

2200 Westinghouse Boulevard • Suite 105 • Raleigh, NC 27604 • Phone (919) 876-0405 • Fax (919) 876-0460

geotechnics
INTEGRITY IN TESTING

WASH SIEVE ANALYSIS

ASTM D 422-63 (SOP-S3)

Client	CH2M HILL	Boring No.	MW-05
Client Reference	MCP CAMP LEJEUNE O. UNIT NO. 22	Depth (ft)	7'
Project No.	2006-521-01	Sample No.	NA
Lab ID	2006-521-01-01	Soil Color	**LIGHT GRAY**

Moisture Content of Passing 3/4" Material		Water Content of Retained 3/4" Material	
Tare No.	216	Tare No.	NA
Wgt.Tare + Wet Specimen (gm)	531.50	Wgt.Tare + Wet Specimen (gm)	NA
Wgt.Tare + Dry Specimen (gm)	475.05	Wgt.Tare + Dry Specimen (gm)	NA
Weight of Tare (gm)	170.84	Weight of Tare (gm)	NA
Weight of Water (gm)	56.45	Weight of Water (gm)	NA
Weight of Dry Soil (gm)	304.21	Weight of Dry Soil (gm)	NA
Moisture Content (%)	**18.6**	**Moisture Content (%)**	**NA**

Wet Weight -3/4" Sample (gm)	NA	Weight of the Dry Specimen (gm)	304.21
Dry Weight - 3/4" Sample (gm)	253.7	Weight of minus #200 material (gm)	50.54
Wet Weight +3/4" Sample (gm)	NA	Weight of plus #200 material (gm)	253.67
Dry Weight + 3/4" Sample (gm)	0.00		
Total Dry Weight Sample (gm)	NA		

Sieve Size	Sieve Opening (mm)	Wgt.of Soil Retained (gm)	Percent Retained (%)	Accumulated Percent Retained (%)	Percent Finer (%)	**Accumulated Percent Finer (%)**
12"	300	0.00	0.0	0.0	100.0	**100.0**
6"	150	0.00	0.0	0.0	100.0	**100.0**
3"	75	0.00	0.0	0.0	100.0	**100.0**
2"	50	0.00	0.0	0.0	100.0	**100.0**
1 1/2"	37.5	0.00	0.0	0.0	100.0	**100.0**
1"	25.0	0.00	0.0	0.0	100.0	**100.0**
3/4"	19.0	0.00	0.0	0.0	100.0	**100.0**
1/2"	12.50	0.00	0.0	0.0	100.0	**100.0**
3/8"	9.50	3.31	1.1	1.1	98.9	**98.9**
#4	4.75	7.96	2.6	3.7	96.3	**96.3**
#10	2.00	5.75	1.9	5.6	94.4	**94.4**
#20	0.850	3.80	1.2	6.8	93.2	**93.2**
#40	0.425	5.91	1.9	8.8	91.2	**91.2**
#60	0.250	18.24	6.0	14.8	85.2	**85.2**
#140	0.106	190.65	62.7	77.5	22.5	**22.5**
#200	0.075	18.05	5.9	83.4	16.6	**16.6**
Pan	-	50.54	16.6	100.0	-	-

Tested By MCW Date 03/01/06 Checked By AHF Date 3-3-06

DCN: CT-S3C DATE 6-25-98 REVISION: 2

C:\2006 PROJECTS\2006-521 CH2M HILL\[2006-521-01-01 SIEVE.XLS]Sheet1

2200 Westinghouse Boulevard • Suite 105 • Raleigh, NC 27604 • Phone (919) 876-0405 • Fax (919) 876-0460

PERMEABILITY TEST

ASTM D 5084-90(Reapproved 1997)
(SOP-S22A & S22B)

geotechnics
INTEGRITY IN TESTING

Client	CH2M HILL	Boring No.	MW-01
Client Project	MCP CAMP LEJEUNE O. UNIT No.2	Depth (ft.)	12.5-13'
Project No.	2006-521-01	Sample No.	NA
Lab ID No.	2006-521-01-02		

AVERAGE PERMEABILITY = 5.2E-05 cm/sec @ 20°C
AVERAGE PERMEABILITY = 5.2E-07 m/sec @ 20°C

TOTAL FLOW vs. ELAPSED TIME

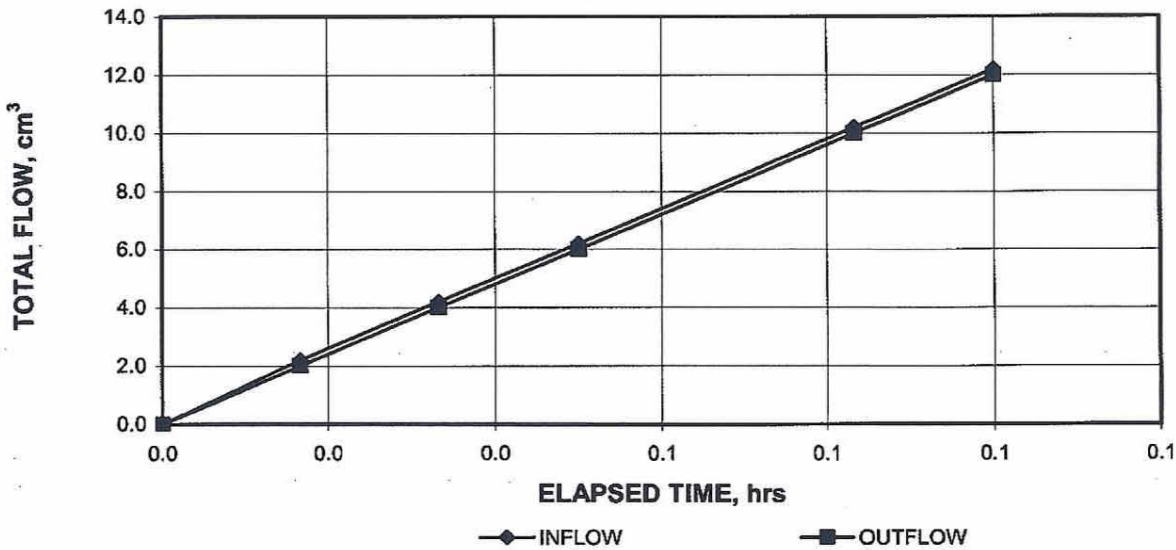

PORE VOLUMES EXCHANGED vs. PERMEABILITY

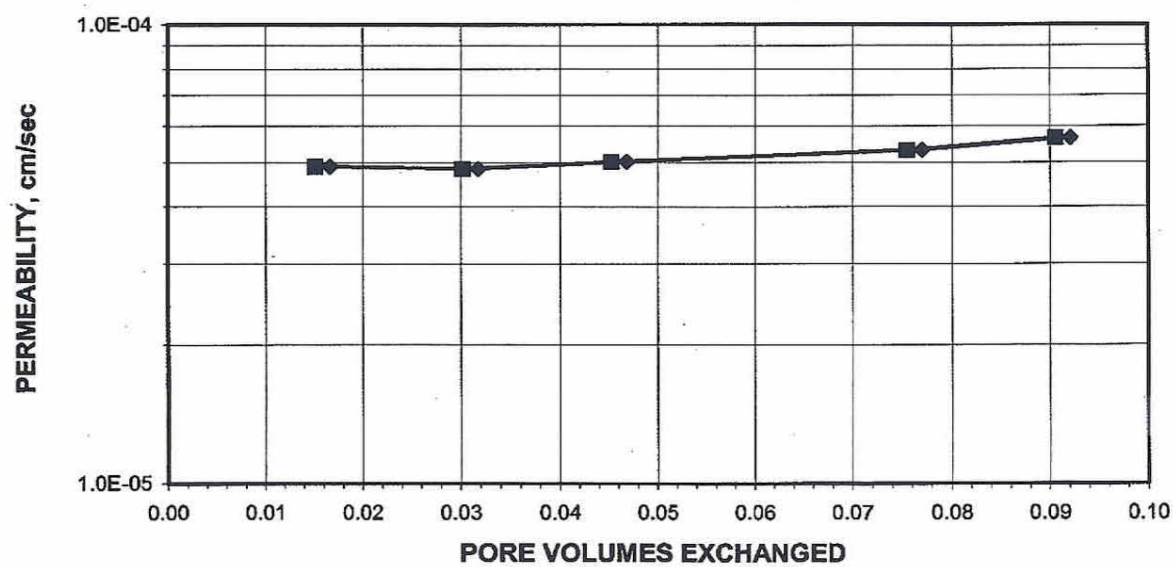

Tested By: MCW Date: 02/28/06 Checked By: AHF Date: 03-02-06

DCN: CT-22 DATE: 01-08-99 REVISION:2C:\2006 PROJECTS\2006-521 CH2M HILL\[2006-521-01-02 PERM.xls]Sheet1

2200 Westinghouse Boulevard • Suite 105 • Raleigh, NC 27604 • Phone (919) 876-0405 • Fax (919) 876-0460

PERMEABILITY TEST

ASTM D 5084-90(Reapproved 1997)
(SOP-S22A & S22B)

geotechnics
INTEGRITY IN TESTING

Client	CH2M HILL	Boring No.	MW-01
Client Project	MCP CAMP LEJEUNE O. UNIT No.22 SITE 95	Depth (ft.)	12.5-13'
Project No.	2006-521-01	Sample No.	NA
Lab ID No.	2006-521-01-02		
		Specific Gravity	2.60 Measured
		Sample Condition	Remolded

Visual Description: LIGHT GRAYISH BROWN SAND

MOISTURE CONTENT:	BEFORE TEST	AFTER TEST
Tare Number	301	314
Wt. of Tare & WS (gm.)	261.68	723.24
Wt. of Tare & DS (gm.)	215.42	589.47
Wt. of Tare (gm.)	83.91	84.52
Wt. of Water (gm.)	46.26	133.77
Wt. of DS (gm.)	131.51	504.95
Moisture Content (%)	**35.2**	**26.5**

SPECIMEN:	BEFORE TEST	AFTER TEST
Wt. of Tube & WS (gm.)	654.73	NA
Wt. of Tube (gm.)	0.00	NA
Wt. of WS (gm.)	654.73	612.67
Length 1 (in.)	3.133	3.006
Length 2 (in.)	3.109	3.033
Length 3 (in.)	3.165	3.028
Top Diameter (in.)	2.848	2.859
Middle Diameter (in.)	2.872	2.859
Bottom Diameter (in.)	2.830	2.870
Average Length (in.)	3.14	3.02
Average Area (in.^{2})	6.38	6.44
Sample Volume (cm^3)	327.80	318.77
Unit Wet Wt. (gm./ cm^3)	2.00	1.92
Unit Wet Wt. (pcf)	124.7	120.0
Unit Dry Wt. (pcf)	92.2	94.8
Unit Dry Wt. (gm./ cm^3)	1.48	1.52
Void Ratio, e	0.76	0.71
Porosity, n	0.43	0.42
Pore Volume (cm^3)	141.5	132.5

Tested By: MCW Date: 2/28/2006 Checked By: AHF Date: 3-2-06

DCN: CT-22 DATE: 01-08-99 REVISION:2 \\Lab1\c\2006 PROJECTS\2006-521 CH2M HILL\[2006-521-01-02 PERM.xls]Sheet1

2200 Westinghouse Boulevard • Suite 105 • Raleigh, NC 27604 • Phone (919) 876-0405 • Fax (919) 876-0460

PERMEABILITY TEST

ASTM D 5084-90(Reapproved 1997)
(SOP-S22A & S22B)

geotechnics
INTEGRITY IN TESTING

Client	CH2M HILL	Boring No.	MW-01
Client Project	MCP CAMP LEJEUNE O. UNIT No.	Depth (ft.)	12.5-13'
Project No.	2006-521-01	Sample No.	NA
Lab ID No.	2006-521-01-02		

Pressure Heads (Constant)		Final Sample Dimensions	
Top Cap (psi)	38.5	Sample Length (cm), L	7.68
Bottom Cap (psi)	40.0	Sample Diameter (cm)	7.27
Cell (psi)	45.0	Sample Area (cm^2), A	41.52
Total Pressure Head (cm)	105.5	Inflow Burette Area (cm^2), a-in	0.882
Hydraulic Gradient	13.74	Outflow Burette Area (cm^2), a-out	0.880
		B Parameter (%)	97

AVERAGE PERMEABILITY = 5.2E-05 cm/sec @ 20°C
AVERAGE PERMEABILITY = 5.2E-07 m/sec @ 20°C

DATE (mm/dd/yy)	TIME (hr)	TIME (min)	ELAPSED TIME t (hr)	TOTAL INFLOW (cm^3)	TOTAL OUTFLOW (cm^3)	TOTAL HEAD h (cm)	FLOW (0 flow) (1 stop)	TEMP. (°C)	INCREMENTAL PERMEABILITY @ 20°C (cm/sec)
02/28/06	10	29	0.0	0.8	23.5	131.1	0	21.0	NA
02/28/06	10	30	0.0	3.0	21.5	126.4	0	21.0	4.9E-05
02/28/06	10	31	0.0	5.0	19.5	121.9	0	21.0	4.8E-05
02/28/06	10	32	0.1	7.0	17.5	117.3	0	21.0	5.0E-05
02/28/06	10	34	0.1	11.0	13.5	108.3	0	21.0	5.3E-05
02/28/06	10	35	0.1	13.0	11.5	103.8	1	21.0	5.7E-05

Tested By: MCW Date: 02/28/06 Checked By: AHF Date: 03-02-06

DCN: CT-22 DATE: 01-08-99 REVISION:2 C:\2006 PROJECTS\2006-521 CH2M HILL\[2006-521-01-02 PERM.xls]Sheet1

2200 Westinghouse Boulevard • Suite 105 • Raleigh, NC 27604 • Phone (919) 876-0405 • Fax (919) 876-0460

geotechnics
INTEGRITY IN TESTING

SPECIFIC GRAVITY

ASTM D 854-00 (SOP - S5)

Client	CH2M HILL	Boring No.	MW-01
Client Reference	MCP CAMP LEJEUNE O. UNIT NO. 22 SITE	Depth (ft)	12.5-13'
Project No.	2006-521-01	Sample No.	NA
Lab ID	2006-521-01-02	Visual Description	**LIGHT GRAY**
			(MInus No.4 sieve material, airdried)

Replicate Number	**1**	**2**
Pycnometer ID	R 241	R 242
Weight of Pycnometer + Soil + Water (gm)	698.24	701.18
Temperature, T (°Celsius)	23.0	23.0
Weight of Pycnometer + Water (gm)	667.36	670.58
Tare Number	213	P-12
Weight of Tare + Dry Soil (gm)	223.33	246.57
Weight of Tare (gm)	173.34	196.62
Weight of Dry Soil (gm)	49.99	49.95
Specific Gravity of Soil @ T	2.616	2.581
Specific Gravity of Water @ T	0.9976	0.9976
Conversion Factor for Temperature T	0.9994	0.9994
Specific Gravity @ 20° Celsius	2.618	2.583

Average Specific Gravity @ 20° Celsius	2.60

Tested By MCW *Date* 03/01/06 *Checked By* AHF *Date* 3-2-06

DCN: CT-S5 Date: 03/24/05 Revision: 10R *C:\Data Sheets\[Specific Gravity Soils 1Raleigh.xls]Sheet1*

2200 Westinghouse Boulevard • Suite 105 • Raleigh, NC 27604 • Phone (919) 876-0405 • Fax (919) 876-0460

geotechnics
INTEGRITY IN TESTING

SIEVE ANALYSIS
ASTM D 422-63 (SOP-S3)

Client	CH2M HILL	Boring No.	NA
Client Reference	MCP CAMP LEJEUNE O. UNIT NO. 22	Depth (ft)	12.2-12.5
Project No.	2006-521-01	Sample No.	NA
Lab ID	2006-521-01-02	Soil Color	LIGHT GRAYISH BROWN

USCS	SIEVE ANALYSIS		HYDROMETER
	gravel	sand	silt and clay

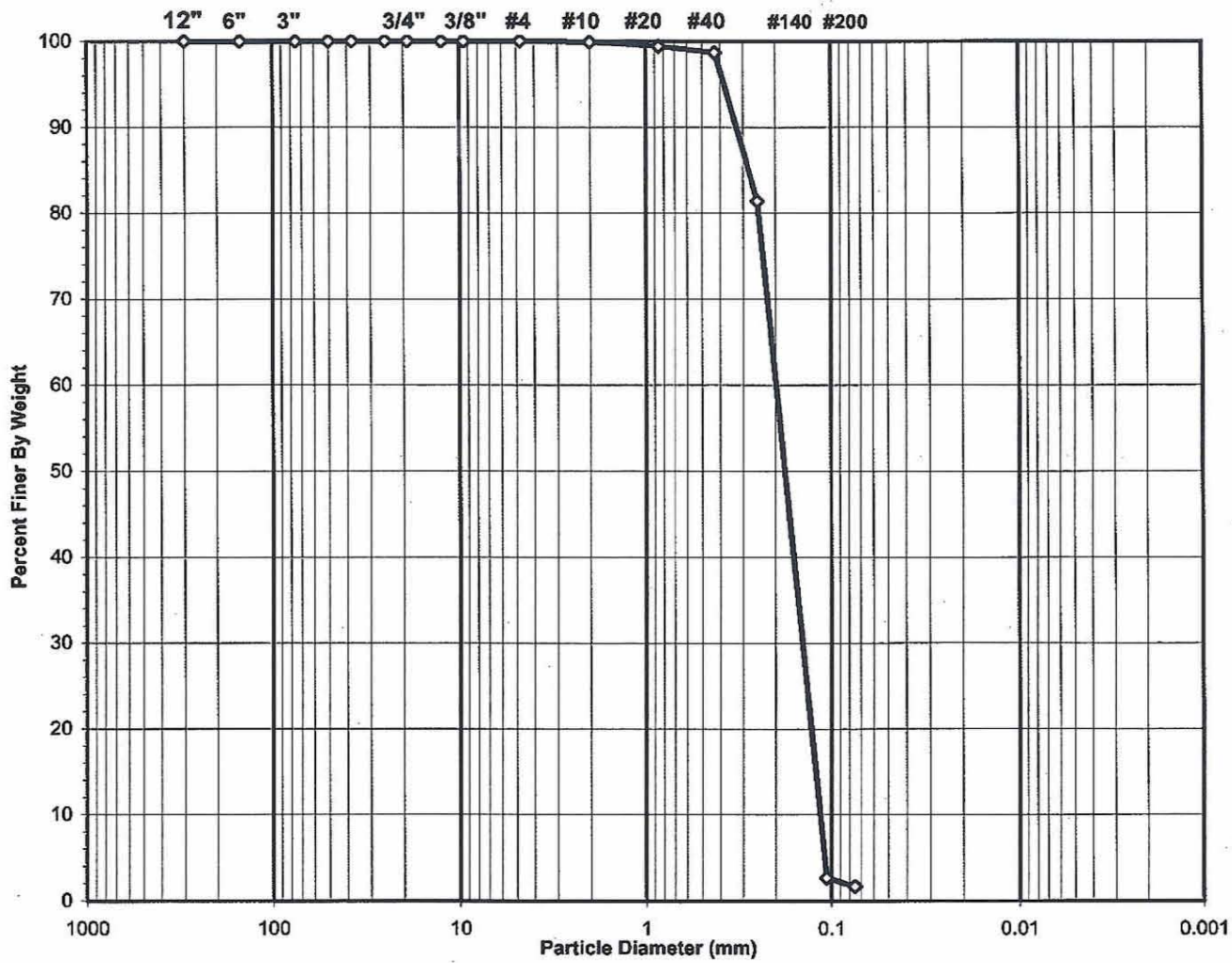

USCS Symbol	*sp, ASSUMED*	D60 =	0.2	CC =	0.9
USCS Classification	*POORLY GRADED SAND*	D30 =	0.1	CU =	1.7
		D10 =	0.1		

Tested By MCW Date 02/27/06 Checked By AHF Date 3-3-06

 DCN: CT-S3C DATE 6-25-98 REVISION: 2 *C:\2006 PROJECTS\2006-521 CH2M HILL\[2006-521-01-02 SIEVE.XLS]Sheet1*

2200 Westinghouse Boulevard • Suite 105 • Raleigh, NC 27604 • Phone (919) 876-0405 • Fax (919) 876-0460

geotechnics
INTEGRITY IN TESTING

WASH SIEVE ANALYSIS

ASTM D 422-63 (SOP-S3)

Client	CH2M HILL	Boring No.	NA
Client Reference	MCP CAMP LEJEUNE O. UNIT NO. 22	Depth (ft)	12.2-12.5
Project No.	2006-521-01	Sample No.	NA
Lab ID	2006-521-01-02	Soil Color	LIGHT GRAYISH BROWN

Moisture Content of Passing 3/4" Material		Water Content of Retained 3/4" Material	
Tare No.	217	Tare No.	NA
Wgt.Tare + Wet Specimen (gm)	807.04	Wgt.Tare + Wet Specimen (gm)	NA
Wgt.Tare + Dry Specimen (gm)	680.07	Wgt.Tare + Dry Specimen (gm)	NA
Weight of Tare (gm)	171.12	Weight of Tare (gm)	NA
Weight of Water (gm)	126.97	Weight of Water (gm)	NA
Weight of Dry Soil (gm)	508.95	Weight of Dry Soil (gm)	NA
Moisture Content (%)	**24.9**	**Moisture Content (%)**	**NA**

Wet Weight -3/4" Sample (gm)	NA	Weight of the Dry Specimen (gm)	508.95
Dry Weight - 3/4" Sample (gm)	500.5	Weight of minus #200 material (gm)	8.47
Wet Weight +3/4" Sample (gm)	NA	Weight of plus #200 material (gm)	500.48
Dry Weight + 3/4" Sample (gm)	0.00		
Total Dry Weight Sample (gm)	NA		

Sieve Size	Sieve Opening (mm)	Wgt.of Soil Retained (gm)	Percent Retained (%)	Accumulated Percent Retained (%)	Percent Finer (%)	Accumulated Percent Finer (%)
12"	300	0.00	0.0	0.0	100.0	**100.0**
6"	150	0.00	0.0	0.0	100.0	**100.0**
3"	75	0.00	0.0	0.0	100.0	**100.0**
2"	50	0.00	0.0	0.0	100.0	**100.0**
1 1/2"	37.5	0.00	0.0	0.0	100.0	**100.0**
1"	25.0	0.00	0.0	0.0	100.0	**100.0**
3/4"	19.0	0.00	0.0	0.0	100.0	**100.0**
1/2"	12.50	0.00	0.0	0.0	100.0	**100.0**
3/8"	9.50	0.00	0.0	0.0	100.0	**100.0**
#4	4.75	0.00	0.0	0.0	100.0	**100.0**
#10	2.00	0.45	0.1	0.1	99.9	**99.9**
#20	0.850	2.63	0.5	0.6	99.4	**99.4**
#40	0.425	3.80	0.7	1.4	98.6	**98.6**
#60	0.250	88.12	17.3	18.7	81.3	**81.3**
#140	0.106	400.40	78.7	97.3	2.7	**2.7**
#200	0.075	5.08	1.0	98.3	1.7	**1.7**
Pan	-	8.47	1.7	100.0	-	-

Tested By MCW Date 02/27/06 Checked By AHF Date 3-3-06

DCN: CT-S3C DATE 6-25-98 REVISION: 2

C:\2006 PROJECTS\2006-521 CH2M HILL\[2006-521-01-02 SIEVE.XLS]Sheet1

2200 Westinghouse Boulevard • Suite 105 • Raleigh, NC 27604 • Phone (919) 876-0405 • Fax (919) 876-0460

PERMEABILITY TEST

ASTM D 5084-90(Reapproved 1997)
(SOP-S22A & S22B)

geotechnics
INTEGRITY IN TESTING

Client	CH2M HILL	Boring No.	IR95 MR MW02
Client Project	MCP CAMP LEJEUNE O. UNIT NO.22	Depth (ft.)	11.9-12.2
Project No.	2006-521-02	Sample No.	7/12/06
Lab ID No.	2006-521-02-01		

AVERAGE PERMEABILITY = 1.2E-04 cm/sec @ 20°C
AVERAGE PERMEABILITY = 1.2E-06 m/sec @ 20°C

TOTAL FLOW vs. ELAPSED TIME

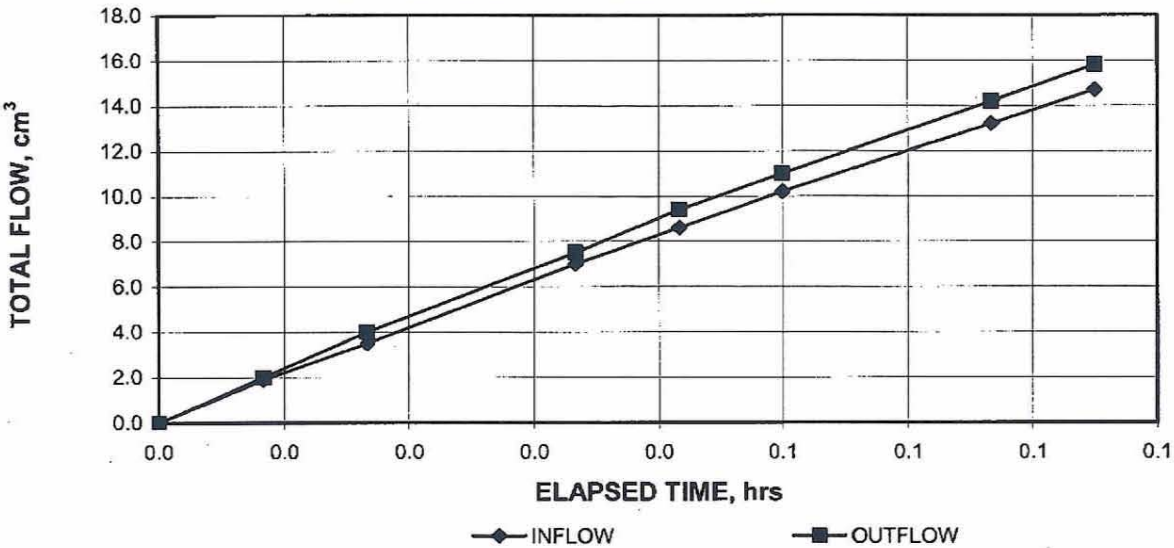

PORE VOLUMES EXCHANGED vs. PERMEABILITY

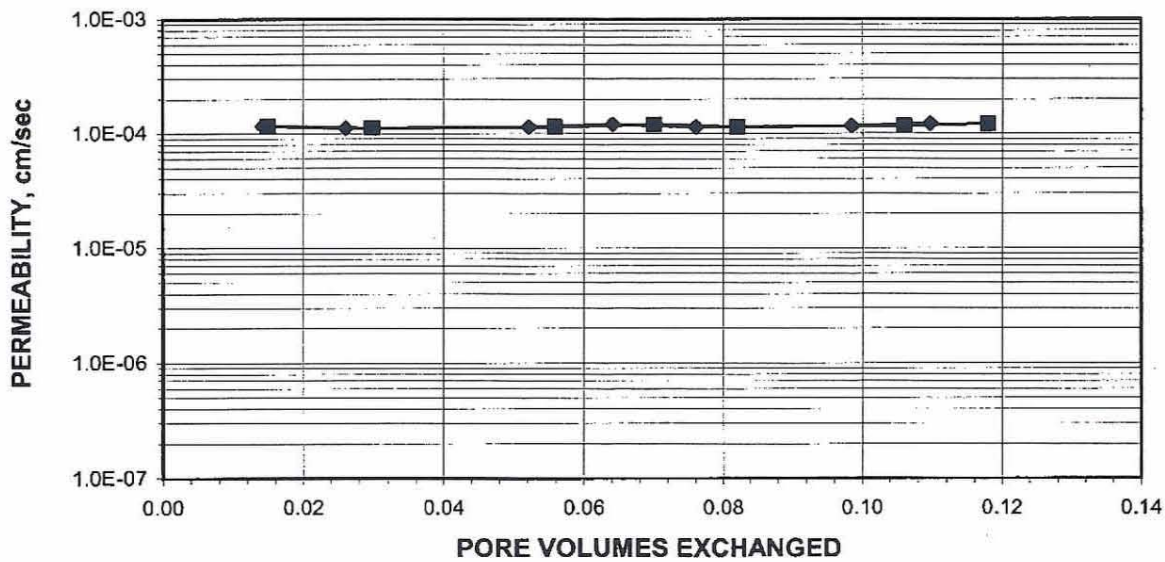

Tested By: MCW Date: 7/27/2006 Checked By: GEM Date: 7-31-06

DCN: CT-22 DATE: 01-08-99 REVISION: 2 \\c\2006 PROJECTS\2006-521 CH2M HILL\[2006-521-02-01 PERM.xls]Sheet1

2200 Westinghouse Boulevard • Suite 105 • Raleigh, NC 27604 • Phone (919) 876-0405 • Fax (919) 876-0460

PERMEABILITY TEST

ASTM D 5084-90(Reapproved 1997)
(SOP-S22A & S22B)

geotechnics
INTEGRITY IN TESTIN

Client	CH2M HILL	Boring No.	IR95 MR MW02
Client Project	MCP CAMP LEJEUNE O. UNIT NO.22	Depth (ft.)	11.9-12.2
Project No.	2006-521-02	Sample No.	7/12/06
Lab ID No.	2006-521-02-01		
		Specific Gravity	2.67 Measured
		Sample Condition	Undisturbed

Visual Description: LIGHT GRAY TAN SILTY SAND

MOISTURE CONTENT:	BEFORE TEST	AFTER TEST
Tare Number	200	309
Wt. of Tare & WS (gm.)	518.87	880.30
Wt. of Tare & DS (gm.)	448.00	729.66
Wt. of Tare (gm.)	171.83	109.37
Wt. of Water (gm.)	70.87	150.64
Wt. of DS (gm.)	276.17	620.29
Moisture Content (%)	**25.7**	**24.3**

SPECIMEN:	BEFORE TEST	AFTER TEST
Wt. of Tube & WS (gm.)	1027.34	NA
Wt. of Tube (gm.)	255.69	NA
Wt. of WS (gm.)	771.65	763.20
Length 1 (in.)	3.716	3.646
Length 2 (in.)	3.710	3.544
Length 3 (in.)	3.715	3.642
Top Diameter (in.)	2.851	2.817
Middle Diameter (in.)	2.881	2.821
Bottom Diameter (in.)	2.861	2.758
Average Length (in.)	3.71	3.61
Average Area (in.^{2})	6.44	6.15
Sample Volume (cm^3)	392.14	363.98
Unit Wet Wt. (gm./ cm^3)	1.97	2.10
Unit Wet Wt. (pcf)	122.8	130.9
Unit Dry Wt. (pcf)	97.7	105.3
Unit Dry Wt. (gm./ cm^3)	1.57	1.69
Void Ratio, e	0.71	0.58
Porosity, n	0.41	0.37
Pore Volume (cm^3)	162.2	134.0

Tested By: MCW Date: 7/27/2006 Checked By: GCM Date: 7-31-06

DCN: CT-22 DATE: 01-08-99 REVISION:2 \\Lab1\c\2006 PROJECTS\2006-521 CH2M HILL\[2006-521-02-01 PERM.xls]Sheet1

2200 Westinghouse Boulevard • Suite 105 • Raleigh, NC 27604 • Phone (919) 876-0405 • Fax (919) 876-0460

PERMEABILITY TEST

ASTM D 5084-90(Reapproved 1997)
(SOP-S22A & S22B)

geotechnics
INTEGRITY IN TESTING

Client	CH2M HILL	Boring No.	IR95 MR MW02
Client Project	MCP CAMP LEJEUNE O. UNIT NO.22	Depth (ft.)	11.9-12.2
Project No.	2006-521-02	Sample No.	7/12/06
Lab ID No.	2006-521-02-01		

Pressure Heads (Constant)		Final Sample Dimensions	
Top Cap (psi)	38.5	Sample Length (cm), L	9.17
Bottom Cap (psi)	40.0	Sample Diameter (cm)	7.11
Cell (psi)	48.0	Sample Area (cm^2), A	39.69
Total Pressure Head (cm)	105.5	Inflow Burette Area (cm^2), a-in	0.965
Hydraulic Gradient	11.50	Outflow Burette Area (cm^2), a-out	0.899
		B Parameter (%)	99

AVERAGE PERMEABILITY = 1.2E-04 cm/sec @ 20°C
AVERAGE PERMEABILITY = 1.2E-06 m/sec @ 20°C

DATE (mm/dd/yy)	TIME (hr)	(min)	ELAPSED TIME t (hr)	TOTAL INFLOW (cm^3)	TOTAL OUTFLOW (cm^3)	TOTAL HEAD h (cm)	FLOW (0 flow) (1 stop)	TEMP. (°C)	INCREMENTAL PERMEABILITY @ 20°C (cm/sec)
7/27/2006	11	45	0.0	0.0	0.0	122.5	0	22.5	NA
7/27/2006	11	45.5	0.0	1.9	2.0	118.4	0	22.5	1.2E-04
7/27/2006	11	46	0.0	3.5	4.0	114.5	0	22.5	1.1E-04
7/27/2006	11	47	0.0	7.0	7.5	107.1	0	22.5	1.1E-04
7/27/2006	11	47.5	0.0	8.6	9.4	103.3	0	22.5	1.2E-04
7/27/2006	11	48	0.1	10.2	11.0	99.9	0	22.5	1.1E-04
7/27/2006	11	49	0.1	13.2	14.2	93.3	0	22.5	1.2E-04
7/27/2006	11	49.5	0.1	14.7	15.8	90.0	1	22.5	1.2E-04

Tested By: MCW Date: 7/27/2006 Checked By: GZM Date: 7-31-06

DCN: CT-22 DATE: 01-08-99 REVISION:2 \\Lab1\c\2006 PROJECTS\2006-521 CH2M HILL\[2006-521-02-01 PERM.xls]Sheet1

2200 Westinghouse Boulevard • Suite 105 • Raleigh, NC 27604 • Phone (919) 876-0405 • Fax (919) 876-0460

Geotechnics

.....GEOTECHNICAL, GEOENVIRONMENTAL, AND GEOSYNTHETIC LABORATORIES

July 31, 2006

Project No. 2006-521-02

Mr. Rick Powell
CH2M Hill
4824 Parkway Plaza Blvd. Suite 200
Charlotte, NC 28217

Transmittal
Laboratory Test Results
MCP Camp Lejeune O. Unit No.22

Please find attached the laboratory test results for the above referenced project. The tests were outlined on the Project Verification Form that was faxed to your firm prior to the testing. The testing was performed in general accordance with the methods listed on the enclosed data sheets. The test results are believed to be representative of the samples that were submitted for testing and are indicative only of the specimens which were evaluated. We have no direct knowledge of the origin of the samples and imply no position with regard to the nature of the test results, i.e. pass/fail and no claims as to the suitability of the material for its intended use.

The test data and all associated project information provided shall be held in strict confidence and disclosed to other parties only with authorization by our Client. The test data submitted herein is considered integral with this report and is not to be reproduced except in whole and only with the authorization of the Client and Geotechnics. The remaining sample materials for this project will be retained for a minimum of 90 days as directed by the Geotechnics' Quality Program.

We are pleased to provide these testing services. Should you have any questions or if we may be of further assistance, please contact our office.

Respectively submitted,
Geotechnics, Inc.

Michael P. Smith
Regional Manager

We understand that you have a choice in your laboratory services and we thank you for choosing Geotechnics.

DCN: Data Transmittal Letter Date: 1/28/05 Rev.: 1

2200 Westinghouse Boulevard • Suite 105 • Raleigh, NC 27604 • Phone (919) 876-0405 • Fax (919) 876-0460

geotechnics
INTEGRITY IN TESTING

MOISTURE CONTENT

ASTM D 2216 (SOP-S1)

Client	CH2M HILL
Client Reference	MCP CAMP LEJEUNE O. UNIT No.22 SITE
Project No.	2006-521-02

Lab ID	01
Boring No.	IR95 MR MW 02
Depth (ft)	11.2-11.5'
Sample No.	7/12/06
Tare Number	200
Wt. of Tare & WS (gm)	518.87
Wt. of Tare & DS (gm)	448.00
Wt. of Tare (gm)	171.83
Wt. of Water (gm)	70.87
Wt. of DS (gm)	276.17
Water Content (%)	**25.7**

Notes : *NA*

Tested By *SGH* *Date* *7/28/2006* *Checked By* GEM *Date* 7-31-06

2200 Westinghouse Boulevard • Suite 105 • Raleigh, NC 27604 • Phone (919) 876-0405 • Fax (919) 876-0460

geotechnics
INTEGRITY IN TESTIN

SPECIFIC GRAVITY

ASTM D 854-00 (SOP - S5)

Client	CH2M HILL	Boring No.	IR95 MR MW02
Client Reference	MCP CAMP LEJEUNE O. UNIT NO. 22 SITE	Depth (ft)	11.2-11.5'
Project No.	2006-521-02	Sample No.	7/12/06
Lab ID	2006-521-02-01	Visual Description	**LIGHT GRAY TAN**
			(Minus No.4 sieve material, airdried)

Replicate Number	1	2
Pycnometer ID	R 280	R 242
Weight of Pycnometer + Soil + Water (gm)	716.08	700.86
Temperature, T (°Celsius)	25.5	25.6
Weight of Pycnometer + Water (gm)	685.43	670.26
Tare Number	G-5	G-15
Weight of Tare + Dry Soil (gm)	196.68	200.3
Weight of Tare (gm)	147.71	151.26
Weight of Dry Soil (gm)	48.97	49.04
Specific Gravity of Soil @ T	2.673	2.659
Specific Gravity of Water @ T	0.9969	0.9969
Conversion Factor for Temperature T	0.9987	0.9987
Specific Gravity @ 20° Celsius	2.677	2.663

Average Specific Gravity @ 20° Celsius	2.67

Tested By PF *Date* 7/26/2006 *Checked By* GEM *Date* 7-31-06

DCN: CT-S5 Date: 03/24/05 Revision: 10R *\\Lab1\c\2006 PROJECTS\2006-521 CH2M HILL\[2006-521-02-01 SPECIFIC GRAVITY.xls]Sheet1*

2200 Westinghouse Boulevard • Suite 105 • Raleigh, NC 27604 • Phone (919) 876-0405 • Fax (919) 876-0460

geotechnics
INTEGRITY IN TESTING

SIEVE ANALYSIS
ASTM D 422-63 (SOP-S3)

Client	CH2M HILL	Boring No.	IR95 MR MW02
Client Reference	MCP CAMP LEJEUNE O. UNIT NO. 22	Depth (ft)	11.2-11.5'
Project No.	2006-521-02	Sample No.	7/12/06
Lab ID	2006-521-02-01	Soil Color	LIGHT GRAY TAN

	SIEVE ANALYSIS		HYDROMETER
USCS	gravel	sand	silt and clay

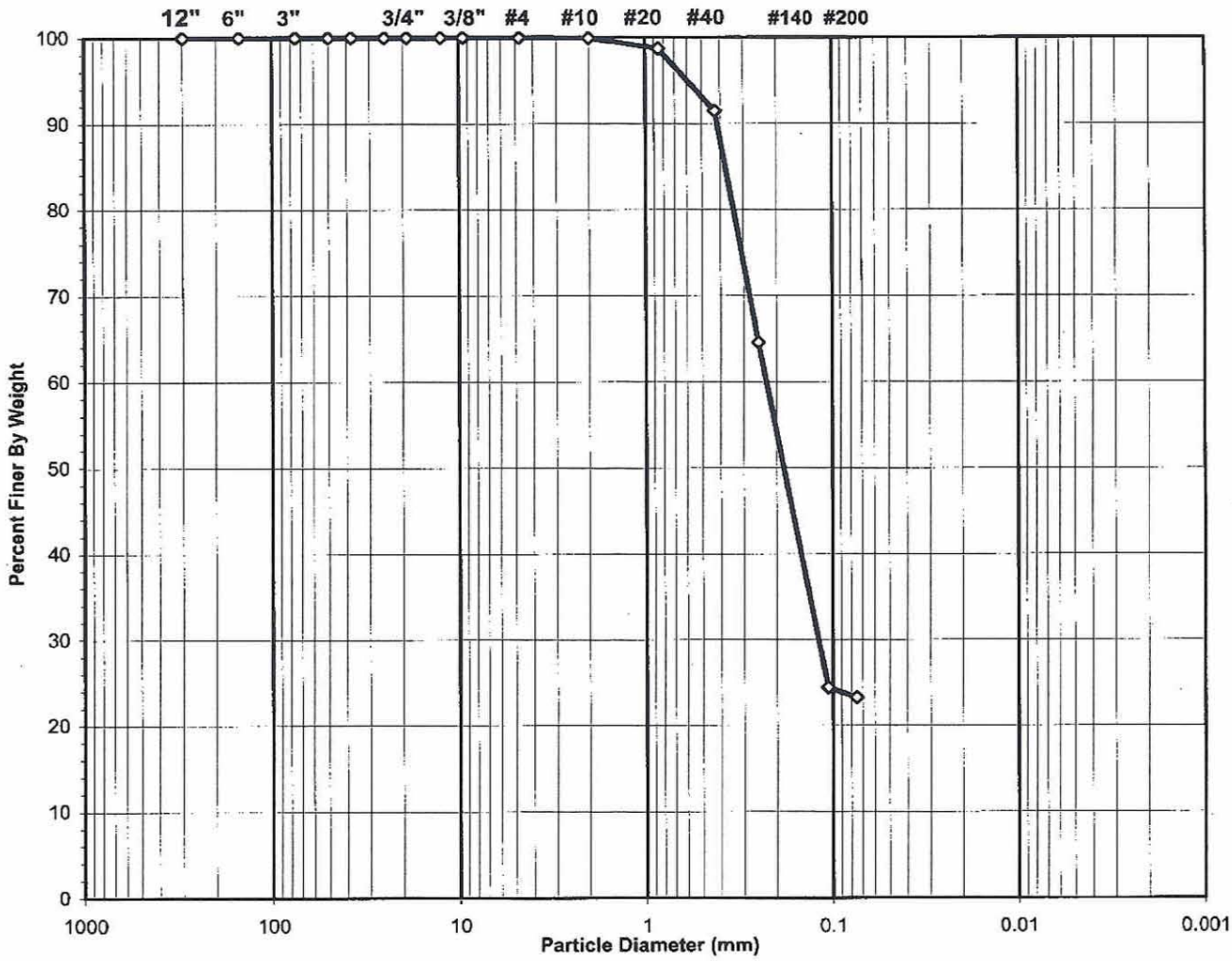

USCS Symbol ***sm, ASSUMED***

USCS Classification ***SILTY SAND***

Tested By MCW Date 7/28/2006 Checked By GEM Date 7-31-06

2200 Westinghouse Boulevard • Suite 105 • Raleigh, NC 27604 • Phone (919) 876-0405 • Fax (919) 876-0460

geotechnics
INTEGRITY IN TESTING

WASH SIEVE ANALYSIS

ASTM D 422-63 (SOP-S3)

Client	CH2M HILL	Boring No.	IR95 MR MW02
Client Reference	MCP CAMP LEJEUNE O. UNIT NO. 22	Depth (ft)	11.2-11.5'
Project No.	2006-521-02	Sample No.	7/12/06
Lab ID	2006-521-02-01	Soil Color	**LIGHT GRAY TAN**

Moisture Content of Passing 3/4" Material		Water Content of Retained 3/4" Material	
Tare No.	200	Tare No.	NA
Wgt.Tare + Wet Specimen (gm)	518.87	Wgt.Tare + Wet Specimen (gm)	NA
Wgt.Tare + Dry Specimen (gm)	448.00	Wgt.Tare + Dry Specimen (gm)	NA
Weight of Tare (gm)	171.83	Weight of Tare (gm)	NA
Weight of Water (gm)	70.87	Weight of Water (gm)	NA
Weight of Dry Soil (gm)	276.17	Weight of Dry Soil (gm)	NA
Moisture Content (%)	**25.7**	**Moisture Content (%)**	**NA**

Wet Weight -3/4" Sample (gm)	NA	Weight of the Dry Specimen (gm)	276.17
Dry Weight - 3/4" Sample (gm)	211.9	Weight of minus #200 material (gm)	64.26
Wet Weight +3/4" Sample (gm)	NA	Weight of plus #200 material (gm)	211.91
Dry Weight + 3/4" Sample (gm)	0.00		
Total Dry Weight Sample (gm)	NA		

Sieve Size	Sieve Opening (mm)	Wgt.of Soil Retained (gm)	Percent Retained (%)	Accumulated Percent Retained (%)	Percent Finer (%)	**Accumulated Percent Finer (%)**
12"	300	0.00	0.0	0.0	100.0	**100.0**
6"	150	0.00	0.0	0.0	100.0	**100.0**
3"	75	0.00	0.0	0.0	100.0	**100.0**
2"	50	0.00	0.0	0.0	100.0	**100.0**
1 1/2"	37.5	0.00	0.0	0.0	100.0	**100.0**
1"	25.0	0.00	0.0	0.0	100.0	**100.0**
3/4"	19.0	0.00	0.0	0.0	100.0	**100.0**
1/2"	12.50	0.00	0.0	0.0	100.0	**100.0**
3/8"	9.50	0.00	0.0	0.0	100.0	**100.0**
#4	4.75	0.00	0.0	0.0	100.0	**100.0**
#10	2.00	0.20	0.1	0.1	99.9	**99.9**
#20	0.850	3.29	1.2	1.3	98.7	**98.7**
#40	0.425	20.05	7.3	8.5	91.5	**91.5**
#60	0.250	74.41	26.9	35.5	64.5	**64.5**
#140	0.106	110.70	40.1	75.6	24.4	**24.4**
#200	0.075	3.26	1.2	76.7	23.3	**23.3**
Pan	-	64.26	23.3	100.0	-	-

Tested By MCW Date 7/28/2006 Checked By GEM Date 7-31-06

2200 Westinghouse Boulevard • Suite 105 • Raleigh, NC 27604 • Phone (919) 876-0405 • Fax (919) 876-0460